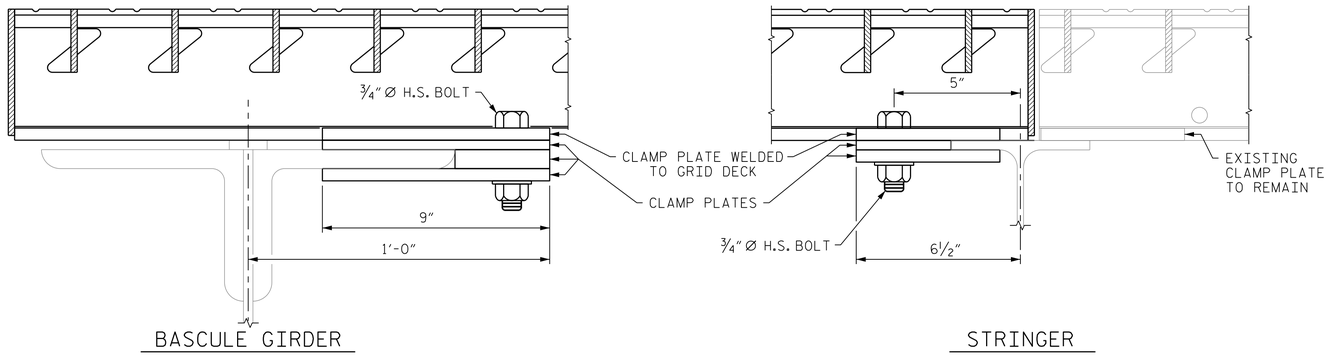

SUGGESTED TEMPORARY CLAMPDOWN PLATE FASTENER

CLAMPS SHOWN ARE OPTIONAL AND ARE TO BE USED AS NECESSARY TO ACCOMMODATE THE CONSTRUCTION SEQUENCE AND BRIDGE OPENINGS

ALTERNATE CLAMP DETAILS MAY BE SUBMITTED TO ENGINEER FOR REVIEW. CLAMP DETAILS, IF USED, SHALL BE SHOWN ON GRID DECK SHOP DRAWINGS.

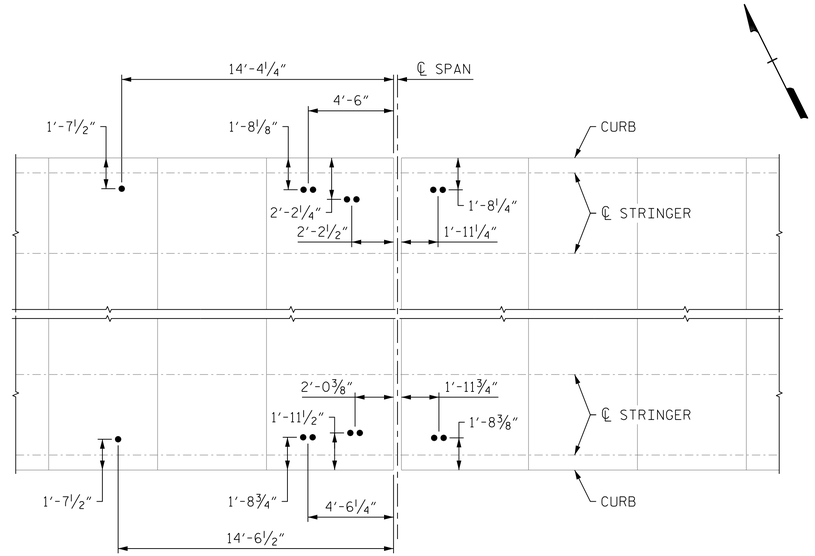

EXISTING GREASE FITTING LOCATIONS

● MARKS LOCATION OF 1 FITTING

ALL DIMENSIONS ARE MEASURED FROM OUTSIDE EDGE OF EXISTING GRID AND CURB.

GREASE FITTINGS IN PAIRS ARE MEASURED TO CENTER OF GROUP.

CONNECTIONS TO BE WELDED TO SUPPLEMENTAL BARS OR CROSS BARS OF GRID DECK, AND SHALL BE GALVANIZED. DETAILS SHOULD BE SIMILAR TO EXISTING CONNECTIONS AND SHALL BE REVIEWED BY THE ENGINEER PRIOR TO COMMENCING THE WORK. SEE SPECIAL PROVISIONS FOR PARTIAL REPLACEMENT OF STEEL GRID DECK.

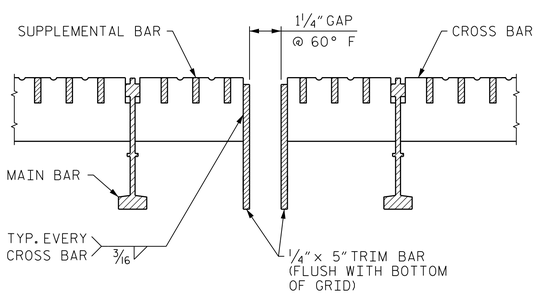

SECTION A-A

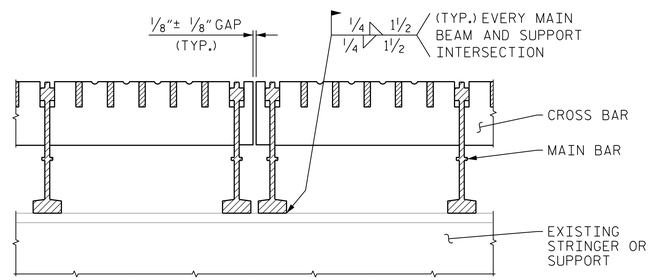

WELDED CONNECTION DETAIL

CONNECTION AT STRINGER SHOWN, CONNECTION AT BASCULE GIRDER SIMILAR

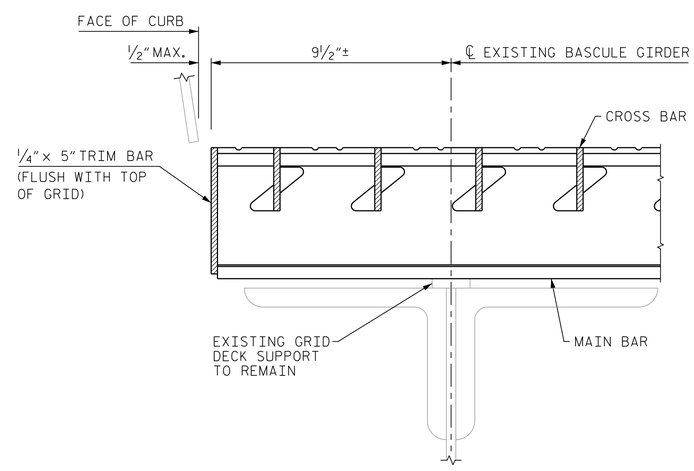

SECTION B-B

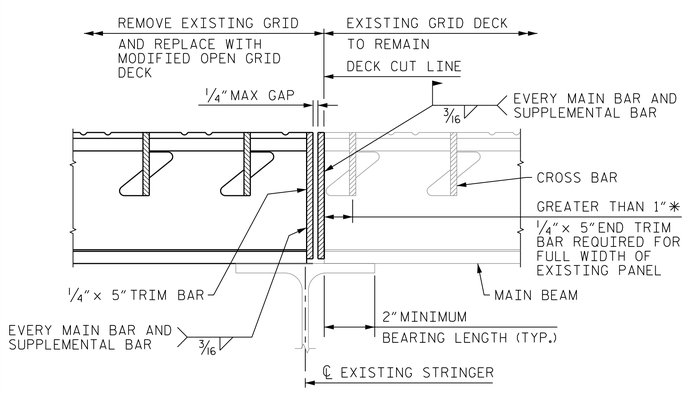

WITH TRIM BAR

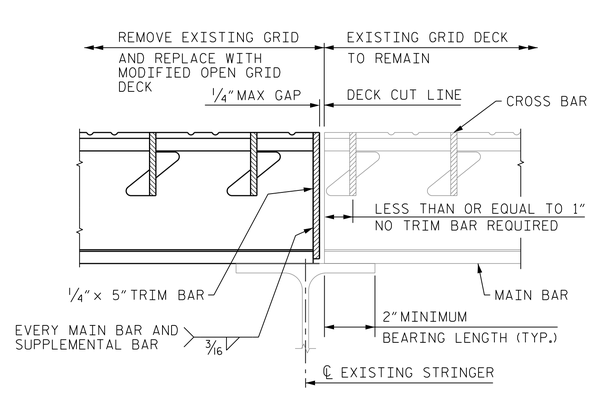

WITHOUT TRIM BAR

SECTION C-C

* IT IS ANTICIPATED THAT (8) EXISTING PANELS WILL REQUIRE A NEW TRIM BAR (1/4" x 5") BE FIELD WELDED TO EXISTING GRID.

AFTER CUT IS MADE, REPLACE WELDED CONNECTION BETWEEN EXISTING GRID DECK AND STRINGER USING WELDED CONNECTION DETAIL ON THIS SHEET.

PROJECT NO. W-5601CK
NEW HANOVER COUNTY
STATION:

SHEET 3 OF 3

STATE OF NORTH CAROLINA
DEPARTMENT OF TRANSPORTATION
RALEIGH

GRID DECK DETAILS

MODJESKI and MASTERS
Experience great bridges.
333 FAYETTEVILLE STREET, SUITE 505
RALEIGH, NC 27601
NC LICENSE NO. C-2979

NORTH CAROLINA PROFESSIONAL SEAL 032967 ENGINEER JASON R. DOUGHTY
6/26/2018
DocuSigned by: Jason R Doughty
5F73FA2DEA974E8...

DOCUMENT NOT CONSIDERED FINAL UNLESS ALL SIGNATURES COMPLETED

REVISIONS						SHEET NO.
NO.	BY:	DATE:	NO.	BY:	DATE:	S-8
1			3			TOTAL SHEETS
2			4			8

DESIGNED BY:	C. CORMAN	DATE :	JUNE 2018
DRAWN BY:	K. WHITE	DATE :	JUNE 2018
CHECKED BY:	B. LOFLIN	DATE :	JUNE 2018
DESIGN ENGINEER OF RECORD:	J. DOUGHTY	DATE :	JUNE 2018

6/26/2018
400.015_W5601CK_SMU_GRD3.640012.dgn