DocuSign Envelope ID: 2DD80076-633F-4FB7-BDAD-4A829D9C40C5

09/08/99

PROJECT: B-5308

CONTRACT: DC00225

See Sheet 1-A For Index of Sheets
See Sheet 1-B For Conventional Symbols

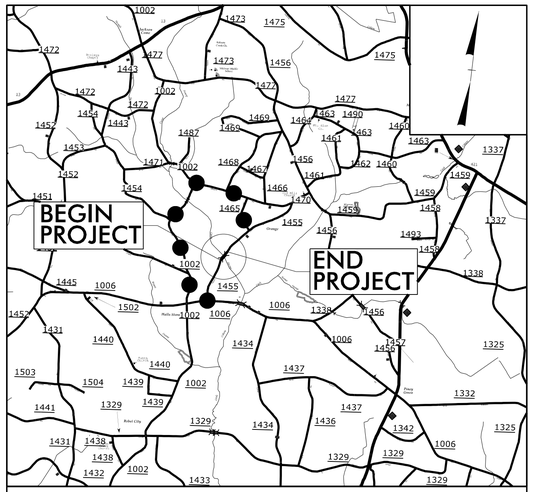

VICINITY MAP

DETOUR ROUTE

N.T.S.

STATE OF NORTH CAROLINA
DIVISION OF HIGHWAYS

SAMPSON COUNTY

LOCATION: REPLACE BRIDGE 152 OVER CAESAR SWAMP ON SR 1455 (PAYTON DANIELS ROAD)

TYPE OF WORK: GRADING, DRAINAGE, PAVING, AND STRUCTURE

STATE	STATE PROJECT REFERENCE NO.	SHEET NO.	TOTAL SHEETS
N.C.	B-5308	1	

STATE PROJ. NO.	F.A. PROJ. NO.	DESCRIPTION
17BP.3.R.79	N/A	P.E.
17BP.3.R.79	N/A	ROW/UTIL.
17BP.3.R.79	N/A	CONST.

NAD 83/
NA 2011

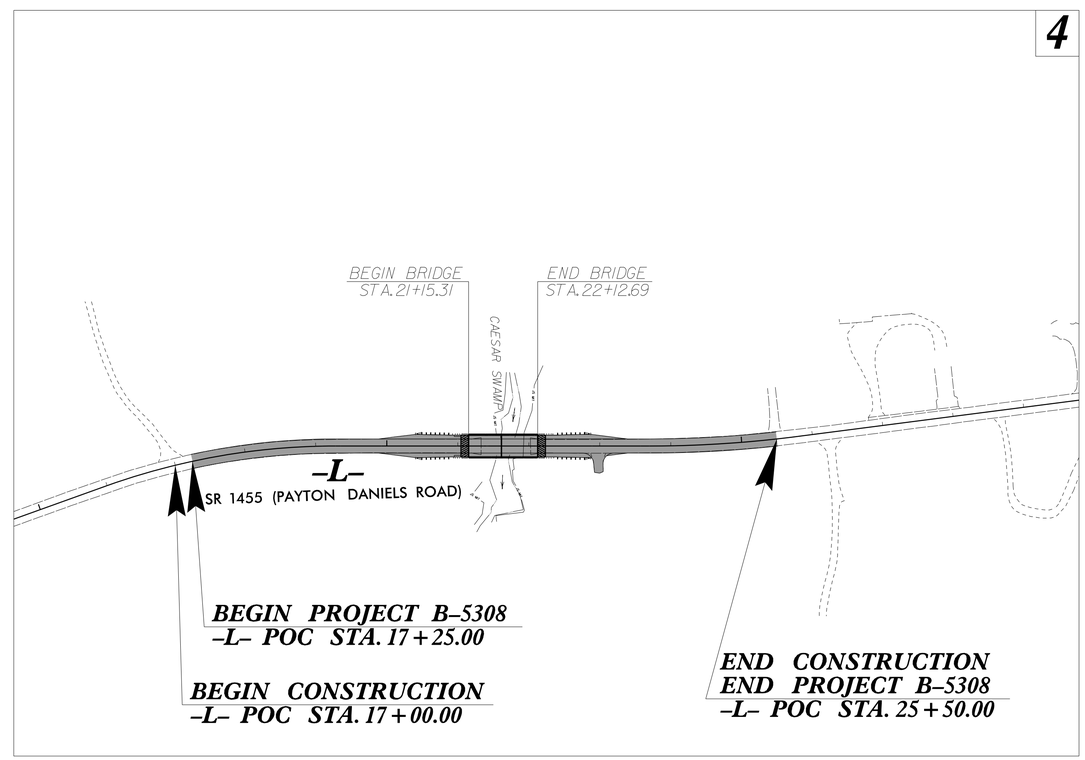

DOCUMENT NOT CONSIDERED FINAL UNLESS ALL SIGNATURES COMPLETED

GRAPHIC SCALES

50 25 0 50 100
PLANS

50 25 0 50 100
PROFILE (HORIZONTAL)

5 2.5 0 5 10
PROFILE (VERTICAL)

DESIGN DATA

ADT 2019 = 315 VPD
ADT 2040 = 586 VPD
DHV = N/A
D = N/A
T = N/A
V = 60 MPH

FUNC CLASS =
LOCAL
SUB-REGIONAL TIER

PROJECT LENGTH

LENGTH ROADWAY PROJECT B-5308	=	0.138 MILES
LENGTH STRUCTURE PROJECT B-5308	=	0.018 MILES
TOTAL LENGTH PROJECT B-5308	=	0.156 MILES

Prepared In the Office of:
CDM Smith
CDM Smith Inc.
5400 Glenwood Avenue
Suite 400
Raleigh, NC 27612-3228
NC COA No. F-1255

FOR THE NORTH CAROLINA DEPARTMENT OF TRANSPORTATION

2018 STANDARD SPECIFICATIONS

RIGHT OF WAY DATE:
AUGUST 7, 2018

LETTING DATE:
NOVEMBER 21, 2019

DAVID Z. KEISER, PE
PROJECT ENGINEER

ADAM M. CONRAD, PE
PROJECT DESIGN ENGINEER

DEREK PIELECH, PE
NCDOT CONTACT

HYDRAULICS ENGINEER

10/10/2019

NORTH CAROLINA PROFESSIONAL SEAL 046226 ENGINEER JASON M. PATSKOSKI

DocuSigned by:
EF2AA33FDF22483...
SIGNATURE:
P.E.

ROADWAY DESIGN ENGINEER

10/10/2019

NORTH CAROLINA PROFESSIONAL SEAL 033400 ENGINEER DAVID Z. KEISER

DocuSigned by:
David Z. Keiser
5FFD0B2D25FB4D4...
SIGNATURE:
P.E.

STATE OF NORTH CAROLINA DEPARTMENT OF TRANSPORTATION

SYSTIME
:::\Roadway\Proj\B5308_Rdy.tsh
USER: BOESCHJA

DocuSign Envelope ID: 2DD80076-633F-4FB7-BDAD-4A829D9C40C5

8/17/99

PROJECT REFERENCE NO.	SHEET NO.
B-5308	1-A

DOCUMENT NOT CONSIDERED FINAL UNLESS ALL SIGNATURES COMPLETED

ROADWAY DESIGN ENGINEER

NORTH CAROLINA PROFESSIONAL ENGINEER SEAL 033400 10/10/2019

DocuSigned by: David E. Keiser

DAVID E. KEISER, PE
SEAL 033400
ROADWAY DESIGN ENGINEER

CDM Smith
CDM Smith Inc.
5400 Glenwood Avenue
Suite 400
Raleigh, NC 27612-3228
NC CDA No. F-1255

INDEX OF SHEETS

SHEET NUMBER	SHEET
1	TITLE SHEET
1-A	INDEX OF SHEETS, GENERAL NOTES AND STANDARD DRAWINGS
1-B	CONVENTIONAL SYMBOLS
1C	SURVEY CONTROL SHEET
1D	PROPOSED ALIGNMENT CONTROL SHEET
1E-1 THRU 1E-2	RIGHT OF WAY CONTROL SHEETS
2A-1 THRU 2A-2	PAVEMENT SCHEDULE AND TYPICAL SECTIONS
2C-1	DETAIL OF MODIFIED METHOD OF CLEARING III
2G-1	GEOTEXTILE FOR EMBANKMENT STABILIZATION DETAILS
3B-1 THRU 3B-2	ROADWAY, DRAINAGE AND GEOTECHNICAL SUMMARIES
4-5	PLAN AND PROFILE SHEETS
TMP-1 THRU TMP-3	TRANSPORTATION MANAGEMENT PLANS
PMP-1 THRU PMP-2	PAVEMENT MARKING PLANS
EC-1 THRU EC-5	EROSION CONTROL PLANS
UC-1 THRU UC-4	UTILITY CONSTRUCTION PLANS
UO-1 THRU UO-2	UTILITIES BY OTHERS PLANS
X-1 THRU X-6	CROSS-SECTION INDEX SHEET AND CROSS-SECTIONS
S1 THRU S19	STRUCTURE PLANS

EFF. 01-16-2018
REV.

2018 ROADWAY ENGLISH STANDARD DRAWINGS

The following Roadway Standards as appear in "Roadway Standard Drawings" Highway Design Branch - N. C. Department of Transportation - Raleigh, N. C., Dated January, 2018 are applicable to this project and by reference hereby are considered a part of these plans:

STD.NO. TITLE

DIVISION 2 - EARTHWORK

200.03 Method of Clearing - Modified Method III (Use Detail in Lieu of Standard)
225.02 Guide for Grading Subgrade - Secondary and Local
225.04 Method of Obtaining Superelevation - Two Lane Pavement

DIVISION 3 - PIPE CULVERTS

300.01 Method of Pipe Installation
310.10 Driveway Pipe Construction

DIVISION 4 - MAJOR STRUCTURES

422.02 Bridge Approach Fills - Type II Modified Approach Fill

DIVISION 5 - SUBGRADE, BASES AND SHOULDERS

560.01 Method of Shoulder Construction - High Side of Superelevated Curve - Method I

DIVISION 8 - INCIDENTALS

815.02 Subsurface Drain
840.00 Concrete Base Pad for Drainage Structures
840.29 Frames and Narrow Slot Flat Grates
840.35 Traffic Bearing Grated Drop Inlet - for Cast Iron Double Frame and Grates
846.01 Concrete Curb, Gutter and Curb & Gutter
846.04 Drop Inlet Installation in Shoulder Berm Gutter
862.01 Guardrail Placement
862.02 Guardrail Installation
862.03 Structure Anchor Units
876.02 Guide for Rip Rap at Pipe Outlets
876.04 Drainage Ditches with Class 'B' Rip Rap

GENERAL NOTES:

2018 SPECIFICATIONS
EFFECTIVE: 01-16-2018
REVISED:

GRADE LINE:
GRADING AND SURFACING:

THE GRADE LINES SHOWN DENOTE THE FINISHED ELEVATION OF THE PROPOSED SURFACING AT GRADE POINTS SHOWN ON THE TYPICAL SECTIONS. GRADE LINES MAY BE ADJUSTED AT THEIR BEGINNING AND ENDING AND AT STRUCTURES AS DIRECTED BY THE ENGINEER IN ORDER TO SECURE A PROPER TIE-IN.

CLEARING:

CLEARING ON THIS PROJECT SHALL BE PERFORMED TO THE LIMITS ESTABLISHED BY MODIFIED METHOD III.

SUPERELEVATION:

ALL CURVES ON THIS PROJECT SHALL BE SUPERELEVATED IN ACCORDANCE WITH STD. NO. 225.04 USING THE RATE OF SUPERELEVATION AND RUNOFF SHOWN ON THE PLANS. SUPERELEVATION IS TO BE REVOLVED ABOUT THE GRADE POINTS SHOWN ON THE TYPICAL SECTIONS.

SHOULDER CONSTRUCTION:

ASPHALT, EARTH, AND CONCRETE SHOULDER CONSTRUCTION ON THE HIGH SIDE OF SUPERELEVATED CURVES SHALL BE IN ACCORDANCE WITH STD. NO. 560.01

SUBSURFACE DRAINS:

SUBSURFACE DRAINS SHALL BE CONSTRUCTED IN ACCORDANCE WITH STD. NO. 815.02 AT LOCATIONS DIRECTED BY THE ENGINEER.

GUARDRAIL:

THE GUARDRAIL LOCATIONS SHOWN ON THE PLANS MAY BE ADJUSTED DURING CONSTRUCTION AS DIRECTED BY THE ENGINEER. THE CONTRACTOR SHOULD CONSULT WITH THE ENGINEER PRIOR TO ORDERING GUARDRAIL MATERIAL.

END BENTS:

THE ENGINEER SHALL CHECK THE STRUCTURE END BENT PLANS, DETAILS, AND CROSS-SECTION PRIOR TO SETTING OF THE SLOPE STAKES FOR THE EMBANKMENT OR EXCAVATION APPROACHING A BRIDGE.

UTILITIES:

UTILITY OWNERS ON THIS PROJECT ARE

SOUTH RIVER ELECTRIC MEMBERSHIP CORPORATION - POWER DISTRIBUTION
SAMPSON COUNTY WATER - WATER DISTRIBUTION
STAR COMMUNICATIONS - TELECOMMUNICATION

ANY RELOCATION OF EXISTING UTILITIES WILL BE ACCOMPLISHED BY OTHERS, EXCEPT AS SHOWN ON THE PLANS.

RIGHT-OF-WAY MARKERS:

ALL RIGHT-OF-WAY MARKERS AND PERMANENT EASEMENT MARKERS ARE TO BE PLACED BY L & S. THE CONTRACT SURVEYOR WILL BE RESPONSIBLE FOR RESETTING ANY POINTS DISTRURBED DURING CONSTRUCTION.

SYSTIME
IDPROADWAY\Proj\B5308_Rdy_psh_1A
USER: RDESIGN1A

DocuSign Envelope ID: 2DD80076-633F-4FB7-BDAD-4A829D9C40C5

12/2/2016

PROJECT REFERENCE NO.	SHEET NO.
B-5308	1-B

STATE OF NORTH CAROLINA, DIVISION OF HIGHWAYS

CONVENTIONAL PLAN SHEET SYMBOLS

Note: Not to Scale

***S.U.E. = Subsurface Utility Engineering**

BOUNDARIES AND PROPERTY:

- State Line
- County Line
- Township Line
- City Line
- Reservation Line
- Property Line
- Existing Iron Pin — EIP
- Computed Property Corner
- Property Monument — ECM
- Parcel/Sequence Number — 123
- Existing Fence Line
- Proposed Woven Wire Fence
- Proposed Chain Link Fence
- Proposed Barbed Wire Fence
- Existing Wetland Boundary — WLB
- Proposed Wetland Boundary — WLB
- Existing Endangered Animal Boundary — EAB
- Existing Endangered Plant Boundary — EPB
- Existing Historic Property Boundary — HPB
- Known Contamination Area: Soil — S
- Potential Contamination Area: Soil — S
- Known Contamination Area: Water — W
- Potential Contamination Area: Water — W
- Contaminated Site: Known or Potential

BUILDINGS AND OTHER CULTURE:

- Gas Pump Vent or U/G Tank Cap
- Sign — S
- Well — W
- Small Mine
- Foundation
- Area Outline
- Cemetery
- Building
- School
- Church
- Dam

HYDROLOGY:

- Stream or Body of Water
- Hydro, Pool or Reservoir
- Jurisdictional Stream — JS
- Buffer Zone 1 — BZ 1
- Buffer Zone 2 — BZ 2
- Flow Arrow
- Disappearing Stream
- Spring
- Wetland
- Proposed Lateral, Tail, Head Ditch — FLOW
- False Sump

RAILROADS:

- Standard Gauge — CSX TRANSPORTATION
- RR Signal Milepost — MILEPOST 35
- Switch — SWITCH
- RR Abandoned
- RR Dismantled

RIGHT OF WAY & PROJECT CONTROL:

- Secondary Horiz and Vert Control Point
- Primary Horiz Control Point
- Primary Horiz and Vert Control Point
- Exist Permanent Easment Pin and Cap
- New Permanent Easement Pin and Cap
- Vertical Benchmark
- Existing Right of Way Marker
- Existing Right of Way Line
- New Right of Way Line — RW
- New Right of Way Line with Pin and Cap — RW
- New Right of Way Line with Concrete or Granite R/W Marker — RW
- New Control of Access Line with Concrete C/A Marker — CA
- Existing Control of Access — CA
- New Control of Access — CA
- Existing Easement Line — E
- New Temporary Construction Easement — E
- New Temporary Drainage Easement — TDE
- New Permanent Drainage Easement — PDE
- New Permanent Drainage / Utility Easement — DUE
- New Permanent Utility Easement — PUE
- New Temporary Utility Easement — TUE
- New Aerial Utility Easement — AUE

ROADS AND RELATED FEATURES:

- Existing Edge of Pavement
- Existing Curb
- Proposed Slope Stakes Cut — C
- Proposed Slope Stakes Fill — F
- Proposed Curb Ramp — CR
- Existing Metal Guardrail
- Proposed Guardrail
- Existing Cable Guiderail
- Proposed Cable Guiderail
- Equality Symbol
- Pavement Removal

VEGETATION:

- Single Tree
- Single Shrub
- Hedge
- Woods Line
- Orchard
- Vineyard — Vineyard

EXISTING STRUCTURES:

MAJOR:

- Bridge, Tunnel or Box Culvert — CONC
- Bridge Wing Wall, Head Wall and End Wall — CONC WW

MINOR:

- Head and End Wall — CONC HW
- Pipe Culvert
- Footbridge
- Drainage Box: Catch Basin, DI or JB — CB
- Paved Ditch Gutter
- Storm Sewer Manhole — S
- Storm Sewer — S

UTILITIES:

POWER:

- Existing Power Pole
- Proposed Power Pole
- Existing Joint Use Pole
- Proposed Joint Use Pole
- Power Manhole — P
- Power Line Tower
- Power Transformer
- U/G Power Cable Hand Hole
- H-Frame Pole
- U/G Power Line LOS B (S.U.E.*) — P
- U/G Power Line LOS C (S.U.E.*) — P
- U/G Power Line LOS D (S.U.E.*) — P

TELEPHONE:

- Existing Telephone Pole
- Proposed Telephone Pole
- Telephone Manhole — T
- Telephone Pedestal — T
- Telephone Cell Tower
- U/G Telephone Cable Hand Hole
- U/G Telephone Cable LOS B (S.U.E.*) — T
- U/G Telephone Cable LOS C (S.U.E.*) — T
- U/G Telephone Cable LOS D (S.U.E.*) — T
- U/G Telephone Conduit LOS B (S.U.E.*) — TC
- U/G Telephone Conduit LOS C (S.U.E.*) — TC
- U/G Telephone Conduit LOS D (S.U.E.*) — TC
- U/G Fiber Optics Cable LOS B (S.U.E.*) — T FO
- U/G Fiber Optics Cable LOS C (S.U.E.*) — T FO
- U/G Fiber Optics Cable LOS D (S.U.E.*) — T FO

WATER:

- Water Manhole — W
- Water Meter
- Water Valve
- Water Hydrant
- U/G Water Line LOS B (S.U.E*) — W
- U/G Water Line LOS C (S.U.E*) — W
- U/G Water Line LOS D (S.U.E*) — W
- Above Ground Water Line — A/G Water

TV:

- TV Pedestal — C
- TV Tower
- U/G TV Cable Hand Hole — HH
- U/G TV Cable LOS B (S.U.E.*) — TV
- U/G TV Cable LOS C (S.U.E.*) — TV
- U/G TV Cable LOS D (S.U.E.*) — TV
- U/G Fiber Optic Cable LOS B (S.U.E.*) — TV FO
- U/G Fiber Optic Cable LOS C (S.U.E.*) — TV FO
- U/G Fiber Optic Cable LOS D (S.U.E.*) — TV FO

GAS:

- Gas Valve
- Gas Meter
- U/G Gas Line LOS B (S.U.E.*) — G
- U/G Gas Line LOS C (S.U.E.*) — G
- U/G Gas Line LOS D (S.U.E.*) — G
- Above Ground Gas Line — A/G Gas

SANITARY SEWER:

- Sanitary Sewer Manhole
- Sanitary Sewer Cleanout
- U/G Sanitary Sewer Line — SS
- Above Ground Sanitary Sewer — A/G Sanitary Sewer
- SS Forced Main Line LOS B (S.U.E.*) — FSS
- SS Forced Main Line LOS C (S.U.E.*) — FSS
- SS Forced Main Line LOS D (S.U.E.*) — FSS

MISCELLANEOUS:

- Utility Pole
- Utility Pole with Base
- Utility Located Object
- Utility Traffic Signal Box — S
- Utility Unknown U/G Line LOS B (S.U.E.*) — ?UTL
- U/G Tank; Water, Gas, Oil
- Underground Storage Tank, Approx. Loc. — UST
- A/G Tank; Water, Gas, Oil
- Geoenvironmental Boring
- U/G Test Hole LOS A (S.U.E.*)
- Abandoned According to Utility Records — AATUR
- End of Information — E.O.I.

DocuSign Envelope ID: 2DD80076-633F-4FB7-BDAD-4A829D9C40C5

6/2/99

PROJECT REFERENCE NO.	SHEET NO.
B-5308	1C
Location and Surveys	

SURVEY CONTROL SHEET B_5308

W/ EXISTING CENTERLINE ALIGNMENTS PRIOR TO CONSTRUCTION

DATUM DESCRIPTION

THE LOCALIZED COORDINATE SYSTEM DEVELOPED FOR THIS PROJECT IS BASED ON THE STATE PLANE COORDINATES ESTABLISHED BY NCDOT FOR MONUMENT "B5308-2"
WITH NAD 83/NA 2011 STATE PLANE GRID COORDINATES OF
NORTHING: 499620.675(ft) EASTING: 2104844.358(ft)
ELEVATION: 157.998(ft)
THE AVERAGE COMBINED GRID FACTOR USED ON THIS PROJECT (GROUND TO GRID) IS: 0.9998731481
THE N.C. LAMBERT GRID BEARING AND LOCALIZED HORIZONTAL GROUND DISTANCE FROM "B5308-2" TO -L- STATION 10+00.00 IS N 52° 40' 41" W 15.65'
ALL LINEAR DIMENSIONS ARE LOCALIZED HORIZONTAL DISTANCES
VERTICAL DATUM USED IS NAVD 88

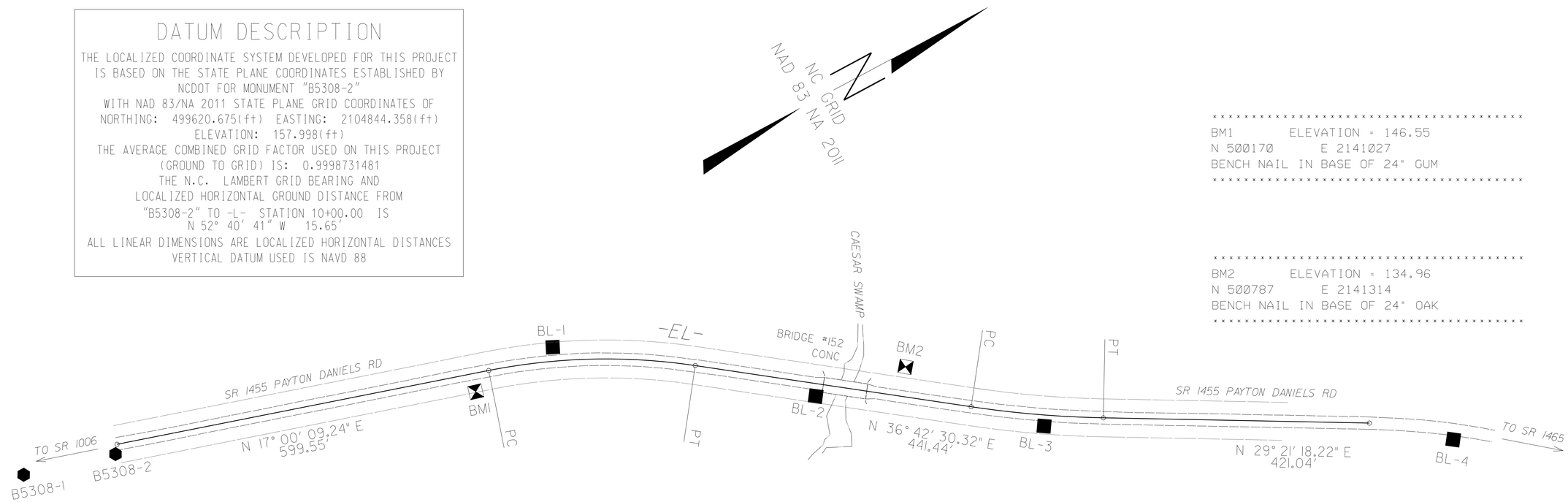


```
*****************************************
BM1        ELEVATION = 146.55
N 500170       E 2141027
BENCH NAIL IN BASE OF 24" GUM
*****************************************
```

```
*****************************************
BM2        ELEVATION = 134.96
N 500787       E 2141314
BENCH NAIL IN BASE OF 24" OAK
*****************************************
```

BL

POINT	DESC.	NORTH	EAST	ELEVATION
B53081	GPS CAP & REBAR	498705.6270	2140388.2800	163.32
B53082	GPS CAP & REBAR	499620.6750	2140844.3580	158.00
BL1	TRV CAP & REBAR	500310.1700	2141022.6770	141.24
BL2	TRV CAP & REBAR	500640.0470	2141287.8130	134.79
BL3	TRV CAP & REBAR	500936.1130	2141500.3750	138.80
BL4	TRV CAP & REBAR	501496.5660	2141825.3770	149.12

EL

POINT	N	E	BEARING	DIST	DELTA	D	L	T	R
POT	499630.164	2140831.912							
LINE			N 17°00'09.2" E	599.55					
PC	500203.511	2141007.230							
CURVE			N 26°51'19.8" E	326.81	19°42'21.1"(RT)	06°00'00.0"	328.43	165.85	954.93
PT	500495.078	2141154.866							
LINE			N 36°42'30.3" E	441.44					
PC	500848.972	2141418.732							
CURVE			N 33°01'54.3" E	209.95	07°21'12.1"(LT)	03°30'00.0"	210.10	105.19	1637.02
PT	501024.990	2141533.177							
LINE			N 29°21'18.2" E	421.03					
POT	501391.963	2141739.577							

NOTES:

1. IF FURTHER INFORMATION REGARDING PROJECT CONTROL IS NEEDED, PLEASE CONTACT THE LOCATION AND SURVEYS UNIT.

2. PROJECT CONTROL WAS ESTABLISHED USING GNSS, THE GLOBAL NAVIGATION SATELLITE SYSTEM.

NOTE: DRAWING NOT TO SCALE

-SYSTIME- 5308_ls_lc_190919.dgn
USER: BOFSCHIA

DocuSign Envelope ID: 2DD80076-633F-4FB7-BDAD-4A829D9C40C5

6/2/99

PROJECT REFERENCE NO.	SHEET NO.
B-5308	1D
Location and Surveys	

PROPOSED ALIGNMENT CONTROL SHEET B_5308

L

TYPE	STATION	NORTH	EAST
POT	10+00.00	499630.1637	2140831.9122
PC	15+99.54	500203.4992	2141007.2266
PT	19+28.00	500495.0879	2141154.8733
PC	23+69.55	500849.0766	2141418.8093
PT	25+79.39	501024.8763	2141533.1134
POT	30+00.55	501391.9630	2141739.5770

NOTES:

1. IF FURTHER INFORMATION REGARDING PROJECT CONTROL IS NEEDED, PLEASE CONTACT THE LOCATION AND SURVEYS UNIT.

2. PROJECT CONTROL WAS ESTABLISHED USING GNSS, THE GLOBAL NAVIGATION SATELLITE SYSTEM.

NOTE: DRAWING NOT TO SCALE

-SYSTIME
-Version 5308.1s.1d.190919.dgn
USER:BOFSCHIA

DocuSign Envelope ID: 2DD80076-633F-4FB7-BDAD-4A829D9C40C5

PROJECT REFERENCE NO.	SHEET NO.
B-5308	1E-1

RIGHT OF WAY CONTROL SHEET B-5308

REVISIONS

ROW MARKER IRON PIN AND CAP-E

ALIGN	STATION	OFFSET	NORTH	EAST	
L	20+85.00	45.00	500594.05797	2141284.79749	NOT SET - IN WATER
L	20+85.00	-30.00	500638.88870	2141224.67090	
L	20+85.00	30.00	500603.02412	2141272.77217	
L	20+85.00	-45.00	500647.85484	2141212.64558	NOT SET - IN WATER
L	22+30.00	50.00	500707.31399	2141375.47866	
L	22+30.00	30.00	500719.26885	2141359.44490	
L	22+50.00	-45.00	500780.13333	2141311.27318	
L	22+50.00	-30.00	500771.16718	2141323.29850	

NOTES:

1. IF FURTHER INFORMATION REGARDING PROJECT CONTROL IS NEEDED, PLEASE CONTACT THE LOCATION AND SURVEYS UNIT.

2. PROJECT CONTROL WAS ESTABLISHED USING GNSS, THE GLOBAL NAVIGATION SATELLITE SYSTEM.

DocuSign Envelope ID: 2DD80076-633F-4FB7-BDAD-4A829D9C40C5

PROJECT REFERENCE NO.	SHEET NO.
B-5308	1E-2

PERMANENT EASEMENT CONTROL SHEET B-5308

REVISIONS

ROW MARKER PERMANENT EASEMENT-E

ALIGN	STATION	OFFSET	NORTH	EAST	
L	17+00.00	-30.00	500309.58334	2141013.98739	
L	17+03.00	-52.00	500321.09921	2140994.98284	
L	19+11.00	-68.00	500521.04303	2141089.60656	NOT SET - IN WATER
L	19+13.00	-53.00	500514.00555	2141103.02284	NOT SET - IN WATER
L	19+31.00	-71.00	500539.93624	2141099.74928	NOT SET - IN WATER
L	19+33.00	-54.00	500531.37798	2141114.57346	NOT SET - IN WATER
L	22+25.00	-64.00	500771.44825	2141281.09754	NOT SET - IN WATER
L	22+25.00	-54.00	500765.47082	2141289.11441	
L	22+45.00	-64.00	500787.48200	2141293.05240	NOT SET - IN WATER
L	22+45.00	-54.00	500781.50457	2141301.06927	
L	23+50.00	30.00	500815.47138	2141431.17406	
L	23+70.00	-54.01	500881.70918	2141375.77082	
L	23+70.00	-30.00	500867.36310	2141395.02272	
L	24+12.00	-30.00	500900.73731	2141419.22862	
L	24+12.00	-53.48	500914.27695	2141400.04976	
L	25+12.00	-48.00	500992.07402	2141458.04671	
L	25+12.00	-30.00	500982.61303	2141473.35549	

NOTES:

1. IF FURTHER INFORMATION REGARDING PROJECT CONTROL IS NEEDED, PLEASE CONTACT THE LOCATION AND SURVEYS UNIT.

2. PROJECT CONTROL WAS ESTABLISHED USING GNSS, THE GLOBAL NAVIGATION SATELLITE SYSTEM.

-SYSTIME
-B5308_1s-1e-2_190919.dgn
USER:BOFSCHIA

DocuSign Envelope ID: 2DD80076-633F-4FB7-BDAD-4A829D9C40C5

6/2/99

PROJECT REFERENCE NO.	SHEET NO.
B-5308	2A-1
ROADWAY DESIGN ENGINEER	PAVEMENT DESIGN ENGINEER

NORTH CAROLINA PROFESSIONAL SEAL 033400 ENGINEER
10/10/2019
DocuSigned by: Dustin L. Keiser
5F0DE3A5F0B4A1...

CDM Smith
CDM Smith Inc.
5400 Glenwood Avenue
Suite 400
Raleigh, NC 27612-3228
NC COA No. F-1255

DOCUMENT NOT CONSIDERED FINAL UNLESS ALL SIGNATURES COMPLETED

PAVEMENT SCHEDULE

(FINAL PAVEMENT DESIGN)

C1	PROP. APPROX. 1.5″ ASPHALT CONCRETE SURFACE COURSE, TYPE S9.5B, AT AN AVERAGE RATE OF 165 LBS. PER SQ. YD.
C2	PROP. APPROX. 3″ ASPHALT CONCRETE SURFACE COURSE, TYPE S9.5B, AT AN AVERAGE RATE OF 165 LBS. PER SQ. YD. IN EACH OF TWO LAYERS.
C3	PROP. VAR. DEPTH ASPHALT CONCRETE SURFACE COURSE, TYPE S9.5B, AT AN AVERAGE RATE OF 110 LBS. PER SQ. YD. PER 1″ DEPTH. TO BE PLACED IN LAYERS NOT LESS THAN 1″ IN DEPTH OR GREATER THAN 1 ½″ IN DEPTH.
E1	PROP. APPROX. 5.5″ ASPHALT CONCRETE BASE COURSE, TYPE B25.0C, AT AN AVERAGE RATE OF 627 LBS. PER SQ. YD.
E2	PROP. VAR. DEPTH ASPHALT CONCRETE BASE COURSE, TYPE B25.0C, AT AN AVERAGE RATE OF 114 LBS. PER SQ. YD. PER 1″ DEPTH. TO BE PLACED IN LAYERS NOT LESS THAN 3″ IN DEPTH OR GREATER THAN 5½″ IN DEPTH.
R1	SHOULDER BERM GUTTER
T	EARTH MATERIAL.
U	EXISTING PAVEMENT.
V	INCIDENTAL MILLING
W	VARIABLE DEPTH ASPHALT PAVEMENT (SEE -L- WEDGING DETAIL)

NOTE: ALL PAVEMENT EDGE SLOPES ARE 1:1 UNLESS SHOWN OTHERWISE.

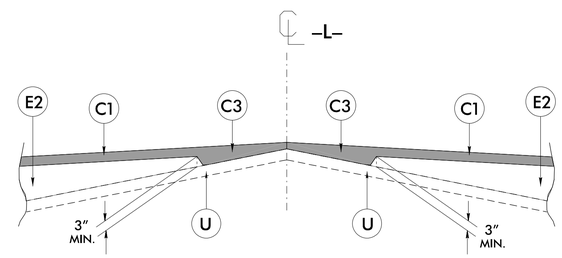

Detail Showing Method Of Wedging – W
–L–

MILLING DETAIL
INCIDENTAL MILLING AT BEGIN/END FOR TIE–INS

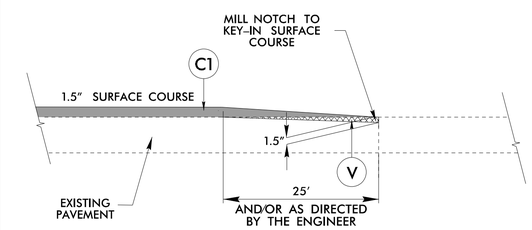

–L– STA. 17+25.00 TO STA. 17+50.00
–L– STA. 25+25.00 TO STA. 25+50.00

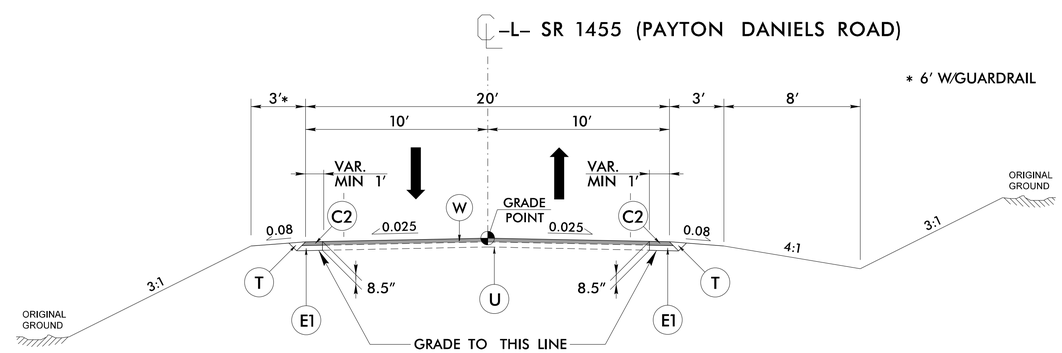

TYPICAL SECTION NO. 1

USE TYPICAL SECTION NO. 1

–L– STA. 17+25.00 TO STA. 20+37.00
–L– STA. 23+10.00 TO STA. 25+50.00

SYSTIME
-Y:\Projects\Proj\B5308_Rdy.typ
USER:BRESCHUJA

DocuSign Envelope ID: 2DD80076-633F-4FB7-BDAD-4A829D9C40C5

PROJECT REFERENCE NO.	SHEET NO.
B-5308	2A-2

ROADWAY DESIGN ENGINEER

NORTH CAROLINA 10/10/2019 SEAL 033400 ENGINEER

DocuSigned by: 10/10/2019 | 8:08 AM EDT

PAVEMENT DESIGN ENGINEER

CDM Smith
CDM Smith Inc.
5400 Glenwood Avenue
Suite 400
Raleigh, NC 27612-3228
NC COA No. F-1255

DOCUMENT NOT CONSIDERED FINAL UNLESS ALL SIGNATURES COMPLETED

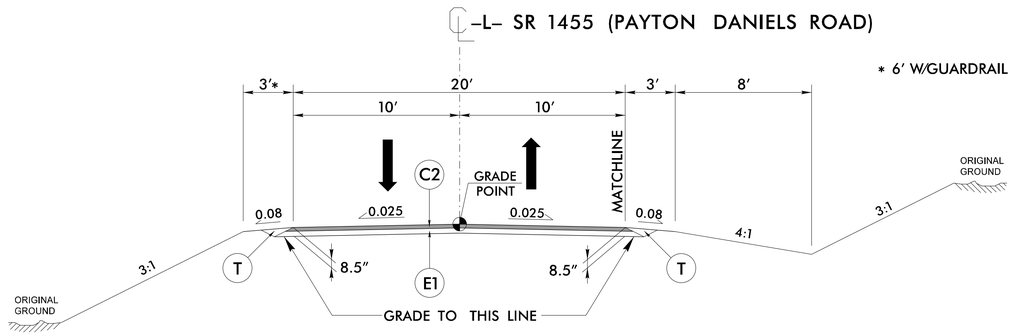

TYPICAL SECTION NO. 2

USE TYPICAL SECTION NO. 2

–L– STA. 20+37.00 TO STA. 21+15.31 (BEGIN BRIDGE)
–L– STA. 22+12.69 (END BRIDGE) TO STA 23+10.00

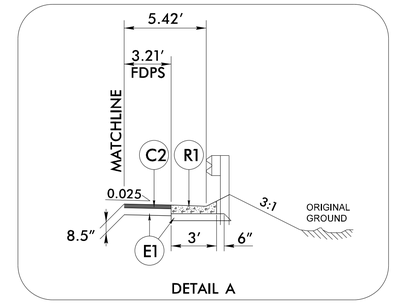

DETAIL A

USE DETAIL A IN CONJUNCTION WITH TYPICAL SECTION NO. 2

–L– STA. 20+95.00 TO STA. 21+04.44 (LT/RT)

PAVEMENT SCHEDULE (FINAL PAVEMENT DESIGN)	
C1	1.5″ S9.5B
C2	3″ S9.5B
C3	VAR. S9.5B
E1	5.5″ B25.0C
E2	VAR. B25.0C
R1	SBG
T	EARTH MATERIAL
U	EXIST. PAVEMENT
V	INCIDENTAL MILLING
W	WEDGING

PAVEMENT EDGESLOPES 1:1 UNLESS NOTED OTHERWISE

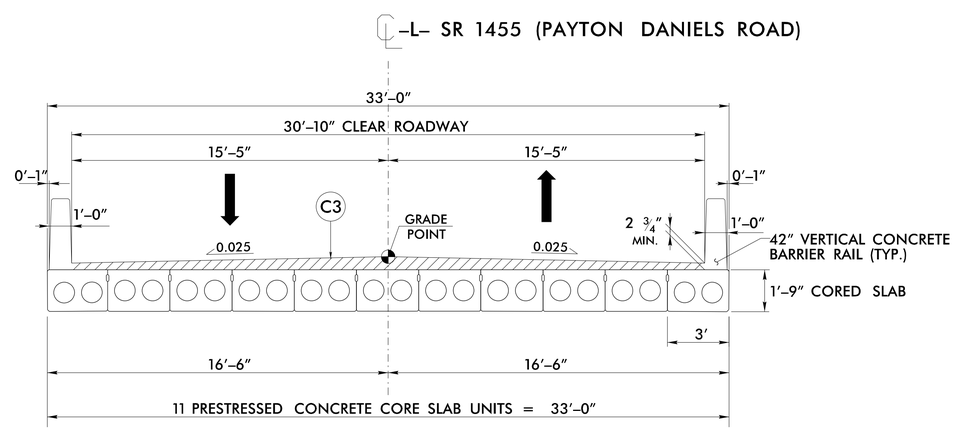

TYPICAL SECTION NO. 3

USE BRIDGE TYPICAL SECTION NO. 3

–L– STA. 21+15.31 (BEGIN BRIDGE) TO STA. 22+12.69 (END BRIDGE)

6/2/99

-SYSTIME
-S:\Proj\Proj\B5308_Rdy.typ
USER: BOPSHIA

DocuSign Envelope ID: 2DD80076-633F-4FB7-BDAD-4A829D9C40C5

PROJECT REFERENCE NO.	SHEET NO.
B-5308	2C-1

STATE OF
NORTH CAROLINA
DEPT. OF TRANSPORTATION
DIVISION OF HIGHWAYS
RALEIGH, N.C.

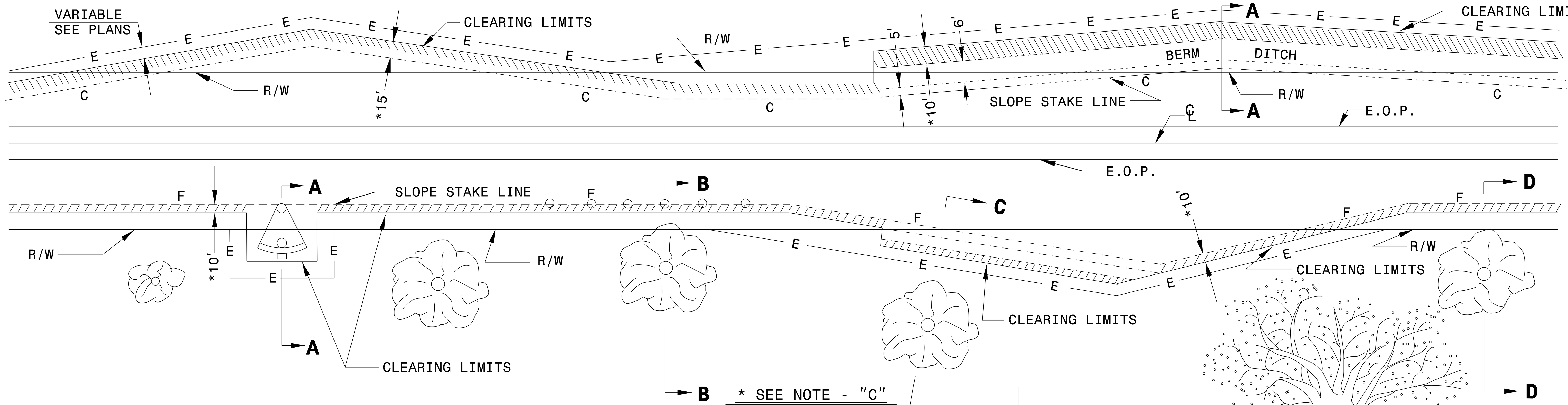

GENERAL NOTES:

1. REMOVE TREES OUTSIDE THE CLEARING LIMIT WHEN, IN THE OPINION OF THE ENGINEER, THE UTILITY OF A TREE WILL BE DESTROYED BY THE CONSTRUCTION OR THE CLEARING OPERATION.
2. CLEAR IN ACCORDANCE WITH THIS STANDARD EXCEPT WHERE ADDITIONAL CLEARING IS REQUIRED FOR SAFETY AS SHOWN ON THE PLANS.

METHOD III CLEARING LIMITS

(A) CUTS -- CLEAR TO CONSTRUCTION LIMITS.
(B) FILLS - CLEAR TO 5'/10' * BEYOND CONSTRUCTION LIMITS, UNLESS SPECIFIED OTHERWISE BY WETLAND PERMIT.
(C) CUTS AND FILLS - WHEN THE CLEARING LIMITS (A AND B) EXCEED THE PROPOSED R/W OR PROPOSED CONSTRUCTION EASEMENTS, THEN CLEAR ONLY TO THE R/W OR CONSTRUCTION EASEMENT WHICHEVER IS GREATER.

* FOR FILL HEIGHTS LESS THAN 10' CLEAR TO 5' BEYOND CONSTRUCTION LIMITS.
* FOR FILL HEIGHTS 10' OR GREATER CLEAR TO 10' BEYOND CONSTRUCTION LIMITS.
** PLACE SILT FENCE AT 5' BEYOND TOE OF SLOPE IN FILL SECTIONS WITH LESS THAN 10'. PLACE SILT FENCE AT 10' BEYOND TOE OF SLOPE IN FILL SECTIONS WITH 10' OR GREATER.

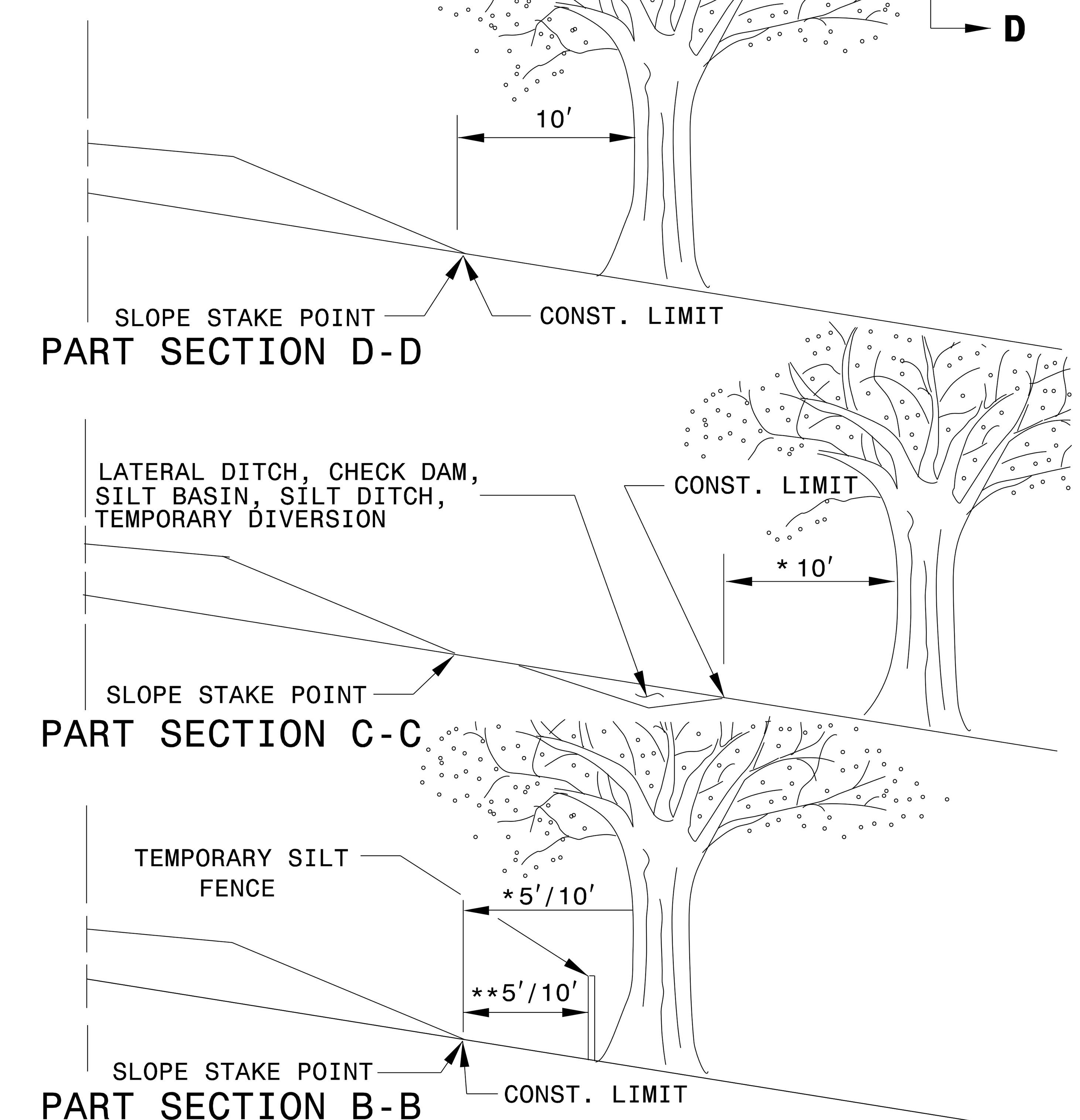

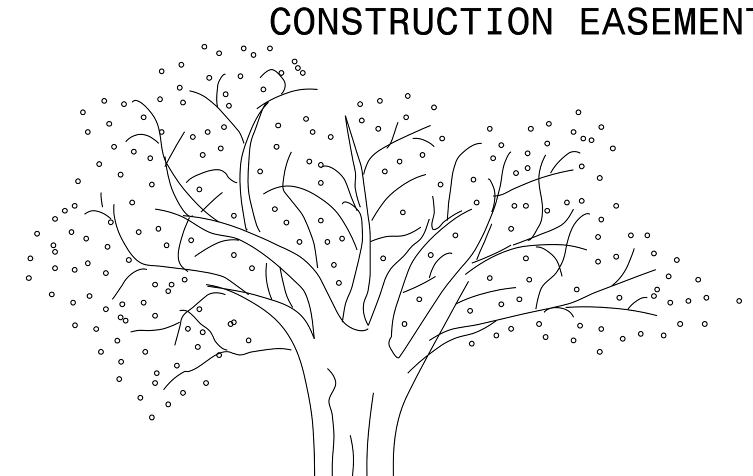

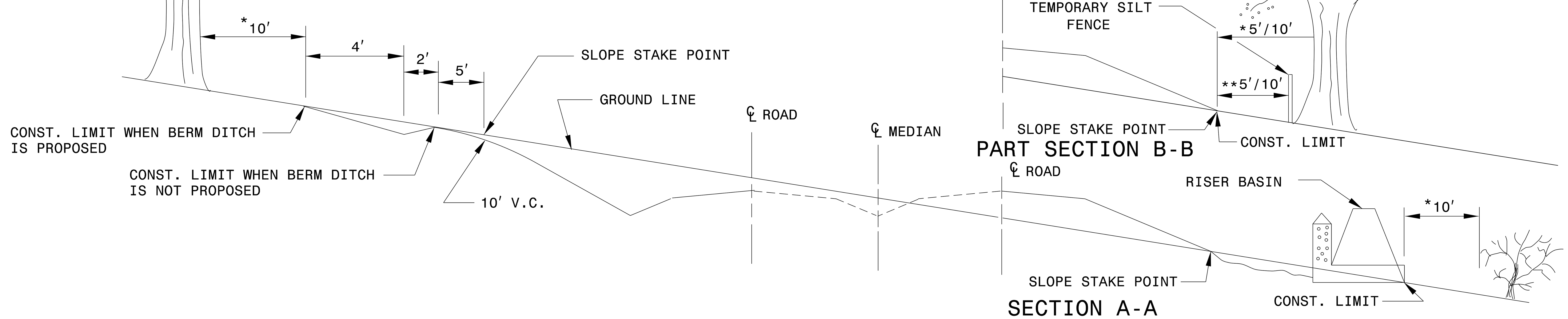

ENGLISH DETAIL DRAWING FOR
METHOD OF CLEARING
MODIFIED METHOD - III

SHEET 1 OF 1
200D03

STATE OF
NORTH CAROLINA
DEPT. OF TRANSPORTATION
DIVISION OF HIGHWAYS
RALEIGH, N.C.

ENGLISH DETAIL DRAWING FOR
METHOD OF CLEARING
MODIFIED METHOD - III

SHEET 1 OF 1
200D03

CONTRACT STANDARDS
AND DEVELOPMENT UNIT
Office 919-707-6950 FAX 919-250-4119

SEE TITLE BLOCK

ORIGINAL BY: T.S.S. DATE: FEB.2000
MODIFIED BY: K.A.K. DATE: AUG.2016
CHECKED BY: DATE:
FILE SPEC.: kkempf/english/0200d301.dgn

$$$$$$SYSTIME$$$$$ $$$$$$$$$$$$$$DGN$$$$$$$$$$$$$$$$$$$$$ $$$$USERNAME$$$$

DocuSign Envelope ID: 2DD80076-633F-4FB7-BDAD-4A829D9C40C5

PROJECT REFERENCE NO.	SHEET NO.
B-5308	2G-1

GEOTECHNICAL ENGINEER

NORTH CAROLINA PROFESSIONAL SEAL 032171 ENGINEER JINYOUNG PARK

DocuSigned by: A713DBC3B3B4... 6/28/2018

SIGNATURE DATE

ENGINEER

SIGNATURE DATE

DOCUMENT NOT CONSIDERED FINAL UNLESS ALL SIGNATURES COMPLETED

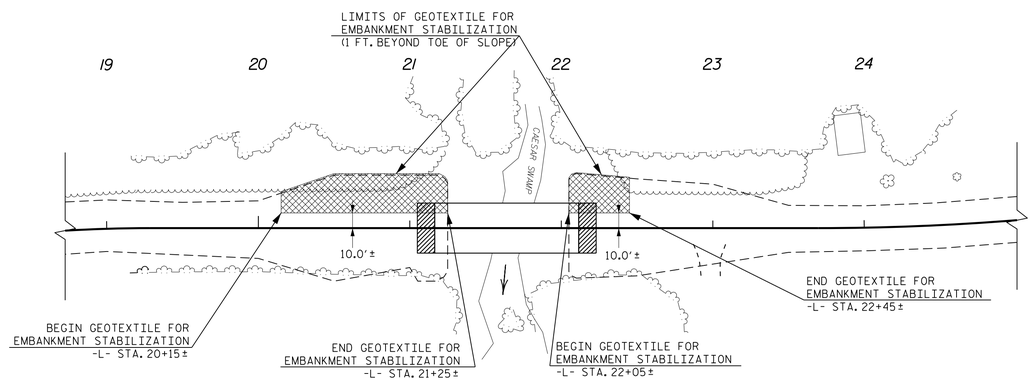

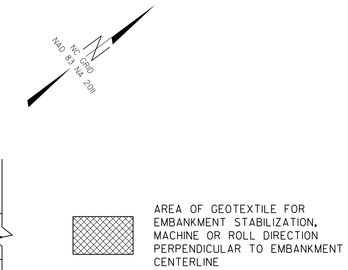

PLAN VIEW

N.T.S.

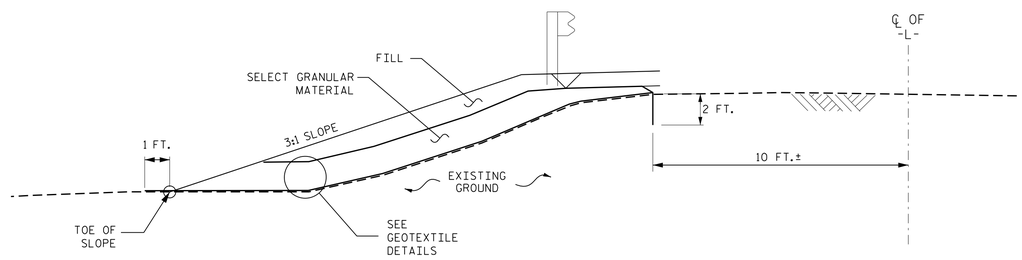

TYPICAL CROSS SECTION

N.T.S.

NOTES

1. DO NOT GRUB, ONLY CLEAR THE AREA WITHIN THE LIMITS OF THE GEOTEXTILE FOR EMBANKMENT STABILIZATION.
2. PLACE GEOTEXTILE FOR EMBANKMENT STABILIZATION PERPENDICULAR TO EMBANKMENT CENTERLINE ON THE EXISTING GROUND AS SHOWN IN THE PLAN OR AS DIRECTED BY THE ENGINEER.
3. PLACE THE GEOTEXTILE WITHOUT ANY WRINKLES OR CREASES.
4. PLACE 2 FT. OF SELECT GRANULAR MATERIAL ON THE GEOTEXTILE FOR EMBANKMENT STABILIZATION.
5. NO SEAMS OR JOINTS ARE ALLOWED IN THE MACHINE DIRECTION OF GEOTEXTILE.
6. THE TERMS ROLL AND MACHINE DIRECTION ARE USED INTERCHANGEABLY.
7. ALL JOINTS IN THE CROSS MACHINE DIRECTION MUST BE OVERLAPPED A MINMUM OF 18 INCHES.
8. FOR GEOTEXTILE FOR EMBANKMENT STABILIZATION , SEE GEOTEXTILE FOR EMBANKMENT STABILIZATION SPECIAL PROVISION.

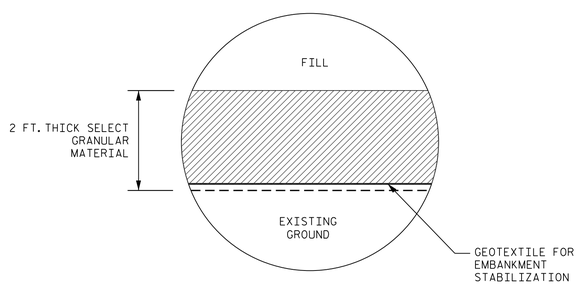

GEOTEXTILE DETAILS

N.T.S.

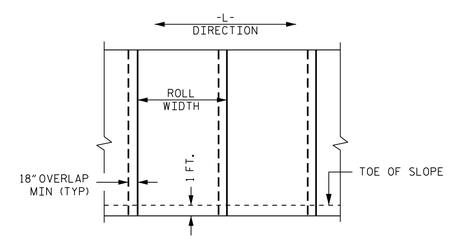

GEOTEXTILE OVERLAP DETAIL

(PLAN VIEW, N.T.S.)

QUANTITIES

GEOTEXTILE FOR EMBANKMENT STABILIZATION	500 SY*
SELECT GRANULAR MATERIAL	300 CY

* GEOTEXTILE FOR EMBANKMENT STABILIZATION ESTIMATED QUANTITY DOES NOT INCLUDE OVERLAPS OR WASTE.

PREPARED BY: J. PARK	DATE: 06/2018
REVIEWED BY: J. BATTS	DATE: 06/2018

NORTH CAROLINA DEPARTMENT OF TRANSPORTATION DIVISION OF HIGHWAYS

GEOTECHNICAL ENGINEERING UNIT

GEOTEXTILE FOR EMBANKMENT STABILIZATION DETAILS

REVISIONS

NO.	BY	DATE	NO.	BY	DATE
1			3		
2			4		

DocuSign Envelope ID: 2DD80076-633F-4FB7-BDAD-4A829D9C40C5

COMPUTED BY: M. GYANT DATE: 08/20/2019
CHECKED BY: A. CONRAD DATE: 08/20/2019

PROJECT REFERENCE NO.	SHEET NO.
B-5308	3B-1

STATE OF NORTH CAROLINA
DIVISION OF HIGHWAYS

NOTE: Invert Elevations are for Bid Purposes only and shall not be used for project construction stakeout.
See "Standard Specifications For Roads and Structures, Section 300-5".

LIST OF PIPES, ENDWALLS, ETC. (FOR PIPES 48" & UNDER)

STATION	LOCATION (LT,RT, OR CL)	STRUCTURE NO. FROM	STRUCTURE NO. TO	TOP ELEVATION	INVERT ELEVATION	INVERT ELEVATION	SLOPE CRITICAL	CLASS III R.C. PIPE (UNLESS NOTED OTHERWISE) 12"	15"	18"	24"	30"	36"	42"	48"	BITUMINOUS COATED C.S. PIPE TYPE B (UNLESS NOTED OTHERWISE) 12" .064	15" .064	18" .064	24" .064	30" .079	36" .079	42" .109	48" .109	CLASS III R.C. PIPE OR ALUMINIZED C.S. PIPE, TYPE IR OR HDPE PIPE, TYPE S OR D 12"	15"	18"	24"	30"	36"	42"	48"
21+01 -L-	RT	0401	—	136.40	—	—																									
		0401	402	—	133.65	130.50																			20'						
21+01 -L-	LT	0403	—	136.40	—	—																									
		0403	0404	—	133.65	131.00																			20'						
22+84 -L-	RT	0405	—	—	—	—																									
TOTALS																									40'						

STATION	15" SIDE DRAIN PIPE	18" SIDE DRAIN PIPE	24" SIDE DRAIN PIPE	ENDWALLS STD. 838.01, STD. 838.11 OR STD. 838.80 (UNLESS NOTED OTHERWISE) CU. YDS. R.C.P.	C.S.P.	QUANTITIES FOR DRAINAGE STRUCTURES PER EACH (0' THRU 5.0')	* TOTAL L.F. FOR PAY QUANTITY SHALL BE COL. 'A' + (1.3 X COL.'B') LIN. *FT. A 5.0' THRU 10.0'	B 10.0' AND ABOVE	C.B. STD. 840.01 OR STD. 840.02	FRAME, GRATES AND HOOD STANDARD 840.03 TYPE OF GRATE E	F	G	D.I. STD. 840.14 OR STD. 840.15	D.I. FRAME & GRATE STD. 840.16	G.D.I. TYPE "A" STD. 840.17 OR 840.26	G.D.I. TYPE "B" STD. 840.18 OR 840.27	G.D.I. TYPE "D" STD. 840.19 OR 840.28	G.D.I. FRAME WITH GRATE STD. 840.22	G.D.I. FRAME WITH TWO GRATES STD. 840.22	G.D.I. (N.S.) FRAME WITH GRATE STD. 840.24	G.D.I. (N.S.) FRAME WITH TWO GRATES STD. 840.24	J.B. STD. 840.31 OR 840.32	T.B.D.I (NS) WITH FRAME & TWO GRATES STD. 840.29	T.B. GRATED DI, TYPE "B" STD. 840.35				15" CSP PIPE ELBOW	CORR. STEEL ELBOWS NO. & SIZE	CONC. COLLARS CL. "B" C.Y. STD 840.72	CONC. & BRICK PIPE PLUG, C.Y. STD. 840.71	PIPE REMOVAL LIN.FT.	REMARKS
21+01 -L-						1																	1	1									
																												2					PIPE TO BE CSP WITH ELBOWS
21+01 -L-						1																	1	1									
																												2					PIPE TO BE CSP WITH ELBOWS
22+84 -L-	24'																															20'	
TOTALS	24'					2																	2	2				4				20'	

ABBREVIATIONS

C.B.	CATCH BASIN
N.D.I.	NARROW DROP INLET
D.I.	DROP INLET
G.D.I.	GRATED DROP INLET
G.D.I. (N.S.)	GRATED DROP INLET (NARROW SLOT)
J.B.	JUNCTION BOX
M.H.	MANHOLE
T.B.D.I.	TRAFFIC BEARING DROP INLET
T.B.J.B.	TRAFFIC BEARING JUNCTION BOX

"N" = DISTANCE FROM EDGE OF LANE TO FACE OF GUARDRAIL.
TOTAL SHOULDER WIDTH = DISTANCE FROM EDGE OF TRAVEL LANE TO SHOULDER BREAK POINT.
FLARE LENGTH = DISTANCE FROM LAST SECTION OF PARALLEL GUARDRAIL TO END OF GUARDRAIL.
W = TOTAL WIDTH OF FLARE FROM BEGINNING OF TAPER TO END OF GUARDRAIL.
G = GATING IMPACT ATTENUATOR TYPE 350
NG = NON-GATING IMPACT ATTENUATOR TYPE 350

GUARDRAIL SUMMARY

SURVEY LINE	BEG. STA.	END STA.	LOCATION	LENGTH STRAIGHT	LENGTH SHOP CURVED	LENGTH DOUBLE FACED	WARRANT POINT APPROACH END	WARRANT POINT TRAILING END	"N" DIST. FROM E.O.L.	TOTAL SHOULDER WIDTH	FLARE LENGTH APPROACH END	FLARE LENGTH TRAILING END	W APPROACH END	W TRAILING END	ANCHORS TYPE III	ANCHORS GREU TL-3	IMPACT ATTENUATOR TYPE 350 NO.	PERMITTED G	PERMITTED NG	REMOVE EXISTING GUARDRAIL	REMARKS
-L-	20+40.31	21+15.31	RT	75.00			21+15.31		5.42	8.42	50.00		1.00		1	1					
-L-	20+40.31	21+15.31	LT	75.00				21+15.31	5.42	8.42		50.00		1.00	1	1					
-L-	22+12.69	22+87.69	RT	75.00				22+12.69	5.42	8.42		50.00		1.00	1	1					
-L-	22+12.69	22+87.69	LT	75.00			22+12.69		5.42	8.42	50.00		1.00		1	1					
			SUBTOTALS	300											4	4					
			TYPE III, 4@18.75	-75																	
			TYPE TL-3, 4@50	-200																	
			PROJECT TOTALS	25											4	4					
			SAY	25											4	4					
	ADDITIONAL GUARDRAIL POSTS = 5 EA																				

6/21/08
SYSTIME
B5308_Rdy_psh_3B1

DocuSign Envelope ID: 2DD80076-633F-4FB7-BDAD-4A829D9C40C5

6/21/00

COMPUTED BY: M. GYANT DATE: 08/20/2019
CHECKED BY: A. CONRAD DATE: 08/20/2019

STATE OF NORTH CAROLINA
DIVISION OF HIGHWAYS

PROJECT REFERENCE NO.	SHEET NO.
B-5308	3B-2

SUMMARY OF EARTHWORK (CY)

LOCATION	UNCLASSIFIED EXCAVATION	UNDERCUT	EMBT + %	BORROW	WASTE
–L– 17+25.00 – 21+15.31	2		261	259	
–L– 22+12.69 – 25+50.00	8		218	210	
SUBTOTAL	10		479	469	
TOTAL	10		479	469	
PROJECT TOTAL	10		479	469	
EST. 5% TO REPLACE TOP SOIL ON BORROW PIT				23	
GRAND TOTAL	10		479	492	
SAY	25			500	

EST. DDE= 10 CY
SELECT GRANULAR MATERIAL= 600 CY
UNDERCUT= 300 CY

NOTE: Earthwork quantities are calculated by the Roadway Design Unit. These earthwork quantities are based in part on subsurface data provided by the Geotechnical Engineering Unit.

Note: Approximate quantities only. Unclassified Excavation, Borrow Excavation, Fine Grading, Clearing and Grubbing, and Removal of Existing Pavement will be paid for at the contract lump sum price for "Grading."

SUMMARY OF SHOULDER BERM GUTTER (LF)

SURVEY LINE	STATION	STATION	LENGTH
–L– RT	20+95.00	21+04.44	9.44
–L– LT	20+95.00	21+04.44	9.44
		TOTAL:	18.88
		SAY:	20

SUMMARY OF SUBSURFACE DRAINAGE (LF)

SURVEY LINE	STATION	STATION	LOCATION LT/RT/CL	DRAIN TYPE* UD/BD/SD	LF
CONTINGENCY				UD	200
				TOTAL:	200
				SAY:	200

*UD = UNDERDRAIN
*BD = BLIND DRAIN
*SD = SUBSURFACE DRAIN

SUMMARY OF PAVEMENT REMOVAL (SY)

LINE	STATION – STATION	LOCATION	REMOVAL (SY)
–L–	STA. 20+37.00 TO STA. 21+33.00	CL	212
–L–	STA. 22+02.34 TO STA. 23+10.00	CL	234
GRAND TOTAL			446
SAY			450

-SYSTIME-
-Topaz(Prg)\B5308_Rdy.psh_3B1
-USER-DOT-CHA

DocuSign Envelope ID: 2DD80076-633F-4FB7-BDAD-4A829D9C40C5

PROJECT REFERENCE NO.	SHEET NO.
B-5308	4
R/W SHEET NO.	

ROADWAY DESIGN ENGINEER: NORTH CAROLINA PROFESSIONAL ENGINEER SEAL 033400, 10/10/2019, Designed by: CONRAD J. KEISER, Checked by: CONRAD J. KEISER

HYDRAULICS ENGINEER: NORTH CAROLINA PROFESSIONAL ENGINEER SEAL 046226, 10/10/2019, Designed by: ANTHONY M. PATSKOSKI, Checked by: ANTHONY M. PATSKOSKI

CDM Smith — CDM Smith Inc, 5400 Glenwood Avenue, Suite 400, Raleigh, NC 27612-3228, NC CDA No. F-1255

SUMMIT — Summit Design and Engineering Services, 504 Meadowland Drive, Hillsborough NC 27278, NC FIRM LICENSE No: P-0339

DOCUMENT NOT CONSIDERED FINAL UNLESS ALL SIGNATURES COMPLETED

BRIDGE PAVEMENT RELATIONSHIP SKETCH –L–

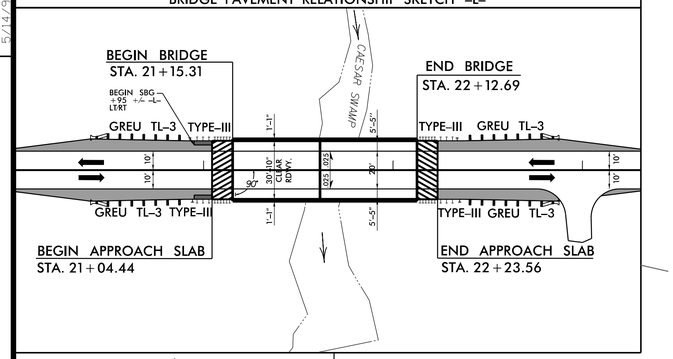

–L–	
PI Sta 17+65.41	PI Sta 24+74.61
Δ = 19° 42' 21.1" (RT)	Δ = 7° 21' 12.1" (LT)
D = 5° 59' 58.4"	D = 3° 30' 15.6"
L = 328.46'	L = 209.84'
T = 165.87'	T = 105.06'
R = 955.00'	R = 1,635.00'
E = 0.06	E = 0.05
RUNOFF = 120'	RUNOFF = 100'
DS = 50 mph	DS = 50 mph

DETAIL 4–1
LATERAL BASE DITCH
(Not to Scale)

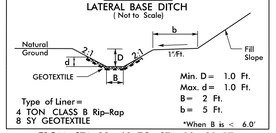

FROM STA. 22+68 TO STA. 22+89 RT
EST. DDE= 10 CY

NAD 83/NA 2011

SEE BRIDGE PAVEMENT RELATIONSHIP SKETCH FOR GUARDRAIL, ANCHOR UNITS, END UNITS, AND SHOULDER BERM GUTTER.

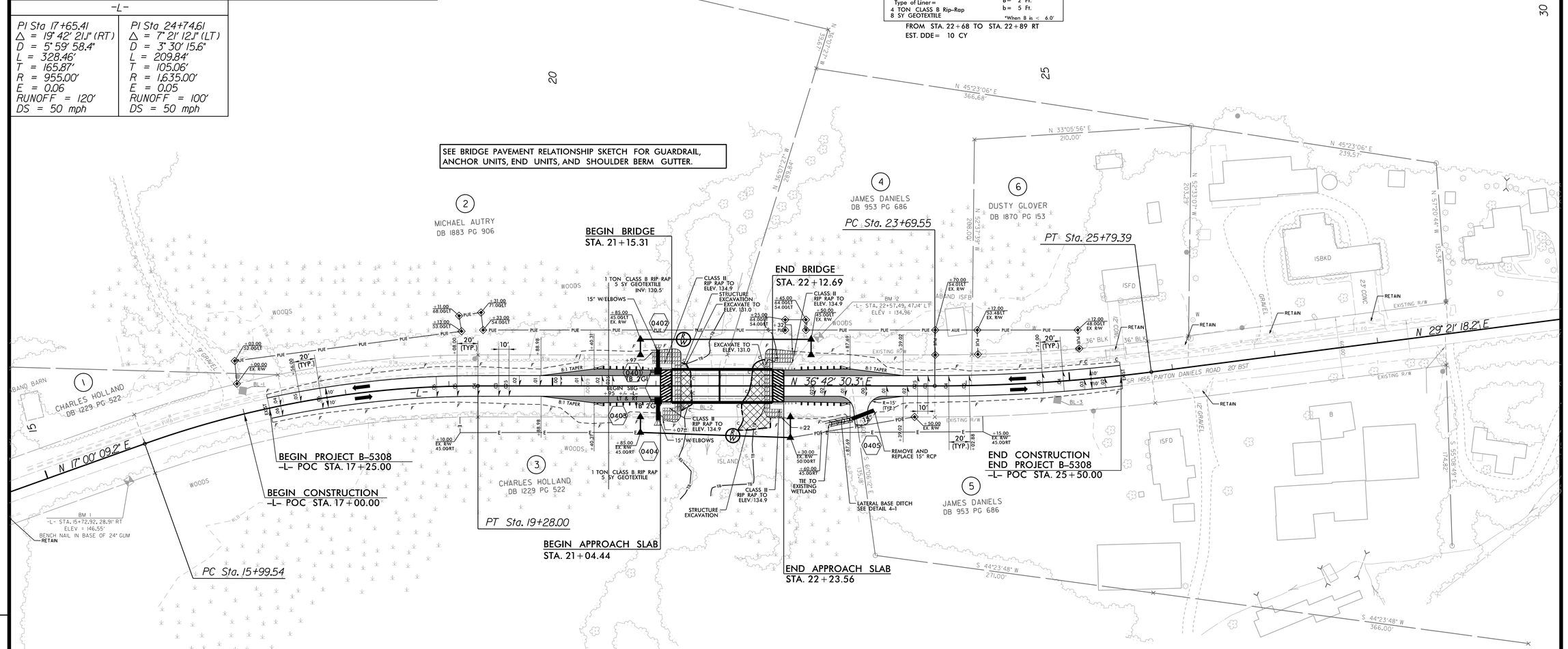

REVISIONS

01/11/19 – R/W REVISIONS: PARCELS 4 AND 6, CHANGED PERMANENT UTILITY EASEMENT TO BE AERIAL UTILITY EASEMENT FROM STA. 23+70.00 TO STA. 24+12.00. – DZK

5/14/99

SYSTIME
\R-Proj\B5308_Rdy_psh_4
USER: PAYNEAN

50 25 0 50 100
PLANS

NOTE: SEE SHEET 5 FOR –L– PROFILE

DocuSign Envelope ID: 2DD80076-633F-4FB7-BDAD-4A829D9C40C5

PROJECT REFERENCE NO.	SHEET NO.
B-5308	5

ROADWAY DESIGN ENGINEER
NORTH CAROLINA 10/10/2019 SEAL 033400
DocuSigned by: 7D4A7E1B4E8E4E8... 10/10/2019 | 8:25 AM EDT
E-SIGNATURE NOT LEGAL UNTIL SEALED

HYDRAULICS ENGINEER
NORTH CAROLINA 10/10/2019 SEAL 046226
DocuSigned by: 9F2B2A4... 10/10/2019 | 10:11 AM EDT
E-SIGNATURE NOT LEGAL UNTIL SEALED

CDM Smith — CDM Smith Inc. 5400 Glenwood Avenue Suite 400 Raleigh, NC 27612-3228 NC COA No. F-1255

SUMMIT — Summit Design and Engineering Services 504 Meadowland Drive Hillsborough, NC 27278 NC FIRM LICENSE No: P-0339

DOCUMENT NOT CONSIDERED FINAL UNLESS ALL SIGNATURES COMPLETED

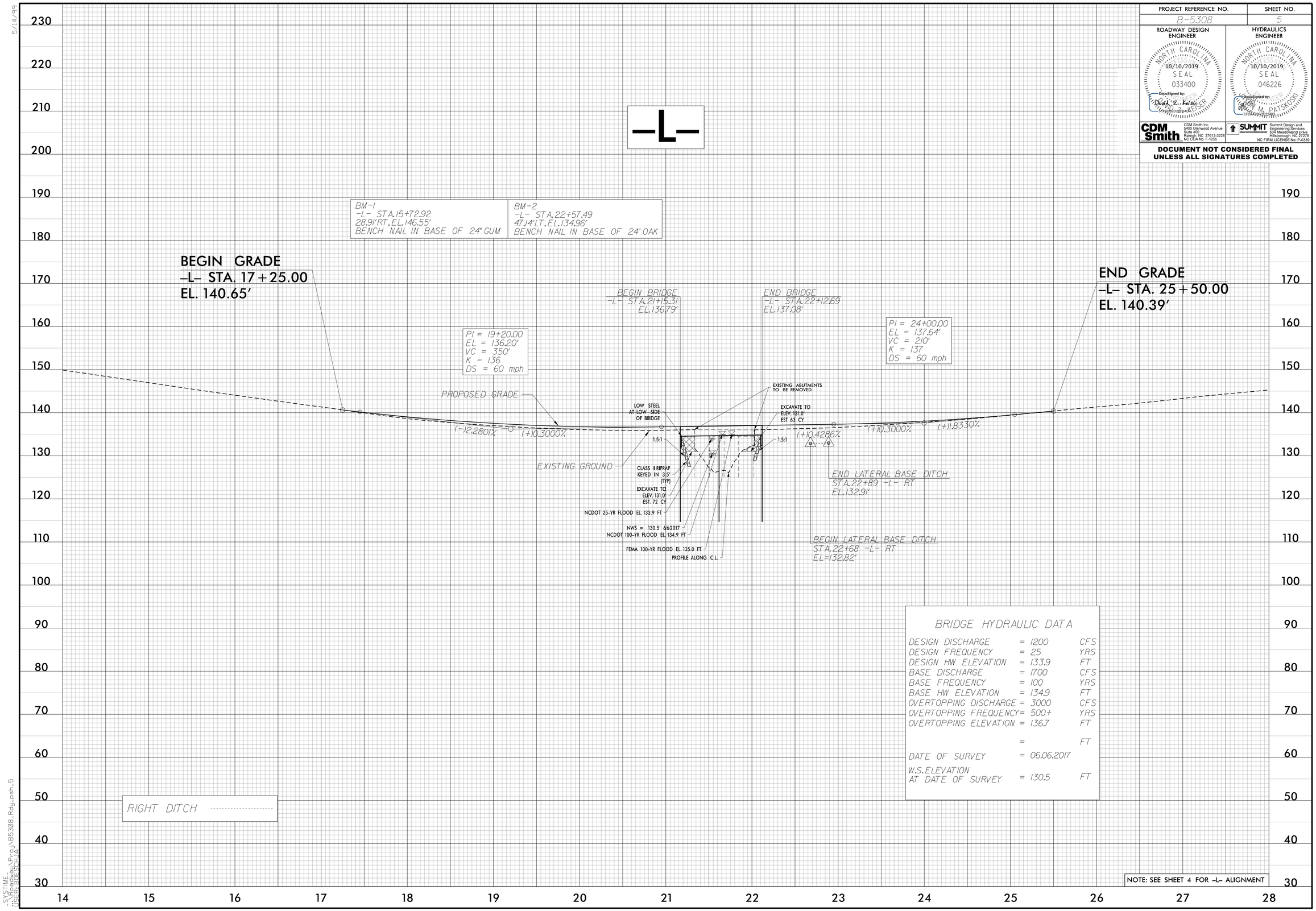

BRIDGE HYDRAULIC DATA

DESIGN DISCHARGE	= 1200	CFS
DESIGN FREQUENCY	= 25	YRS
DESIGN HW ELEVATION	= 133.9	FT
BASE DISCHARGE	= 1700	CFS
BASE FREQUENCY	= 100	YRS
BASE HW ELEVATION	= 134.9	FT
OVERTOPPING DISCHARGE	= 3000	CFS
OVERTOPPING FREQUENCY	= 500+	YRS
OVERTOPPING ELEVATION	= 136.7	FT
	=	FT
DATE OF SURVEY	= 06.06.2017	
W.S. ELEVATION AT DATE OF SURVEY	= 130.5	FT

NOTE: SEE SHEET 4 FOR -L- ALIGNMENT

5/14/99

SYSTIME = 5/14/99 USER: BOPSCHIA

DocuSign Envelope ID: 21AC8CFC-DA9C-498B-99F0-0F104E9B86C7

STATE OF NORTH CAROLINA
DIVISION OF HIGHWAYS

TRANSPORTATION MANAGEMENT PLAN

SAMPSON COUNTY

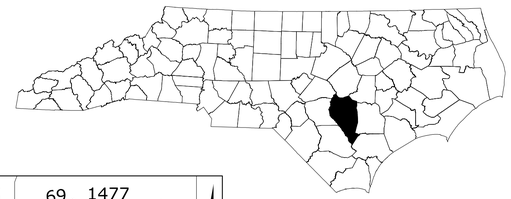

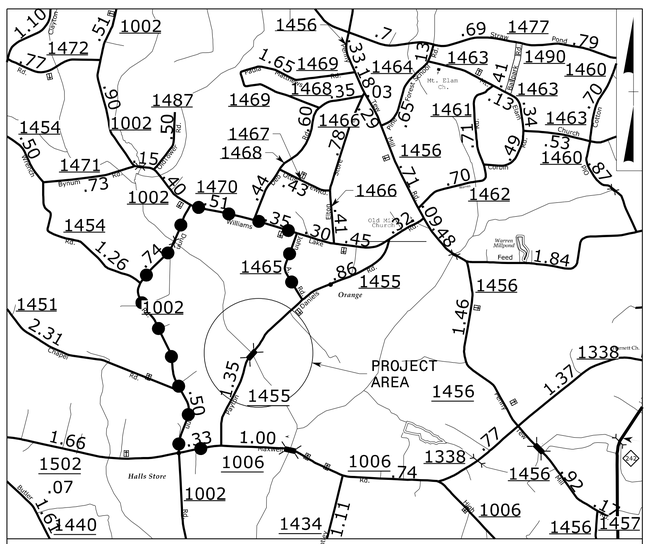

VICINITY MAP

DETOUR ROUTE ●●●●

N.T.S.

LOCATION: REPLACE BRIDGE 152 OVER CAESAR SWAMP ON SR 1455 (PAYTON DANIELS ROAD)

INDEX OF SHEETS

SHEET NO.	TITLE
TMP-1	TITLE SHEET, VICINITY MAP AND INDEX OF SHEETS
TMP-1A	LIST OF APPLICABLE ROADWAY STANDARD DRAWINGS, AND LEGEND
TMP-1B	TRANSPORTATION OPERATIONS PLAN: (MANAGEMENT STRATEGIES, GENERAL NOTES AND LOCAL NOTES)
TMP-2	OFF-SITE DETOUR
TMP-3	SIGN DESIGN

SHEET NO.
TMP-1

PROJECT: B-5308

WORK ZONE SAFETY & MOBILITY
"from the MOUNTAINS to the COAST"

PLANS PREPARED BY:

ADAM CONRAD, P.E.

MONIQUE GYANT, E.I.

NCDOT CONTACTS:

J. S. KITE, P.E.
PROJECT ENGINEER

MATTHEW SPRINGER, P.E.
PROJECT DESIGN ENGINEER

CDM Smith
CDM Smith Inc.
5400 Glenwood Avenue
Suite 400
Raleigh, NC 27612-3228
NC COA No. F-1255

DIVISION OF HIGHWAYS · STATE OF NORTH CAROLINA · DEPARTMENT OF TRANSPORTATION · WORK ZONE TRAFFIC CONTROL

DOCUMENT NOT CONSIDERED FINAL UNLESS ALL SIGNATURES COMPLETED

APPROVED:

DATE: 10/10/2019

SEAL

NORTH CAROLINA PROFESSIONAL SEAL 043767 ENGINEER

DocuSigned by:
Adam M. Conrad
5E1C0A0A0A0A4D3...

10/10/2019
PW:\\cdpw.cdmsmith.com:PW_PLN\Documents\117240\219637\10 Transportation\04 Client Folder Structure\B-5308\Traffic\TrafficControl\TCP\B5308_TMP_TC01.dgn
User:BOTCSCHJA

DocuSign Envelope ID: 21AC8CFC-DA9C-498B-99F0-0F104E9B86C7

PROJ. REFERENCE NO.	SHEET NO.
B-5308	TMP-1A

ROADWAY STANDARD DRAWINGS

THE FOLLOWING ROADWAY STANDARDS AS SHOWN IN "ROADWAY STANDARD DRAWINGS" - PROJECT SERVICES UNIT - N.C. DEPARTMENT OF TRANSPORTATION - RALEIGH, N.C., DATED JANUARY 2018 ARE APPLICABLE TO THIS PROJECT AND BY REFERENCE HEREBY ARE CONSIDERED A PART OF THESE PLANS:

STD. NO.	TITLE
1101.03	TEMPORARY ROAD CLOSURES
1101.11	TRAFFIC CONTROL DESIGN TABLES
1110.01	STATIONARY WORK ZONE SIGNS
1145.01	BARRICADES

LEGEND

GENERAL

- DIRECTION OF TRAFFIC FLOW
- DIRECTION OF PEDESTRIAN TRAFFIC FLOW
- EXIST. PVMT.
- NORTH ARROW
- PROPOSED PVMT.
- TEMP. SHORING (LOCATION PURPOSES ONLY)

SIGNALS

- EXISTING
- PROPOSED
- TEMPORARY

PAVEMENT MARKINGS

- EXISTING LINES
- TEMPORARY LINES

TRAFFIC CONTROL DEVICES

- BARRICADE (TYPE III)
- CONE
- DRUM
- SKINNY DRUM
- TUBULAR MARKER
- TEMPORARY CRASH CUSHION
- FLASHING ARROW BOARD
- FLAGGER
- LAW ENFORCEMENT
- TRUCK MOUNTED ATTENUATOR (TMA)
- CHANGEABLE MESSAGE SIGN

TEMPORARY SIGNING

- PORTABLE SIGN
- STATIONARY SIGN
- STATIONARY OR PORTABLE SIGN

PAVEMENT MARKERS

- CRYSTAL/CRYSTAL
- CRYSTAL/RED
- YELLOW/YELLOW

PAVEMENT MARKING SYMBOLS

- PAVEMENT MARKING SYMBOLS

CDM Smith
CDM Smith Inc.
5400 Glenwood Avenue
Suite 400
Raleigh, NC 27612-3228
NC COA No. F-1255

APPROVED:

DATE: 10/10/2019

SEAL

NORTH CAROLINA PROFESSIONAL SEAL 043767 ENGINEER

DocuSigned by: Adam M. Lunsford 312C2BC0C6A2...

DOCUMENT NOT CONSIDERED FINAL UNLESS ALL SIGNATURES COMPLETED

DIVISION OF HIGHWAYS · STATE OF NORTH CAROLINA · DEPARTMENT OF TRANSPORTATION · WORK ZONE TRAFFIC CONTROL

ROADWAY STANDARD DRAWINGS & LEGEND

10/10/2019
PW:\\pw.cdmsmith.com:PW_PL\Documents\117240\21963710 Transportation\04 Client Folder Structure\B-5308\Traffic\TrafficControl\TCP\B5308_TMP_TC01A.dgn
User:BOECSCHJA

DocuSign Envelope ID: 21AC8CFC-DA9C-498B-99F0-0F104E9B86C7

PROJ. REFERENCE NO.	SHEET NO.
B-5308	TMP-1B

MANAGEMENT STRATEGIES

1- CLOSE SR 1455 (PAYTON DANIELS ROAD) TO TRAFFIC AND DETOUR TRAFFIC OFF-SITE.

2- LOCAL ACCESS TO ALL RESIDENCES AND BUSINESSES WILL BE MAINTAINED BETWEEN CLOSURE POINTS AT ALL TIMES DURING CONSTRUCTION.

PHASING

STEP 1: USING RSD 1101.03 (SHEET 1 OF 9), INSTALL DETOUR ROUTE SIGNING TO CLOSE SR 1455 (PAYTON DANIELS ROAD) FROM STA. 17+25+/- TO STA. 25+50+/- -L-.

STEP 2: AWAY FROM TRAFFIC, COMPLETE CONSTRUCTION OF PROPOSED BRIDGE AND ROADWAY APPROACHES, INCLUDING DRAINAGE, GUARDRAIL, FINAL PAVEMENT MARKINGS AND MARKERS ON PROPOSED -L- FROM STA. 17+25+/- TO STA. 25+50+/-.

STEP 3: REMOVE TEMPORARY TRAFFIC CONTROL DEVICES AND OPEN -L- TO PROPOSED 2-LANE, 2-WAY TRAFFIC PATTERN.

GENERAL NOTES

CHANGES MAY BE REQUIRED WHEN PHYSICAL DIMENSIONS IN THE DETAIL DRAWINGS, STANDARD DETAILS, AND ROADWAY DETAILS ARE NOT ATTAINABLE TO MEET FIELD CONDITIONS OR RESULT IN DUPLICATE OR UNDESIRED OVERLAPPING OF DEVICES. MODIFICATION MAY INCLUDE: MOVING, SUPPLEMENTING, COVERING, OR REMOVAL OF DEVICES AS DIRECTED BY THE ENGINEER.

THE FOLLOWING GENERAL NOTES APPLY AT ALL TIMES FOR THE DURATION OF THE CONSTRUCTION PROJECT EXCEPT WHEN OTHERWISE NOTED IN THE PLAN OR DIRECTED BY THE ENGINEER.

TRAFFIC PATTERN ALTERATIONS

A) NOTIFY THE ENGINEER THIRTY (30) CALENDAR DAYS PRIOR TO ANY TRAFFIC PATTERN ALTERATION.

SIGNING

B) INSTALL ADVANCE WORK ZONE WARNING SIGNS WHEN WORK IS WITHIN 40 FT FROM THE EDGE OF TRAVEL LANE AND NO MORE THAN THREE (3) DAYS PRIOR TO THE BEGINNING OF CONSTRUCTION.

C) PROVIDE SIGNING AND DEVICES REQUIRED TO CLOSE THE ROAD ACCORDING TO THE ROADWAY STANDARD DRAWINGS AND TRAFFIC CONTROL PLANS.

PROVIDE SIGNING REQUIRED FOR THE OFF-SITE DETOUR ROUTE AS SHOWN IN THE TRAFFIC CONTROL PLANS.

D) COVER OR REMOVE ALL SIGNS AND DEVICES REQUIRED TO CLOSE THE ROAD WHEN ROAD CLOSURE IS NOT IN OPERATION.

COVER OR REMOVE ALL SIGNS REQUIRED FOR THE OFF-SITE DETOUR WHEN THE DETOUR IS NOT IN OPERATION.

E) ENSURE ALL NECESSARY SIGNING IS IN PLACE PRIOR TO ALTERING ANY TRAFFIC PATTERN.

TRAFFIC CONTROL DEVICES

F) PLACE TYPE III BARRICADES, WITH "ROAD CLOSED" SIGN R11-2 ATTACHED, OF SUFFICIENT LENGTH TO CLOSE ENTIRE ROADWAY.

LOCAL NOTES

1- NOTIFY SAMPSON COUNTY EMERGENCY SERVICES AND PUBLIC SCHOOLS AT LEAST ONE MONTH PRIOR TO ROAD CLOSURE.

CDM Smith
CDM Smith Inc.
5400 Glenwood Avenue
Suite 400
Raleigh, NC 27612-3228
NC COA No. F-1255

APPROVED: _____

DATE: 10/10/2019

SEAL

NORTH CAROLINA PROFESSIONAL SEAL 043767 ENGINEER

Docusigned by: Diane M. Conrad
DIANE M. CONRAD

DOCUMENT NOT CONSIDERED FINAL UNLESS ALL SIGNATURES COMPLETED

DIVISION OF HIGHWAYS · STATE OF NORTH CAROLINA · DEPARTMENT OF TRANSPORTATION · WORK ZONE TRAFFIC CONTROL

TRANSPORTATION OPERATIONS PLAN

10/10/2019
pw:\\pw.cdmsmith.com:PW_PLN\Documents\117240\219637\10 Transportation\04 Client Folder Structure\B-5308\Traffic\TrafficControl\TCP\B5308_TMP_TC01B.dgn
User:BOESCHJA

DocuSign Envelope ID: 21AC8CFC-DA9C-498B-99F0-0F104E9B86C7

PROJ. REFERENCE NO.	SHEET NO.
B-5308	TMP-2

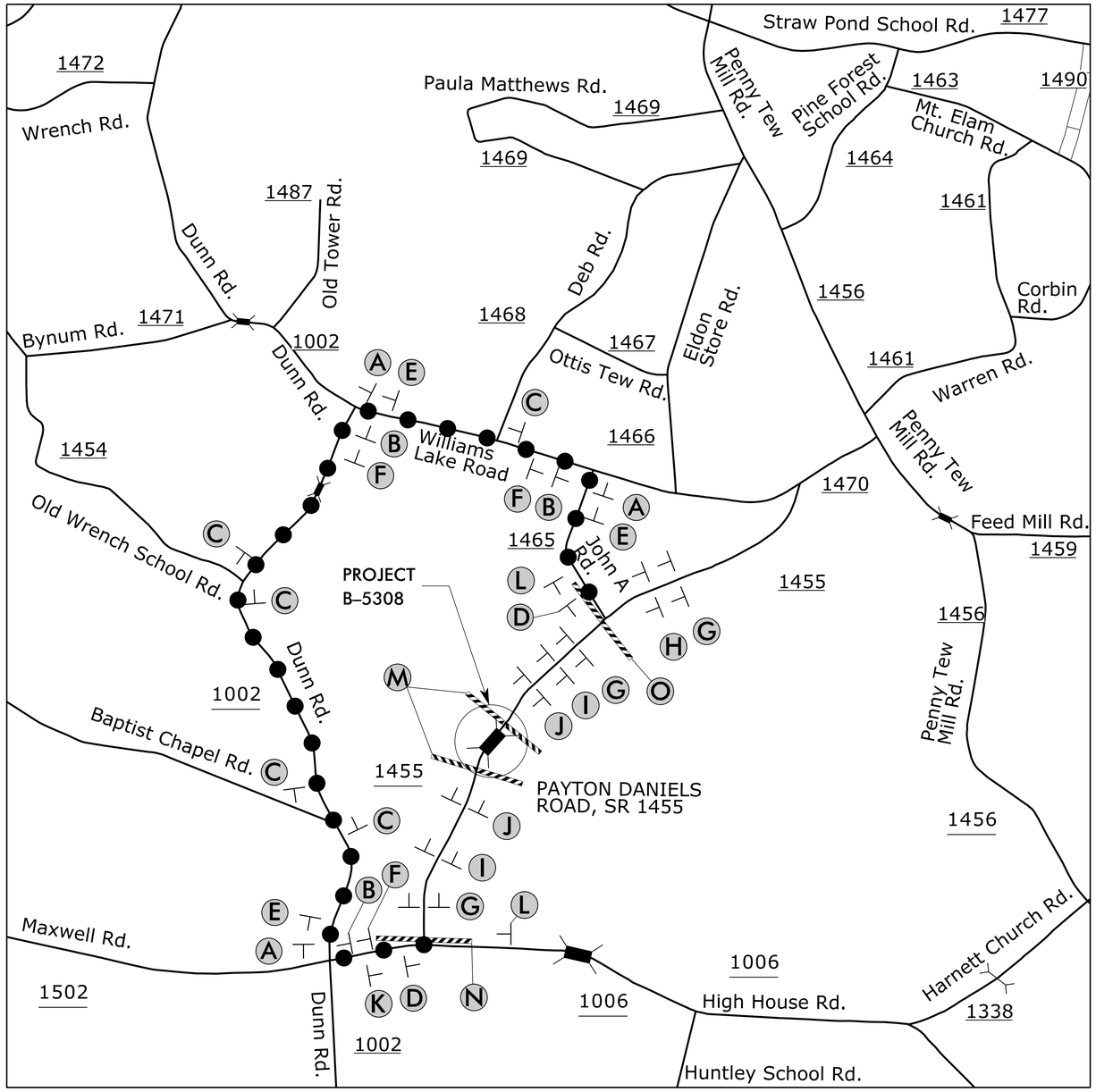

OFF-SITE DETOUR ROUTE

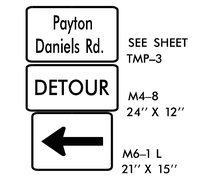

A

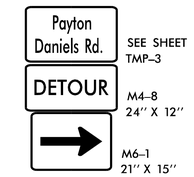

B

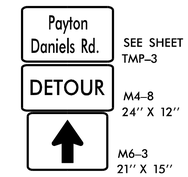

C

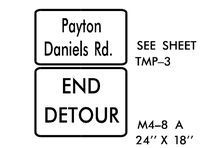

D

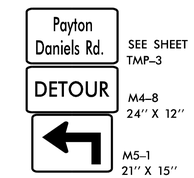

E

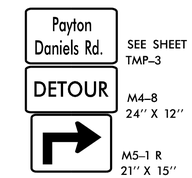

F

G

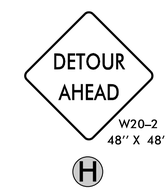

H

I

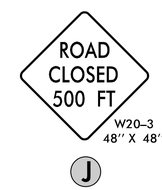

J

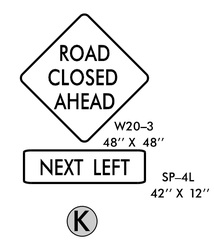

K

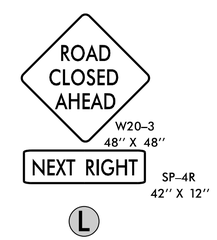

L

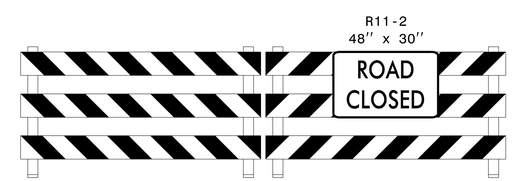

TYPE III BARRICADE(S)

M

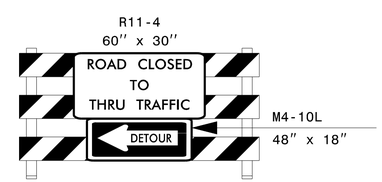

N

TYPE III BARRICADE

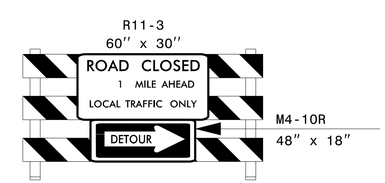

O

TYPE III BARRICADE

APPROVED:

DATE: 10/10/2019

SEAL

NORTH CAROLINA PROFESSIONAL SEAL 043767 ENGINEER

DocuSigned by:

DOCUMENT NOT CONSIDERED FINAL UNLESS ALL SIGNATURES COMPLETED

DIVISION OF HIGHWAYS STATE OF NORTH CAROLINA DEPARTMENT OF TRANSPORTATION WORK ZONE TRAFFIC CONTROL

OFF-SITE DETOUR

CDM Smith
CDM Smith Inc.
5400 Glenwood Avenue
Suite 400
Raleigh, NC 27612-3228
NC COA No. F-1255

10/10/2019
pw:\\pw.cdmsmith.com:PW_PLN\Documents\117240\219637\10 Transportation\04 Client Folder Structure\B-5308\Traffic\TrafficControl\TCP\B5308_TMP_TC02.dgn
User:BOESCHJA

DocuSign Envelope ID: 21AC8CFC-DA9C-498B-99F0-0F104E9B86C7

PROJ. REFERENCE NO.	SHEET NO.
B-5308	TMP-3

SIGN NUMBER: 1
TYPE: STATIONARY
QUANTITY: SEE PLANS

BACKG COLOR: Orange
COPY COLOR: Black

SYMBOL	X	Y	WID	HT

SIGN WIDTH: 3′-0″
HEIGHT: 1′-6″
TOTAL AREA: 4.5 Sq.Ft.

BORDER TYPE: FLUSH
RECESS: 0.38″
WIDTH: 0.5″
RADII: 1.5″

NO. Z BARS:
LENGTH:

MAT′L: 0.063″ (1.6 mm) ALUMINUM

DESIGN BY: JCC
CHECKED BY: AMC
Jan 19, 2018
PROJECT ID: B-5308
LOCATION: SAMPSON
DIV: 3

USE NOTES:

1. Legend and border(except those that are colored black) shall be direct applied Grade B sheeting.
2. Background shall be Grade B reflective sheeting.
3. Shields; A, B, and C type arrows shall be on 0.032″ (0.8mm) aluminum and demountable.
4. Bottom panel shall be yellow Grade C sheeting. Legend shall be direct applied black non-reflective sheeting. Yellow panel is:

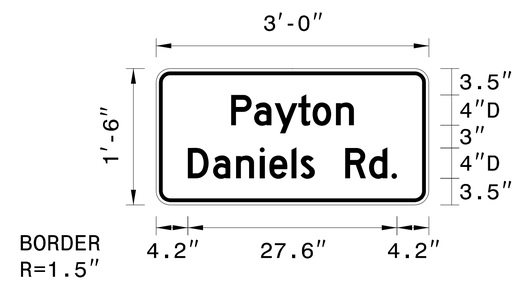

BORDER
R=1.5″
TH=0.5″
IN=0.38″

Panel Style: Traffic Control.ssi
M.U.T.C.D.: 2009 Edition

Spacing Factor is 1 unless specified otherwise

LETTER POSITIONS

Letter locations are panel edge to lower left corner

																											Series/Size Text Length
	P	a	y	t	o	n																					D 2000
	9.9	12.9	15.7	18.8	20.7	23.7																					16.2
	D	a	n	i	e	l	s		R	d	.																D 2000
	4.2	7.5	10.6	13.7	15	17.9	19.1	21	25	28.1	31.1																27.6

FILENAME: B5308_TMP_TC03

NORTH CAROLINA D.O.T. SIGN DETAIL

CDM Smith
CDM Smith Inc.
5400 Glenwood Avenue
Suite 400
Raleigh, NC 27612-3228
NC COA No. F-1255

APPROVED:
DATE: 10/10/2019
SEAL
NORTH CAROLINA PROFESSIONAL SEAL 043767 ENGINEER
DocuSigned by: Adam M. Cuccaro
3122C2B0A4D4D...

DOCUMENT NOT CONSIDERED FINAL UNLESS ALL SIGNATURES COMPLETED

DIVISION OF HIGHWAYS · STATE OF NORTH CAROLINA · DEPARTMENT OF TRANSPORTATION · WORK ZONE TRAFFIC CONTROL

SIGN DESIGN

10/10/2019
pw:\\pw.cdmsmith.com:PW_PLN\Documents\117240\29637\10 Transportation\04 Client Folder Structure\B-5308\Traffic\TrafficControl\TCP\B5308_TMP_TC03.dgn
User:BOESCHJA

DocuSign Envelope ID: 88C8B7C1-1765-4CA3-80AF-DC96D47897B4

PROJECT: B-5308

TIP NO.	SHEET NO.
B-5308	PMP-1

APPROVED: _____

DATE: _____

SEAL

NORTH CAROLINA PROFESSIONAL SEAL 043767 ENGINEER ADAM M. CONRAD

10/23/2019

DocuSigned by: Adam M. Conrad 312C25CC7320E4E1...

DOCUMENT NOT CONSIDERED FINAL UNLESS ALL SIGNATURES COMPLETED

CDM Smith
CDM Smith Inc.
5400 Glenwood Avenue
Suite 400
Raleigh, NC 27612-3228
NC COA No. F-1255

STATE OF NORTH CAROLINA
DEPARTMENT OF TRANSPORTATION

PAVEMENT MARKING PLAN

SAMPSON COUNTY

LOCATION: SR 1455 (PAYTON DANIELS ROAD) OVER CAESAR SWAMP

ROADWAY STANDARD DRAWING

THE FOLLOWING ROADWAY STANDARDS AS APPEAR IN "ROADWAY STANDARD DRAWINGS" - PROJECT SERVICES UNIT - N.C. DEPARTMENT OF TRANSPORTATION - RALEIGH, N.C., DATED JANUARY 2018 ARE APPLICABLE TO THIS PROJECT AND BY REFERENCE HEREBY ARE CONSIDERED A PART OF THESE PLANS:

STD. NO.	TITLE
1205.01	PAVEMENT MARKINGS - LINE TYPES AND OFFSETS
1205.02	PAVEMENT MARKINGS - TWO-LANE AND MULTILANE ROADWAYS
1205.12	PAVEMENT MARKINGS - BRIDGES
1250.01	RAISED PAVEMENT MARKERS - INSTALLATION SPACING
1251.01	RAISED PAVEMENT MARKERS - PERMANENT AND TEMPORARY
1261.01	GUARDRAIL AND BARRIER DELINEATORS - INSTALLATION SPACING
1261.02	GUARDRAIL AND BARRIER DELINEATORS - TYPES AND MOUNTING
1262.01	GUARDRAIL END DELINEATION

GENERAL NOTES

THE FOLLOWING GENERAL NOTES APPLY AT ALL TIMES FOR THE DURATION OF THE CONSTRUCTION PROJECT, EXCEPT WHEN OTHERWISE NOTED IN THE PLAN, OR DIRECTED BY THE ENGINEER.

A) INSTALL PAVEMENT MARKINGS AND PAVEMENT MARKERS ON THE FINAL SURFACE AS FOLLOWS:

ROAD NAME	MARKING	MARKER
PAYTON DAINELS ROAD	THERMOPLASTIC	PERMANENT RAISED

B) PLACE ONE APPLICATION OF THERMOPLASTIC PAVEMENT MARKINGS ON THE FINAL WEARING SURFACE.

C) TIE PROPOSED PAVEMENT MARKING LINES TO EXISTING PAVEMENT MARKING LINES.

D) REMOVE/REPLACE ANY CONFLICTING/DAMAGED PAVEMENT MARKINGS AND MARKERS.

E) MARKERS SHALL BE INSTALLED ACCORDING TO THE NCDOT ROADWAY STANDARD DRAWING 1250.01.

SUMMARY OF QUANTITIES

ITEM NO. DESC. NO.	ITEM NO. SECT. NO.	ITEM DESCRIPTION	QUANTITY	UNIT
4685000000	1205	THERMOPLASTIC PAVEMENT MARKING LINES (4", 90 MILS)	3300	L.F.
4900000000	1251	PERMANENT RAISED PAVEMENT MARKERS	15	EA.

INDEX

SHEET NO.	DESCRIPTION
PMP-1	PAVEMENT MARKING PLAN TITLE SHEET
PMP-2	PAVEMENT MARKING DETAIL

PLAN PREPARED BY: CDM SMITH, INC.

DAVID Z. KEISER, P. E. — PROJECT MANAGER

ADAM M. CONRAD, P. E. — PROJECT DESIGN ENGINEER

CDM Smith
CDM Smith Inc.
5400 Glenwood Avenue
Suite 400
Raleigh, NC 27612-3228
NC COA No. F-1255

PLAN REVIEWED BY: N.C.D.O.T. DIVISION 3

JESSI LEONARD, P.E. — DIVISION TRAFFIC ENGINEER

KEVIN G. BOWEN, P.E. — DIVISION CONSTRUCTION ENGINEER

STATE OF NORTH CAROLINA DEPARTMENT OF TRANSPORTATION

SYSTIME = 10:24:00
CADD: B5308_TMP_PM01.dgn
USER: TIMWRAY

DocuSign Envelope ID: 88C8B7C1-1765-4CA3-80AF-DC96D47897B4

TIP NO.	SHEET NO.
B-5308	PMP-2

APPROVED: _____

DATE: _____

SEAL

NORTH CAROLINA PROFESSIONAL SEAL 043767 ENGINEER ADAM M. CONRAD

10/2[illegible]/2029

DocuSigned by: Adam M. Conrad 3122C25CC7320AE...

DOCUMENT NOT CONSIDERED FINAL UNLESS ALL SIGNATURES COMPLETED

CDM Smith
CDM Smith Inc.
5400 Glenwood Avenue
Suite 400
Raleigh, NC 27612-3228
NC COA No. F-1255

PAVEMENT MARKING SCHEDULE

SYMBOL	DESCRIPTION
THERMO(4", 90 MILS)	
TA	WHITE EDGELINE
TI	YELLOW DOUBLE CENTER
PERMANENT RAISED PAVEMENT MARKERS	
MA	YELLOW & YELLOW

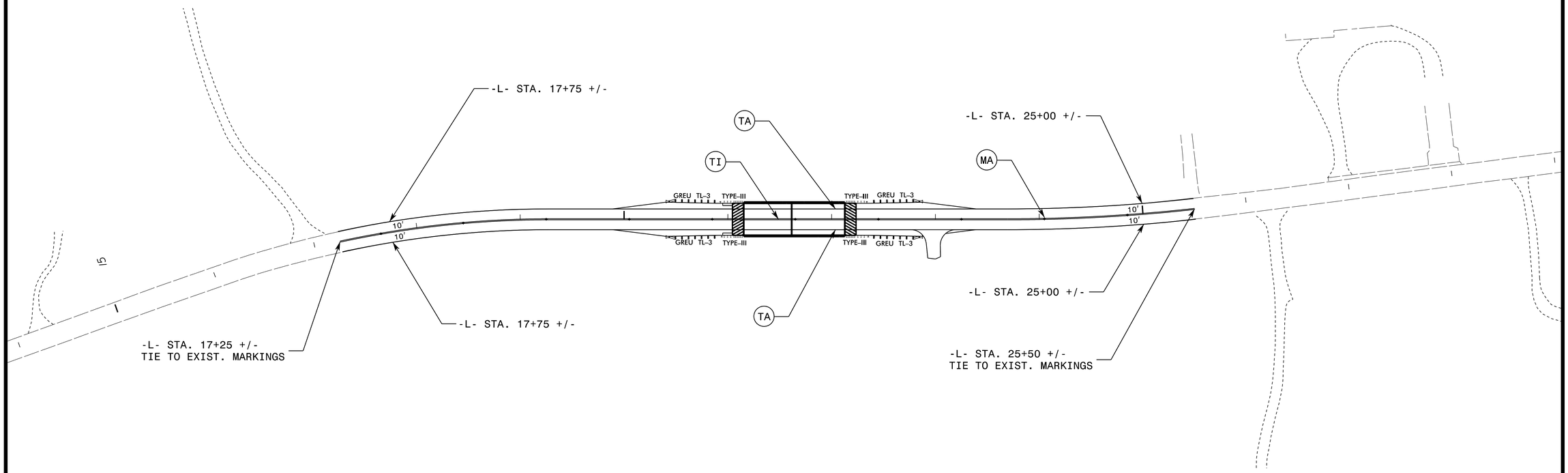

PAVEMENT MARKING DETAIL

SYSTIME
CADD:B5308_TMP_PM02.dgn
SEP-17-2020/AM

TIP PROJECT: B-5308

STATE	STATE PROJECT REFERENCE NO.	SHEET NO.	TOTAL SHEETS
N.C.	B-5308	EC-1	

STATE PROJ. NO.	F.A. PROJ. NO.	DESCRIPTION
17BP.3.R.79	N/A	P.E.
17BP.3.R.79	N/A	ROW/UTIL.
17BP.3.R.79	N/A	CONST.

STATE OF NORTH CAROLINA
DIVISION OF HIGHWAYS

PLAN FOR PROPOSED
HIGHWAY EROSION CONTROL

SAMPSON COUNTY

LOCATION: REPLACE BRIDGE 152 OVER CAESAR SWAMP
ON SR 1455 (PAYTON DANIELS ROAD)
TYPE OF WORK: GRADING, DRAINAGE, PAVING, SIGNING AND STRUCTURE

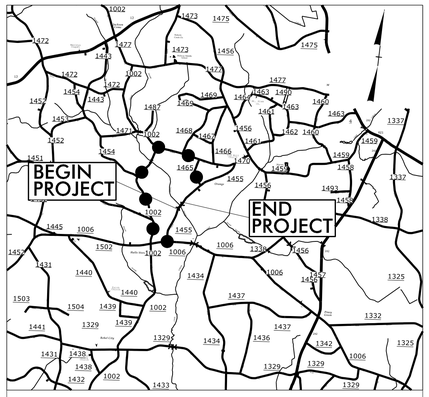

VICINITY MAP
DETOUR ROUTE
N.T.S.

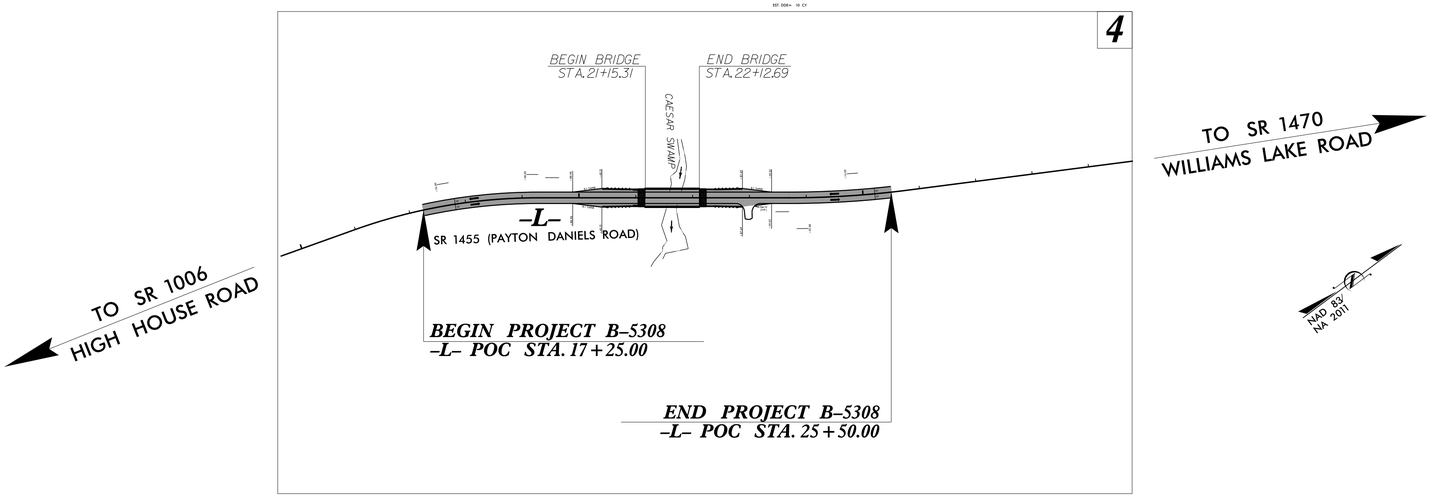

EROSION AND SEDIMENT CONTROL MEASURES

Std. #	Description	Symbol
1630.03	Temporary Silt Ditch	TSD
1630.05	Temporary Diversion	TD
1605.01	Temporary Silt Fence	
1606.01	Special Sediment Control Fence	
1622.01	Temporary Berms and Slope Drains	
1630.02	Silt Basin Type B	
1633.01	Temporary Rock Silt Check Type-A	
	Temporary Rock Silt Check Type-A with Matting and Polyacrylamide (PAM)	
1633.02	Temporary Rock Silt Check Type-B	
	Wattle/ Coir Fiber Wattle	EW / CFW
	Wattle/ Coir Fiber Wattle with Polyacrylamide (PAM)	
1634.01	Temporary Rock Sediment Dam Type-A	
1634.02	Temporary Rock Sediment Dam Type-B	
1635.01	Rock Pipe Inlet Sediment Trap Type-A	
1635.02	Rock Pipe Inlet Sediment Trap Type-B	
1630.04	Stilling Basin	
1630.06	Special Stilling Basin	
	Rock Inlet Sediment Trap:	
1632.01	Type A	A
1632.02	Type B	B
1632.03	Type C	C
	Skimmer Basin	
	Tiered Skimmer Basin	
	Infiltration Basin	

THIS PROJECT CONTAINS EROSION CONTROL PLANS FOR CLEARING AND GRUBBING PHASE OF CONSTRUCTION.

GRAPHIC SCALE

0
PLANS

0
PROFILE (HORIZONTAL)

0
PROFILE (VERTICAL)

THESE EROSION AND SEDIMENT CONTROL PLANS COMPLY WITH THE REGULATIONS SET FORTH BY THE NCG-010000 GENERAL CONSTRUCTION PERMIT EFFECTIVE AUGUST 1, 2016 AND ISSUED BY THE NORTH CAROLINA DEPARTMENT OF ENVIRONMENTAL QUALITY DIVISION OF WATER RESOURCES.

Prepared in the Office of:

SUMMIT DESIGN AND ENGINEERING SERVICES
Summit Design and Engineering Services
504 Meadowland Drive
Hillsborough, NC 27278
NC FIRM LICENSE No: P-0339

Designed by:

Jason Patskoski — NAME
4069 — LEVEL III CERTIFICATION NO.

Reviewed in the Office of:

ROADSIDE ENVIRONMENTAL UNIT
1 South Wilmington St.
Raleigh, NC 27611

2018 STANDARD SPECIFICATIONS

Reviewed by:

Mark Staley, CPESC, CPSWQ

Roadway Standard Drawings

The following roadway english standards as appear in "Roadway Standard Drawings"– Roadway Design Unit – N. C. Department of Transportation – Raleigh, N. C., dated January 2018 and the latest revison thereto are applicable to this project and by reference hereby are considered a part of these plans.

1604.01	Railroad Erosion Control Detail	1632.01	Rock Inlet Sediment Trap Type A
1605.01	Temporary Silt Fence	1632.02	Rock Inlet Sediment Trap Type B
1606.01	Special Sediment Control Fence	1632.03	Rock Inlet Sediment Trap Type C
1607.01	Gravel Construction Entrance	1633.01	Temporary Rock Silt Check Type A
1622.01	Temporary Berms and Slope Drains	1633.02	Temporary Rock Silt Check Type B
1630.01	Riser Basin	1634.01	Temporary Rock Sediment Dam Type A
1630.02	Silt Basin Type B	1634.02	Temporary Rock Sediment Dam Type B
1630.03	Temporary Silt Ditch	1635.01	Rock Pipe Inlet Sediment Trap Type A
1630.04	Stilling Basin	1635.02	Rock Pipe Inlet Sediment Trap Type B
1630.05	Temporary Diversion	1640.01	Coir Fiber Baffle
1630.06	Special Stilling Basin	1645.01	Temporary Stream Crossing
1631.01	Matting Installation		

23-OCT-2019 08:27
mpatskoski
B-5308_EC_tsh_1.dgn

PROJECT REFERENCE NO.	SHEET NO.
B-5308	EC-2
R/W SHEET NO.	___
ROADWAY DESIGN ENGINEER	HYDRAULICS ENGINEER

CDM Smith
CDM Smith Inc.
5400 Glenwood Avenue
Suite 400
Raleigh, NC 27612-3228
NC COA No. F-1255

SUMMIT DESIGN AND ENGINEERING SERVICES
Summit Design and Engineering Services
2905 Meadowview Drive
Hillsborough, NC 27278
NC FIRM LICENSE No: P-0339

COIR FIBER WATTLE WITH POLYACRYLAMIDE (PAM) DETAIL

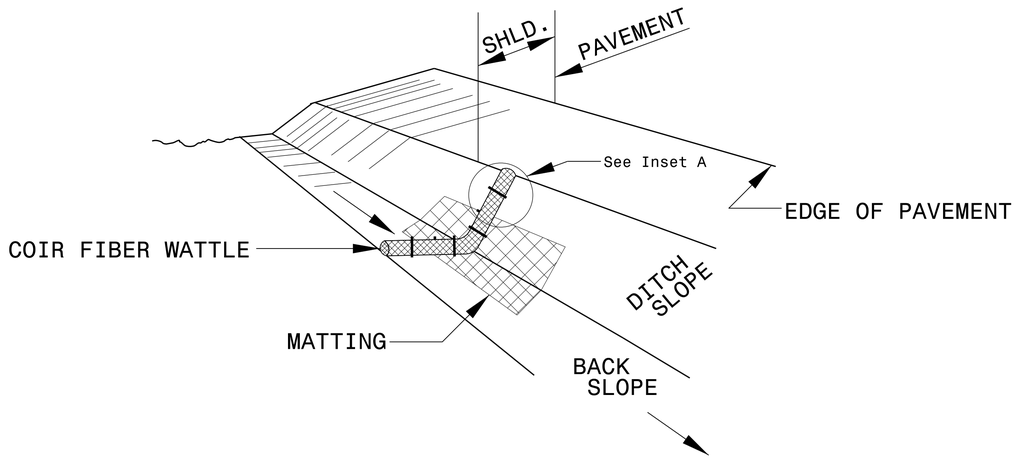

ISOMETRIC VIEW

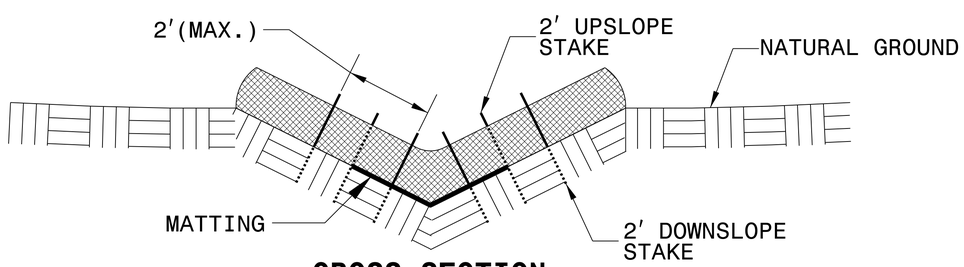

CROSS SECTION VEE DITCH

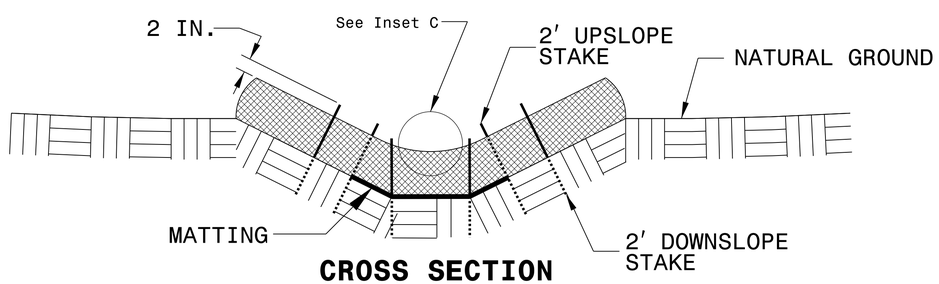

CROSS SECTION TRAPEZOIDAL DITCH

NOTES:

USE MINIMUM 12 IN. DIAMETER COIR FIBER (COCONUT FIBER) WATTLE.

USE 2 FT. WOODEN STAKES WITH A 2 IN. BY 2 IN. NOMINAL CROSS SECTION.

ONLY INSTALL WATTLE(S) TO A HEIGHT IN DITCH SO FLOW WILL NOT WASH AROUND WATTLE AND SCOUR DITCH SLOPES AND AS DIRECTED.

INSTALL A MINIMUM OF 2 UPSLOPE STAKES AND 4 DOWNSLOPE STAKES AT AN ANGLE TO WEDGE WATTLE TO BOTTOM OF DITCH.

PROVIDE STAPLES MADE OF 0.125 IN. DIAMETER STEEL WIRE FORMED INTO A U SHAPE NOT LESS THAN 12″ IN LENGTH.

INSTALL STAPLES APPROXIMATELY EVERY 1 LINEAR FOOT ON BOTH SIDES OF WATTLE AND AT EACH END TO SECURE IT TO THE SOIL.

INSTALL MATTING IN ACCORDANCE WITH SECTION 1631 OF THE STANDARD SPECIFICATIONS.

PRIOR TO POLYACRYLAMIDE (PAM) APPLICATION, OBTAIN A SOIL SAMPLE FROM PROJECT LOCATION, AND FROM OFFSITE MATERIAL, AND ANALYZE FOR APPROPRIATE PAM FLOCCULANT TO BE APPLIED TO EACH WATTLE.

INITIALLY APPLY 2 OUNCES OF ANIONIC OR NEUTRALLY CHARGED PAM OVER WATTLE WHERE WATER WILL FLOW AND 1 OUNCE OF PAM ON MATTING ON EACH SIDE OF WATTLE. REAPPLY PAM AFTER EVERY RAINFALL EVENT THAT IS EQUAL TO OR EXCEEDS 0.50 IN.

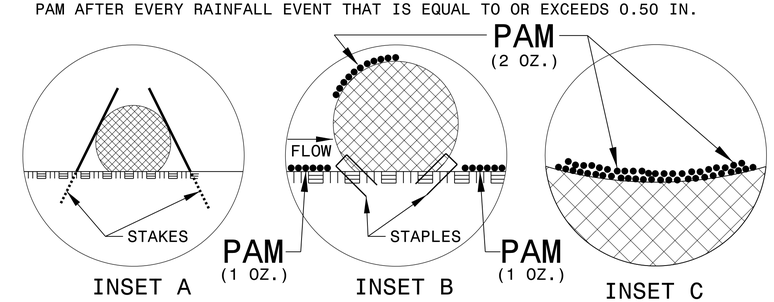

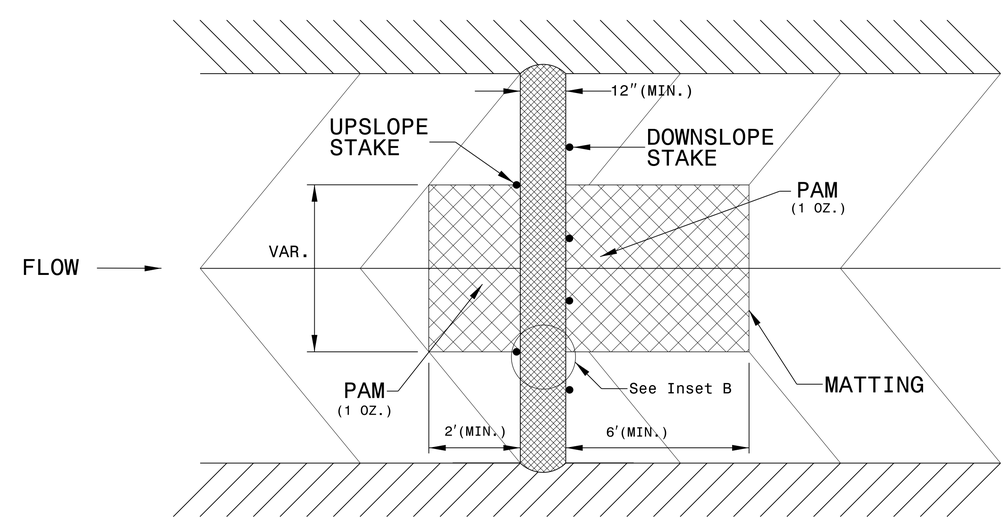

TOP VIEW

PROJECT REFERENCE NO.	SHEET NO.
B-5308	EC-2A
R/W SHEET NO.	____
ROADWAY DESIGN ENGINEER	HYDRAULICS ENGINEER

SILT FENCE COIR FIBER WATTLE BREAK DETAIL

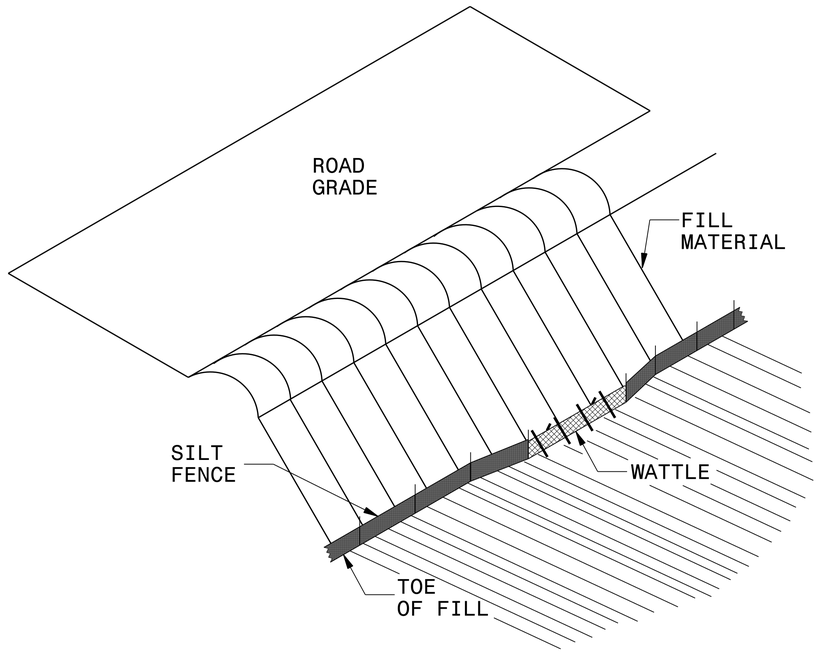

ISOMETRIC VIEW

NOTES:

USE MINIMUM 12 IN. DIAMETER EXCELSIOR WATTLE AND LENGTH OF 10 FT.

EXCAVATE A 1 TO 2 INCH TRENCH FOR WATTLE TO BE PLACED.

DO NOT PLACE WATTLE ON TOE OF SLOPE.

USE 2 FT. WOODEN STAKES WITH A 2 IN. BY 2 IN. NOMINAL CROSS SECTION.

INSTALL A MINIMUM OF 2 UPSLOPE STAKES AND 4 DOWNSLOPE STAKES AT AN ANGLE TO WEDGE WATTLE TO GROUND.

PROVIDE STAPLES MADE OF 0.125 IN. DIAMETER STEEL WIRE FORMED INTO A U SHAPE NOT LESS THAN 12″ IN LENGTH.

INSTALL STAPLES APPROXIMATELY EVERY 1 LINEAR FOOT ON BOTH SIDES OF WATTLE AND AT EACH END TO SECURE IT TO THE SOIL.

WATTLE INSTALLATION CAN BE ON OUTSIDE OF THE SILT FENCE AS DIRECTED.

INSTALL TEMPORARY SILT FENCE IN ACCORDANCE WITH SECTION 1605 OF THE STANDARD SPECIFICATIONS.

INSET A

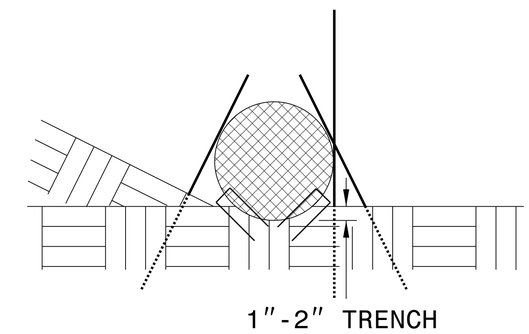

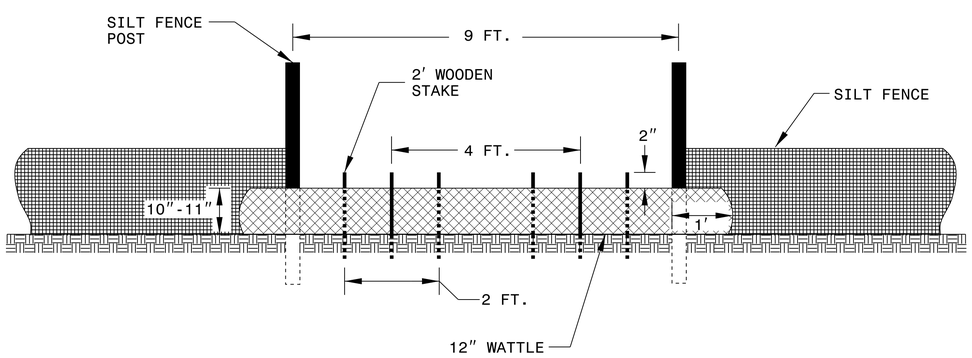

VIEW FROM SLOPE

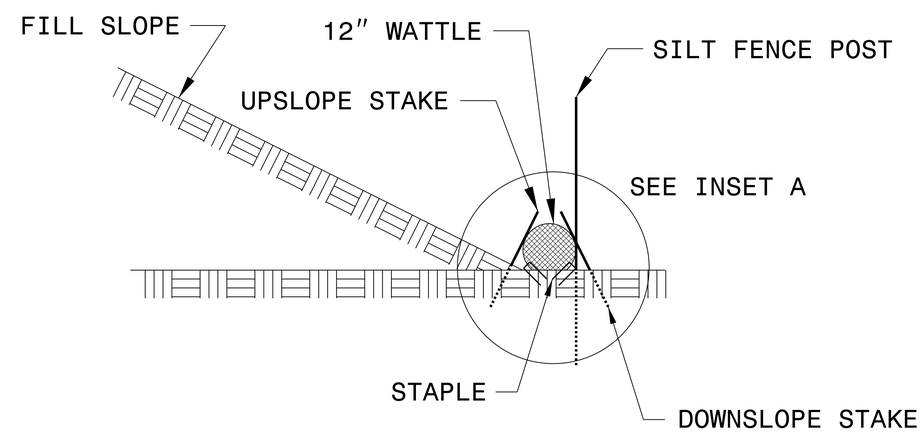

SIDE VIEW

PROJECT REFERENCE NO.	SHEET NO.
B-5308	EC-3
ROADWAY DESIGN ENGINEER	HYDRAULICS ENGINEER

DIVISION OF HIGHWAYS
STATE OF NORTH CAROLINA

SOIL STABILIZATION TIMEFRAMES

SITE DESCRIPTION	STABILIZATION TIME	TIMEFRAME EXCEPTIONS
PERIMETER DIKES, SWALES, DITCHES AND SLOPES	7 DAYS	NONE
HIGH QUALITY WATER (HQW) ZONES	7 DAYS	NONE
SLOPES STEEPER THAN 3:1	7 DAYS	IF SLOPES ARE 10' OR LESS IN LENGTH AND ARE NOT STEEPER THAN 2:1, 14 DAYS ARE ALLOWED.
SLOPES 3:1 OR FLATTER	14 DAYS	7 DAYS FOR SLOPES GREATER THAN 50' IN LENGTH.
ALL OTHER AREAS WITH SLOPES FLATTER THAN 4:1	14 DAYS	NONE, EXCEPT FOR PERIMETERS AND HQW ZONES.

PROJECT REFERENCE NO.	SHEET NO.
B-5308	EC-4/CONST.4
R/W SHEET NO.	
ROADWAY DESIGN ENGINEER	HYDRAULICS ENGINEER

CDM Smith — CDM Smith Inc. 5400 Glenwood Avenue Suite 400 Raleigh, NC 27612-3228 NC COA No. F-1255

SUMMIT — Summit Design and Engineering Services 504 Meadowland Drive Hillsborough, NC 27278 NC FIRM LICENSE No: P-0339

NOTE: UTILIZE COIR FIBER MATTING ADJACENT TO WETLANDS/ JURISDICTIONAL AREAS, AND AS DIRECTED

NOTE: UTILIZE TEMPORARY SEDIMENT BASIN OR SPECIAL STILLING BASIN(S) AS STILLING BASIN WHERE APPLICABLE.

NOTE: PLACE TEMPORARY ROCK SEDIMENT DAMS TYPE – B AND TEMPORARY ROCK SILT CHECKS TYPE – A AT DRAINAGE OUTLETS

NOTE: PERIMETER EROSION CONTROL MEASURES SHALL BE INSTALLED DURING CLEARING AND GRUBBING PHASE.

NOTE: THE OUTSIDE BUFFER, WETLAND OR WATER BOUNDARY SHALL BE CLEARLY MARKED BY HIGHLY VISIBLE FENCING (ORANGE SAFETY FENCE).

CLEARING AND GRUBBING EROSION CONTROL FOR CONSTRUCTION SHEET 4

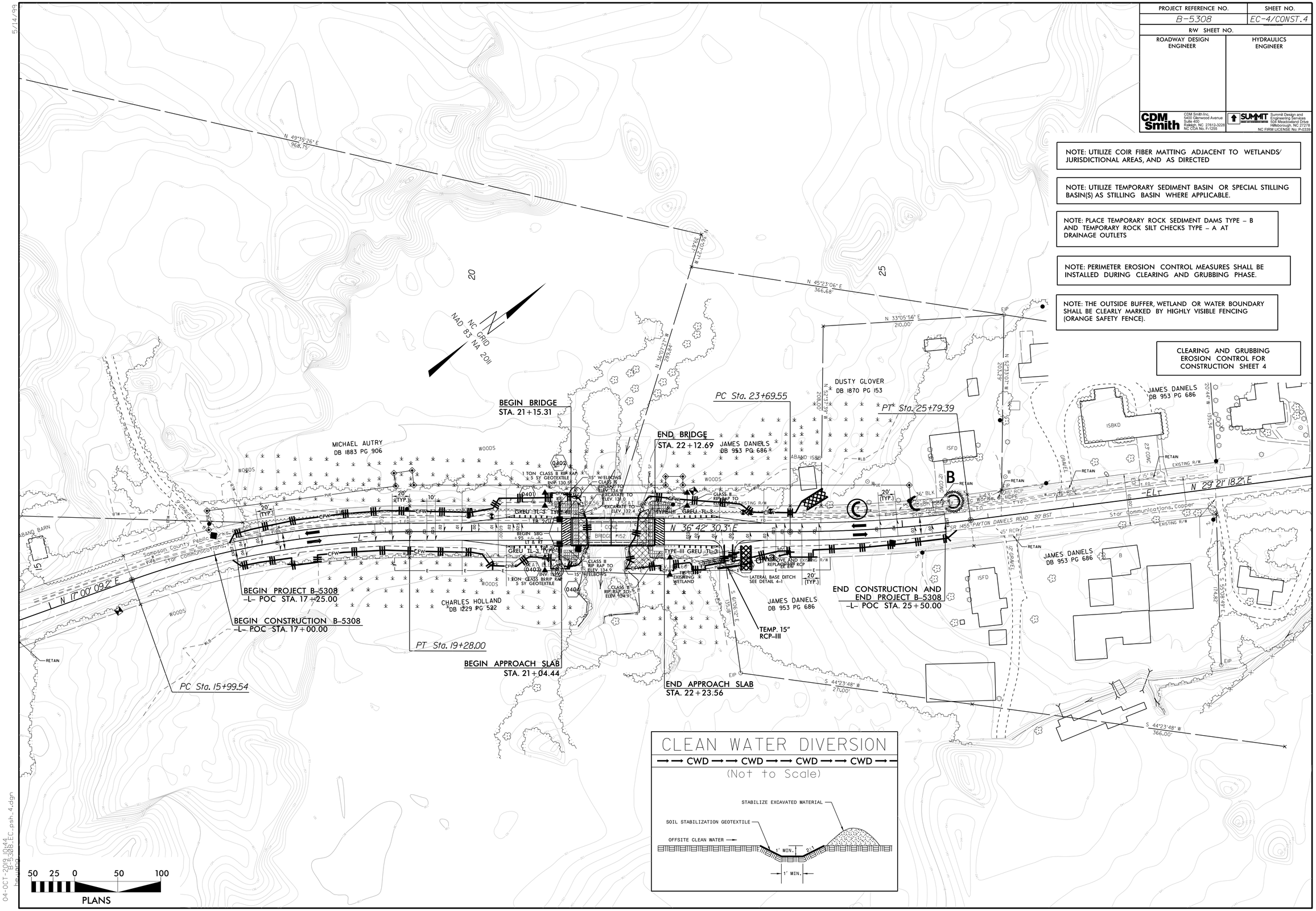

CLEAN WATER DIVERSION

→ → CWD → → CWD → → CWD → → CWD → –

(Not to Scale)

5/14/99

04-OCT-2019 10:44
B-5308_EC_psh_4.dgn
bauldrg

PROJECT REFERENCE NO.	SHEET NO.
B-5308	EC-5/CONST.4
R/W SHEET NO.	
ROADWAY DESIGN ENGINEER	HYDRAULICS ENGINEER

CDM Smith — CDM Smith Inc. 5400 Glenwood Avenue Suite 400 Raleigh, NC 27612-3228 NC COA No. F-1255

SUMMIT — Summit Design and Engineering Services 504 Meadowland Drive Hillsborough, NC 27278 NC FIRM LICENSE No: P-0339

NOTE:
UTILIZE COIR FIBER MATTING ADJACENT TO WETLANDS/ JURISDICTIONAL AREAS, AND AS DIRECTED

NOTE:
UTILIZE TEMPORARY SEDIMENT BASIN OR SPECIAL STILLING BASIN(S) AS STILLING BASIN WHERE APPLICABLE.

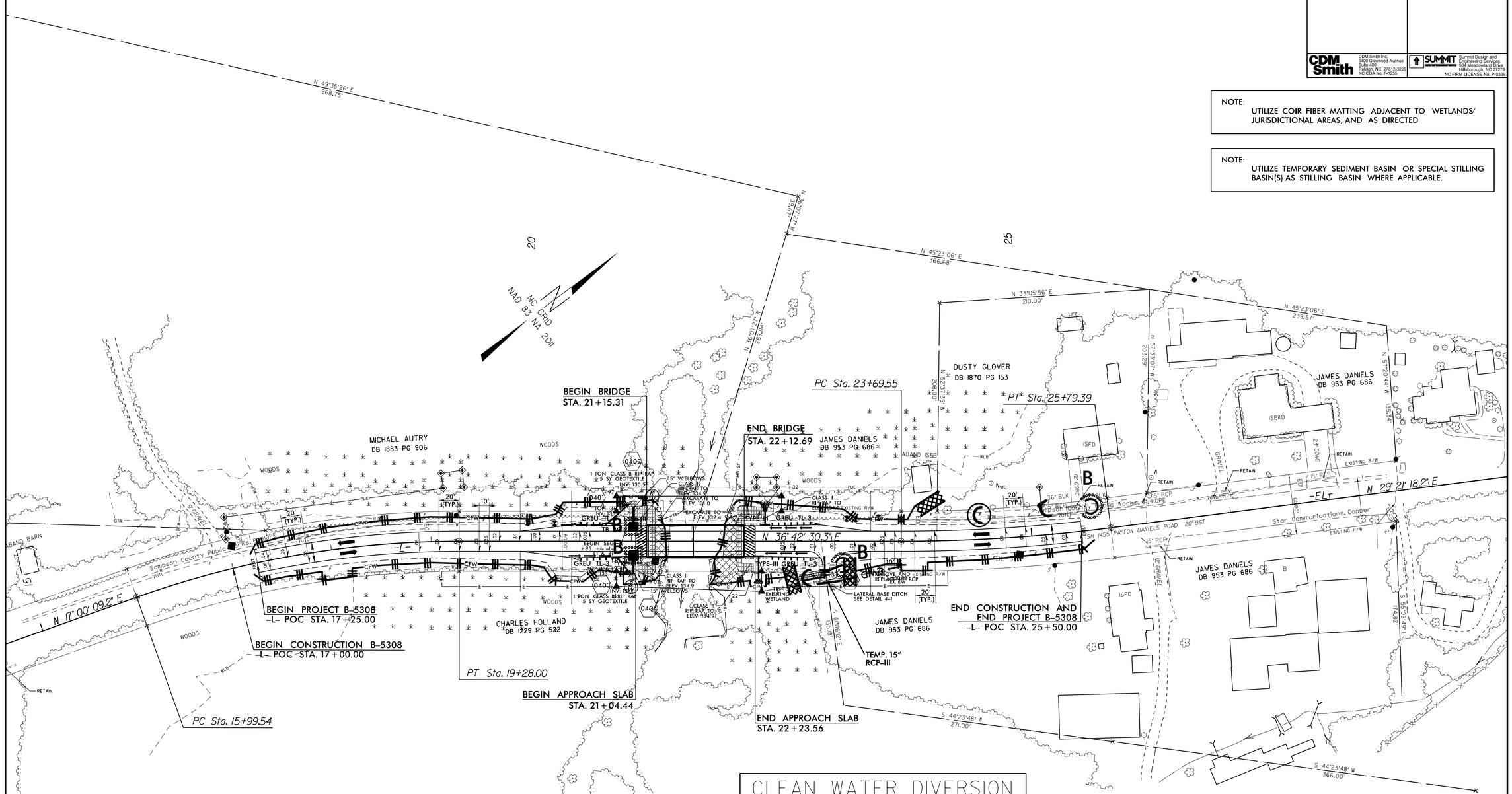

CLEAN WATER DIVERSION

→ → CWD → → CWD → → CWD → → CWD → →

(Not to Scale)

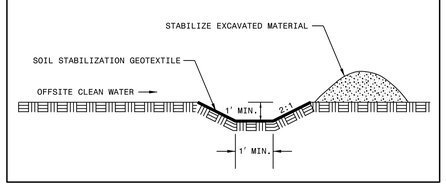

5/14/99

04-OCT-2012 10:44
B5308_EC_psh_5.dgn
bewong

DocuSign Envelope ID: 72C255A9-36F1-448C-BBEA-B1E7C5B3F4A5

PROJECT: B–5308

WBS NO.	SHEET NO.
B–5308	UC–1

STATE OF NORTH CAROLINA
DIVISION OF HIGHWAYS

UTILITY CONSTRUCTION PLANS
SAMPSON COUNTY

LOCATION: BRIDGE NO. 152 OVER CAESAR SWAMP ON SR 1455 (PAYTON DANIELS ROAD)

TYPE OF WORK: WATER LINE RELOCATION

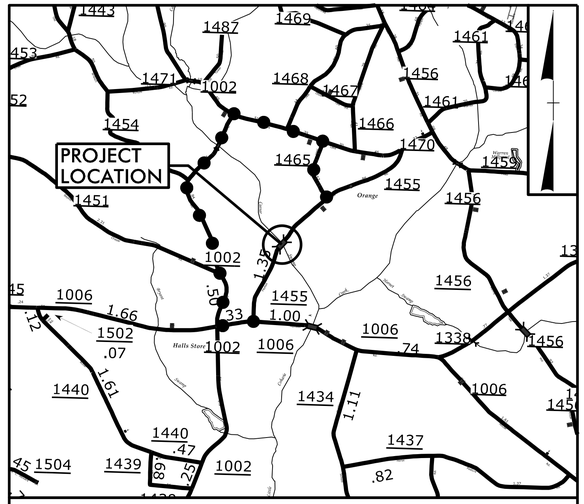

VICINITY MAP

DETOUR ROUTE

N. T. S.

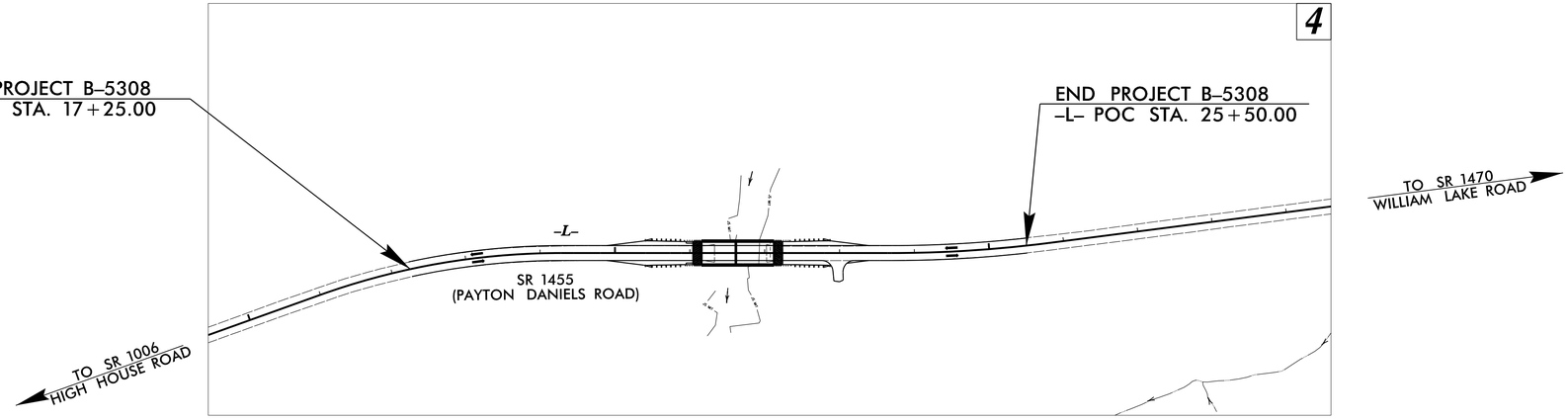

DOCUMENT NOT CONSIDERED FINAL UNTIL ALL SIGNATURES ARE COMPLETED

GRAPHIC SCALES

50 25 0 50 100
PLANS

50 25 0 50 100
PROFILE (HORIZONTAL)

10 5 0 10 20
PROFILE (VERTICAL)

INDEX OF SHEETS

SHEET NO.:	DESCRIPTION:
UC–1	TITLE SHEET
UC–2	UTILITY SYMBOLOGY
UC–3	NOTES
UC–3A	DETAILS
UC–4	UTILITY PLAN/PROFILE SHEET

WATER AND SEWER OWNERS ON PROJECT

(A) WATER – SAMPSON COUNTY WATER DEPT

PREPARED IN THE OFFICE OF

CDM Smith
CDM Smith Inc.
5400 Glenwood Avenue
Suite 400
Raleigh, NC 27612-3228
NC COA No. F-1255

MICHAEL SLOOP, P.E. — PROJECT ENGINEER
DAVID KEISER, P. E. — PROJECT MANAGER
JOHN BRIAND, P. E. — PROJECT DESIGN ENGINEER

SEAL

NORTH CAROLINA PROFESSIONAL SEAL 031440 ENGINEER MICHAEL K. SLOOP
10/23/2019
DocuSigned by: Michael K. Sloop
0A7801A6EA16470...

DIVISION OF HIGHWAYS
HIGHWAY DIVISION 3
5501 BARBADOS BLVD.
CASTLE HAYNE, NC 28429
FAX (910) 675–0143

KAREN E. COLLETTE, P.E. — DIVISION ENGINEER
KEVIN G. BOWEN — DIVISION CONSTRUCTION ENGINEER
LONNY A. SLEEPER — DIVISION UTILITY ENGINEER

-SYSTIME
-V:\Proj\B5308_Ut_tsh_UCI_psh.dgn
USER: CONRADAM

DocuSign Envelope ID: 72C255A9-36F1-448C-BBEA-B1E7C5B3F4A5

PROJECT REFERENCE NO.	SHEET NO.
B-5308	UC-2

STATE OF NORTH CAROLINA
DIVISION OF HIGHWAYS

UTILITIES PLAN SHEET SYMBOLS

PROPOSED WATER SYMBOLS

- Water Line (Sized as Shown) — 12" WL
- 11¼ Degree Bend
- 22½ Degree Bend
- 45 Degree Bend
- 90 Degree Bend
- Plug
- Tee
- Cross
- Reducer
- Gate Valve — GV
- Butterfly Valve — BV
- Tapping Valve — TGV
- Line Stop — LS
- Line Stop with Bypass — LS/BP
- Blow Off — BO
- Fire Hydrant — PFH
- Relocate Fire Hydrant — RFH
- Remove Fire Hydrant — REM FH
- Water Meter — PWM
- Relocate Water Meter — RWM
- Remove Water Meter — REM WM
- Water Pump Station — PS(W)
- RPZ Backflow Preventer — PRPZ
- DCV Backflow Preventer — PBFP
- Relocate RPZ Backflow Preventer — RRPZ
- Relocate DCV Backflow Preventer — RBFP

PROPOSED SEWER SYMBOLS

- Gravity Sewer Line (Sized as Shown) — 12" SS
- Force Main Sewer Line (Sized as Shown) — 12" FSS
- Manhole (Sized per Note)
- Sewer Pump Station — PS(SS)

PROPOSED MISCELLANEOUS UTILITIES SYMBOLS

- Power Pole
- Telephone Pole
- Joint Use Pole
- Telephone Pedestal — TEL PED
- Utility Line by Others (Type as Shown) — PROP O/H POW LINES
- Trenchless Installation — 12" TL INSTALL
- Encasement by Open Cut — 24" ENCAS BY OC
- Encasement — 24" ENCASEMENT
- Thrust Block
- Air Release Valve — AR
- Utility Vault — UV
- Concrete Pier — CP
- Steel Pier — SP
- Plan Note — NOTE
- Pay Item Note — PAY ITEM

EXISTING UTILITIES SYMBOLS

- Power Pole
- Telephone Pole
- Joint Use Pole
- Utility Pole
- Utility Pole with Base
- H-Frame Pole
- Power Transmission Line Tower
- Water Manhole
- Power Manhole
- Telephone Manhole
- Sanitary Sewer Manhole
- Hand Hole for Cable
- Power Transformer
- Telephone Pedestal
- CATV Pedestal
- Gas Valve
- Gas Meter
- Located Miscellaneous Utility Object
- Abandoned According to Utility Records — AATUR
- End of Information — E.O.I.
- *Underground Power Line — P
- *Underground Telephone Cable — T
- *Underground Telephone Conduit — TC
- *Underground Fiber Optics Telephone Cable — T FO
- *Underground TV Cable — TV
- *Underground Fiber Optics TV Cable — TV FO
- *Underground Gas Pipeline — G
- Aboveground Gas Pipeline — A/G Gas
- *Underground Water Line — W
- Aboveground Water Line — A/G Water
- *Underground Gravity Sanitary Sewer Line — SS
- Aboveground Gravity Sanitary Sewer Line — A/G Sanitary Sewer
- *Underground SS Forced Main Line — FSS
- Underground Unknown Utility Line — ?UTL
- SUE Test Hole
- Water Meter
- Water Valve
- Fire Hydrant
- Sanitary Sewer Cleanout

*For Existing Utilities

- Utility Line Drawn from Record (Type as Shown) — W
- Designated Utility Line (Type as Shown)

SYSTIME = 10:26:43
USER: brenda
DGN: ...ut-sym_UC2_psh.dgn

DocuSign Envelope ID: 72C255A9-36F1-448C-BBEA-B1E7C5B3F4A5

5/14/99

PROJECT REFERENCE NO.	SHEET NO.
B-5308	UC-3
DESIGNED BY: WPS	
DRAWN BY: KAP	
CHECKED BY: WPS	
APPROVED BY: MKS	
REVISED:	
NORTH CAROLINA DEPARTMENT OF TRANSPORTATION	
UTILITIES ENGINEERING SEC. PHONE:(919)707-6690 FAX:(919)250-4151	UTILITY CONSTRUCTION PLANS ONLY

NORTH CAROLINA PROFESSIONAL SEAL 031440 ENGINEER MICHAEL W. SLOOP
10/23/2019
DocuSigned by: Michael W. Sloop

UTILITY CONSTRUCTION

DOCUMENT NOT CONSIDERED FINAL UNLESS ALL SIGNATURES COMPLETED

UTILITY CONSTRUCTION

GENERAL NOTES:

1. THE PROPOSED UTILITY CONSTRUCTION SHALL MEET THE APPLICABLE REQUIREMENTS OF THE NC DEPARTMENT OF TRANSPORTATION'S "STANDARD SPECIFICATIONS FOR ROADS AND STRUCTURES" DATED JANUARY 2018.

2. THE EXISTING UTILITIES BELONG TO SAMPSON COUNTY .

3. ALL WATER LINES TO BE INSTALLED WITHIN COMPLIANCE OF THE RULES AND REGULATIONS OF THE NORTH CAROLINA DEPARTMENT OF ENVIRONMENTAL QUALITY, DIVISION OF WATER RESOURCES,
PUBLIC WATER SUPPLY SECTION. ALL SEWER LINES TO BE INSTALLED WITHIN COMPLIANCE OF THE RULES AND REGULATIONS OF THE NORTH CAROLINA DEPARTMENT OF ENVIRONMENT QUALITY, DIVISION OF WATER RESOURCES, WATER QUALITY SECTION. PERFORM ALL WORK IN ACCORDANCE WITH THE APPLICABLE PLUMBING CODES.

4. THE UTILITY OWNER OWNS THE EXISTING UTILITY FACILITIES AND WILL OWN THE NEW UTILITY FACILITIES AFTER ACCEPTANCE BY THE DEPARTMENT. THE DEPARTMENT OWNS THE CONSTRUCTION CONTRACT AND HAS ADMINISTRATIVE AUTHORITY. COMMUNICATIONS AND DECISIONS BETWEEN THE CONTRACTOR AND UTILITY OWNER ARE NOT BINDING UPON THE DEPARTMENT OR THIS CONTRACT UNLESS AUTHORIZED BY THE ENGINEER. AGREEMENTS BETWEEN THE UTILITY OWNER AND CONTRACTOR FOR THE WORK THAT IS NOT PART OF THIS CONTRACT OR IS SECONDARY TO THIS CONTRACT ARE ALLOWED, BUT ARE NOT BINDING UPON THE DEPARTMENT.

5. PROVIDE ACCESS FOR THE DEPARTMENT PERSONNEL AND THE OWNER'S REPRESENTATIVES TO ALL PHASES OF CONSTRUCTION. NOTIFY DEPARTMENT PERSONNEL AND THE UTILITY OWNER TWO WEEKS PRIOR TO COMMENCEMENT OF ANY WORK AND ONE WEEK PRIOR TO SERVICE INTERRUPTION. KEEP UTILITY OWNERS' REPRESENTATIVES INFORMED OF WORK PROGRESS AND PROVIDE OPPORTUNITY FOR INSPECTION OF CONSTRUCTION AND TESTING.

6. THE PLANS DEPICT THE BEST AVAILABLE INFORMATION FOR THE LOCATION, SIZE, AND TYPE OF MATERIAL FOR ALL EXISTING UTILITIES. MAKE INVESTIGATIONS FOR DETERMINING THE EXACT LOCATION, SIZE, AND TYPE MATERIAL OF THE EXISTING FACILITIES AS NECESSARY FOR THE CONSTRUCTION OF THE PROPOSED UTILITIES AND FOR AVOIDING DAMAGE TO EXISTING FACILITIES. REPAIR ANY DAMAGE INCURRED TO EXISTING FACILITIES TO THE ORIGINAL OR BETTER CONDITION AT NO ADDITIONAL COST TO THE DEPARTMENT.

7. MAKE FINAL CONNECTIONS OF THE NEW WORK TO THE EXISTING SYSTEM WHERE INDICATED ON THE PLANS, AS REQUIRED TO FIT THE ACTUAL CONDITIONS, OR AS DIRECTED.

8. MAKE CONNECTIONS BETWEEN EXISTING AND PROPOSED UTILITIES AT TIMES MOST CONVENIENT TO THE PUBLIC, WITHOUT
ENDANGERING THE UTILITY SERVICE, AND IN ACCORDANCE WITH THE UTILITY OWNER'S REQUIREMENTS. MAKE CONNECTIONS ON WEEKENDS, AT NIGHT, AND ON HOLIDAYS IF NECESSARY.

9. ALL UTILITY MATERIALS SHALL BE APPROVED PRIOR TO DELIVERY TO THE PROJECT. SEE 1500-7, " SUBMITTALS AND RECORDS" IN SECTION 1500 OF THE STANDARD SPECIFICATIONS.

PROJECT SPECIFIC NOTES:

1. CONTRACTOR SHALL NOT IMPACT WATER SERVICE TO BUSINESSES OR RESIDENCES FOR MORE THAN 8 HOURS OR THE CONTRACTOR SHALL PROVIDE TEMPORARY WATER IN ACCORDANCE WITH SAMPSON COUNTY PUBLIC WORKS TO IMPACTED CUSTOMERS AT THE CONTRACTOR'S EXPENSE.

2. CONTRACTOR SHALL COORDINATE WITH SAMPSON COUNTY PUBLIC WORKS A MINIMUM OF 14 DAYS PRIOR TO PERFORMING ANY WATERLINE CONNECTIONS OR IMPACTING WATER SERVICE TO ANY RESIDENCES OR BUSINESSES.

3. ALL PIPE FOR OPEN TRENCH CONSTRUCTION SHALL BE C905 DR 18 PVC.

4. PVC PIPE JOINTS SHALL BE PUSH ON TYPE HAVING BELLS MADE AS AN INTEGRAL PART OF THE PIPE CONFORMING TO ASTM D3139.

5. RESTRAINED PVC PIPE SHALL BE RESTRAINED USING APPROVED HARNESS RESTRAINTS THAT ARE COMPATIBLE WITH ASTM 2241 PVC.

6. ALL FITTINGS SHALL BE MECHANICAL JOINT AND RESTRAINED WITH APPROVED RETAINER GLANDS THAT ARE COMPATIBLE WITH ASTM 2241 PVC.

7. REFER TO THE RESTRAINED JOINT DETAIL ON SHEET UC-3A FOR RESTRAINED JOINT LENGTHS.

8. ALL HDPE PIPE AND FITTINGS SHALL BE MANUFACTURED IN STRICT ACCORDANCE WITH AWWA C906 AND SHALL BE FROM A SINGLE MANUFACTURER WHO IS FULLY EXPERIENCED, REPUTABLE AND QUALIFIED IN THE MANUFACTURE OF THE POLYETHYLENE PIPE AND FITTINGS TO BE FURNISHED.

9. HDPE PIPE SHALL BE PE 4710 WITH A MINIMUM DR 11 SUITABLE FOR 200 PSI.

10. WATERLINE PIPING JOINT DEFLECTION SHALL BE LIMITED TO 75% OF THE MANUFACTURER'S ALLOWABLE DEFLECTION.

11. HORIZONTAL DIRECTIONAL DRILLING (HDD) WATER MAIN PIPE IS 8-INCH DIAMETER HDPE DR 11. TOTAL LENGTH OF THE HDD AS SHOWN ON THE DRAWINGS IS APPROXIMATELY 576 LF. THIS LENGTH IS BASED ON A DESIGN USING AVAILABLE SUBSURFACE INFORMATION.

11 (CONT). AS STATED BELOW THE CONTRACTOR IS RESPONSIBLE FOR OBTAINING ADDITIONAL SUBSURFACE DATA TO CONFIRM SUBSURFACE CONDITIONS AS PRESENTED ON THE DRAWINGS AND/OR MAKE MODIFICATIONS TO THE HDD ALIGNMENT OR PIPE STRENGTH REQUIREMENTS BASED ON THE ADDITIONAL INFORMATION OBTAINED.

12. PRIOR TO COMMENCING WORK ON ANY TRENCHLESS INSTALLATION, PROVIDE A DESIGN FOR THE TRENCHLESS INSTALLATION CERTIFIED BY AN ENGINEER LICENSED BY THE STATE OF NORTH CAROLINA, AS REQUIRED BY SUBARTICLE 1550-3(B) OF THE STANDARD SPECIFICATIONS. THE HDD DESIGN SHALL INCLUDE PLANS SHOWING LENGTH AND PROFILE, INCLUDING ENTRY AND EXIT ANGLES AND RADII.

13. SUBMITTALS FOR DESIGN OF HDD

A. HDD DESIGN BY THE CONTRACTOR'S ENGINEER SHALL INCLUDE A GEOTECHNICAL EXPLORATION AND LABORATORY TESTING PROGRAM TO ADEQUATELY DEFINE THE SUBSURFACE CONDITIONS. THIS SUPPLEMENTAL INFORMATION TO THE INFORMATION PROVIDED IN THESE DOCUMENTS SHALL BE USED AS THE BASIS OF THE HDD DESIGN AND ANY MODIFICATIONS TO THE PROPOSED LAYOUT AS SHOWN.

B. SUBMIT CALCULATIONS IDENTIFYING THE CRITICAL DOWNHOLE PRESSURE THAT WOULD CAUSE HYDROFRACTURE. THE CALCULATIONS SHALL IDENTIFY ALL PARAMETERS USED AND STATE ALL ASSUMPTIONS MADE IN THE CALCULATIONS. CALCULATIONS FOR PIPE STRESSES DUE TO PULLBACK, BENDING, FLUID BUCKLING LOADS, EARTH LOADS, GROUNDWATER LOADS, AND ANY OTHER INSTALLATION AND SERVICE LOADS. LIST ALL ASSUMPTIONS MADE IN THE CALCULATIONS, INCLUDING THE RADIUS OF CURVATURE, ASSUMED DRILLING FLUID WEIGHTS, WHETHER PIPE IS ASSUMED TO BE FILLED OR EMPTY DURING PULLBACK, AND TEMPERATURE.

C. PROVIDE RECORDS OF EQUIPMENT CALIBRATIONS AND CERTIFICATIONS FOR ALL EQUIPMENT USED FOR DOWNHOLE SURVEYS AND TRACKING OF THE DRILL HEAD. PROCEDURES FOR OPERATING THE DOWNHOLE SURVEY TOOLS SHALL BE DESCRIBED, INCLUDING MEASURES TO VERIFY THE ACCURACY OF THE EQUIPMENT READINGS.

D. SUBMIT PLANS FOR DISPOSAL OF WASTE MATERIALS RESULTING FROM THE PIPELINE CONSTRUCTION, INCLUDING DRILLING FLUIDS, CUTTINGS, WASTE OIL, FUEL, DISCHARGE WATER, ETC. IDENTIFY THE DISPOSAL SITE AND SUBMIT A LETTER INDICATING WILLINGNESS AND LEGAL AUTHORITY OF RECIPIENT TO ACCEPT THE DESCRIBED AND ANTICIPATED WASTE PRODUCTS.

E. SUBMIT A CONTINGENCY PLAN FOR REMEDIATION OF POTENTIAL PROBLEMS THAT MAY BE ENCOUNTERED DURING THE DRILLING OPERATIONS. THE CONTINGENCY PLANS SHALL ADDRESS THE OBSERVATIONS THAT WOULD LEAD TO THE DISCOVERY OF THE PROBLEM AND THE METHODS THAT WOULD BE USED TO MITIGATE THE PROBLEM. CONTRACTOR SHALL BE CAPABLE OF IMPLEMENTING THE PLAN IMMEDIATELY SHOULD AN INADVERTENT RETURN OR SURFACE SPILL OCCUR DURING THE HDD WORK.

14. SUBMITTALS AND AS-BUILT HDD SUBMITTALS

A. THE CONTRACTOR SHALL DOCUMENT ANY VARIATIONS BETWEEN THE ACTUAL CONTRACT DRAWINGS AND PROFILE OF THE BORE PATH AND THE LOCATION SHOWN ON THE CONTRACT DRAWINGS. THE CONTRACTOR SHALL NOTIFY IN WRITING AND BY TELEPHONE THE ENGINEER IMMEDIATELY UPON DISCOVERY OF ANY DEVIATIONS. SUBMIT DESCRIPTIONS OF METHODS, EQUIPMENT, AND MATERIALS TO BE USED FOR CONTACT GROUTING ANY AREAS WHERE OVER-EXCAVATION, ANNULUS BETWEEN THE FINAL REAMED BORE DIAMETER AND THE CARRIER PIPE, ABORTED BORES, VOIDS, OR CAVITIES ARE CREATED OR ENCOUNTERED DURING CONSTRUCTION.

B. THE FOLLOWING SHALL BE SUBMITTED AS CONSTRUCTION PROGRESSES AND AT THE COMPLETION OF CONSTRUCTION: MAXIMUM DRILLING SPEEDS AND REAMING RATES FOR PILOT BORE AND EACH REAMING PASS; MEASURED MUD AND/OR DRILLING FLUID WEIGHTS USED DURING PILOT BORING AND REAMING OF THE BORE MEASURED AT A MINIMUM OF THREE TIMES PER SHIFT OR AT LEAST ONCE PER 200 FEET OF DRILLED OR REAMED LENGTH, WHICHEVER IS MORE FREQUENT, WITH AT LEAST TWO (2) HOURS BETWEEN READINGS; ALL PRESSURE TEST RECORDS FOR BOTH THE PRE-INSTALLATION AND POST-INSTALLATION TESTS; AS-BUILT PROFILE OF THE PILOT BORE WITHIN 24 HOURS OF COMPLETION OF THE PILOT BORE.

SYSTIME = 16:28:11
USER NAME = brianpatrick
DGN FILE = utc_notes_UC3_psh.dgn

DocuSign Envelope ID: 72C255A9-36F1-448C-BBEA-B1E7C5B3F4A5

5/14/99

PROJECT TYPICAL DETAILS

PROJECT REFERENCE NO.	SHEET NO.
B-5308	UC-3A
DESIGNED BY: SRM	
DRAWN BY: MNG	
CHECKED BY: WPS	
APPROVED BY: WPS	
REVISED:	
NORTH CAROLINA DEPARTMENT OF TRANSPORTATION	
UTILITIES ENGINEERING SEC. PHONE:(919)707-6690 FAX:(919)250-4151	UTILITY CONSTRUCTION PLANS ONLY

NORTH CAROLINA PROFESSIONAL SEAL ENGINEER 031440 10/23/2019 E. AL SLOOP

DocuSigned by: Michael E. Sloop 0A7D1A6E4184470...

UTILITY CONSTRUCTION

DOCUMENT NOT CONSIDERED FINAL UNLESS ALL SIGNATURES COMPLETED

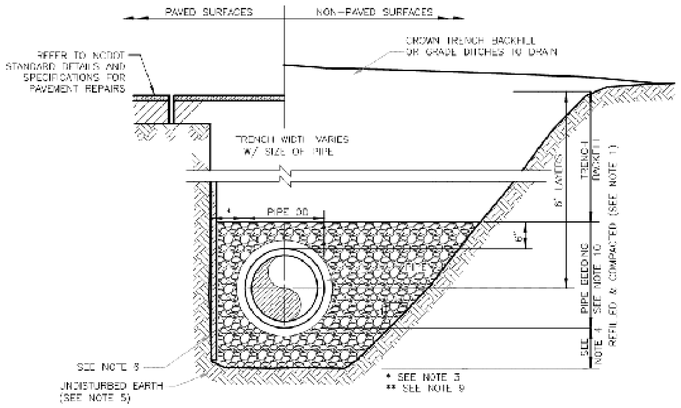

1. PIPE BEDDING & TRENCH BACKFILL – COMPACTED IN LAYERS TO 95% MAXIMUM DENSITY AS PER ASTM D698 (STANDARD PROCTOR) AND 98% IN AREAS UNDER PAVEMENT IN ACCORDANCE WITH AASHTO T-99 AS MODIFIED BY THE NC DEPARTMENT OF TRANSPORTATION.
2. WATER SHALL NOT BE PERMITTED IN THE TRENCH DURING CONSTRUCTION. DEWATER AS NECESSARY.
3. MINIMUM 18" BEYOND PIPE OD.
4. MINIMUM 6" LOOSELY PLACED SELECT MATERIAL CLASS II OR CLASS III, TYPE 1 FOR PIPE BEDDING. LEAVE SECTION DIRECTLY BENEATH PIPE UNCOMPACTED AS PIPE SEATING AND BACKFILL WILL ACCOMPLISH COMPACTION.
5. PLACE FOUNDATION CONDITIONING MATERIAL (SELECT MATERIAL) BELOW BEDDING IF REQUIRED OR AS DIRECTED BY ENGINEER. FOUNDATION CONDITIONING MATERIAL SHALL BE ENCAPSULATED WITH GEOTEXTILE FABRIC AS SPECIFIED.
6. SHEETING SHALL BE DRIVEN BELOW THE UTILITY INVERT IF REQUIRED FOR LATERAL SUPPORT OR UNSUITABLE MATERIAL REMOVAL. WHERE DRIVEN BELOW PIPE SPRINGLINE, SHEETING SHALL BE CUT OFF A MIN OF 12" ABOVE TOP OF PIPE OR HIGHER, AS AUTHORIZED BY THE ENGINEER, AND LEFT IN PLACE. IN NO CASE SHALL SHEETING LEFT IN PLACE EXTEND HIGHER THAN 18" BELOW SURFACE GRADE UNLESS SPECIFICALLY APPROVED. BRACING SHALL BE PROVIDED AS REQUIRED.
7. EXCAVATED MATERIALS MIXED WITH DELETERIOUS SUBSTANCES DURING CONSTRUCTION SHALL NOT BE USED FOR BACKFILLING.
8. FOR INSTALLATIONS IN PAVEMENT, ALL EXISTING PAVEMENT SHALL BE CUT SQUARELY WITH A SAW. WEARING SURFACE SHALL BE SAME TYPE AND THICKNESS AS THE EXISTING PAVEMENT.
9. TRENCH SLOPES SHALL BE AS REQUIRED BY OSHA AND SHALL NOT EXCEED 1:1 NEXT TO ROADS – USE ACTIVE SHORING AS REQUIRED.
10. SELECT BACKFILL MATERIAL CLASS III OR CLASS III, TYPE 1 INSTALLED AND COMPACTED IN 6" LIFTS.
11. TRENCH BOXES SHALL NOT EXTEND BELOW THE SPRINGLINE OF THE PIPE, UNLESS APPROVED BY THE ENGINEER ON A PER CASE BASIS.

PIPE BEDDING DETAIL

NTS

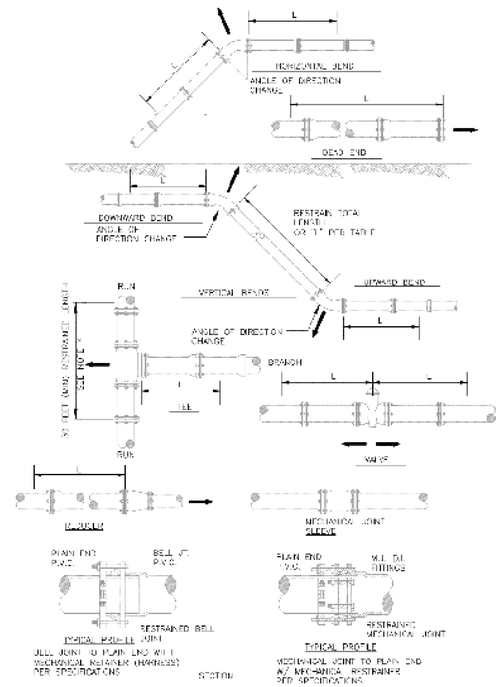

PVC PIPE RESTRAINT NOTES:

1. THE "PVC PIPE RESTRAINT JOINT SCHEDULE" SHALL BE UTILIZED ON ALL PVC PIPING.
2. ASSUMPTIONS: PVC PIPE: SAFETY FACTOR=1.5, TEST PRESSURE=200PSI, SOIL=SM, TRENCH TYPE 3, DEPTH OF COVER=36 INCHES. CALCULATIONS DONE IN ACCORDANCE WITH AWWA M23 AND M41 MANUALS.
3. BENDS AND VALVES SHALL BE RESTRAINED ON EACH SIDE OF FITTING W/MECHANICAL JOINT AND BELL RESTRAINT WHERE APPLICABLE.
4. TEES, BLOW-OFF, AIRV, AND DRC HYDRANT FITTINGS: TOTAL LENGTH BETWEEN FIRST JOINTS OR RESTRAINED LENGTH ON EITHER SIDE OF TEE OR FITTING (RUN) SHALL BE A TOTAL DISTANCE OF 30 FEET (MIN). SEE SCHEDULE FOR RESTRAINED LENGTH ON TEE "BRANCH" LINE.
5. HDPE TO PVC TRANSITIONS: THE PVC PIPE SIDE SHALL BE RESTRAINED 30 FT (MIN).
6. CONTRACTOR SHALL USE FULL (20 FT NOMINAL) LENGTH JOINTS OF PVC PIPE INTO AND OUT OF EACH FITTING UNLESS OTHERWISE DIRECTED. WHERE SHORTER JOINTS ARE REQUIRED ON EITHER SIDE OF A FITTING ADDITIONAL JOINT RESTRAINT MAY BE REQUIRED BY USE OF HARNESS ASSEMBLIES PER THE SPECIFICATION.
7. WHERE THE CALCULATED RESTRAINED JOINT LENGTH IS LESS THAN OR EQUAL TO 20 FEET (MINIMUM LENGTH OF ONE JOINT OF PIPE), THE FIRST JOINT FROM THE FITTING SHALL BE RESTRAINED BY USE OF A MECHANICAL JOINT RETAINER GLAND DESIGNED FOR USE WITH PVC PIPING IN ACCORDANCE WITH THE SPECIFICATIONS.
8. WHERE THE CALCULATED RESTRAINED JOINT LENGTH IS GREATER THAN OR EQUAL TO 20 FEET THE FITTING SHALL BE RESTRAINED BY USE OF A MECHANICAL JOINT RETAINER GLAND (LOCKING FOR USE WITH PVC PIPING TO ACCOMMODATE WITH FULL SPIGOT CASING). IN ADDITION TO THE FITTING THE FOLLOWING SPECIFIED IN THE TABLE UPSTREAM/DOWNSTREAM OF THE FITTING SHALL BE RESTRAINED BY USE OF HARNESSED JOINT ASSEMBLIES (FULL RESTRAINT SYSTEMS) DESIGNED FOR USE WITH PVC PIPE IN ACCORDANCE WITH THE SPECIFICATIONS.
9. WHERE NON-STANDARD CIRCUMSTANCES ARISE IN THE FIELD CONSULT THE ENGINEER PRIOR TO INSTALLATION OF RESTRAINT SYSTEMS. FAILURE TO CONSULT THE ENGINEER MAY REQUIRE EXCAVATION AND ADJUSTMENT TO THE RESTRAINED JOINT ASSEMBLIES.
10. ALL FITTINGS SHALL BE DUCTILE IRON MECHANICAL RESTRAINED JOINT FITTINGS IN ACCORDANCE WITH THE SPECIFICATIONS.
11. THE INSTALLATION OF BELL HARNESS RESTRAINTS AT PVC JOINTS SHALL BE COMPLETED PER THE MANUFACTURERS RECOMMENDATION, WHICH INCLUDES NOT OVER TIGHTENING THE PARALLEL HOLD NUTS. THESE NUTS SHOULD ONLY BE SNUG TIGHT. THE PHONE MARKS ON THE PIPE SHOULD ALWAYS BE VISIBLE AFTER THE RESTRAINT IS INSTALLED.
12. WHERE ADJACENT OR OFFSET BENDS (NOT INCLUDING VALVES OR DEADENDS) HAVE OVERLAPPING RESTRAINED LENGTHS, ALL PIPE BETWEEN THE BENDS SHALL BE RESTRAINED.

SUMMARY TABLE - PVC PIPE RESTRAINED JOINT LENGTHS

NOMINAL PIPE SIZE (IN)	HORIZONTAL BENDS				VERTICAL BENDS						VALVES
					45° BENDS L (FT)		22.5° BENDS L (FT)		11.25° BENDS L (FT)		
	90° BENDS L (FT)	45° BENDS L (FT)	22.5° BENDS L (FT)	11.25° BENDS L (FT)	VERTICAL UP BEND	VERTICAL DN BEND	VERTICAL UP BEND	VERTICAL DN BEND	VERTICAL UP BEND	VERTICAL DN BEND	L (FT)
6	23	10	5	3	30	30	14	14	7	7	71

TEES SEE NOTE 4				REDUCERS
RUN SIZE (IN)	BRANCH SIZE (IN)	L (FT)	SIZE (IN)	L (FT)
6	6	F.O.	8"x 6"	39

Notes:
***F.O. = Fitting Only**

RESTRAINED JOINT DETAIL

NTS

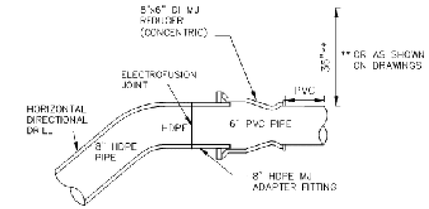

NOTES:

1. HDPE AND PVC SIZE SHALL BE AS NOTED ON THE DRAWINGS AT EACH TRANSITION. PIPE CLASS AND THICKNESS AS SPECIFIED.
2. SEE DRAWING NOTES AND SPECIFICATIONS FOR DI FITTING CLASS.
3. TRANSITION TO PVC SHALL OCCUR AFTER HDD ALIGNMENT HAS REACHED HORIZONTAL SLOPE.

PVC/HDPE TRANSITION DETAIL

NTS

SYSTEM
FILENAME
USER ROBERSCHIA

DocuSign Envelope ID: 72C255A9-36F1-448C-BBEA-B1E7C5B3F4A5

8/17/99

REVISIONS

NOTES:

1. ELEVATION OF EXISTING 6″ WATERLINE AT WATERLINE TIE-IN LOCATIONS IS ASSUMED TO BE 3 FEET BELOW EXISTING GRADE. CONTRACTOR SHALL VERIFY THE LOCATION AND DEPTH OF THE EXISTING WATERLINE PRIOR TO MAKING CONNECTION AND ADJUST PIPE AS NEEDED LEADING UP TO CONNECTION.

2. REFER TO THE RESTRAINED JOINT DETAIL ON SHEET UC-3A FOR RESTRAINED JOINT LENGTHS.

3. CONTRACTOR SHALL RESTRAIN THE EXISTING WATERLINE BY EXCAVATING AND INSTALLING A BELL AND HARNESS RESTRAINT AROUND EACH PIPE JOINT FOR A MINIMUM LENGTH AS SPECIFIED IN THE RESTRAINED JOINT DETAIL ON SHEET UC-3A. IF THE REQUIRED RESTRAINED LENGTH DOESN'T END AT A PIPE JOINT, CONTRACTOR SHALL INSTALL BELL AND HARNESS RESTRAINT ON THE NEXT PIPE JOINT PAST THE REQUIRED RESTRAINED LENGTH.

4. EACH END OF THE PROPOSED ENCASEMENT PIPES SHALL BE PLUGGED IN ACCORDANCE WITH NCDOT STANDARD DRAWING 840.71, CONCRETE AND BRICK PIPE PLUG.

5. THE CARRIER PIPE WITHIN THE ENCASEMENT PIPES SHALL BE SUPPORTED WITH THE APPROPRIATE TYPE AND QUANTITY OF STEEL SPACERS APPROVED OR DIRECTED BY THE ENGINEER.

6. PRIOR TO COMMENCING WORK ON ANY TRENCHLESS INSTALLATION, PROVIDE A DESIGN FOR THE TRENCHLESS INSTALLATION CERTIFIED BY AN ENGINEER LICENSED BY THE STATE OF NORTH CAROLINA, AS REQUIRED BY SUBARTICLE 1550-3(B) OF THE STANDARD SPECIFICATIONS. THE HDD DESIGN SHALL INCLUDE PLANS SHOWING LENGTH AND PROFILE, INCLUDING ENTRY AND EXIT ANGLES AND RADII.

PROJECT REFERENCE NO.	SHEET NO.
B-5308	UC-4

DESIGNED BY: WPS
DRAWN BY: MNG
CHECKED BY: AMC
APPROVED BY: MKS
REVISED:

NORTH CAROLINA DEPARTMENT OF TRANSPORTATION

UTILITIES ENGINEERING SEC.
PHONE:(919)707-6690
FAX:(919)250-4151

10/23/2019
NORTH CAROLINA PROFESSIONAL SEAL 031440 ENGINEER
DocuSigned by: Michael E. Slagle
0A7801A6EA19470...

UTILITY CONSTRUCTION PLANS ONLY

UTILITY CONSTRUCTION

DOCUMENT NOT CONSIDERED FINAL UNLESS ALL SIGNATURES COMPLETED

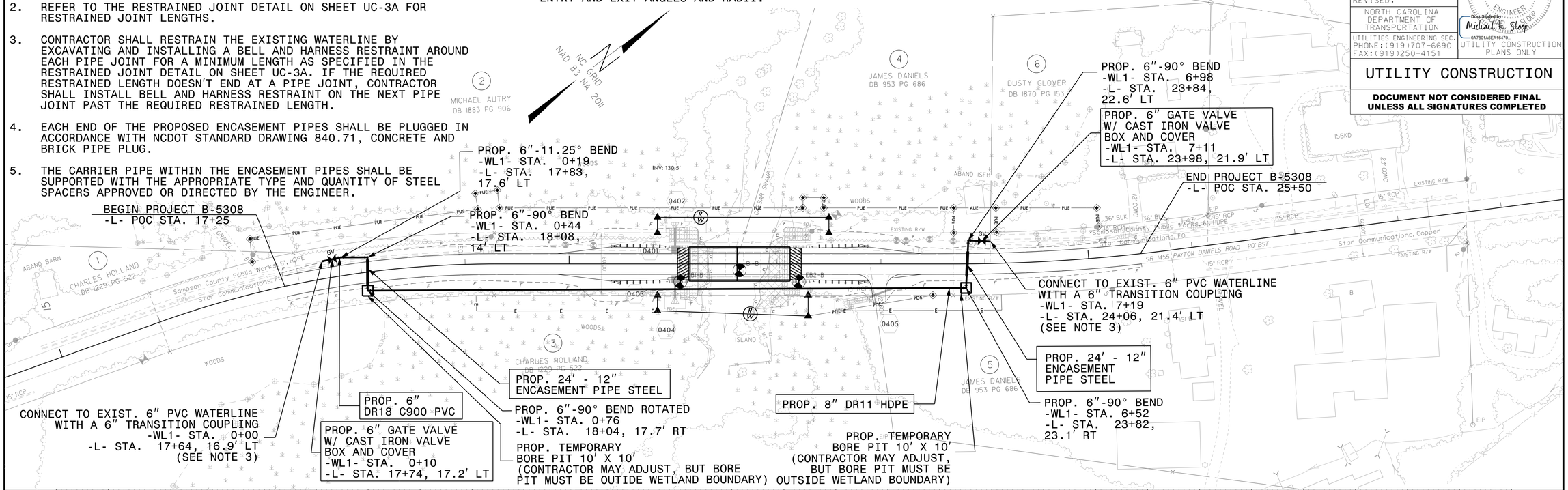

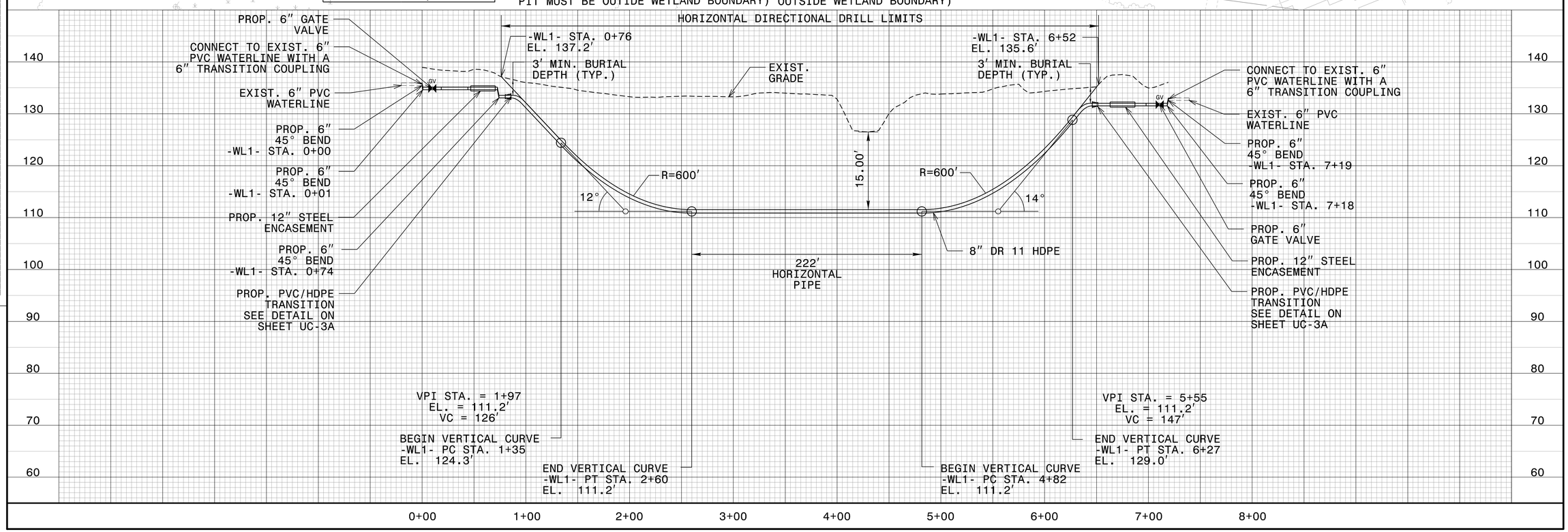

09/08/99

TIP PROJECT: B-5308

T.I.P. NO.	SHEET NO.
B-5308	UO-1

NOTE:
ALL UTILITY WORK SHOWN ON THIS SHEET WILL BE DONE BY OTHERS. NO PAYMENT WILL BE MADE TO THE CONTRACTOR FOR UTILITY WORK SHOWN ON THIS SHEET.

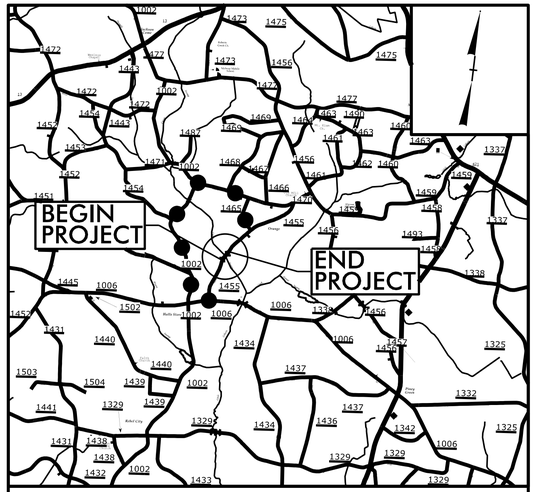

VICINITY MAP

DETOUR ROUTE

N.T.S.

STATE OF NORTH CAROLINA
DIVISION OF HIGHWAYS

UTILITIES BY OTHERS PLANS
SAMPSON COUNTY

LOCATION: REPLACE BRIDGE 152 OVER CAESAR SWAMP ON SR 1455 (PAYTON DANIELS ROAD)

TYPE OF WORK: POWER (DISTRIBUTION) AND COMMUNICATIONS

NAD 83/ NA 2011

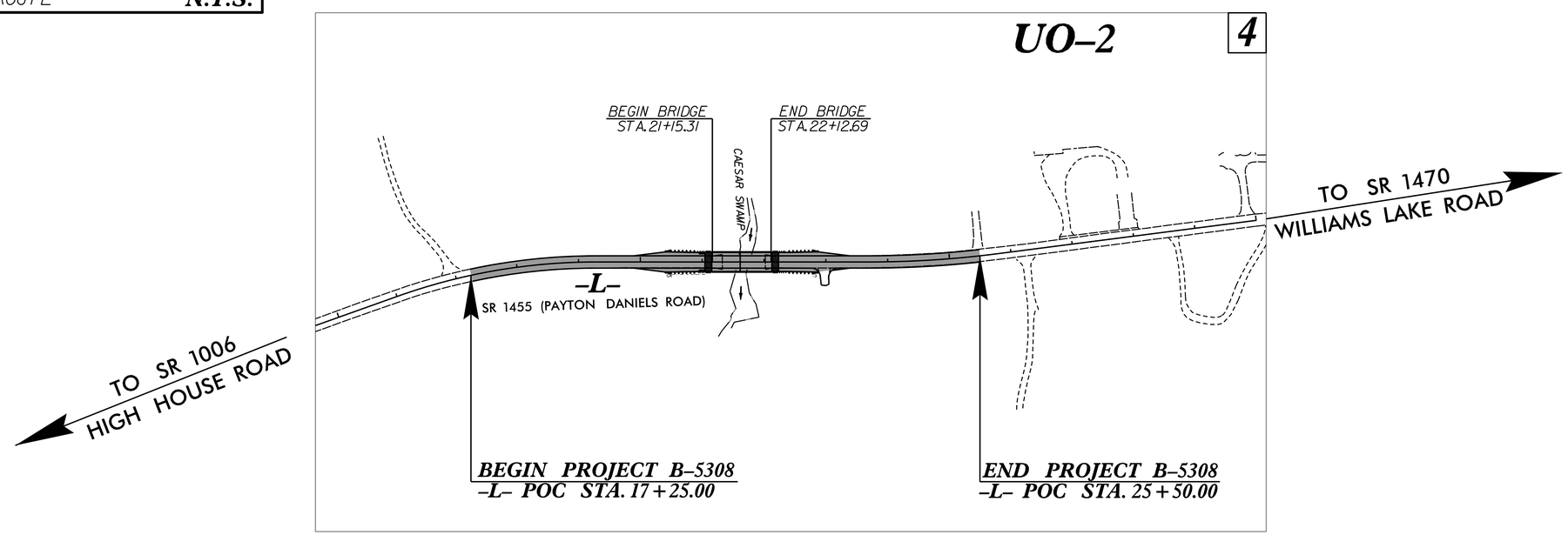

GRAPHIC SCALES

50 25 0 50 100
PLANS

50 25 0 50 100
PROFILE (HORIZONTAL)

10 5 0 10 20
PROFILE (VERTICAL)

INDEX OF SHEETS

SHEET NO.:	DESCRIPTION:
UO-1	TITLE SHEET
UO-2	UBO PLAN SHEET

UTILITY OWNERS WITH CONFLICTS

(A) POWER (DISTRIBUTION) - SOUTH RIVER EMC
(B) COMMUNICATIONS - STAR COMMUNICATIONS

PREPARED IN THE OFFICE OF:

SO-DEEP | SAM NC™

SO-DEEP I SAM NC, Inc.
A SAM COMPANY
2800-154 Sumner Boulevard, Raleigh, NC 27616 Tel 919-878-7466

Keith Garry — UTILITY PROJECT MANAGER
Zaki Wafa — PROJECT UTILITY COORDINATOR

DIVISION OF HIGHWAYS
DIVISION 3

DIV ADDRESS
5501 Barbados Blvd.
Castle Hayne, NC 28429

Derek Pielech — DIVISION CONTACT #1

$$$$SYSTIME$$$$DGN$$$$
$$$$USERNAME$$$$

PROJECT REFERENCE NO.	SHEET NO.
B-5308	U0-2
THIS SHEET CORRESPONDS TO RDY- 4	

UTILITIES BY OTHERS

ALL PROPOSED UTILITY WORK SHOWN ON THIS SHEET WILL BE DONE BY OTHERS. NO PAYMENT WILL BE MADE TO THE CONTRACTOR FOR PROPOSED UTILITY WORK SHOWN ON THIS SHEET.

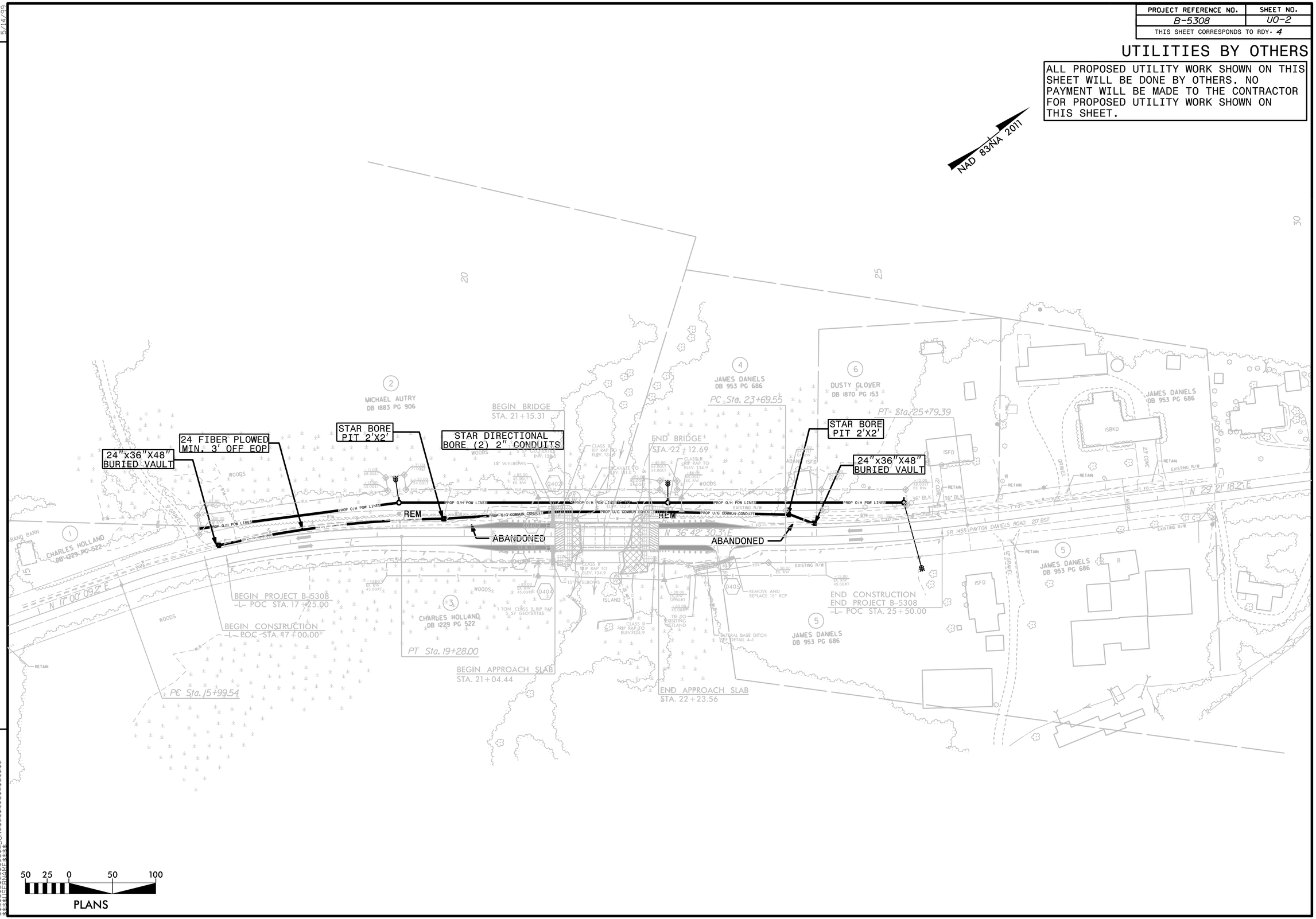

REVISIONS

01/11/19 - R/W REVISIONS: PARCELS 4 AND 6, CHANGED PERMANENT UTILITY EASEMENT TO BE AERIAL UTILITY EASEMENT FROM STA. 23+70.00 TO STA. 24+12.00. - DZK

5/14/99

CROSS SECTION SHEET INDEX

X–1 CROSS SECTION SHEET INDEX
X–2 THRU X–6 –L–

Note: "Quantities are approximate only. The Resident Engineer will re–cross–section the work accurately when the project is staked out. These cross–section notes will be used in computing the final quantities for which the contractor will be paid."

5/28/99
-SYSTIME-
-Teagan\XSC\B5308_Rdy_X1.dgn

PROJ. REFERENCE NO.	SHEET NO.
B-5308	X-2

0 2.5 5

Note: Approximate quantities only. Unclassified Excavation, Borrow Excavation, Fine Grading, Clearing and Grubbing, and Removal of Existing Pavement will be paid for at the contract lump sum price for "Grading."

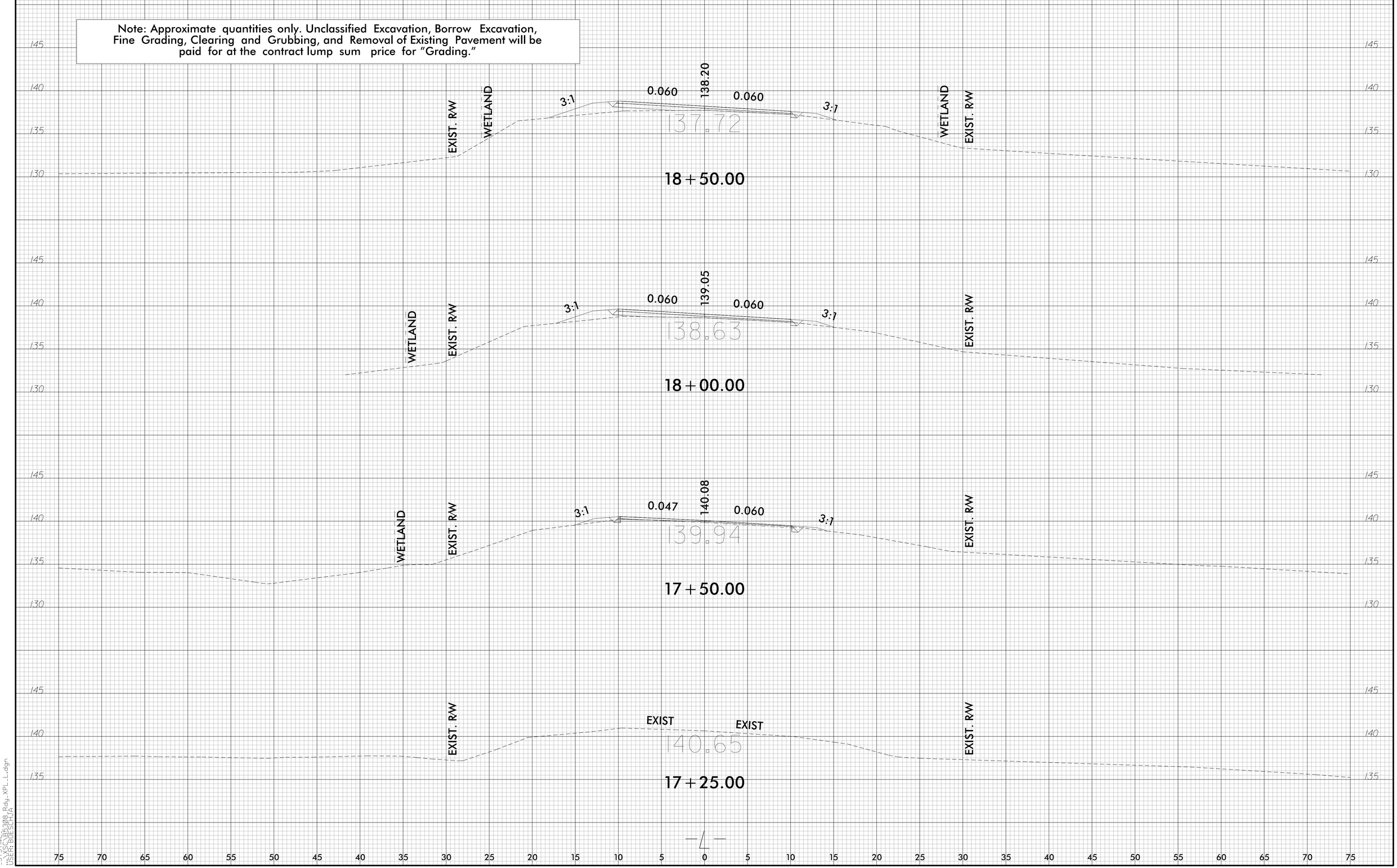

8/23/99

-SYSTIME
-B5308_Rdy_XPL_L.dgn
USER:LOPSCHIA

0 2.5 5	PROJ. REFERENCE NO.	SHEET NO.
	B-5308	X-3

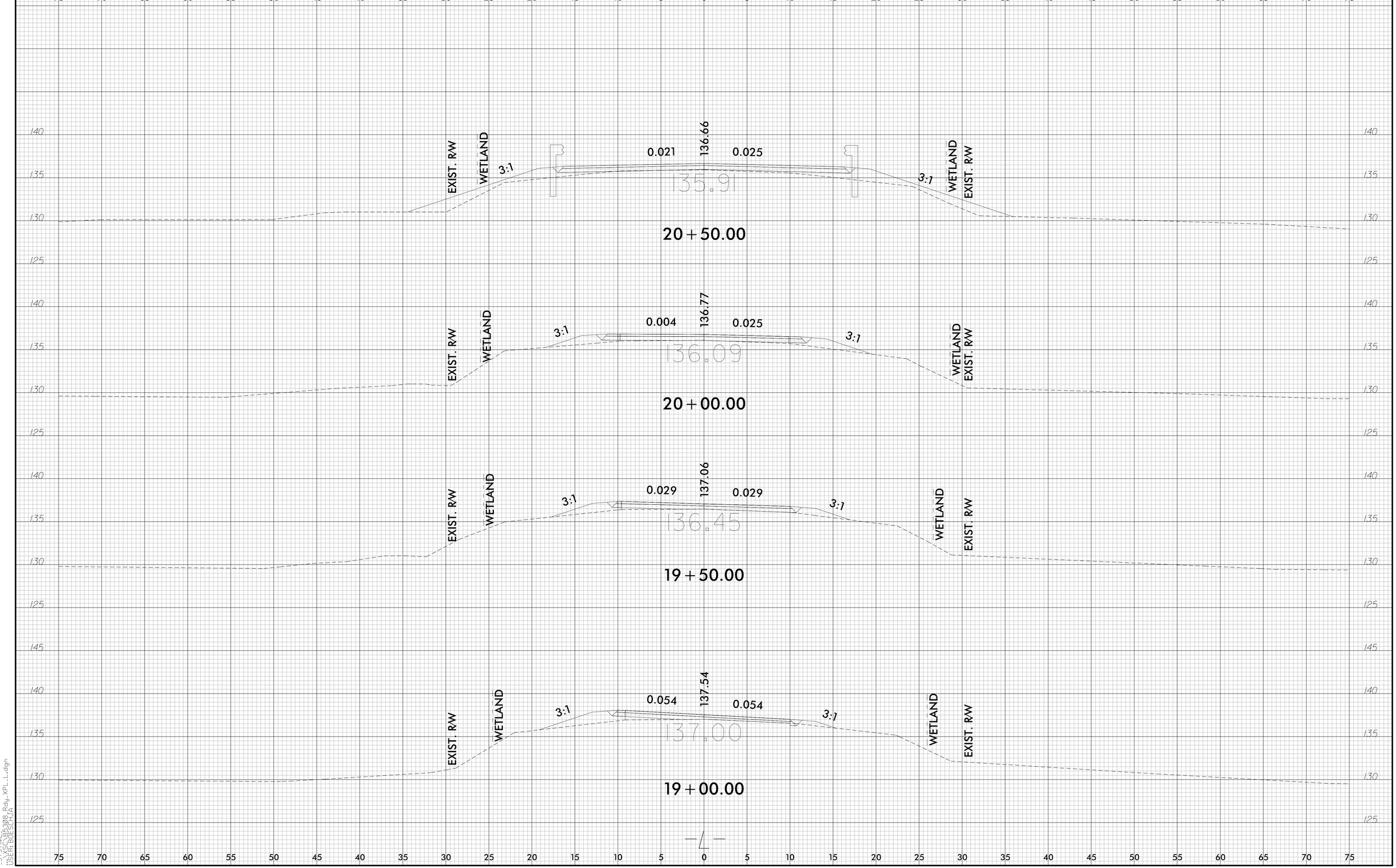

8/23/99

SYSTIME
B5308_Rdy_XPL_L.dgn
USER: DESIGN

8/23/99

0 2.5 5	PROJ. REFERENCE NO.	SHEET NO.
	B-5308	X-4

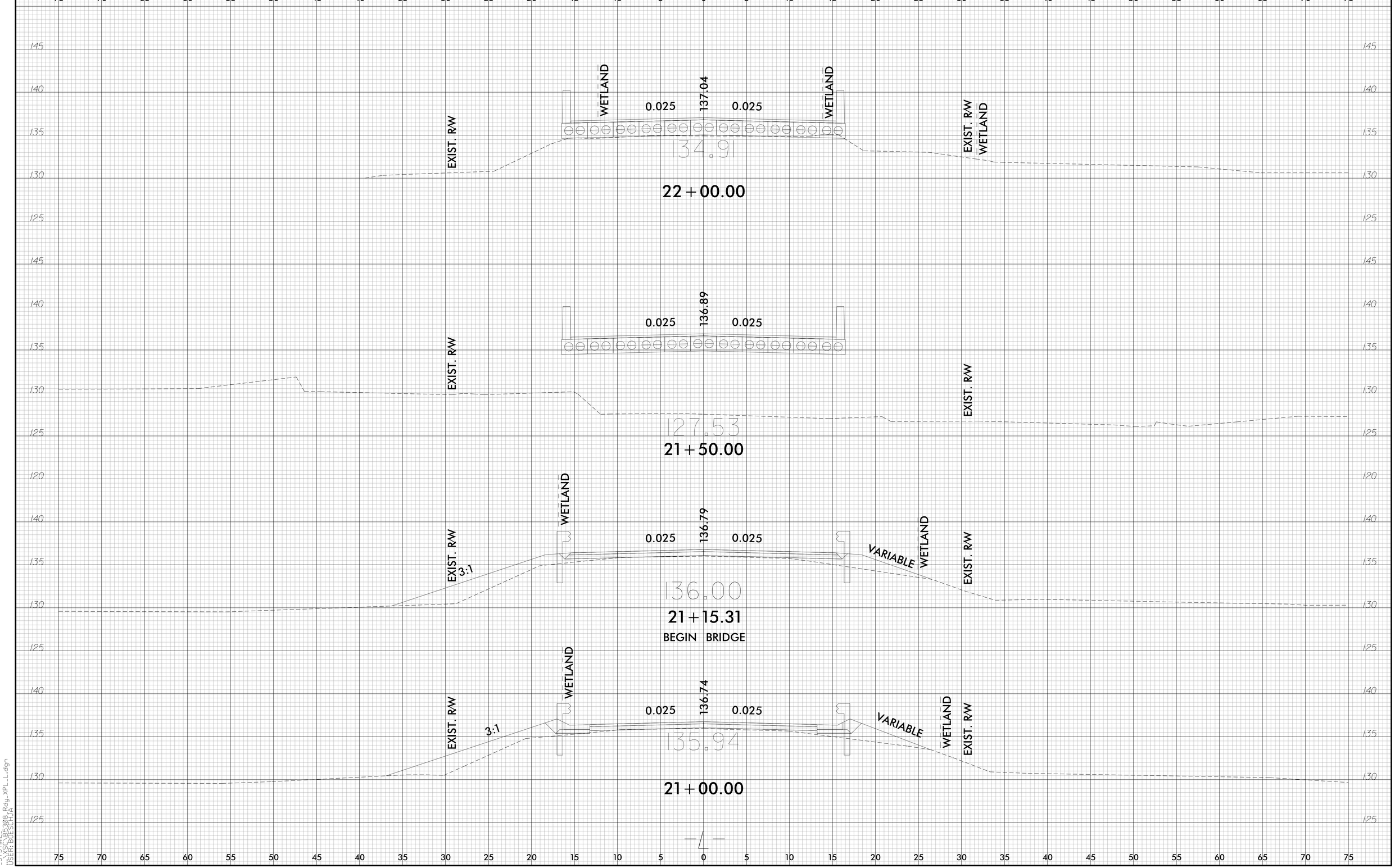

SYSTIME
B5308_Rdy_XPL_L.dgn
USER: DESIGN

0 2.5 5	PROJ. REFERENCE NO.	SHEET NO.
	B-5308	X-5

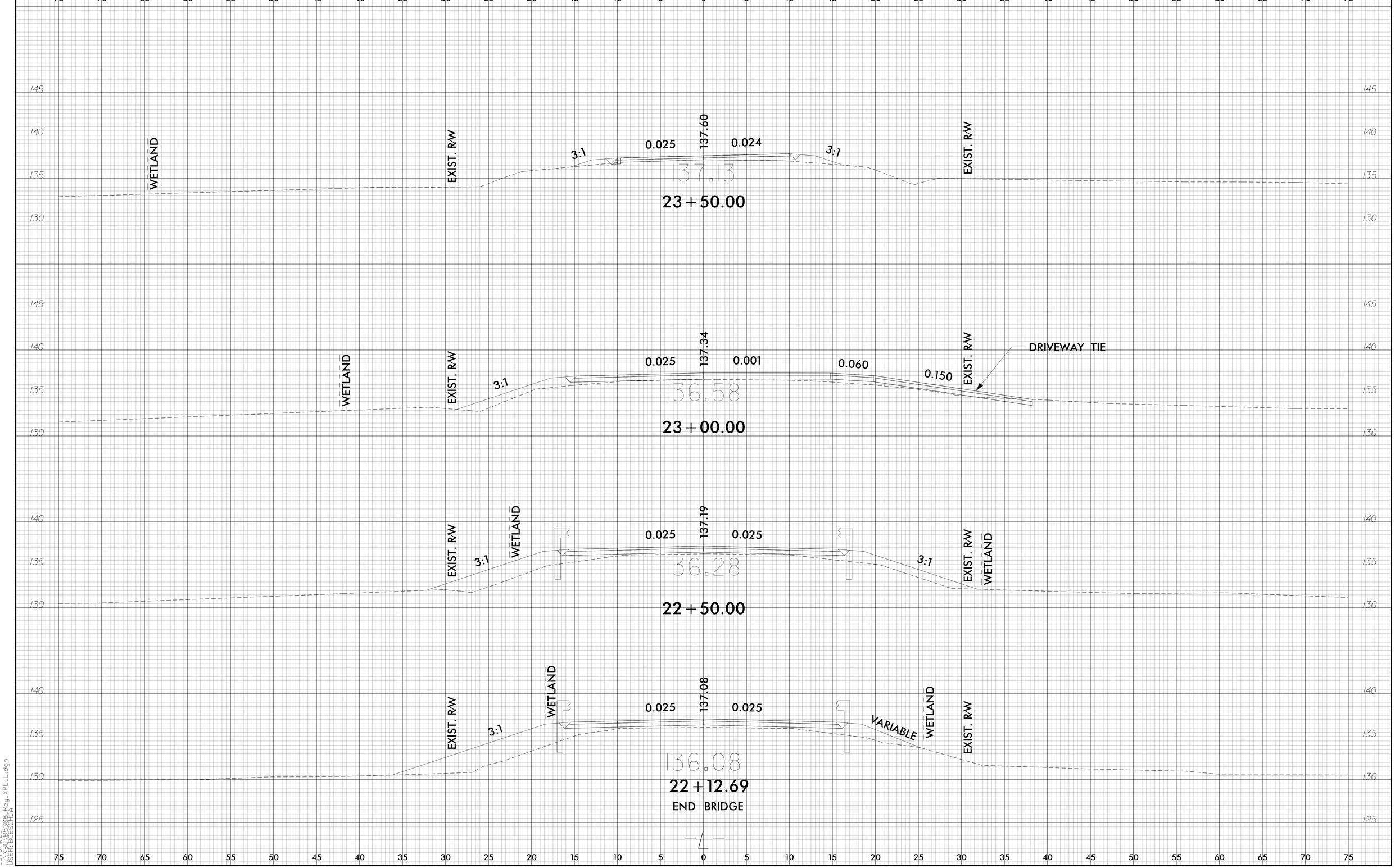

8/23/99

SYSTIME
B-5308_Rdy_XPL_L.dgn
USER: 01E3PLA

8/23/99

0 2.5 5	PROJ. REFERENCE NO.	SHEET NO.
	B-5308	X-6

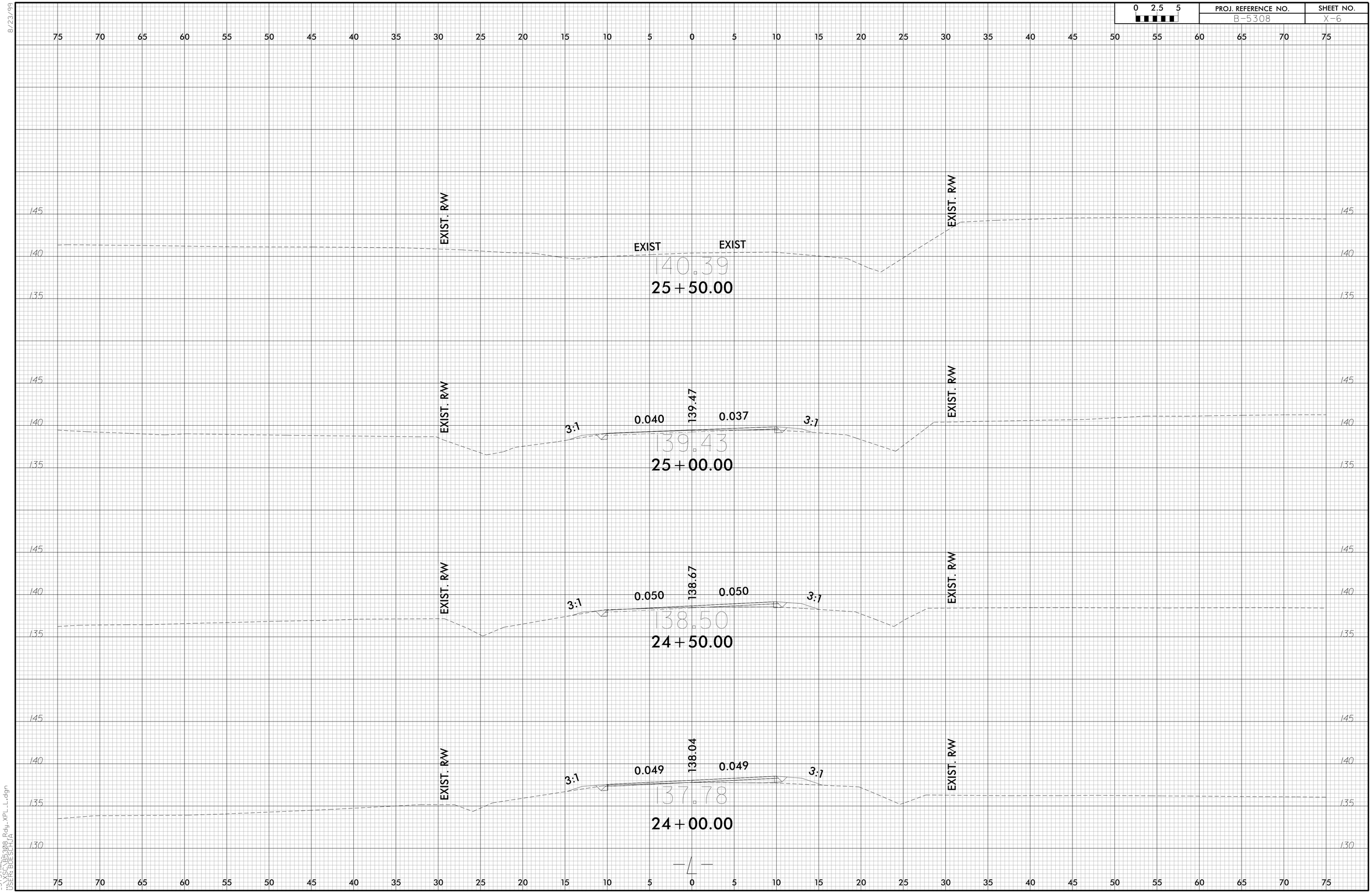

SYSTIME
B5308_Rdg_XPL_LL.dgn
USER: BOESCHJA

DocuSign Envelope ID: C919E33C-6218-4D4E-8ADF-F65E8C49C312

PROJECT: B–5308

CONTRACT: DC00225

STRUCTURE

STATE	STATE PROJECT REFERENCE NO.	SHEET NO.	TOTAL SHEETS
N.C.	B–5308		19

STATE PROJ. NO.	F. A. PROJ. NO.	DESCRIPTION
17BP.3.R.79	N/A	P.E.
17BP.3.R.79	N/A	UTIL & R/W
17BP.3.R.79	N/A	CONST.

STATE OF NORTH CAROLINA
DIVISION OF HIGHWAYS

SAMPSON COUNTY

LOCATION: REPLACE BRIDGE 152 OVER CAESAR SWAMP ON SR 1455 (PAYTON DANELS ROAD)

TYPE OF WORK: GRADING, DRAINAGE, PAVING, AND STRUCTURE

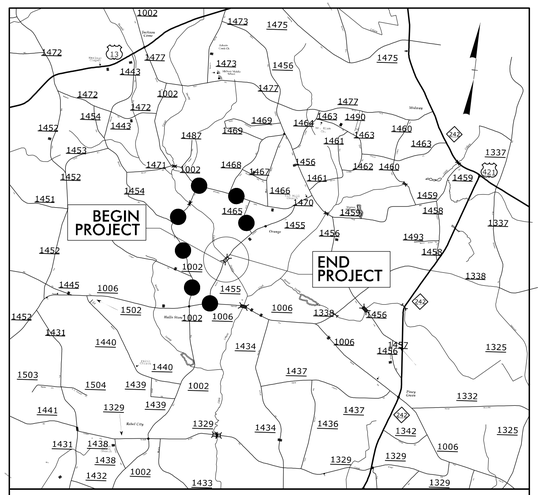

VICINITY MAP

OFF–SITE DETOUR ROUTE

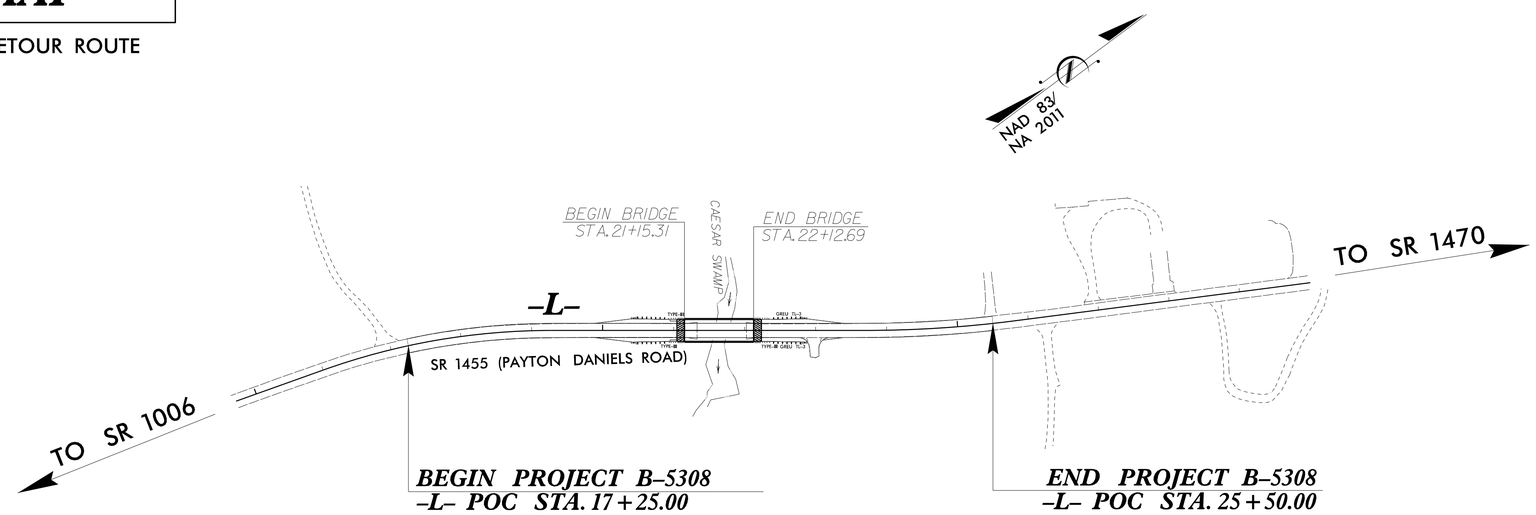

DESIGN DATA

ADT 2019 = 315 VPD
ADT 2040 = 586 VPD
K = N/A %
D = N/A %
T = N/A %
V = 60 MPH

FUNC CLASS = LOCAL
SUB–REGIONAL TIER

PROJECT LENGTH

LENGTH ROADWAY TIP PROJECT B–5308 = 0.138 MILES

LENGTH STRUCTURE TIP PROJECT B–5308 = 0.018 MILES

TOTAL LENGTH OF TIP PROJECT B–5308 = 0.156 MILES

Prepared In the Office of:

CDM Smith
CDM Smith Inc.
5400 Glenwood Avenue
Suite 400
Raleigh, NC 27612-3228
NC COA No. F-1255

FOR THE NORTH CAROLINA DEPARTMENT OF TRANSPORTATION

2018 STANDARD SPECIFICATIONS

LETTING DATE : NOV. 21, 2019

DAVID Z. KEISER, P.E.
PROJECT ENGINEER

TING H. FANG, P.E.
PROJECT DESIGN ENGINEER

DAVID STUTTS, P.E.
NCDOT CONTACT

NORTH CAROLINA PROFESSIONAL SEAL 16301 ENGINEER TING HSIUNG FANG

10/11/2019

DocuSigned by:
Ting H. Fang
60E43C9AE60462...

DocuSign Envelope ID: C919E33C-6218-4D4E-8ADF-F65E8C49C312

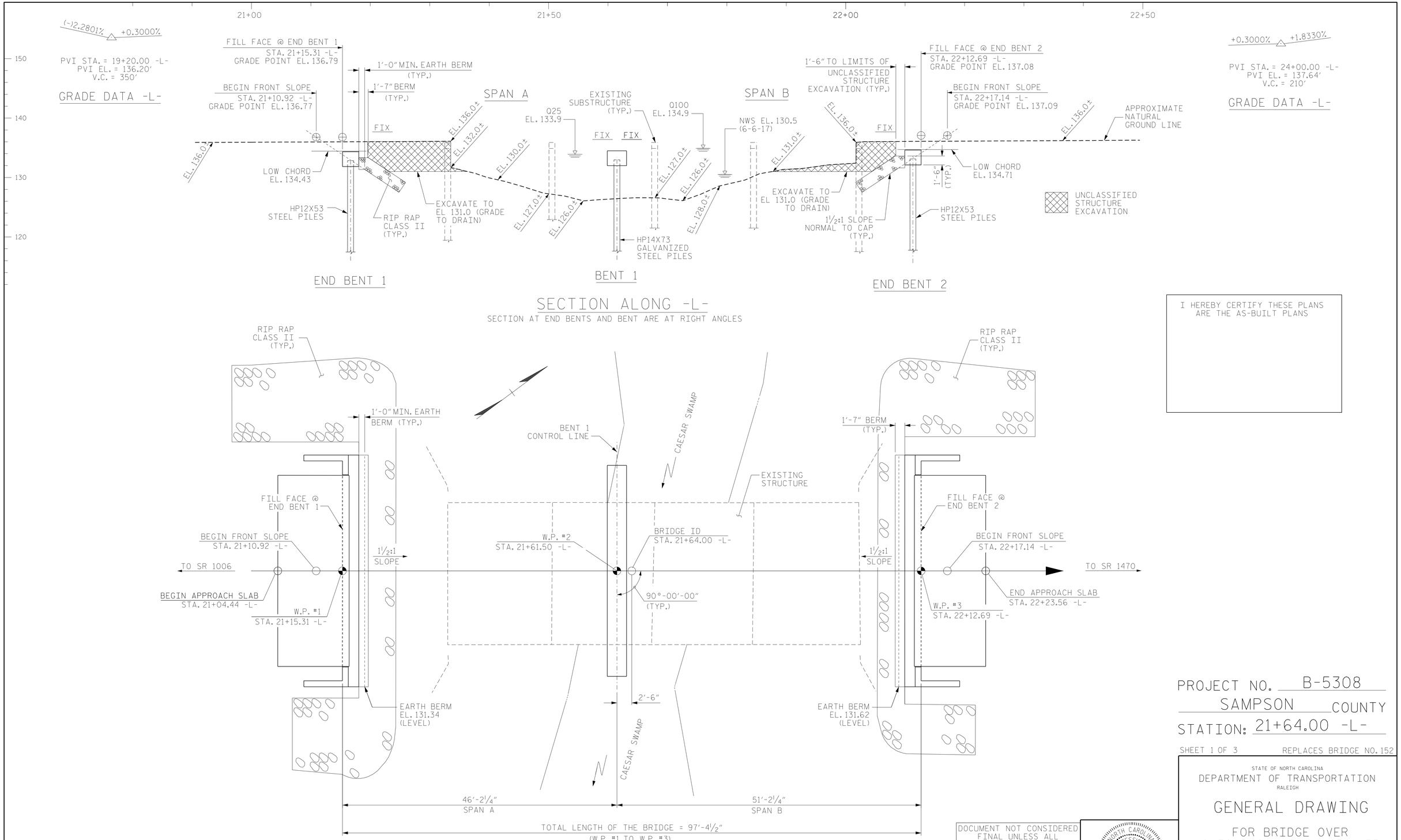

I HEREBY CERTIFY THESE PLANS ARE THE AS-BUILT PLANS

PROJECT NO. B-5308

SAMPSON COUNTY

STATION: 21+64.00 -L-

SHEET 1 OF 3 REPLACES BRIDGE NO. 152

STATE OF NORTH CAROLINA
DEPARTMENT OF TRANSPORTATION
RALEIGH

GENERAL DRAWING

FOR BRIDGE OVER
CAESAR SWAMP ON SR 1455
BETWEEN SR 1470 & SR 1006

DOCUMENT NOT CONSIDERED FINAL UNLESS ALL SIGNATURES COMPLETED

CDM Smith
CDM SMITH
5400 Glenwood Avenue, Suite 400
Raleigh, NC 27612-3228
NC COA No. F-1255

DRAWN BY : VDK DATE : 8/18
CHECKED BY : THF DATE : 8/18
DESIGN ENGINEER : VDK DATE : 8/18

DWG. No.

10/11/2019
NORTH CAROLINA PROFESSIONAL SEAL 16301 ENGINEER TING H. FANG
DocuSigned by: Ting H. Fang
03E43C9AEA60462...

REVISIONS								SHEET NO.
NO.	BY:	DATE:	NO.	BY:	DATE:			S-01
1			3					TOTAL SHEETS
2			4					19

FILE: C:\pw_pll\boesch\jv\d1302531\401_001_17BP3479_SMU_GDD1_001.dgn
DATE: 10/10/2019 11:02:14 AM

DocuSign Envelope ID: C919E33C-6218-4D4E-8ADF-F65E8C49C312

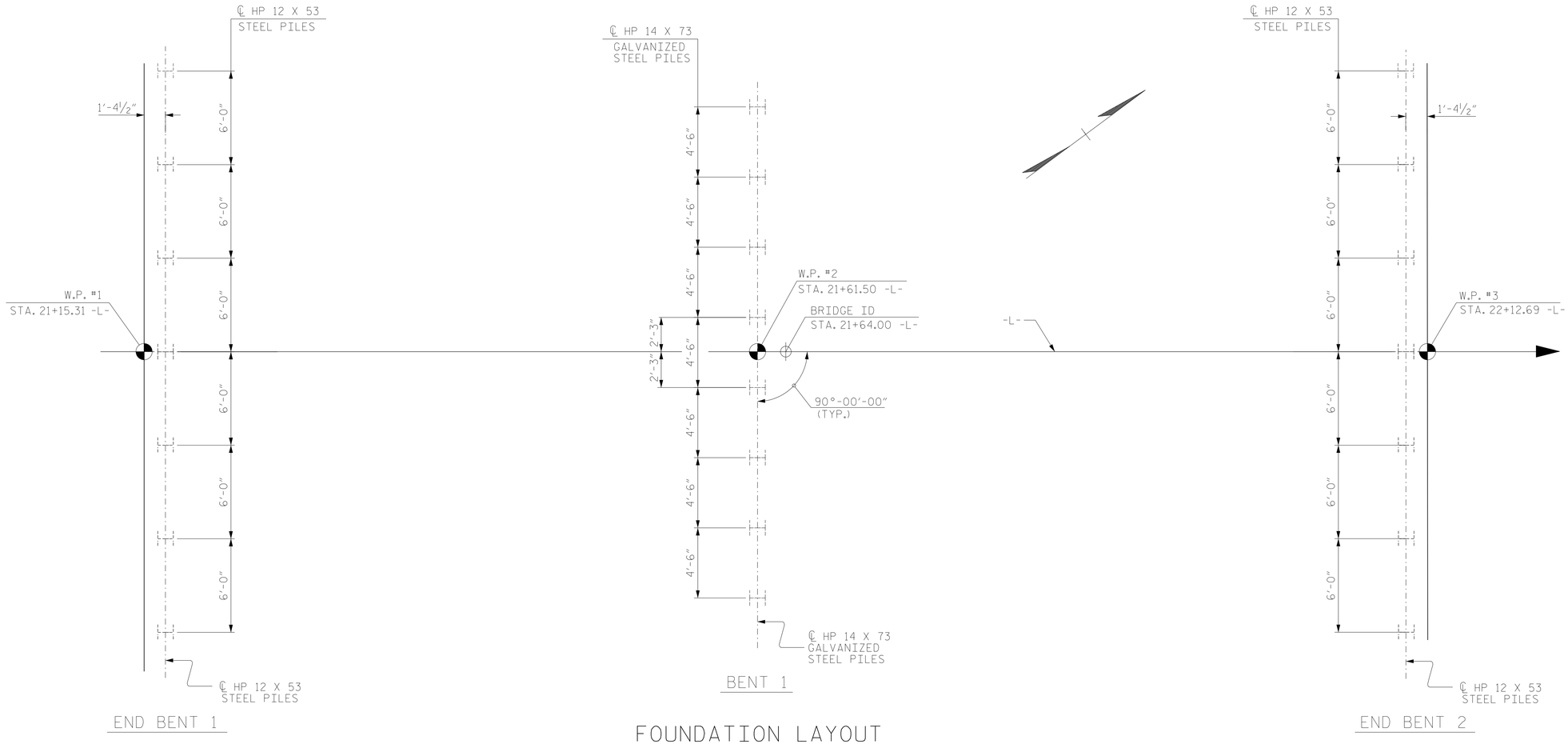

FOUNDATION LAYOUT

DIMENSIONS LOCATING PILES ARE SHOWN TO THE CENTERLINE OF PILES.
ALL PILES ARE VERTICAL

NOTES

FOR PILES, SEE SECTION 450 OF THE STANDARD SPECIFICATIONS.

PILES AT END BENT 1 ARE DESIGNED FOR A FACTORED RESISTANCE OF 61 TONS PER PILE.

PILES AT BENT 1 ARE DESIGNED FOR A FACTORED RESISTANCE OF 118 TONS PER PILE.

PILES AT END BENT 2 ARE DESIGNED FOR A FACTORED RESISTANCE OF 67 TONS PER PILE.

DRIVE PILES AT END BENT 1 TO A REQUIRED DRIVING RESISTANCE OF 105 TONS PER PILE.

DRIVE PILES AT BENT 1 TO A REQUIRED DRIVING RESISTANCE OF 220 TONS PER PILE. THIS REQUIRED DRIVING RESISTANCE INCLUDES ADDITIONAL RESISTANCE FOR SCOUR.

DRIVE PILES AT END BENT 2 TO A REQUIRED DRIVING RESISTANCE OF 115 TONS PER PILE.

INSTALL PILES AT BENT 1 TO A TIP ELEVATION NO HIGHER THAN 92.0 FT.

THE SCOUR CRITICAL ELEVATION FOR BENT 1 IS ELEVATION 116.0 FT. SCOUR CRITICAL ELEVATIONS ARE USED TO MONITOR POSSIBLE SCOUR PROBLEM DURING THE LIFE OF THE STRUCTURE.

TESTING PILES WITH THE PDA DURING DRIVING, RESTRIKING OR REDRIVING MAY BE REQUIRED. THE ENGINEER WILL DETERMINE THE NEED FOR PDA TESTING. FOR PDA TESTING, SEE SECTION 450 OF THE STANDARD SPECIFICATIONS.

PROJECT NO. B-5308
SAMPSON COUNTY
STATION: 21+64.00 -L-

SHEET 2 OF 3

DOCUMENT NOT CONSIDERED FINAL UNLESS ALL SIGNATURES COMPLETED

CDM Smith
CDM SMITH
5400 Glenwood Avenue, Suite 400
Raleigh, NC 27612-3228
NC COA No. F-1255

DRAWN BY : VDK DATE : 8/18
CHECKED BY : THF DATE : 8/18
DESIGN ENGINEER : VDK DATE : 8/18

DWG. No.

10/11/2019
NORTH CAROLINA PROFESSIONAL SEAL 16301 ENGINEER TING-YUSIUNG FANG
DocuSigned by: Ting H. Fang
60E43C9AEA80462...

STATE OF NORTH CAROLINA
DEPARTMENT OF TRANSPORTATION
RALEIGH

GENERAL DRAWING

FOR BRIDGE OVER
CAESAR SWAMP ON SR 1455
BETWEEN SR 1470 & SR 1006

REVISIONS						SHEET NO.
NO.	BY:	DATE:	NO.	BY:	DATE:	S-02
1			3			TOTAL SHEETS
2			4			19

FILE: c:\pw_pf\boescfcp\d1302533\401_003_17BP3R79_SMU_GD02_002.dgn
DATE: 10/10/2019 11:02:22 AM

DocuSign Envelope ID: C919E33C-6218-4D4E-8ADF-F65E8C49C312

TOTAL BILL OF MATERIAL

	REMOVAL OF EXISTING STRUCTURE	ASBESTOS ASSESSMENT	PDA TESTING	UNCLASSIFIED STRUCTURE EXCAVATION	CLASS A CONCRETE	BRIDGE APPROACH SLABS	REINFORCING STEEL	PILE DRIVING EQUIPMENT SETUP FOR HP 12X53 STEEL PILES	PILE DRIVING EQUIPMENT SETUP FOR HP 14X73 GALVANIZED STEEL PILES	HP 12 X 53 STEEL PILES		HP 14 X 73 GALVANIZED STEEL PILES		PILE REDRIVES	VERTICAL CONCRETE BARRIER RAIL	RIP RAP CLASS II (2'-0" THICK)	GEOTEXTILE FOR DRAINAGE	ELASTOMERIC BEARINGS	3'-0" X 1'-9" PRESTRESSED CONCRETE CORED SLABS		FIBER OPTIC CONDUIT SYSTEM
	LUMP SUM	LUMP SUM	EA.	LUMP SUM	CU. YDS.	LUMP SUM	LBS.	EA.	EA.	NO.	LIN. FT.	NO.	LIN. FT.	EA.	LIN. FT.	TON	SQ. YD.	LUMP SUM	NO.	LIN. FT.	LIN. FT.
SUPERSTRUCTURE															190.25			LUMP SUM	22	1,045	186.25
END BENT 1				LUMP SUM	14.2		2,115	7		7	385.0			4		100	110				
BENT 1					10.7		2,136		8			8	600.0	4							
END BENT 2				LUMP SUM	14.2		2,115	7		7	385.0			4		90	100				
TOTAL	LUMP SUM	LUMP SUM	1	LUMP SUM	39.1	LUMP SUM	6,366	14	8	14	770.0	8	600.0	12	190.25	190	210	LUMP SUM	22	1,045	186.25

B.M. #2: BENCH NAIL IN BASE OF 24" OAK, 47.14' LEFT OF STA. 22+57.49 -L-, EL. 134.96

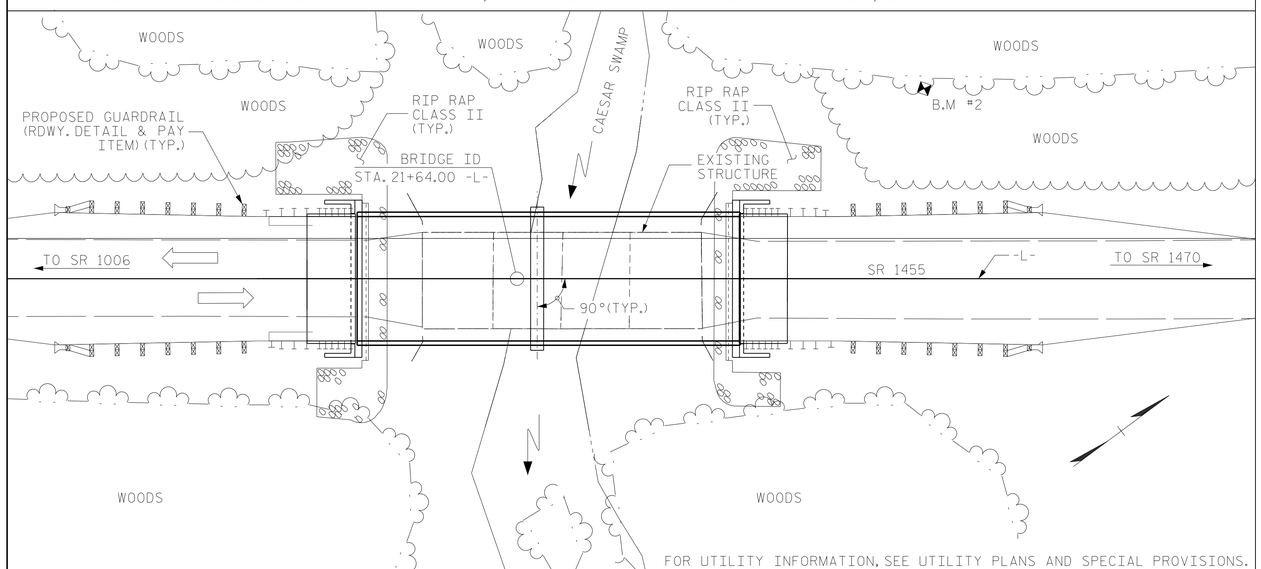

LOCATION SKETCH

NOTES:

ASSUMED LIVE LOAD = HL-93 OR ALTERNATE LOADING.

THIS BRIDGE HAS BEEN DESIGNED IN ACCORDANCE WITH THE AASHTO LRFD BRIDGE DESIGN SPECIFICATIONS

THIS BRIDGE IS LOCATED IN SEISMIC PERFORMANCE ZONE 1.

FOR OTHER DESIGN DATA AND GENERAL NOTES, SEE SHEET SN.

FOR EROSION CONTROL MEASURES SEE EROSION CONTROL PLANS.

THIS STRUCTURE HAS BEEN DESIGNED IN ACCORDANCE WITH "HEC-18 EVALUATING SCOUR AT BRIDGES".

THIS BRIDGE SHALL BE CONSTRUCTED USING TOP-DOWN CONSTRUCTION METHODS. THE USE OF A TEMPORARY CAUSEWAY OR WORK BRIDGE IS NOT PERMITTED.

REMOVAL OF THE EXISTING BRIDGE SHALL BE PERFORMED SO AS NOT TO ALLOW DEBRIS TO FALL INTO THE WATER. THE CONTRACTOR SHALL REMOVE THE BRIDGE AND SUBMIT PLANS FOR DEMOLITION IN ACCORDANCE WITH ARTICLE 402-2 OF THE STANDARD SPECIFICATIONS.

THE SUBSTRUCTURE OF THE EXISTING BRIDGE INDICATED ON THE PLANS IS FROM THE BEST INFORMATION AVAILABLE. SINCE THIS INFORMATION IS SHOWN FOR THE CONVENIENCE OF THE CONTRACTOR, THE CONTRACTOR SHALL HAVE NO CLAIM WHATSOEVER AGAINST THE DEPARTMENT OF TRANSPORTATION FOR ANY DELAYS OR ADDITIONAL COST INCURRED BASED ON DIFFERENCES BETWEEN THE EXISTING BRIDGE SUBSTRUCTURE SHOWN ON THE PLANS AND THE ACTUAL CONDITIONS AT THE PROJECT SITE.

FOR BENT 1, ONLY PARTIAL GALVANIZING OF THE PILES IS REQUIRED. SEE BENT 1 SHEET FOR REQUIRED GALVANIZED LENGTHS. PAYMENT FOR PARTIALLY GALVANIZED PILES WILL BE MADE UNDER THE CONTRACT UNIT PRICE FOR GALVANIZED STEEL PILES.

THE MATERIAL SHOWN IN THE CROSS-HATCHED AREA SHALL BE EXCAVATED FOR A DISTANCE OF 23 FT. BOTH SIDES AT END BENT 1 AND 25 FT. LEFT SIDE, 43 FT. RIGHT SIDE AT END BENT 2 OF CENTERLINE ROADWAY AS DIRECTED BY THE ENGINEER. THIS WORK WILL BE PAID FOR AT THE CONTRACT LUMP SUM PRICE FOR UNCLASSIFIED STRUCTURE EXCAVATION. SEE SECTION 412 OF THE STANDARD SPECIFICATIONS.

THE EXISTING STRUCTURE CONSISTING OF 4 SPANS: 1 @ 17'-10", 2 @ 17'-0" & 1 @ 18'-0" WITH A CLEAR ROADWAY WIDTH OF 24'-0" AND RC FLOOR ON TIMBER JOISTS; SUBSTRUCTURE CONSISTING OF TIMBER CAPS ON TIMBER PILES AND STEEL CRUTCH PILES AT END BENTS AND INTERIOR BENTS LOCATED AT THE SITE OF THE PROPOSED BRIDGE SHALL BE REMOVED. THE EXISTING BRIDGE IS PRESENTLY POSTED FOR LOAD LIMIT.

FOR FALSEWORK AND FORMWORK, SEE SPECIAL PROVISIONS.

FOR SUBMITTAL OF WORKING DRAWINGS, SEE SPECIAL PROVISIONS.

FOR CRANE SAFETY, SEE SPECIAL PROVISIONS.

FOR GROUT FOR STRUCTURES, SEE SPECIAL PROVISIONS.
FOR FIBER OPTIC CONDUIT SYSTEM, SEE SPECIAL PROVISIONS.

FOR ASBESTOS ASSESSMENT FOR BRIDGE DEMOLITION AND RENOVATION ACTIVITIES, SEE SPECIAL PROVISIONS.

FOR FIBER OPTIC CONDUIT SYSTEM, SEE SPECIAL PROVISIONS.

ASPHALT WEARING SURFACE IS INCLUDED IN ROADWAY QUANTITY ON ROADWAY PLANS.

HYDRAULIC DATA

DESIGN DISCHARGE	= 1200 CFS
FREQUENCY OF DESIGN FLOOD	= 25 YR.
DESIGN HIGH WATER ELEVATION	= 133.9 FT.
DRAINAGE AREA	= 12.8 SQ. MI.
BASE DISCHARGE (Q100)	= 1700 CFS
BASE HIGH WATER ELEVATION	= 134.9 FT.

OVERTOPPING FLOOD DATA

OVERTOPPING DISCHARGE	= 3300 CFS
FREQUENCY OF OVERTOPPING FLOOD	= 500+ YRS.
OVERTOPPING FLOOD ELEVATION	= 136.7 FT. *

* ELEVATION IS TAKEN AT STA. 20+54.3 - L- SAG POINT.

PROJECT NO. B-5308
SAMPSON COUNTY
STATION: 21+64.00 -L-

SHEET 3 OF 3

STATE OF NORTH CAROLINA
DEPARTMENT OF TRANSPORTATION
RALEIGH

GENERAL DRAWING

FOR BRIDGE OVER
CAESAR SWAMP ON SR 1455
BETWEEN SR 1470 & SR 1006

DOCUMENT NOT CONSIDERED FINAL UNLESS ALL SIGNATURES COMPLETED

CDM Smith
CDM SMITH
5400 Glenwood Avenue, Suite 400
Raleigh, NC 27612-3228
NC COA No. F-1255

DRAWN BY : VDK DATE : 8/18
CHECKED BY : THF DATE : 8/18
DESIGN ENGINEER : VDK DATE : 8/18

DWG. No.

10/11/2019
NORTH CAROLINA PROFESSIONAL SEAL 16301 ENGINEER TING H. FANG
DocuSigned by: Ting H. Fang
60E43C8AEA80462...

REVISIONS						SHEET NO.
NO.	BY:	DATE:	NO.	BY:	DATE:	S-03
1			3			TOTAL SHEETS
2			4			19

FILE: C:\pw_pif\boesch\pf13025\401_005_17BP3R79_SAU_GD03_003.dgn
DATE: 10/10/2019 11:02:31 AM

DocuSign Envelope ID: C919E33C-6218-4D4E-8ADF-F65E8C49C312

LOAD AND RESISTANCE FACTOR RATING (LRFD) SUMMARY FOR PRESTRESSED CONCRETE CORED SLAB UNITS

LEVEL		VEHICLE	WEIGHT (W) (TONS)	CONTROLLING LOAD RATING	MINIMUM RATING FACTORS (RF)	TONS = W X RF	STRENGTH I LIMIT STATE											SERVICE III LIMIT STATE						COMMENT NUMBER
								MOMENT					SHEAR						MOMENT					
							LIVELOAD FACTORS	DISTRIBUTION FACTORS (DF)	RATING FACTOR	SPAN	GIRDER LOCATION	DISTANCE FROM LEFT END OF SPAN (ft)	DISTRIBUTION FACTORS (DF)	RATING FACTOR	SPAN	GIRDER LOCATION	DISTANCE FROM LEFT END OF SPAN (ft)	LIVELOAD FACTORS	DISTRIBUTION FACTORS (DF)	RATING FACTOR	SPAN	GIRDER LOCATION	DISTANCE FROM LEFT END OF SPAN (ft)	
DESIGN LOAD RATING		HL-93(Inv)	N/A	1	1.088	--	1.75	0.277	1.34	45'	EL	22	0.539	1.23	45'	EL	2.2	0.80	0.277	1.09	45'	EL	22	
		HL-93(Opr)	N/A	--	1.590	--	1.35	0.277	1.74	45'	EL	22	0.539	1.59	45'	EL	2.2	N/A	--	--	--	--	--	
		HS-20(Inv)	36.000	2	1.336	48.104	1.75	0.277	1.65	45'	EL	22	0.539	1.45	45'	EL	2.2	0.80	0.277	1.34	45'	EL	22	
		HS-20(Opr)	36.000	--	1.882	67.763	1.35	0.277	2.14	45'	EL	22	0.539	1.88	45'	EL	2.2	N/A	--	--	--	--	--	
LEGAL LOAD RATING	SV	SNSH	13.500	--	2.611	35.252	1.4	0.277	4.02	45'	EL	22	0.539	4.01	45'	EL	2.2	0.80	0.277	2.61	45'	EL	22	
		SNGARBS2	20.000	--	2.108	42.166	1.4	0.277	3.25	45'	EL	22	0.539	2.94	45'	EL	2.2	0.80	0.277	2.11	45'	EL	22	
		SNAGRIS2	22.000	--	2.067	45.466	1.4	0.277	3.15	45'	EL	17.6	0.539	2.77	45'	EL	2.2	0.80	0.277	2.07	45'	EL	22	
		SNCOTTS3	27.250	--	1.304	35.527	1.4	0.277	2.01	45'	EL	22	0.539	2.01	45'	EL	2.2	0.80	0.277	1.30	45'	EL	22	
		SNAGGRS4	34.925	--	1.150	40.181	1.4	0.277	1.77	45'	EL	22	0.539	1.74	45'	EL	2.2	0.80	0.277	1.15	45'	EL	22	
		SNS5A	35.550	--	1.121	39.841	1.4	0.277	1.73	45'	EL	22	0.539	1.79	45'	EL	2.2	0.80	0.277	1.12	45'	EL	22	
		SNS6A	39.950	--	1.056	42.175	1.4	0.277	1.63	45'	EL	22	0.539	1.67	45'	EL	2.2	0.80	0.277	1.06	45'	EL	22	
		SNS7B	42.000	3	1.006	42.268	1.4	0.277	1.55	45'	EL	22	0.539	1.68	45'	EL	2.2	0.80	0.277	1.01	45'	EL	22	
	TTST	TNAGRIT3	33.000	--	1.296	42.759	1.4	0.277	2.00	45'	EL	22	0.539	1.96	45'	EL	2.2	0.80	0.277	1.30	45'	EL	22	
		TNT4A	33.075	--	1.309	43.305	1.4	0.277	2.02	45'	EL	22	0.539	1.88	45'	EL	2.2	0.80	0.277	1.31	45'	EL	22	
		TNT6A	41.600	--	1.099	45.712	1.4	0.277	1.69	45'	EL	22	0.539	1.83	45'	EL	2.2	0.80	0.277	1.10	45'	EL	22	
		TNT7A	42.000	--	1.120	47.043	1.4	0.277	1.73	45'	EL	22	0.539	1.69	45'	EL	2.2	0.80	0.277	1.12	45'	EL	22	
		TNT7B	42.000	--	1.166	48.975	1.4	0.277	1.80	45'	EL	22	0.539	1.61	45'	EL	2.2	0.80	0.277	1.17	45'	EL	22	
		TNAGRIT4	43.000	--	1.111	47.757	1.4	0.277	1.71	45'	EL	22	0.539	1.55	45'	EL	2.2	0.80	0.277	1.11	45'	EL	22	
		TNAGT5A	45.000	--	1.033	46.505	1.4	0.277	1.59	45'	EL	22	0.539	1.59	45'	EL	2.2	0.80	0.277	1.03	45'	EL	22	
		TNAGT5B	45.000	--	1.009	45.408	1.4	0.277	1.56	45'	EL	22	0.539	1.47	45'	EL	2.2	0.80	0.277	1.01	45'	EL	22	

LOAD FACTORS:

DESIGN LOAD RATING FACTORS	LIMIT STATE	γ_{DC}	γ_{DW}
	STRENGTH I	1.25	1.50
	SERVICE III	1.00	1.00

NOTES:

MINIMUM RATING FACTORS ARE BASED ON THE STRENGTH I AND SERVICE III LIMIT STATES.

ALLOWABLE STRESSES FOR SERVICE III LIMIT STATE ARE AS REQUIRED FOR DESIGN.

COMMENTS:

1.
2.
3.
4.

CONTROLLING LOAD RATING

1 DESIGN LOAD RATING (HL-93)

2 DESIGN LOAD RATING (HS-20)

3 LEGAL LOAD RATING **

** SEE CHART FOR VEHICLE TYPE

GIRDER LOCATION

I - INTERIOR GIRDER
EL - EXTERIOR LEFT GIRDER
ER - EXTERIOR RIGHT GIRDER

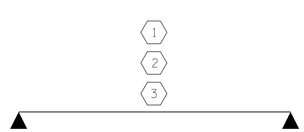

LRFR SUMMARY

FOR SPAN A

PROJECT NO. B-5308

SAMPSON COUNTY

STATION: 21+64.00 -L-

SHEET 1 OF 2

DOCUMENT NOT CONSIDERED FINAL UNLESS ALL SIGNATURES COMPLETED

CDM Smith

CDM SMITH
5400 Glenwood Avenue, Suite 400
Raleigh, NC 27612-3228
NC COA No. F-1255

DRAWN BY : VDK DATE : 8/18
CHECKED BY : THF DATE : 8/18
DESIGN ENGINEER : VDK DATE : 8/18

DWG. No.

10/11/2019

NORTH CAROLINA PROFESSIONAL SEAL 16301 ENGINEER TING HSUNG FANG

DocuSigned by: Ting H. Fang
60E43C9AEA80462...

STATE OF NORTH CAROLINA
DEPARTMENT OF TRANSPORTATION
RALEIGH

STANDARD

LRFR SUMMARY FOR 45' CORED SLAB UNIT 90° SKEW SPAN A

(NON-INTERSTATE TRAFFIC)

REVISIONS						SHEET NO.
NO.	BY:	DATE:	NO.	BY:	DATE:	S-04
1			3			TOTAL SHEETS
2			4			19

FILE: c:\pw_pll\bosscho\d1302531\401_007_17BP3R79_SMU_LRFR_004.dgn
DATE: 10/10/2019 11:02:38 AM

STD. NO. 21LRFR1_75&90S_45L

DocuSign Envelope ID: C919E33C-6218-4D4E-8ADF-F65E8C49C312

LOAD AND RESISTANCE FACTOR RATING (LRFD) SUMMARY FOR PRESTRESSED CONCRETE CORED SLAB UNITS

LEVEL		VEHICLE	WEIGHT (W) (TONS)	CONTROLLING LOAD RATING	MINIMUM RATING FACTORS (RF)	TONS = W X RF	STRENGTH I LIMIT STATE											SERVICE III LIMIT STATE						COMMENT NUMBER
								MOMENT					SHEAR						MOMENT					
							LIVELOAD FACTORS	DISTRIBUTION FACTORS (DF)	RATING FACTOR	SPAN	GIRDER LOCATION	DISTANCE FROM LEFT END OF SPAN (ft)	DISTRIBUTION FACTORS (DF)	RATING FACTOR	SPAN	GIRDER LOCATION	DISTANCE FROM LEFT END OF SPAN (ft)	LIVELOAD FACTORS	DISTRIBUTION FACTORS (DF)	RATING FACTOR	SPAN	GIRDER LOCATION	DISTANCE FROM LEFT END OF SPAN (ft)	
DESIGN LOAD RATING		HL-93(Inv)	N/A	1	1.394	--	1.75	0.276	1.57	50'	EL	24.5	0.531	1.39	50'	EL	2.45	0.80	0.276	1.44	50'	EL	24.5	
		HL-93(Opr)	N/A	--	1.807	--	1.35	0.276	2.03	50'	EL	24.5	0.531	1.81	50'	EL	2.45	N/A	--	--	--	--	--	
		HS-20(Inv)	36.000	2	1.667	60.007	1.75	0.276	1.95	50'	EL	24.5	0.531	1.67	50'	EL	2.45	0.80	0.276	1.79	50'	EL	24.5	
		HS-20(Opr)	36.000	--	2.161	77.787	1.35	0.276	2.52	50'	EL	24.5	0.531	2.16	50'	EL	2.45	N/A	--	--	--	--	--	
LEGAL LOAD RATING	SV	SNSH	13.500	--	3.635	49.079	1.4	0.276	4.95	50'	EL	24.5	0.531	4.70	50'	EL	2.45	0.80	0.276	3.64	50'	EL	24.5	
		SNGARBS2	20.000	--	2.871	57.420	1.4	0.276	3.91	50'	EL	24.5	0.531	3.42	50'	EL	2.45	0.80	0.276	2.87	50'	EL	24.5	
		SNAGRIS2	22.000	--	2.778	61.109	1.4	0.276	3.78	50'	EL	19.6	0.531	3.21	50'	EL	2.45	0.80	0.276	2.78	50'	EL	24.5	
		SNCOTTS3	27.250	--	1.814	49.418	1.4	0.276	2.47	50'	EL	24.5	0.531	2.36	50'	EL	2.45	0.80	0.276	1.81	50'	EL	24.5	
		SNAGGRS4	34.925	--	1.577	55.063	1.4	0.276	2.15	50'	EL	24.5	0.531	2.01	50'	EL	2.45	0.80	0.276	1.58	50'	EL	24.5	
		SNS5A	35.550	--	1.537	54.657	1.4	0.276	2.09	50'	EL	24.5	0.531	2.07	50'	EL	2.45	0.80	0.276	1.54	50'	EL	24.5	
		SNS6A	39.950	--	1.438	57.430	1.4	0.276	1.96	50'	EL	24.5	0.531	1.91	50'	EL	2.45	0.80	0.276	1.44	50'	EL	24.5	
		SNS7B	42.000	--	1.370	57.540	1.4	0.276	1.87	50'	EL	24.5	0.531	1.91	50'	EL	2.45	0.80	0.276	1.37	50'	EL	24.5	
	TTST	TNAGRIT3	33.000	--	1.761	58.118	1.4	0.276	2.40	50'	EL	24.5	0.531	2.25	50'	EL	2.45	0.80	0.276	1.76	50'	EL	24.5	
		TNT4A	33.075	--	1.777	58.759	1.4	0.276	2.42	50'	EL	24.5	0.531	2.17	50'	EL	2.45	0.80	0.276	1.78	50'	EL	24.5	
		TNT6A	41.600	--	1.480	61.558	1.4	0.276	2.01	50'	EL	24.5	0.531	2.08	50'	EL	2.45	0.80	0.276	1.48	50'	EL	24.5	
		TNT7A	42.000	--	1.502	63.087	1.4	0.276	2.05	50'	EL	24.5	0.531	1.94	50'	EL	2.45	0.80	0.276	1.50	50'	EL	24.5	
		TNT7B	42.000	--	1.566	65.773	1.4	0.276	2.13	50'	EL	24.5	0.531	1.84	50'	EL	2.45	0.80	0.276	1.57	50'	EL	24.5	
		TNAGRIT4	43.000	--	1.486	63.902	1.4	0.276	2.02	50'	EL	24.5	0.531	1.77	50'	EL	2.45	0.80	0.276	1.49	50'	EL	24.5	
		TNAGT5A	45.000	--	1.388	62.470	1.4	0.276	1.89	50'	EL	24.5	0.531	1.80	50'	EL	2.45	0.80	0.276	1.39	50'	EL	24.5	
		TNAGT5B	45.000	3	1.360	61.206	1.4	0.276	1.85	50'	EL	24.5	0.531	1.68	50'	EL	2.45	0.80	0.276	1.36	50'	EL	24.5	

LOAD FACTORS:

DESIGN LOAD RATING FACTORS	LIMIT STATE	γ_{DC}	γ_{DW}
	STRENGTH I	1.25	1.50
	SERVICE III	1.00	1.00

NOTES:

MINIMUM RATING FACTORS ARE BASED ON THE STRENGTH I AND SERVICE III LIMIT STATES.

ALLOWABLE STRESSES FOR SERVICE III LIMIT STATE ARE AS REQUIRED FOR DESIGN.

COMMENTS:

1.
2.
3.
4.

(#) CONTROLLING LOAD RATING

(1) DESIGN LOAD RATING (HL-93)

(2) DESIGN LOAD RATING (HS-20)

(3) LEGAL LOAD RATING **

** SEE CHART FOR VEHICLE TYPE

GIRDER LOCATION

I - INTERIOR GIRDER
EL - EXTERIOR LEFT GIRDER
ER - EXTERIOR RIGHT GIRDER

LRFR SUMMARY

FOR SPAN B

PROJECT NO. B-5308

SAMPSON COUNTY

STATION: 21+64.00 -L-

SHEET 2 OF 2

DOCUMENT NOT CONSIDERED FINAL UNLESS ALL SIGNATURES COMPLETED

CDM Smith
CDM SMITH
5400 Glenwood Avenue, Suite 400
Raleigh, NC 27612-3228
NC COA No. F-1255

DRAWN BY : VDK DATE : 8/18
CHECKED BY : THF DATE : 8/18
DESIGN ENGINEER : VDK DATE : 8/18

DWG. No.

10/11/2019 NORTH CAROLINA PROFESSIONAL SEAL 16301 ENGINEER TING HSUNG FANG

DocuSigned by: Ting H. Fang 80E43C9AEA60462...

STATE OF NORTH CAROLINA
DEPARTMENT OF TRANSPORTATION
RALEIGH

STANDARD

LRFR SUMMARY FOR 50' CORED SLAB UNIT 90° SKEW SPAN B

(NON-INTERSTATE TRAFFIC)

REVISIONS						SHEET NO.
NO.	BY:	DATE:	NO.	BY:	DATE:	S-05
1			3			TOTAL SHEETS
2			4			19

FILE: c:\pw_pll\bosschjd\d1130253\401_009_17BP3R79_SMU_LRFR_005.dgn
DATE: 10/10/2019 11:02:46 AM

STD. NO. 21LRFR1_75&90S_50L

DocuSign Envelope ID: C919E33C-6218-4D4E-8ADF-F65E8C49C312

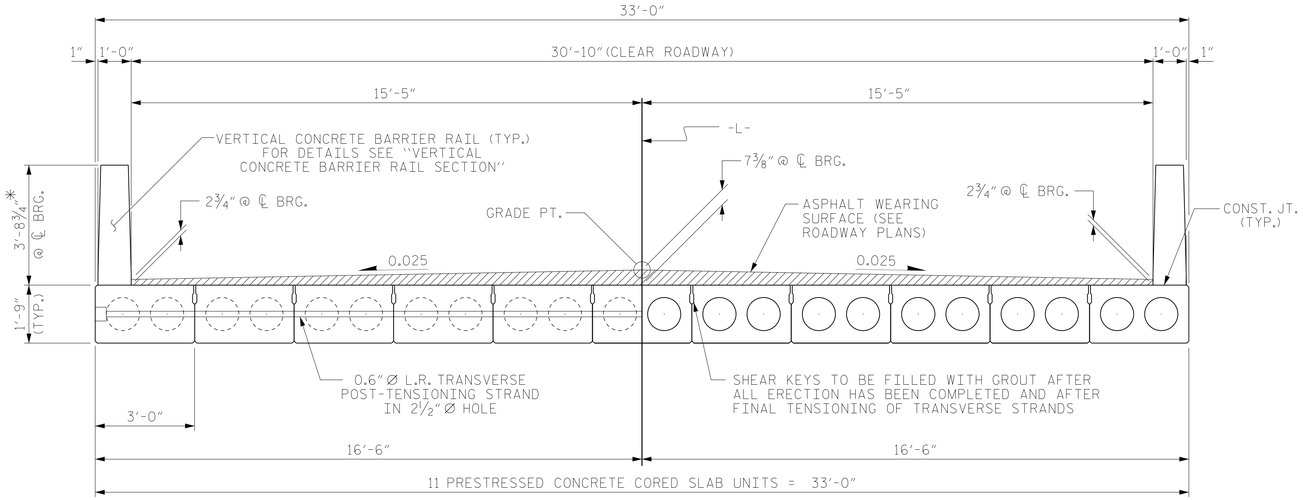

HALF SECTION
AT INTERMEDIATE DIAPHRAGMS

HALF SECTION
THROUGH VOIDS

TYPICAL SECTION

* - THE MAXIMUM BARRIER RAIL HEIGHT AND ASPHALT THICKNESS IS SHOWN. THE HEIGHT OF THE BARRIER RAIL AND ASPHALT THICKNESS VARIES WHILE THE TOP OF THE BARRIER RAIL FOLLOWS THE PROFILE OF THE GUTTERLINE. FOR RAIL HEIGHT DETAILS AND ASPHALT THICKNESS SEE THE "VERTICAL CONCRETE BARRIER RAIL SECTION" DETAIL.

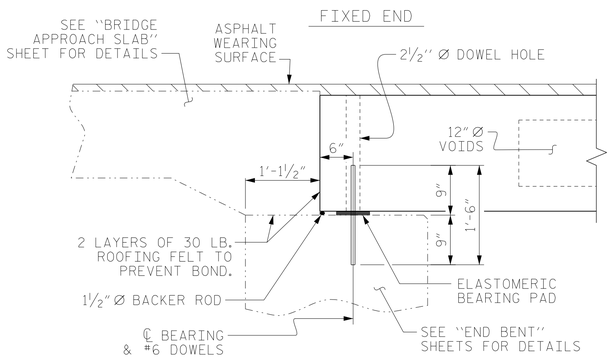

SECTION AT END BENT

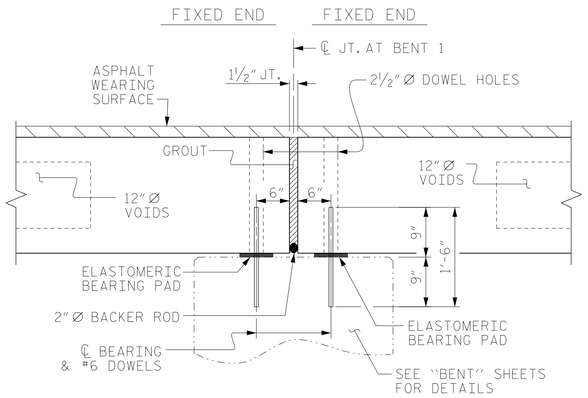

SECTION AT BENT 1

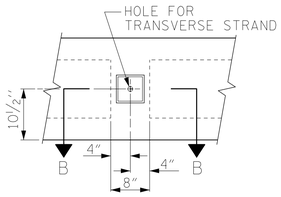

ELEVATION VIEW

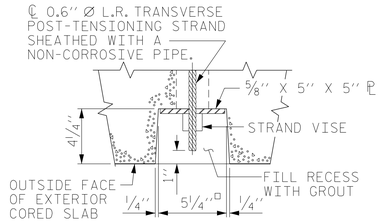

SECTION B-B

GROUTED RECESS AT END OF POST-TENSIONED STRAND OF CORED SLABS

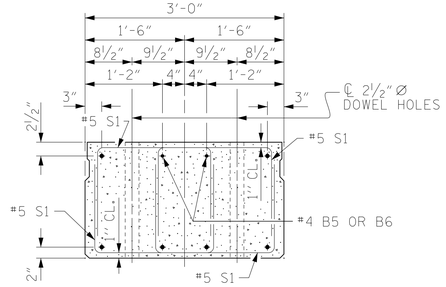

END ELEVATION

SHOWING PLACEMENT OF DOUBLE STIRRUPS AND LOCATION OF DOWEL HOLES. (STRAND LAYOUT NOT SHOWN.) INTERIOR SLAB UNIT SHOWN-EXTERIOR SLAB UNIT SIMILAR EXCEPT SHEAR KEY LOCATION.

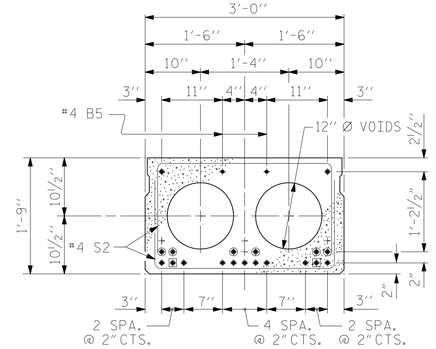

INTERIOR SLAB SECTION
SPAN A (45' UNIT)
(13 STRANDS REQUIRED)

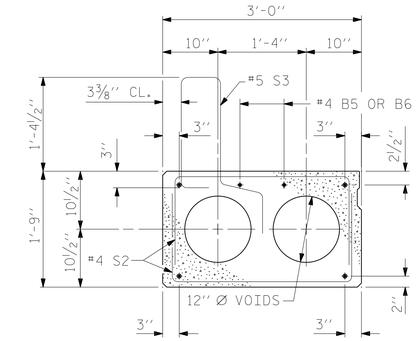

EXT. SLAB SECTION

(FOR PRESTRESSED STRAND LAYOUT, SEE INTERIOR SLAB SECTION.)

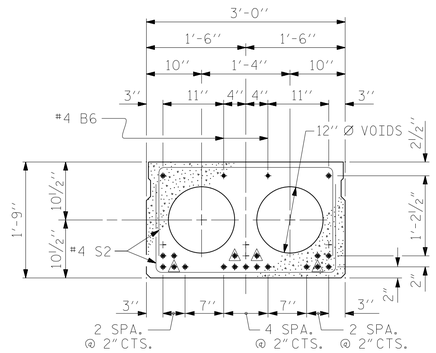

INTERIOR SLAB SECTION
SPAN B (50' UNIT)
(19 STRANDS REQUIRED)

0.6" Ø LOW RELAXATION STRAND LAYOUT

BOND SHALL BE BROKEN ON THESE STRANDS FOR A DISTANCE OF 6'-0" FROM END OF CORED SLAB UNIT. SEE STANDARD SPECIFICATIONS, ARTICLE 1078-7.

BOND SHALL BE BROKEN ON THESE STRANDS FOR A DISTANCE OF 2'-0" FROM END OF CORED SLAB UNIT. SEE STANDARD SPECIFICATIONS, ARTICLE 1078-7.

OPTIONAL FULL LENGTH DEBONDED STRANDS. THESE STRANDS ARE NOT REQUIRED. IF THE FABRICATOR CHOOSES TO INCLUDE THESE STRANDS IN THE CORED SLAB UNIT, THE STRANDS SHALL BE DEBONDED FOR THE FULL LENGTH OF THE UNIT AT NO ADDITIONAL COST. SEE STANDARD SPECIFICATIONS, ARTICLE 1078-7.

DEBONDING LEGEND

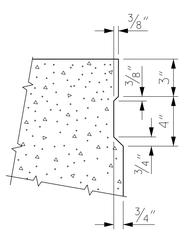

SHEAR KEY DETAIL

NOTE: OMIT SHEAR KEY ON OUTSIDE FACE OF EXTERIOR CORED SLABS.

PERMITTED THREADED INSERT CAST IN OUTSIDE FACE OF EXTERIOR UNIT AND RECESSED ⅜". SIZE TO BE DETERMINED BY CONTRACTOR.

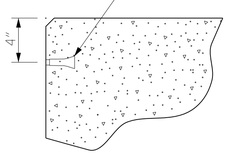

THREADED INSERT DETAIL

PROJECT NO. B-5308
SAMPSON COUNTY
STATION: 21+64.00 -L-

SHEET 1 OF 5

STATE OF NORTH CAROLINA
DEPARTMENT OF TRANSPORTATION
RALEIGH

3'-0" X 1'-9"
PRESTRESSED CONCRETE CORED SLAB UNIT
90° SKEW
SPANS A & B

DOCUMENT NOT CONSIDERED FINAL UNLESS ALL SIGNATURES COMPLETED

CDM Smith
CDM SMITH
5400 Glenwood Avenue, Suite 400
Raleigh, NC 27612-3228
NC COA No. F-1255

DRAWN BY : VDK DATE : 8/18
CHECKED BY : THF DATE : 8/18
DESIGN ENGINEER : VDK DATE : 8/18

DWG. No.

10/11/2019
NORTH CAROLINA PROFESSIONAL SEAL 16301 ENGINEER TING-HSIUNG FANG
DocuSigned by: Ting H. Fang
6EE43C9AEA60462...

REVISIONS						SHEET NO.
NO.	BY:	DATE:	NO.	BY:	DATE:	S-06
1			3			TOTAL SHEETS
2			4			19

FILE: c:\pw_pll\bosschjo\dl30253\401_011_178P3K79_SMU_CS1_006.dgn
DATE: 10/10/2019 11:03:30 AM

STD. NO. 21" PCS2_33_90S

DocuSign Envelope ID: C919E33C-6218-4D4E-8ADF-F65E8C49C312

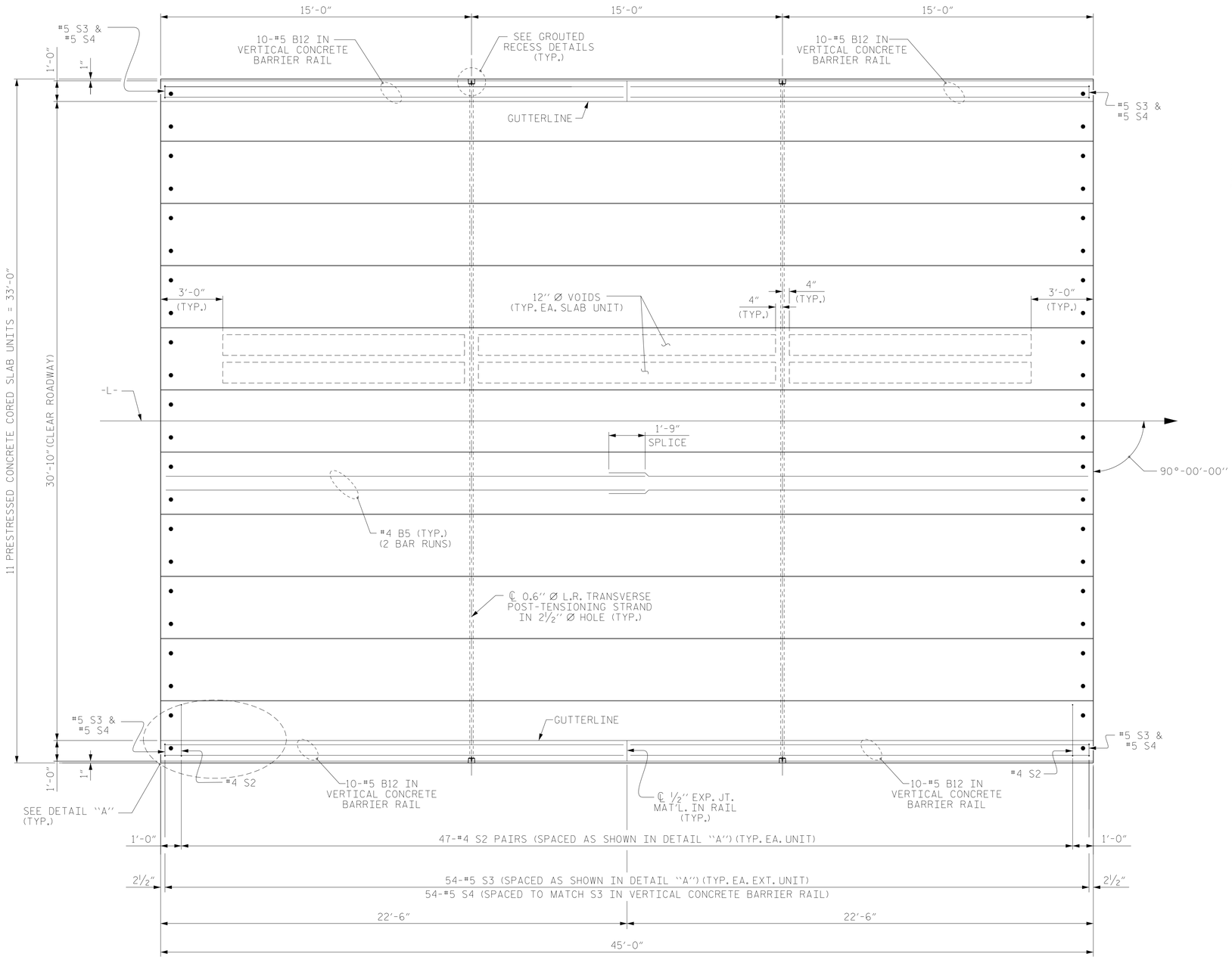

PLAN OF SPAN A

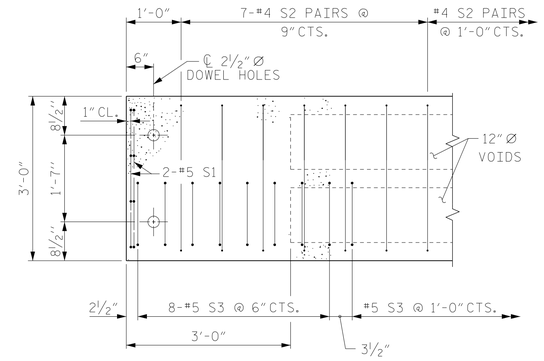

DETAIL "A"

(TYPICAL EACH END OF UNIT)
NOTE: EXTERIOR UNIT SHOWN - INTERIOR UNIT SIMILAR EXCEPT OMIT #5 S3 BARS.

PROJECT NO. B-5308
SAMPSON COUNTY
STATION: 21+64.00 -L-

SHEET 2 OF 5

STATE OF NORTH CAROLINA
DEPARTMENT OF TRANSPORTATION
RALEIGH

PLAN OF 45' UNIT
30'-10" CLEAR ROADWAY
90° SKEW

SPAN A

DOCUMENT NOT CONSIDERED FINAL UNLESS ALL SIGNATURES COMPLETED

CDM Smith
CDM SMITH
5400 Glenwood Avenue, Suite 400
Raleigh, NC 27612-3228
NC COA No. F-1255

DRAWN BY : VDK DATE : 8/18
CHECKED BY : THF DATE : 8/18
DESIGN ENGINEER : VDK DATE : 8/18

DWG. No.

10/11/2019
NORTH CAROLINA PROFESSIONAL SEAL 16301 ENGINEER TING HSUNG FANG
DocuSigned by: Ting H. Fang
65E43C8AEA60462...

REVISIONS						SHEET NO.
NO.	BY:	DATE:	NO.	BY:	DATE:	S-07
1			3			TOTAL SHEETS
2			4			19

STD. NO. 21" PCS_33_90S_45L

FILE: C:\pw_pif\boesfrjo\dt30253\401_013_178PSKF9_SMU_CS2_007.dgn
DATE: 10/10/2019 11:03:37 AM

DocuSign Envelope ID: C919E33C-6218-4D4E-8ADF-F65E8C49C312

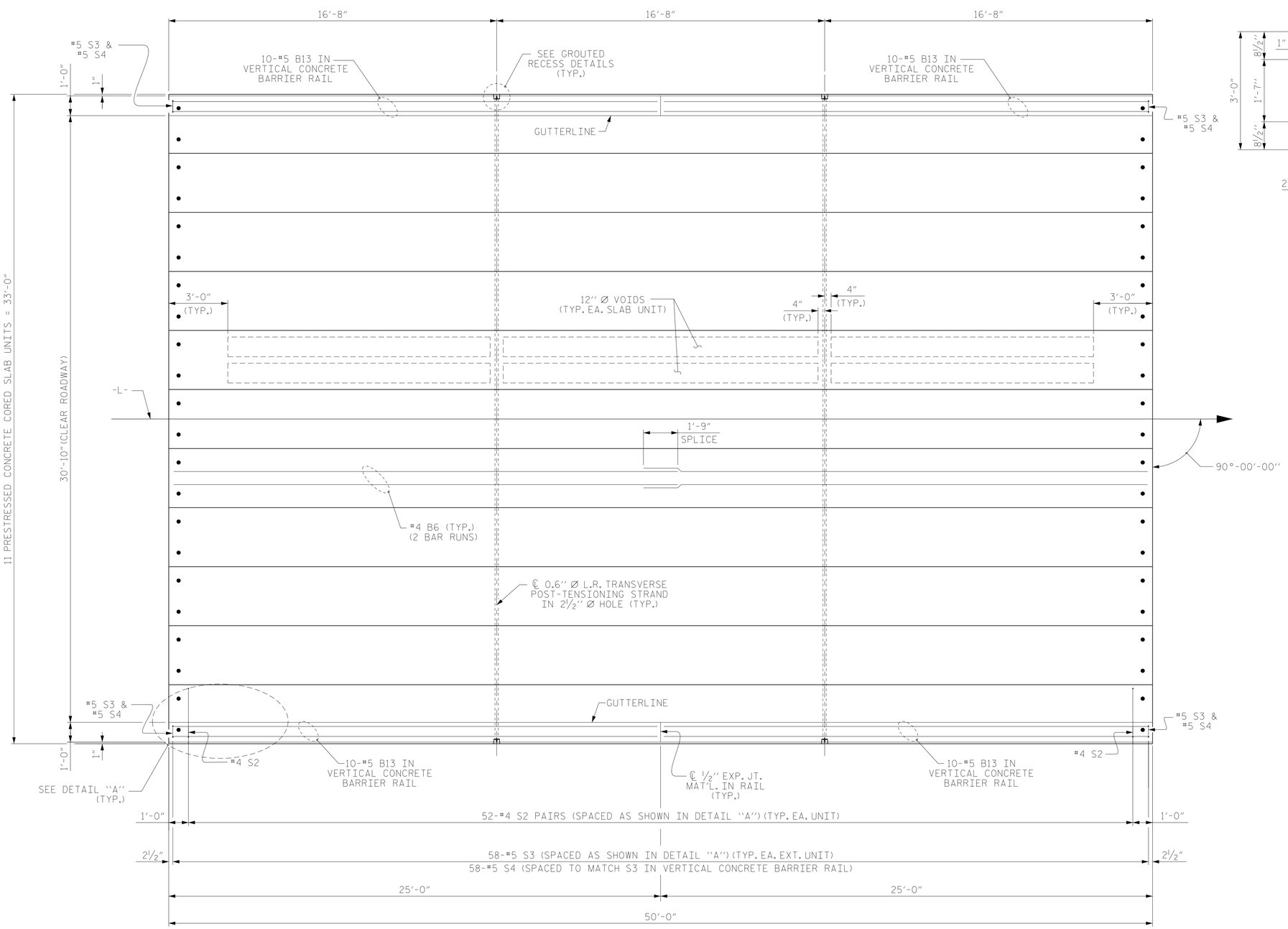

PLAN OF SPAN B

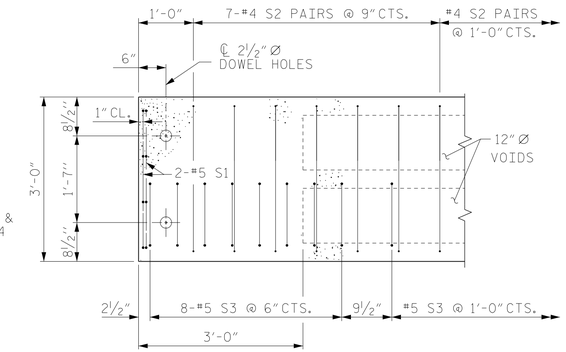

DETAIL "A"

(TYPICAL EACH END OF UNIT)
NOTE: EXTERIOR UNIT SHOWN - INTERIOR UNIT SIMILAR EXCEPT OMIT #5 S3 BARS.

PROJECT NO. B-5308
SAMPSON COUNTY
STATION: 21+64.00 -L-

SHEET 3 OF 5

STATE OF NORTH CAROLINA
DEPARTMENT OF TRANSPORTATION
RALEIGH

PLAN OF 50' UNIT
30'-10" CLEAR ROADWAY
90° SKEW

SPAN B

DOCUMENT NOT CONSIDERED FINAL UNLESS ALL SIGNATURES COMPLETED

CDM Smith
CDM SMITH
5400 Glenwood Avenue, Suite 400
Raleigh, NC 27612-3228
NC COA No. F-1255

DRAWN BY : VDK DATE : 8/18
CHECKED BY : THF DATE : 8/18
DESIGN ENGINEER : VDK DATE : 8/18

DWG. No.

10/11/2019
NORTH CAROLINA PROFESSIONAL SEAL 16301 ENGINEER TIMOTHY H. FANG
DocuSigned by: Timothy H. Fang
60E43C9AEA60462...

REVISIONS						SHEET NO.
NO.	BY:	DATE:	NO.	BY:	DATE:	S-08
1			3			TOTAL SHEETS
2			4			19

STD. NO. 21"PCS_33_90S_50L

FILE: C:\pw_pf\boesch\p\d1130253\401_015_17BP3479_SHU_CS3_008.dgn
DATE: 10/10/2019 11:03:43 AM

DocuSign Envelope ID: C919E33C-6218-4D4E-8ADF-F65E8C49C312

CONCRETE RELEASE STRENGTH

UNIT	PSI
SPAN A (45' UNITS)	4000
SPAN B (50' UNITS)	4900

DEAD LOAD DEFLECTION AND CAMBER

ALL UNITS, 0.6" Ø L.R. STRAND	SPAN A 45' - 21" CS UNIT	SPAN B 50' - 21" CS UNIT
CAMBER (SLAB ALONE IN PLACE)	7/8" ↑	1 1/2" ↑
DEFLECTION DUE TO SUPERIMPOSED DEAD LOAD **	1/8" ↓	3/8" ↓
FINAL CAMBER	3/4" ↑	1 1/8" ↑

** INCLUDES FUTURE WEARING SURFACE

GRADE 270 STRANDS

	0.6" Ø L.R.
AREA (SQUARE INCHES)	0.217
ULTIMATE STRENGTH (LBS. PER STRAND)	58,600
APPLIED PRESTRESS (LBS. PER STRAND)	43,950

CORED SLABS REQUIRED

SPAN A (45' UNITS)

	NUMBER	LENGTH	TOTAL LENGTH
EXTERIOR C.S.	2	45'-0"	90'-0"
INTERIOR C.S.	9	45'-0"	405'-0"
TOTAL			495'-0"

SPAN B (50' UNITS)

	NUMBER	LENGTH	TOTAL LENGTH
EXTERIOR C.S.	2	50'-0"	100'-0"
INTERIOR C.S.	9	50'-0"	450'-0"
TOTAL			550'-0"

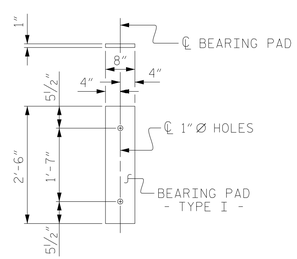

FIXED END
(TYPE I - 44 REQ'D)

ELASTOMERIC BEARING DETAILS

ELASTOMER IN ALL BEARINGS SHALL BE 50 DUROMETER HARDNESS.

BAR TYPES

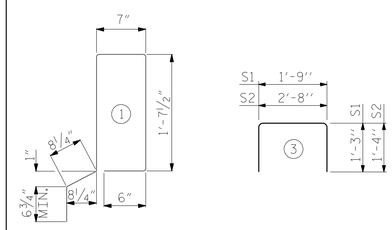

ALL BAR DIMENSIONS ARE OUT TO OUT

BILL OF MATERIAL FOR ONE CORED SLAB UNIT

SPAN A (45' - 21" CORED SLAB UNIT)

				EXTERIOR UNIT		INTERIOR UNIT	
BAR	NUMBER	SIZE	TYPE	LENGTH	WEIGHT	LENGTH	WEIGHT
B5	4	#4	STR	23'-3"	62	23'-3"	62
S1	8	#5	3	4'-3"	35	4'-3"	35
S2	94	#4	3	5'-4"	335	5'-4"	335
* S3	54	#5	1	5'-7"	314		
REINFORCING STEEL			LBS.		432		432
* EPOXY COATED REINFORCING STEEL			LBS.		314		
5000 P.S.I. CONCRETE			CU. YDS.		6.5		6.5
0.6" Ø L.R. STRANDS			No.		13		13

SPAN B (50' - 21" CORED SLAB UNIT)

				EXTERIOR UNIT		INTERIOR UNIT	
BAR	NUMBER	SIZE	TYPE	LENGTH	WEIGHT	LENGTH	WEIGHT
B6	4	#4	STR	25'-9"	69	25'9"	69
S1	8	#5	3	4'-3"	35	4'-3"	35
S2	104	#4	3	5'-4"	371	5'-4"	371
* S3	58	#5	1	5'-7"	338		
REINFORCING STEEL			LBS.		475		475
* EPOXY COATED REINFORCING STEEL			LBS.		338		
6500 P.S.I. CONCRETE			CU. YDS.		7.1		7.1
0.6" Ø L.R. STRANDS			No.		19		19

NOTES

ALL PRESTRESSING STRANDS SHALL BE 7-WIRE LOW RELAXATION GRADE 270 STRANDS AND SHALL CONFORM TO AASHTO M203 EXCEPT FOR SAMPLING REQUIREMENTS WHICH SHALL BE IN ACCORDANCE WITH THE STANDARD SPECIFICATIONS.

ALL REINFORCING STEEL CAST WITH THE CORED SLAB SECTIONS SHALL BE GRADE 60 AND SHALL BE INCLUDED IN THE UNIT PRICE BID FOR PRESTRESSED CONCRETE CORED SLABS.

RECESSES FOR TRANSVERSE STRANDS SHALL BE GROUTED AFTER THE TENSIONING OF THE STRANDS.

THE 2 1/2" Ø DOWEL HOLES AT FIXED ENDS OF SLAB SECTIONS SHALL BE FILLED WITH NON-SHRINK GROUT.

THE BACKER RODS SHALL CONFORM TO THE REQUIREMENTS OF TYPE M BOND BREAKER. SEE SECTION 1028 OF THE STANDARD SPECIFICATIONS.

WHEN CORED SLABS ARE CAST, AN INTERNAL HOLD-DOWN SYSTEM SHALL BE EMPLOYED TO PREVENT VOIDS FROM RISING OR MOVING SIDEWAYS. AT LEAST SIX WEEKS PRIOR TO CASTING CORED SLABS, THE CONTRACTOR SHALL SUBMIT TO THE ENGINEER FOR REVIEW AND COMMENT, DETAILED DRAWINGS OF THE PROPOSED HOLD-DOWN SYSTEM. IN ADDITION TO STRUCTURAL DETAILS, LOCATION AND SPACING OF THE HOLD-DOWNS SHALL BE INDICATED.

ALL REINFORCING STEEL IN THE VERTICAL CONCRETE BARRIER RAIL SHALL BE EPOXY COATED.

PRESTRESSING STRANDS SHALL BE CUT FLUSH WITH THE CORED SLAB UNIT ENDS.

APPLY EPOXY PROTECTIVE COATING TO CORED SLAB UNIT ENDS.

GROOVED CONTRACTION JOINTS, 1/2" IN DEPTH, SHALL BE TOOLED IN ALL EXPOSED FACES OF THE BARRIER RAIL AND IN ACCORDANCE WITH ARTICLE 825-10(B) OF THE STANDARD SPECIFICATIONS. A CONTRACTION JOINT SHALL BE LOCATED AT EACH THIRD POINT BETWEEN BARRIER RAIL EXPANSION JOINTS. ONLY ONE CONTRACTION JOINT IS REQUIRED AT MIDPOINT OF BARRIER RAIL SEGMENTS LESS THAN 20 FEET IN LENGTH AND NO CONTRACTION JOINTS ARE REQUIRED FOR THOSE SEGMENTS LESS THAN 10 FEET IN LENGTH.

FLAME CUTTING OF THE TRANSVERSE POST-TENSIONING STRAND IS NOT ALLOWED.

THE TRANSFER OF LOAD FROM THE ANCHORAGES TO THE CORED SLAB UNIT SHALL BE DONE WHEN THE CONCRETE HAS REACHED A COMPRESSIVE STRENGTH OF NOT LESS THAN THE REQUIRED STRENGTH SHOWN IN THE "CONCRETE RELEASE STRENGTH" TABLE.

FOR GROUT FOR STRUCTURES, SEE SPECIAL PROVISIONS.

THE PERMITTED THREADED INSERTS ARE DETAILED AS AN OPTION FOR THE CONTRACTOR TO ATTACH FALSEWORK AND FORMWORK DURING CONSTRUCTION.

THE PERMITTED THREADED INSERTS IN THE EXTERIOR UNITS SHALL BE SIZED BY THE CONTRACTOR, SPACED AT 4'-0" CENTERS AND GALVANIZED IN ACCORDANCE WITH SECTION 1076 OF THE STANDARD SPECIFICATIONS. STAINLESS STEEL THREADED INSERTS MAY BE USED AS AN ALTERNATE.

THE PERMITTED THREADED INSERTS SHALL BE GROUTED BY THE CONTRACTOR IMMEDIATELY FOLLOWING REMOVAL OF THE FALSEWORK.

THE COST OF THE PERMITTED THREADED INSERTS SHALL BE INCLUDED IN THE PRICE BID FOR THE PRECAST UNITS.

PROJECT NO. B-5308
SAMPSON COUNTY
STATION: 21+64.00 -L-

SHEET 4 OF 5

STATE OF NORTH CAROLINA
DEPARTMENT OF TRANSPORTATION
RALEIGH

3'-0" x 1'-9"
PRESTRESSED CONCRETE
CORED SLAB UNIT
90° SKEW
SPANS A & B

DOCUMENT NOT CONSIDERED FINAL UNLESS ALL SIGNATURES COMPLETED

CDM Smith
CDM SMITH
5400 Glenwood Avenue, Suite 400
Raleigh, NC 27612-3228
NC COA No. F-1255

DRAWN BY : VDK DATE : 8/18
CHECKED BY : THF DATE : 8/18
DESIGN ENGINEER : VDK DATE : 8/18

DWG. No.

10/11/2019
NORTH CAROLINA PROFESSIONAL SEAL 16301 ENGINEER TING HSIUNG FANG
DocuSigned by: Ting H. Fang
60E43C9AEA60462...

REVISIONS						SHEET NO.
NO.	BY:	DATE:	NO.	BY:	DATE:	S-09
1			3			TOTAL SHEETS
2			4			19

STD. NO. 21" BOM INFO_33_90S

FILE: c:\pw_pif\bosch\pif130253\v01_017_178P3R79_SMU_C24_009.dgn
DATE: 10/10/2019 11:03:49 AM

DocuSign Envelope ID: C919E33C-6218-4D4E-8ADF-F65E8C49C312

GUTTERLINE ASPHALT THICKNESS & RAIL HEIGHT		
	ASPHALT OVERLAY THICKNESS @ MID-SPAN	RAIL HEIGHT @ MID-SPAN
SPAN A (45' UNITS)	2"	3'-8"
SPAN B (50' UNITS)	1⅝"	3'-7⅝"

BILL OF MATERIAL FOR VERTICAL CONCRETE BARRIER RAIL

BAR	BARS PER PAIR OF EXTERIOR UNITS	TOTAL NO.	SIZE	TYPE	LENGTH	WEIGHT
	SPAN A (45' UNIT)					
✳B12	40	40	#5	STR	22'-1"	921
✳ S4	108	108	#5	2	7'-2"	807
✳EPOXY COATED REINFORCING STEEL				LBS.		1728
CLASS AA CONCRETE				CU.YDS.		11.5
TOTAL VERTICAL CONCRETE BARRIER RAIL				LN. FT.		90.125
	SPAN B (50' UNIT)					
✳B13	40	40	#5	STR	24'-7"	1026
✳ S4	116	116	#5	2	7'-2"	867
✳EPOXY COATED REINFORCING STEEL				LBS.		1893
CLASS AA CONCRETE				CU.YDS.		12.8
TOTAL VERTICAL CONCRETE BARRIER RAIL				LN. FT.		100.125

TOTAL VERTICAL CONCRETE BARRIER RAIL FOR ENTIRE BRIDGE: 190.25 LN.FT.

TOTAL LENGTH OF FIBER OPTIC CONDUIT SYSTEM FOR ENTIRE BRIDGE: 186.25 LN.FT.

NOTE: FOR FIBER OPTIC CONDUIT SYSTEM, SEE SPECIAL PROVISIONS.

BAR TYPE

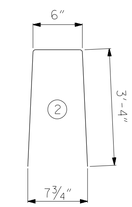

ALL BAR DIMENSIONS ARE OUT TO OUT

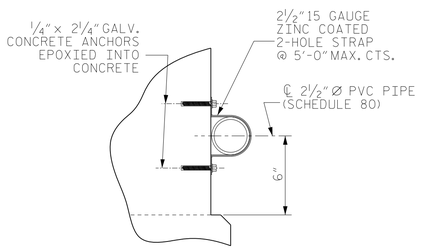

SECTION A-A

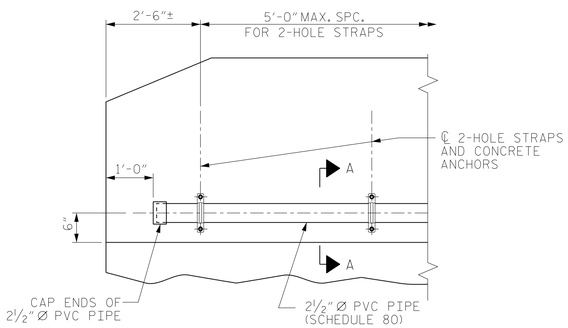

ELEVATION

FIBER OPTIC CONDUIT SYSTEM DETAILS

2½" Ø SCHEDULE 80 PVC PIPE ATTACHED TO THE BACK OF BOTH RAILS FOR FUTURE FIBER OPTIC CABLE.

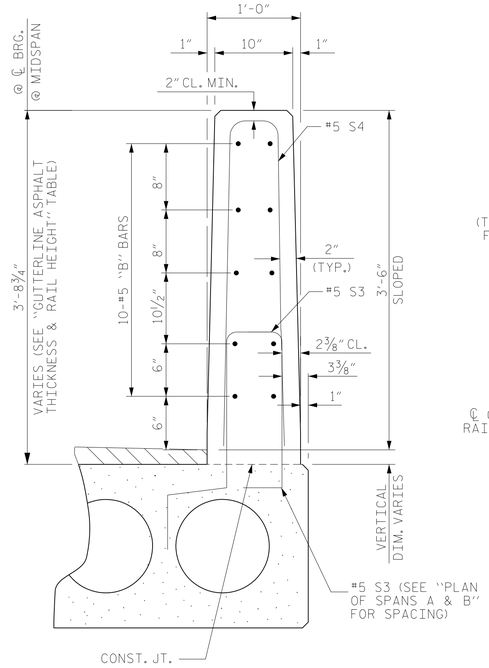

VERTICAL CONCRETE BARRIER RAIL SECTION

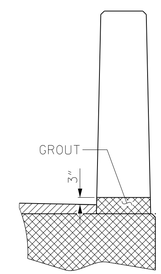

SECTION T-T

AT OPEN JOINT AT BENT (THIS IS TO BE USED WHERE FOAM JOINT IS NOT USED)

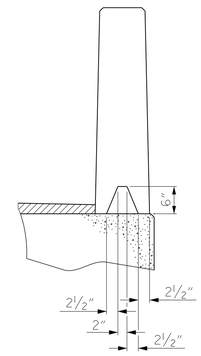

SECTION S-S

AT DAM IN OPEN JOINT (THIS IS TO BE USED ONLY WHEN SLIP FORM IS USED)

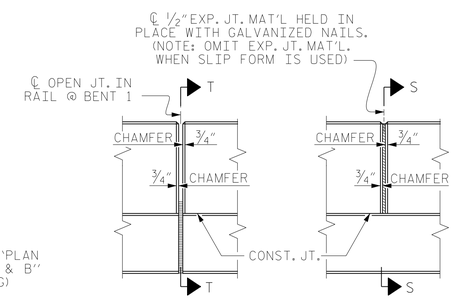

ELEVATION AT EXPANSION JOINTS

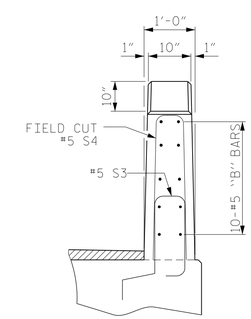

END VIEW

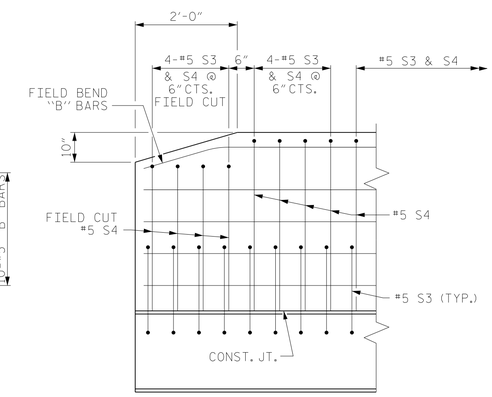

SIDE VIEW

END OF RAIL DETAILS

PROJECT NO. B-5308

SAMPSON COUNTY

STATION: 21+64.00 -L-

SHEET 5 OF 5

DOCUMENT NOT CONSIDERED FINAL UNLESS ALL SIGNATURES COMPLETED

CDM Smith

CDM SMITH
5400 Glenwood Avenue, Suite 400
Raleigh, NC 27612-3228
NC COA No. F-1255

DRAWN BY : VDK DATE : 8/18
CHECKED BY : THF DATE : 8/18
DESIGN ENGINEER : VDK DATE : 8/18

DWG. No.

10/11/2019

NORTH CAROLINA PROFESSIONAL SEAL 16301 ENGINEER TING-HSIUNG FANG

DocuSigned by: Ting H. Fang
60E43C9AEA60462...

STATE OF NORTH CAROLINA
DEPARTMENT OF TRANSPORTATION
RALEIGH

VERTICAL CONCRETE BARRIER RAIL DETAILS

REVISIONS						SHEET NO.
NO.	BY:	DATE:	NO.	BY:	DATE:	S-10
1			3			TOTAL SHEETS
2			4			19

FILE: c:\pw_pll\beachip\d1302531\401_019_178PS879_SMU_CS5_010.dgn
DATE: 10/10/2019 11:03:56 AM

DocuSign Envelope ID: C919E33C-6218-4D4E-8ADF-F65E8C49C312

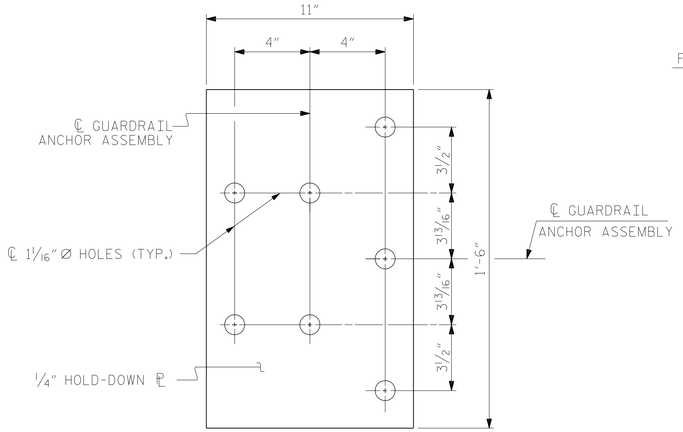

PLAN

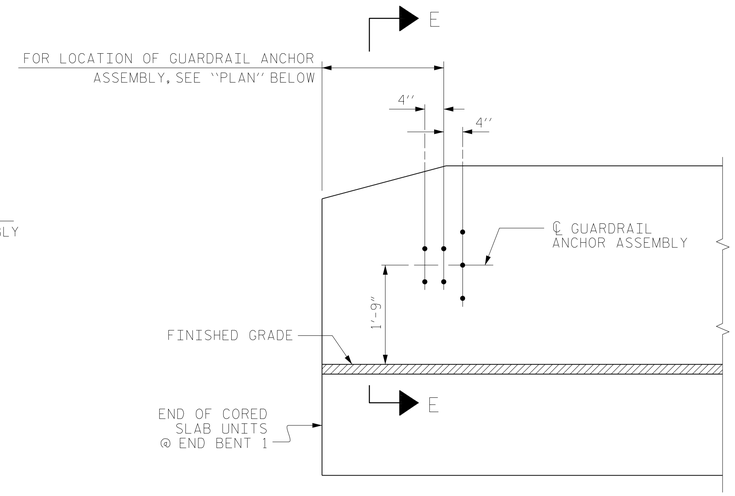

ELEVATION

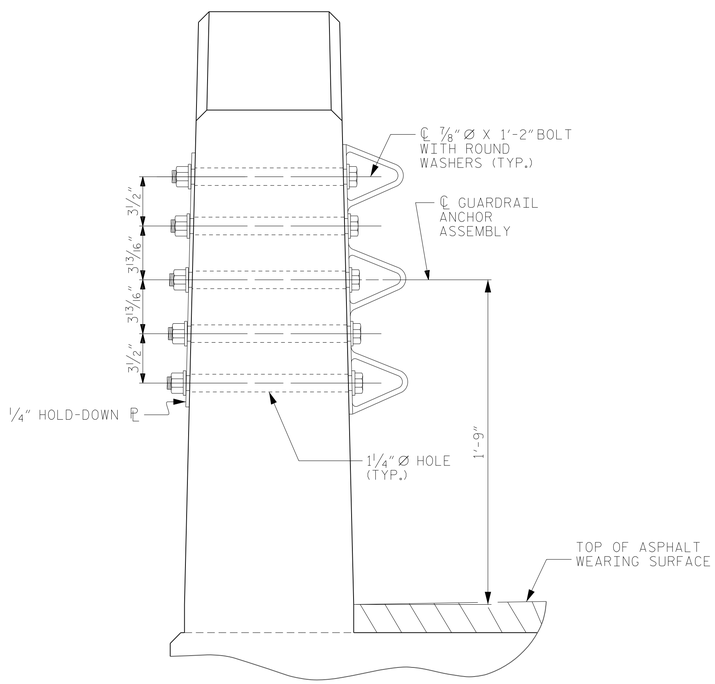

SECTION E-E

GUARDRAIL ANCHOR ASSEMBLY DETAILS

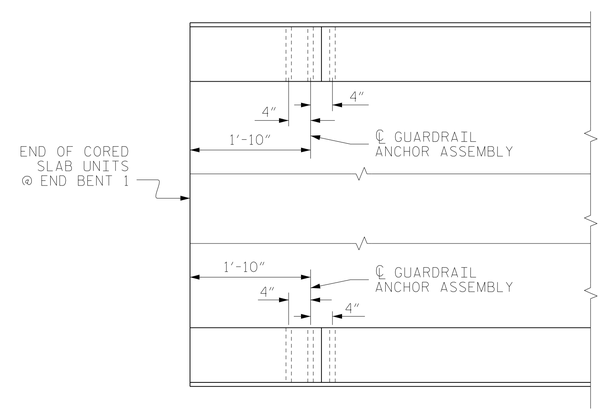

PLAN

LOCATION OF ANCHORS FOR GUARDRAIL

END BENT 1 SHOWN, END BENT 2 SIMILAR.

NOTES

THE GUARDRAIL ANCHOR ASSEMBLY SHALL CONSIST OF A 1/4" HOLD DOWN PLATE AND 7 - 7/8" Ø BOLTS WITH NUTS AND WASHERS.

THE HOLD-DOWN PLATE SHALL CONFORM TO AASHTO M270 GRADE 36. AFTER FABRICATION, THE HOLD-DOWN PLATE SHALL BE HOT-DIP GALVANIZED IN ACCORDANCE WITH AASHTO M111.

BOLTS SHALL CONFORM TO THE REQUIREMENTS OF ASTM A307 AND NUTS SHALL CONFORM TO THE REQUIREMENTS OF AASHTO M291. BOLTS, NUTS AND WASHERS SHALL BE GALVANIZED. (AT THE CONTRACTOR'S OPTION, STAINLESS STEEL BOLTS, NUTS AND WASHERS MAY BE USED AS AN ALTERNATE FOR THE 7/8" Ø GALVANIZED BOLTS, NUTS AND WASHERS. THEY SHALL CONFORM TO OR EXCEED THE MECHANICAL REQUIREMENTS OF ASTM A307. THE USE OF THIS ALTERNATE SHALL BE APPROVED BY THE ENGINEER.)

THE GUARDRAIL ANCHOR ASSEMBLY IS REQUIRED AT ALL POINTS WHERE APPROACH GUARDRAIL IS TO BE ATTACHED TO THE END OF BARRIER RAIL. FOR POINTS OF ATTACHMENT, SEE SKETCH.

AFTER INSTALLATION, THE EXPOSED THREAD OF THE BOLT SHALL BE BURRED WITH A SHARP POINTED TOOL.

THE COST OF THE GUARDRAIL ANCHOR ASSEMBLY SHALL BE INCLUDED IN THE UNIT CONTRACT PRICE BID FOR VERTICAL CONCRETE BARRIER RAIL.

THE VERTICAL REINFORCING BARS MAY BE SHIFTED SLIGHTLY IN THE VERTICAL CONCRETE BARRIER RAIL TO CLEAR ASSEMBLY BOLTS.

THE 1 1/4" Ø HOLES SHALL BE FORMED OR DRILLED WITH A CORE BIT. IMPACT TOOLS WILL NOT BE PERMITTED. ANY CONCRETE DAMAGED BY THIS WORK SHALL BE REPAIRED TO THE SATISFACTION OF THE ENGINEER.

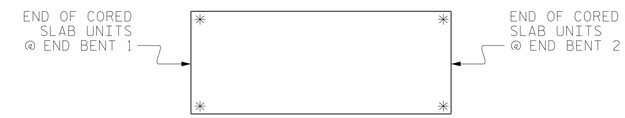

SKETCH SHOWING POINTS OF ATTACHMENT

* DENOTES GUARDRAIL ANCHOR ASSEMBLY

PROJECT NO. B-5308
SAMPSON COUNTY
STATION: 21+64.00 -L-

DOCUMENT NOT CONSIDERED FINAL UNLESS ALL SIGNATURES COMPLETED

CDM Smith
CDM SMITH
5400 Glenwood Avenue, Suite 400
Raleigh, NC 27612-3228
NC COA No. F-1255

DRAWN BY : VDK DATE : 8/18
CHECKED BY : THF DATE : 8/18
DESIGN ENGINEER : VDK DATE : 8/18

DWG. No.

10/11/2019
NORTH CAROLINA PROFESSIONAL SEAL 16301 ENGINEER TING-HSIUNG FANG
DocuSigned by: Ting H. Fang
60E43C9AEA60462...

STATE OF NORTH CAROLINA
DEPARTMENT OF TRANSPORTATION
RALEIGH
SUPERSTRUCTURE

STANDARD GUARDRAIL ANCHORAGE FOR VERTICAL CONCRETE BARRIER RAIL

REVISIONS						SHEET NO.
NO.	BY:	DATE:	NO.	BY:	DATE:	S-11
1			3			TOTAL SHEETS
2			4			19

FILE: c:\pw_pdl\boeschja\d1302531\401_021_178P3879_SMU_GR_011.dgn
DATE: 10/10/2019 11:04:50 AM

STD. NO. GRA3

DocuSign Envelope ID: C919E33C-6218-4D4E-8ADF-F65E8C49C312

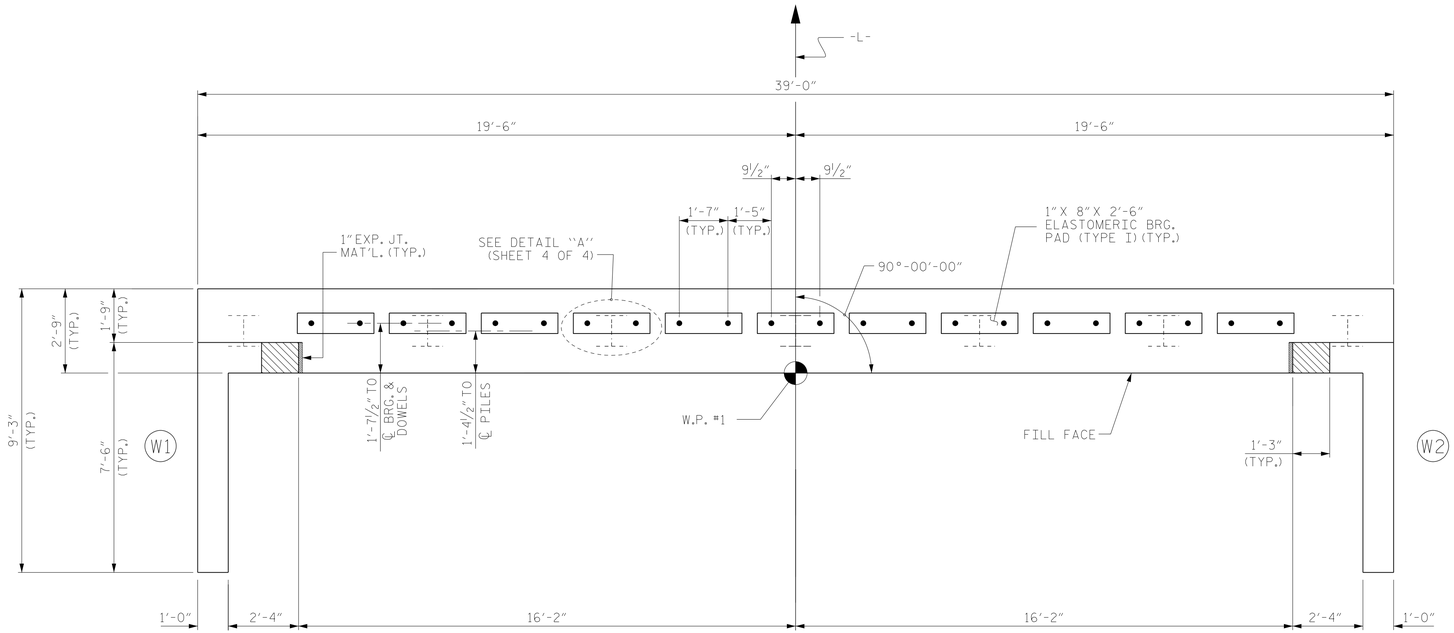

PLAN

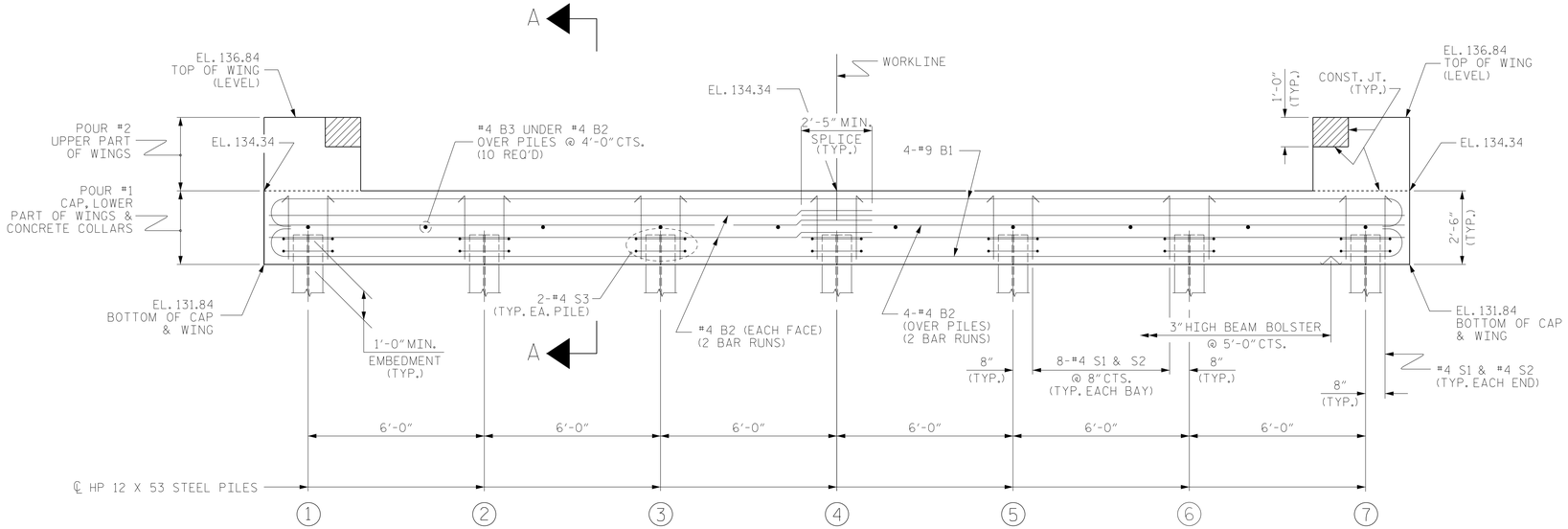

ELEVATION

WINGS NOT SHOWN FOR CLARITY.
FOR SECTION A-A, SEE SHEET 4 OF 4.
CONCRETE COLLARS FOR STEEL PILES NOT SHOWN IN PLAN AND ELEVATION VIEWS FOR CLARITY.
SEE "CORROSION PROTECTION FOR STEEL PILES DETAIL", SHEET 4 OF 4.

NOTES

STIRRUPS IN CAP MAY BE SHIFTED AS NECESSARY TO CLEAR DOWELS.

THE CONCRETE IN THE SHADED AREA OF THE WING SHALL BE POURED AFTER THE VERTICAL CONCRETE BARRIER RAIL IS CAST IF SLIP FORMING IS USED.

FOR PILE SPLICE DETAILS, SEE SHEET 4 OF 4.

FOR WING DETAILS, SEE SHEET 3 OF 4.

PROJECT NO. B-5308
SAMPSON COUNTY
STATION: 21+64.00 -L-

SHEET 1 OF 4

STATE OF NORTH CAROLINA
DEPARTMENT OF TRANSPORTATION
RALEIGH

SUBSTRUCTURE

END BENT 1

DOCUMENT NOT CONSIDERED FINAL UNLESS ALL SIGNATURES COMPLETED

CDM Smith
CDM SMITH
5400 Glenwood Avenue, Suite 400
Raleigh, NC 27612-3228
NC COA No. F-1255

DRAWN BY : VDK DATE : 8/18
CHECKED BY : THF DATE : 8/18
DESIGN ENGINEER : VDK DATE : 8/18

DWG. No.

NORTH CAROLINA PROFESSIONAL SEAL 16301 ENGINEER TING HSIUNG FANG
10/11/2019
DocuSigned by: Ting H. Fang
80E43C9AEA60462...

REVISIONS						SHEET NO.
NO.	BY:	DATE:	NO.	BY:	DATE:	S-12
1			3			TOTAL SHEETS
2			4			19

STD. NO. EB_33_90S

FILE: c:\pw_pll\boesche\d1302253\d01_023_17BP3879_SMU_E1_012.dgn
DATE: 10/10/2019 11:04:56 AM

DocuSign Envelope ID: C919E33C-6218-4D4E-8ADF-F65E8C49C312

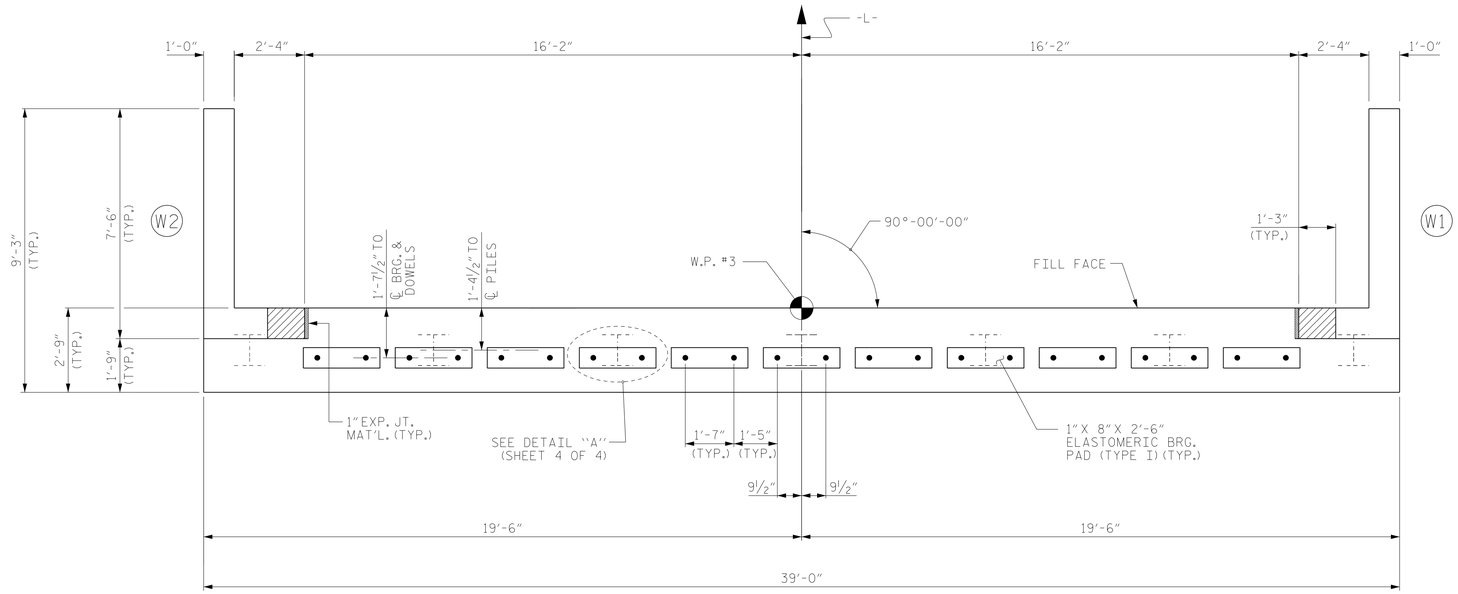

PLAN

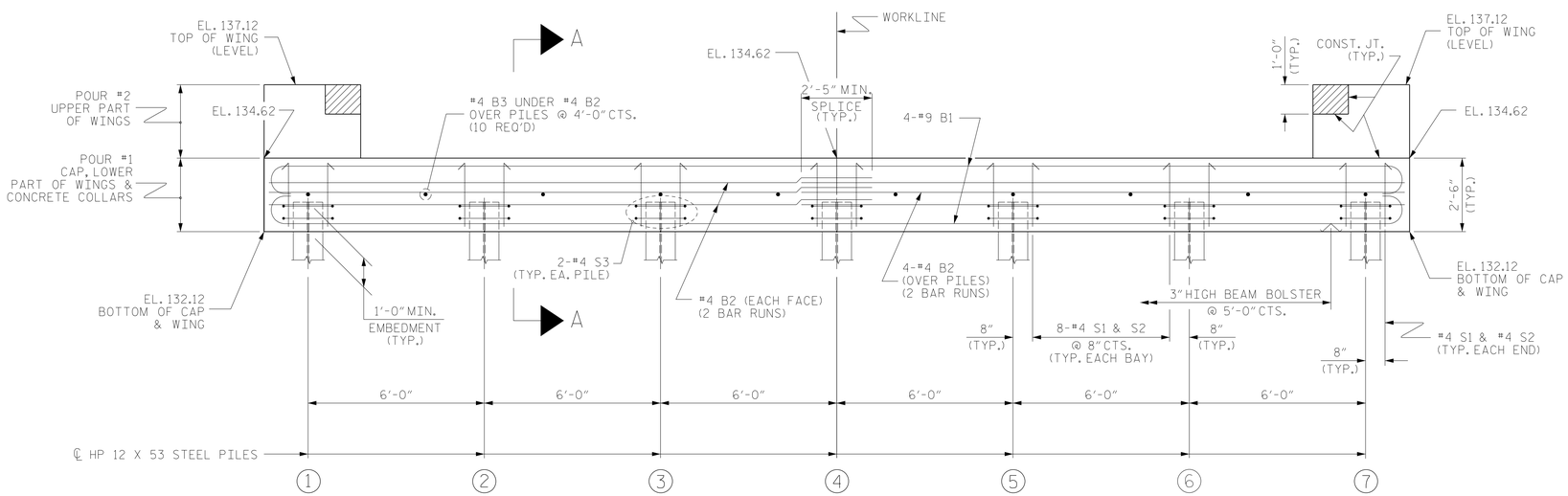

ELEVATION

WINGS NOT SHOWN FOR CLARITY.
FOR SECTION A-A, SEE SHEET 4 OF 4.
CONCRETE COLLARS FOR STEEL PILES NOT SHOWN IN PLAN AND ELEVATION VIEWS FOR CLARITY.
SEE "CORROSION PROTECTION FOR STEEL PILES DETAIL", SHEET 4 OF 4.

NOTES

STIRRUPS IN CAP MAY BE SHIFTED AS NECESSARY TO CLEAR DOWELS.

THE CONCRETE IN THE SHADED AREA OF THE WING SHALL BE POURED AFTER THE VERTICAL CONCRETE BARRIER RAIL IS CAST IF SLIP FORMING IS USED.

FOR PILE SPLICE DETAILS, SEE SHEET 4 OF 4.

FOR WING DETAILS, SEE SHEET 3 OF 4.

PROJECT NO. B-5308
SAMPSON COUNTY
STATION: 21+64.00 -L-

SHEET 2 OF 4

STATE OF NORTH CAROLINA
DEPARTMENT OF TRANSPORTATION
RALEIGH

SUBSTRUCTURE

END BENT 2

DOCUMENT NOT CONSIDERED FINAL UNLESS ALL SIGNATURES COMPLETED

CDM Smith
CDM SMITH
5400 Glenwood Avenue, Suite 400
Raleigh, NC 27612-3228
NC COA No. F-1255

DRAWN BY : VDK DATE : 8/18
CHECKED BY : THF DATE : 8/18
DESIGN ENGINEER : VDK DATE : 8/18

DWG. No.

10/11/2019
NORTH CAROLINA PROFESSIONAL SEAL 16301 ENGINEER TING HSIUNG FANG
DocuSigned by: Ting H. Fang
60E43C9AEA60462...

REVISIONS						SHEET NO.
NO.	BY:	DATE:	NO.	BY:	DATE:	S-13
1			3			TOTAL SHEETS
2			4			19

STD. NO. EB_33_90S

FILE: c:\pw_pif\boesch\pif130253\401_025_17BP3R79_SMU_E2_013.dgn
DATE: 10/10/2019 11:05:04 AM

DocuSign Envelope ID: C919E33C-6218-4D4E-8ADF-F65E8C49C312

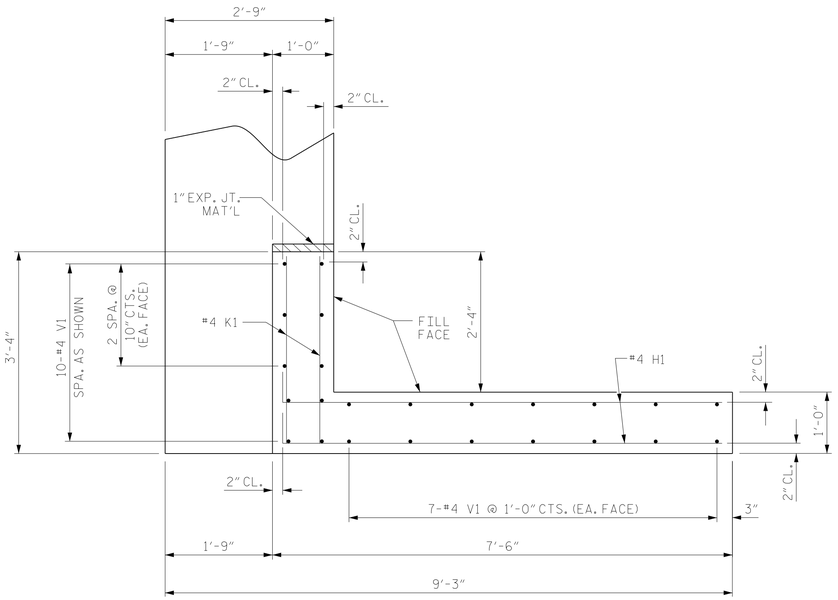

PLAN OF WING (W1)

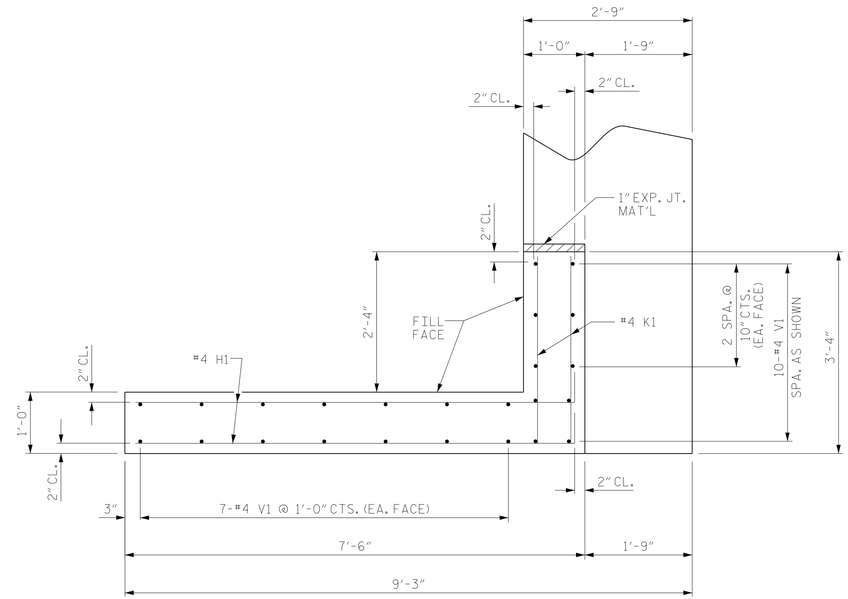

PLAN OF WING (W2)

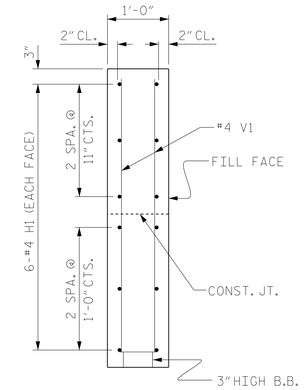

SECTION X-X

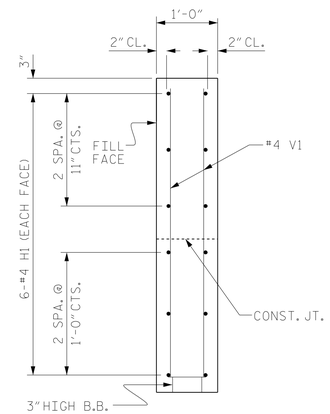

SECTION Y-Y

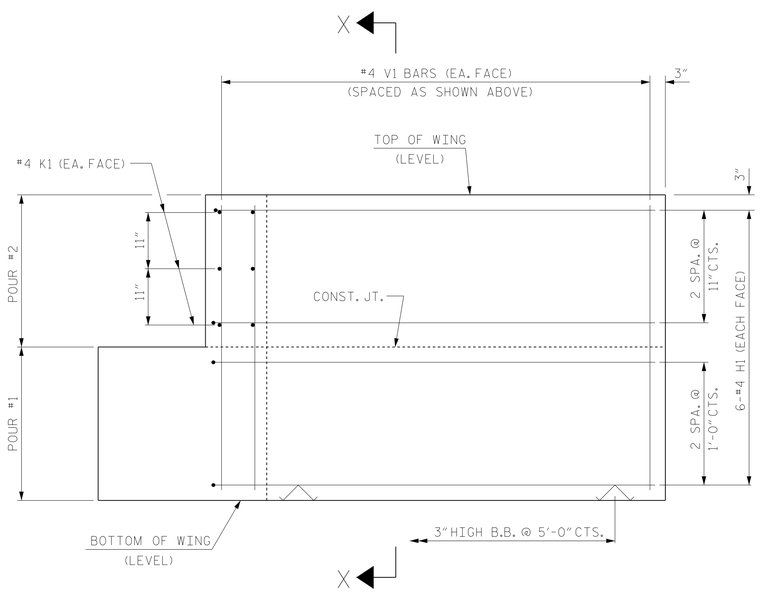

ELEVATION OF WING (W1)

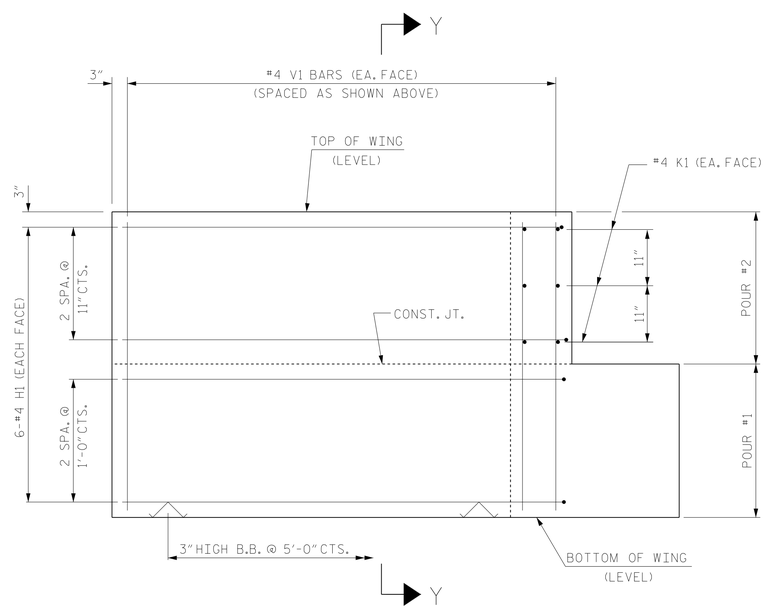

ELEVATION OF WING (W2)

WING DETAILS

PROJECT NO. B-5308

SAMPSON COUNTY

STATION: 21+64.00 -L-

SHEET 3 OF 4

STATE OF NORTH CAROLINA
DEPARTMENT OF TRANSPORTATION
RALEIGH

SUBSTRUCTURE

END BENTS 1 & 2
WING DETAILS

DOCUMENT NOT CONSIDERED FINAL UNLESS ALL SIGNATURES COMPLETED

CDM Smith
CDM SMITH
5400 Glenwood Avenue, Suite 400
Raleigh, NC 27612-3228
NC COA No. F-1255

DRAWN BY : VDK DATE : 8/18
CHECKED BY : THF DATE : 8/18
DESIGN ENGINEER : VDK DATE : 8/18

DWG. No.

10/11/2019
NORTH CAROLINA PROFESSIONAL SEAL 16301 ENGINEER TING H. FANG
DocuSigned by: Ting H. Fang
B0E43C0BAEA80462...

REVISIONS						SHEET NO.
NO.	BY:	DATE:	NO.	BY:	DATE:	S-14
1			3			TOTAL SHEETS
2			4			19

FILE: c:\pw_pif\bosch\p df130253\401_027_17BP3879_SAU_E3_014.dgn
DATE: 10/10/2019 11:05:14 AM

STD. NO. EB_33_90S

DocuSign Envelope ID: C919E33C-6218-4D4E-8ADF-F65E8C49C312

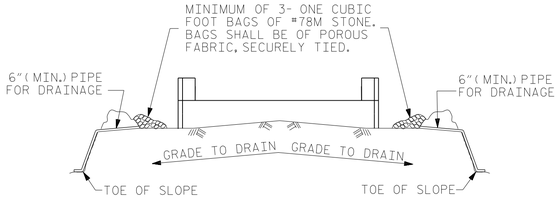

BAGGED STONE AND PIPE SHALL BE PLACED IMMEDIATELY AFTER COMPLETION OF END BENT EXCAVATION. PIPE MAY BE EITHER CONCRETE, CORRUGATED STEEL, CORRUGATED ALUMINUM ALLOY, OR CORRUGATED PLASTIC. PERFORATED PIPE WILL NOT BE ALLOWED.

BAGGED STONE SHALL REMAIN IN PLACE UNTIL THE ENGINEER DIRECTS THAT IT BE REMOVED. THE CONTRACTOR SHALL REMOVE AND DISPOSE OF SILT ACCUMULATIONS AT BAGGED STONE WHEN SO DIRECTED BY THE ENGINEER. BAGS SHALL BE REMOVED AND REPLACED WHENEVER THE ENGINEER DETERMINES THAT THEY HAVE DETERIORATED AND LOST THEIR EFFECTIVENESS.

NO SEPARATE PAYMENT WILL BE MADE FOR THIS WORK AND THE ENTIRE COST OF THIS WORK SHALL BE INCLUDED IN THE UNIT CONTRACT PRICE BID FOR THE SEVERAL PAY ITEMS.

TEMPORARY DRAINAGE AT END BENT

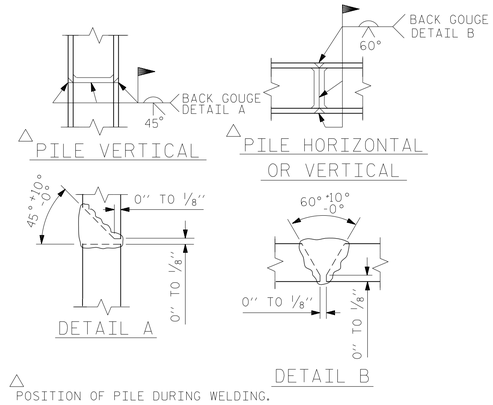

PILE SPLICE DETAILS

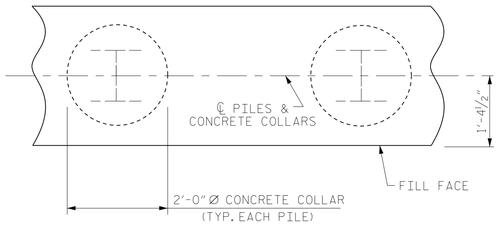

PLAN

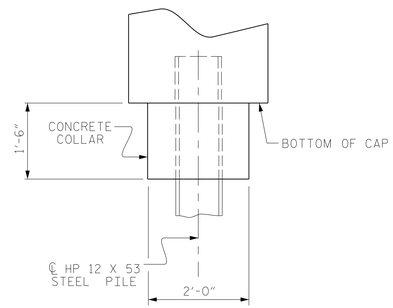

ELEVATION

CORROSION PROTECTION FOR STEEL PILES DETAIL

(END BENT 1 SHOWN, END BENT 2 SIMILAR BY ROTATION)

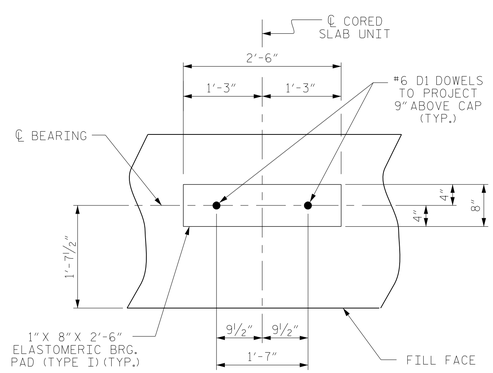

DETAIL "A"

(END BENT 1 SHOWN, END BENT 2 SIMILAR BY ROTATION)

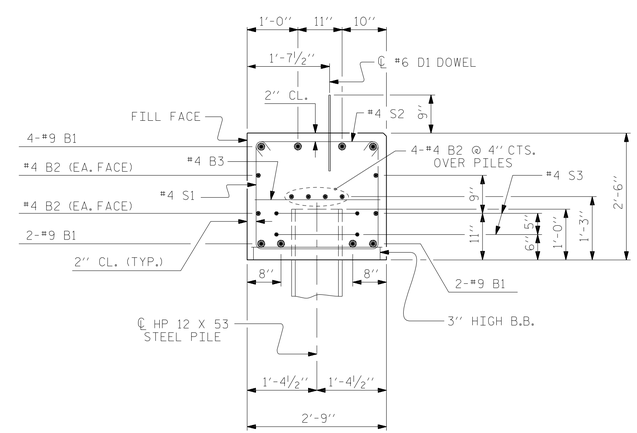

SECTION A-A

(CONCRETE COLLAR NOT SHOWN FOR CLARITY. SEE "CORROSION PROTECTION FOR STEEL PILES DETAIL.")

BAR TYPES

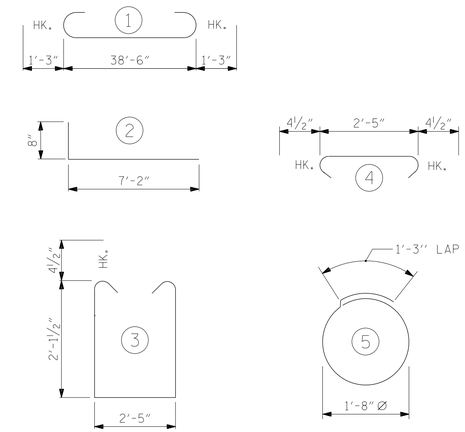

ALL BAR DIMENSIONS ARE OUT TO OUT.

END BENT 1		END BENT 2	
HP 12 X 53 STEEL PILES		HP 12 X 53 STEEL PILES	
NO: 7	LIN. FT.= 385	NO: 7	LIN. FT.= 385
PILE DRIVING EQUIP. SETUP	EA. 7	PILE DRIVING EQUIP. SETUP	EA. 7
PILE REDRIVES	EA. 4	PILE REDRIVES	EA. 4

BILL OF MATERIAL

FOR ONE END BENT

(2 REQUIRED)

BAR	NO.	SIZE	TYPE	LENGTH	WEIGHT
B1	8	#9	1	41'-0"	1115
B2	16	#4	STR	20'-7"	220
B3	10	#4	STR	2'-5"	16
D1	22	#6	STR	1'-6"	50
H1	24	#4	2	7'-10"	126
K1	12	#4	STR	2'-11"	23
S1	50	#4	3	7'-5"	248
S2	50	#4	4	3'-2"	106
S3	14	#4	5	6'-6"	61
V1	48	#4	STR	4'-8"	150

REINFORCING STEEL 2115 LBS.

CLASS A CONCRETE BREAKDOWN:

POUR #1	CAP, LOWER PART OF WINGS & COLLARS	12.4 C.Y.
POUR #2	UPPER PART OF WINGS	1.8 C.Y.
	TOTAL	14.2 C.Y.

PROJECT NO. B-5308
SAMPSON COUNTY
STATION: 21+64.00 -L-

SHEET 4 OF 4

STATE OF NORTH CAROLINA
DEPARTMENT OF TRANSPORTATION
RALEIGH

SUBSTRUCTURE

END BENTS 1 & 2 DETAILS

DOCUMENT NOT CONSIDERED FINAL UNLESS ALL SIGNATURES COMPLETED

CDM Smith
CDM SMITH
5400 Glenwood Avenue, Suite 400
Raleigh, NC 27612-3228
NC COA No. F-1255

DRAWN BY : VDK DATE : 8/18
CHECKED BY : THF DATE : 8/18
DESIGN ENGINEER : VDK DATE : 8/18

DWG. No.

10/11/2019
NORTH CAROLINA PROFESSIONAL SEAL 16301 ENGINEER TING HSUNG FANG
DocuSigned by: Ting H. Fang
B0E43C8AEA80462...

REVISIONS						SHEET NO.
NO.	BY:	DATE:	NO.	BY:	DATE:	S-15
1			3			TOTAL SHEETS
2			4			19

STD. NO. EB_33_90S

FILE: c:\pw_pll\bosschjo\dl130253\401_029_17BP3KP9_SMU_E4_015.dgn
DATE: 10/10/2019 11:05:26 AM

DocuSign Envelope ID: C919E33C-6218-4D4E-8ADF-F65E8C49C312

NOTES

STIRRUPS IN CAP MAY BE SHIFTED AS NECESSARY TO CLEAR DOWELS.

★ INVERT ALTERNATE STIRRUPS.

GALVANIZE THE TOP OF EACH INTERIOR BENT PILE A MINIMUM OF 27 FEET. GALVANIZE IN ACCORDANCE WITH SECTION 1076 OF THE STANDARD SPECIFICATIONS.

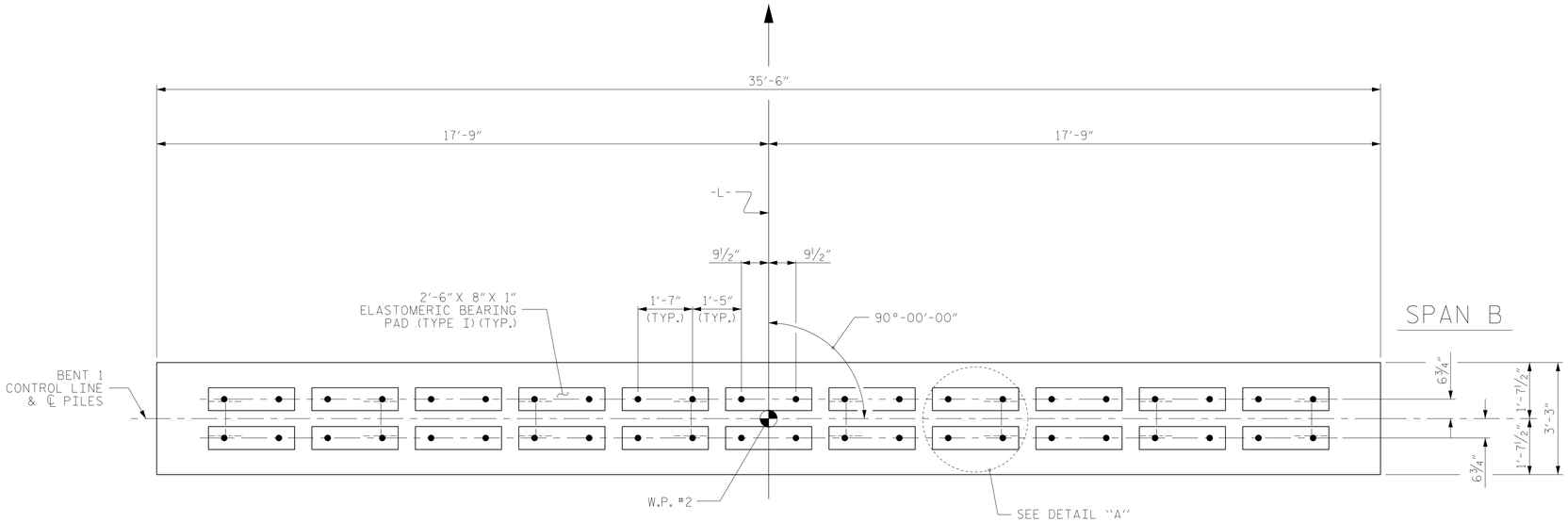

PLAN

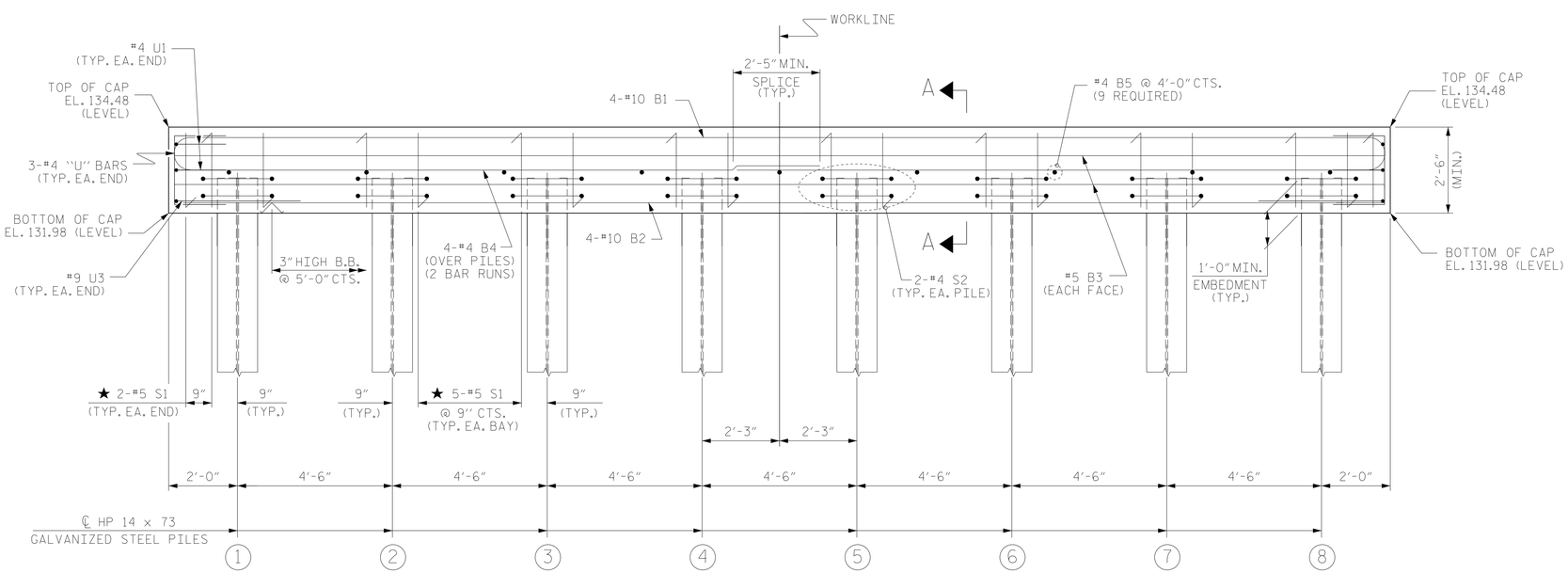

ELEVATION

FOR SECTION A-A, SEE SHEET 2 OF 2

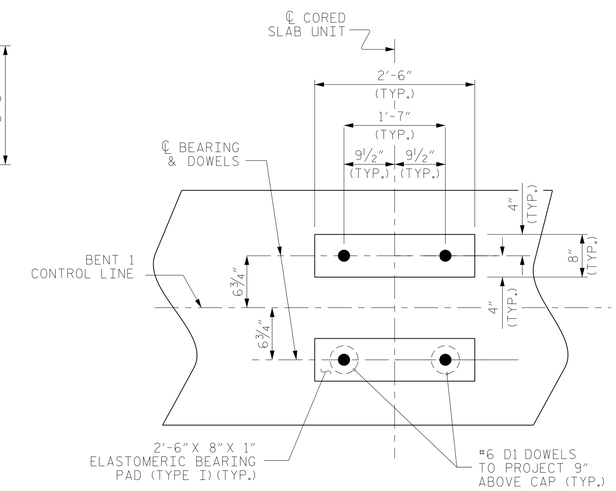

DETAIL "A"

(DIMENSIONS ARE TYPICAL EACH BEARING)

PROJECT NO. B-5308

SAMPSON COUNTY

STATION: 21+64.00 -L-

SHEET 1 OF 2

STATE OF NORTH CAROLINA
DEPARTMENT OF TRANSPORTATION
RALEIGH

SUBSTRUCTURE

BENT 1

DOCUMENT NOT CONSIDERED FINAL UNLESS ALL SIGNATURES COMPLETED

CDM Smith

CDM SMITH
5400 Glenwood Avenue, Suite 400
Raleigh, NC 27612-3228
NC COA No. F-1255

DRAWN BY : VDK DATE : 8/18
CHECKED BY : THF DATE : 8/18
DESIGN ENGINEER : VDK DATE : 8/18

DWG. No.

10/11/2019

NORTH CAROLINA PROFESSIONAL SEAL 16301 ENGINEER TING HSIUNG FAING

DocuSigned by: Ting H. Faing
60E43C9AEA60462...

REVISIONS						SHEET NO.
NO.	BY:	DATE:	NO.	BY:	DATE:	S-16
1			3			TOTAL SHEETS
2			4			19

FILE: c:\pw_pll\bosche\d1130253\d01_031_17BP3879_SMU_B1_016.dgn
DATE: 10/10/2019 11:06:06 AM

DocuSign Envelope ID: C919E33C-6218-4D4E-8ADF-F65E8C49C312

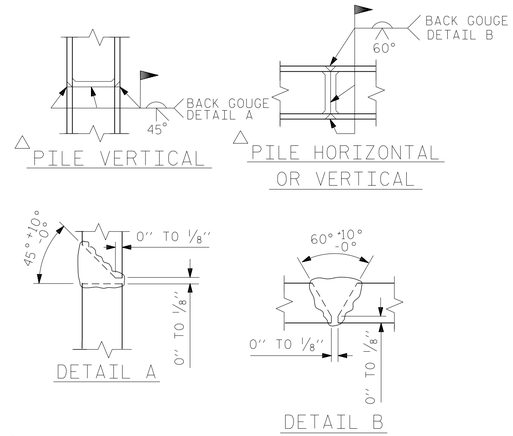

△ POSITION OF PILE DURING WELDING.

PILE SPLICE DETAILS

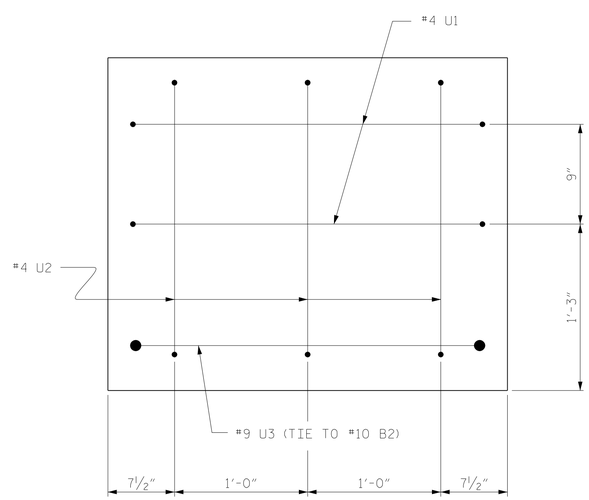

END OF CAP VIEW

(TYPICAL BOTH ENDS)

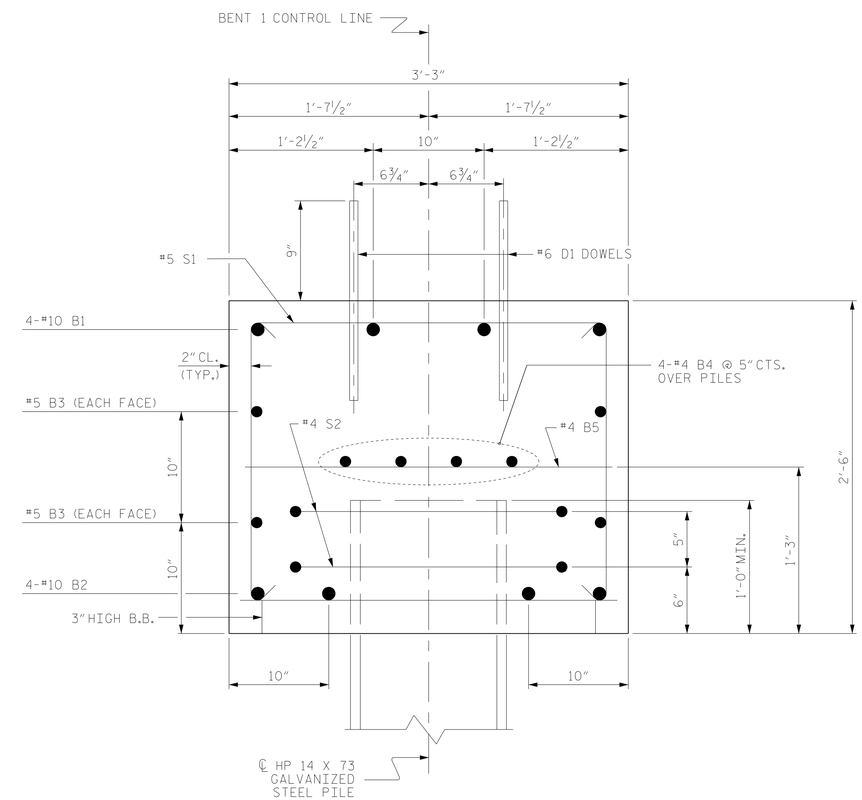

SECTION A-A

BAR TYPES

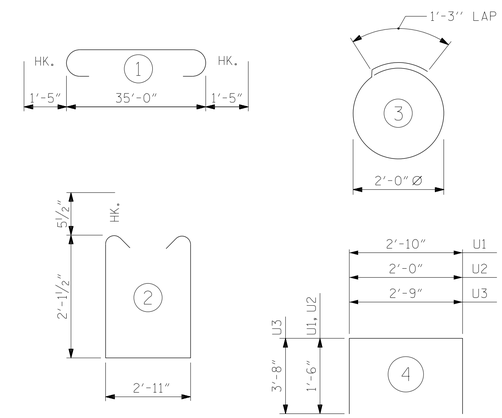

ALL BAR DIMENSIONS ARE OUT TO OUT.

BILL OF MATERIAL

BENT 1

BAR	NO.	SIZE	TYPE	LENGTH	WEIGHT
B1	4	#10	1	37'-10"	651
B2	4	#10	STR	35'-2"	605
B3	4	#5	STR	35'-2"	147
B4	8	#4	STR	18'-10"	101
B5	9	#4	STR	2'-11"	18
D1	44	#6	STR	1'-6"	99
S1	39	#5	2	8'-1"	329
S2	16	#4	3	7'-7"	81
U1	4	#4	4	5'-10"	16
U2	6	#4	4	5'-0"	20
U3	2	#9	4	10'-1"	69

REINFORCING STEEL	2136 LBS
TOTAL CLASS A CONCRETE	10.7 C.Y.

HP 14 X 73 GALVANIZED STEEL PILES	
No. 8	LIN. FT. 520
PILE DRIVING EQUIPMENT SETUP	EA. 8
PILE REDRIVES	EA. 4

PROJECT NO. B-5308

SAMPSON COUNTY

STATION: 21+64.00 -L-

SHEET 2 OF 2

STATE OF NORTH CAROLINA
DEPARTMENT OF TRANSPORTATION
RALEIGH

SUBSTRUCTURE

BENT 1

DOCUMENT NOT CONSIDERED FINAL UNLESS ALL SIGNATURES COMPLETED

CDM Smith

CDM SMITH
5400 Glenwood Avenue, Suite 400
Raleigh, NC 27612-3228
NC COA No. F-1255

DRAWN BY : VDK DATE : 8/18
CHECKED BY : THF DATE : 8/18
DESIGN ENGINEER : VDK DATE : 8/18

DWG. No.

10/11/2019
NORTH CAROLINA PROFESSIONAL SEAL 16301 ENGINEER TING-HSIUNG FANG
DocuSigned by: Ting H. Fang
62E43C9AEA60462...

REVISIONS							SHEET NO.
NO.	BY:	DATE:	NO.	BY:	DATE:		S-17
1			3				TOTAL SHEETS
2			4				19

FILE: c:\pw_pll\boeschjo\dh30253\401_033_17BR3679_SMU_B1_017.dgn
DATE: 10/10/2019 11:06:13 AM

DocuSign Envelope ID: C919E33C-6218-4D4E-8ADF-F65E8C49C312

ESTIMATED QUANTITIES		
BRIDGE @ STA. 21+64.00 -L-	RIP RAP CLASS II	GEOTEXTILE FOR DRAINAGE
	TONS	SQUARE YARDS
END BENT 1	100	110
END BENT 2	90	100
TOTAL	190	210

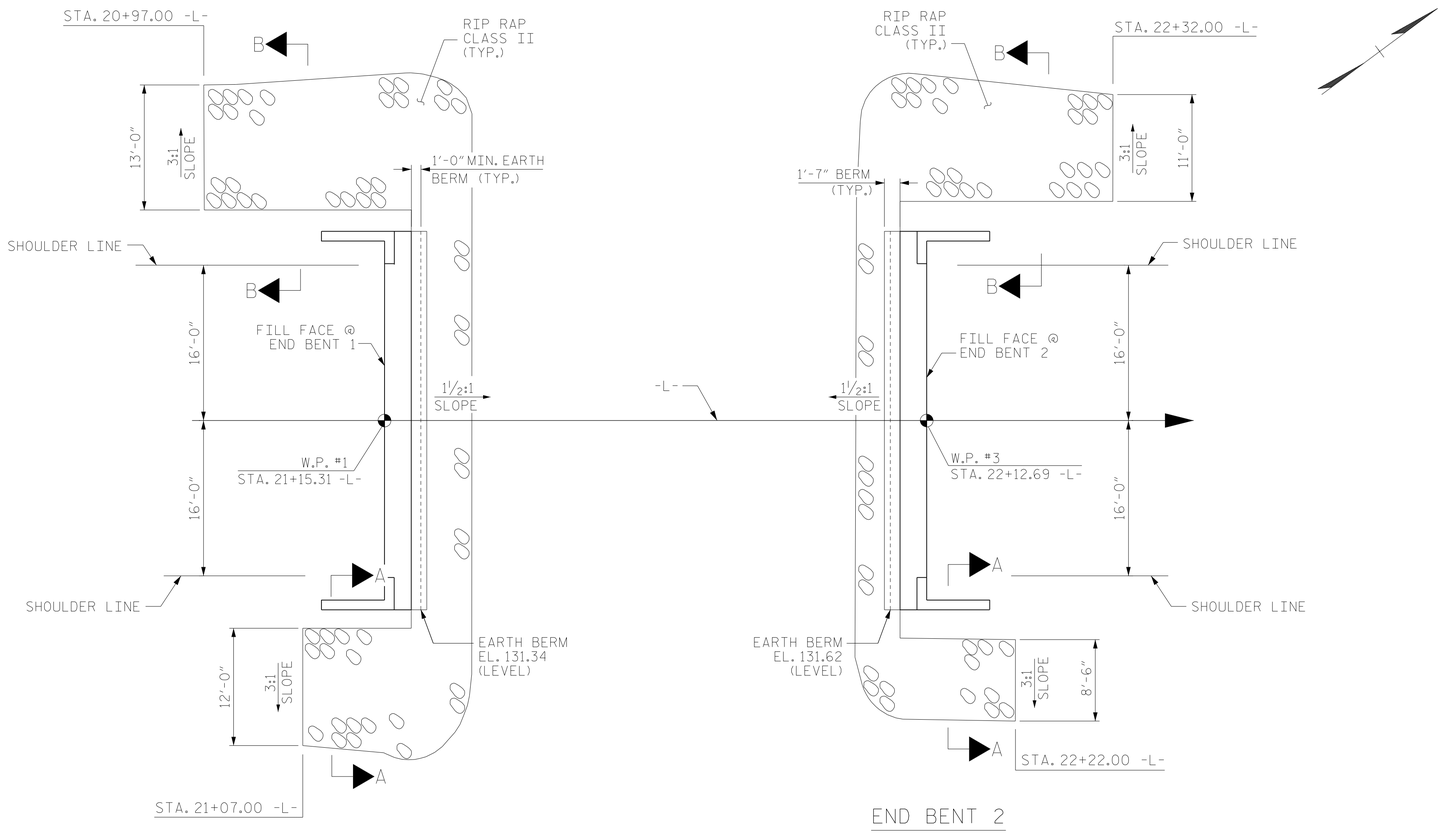

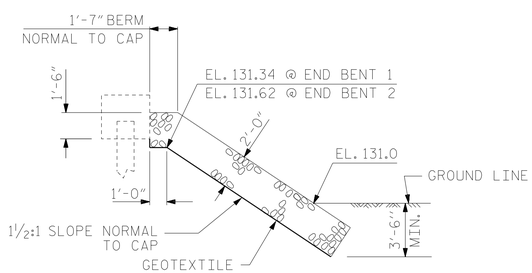

℄ SECTION

BERM RIP RAPPED

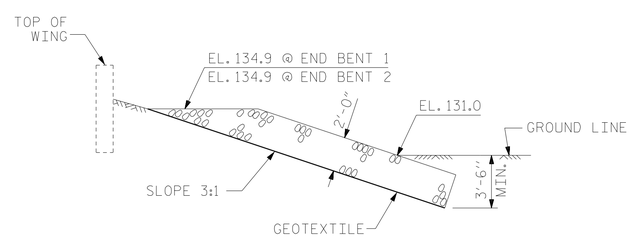

SECTION A-A

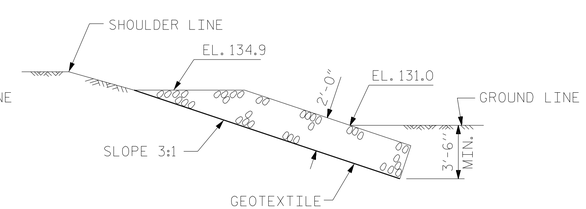

SECTION B-B

PROJECT NO. B-5308
SAMPSON COUNTY
STATION: 21+64.00 -L-

STATE OF NORTH CAROLINA
DEPARTMENT OF TRANSPORTATION
RALEIGH

STANDARD

RIP RAP DETAILS

DOCUMENT NOT CONSIDERED FINAL UNLESS ALL SIGNATURES COMPLETED

CDM Smith
CDM SMITH
5400 Glenwood Avenue, Suite 400
Raleigh, NC 27612-3228
NC COA No. F-1255

DRAWN BY : VDK DATE : 8/18
CHECKED BY : THF DATE : 8/18
DESIGN ENGINEER : VDK DATE : 8/18

DWG. No.

10/11/2019
NORTH CAROLINA PROFESSIONAL SEAL 16301 ENGINEER TING HSIUNG FANG
DocuSigned by: Ting H. Fang
60E43C9AEA60462...

REVISIONS						SHEET NO.
NO.	BY:	DATE:	NO.	BY:	DATE:	S-18
1			3			TOTAL SHEETS
2			4			19

FILE: c:\pw_pf\bosechjo\dt130253\01_035_178P3P9_SMU_RR_018.dgn
DATE: 10/10/2019 11:06:19 AM

DocuSign Envelope ID: C919E33C-6218-4D4E-8ADF-F65E8C49C312

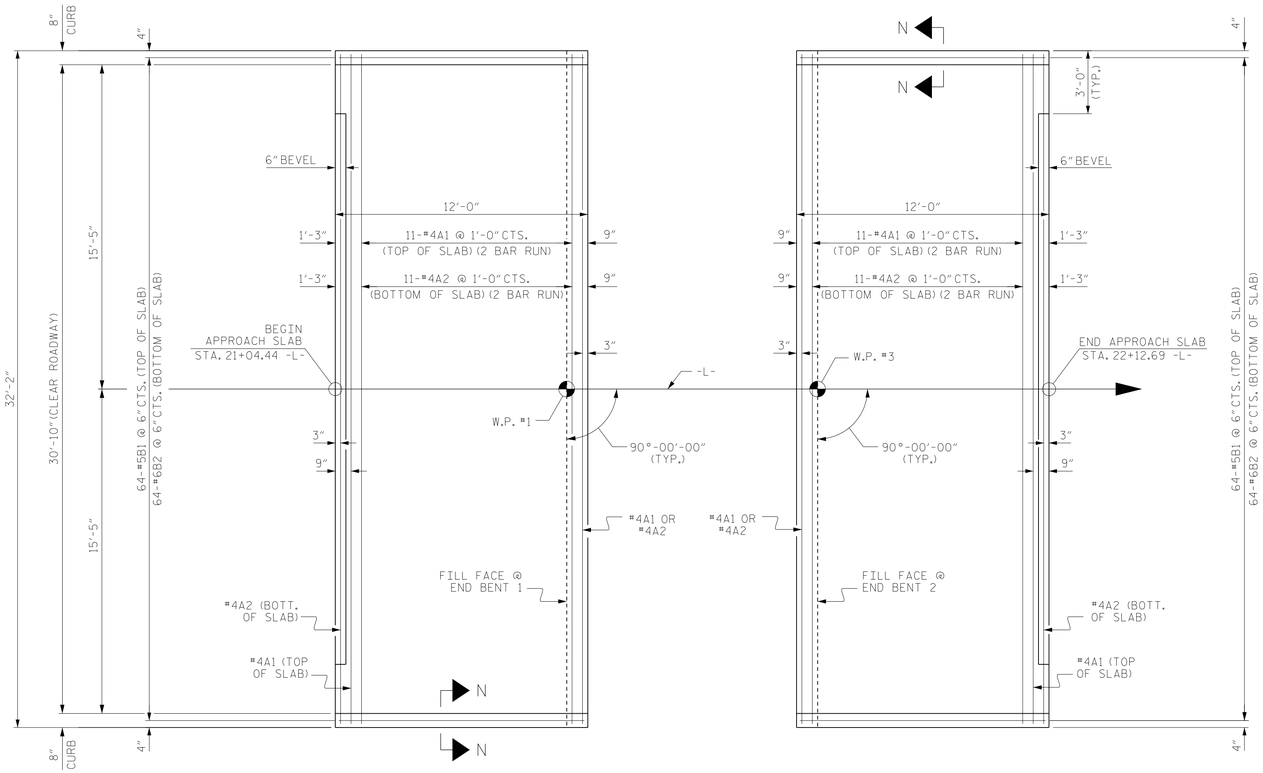

AT END BENT 1

AT END BENT 2

PLAN

DIMENSIONS SHOWN ARE TYPICAL FOR BOTH APPROACH SLABS

NOTES

FOR BRIDGE APPROACH FILL INCLUDING GEOTEXTILE, 4" Ø DRAINAGE PIPE, AND SELECT MATERIAL BACKFILL, SEE ROADWAY PLANS.

GEOTEXTILE SHALL BE TYPE 1 IN ACCORDANCE WITH THE STANDARD SPECIFICATIONS SECTION 1056.

SELECT MATERIAL BACKFILL (CLASS V OR CLASS VI) SHALL BE IN ACCORDANCE WITH STANDARD SPECIFICATIONS SECTION 1016.

SELECT MATERIAL BACKFILL IS TO BE CONTINUOUS ALONG FILL FACE OF BACKWALL FROM OUTSIDE EDGE TO OUTSIDE EDGE OF APPROACH SLAB.

FOR THE 4" Ø DRAINAGE PIPE OUTLET(S), SEE ROADWAY STANDARD DRAWINGS.

AREA BETWEEN THE WINGWALL AND APPROACH SLAB SHALL BE GRADED TO DRAIN THE WATER AWAY FROM THE FILL FACE OF THE BRIDGE AND SHALL BE PAVED. SEE ROADWAY PLANS.

APPROACH SLAB GROOVING IS NOT REQUIRED.

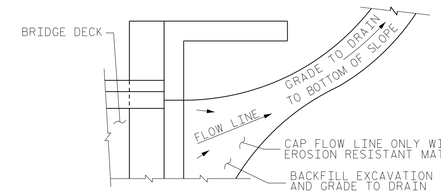

NOTE: IF THE APPROACH SLAB IS NOT CONSTRUCTED IMMEDIATELY AFTER THE BACKFILLING OF THE END BENT EXCAVATION, GRADE TO DRAIN TO THE BOTTOM OF THE SLOPE AND PROVIDE EROSION RESISTANT MATERIAL, SUCH AS FIBERGLASS ROVING OR AS DIRECTED BY THE ENGINEER TO PREVENT SOIL EROSION AND TO PROTECT THE AREA ADJACENT TO THE STRUCTURE. THE CONTRACTOR WILL BE REQUIRED TO REMOVE THESE MATERIALS PRIOR TO CONSTRUCTION OF THE APPROACH SLAB.

BILL OF MATERIAL

APPROACH SLAB AT EB 1

BAR	NO.	SIZE	TYPE	LENGTH	WEIGHT
* A1	26	#4	STR	16'-11"	294
A2	26	#4	STR	16'-9"	291
* B1	64	#5	STR	11'-2"	745
B2	64	#6	STR	11'-8"	1121
REINFORCING STEEL				LBS.	1412
* EPOXY COATED REINFORCING STEEL				LBS.	1039
CLASS AA CONCRETE				C. Y.	18.4

APPROACH SLAB AT EB 2

BAR	NO.	SIZE	TYPE	LENGTH	WEIGHT
* A1	26	#4	STR	16'-11"	294
A2	26	#4	STR	16'-9"	291
* B1	64	#5	STR	11'-2"	745
B2	64	#6	STR	11'-8"	1121
REINFORCING STEEL				LBS.	1412
* EPOXY COATED REINFORCING STEEL				LBS.	1039
CLASS AA CONCRETE				C. Y.	18.4

SPLICE LENGTHS

BAR SIZE	EPOXY COATED	UNCOATED
#4	2'-0"	1'-9"
#5	2'-6"	2'-2"
#6	3'-10"	2'-7"

TEMPORARY DRAINAGE DETAIL

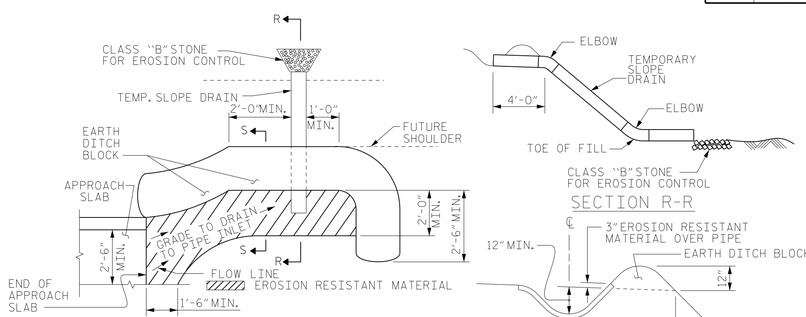

PLAN VIEW

SECTION R-R

SECTION S-S

NOTE: IMMEDIATELY AFTER THE CONSTRUCTION OF THE APPROACH SLAB, THE CONTRACTOR SHALL PROVIDE TEMPORARY BERM AND SLOPE DRAIN. CONTRACTOR SHALL GRADE TO PIPE INLET AND PROVIDE EROSION RESISTANT MATERIAL AS SHOWN. THE EROSION RESISTANT MATERIAL SHALL BE EITHER 1) ASPHALT PLANT MIX, TYPE 1 OR TYPE 2, MIN. 2" DEPTH, 2) EROSION CONTROL MAT, OR 3) CONCRETE, AS DIRECTED BY THE ENGINEER. THE SLOPE DRAIN SHALL CONSIST OF A NON-PERFORATED TEMPORARY DRAINAGE PIPE, 12 INCHES IN DIAMETER.

TEMPORARY BERM AND SLOPE DRAIN DETAILS

(TO BE USED WHEN SHOULDER BERM GUTTER IS REQUIRED)

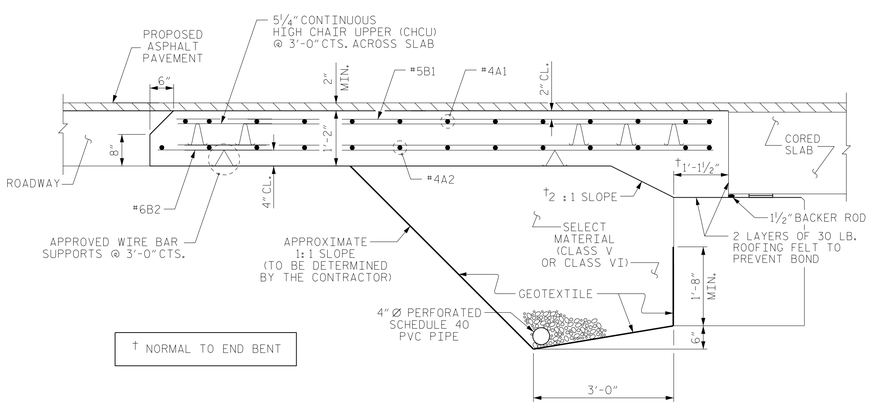

† NORMAL TO END BENT

SECTION THRU SLAB

(TYPE II - MODIFIED APPROACH FILL)

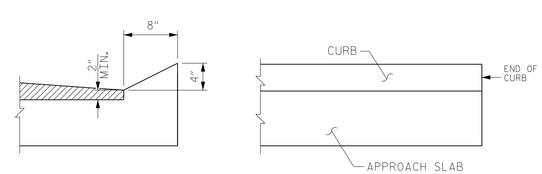

SECTION N-N

END OF CURB

TYPICAL FOR BOTH APPROACH SLABS

CURB DETAILS

PROJECT NO. B-5308

SAMPSON COUNTY

STATION: 21+64.00 -L-

DOCUMENT NOT CONSIDERED FINAL UNLESS ALL SIGNATURES COMPLETED

CDM Smith

CDM SMITH
5400 Glenwood Avenue, Suite 400
Raleigh, NC 27612-3228
NC COA No. F-1255

DRAWN BY : VDK DATE : 8/18
CHECKED BY : THF DATE : 8/18
DESIGN ENGINEER : VDK DATE : 8/18

DWG. No.

10/11/2019

NORTH CAROLINA PROFESSIONAL SEAL 16301 ENGINEER TING-HSIUNG FANG

DocuSigned by: Ting H. Fang
60E43C9AEA60462...

STATE OF NORTH CAROLINA
DEPARTMENT OF TRANSPORTATION
RALEIGH

STANDARD
BRIDGE APPROACH SLAB
FOR PRESTRESSED CONCRETE
CORED SLAB UNIT
(SUB-REGIONAL TIER)
90° SKEW

REVISIONS								SHEET NO.
NO.	BY:	DATE:	NO.	BY:	DATE:			S-19
1			3					TOTAL SHEETS
2			4					19

STD. NO. BAS_33_90S

FILE: c:\pw_pll\boeschtp\d130253\401_037_17BP2879_SMU_AS_019.dgn
DATE: 10/10/2019 11:06:27 AM

DocuSign Envelope ID: C919E33C-6218-4D4E-8ADF-F65E8C49C312

STANDARD NOTES

DESIGN DATA:

SPECIFICATIONS	A.A.S.H.T.O. (CURRENT)
LIVE LOAD	SEE PLANS
IMPACT ALLOWANCE	SEE A.A.S.H.T.O.
STRESS IN EXTREME FIBER OF	
STRUCTURAL STEEL - AASHTO M270 GRADE 36	20,000 LBS. PER SQ. IN.
- AASHTO M270 GRADE 50W	27,000 LBS. PER SQ. IN.
- AASHTO M270 GRADE 50	27,000 LBS. PER SQ. IN.
REINFORCING STEEL IN TENSION	
GRADE 60	24,000 LBS. PER SQ. IN.
CONCRETE IN COMPRESSION	1,200 LBS. PER SQ. IN.
CONCRETE IN SHEAR	SEE A.A.S.H.T.O.
STRUCTURAL TIMBER - TREATED OR	
UNTREATED - EXTREME FIBER STRESS	1,800 LBS. PER SQ. IN.
COMPRESSION PERPENDICULAR TO GRAIN OF TIMBER	375 LBS. PER SQ. IN.
EQUIVALENT FLUID PRESSURE OF EARTH	30 LBS. PER CU. FT. (MINIMUM)

MATERIAL AND WORKMANSHIP:

EXCEPT AS MAY OTHERWISE BE SPECIFIED ON PLANS OR IN THE SPECIAL PROVISIONS, ALL MATERIAL AND WORKMANSHIP SHALL BE IN ACCORDANCE WITH THE 2018 "STANDARD SPECIFICATIONS FOR ROADS AND STRUCTURES" OF THE N.C. DEPARTMENT OF TRANSPORTATION.

STEEL SHEET PILING FOR PERMANENT OR TEMPORARY APPLICATIONS SHALL BE HOT ROLLED.

CONCRETE:

UNLESS OTHERWISE REQUIRED ON PLANS, CLASS A CONCRETE SHALL BE USED FOR ALL PORTIONS OF ALL STRUCTURES WITH THE EXCEPTION THAT: CLASS AA CONCRETE SHALL BE USED IN BRIDGE SUPERSTRUCTURES, ABUTMENT BACKWALLS, AND APPROACH SLABS; AND CLASS B CONCRETE SHALL BE USED FOR SLOPE PROTECTION AND RIP RAP.

CONCRETE CHAMFERS:

UNLESS OTHERWISE NOTED ON THE PLANS, ALL EXPOSED CORNERS ON STRUCTURES SHALL BE CHAMFERED 3/4" WITH THE FOLLOWING EXCEPTIONS: TOP CORNERS OF CURBS MAY BE ROUNDED TO 1-1/2" RADIUS WHICH IS BUILT INTO CURB FORMS; CORNERS OF TRANSVERSE FLOOR EXPANSION JOINTS SHALL BE ROUNDED WITH A 1/4" FINISHING TOOL UNLESS OTHERWISE REQUIRED ON PLANS; AND CORNERS OF EXPANSION JOINTS IN THE ROADWAY FACES AND TOPS OF CURBS AND SIDEWALKS SHALL BE ROUNDED TO A 1/4" RADIUS WITH A FINISHING STONE OR TOOL UNLESS OTHERWISE REQUIRED ON PLANS.

DOWELS:

DOWELS WHEN INDICATED ON PLANS AS FOR CULVERT EXTENSIONS, SHALL BE EMBEDDED AT LEAST 12" INTO THE OLD CONCRETE AND GROUTED INTO PLACE WITH 1:2 CEMENT MORTAR.

ALLOWANCE FOR DEAD LOAD DEFLECTION, SETTLEMENT, ETC. IN CASTING SUPERSTRUCTURES:

BRIDGES SHALL BE BUILT ON THE GRADE OR VERTICAL CURVE SHOWN ON PLANS. SLABS, CURBS AND PARAPETS SHALL CONFORM TO THE GRADE OR CURVE.

ALL DIMENSIONS WHICH ARE GIVEN IN SECTION AND ARE AFFECTED BY DEAD LOAD DEFLECTIONS ARE DIMENSIONS AT CENTER LINE OF BEARING UNLESS OTHERWISE NOTED ON PLANS. IN SETTING FORMS FOR STEEL BEAM BRIDGES AND PRESTRESSED CONCRETE GIRDER BRIDGES, ADJUSTMENTS SHALL BE MADE DUE TO THE DEAD LOAD DEFLECTIONS FOR THE ELEVATIONS SHOWN. WHERE BLOCKS ARE SHOWN OVER BEAMS FOR BUILDING UP TO THE SLAB, THE VERTICAL DIMENSIONS OF THE BLOCKS SHALL BE ADJUSTED BETWEEN BEARINGS TO COMPENSATE FOR DEAD LOAD DEFLECTIONS, VERTICAL CURVE ORDINATE, AND ACTUAL BEAM CAMBER. WHERE BOTTOM OF SLAB IS IN LINE WITH BOTTOM OF TOP FLANGES, DEPTH OF SLAB BETWEEN BEARINGS SHALL BE ADJUSTED TO COMPENSATE FOR DEAD LOAD DEFLECTION, VERTICAL CURVE ORDINATE, AND ACTUAL BEAM CAMBER.

IN SETTING FALSEWORK AND FORMS FOR REINFORCED CONCRETE SPANS, AN ALLOWANCE SHALL BE MADE FOR DEAD LOAD DEFLECTIONS, SETTLEMENT OF FALSEWORK, AND PERMANENT CAMBER WHICH SHALL BE PROVIDED FOR IN ADDITION TO THE ELEVATIONS SHOWN. AFTER REMOVAL OF THE FALSEWORK, THE FINISHED STRUCTURES SHALL CONFORM TO THE PROFILE AND ELEVATIONS SHOWN ON THE PLANS AND CONSTRUCTION ELEVATIONS FURNISHED BY THE ENGINEER.

DETAILED DRAWINGS FOR FALSEWORK OR FORMS FOR BRIDGE SUPERSTRUCTURE AND ANY STRUCTURE OR PARTS OF A STRUCTURE AS NOTED ON THE PLANS SHALL BE SUBMITTED TO THE ENGINEER FOR APPROVAL BEFORE CONSTRUCTION OF THE FALSEWORK OR FORMS IS STARTED.

REINFORCING STEEL:

ALL REINFORCING STEEL SHALL BE DEFORMED. DIMENSIONS RELATIVE TO PLACEMENT OF REINFORCING ARE TO CENTERS OF BARS UNLESS OTHERWISE INDICATED IN THE PLANS. DIMENSIONS ON BAR DETAILS ARE TO CENTERS OF BARS OR ARE OUT TO OUT AS INDICATED ON PLANS.

WIRE BAR SUPPORTS SHALL BE PROVIDED FOR REINFORCING STEEL WHERE INDICATED ON THE PLANS. WHEN BAR SUPPORT PIECES ARE PLACED IN CONTINUOUS LINES, THEY SHALL BE SO PLACED THAT THE ENDS OF THE SUPPORTING WIRES SHALL BE LAPPED TO LOCK LEGS ON ADJOINING PIECES.

STRUCTURAL STEEL:

AT THE CONTRACTOR'S OPTION, HE MAY SUBSTITUTE 7/8" Ø SHEAR STUDS FOR THE 3/4" Ø STUDS SPECIFIED ON THE PLANS. THIS SUBSTITUTION SHALL BE MADE AT THE RATE OF 3 - 7/8" Ø STUDS FOR 4 - 3/4" Ø STUDS, AND STUD SPACING CHANGES SHALL BE MADE AS NECESSARY TO PROVIDE THE SAME EQUIVALENT NUMBER OF 7/8" Ø STUDS ALONG THE BEAM AS SHOWN FOR 3/4" Ø STUDS BASED ON THE RATIO OF 3 - 7/8" Ø STUDS FOR 4 - 3/4" Ø STUDS. STUDS OF THE LENGTH SPECIFIED ON THE PLANS MUST BE PROVIDED. THE MAXIMUM SPACING SHALL BE 2'-0".

EXCEPT AT THE INTERIOR SUPPORTS OF CONTINUOUS BEAMS WHERE THE COVER PLATE IS IN CONTACT WITH BEARING PLATE, THE CONTRACTOR MAY, AT HIS OPTION, SUBSTITUTE FOR THE COVER PLATES DESIGNATED ON THE PLANS COVER PLATES OF THE EQUIVALENT AREA PROVIDED THESE PLATES ARE AT LEAST 5/16" IN THICKNESS AND DO NOT EXCEED A WIDTH EQUAL TO THE FLANGE WIDTH LESS 2" OR A THICKNESS EQUAL TO 2 TIMES THE FLANGE THICKNESS. THE SIZE OF FILLET WELDS SHALL CONFORM TO THE REQUIREMENTS OF THE CURRENT ANSI/AASHTO/AWS "BRIDGE WELDING CODE". ELECTROSLAG WELDING WILL NOT BE PERMITTED.

WITH THE SOLE EXCEPTION OF EDGES AT SURFACES WHICH BEAR ON OTHER SURFACES, ALL SHARP EDGES AND ENDS OF SHAPES AND PLATES SHALL BE SLIGHTLY ROUNDED BY SUITABLE MEANS TO A RADIUS OF APPROXIMATELY 1/16 INCH OR EQUIVALENT FLAT SURFACE AT A SUITABLE ANGLE PRIOR TO PAINTING, GALVANIZING, OR METALLIZING.

HANDRAILS AND POSTS:

METAL STANDARDS AND FACES OF THE CONCRETE END POSTS FOR THE METAL RAIL SHALL BE SET NORMAL TO THE GRADE OF THE CURB, UNLESS OTHERWISE SHOWN ON PLANS. THE METAL RAIL AND TOPS OF CONCRETE POSTS USED WITH THE ALUMINUM RAIL SHALL BE BUILT PARALLEL TO THE GRADE OF THE CURB.

METAL HANDRAILS SHALL BE IN ACCORDANCE WITH THE PLANS. RAILS SHALL BE AS MANUFACTURED FOR BRIDGE RAILING. CASTINGS SHALL BE OF A UNIFORM APPEARANCE. FINS AND OTHER DEFORMATIONS RESULTING FROM CASTING OR OTHERWISE SHALL BE REMOVED IN A MANNER SO THAT A UNIFORM COLORING OF THE COMPLETED CASTING SHALL BE OBTAINED. CASTINGS WITH DISCOLORATIONS OR OF NON-UNIFORM COLORING WILL NOT BE ACCEPTED. CERTIFIED MILL REPORTS ARE REQUIRED FOR METAL RAILS AND POSTS.

SPECIAL NOTES:

GENERALLY, IN CASE OF DISCREPANCY, THIS STANDARD SHEET OF NOTES SHALL GOVERN OVER THE SPECIFICATIONS, BUT THE REMAINDER OF THE PLANS SHALL GOVERN OVER NOTES HEREON, AND SPECIAL PROVISIONS SHALL GOVERN OVER ALL. SEE SPECIFICATIONS ARTICLE 105-4.

ENGLISH

JANUARY, 1990