09/08/99

TIP PROJECT: W–5601GA

CONTRACT: DC00326

See Sheet 1-A For Index of Sheets

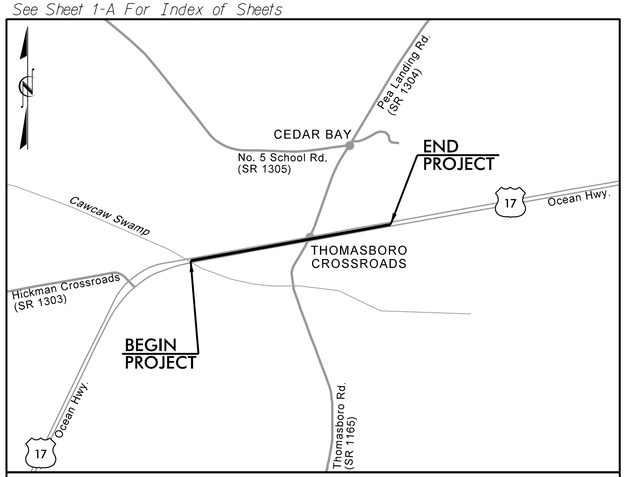

VICINITY MAP (NTS)

STATE OF NORTH CAROLINA
DIVISION OF HIGHWAYS

BRUNSWICK COUNTY

STATE	STATE PROJECT REFERENCE NO.	SHEET NO.	TOTAL SHEETS
N.C.	W–5601GA	1	

STATE PROJ. NO.	F. A. PROJ. NO.	DESCRIPTION
50138.1.184	HSIP–0017 (158)	PE
50138.3.184		CONST

LOCATION: US–17 AT SR 1165 (THOMASBORO ROAD)/SR 1304 (PEA LANDING ROAD)



TYPE OF WORK: GRADING, DRAINAGE, PAVING, WIDENING, RESURFACING, AND SIGNALS

RFC

RELEASED FOR CONSTRUCTION

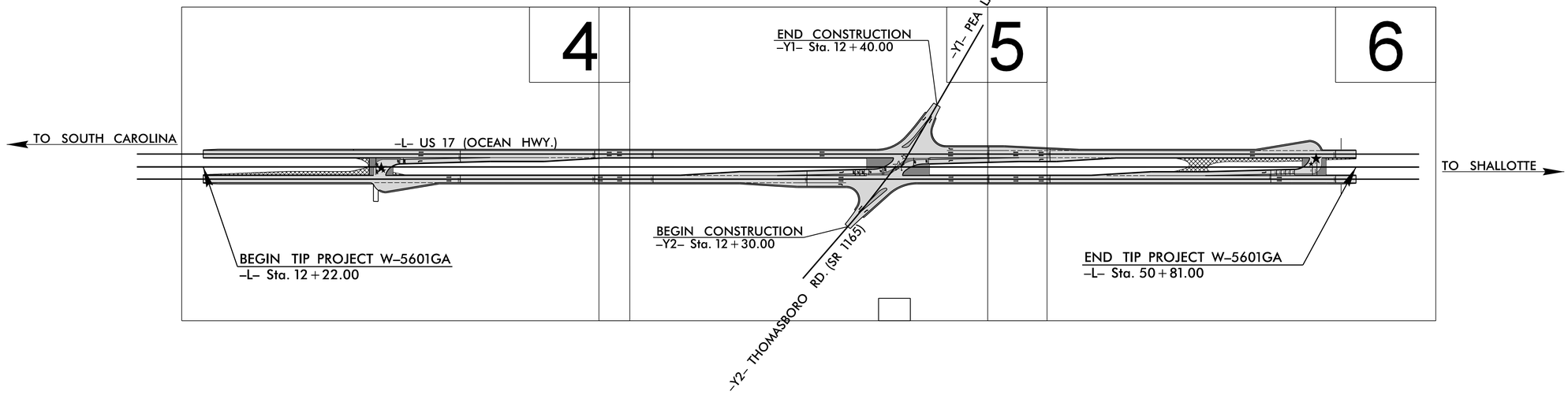



DOCUMENT NOT CONSIDERED FINAL UNLESS ALL SIGNATURES COMPLETED

NOTE:
1. THIS PROJECT IS NOT WITHIN ANY MUNICIPAL BOUNDARIES

EXISTING SIGNAL

PROPOSED SIGNAL

GRAPHIC SCALES

50 25 0 50 100
PLANS

50 25 0 50 100
PROFILE (HORIZONTAL)

10 5 0 10 20
PROFILE (VERTICAL)

DESIGN DATA

ADT 2018 = 21,850
ADT 2040 = 43,500
V = 60 MPH
FUNC CLASS = ARTERIAL
STATEWIDE TIER

PROJECT LENGTH

LENGTH ROADWAY TIP PROJECT W–5601GA..... 0.746 miles
LENGTH STRUCTURE TIP PROJECT W–5601GA..... 0 miles
TOTAL LENGTH OF PROJECT W–5601GA..... 0.746 miles

PLANS PREPARED BY:

RK&K
RUMMEL, KLEPPER & KAHL, LLP
8601 SIX FORKS ROAD, FORUM 1, SUITE 700
RALEIGH, NORTH CAROLINA 27615–3960
NC LICENSE NO. F–0112
1–888–521–4455 OR 919–878–9560

FOR NORTH CAROLINA DEPARTMENT OF TRANSPORTATION

2018 STANDARD SPECIFICATIONS

RIGHT OF WAY DATE: October 20, 2019

LETTING DATE: December 16, 2021

Michael Merritt, P.E.
PROJECT ENGINEER

Scott Blevins, P.E.
PROJECT DESIGN ENGINEER

NCDOT CONTACT: Michael Bass
PROJECT MANAGER – DIVISION 3

HYDRAULICS ENGINEER

NORTH CAROLINA PROFESSIONAL SEAL 51640 ENGINEER COURTLAND A. HOFFMAN

DocuSigned by: Courtland A. Hoffman
SIGNATURE: P.E. 11/17/2021

ROADWAY DESIGN ENGINEER

NORTH CAROLINA PROFESSIONAL SEAL 16725 ENGINEER SCOTT D. BLEVINS

DocuSigned by: Scott D. Blevins
SIGNATURE: P.E. 11/17/2021

STATE OF NORTH CAROLINA • DEPARTMENT OF TRANSPORTATION •

11/17/2021
R:\Roadway\Proj\W-5601GA_Rdy_tsh.dgn
dhefler

8/17/99

INDEX of SHEETS, GENERAL NOTES, and LIST of STANDARDS

PROJECT REFERENCE NO.	SHEET NO.
W-5601GA	1A

ROADWAY DESIGN ENGINEER

NORTH CAROLINA PROFESSIONAL SEAL 035225 ENGINEER SCOTT D. BLEVINS

11/17/2021

DOCUMENT NOT CONSIDERED FINAL UNLESS ALL SIGNATURES COMPLETED

INDEX OF SHEETS

SHEET NUMBER	SHEET
1	TITLE SHEET
1A	INDEX OF SHEETS, GENERAL NOTES, AND LIST OF STANDARD DRAWINGS
1B	CONVENTIONAL SYMBOLS
2A-1	PAVEMENT SCHEDULE, TYPICAL SECTIONS, WEDGING DETAILS,
2B-1	MEDIAN U-TURN BULB DETAIL
2B-2	INTERSECTION DETAIL
2C-1	NCDOT SPECIAL DETAILS
3B-1	SUMMARY OF EARTHWORK, PAVEMENT REMOVAL SUMMARY,
3D-1	DRAINAGE SUMMARIES
3G-1	SUMMARY OF SUBSURFACE DRAINAGE
4 THRU 6	PLAN SHEETS
7 THRU 9	PROFILE SHEETS
RW02C-1 THRU RW06	RIGHT OF WAY PLAN SHEETS
TMP-1 THRU TMP-11	TRAFFIC MANAGEMENT PLANS
PMP-1 THRU PMP-4	PAVEMENT MARKING PLANS
EC-1 THRU EC-9	EROSION CONTROL PLANS
SIGN-1 THRU SIGN-6A	SIGNING PLANS
SIG-1 THRU SIG-?	SIGNAL PLANS
UO-1 THRU UO-4	UTILITY BY OTHERS PLANS
X-0 THRU X-14	CROSS SECTIONS

LIST OF STANDARD DRAWINGS

EFF. 01-16-2018
REV.

2018 ROADWAY ENGLISH STANDARD DRAWINGS

The following Roadway Standards as appear in "Roadway Standard Drawings" Highway Design Branch - N. C. Department of Transportation - Raleigh, N. C., Dated January, 2018 are applicable to this project and by reference hereby are considered a part of these plans:

STD.NO.	TITLE
DIVISION 2 - EARTHWORK	
225.02	Guide for Grading Subgrade - Secondary and Local
225.04	Method of Obtaining Superelevation - Two Lane Pavement
225.05	Method of Obtaining Superelevation - Divided Highways
225.06	Method of Grading Sight Distance at Intersections
240.01	Guide for Berm Ditch Construction
DIVISION 3 - PIPE CULVERTS	
300.01	Method of Pipe Installation
310.10	Driveway Pipe Construction
DIVISION 5 - SUBGRADE, BASES AND SHOULDERS	
560.01	Method of Shoulder Construction - High Side of Superelevated Curve - Method I
DIVISION 6 - ASPHALT BASES AND PAVEMENTS	
654.01	Pavement Repairs
DIVISION 8 - INCIDENTALS	
840.00	Concrete Base Pad for Drainage Structures
840.19	Concrete Grated Drop Inlet Type 'D' - 12" thru 36" Pipe
840.22	Frames and Wide Slot Sag Grates
840.31	Concrete Junction Box - 12" thru 66" Pipe
840.35	Traffic Bearing Grated Drop Inlet - for Cast Iron Double Frame and Grates
840.37	Steel Grate and Frame
840.54	Manhole Frame and Cover
840.66	Drainage Structure Steps
848.04	Street Turnout
852.01	Concrete Islands
852.06	Method for Placement of Drop Inlets in Concrete Islands
876.02	Guide for Rip Rap at Pipe Outlets

LIST OF GENERAL NOTES

2018 SPECIFICATIONS
EFFECTIVE: 01-16-2018
REVISED:

GRADING AND SURFACING OR RESURFACING AND WIDENING:

THE GRADE LINES SHOWN DENOTE THE FINISHED ELEVATION OF THE PROPOSED SURFACING AT GRADE POINTS SHOWN ON THE TYPICAL SECTIONS. WHERE NO GRADE LINES ARE SHOWN, THE PROFILES SHOWN DENOTE THE TOP ELEVATION OF THE EXISTING PAVEMENT ALONG THE CENTER LINE OF SURVEY ON WHICH THE PROPOSED RESURFACING WILL BE PLACED. GRADE LINES MAY BE ADJUSTED BY THE ENGINEER IN ORDER TO SECURE A PROPER TIE-IN.

CLEARING:

CLEARING ON THIS PROJECT SHALL BE PERFORMED TO THE LIMITS ESTABLISHED BY METHOD III MODIFIED.

SUPERELEVATION:

ALL CURVES ON THIS PROJECT SHALL BE SUPERELEVATED IN ACCORDANCE WITH STD. NO. 225.05 USING THE RATE OF SUPERELEVATION AND RUNOFF SHOWN ON THE PLANS. SUPERELEVATION IS TO BE REVOLVED ABOUT THE GRADE POINTS SHOWN ON THE TYPICAL SECTIONS.

SHOULDER CONSTRUCTION:

ASPHALT, EARTH, AND CONCRETE SHOULDER CONSTRUCTION ON THE HIGH SIDE OF SUPERELEVATED CURVES SHALL BE IN ACCORDANCE WITH STD. NO. 560.02

SIDE ROADS:

THE CONTRACTOR WILL BE REQUIRED TO DO ALL NECESSARY WORK TO PROVIDE SUITABLE CONNECTIONS WITH ALL ROADS, STREETS, AND DRIVES ENTERING THIS PROJECT. THIS WORK WILL BE PAID FOR AT THE CONTRACT UNIT PRICE FOR THE PARTICULAR ITEMS INVOLVED.

DRIVEWAYS:

DRIVEWAYS SHALL BE CONSTRUCTED IN ACCORDANCE WITH STD. 848.02 USING 3 FOOT RADII OR RADII AS SHOWN ON THE PLANS. LOCATIONS OF DRIVES WILL BE AS SHOWN ON THE PLANS OR AS DIRECTED BY THE ENGINEER.

STREET TURNOUT:

STREET RETURNS SHALL BE CONSTRUCTED IN ACCORDANCE WITH STD. NO. 848.04 USING THE RADII NOTED ON PLANS.

UTILITIES:

UTILITY OWNERS ON THIS PROJECT ARE ATLANTIC TELEPHONE MEMEBERSHIP CORP..

ATT/T (TRANSMISSION) - FIBER OPTIC, BRUNSWICK COUNTY PUBLIC UTILITY,

BRUNSWICK ELECTRICAL MEMBERSHIP CORP., DUKENET COMMUNICATIONS, LLC

EARTHLINK BUSINESS, TIME WARNER CABLE, AND NCDOT

ANY RELOCATION OF EXISTING UTILITIES WILL BE ACCOMPLISHED BY OTHERS.

RK&K
P: (919) 878-9560
8601 Six Forks Road, Forum 1,Suite 700
Raleigh, North Carolina 27615-3960
NC License No, F-0112
Engineers | Construction Managers | Planners | Scientists
www.rk.com
Responsive People | Creative Solutions

11/17/2021
K:\Roadway\Proj\W-5601GA_Rdy_psh01A.dgn
abeller

9/10/2021

PROJECT REFERENCE NO.	SHEET NO.
W-5601GA	1-B

STATE OF NORTH CAROLINA, DIVISION OF HIGHWAYS

CONVENTIONAL PLAN SHEET SYMBOLS

Note: Not to Scale

BOUNDARIES AND PROPERTY:

- State Line
- County Line
- Township Line
- City Line
- Reservation Line
- Property Line
- Existing Iron Pin (EIP) — EIP
- Computed Property Corner
- Existing Concrete Monument (ECM) — ECM
- Parcel/Sequence Number — 123
- Existing Fence Line
- Proposed Woven Wire Fence
- Proposed Chain Link Fence
- Proposed Barbed Wire Fence
- Existing Wetland Boundary — WLB
- Proposed Wetland Boundary — WLB
- Existing Endangered Animal Boundary — EAB
- Existing Endangered Plant Boundary — EPB
- Existing Historic Property Boundary — HPB
- Known Contamination Area: Soil — S
- Potential Contamination Area: Soil — S
- Known Contamination Area: Water — W
- Potential Contamination Area: Water — W
- Contaminated Site: Known or Potential

BUILDINGS AND OTHER CULTURE:

- Gas Pump Vent or U/G Tank Cap
- Sign — S
- Well — W
- Small Mine
- Foundation
- Area Outline
- Cemetery
- Building
- School
- Church
- Dam

HYDROLOGY:

- Stream or Body of Water
- Hydro, Pool or Reservoir
- Jurisdictional Stream — JS
- Buffer Zone 1 — BZ 1
- Buffer Zone 2 — BZ 2
- Flow Arrow
- Disappearing Stream
- Spring
- Wetland
- Proposed Lateral, Tail, Head Ditch — FLOW
- False Sump

RAILROADS:

- Standard Gauge — CSX TRANSPORTATION
- RR Signal Milepost — MILEPOST 35
- Switch — SWITCH
- RR Abandoned
- RR Dismantled

RIGHT OF WAY & PROJECT CONTROL:

- Primary Horiz Control Point
- Primary Horiz and Vert Control Point
- Secondary Horiz and Vert Control Point
- Vertical Benchmark
- Existing Right of Way Monument
- Proposed Right of Way Monument (Rebar and Cap)
- Proposed Right of Way Monument (Concrete)
- Existing Permanent Easement Monument
- Proposed Permanent Easement Monument (Rebar and Cap)
- Existing C/A Monument
- Proposed C/A Monument (Rebar and Cap)
- Proposed C/A Monument (Concrete)
- Existing Right of Way Line
- Proposed Right of Way Line — RW
- Existing Control of Access Line — CA
- Proposed Control of Access Line — CA
- Proposed ROW and CA Line — RW CA
- Existing Easement Line — E
- Proposed Temporary Construction Easement — E
- Proposed Temporary Drainage Easement — TDE
- Proposed Permanent Drainage Easement — PDE
- Proposed Permanent Drainage/Utility Easement — DUE
- Proposed Permanent Utility Easement — PUE
- Proposed Temporary Utility Easement — TUE
- Proposed Aerial Utility Easement — AUE

ROADS AND RELATED FEATURES:

- Existing Edge of Pavement
- Existing Curb
- Proposed Slope Stakes Cut — C
- Proposed Slope Stakes Fill — F
- Proposed Curb Ramp — CR
- Existing Metal Guardrail
- Proposed Guardrail
- Existing Cable Guiderail
- Proposed Cable Guiderail
- Equality Symbol
- Pavement Removal

VEGETATION:

- Single Tree
- Single Shrub
- Hedge

- Woods Line
- Orchard
- Vineyard — Vineyard

EXISTING STRUCTURES:

MAJOR:

- Bridge, Tunnel or Box Culvert — CONC
- Bridge Wing Wall, Head Wall and End Wall — CONC WW

MINOR:

- Head and End Wall — CONC HW
- Pipe Culvert
- Footbridge
- Drainage Box: Catch Basin, DI or JB — CB
- Paved Ditch Gutter
- Storm Sewer Manhole — S
- Storm Sewer — S

UTILITIES:

** SUE – Subsurface Utility Engineering*
LOS – Level of Service – A,B,C or D (Accuracy)

POWER:

- Existing Power Pole
- Proposed Power Pole
- Existing Joint Use Pole
- Proposed Joint Use Pole
- Power Manhole — P
- Power Line Tower
- Power Transformer
- U/G Power Cable Hand Hole — HH
- H–Frame Pole
- U/G Power Line Test Hole (SUE – LOS A)*
- U/G Power Line (SUE – LOS B)* — P
- U/G Power Line (SUE – LOS C)* — P
- U/G Power Line (SUE – LOS D)* — P

TELEPHONE:

- Existing Telephone Pole
- Proposed Telephone Pole
- Telephone Manhole — T
- Telephone Pedestal — T
- Telephone Cell Tower
- U/G Telephone Cable Hand Hole — HH
- U/G Telephone Test Hole (SUE – LOS A)*
- U/G Telephone Cable (SUE – LOS B)* — T
- U/G Telephone Cable (SUE – LOS C)* — T
- U/G Telephone Cable (SUE – LOS D)* — T
- U/G Telephone Conduit (SUE – LOS B)* — TC
- U/G Telephone Conduit (SUE – LOS C)* — TC
- U/G Telephone Conduit (SUE – LOS D)* — TC
- U/G Fiber Optics Cable (SUE – LOS B)* — T FO
- U/G Fiber Optics Cable (SUE – LOS C)* — T FO
- U/G Fiber Optics Cable (SUE – LOS D)* — T FO

WATER:

- Water Manhole — W
- Water Meter
- Water Valve
- Water Hydrant
- U/G Water Line Test Hole (SUE – LOS A)*
- U/G Water Line (SUE – LOS B)* — W
- U/G Water Line (SUE – LOS C)* — W
- U/G Water Line (SUE – LOS D)* — W
- Above Ground Water Line — A/G Water

TV:

- TV Pedestal — C
- TV Tower
- U/G TV Cable Hand Hole — HH
- U/G TV Test Hole (SUE – LOS A)*
- U/G TV Cable (SUE – LOS B)* — TV
- U/G TV Cable (SUE – LOS C)* — TV
- U/G TV Cable (SUE – LOS D)* — TV
- U/G Fiber Optic Cable (SUE – LOS B)* — TV FO
- U/G Fiber Optic Cable (SUE – LOS C)* — TV FO
- U/G Fiber Optic Cable (SUE – LOS D)* — TV FO

GAS:

- Gas Valve
- Gas Meter
- U/G Gas Line Test Hole (SUE – LOS A)*
- U/G Gas Line (SUE – LOS B)* — G
- U/G Gas Line (SUE – LOS C)* — G
- U/G Gas Line (SUE – LOS D)* — G
- Above Ground Gas Line — A/G Gas

SANITARY SEWER:

- Sanitary Sewer Manhole
- Sanitary Sewer Cleanout
- U/G Sanitary Sewer Line — SS
- Above Ground Sanitary Sewer — A/G Sanitary Sewer
- SS Force Main Line Test Hole (SUE – LOS A)*
- SS Force Main Line (SUE – LOS B)* — FSS
- SS Force Main Line (SUE – LOS C)* — FSS
- SS Force Main Line (SUE – LOS D)* — FSS

MISCELLANEOUS:

- Utility Pole
- Utility Pole with Base
- Utility Located Object
- Utility Traffic Signal Box — S
- Utility Unknown U/G Line (SUE – LOS B)* — ?UTL
- U/G Tank; Water, Gas, Oil
- Underground Storage Tank, Approx. Loc. — UST
- A/G Tank; Water, Gas, Oil
- Geoenvironmental Boring
- Abandoned According to Utility Records — AATUR
- End of Information — E.O.I.

PROJECT REFERENCE NO.	SHEET NO.
W-5601GA	2A-1

ROADWAY DESIGN ENGINEER

NORTH CAROLINA PROFESSIONAL SEAL 21625 ENGINEER SCOTT D. BLEVINS

11/17/2021

PAVEMENT DESIGN ENGINEER

NORTH CAROLINA PROFESSIONAL SEAL 22696 ENGINEER CLARK S. MORRISON

11/17/2021

DOCUMENT NOT CONSIDERED FINAL UNLESS ALL SIGNATURES COMPLETED

PAVEMENT SCHEDULE

C1	PROP. APPROX. 1½″ ASPHALT CONCRETE SURFACE COURSE, TYPE S9.5B, AT AN AVERAGE RATE OF 165 LBS. PER SQ. YD.
C2	PROP. APPROX. 1½″ ASPHALT CONCRETE SURFACE COURSE, TYPE S9.5C, AT AN AVERAGE RATE OF 168 LBS. PER SQ. YD.
C3	PROP. APPROX. 3″ ASPHALT CONCRETE SURFACE COURSE, TYPE S9.5C, AT AN AVERAGE RATE OF 168 LBS. PER SQ. YD. IN EACH OF TWO LAYERS.
D1	PROP. APPROX. 4″ ASPHALT CONCRETE INTERMEDIATE COURSE, TYPE I19.0C, AT AN AVERAGE RATE OF 456 LBS. PER SQ. YD.
E1	PROP. APPROX. 4″ ASPHALT CONCRETE BASE COURSE, TYPE B25.0C, AT AN AVERAGE RATE OF 456 LBS. PER SQ. YD.
R1	5″ MONOLITHIC CONCRETE ISLAND (KEYED-IN)
T	EARTH MATERIAL
U	EXISTING PAVEMENT

NOTE: PAVEMENT EDGE SLOPES ARE 1:1 UNLESS SHOWN OTHERWISE.
SEE PLANS FOR LOCATION OF CONCRETE ISLANDS AND SIDEWALK.

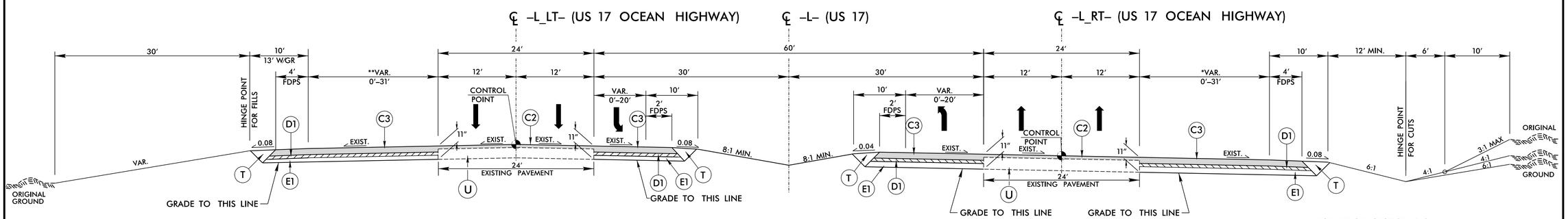

TYPICAL SECTION NO. 1

USE TYPICAL SECTION NO. 1
–L – Sta. 12+22.00 TO Sta. 50+81.00
*–L_RT– Sta. 17+91.50 TO Sta. 20+13.00 (RT)
–L – Sta. 12+22.00 TO Sta. 50+81.00
** –L_LT– Sta. 47+46.00 TO Sta. 49+64.00 (LT)

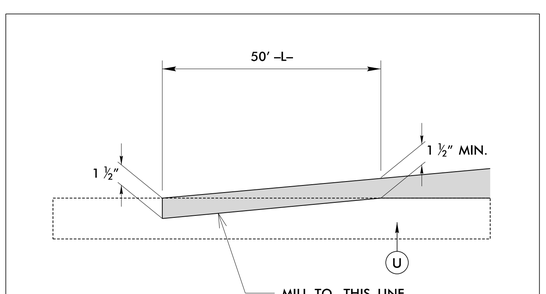

DETAIL SHOWING MILLED PAVEMENT TIE–IN

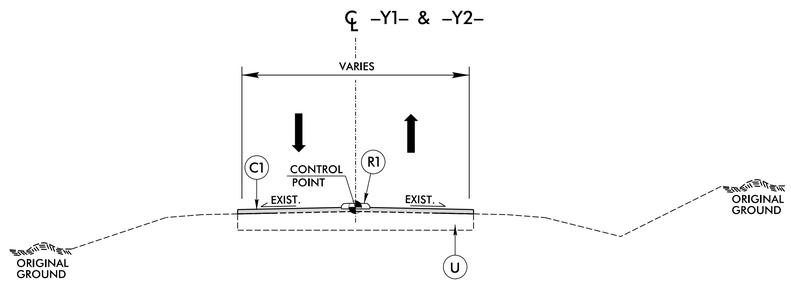

TYPICAL SECTION NO. 2

USE TYPICAL SECTION NO. 2
–Y1– Sta. 10+62.40 TO Sta. 12+05.00
–Y2– Sta. 12+85.00 TO Sta. 14+18.88

RK&K
P: (919) 878-9560
8601 Six Forks Road, Forum 1,Suite 700
Raleigh, North Carolina 27615-3960
NC License No. F-0112
Engineers | Construction Managers | Planners | Scientists
www.rkk.com
Responsive People | Creative Solutions

DETAIL OF TYPICAL MEDIAN U-TURN BULB

PROJECT REFERENCE NO.	SHEET NO.
W-5601GA	2B-1
R/W SHEET NO.	

ROADWAY DESIGN ENGINEER

NORTH CAROLINA PROFESSIONAL SEAL 043123 ENGINEER SCOTT D. BLEVINS

11/17/2021

DOCUMENT NOT CONSIDERED FINAL UNLESS ALL SIGNATURES COMPLETED

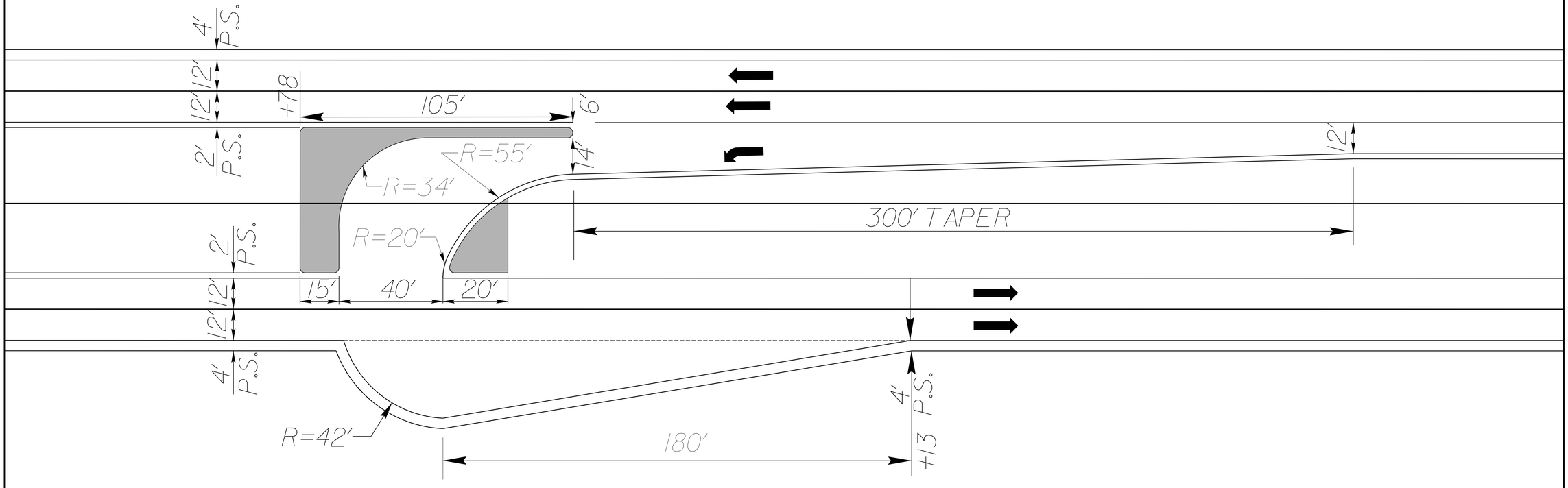

RKK
P: (919) 878-9560
8601 Six Forks Road, Forum 1,Suite 700
Raleigh, North Carolina 27615-3960
NC License No, F-0112
Engineers | Construction Managers | Planners | Scientists
www.rkk.com
Responsive People | Creative Solutions

11/17/2021
R:\Roadway\Proj\W-5601GA_Rdy_psh02B-1.dgn
shefler

PROJECT REFERENCE NO.	SHEET NO.
W-5601GA	2B-2
R/W SHEET NO.	

ROADWAY DESIGN ENGINEER

NORTH CAROLINA PROFESSIONAL SEAL 12/15 ENGINEER SCOTT D. BLEVINS

11/17/2021

DOCUMENT NOT CONSIDERED FINAL UNLESS ALL SIGNATURES COMPLETED

-Y1- AND -Y2- INTERSECTION DETAIL

SCALE 1" = 30'

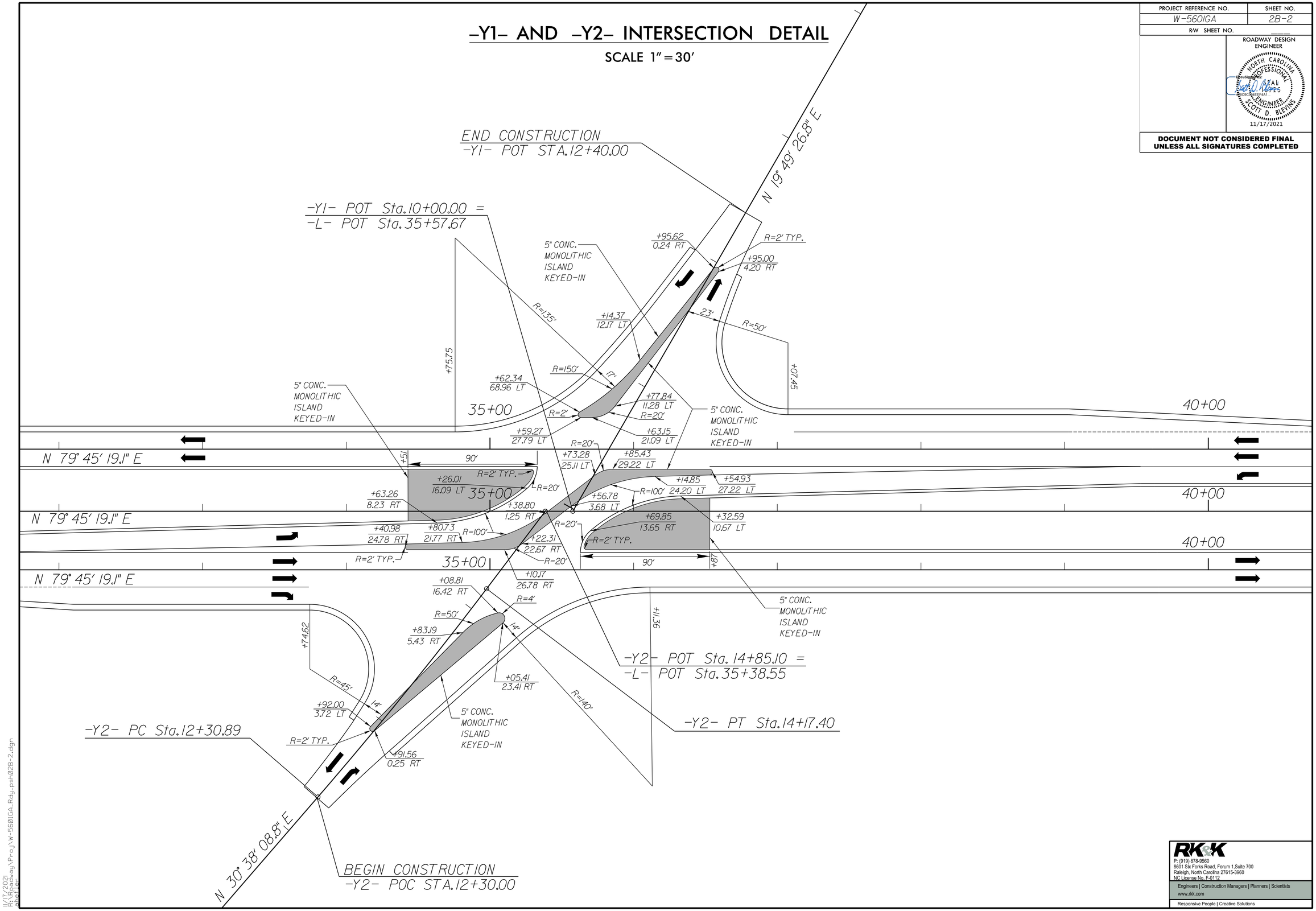

RK&K
P: (919) 878-9560
8601 Six Forks Road, Forum 1,Suite 700
Raleigh, North Carolina 27615-3960
NC License No. F-0112
Engineers | Construction Managers | Planners | Scientists
www.rkk.com
Responsive People | Creative Solutions

11/17/2021
R:\Roadway\Proj\W-5601GA_Rdy_psh02B-2.dgn

5/14/99

PROJECT REFERENCE NO.	SHEET NO.
W-5601GA	2C-1

STATE OF
NORTH CAROLINA
DEPT. OF TRANSPORTATION
DIVISION OF HIGHWAYS
RALEIGH, N.C.

ENGLISH DETAIL DRAWING FOR

METHOD OF CLEARING

MODIFIED METHOD - III

SHEET 1 OF 1

200D03

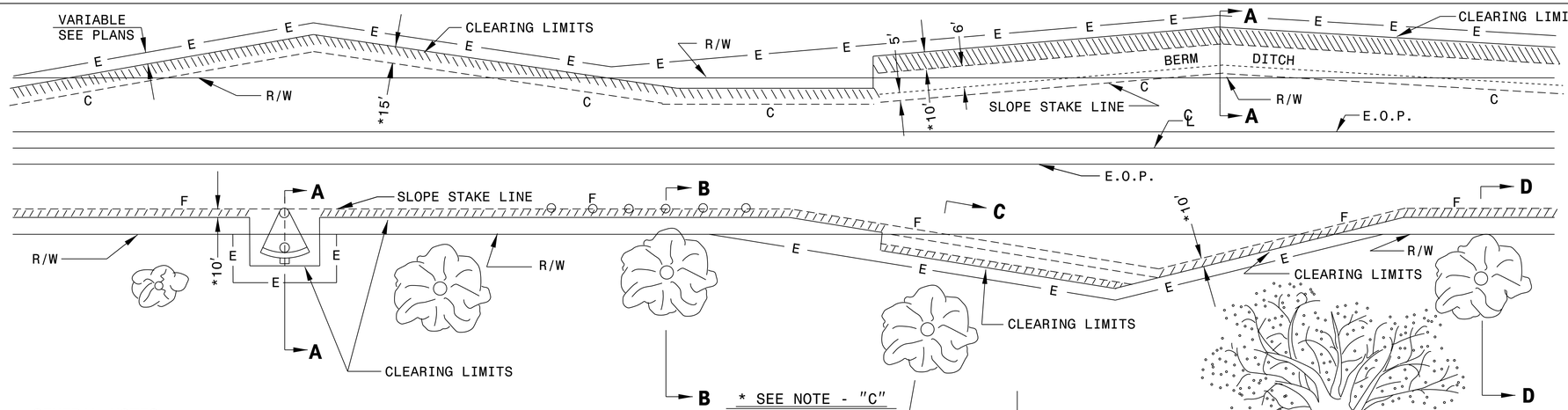

GENERAL NOTES:

1. REMOVE TREES OUTSIDE THE CLEARING LIMIT WHEN, IN THE OPINION OF THE ENGINEER, THE UTILITY OF A TREE WILL BE DESTROYED BY THE CONSTRUCTION OR THE CLEARING OPERATION.
2. CLEAR IN ACCORDANCE WITH THIS STANDARD EXCEPT WHERE ADDITIONAL CLEARING IS REQUIRED FOR SAFETY AS SHOWN ON THE PLANS.

METHOD III CLEARING LIMITS

(A) CUTS -- CLEAR TO CONSTRUCTION LIMITS.
(B) FILLS - CLEAR TO 5′/10′ * BEYOND CONSTRUCTION LIMITS, UNLESS SPECIFIED OTHERWISE BY WETLAND PERMIT.
(C) CUTS AND FILLS - WHEN THE CLEARING LIMITS (A AND B) EXCEED THE PROPOSED R/W OR PROPOSED CONSTRUCTION EASEMENTS, THEN CLEAR ONLY TO THE R/W OR CONSTRUCTION EASEMENT WHICHEVER IS GREATER.

* SEE NOTE - "C"

* FOR FILL HEIGHTS LESS THAN 10′ CLEAR TO 5′ BEYOND CONSTRUCTION LIMITS.
* FOR FILL HEIGHTS 10′ OR GREATER CLEAR TO 10′ BEYOND CONSTRUCTION LIMITS.
** PLACE SILT FENCE AT 5′ BEYOND TOE OF SLOPE IN FILL SECTIONS WITH LESS THAN 10′. PLACE SILT FENCE AT 10′ BEYOND TOE OF SLOPE IN FILL SECTIONS WITH 10′ OR GREATER.

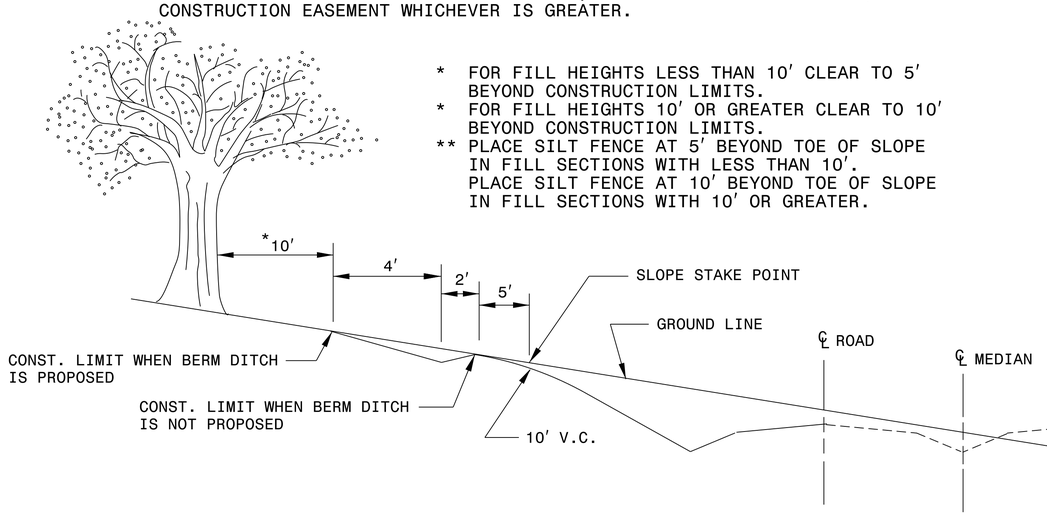

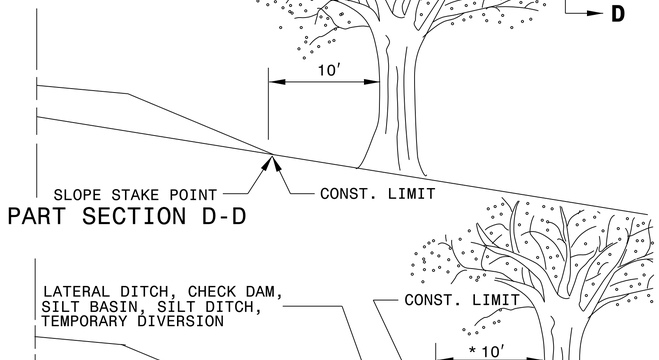

PART SECTION D-D

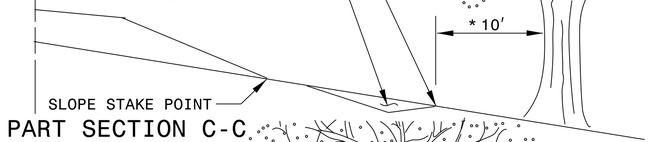

PART SECTION C-C

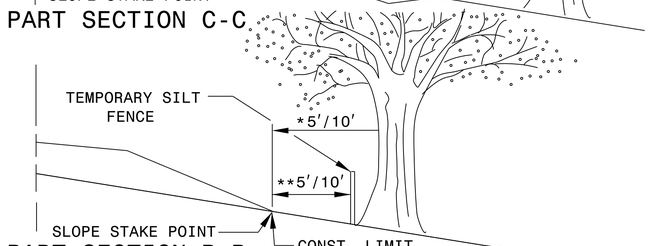

PART SECTION B-B

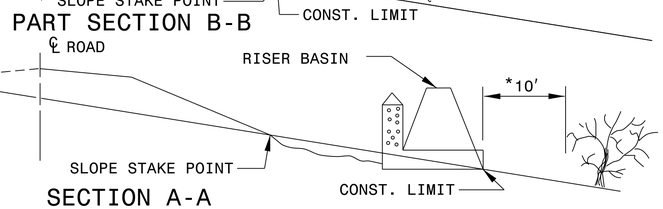

SECTION A-A

STATE OF
NORTH CAROLINA
DEPT. OF TRANSPORTATION
DIVISION OF HIGHWAYS
RALEIGH, N.C.

ENGLISH DETAIL DRAWING FOR

METHOD OF CLEARING

MODIFIED METHOD - III

SHEET 1 OF 1

200D03

NORTH CAROLINA PROFESSIONAL SEAL 022966 ENGINEER Joel S. Howerton

CONTRACT STANDARDS AND DEVELOPMENT UNIT
Office 919-707-6950 FAX 919-250-4119

SEE TITLE BLOCK

ORIGINAL BY:	T.S.S.	DATE:	FEB.2000
MODIFIED BY:	K.A.K.	DATE:	AUG.2016
CHECKED BY:		DATE:	
FILE SPEC.:	kkempf/english/0200d301.dgn		

DOCUMENT NOT CONSIDERED FINAL UNLESS ALL SIGNATURES COMPLETED

05-DEC-2017 09:31
S:\Contracts\Special Details\kkempf\english\0200D301_modified method III CandG.dgn
jhowerton
AT CSD-292695

5/9/06

COMPUTED BY: JMH DATE: 11/30/17
CHECKED BY: _____ DATE: _____

DIVISION OF HIGHWAYS
STATE OF NORTH CAROLINA

PROJECT REFERENCE NO.	SHEET NO.
W-5601GA	3B-1

DOCUMENT NOT CONSIDERED FINAL UNLESS ALL SIGNATURES COMPLETED

SUMMARY OF EARTHWORK

IN CUBIC YARDS

CHAIN	BEGINNING STATION	ENDING STATION	UNCL. EXCA. C.Y.	UNDERCUT C.Y.	EMBANK. +% C.Y.	BORROW C.Y.	WASTE C.Y.
SUMMARY 1							
-L_LT-	12+2	50+8	1,980		2,877	897	
SUBTOTAL			1,980		2,877	897	
SHEET TOTALS			1,980		2,877	897	
MATERIAL FOR SHOULDER CONSTRUCTION					281	281	
CONTINGENCY UNDERCUT FOR SUBGRADE STABILITY				100			
ADDITIONAL UNDERCUT CONTINGENCY				200			
PROJECT TOTAL			1,980	300	3,158	1,178	
EST. 5% TO REPLACE TOP SOIL ON BORROW PIT						59	
GRAND TOTAL			1,980			1,237	
SAY			2,000			1,300	

SUMMARY OF PAVEMENT REMOVAL

IN SQUARE YARDS

LINE	STATION	STATION	LOCATION	LENGTH OR AREA	WIDTH	SQUARE YARDS
-L-	12+22	17+78		5737.17		637.46
-L-	18+58	18+99		184.43		20.49
-L-	44+69	49+01		7071.54		785.73
-L-	49+81	50+81		388.96		43.22
					SAY	1,490

RK&K
P: (919) 878-9560
8601 Six Forks Road, Forum 1,Suite 700
Raleigh, North Carolina 27615-3960
NC License No. F-0112
Engineers | Construction Managers | Planners | Scientists
www.rkk.com
Responsive People | Creative Solutions

10/19/2021
H:\Roadway\Proj\W-5601GA_Rdy_psh03B-1.dgn
dhelms

COMPUTED BY: AMK DATE: 8/5/2021

CHECKED BY: CAH DATE: 8/6/2021

NORTH CAROLINA DEPARTMENT OF TRANSPORTATION
DIVISION OF HIGHWAYS

PROJECT REFERENCE NO.	SHEET NO.
W-5601GA	3D-1

Note: Invert Elevations indicated are for Bid Purposes only and shall not be used for project construction stakeout. See "Standard Specifications for Roads and Structures, Section 300-5."

LIST OF PIPES, ENDWALLS, ETC. (FOR PIPES 48" & UNDER)

| LINE & STATION | OFFSET | | STRUCTURE NO. FROM | STRUCTURE NO. TO | TOP ELEVATION | INVERT ELEVATION | INVERT ELEVATION | % MINIMUM REQUIRED SLOPE | DRAINAGE PIPE (RCP, CSP, CAAP, HDPE, or PVC) SIZE | 12" | 15" | 18" | 24" | 30" | 36" | 42" | 48" | DO NOT USE RCP | DO NOT USE CSP | DO NOT USE CAAP | DO NOT USE HDPE, PP, OR PVC | R.C. PIPE CLASS IV SIZE | 12" | 15" | 18" | 24" | 30" | 36" | 42" | 48" | PIPE AS NOTED | ENDWALLS STD. 838.01 OR STD. 838.11 (UNLESS NOTED OTHERWISE) CU. YARDS | R.C.P. | C.S.P. | QUANTITIES FOR DRAINAGE STRUCTURES "TOTAL L.F. FOR PAY QUANTITY SHALL BE COL. 'A' + (1.3 X COL. 'B')" | PER EACH (0' THRU 5.0') | LIN. FT. A: 5.0' THRU 10.0' | LIN. FT. B: 10.0' AND ABOVE | C.B. STD. 840.01 OR STD. 840.02 | FRAME, GRATES, AND HOOD STANDARD 840.03 TYPE OF GRATE E | F | G | CONCRETE TRANSITIONAL SECTION DROP INLET | CATCH BASIN | D.I. STD. 840.14 OR STD. 840.15 | D.I. FRAME AND GRATE STD. 840.16 | G.D.I. TYPE "A" STD. 840.17 OR 840.26 | G.D.I. TYPE "B" STD. 840.18 OR 840.27 | G.D.I. TYPE "D" STD. 840.19 OR 840.28 | G.D.I. FRAME WITH TWO FLAT GRATES STD. 840.20 | G.D.I. FRAME WITH TWO GRATES STD. 840.22 | G.D.I. (N.S.) FRAME WITH TWO GRATES STD. 840.24 | G.D.I. (N.S.) FR. WITH TWO FLAT GRATES. STD. 840.29 | DRIVEWAY DROP INLET LIN. FT. STD. 840.30 | D.I. IN APPROACH SLAB STD. 840.13 | J.B. STD. 840.31 OR 840.32 | TBJB STD. 840.34 | T.B.D.I. STD. 840.35 | STEEL GRATE AND FRAME STD. 840.37 | M.H. FRAME AND COVER STD. 840.54 | ADJUST MH | ADJUST CB | ADJUST DI | CONV DI TO JBMH | CONV JB TO DI | CONV CB TO JB | BERM DRAINAGE OUTLET | OTCB | FLOWABLE FILL (C.Y.) | DRAINAGE PIPE ELBOWS NO. & SIZE | CONC. & BRICK PIPE PLUG, C.Y. STD. 840.71 | CONC. COLLARS CL. "B" C.Y. STD. 840.72 | PIPE REMOVAL LIN. FT. | REMARKS |
|---|---|---

COMPUTED BY: Tyler C. Bottoms DATE: 9/27/21
CHECKED BY: Thein Tun Zan DATE: 09-27-2021

PROJECT REFERENCE NO.	SHEET NO.
W-5601GA	3G-1

8/17/99

(5-15-18)
STATE OF NORTH CAROLINA
DIVISION OF HIGHWAYS

SUMMARY OF SUBSURFACE DRAINAGE

LINE	Station	Station	Location LT/RT/CL	Drain Type* UD/BD/SD	LF
CONTINGENCY				SD	1000
				TOTAL LF:	1000

*UD = Underdrain
*BD = Blind Drain
*SD = Subsurface Drain

SUMMARY OF AGGREGATE SUBGRADE/STABILIZATION

LINE	Station	Station	Aggregate Type* ASU(1/2)/ AST	Aggregate Thickness INCHES [8" for ASU(2)]	Shallow Undercut CY	Class IV Subgrade Stabilization TONS	Geotextile for Soil Stabilization SY	Stabilizer Aggregate TONS	Class IV Aggregate Stabilization TONS
-L-	40+00	46+00	ASU (1)	12	360	680	1100		
CONTINGENCY			ASU (1)	12	100	190	300		
			TOTAL CY/TONS/SY:		460	870**	1400**	0	0

*ASU(1/2) = Aggregate Subgrade (Type 1 or 2)
*AST = Aggregate Stabilization
**Total tons of "Class IV Subgrade Stabilization" and total square yards of "Geotextile for Soil Stabilization" are only the estimated quantities for ASU(1/2)/AST and may only represent a portion of the subgrade stabilization and geotextile quantities shown in the Item Sheets of the Proposal.

RK&K
P: (919) 878-9560
8601 Six Forks Road, Forum 1,Suite 700
Raleigh, North Carolina 27615-3960
NC License No. F-0112
Engineers | Construction Managers | Planners | Scientists
www.rkk.com
Responsive People | Creative Solutions

10/19/2021
R:\Roadway\Proj\W-5601GA_Rdy_psh3G-1.dgn

6/2/99

PROJECT REFERENCE NO.	SHEET NO.
W-5601GA	4

ROADWAY DESIGN ENGINEER

NORTH CAROLINA PROFESSIONAL SEAL 042161 ENGINEER SCOTT D. BLEVINS

Scott D. Blevins

11/17/2021

HYDRAULICS ENGINEER

NORTH CAROLINA PROFESSIONAL SEAL 039268 ENGINEER PORTLAND A. HOFFMAN

Portland A. Hoffman

11/17/2021

DOCUMENT NOT CONSIDERED FINAL UNLESS ALL SIGNATURES COMPLETED

DETAIL A
MEDIAN V DITCH
(Not to Scale)

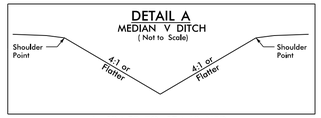

-L- 13+50 TO 17+40 MED
-L- 19+00 TO 34+00 MED

NSRS 2011

BEGIN TIP PROJECT W-5601GA
-L- POT Sta.12+22.00=
-L_RT- POT Sta.12+22.00 (42' RT)
-L_LT- POT Sta.12+22.00 (42' LT)

★ PROPOSED SIGNAL

PAVEMENT REMOVAL

FOR -L LT- & -L RT- PROFILES SEE SHT. 7

RK&K
P: (919) 878-9560
8601 Six Forks Road, Forum 1,Suite 700
Raleigh, North Carolina 27615-3960
NC License No. F-0112
Engineers | Construction Managers | Planners | Scientists
www.rkk.com
Responsive People | Creative Solutions

11/17/2021
R:\Roadway\Proj\W-5601GA_Rdy_psh04.dgn
dhefner

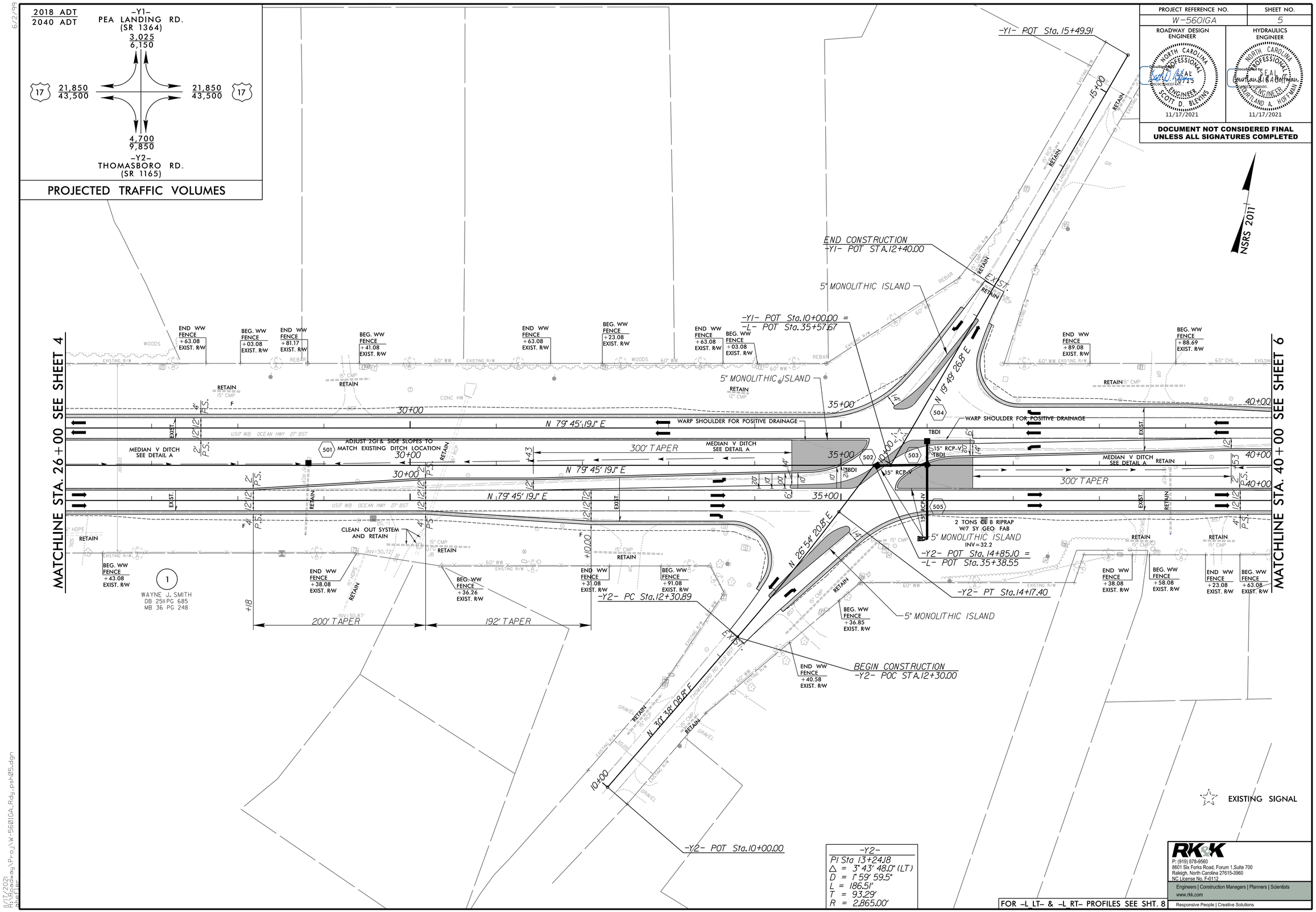

2018 ADT
2040 ADT
-Y1-
PEA LANDING RD.
(SR 1364)
3,025
6,150
17
21,850
43,500
21,850
43,500
17
4,700
9,850
-Y2-
THOMASBORO RD.
(SR 1165)
PROJECTED TRAFFIC VOLUMES
PROJECT REFERENCE NO.
W-5601GA
SHEET NO.
5
ROADWAY DESIGN ENGINEER
HYDRAULICS ENGINEER
11/17/2021
11/17/2021
DOCUMENT NOT CONSIDERED FINAL UNLESS ALL SIGNATURES COMPLETED
NSRS 2011
-Y1- POT Sta. 15+49.91
END CONSTRUCTION
-Y1- POT STA.12+40.00
5" MONOLITHIC ISLAND
-Y1- POT Sta.10+00.00 =
-L- POT Sta.35+57.67
MATCHLINE STA. 26+00 SEE SHEET 4
MATCHLINE STA. 40+00 SEE SHEET 6
N 79° 45' 19.1" E
WARP SHOULDER FOR POSITIVE DRAINAGE
ADJUST 2GI & SIDE SLOPES TO MATCH EXISTING DITCH LOCATION
MEDIAN V DITCH SEE DETAIL A
300' TAPER
N 19° 49' 26.8" E
N 26° 54' 20.8" E
N 30° 38' 08.8" E
2 TONS CL B RIPRAP W/7 SY GEO FAB
INV=32.2
-Y2- POT Sta. 14+85.10 =
-L- POT Sta.35+38.55
-Y2- PT Sta.14+17.40
-Y2- PC Sta.12+30.89
BEGIN CONSTRUCTION
-Y2- POC STA.12+30.00
-Y2- POT Sta.10+00.00
CLEAN OUT SYSTEM AND RETAIN
WAYNE J. SMITH
DB 2511 PG 685
MB 36 PG 248
200' TAPER
192' TAPER
EXISTING SIGNAL
-Y2-
PI Sta 13+24.18
Δ = 3° 43' 48.0" (LT)
D = 1° 59' 59.5"
L = 186.51'
T = 93.29'
R = 2,865.00'
FOR -L LT- & -L RT- PROFILES SEE SHT. 8
RK&K
P: (919) 878-9560
8601 Six Forks Road, Forum 1,Suite 700
Raleigh, North Carolina 27615-3960
NC License No. F-0112
Engineers | Construction Managers | Planners | Scientists
www.rkk.com
Responsive People | Creative Solutions

PROJECT REFERENCE NO.	SHEET NO.
W-5601GA	6

ROADWAY DESIGN ENGINEER	HYDRAULICS ENGINEER
NORTH CAROLINA PROFESSIONAL SEAL ENGINEER SCOTT D. BLEVINS	NORTH CAROLINA PROFESSIONAL SEAL ENGINEER COURTLAND A. HOFFMAN
11/17/2021	11/17/2021

DOCUMENT NOT CONSIDERED FINAL UNLESS ALL SIGNATURES COMPLETED

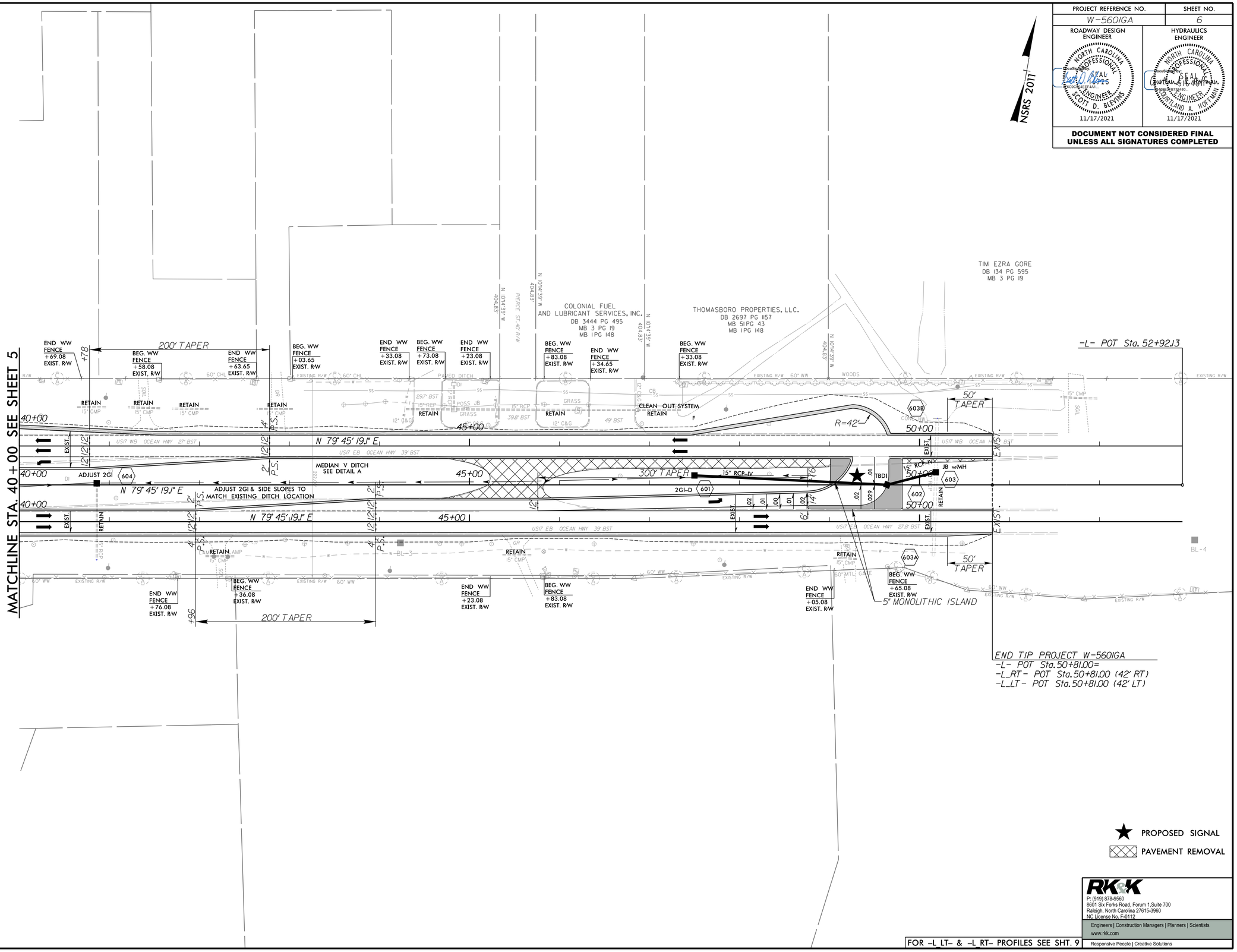

FOR -L_LT- & -L_RT- PROFILES SEE SHT. 9

RK&K
P: (919) 878-9560
8601 Six Forks Road, Forum 1,Suite 700
Raleigh, North Carolina 27615-3960
NC License No. F-0112
Engineers | Construction Managers | Planners | Scientists
www.rkk.com
Responsive People | Creative Solutions

6/2/99

11/17/2021
R:\Roadway\Proj\W-5601GA_Rdy_psh06.dgn

PROJECT REFERENCE NO.	SHEET NO.
W-5601GA	7

ROADWAY DESIGN ENGINEER
NORTH CAROLINA PROFESSIONAL SEAL ENGINEER SCOTT D. BLEVINS
Documented by: Scott D. Blevins
Date: 76C9DA04EF4A1...
11/17/2021

HYDRAULICS ENGINEER
NORTH CAROLINA PROFESSIONAL SEAL ENGINEER HOFFMAN
Documented by: Courtland A. Hoffman
Date: 76C9DA04EF4A1...
11/17/2021

DOCUMENT NOT CONSIDERED FINAL UNLESS ALL SIGNATURES COMPLETED



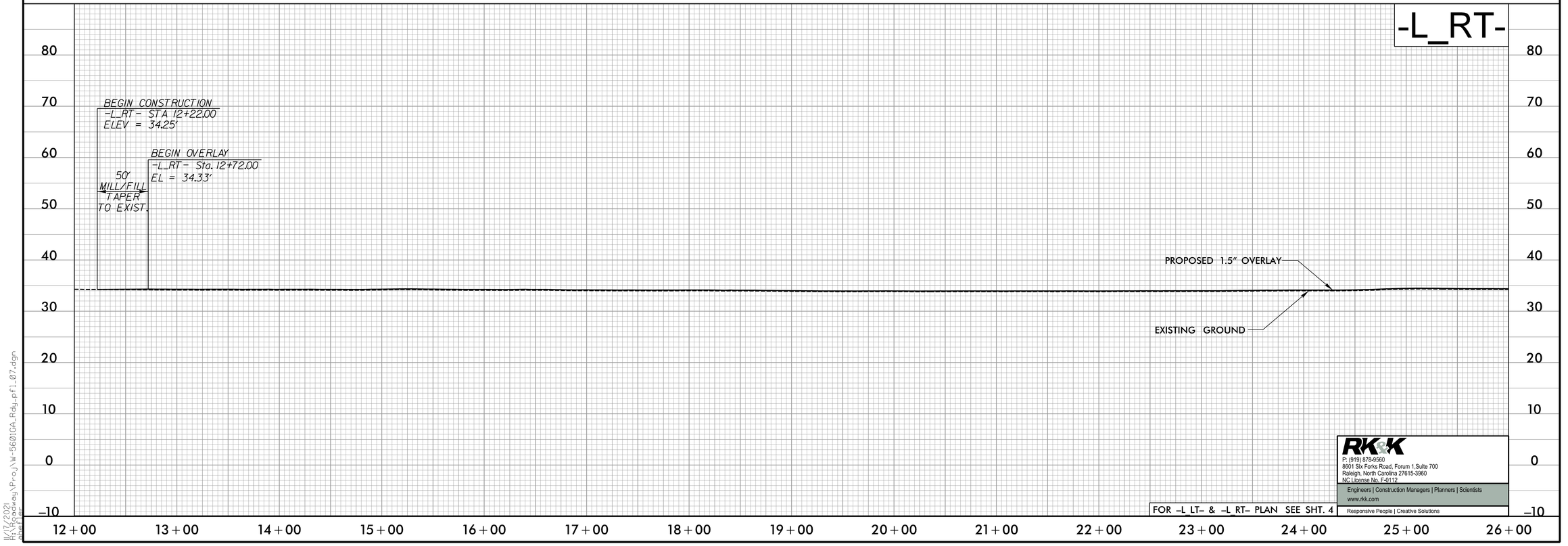

FOR -L_LT- & -L_RT- PLAN SEE SHT. 4

RK&K
P: (919) 878-9560
8601 Six Forks Road, Forum 1,Suite 700
Raleigh, North Carolina 27615-3960
NC License No. F-0112
Engineers | Construction Managers | Planners | Scientists
www.rkk.com
Responsive People | Creative Solutions

5/28/99

11/17/2021
R:\Roadway\Proj\W-5601GA_Rdy_pfl_07.dgn

PROJECT REFERENCE NO.	SHEET NO.
W-5601GA	8

ROADWAY DESIGN ENGINEER
NORTH CAROLINA PROFESSIONAL SEAL ENGINEER SCOTT D. BLEVINS
Docu Signed by: 6C9C404EEF4A1...
11/17/2021

HYDRAULICS ENGINEER
NORTH CAROLINA PROFESSIONAL SEAL ENGINEER COURTLAND A. HOFFMAN
Docu Signed by: Courtland A Hoffman
11/17/2021

DOCUMENT NOT CONSIDERED FINAL UNLESS ALL SIGNATURES COMPLETED

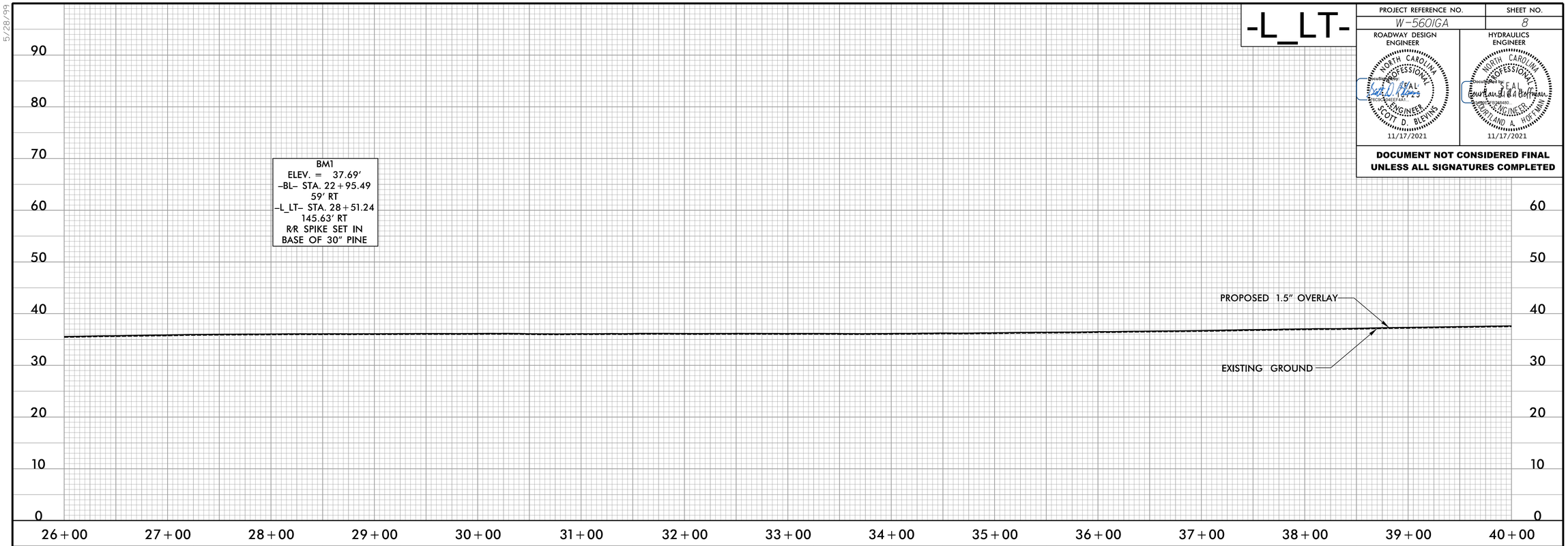

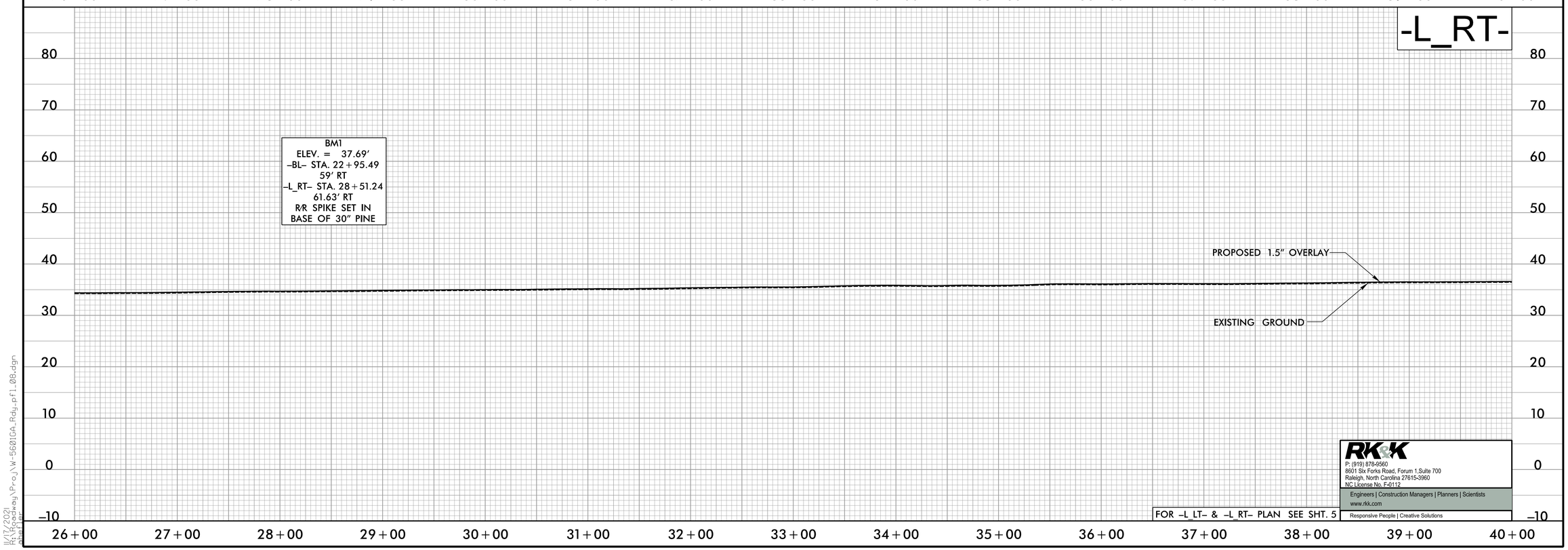

FOR -L_LT- & -L_RT- PLAN SEE SHT. 5

RK&K
P: (919) 878-9560
8601 Six Forks Road, Forum 1,Suite 700
Raleigh, North Carolina 27615-3960
NC License No. F-0112
Engineers | Construction Managers | Planners | Scientists
www.rkk.com
Responsive People | Creative Solutions

5/28/99

11/17/2021
R:\Roadway\Proj\W-5601GA_Rdy_pfl_08.dgn

PROJECT REFERENCE NO.	SHEET NO.
W-5601GA	9

ROADWAY DESIGN ENGINEER
NORTH CAROLINA PROFESSIONAL SEAL ENGINEER SCOTT D. BLEVINS
11/17/2021

HYDRAULICS ENGINEER
NORTH CAROLINA PROFESSIONAL SEAL ENGINEER COURTLAND A. HOFFMAN
11/17/2021

DOCUMENT NOT CONSIDERED FINAL UNLESS ALL SIGNATURES COMPLETED

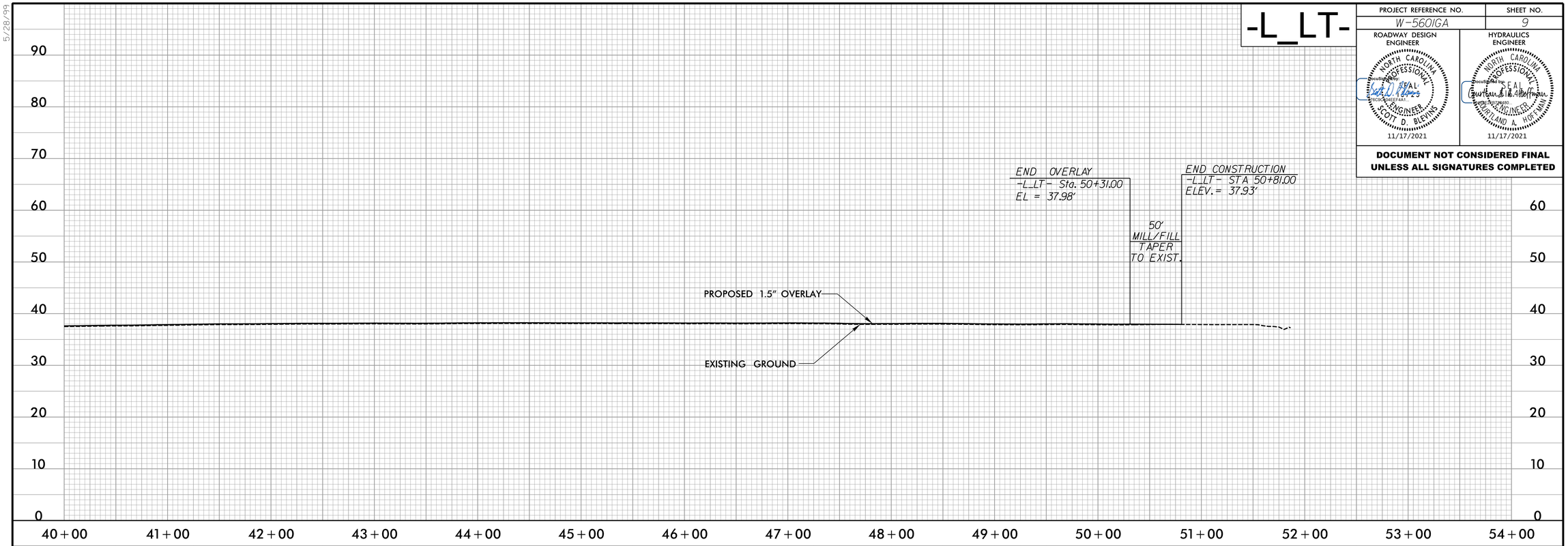

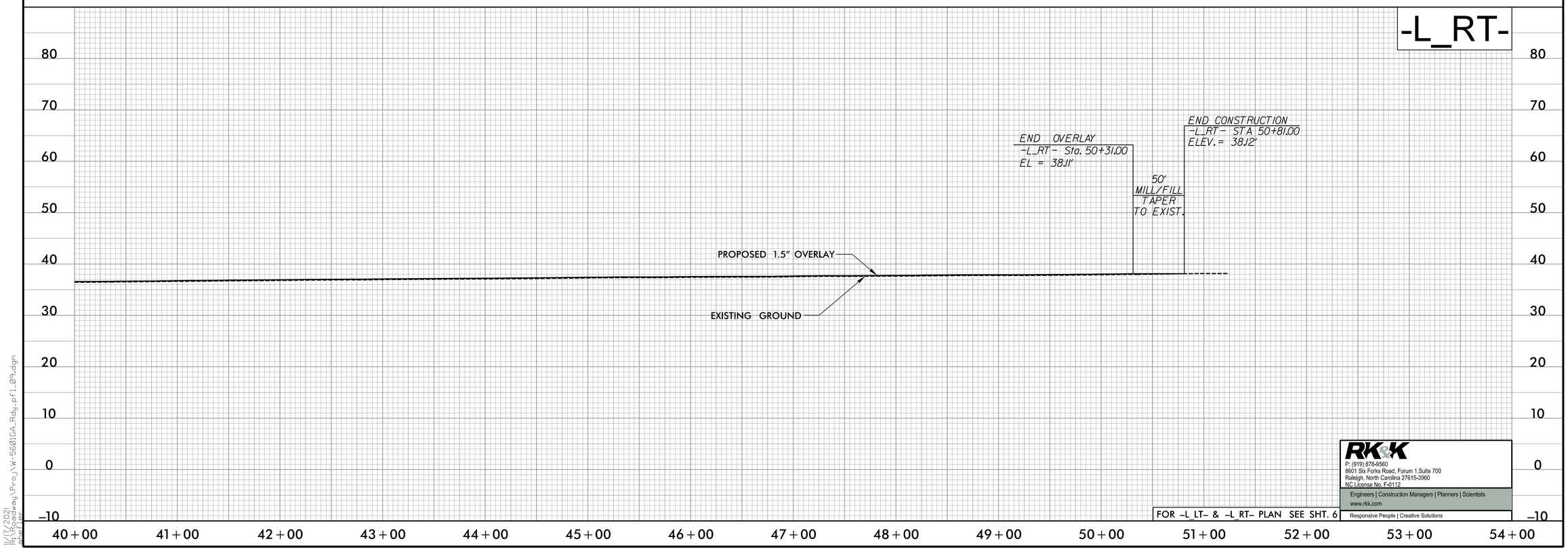

FOR -L_LT- & -L_RT- PLAN SEE SHT. 6

RK&K
P: (919) 878-9560
8601 Six Forks Road, Forum 1,Suite 700
Raleigh, North Carolina 27615-3960
NC License No. F-0112
Engineers | Construction Managers | Planners | Scientists
www.rkk.com
Responsive People | Creative Solutions

5/28/99

11/17/2021
R:\Roadway\Proj\W-5601GA_Rdy_pfl_09.dgn

PROJECT REFERENCE NO.	SHEET NO.
W-5601GA	RW02C-1

Location and Surveys

LOCATION AND SURVEYS
DIVISION 3
5310 BARBADOS BLVD. SUITE 102
CASTLE HAYNE, NORTH CAROLINA 28429

PROJECT SURVEYOR

NORTH CAROLINA PROFESSIONAL SEAL L-4526 LAND SURVEYOR CHRISTOPHER J. SAWYER

DOCUMENT NOT CONSIDERED FINAL UNLESS ALL SIGNATURES COMPLETED

SURVEY CONTROL SHEET

W/ EXISTING CENTERLINE ALIGNMENTS PRIOR TO CONSTRUCTION

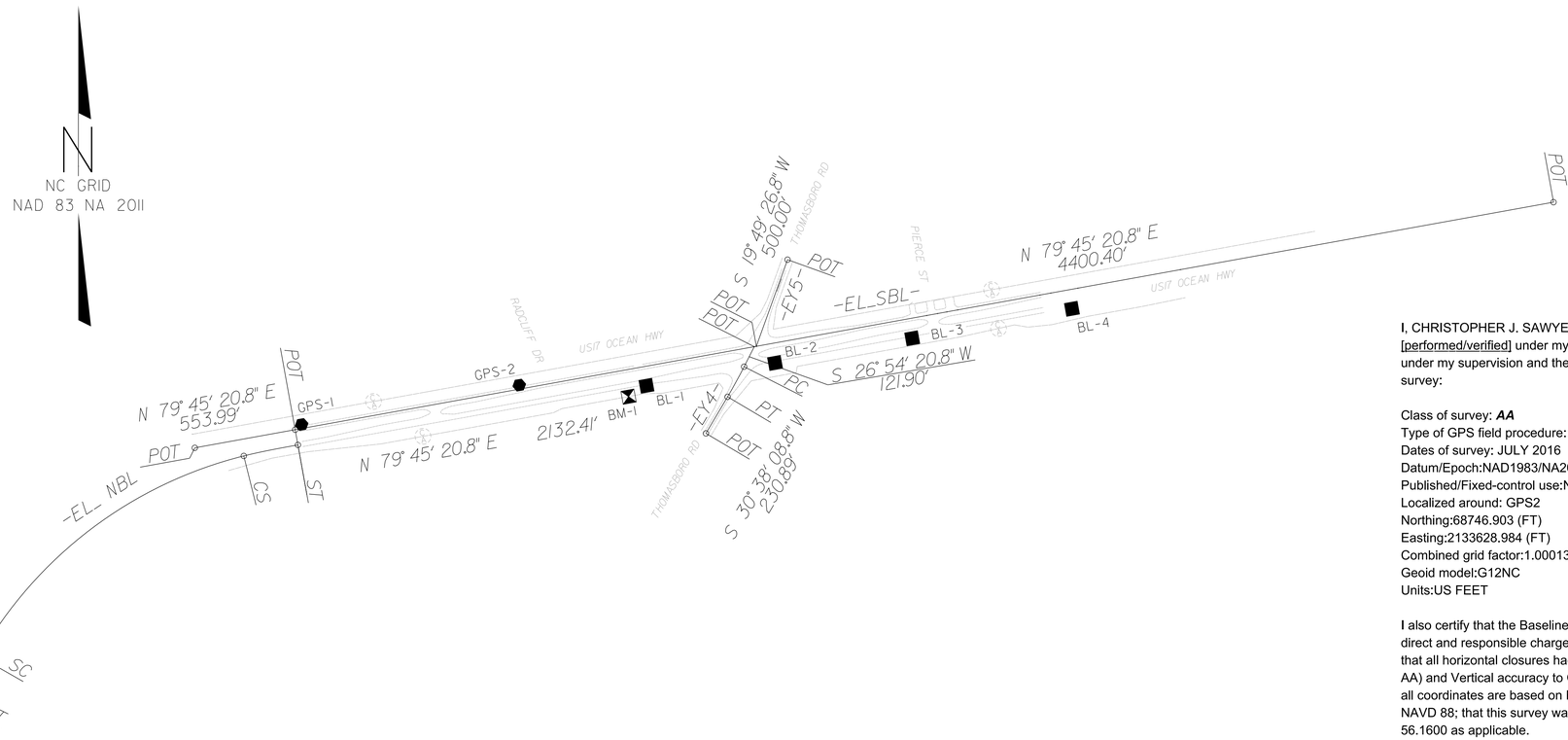

I, CHRISTOPHER J. SAWYER, PLS, certify that the Project Control was [performed/verified] under my supervision from an actual GPS survey made under my supervision and the following information was used to perform the survey:

Class of survey: ***AA***
Type of GPS field procedure: RTN
Dates of survey: JULY 2016
Datum/Epoch:NAD1983/NA2011
Published/Fixed-control use:N/A FOR RTN
Localized around: GPS2
Northing:68746.903 (FT)
Easting:2133628.984 (FT)
Combined grid factor:1.0001368100
Geoid model:G12NC
Units:US FEET

I also certify that the Baseline Control for this project was completed under my direct and responsible charge from an actual survey made under my supervision; that all horizontal closures had a minimum ratio of precision of 1:20,000 (Class AA) and Vertical accuracy to Class A. Field work was performed July 2016, and all coordinates are based on NAD 83/2011 and all elevations are based on NAVD 88; that this survey was performed to meet the requirements of 21NCAC 56.1600 as applicable.

This 5TH day of November, 2021.

DocuSigned by:
Christopher J. Sawyer
9700CB2E1D21467...
Professional Land Surveyor L-4526

BL

POINT	DESC.	NORTH	EAST	ELEVATION	BL STATION	OFFSET
GPS1	GPS CAP & REBAR	68533.0320	2132446.9180	34.24	5+00.00	0.00
GPS2	GPS CAP & REBAR	68746.9030	2133628.9840	33.47	17+01.26	0.00
BL1	TRV CAP & REBAR	68743.0500	2134319.9270	33.99	23+92.21	0.00
BL2	TRV CAP & REBAR	68867.2370	2135018.1020	35.09	31+01.35	0.00
BL3	TRV CAP & REBAR	69001.2670	2135763.1780	36.23	38+58.38	0.00
BL4	TRV CAP & REBAR	69161.4000	2136630.8350	37.34	47+40.69	0.00

****
BMI ELEVATION = 37.69
N = 68684 E = 2134223
BL STATION 22+95.49 59' RIGHT
R/R SPIKE SET IN BASE OF 30" PINE
****

NOTES:

1. PROJECT CONTROL WAS ESTABLISHED USING GNSS, THE GLOBAL NAVIGATION SATELLITE SYSTEM.

2. THE SURVEY CONTROL DATA FOR THIS PROJECT HAS BEEN COMPILED FROM VARIOUS SOURCES. IF FURTHER INFORMATION REGARDING PROJECT CONTROL IS NEEDED, PLEASE CONTACT THE LOCATION AND SURVEYS UNIT.

REVISIONS

6/2/99

05-NOV-2021 13:51
S:\Units\Div03\Projects\MISC-INTERSTATE\Misc\Brunswick\W5601 GA\Working\RW SHEETS\W5601GA_LS_RW02C-1.dgn
mjduval AT LS-299896

6/2/99

REVISIONS

SURVEY CONTROL SHEET

W/ EXISTING CENTERLINE ALIGNMENTS PRIOR TO CONSTRUCTION

PROJECT REFERENCE NO.	SHEET NO.
W-5601GA	RW02C-2

Location and Surveys

LOCATION AND SURVEYS
DIVISION 3
5310 BARBADOS BLVD. SUITE 102
CASTLE HAYNE, NORTH CAROLINA 28429

PROJECT SURVEYOR

NORTH CAROLINA PROFESSIONAL LAND SURVEYOR SEAL L-4526 CHRISTOPHER L. SAWYER
DocuSigned by:

11/5/2021

DOCUMENT NOT CONSIDERED FINAL UNLESS ALL SIGNATURES COMPLETED

EL_NBL

POINT	N	E	BEARING	DIST	DELTA	D	L	T	R	DELTA S	Ls	LT	ST
TS	0.000	0.000											
SPIRAL			N 27°10'36.7" E	299.94						03°45'00.0"(RT)	300.00	200.04	100.04
SC	67273.341	2130695.745											
CURVE			N 52°50'28.8" E	1803.08	46°19'44.0"(RT)	02°30'00.0"	1853.16	980.60	2291.83				
CS	68362.446	2132132.740											
SPIRAL			N 78°30'21.0" E	299.94						03°45'00.0"(RT)	300.00	200.04	100.04
ST	68362.446	2132132.740											

EL_SBL

POINT	N	E	BEARING	DIST
POT	68406.352	2131866.572		
LINE			N 79°45'20.8" E	553.99
POT	68504.876	2132411.731		
LINE			N 79°45'20.8" E	2534.21
POT	68955.571	2134905.542		
LINE			N 79°45'20.8" E	11.40
POT	68957.598	2134916.760		
LINE			N 79°45'20.8" E	4400.40
POT	69740.184	2139247.012		

EY4

POINT	N	E	BEARING	DIST	DELTA	D	L	T	R
POT	68955.571	2134905.542							
LINE			S 26°54'20.8" W	121.90					
PC	68846.866	2134850.379							
CURVE			S 28°46'14.8" W	186.47	03°43'48.0"(RT)	02°00'00.0"	186.50	93.28	2864.79
PT	68683.418	2134760.631							
LINE			S 30°38'08.8" W	230.89					
POT	68484.751	2134642.972							

EY5

POINT	N	E	BEARING	DIST
POT	69427.967	2135086.327		
LINE			S 19°49'26.8" W	500.00
POT	68957.598	2134916.760		

NOTES:

1. PROJECT CONTROL WAS ESTABLISHED USING GNSS, THE GLOBAL NAVIGATION SATELLITE SYSTEM.
2. THE SURVEY CONTROL DATA FOR THIS PROJECT HAS BEEN COMPILED FROM VARIOUS SOURCES. IF FURTHER INFORMATION REGARDING PROJECT CONTROL IS NEEDED, PLEASE CONTACT THE LOCATION AND SURVEYS UNIT.

04-NOV-2021 7:24
S:\Units\U03\Projects\MISC-INTERSTATE\Misc\Brunswick\W5601 GA\Working\RW SHEETS\W5601GA_LS_IC-1_211021.dgn
mjduval AT LS-299896

PROPOSED ALIGNMENT CONTROL SHEET

PROJECT REFERENCE NO.	SHEET NO.
W-5601GA	RW02D-1

Location and Surveys

LOCATION AND SURVEYS
DIVISION 3
5310 BARBADOS BLVD. SUITE 102
CASTLE HAYNE, NORTH CAROLINA 28429

PROJECT SURVEYOR

NORTH CAROLINA PROFESSIONAL SEAL L-4526 LAND SURVEYOR CHRISTOPHER J. SAWYER

DOCUMENT NOT CONSIDERED FINAL UNLESS ALL SIGNATURES COMPLETED

L

TYPE	STATION	NORTH	EAST
POT	10+00.00	68455.7546	2132382.9357
POT	52+92.13	69219.1210	2136606.6419

L_LT

TYPE	STATION	NORTH	EAST
POT	10+00.00	68498.2847	2132375.2491
POT	52+92.13	69261.6511	2136598.9552

L_RT

TYPE	STATION	NORTH	EAST
POT	10+00.00	68415.6239	2132390.1887
POT	52+92.13	69178.9903	2136613.8948

Y1

TYPE	STATION	NORTH	EAST
POT	10+00.00	68910.6430	2134899.8332
POT	15+49.91	69427.9671	2135086.3273

Y2

TYPE	STATION	NORTH	EAST
POT	10+00.00	68484.7506	2134642.9724
PC	12+30.89	68683.4120	2134760.6279
PT	14+17.40	68846.8721	2134850.3824
POT	14+86.63	68908.6064	2134881.7098

I, CHRISTOPHER J. SAWYER, PLS, certify that the data compiled came from available surveys/mapping performed by others and provided to me by NCDOT and do not certify to the accuracy or quality of the individual data sources.

This 5TH day of November, 2021.

DocuSigned by:
Christopher J. Sawyer
9700CB2E1D21467...

Professional Land Surveyor L-4526

NOTES:

1. PROJECT CONTROL WAS ESTABLISHED USING GNSS, THE GLOBAL NAVIGATION SATELLITE SYSTEM.

2. THE PROPOSED ALIGNMENT CONTROL DATA FOR THIS PROJECT HAS BEEN COMPILED FROM VARIOUS SOURCES. IF FURTHER INFORMATINO REGARDING PROJECT CONTROL IS NEEDED, PLEASE CONTACT THE LOCATION AND SURVEYS UNIT.

REVISIONS

6/2/99

05-NOV-2021 08:33
S:\Units\Div03\Projects\MISC-INTERSTATE\Misc\Brunswick\W5601 GA\Working\RW SHEETS\W5601GA_LS_RW02D-1.dgn
mjduval AT LS-299896

RIGHT OF WAY CONTROL SHEET

PROJECT REFERENCE NO.	SHEET NO.
W-5601GA	RW03E-1

Location and Surveys

LOCATION AND SURVEY
DIVISION 3
5310 BARBADOS BLVD, SUITE 102
CASTLE HAYNE, NORTH CAROLINA 28429

PROJECT SURVEYOR

NORTH CAROLINA PROFESSIONAL SEAL L-4526 LAND SURVEYOR CHRISTOPHER J. SAWYER

11/5/2021

DOCUMENT NOT CONSIDERED FINAL UNLESS ALL SIGNATURES COMPLETED

NO PERMANENT RIGHT OF WAY OR EASEMENTS WERE PURCHASED ON THIS PROJECT

REVISIONS

6/2/99

05-NOV-2021 13:46
S:\Units\Div03\Projects\MISC-INTERSTATE\Misc\Brunswick\W5601 GA\Working\RW SHEETS\W-5601GA_LS_RW03e-1.dgn
mjduval AT LS-299896

PROJECT REFERENCE NO.	SHEET NO.
W5601GA	RW04

Location and Surveys

LOCATION AND SURVEY
DIVISION 3
5310 BARBADOS BLVD, SUITE 102
CASTLE HAYNE, N.C. 28429

PROJECT SURVEYOR

NORTH CAROLINA PROFESSIONAL SEAL L-4526 LAND SURVEYOR CHRISTOPHER J. SAWYER

11/5/2021

DOCUMENT NOT CONSIDERED FINAL UNLESS ALL SIGNATURES COMPLETED

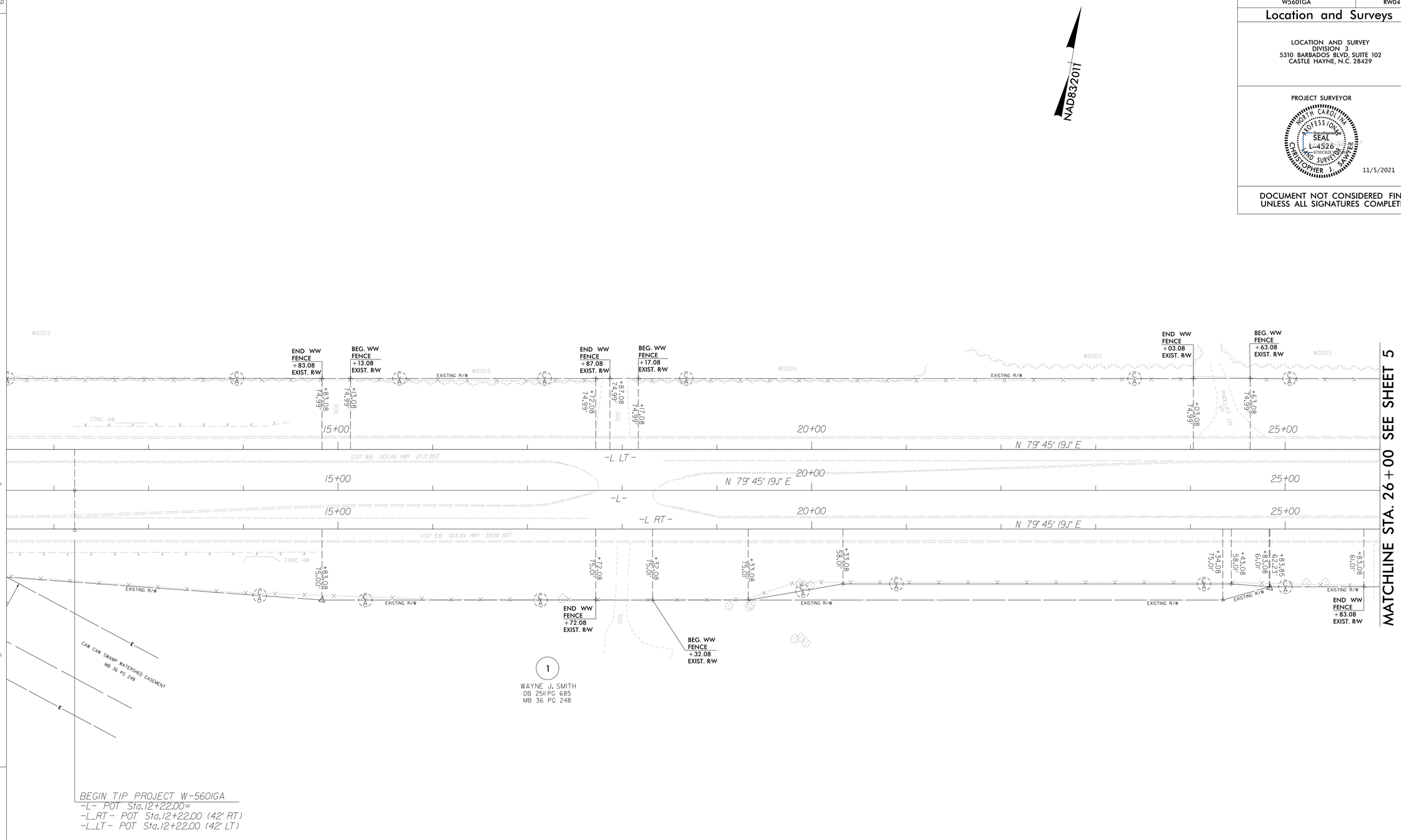

NOTES:

1. IF FURTHER INFORMATION REGARDING PROJECT CONTROL IS NEEDED PLEASE CONTACT THE LOCATION AND SURVEYS UNIT.
2. PROJECT CONTROL WAS ESTABLISHED USING GNSS, THE GLOBAL NAVIGATION SATELLITE SYSTEM.
3. RIGHT OF WAY MONUMENTATION ESTABLISHED _____ TO _____ .

REVISIONS

6/2/99

05-NOV-2021 13:33
S:\Units\Div03\Projects\MISC-INTERSTATE\Misc\Brunswick\W5601 GA\Working\RW SHEETS\W-5601GA_LS_RW04_211104.dgn
mjduval AT LS-299896

PROJECT REFERENCE NO.	SHEET NO.
W5601GA	RW05

Location and Surveys

LOCATION AND SURVEYS
DIVISION 3
5310 BARBADOS BLVD., SUITE 102
CASTLE HAYNE, N.C. 28429

PROJECT SURVEYOR

NORTH CAROLINA PROFESSIONAL SEAL L-4526 LAND SURVEYOR CHRISTOPHER J. SAWYER

11/5/2021

DOCUMENT NOT CONSIDERED FINAL UNLESS ALL SIGNATURES COMPLETED

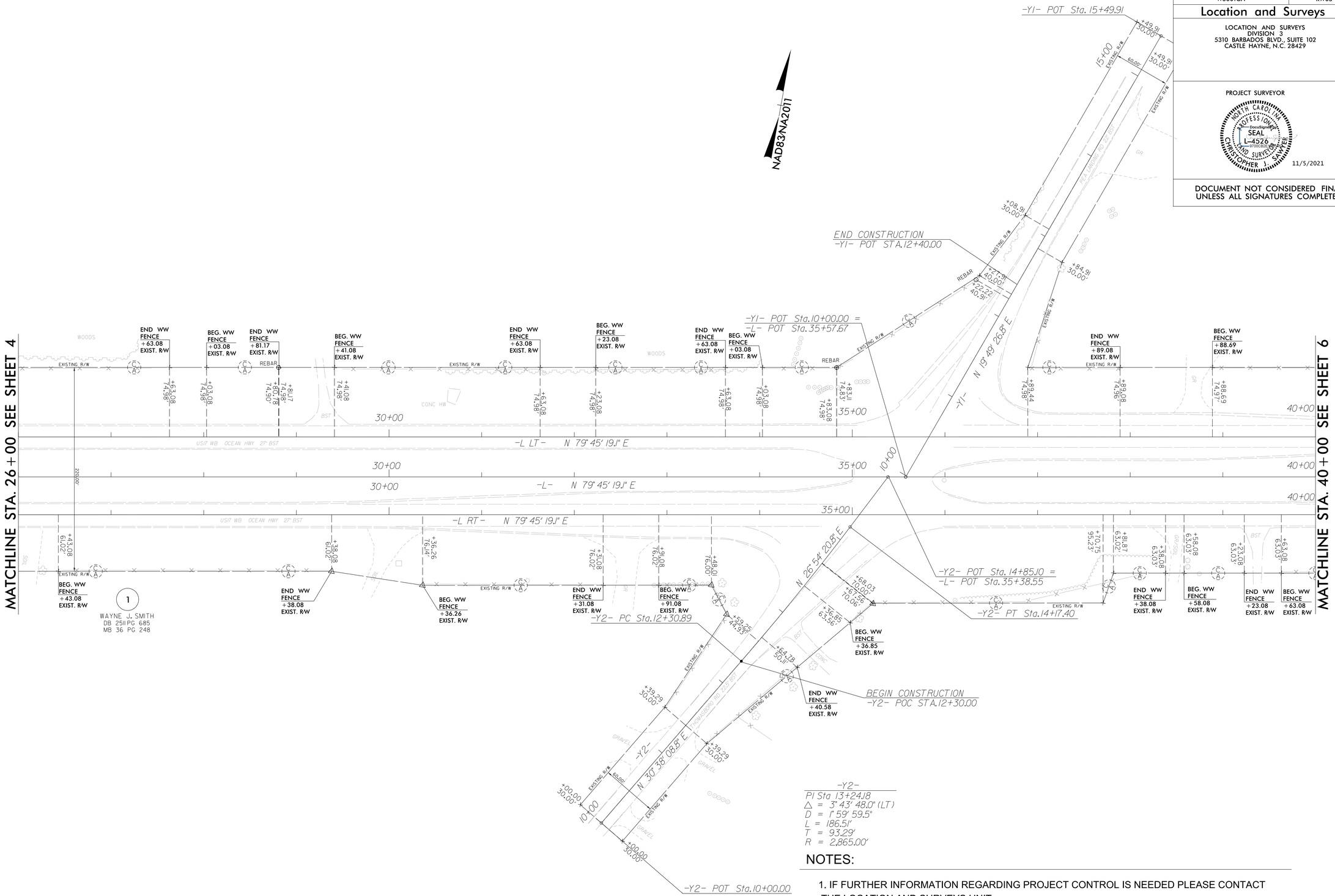

-Y2-
PI Sta 13+24.18
△ = 3° 43' 48.0" (LT)
D = 1° 59' 59.5"
L = 186.51'
T = 93.29'
R = 2,865.00'

NOTES:

1. IF FURTHER INFORMATION REGARDING PROJECT CONTROL IS NEEDED PLEASE CONTACT THE LOCATION AND SURVEYS UNIT.
2. PROJECT CONTROL WAS ESTABLISHED USING GNSS, THE GLOBAL NAVIGATION SATELLITE SYSTEM.
3. RIGHT OF WAY MONUMENTATION ESTABLISHED _____ TO _____ .

REVISIONS

6/2/99

05-NOV-2021 13:38
S:\Units\Div03\Projects\MISC-INTERSTATE\Misc\Brunswick\W5601 GA\Working\RW SHEETS\W-5601GA_LS_RW05_211104.dgn
mjduvel AT LS-299896

PROJECT REFERENCE NO.	SHEET NO.
W5601GA	RW06

Location and Surveys

LOCATION AND SURVEYS
DIVISION 3
5310 BARBADOS BLVD., SUITE 102
CASTLE HAYNE, N.C. 28429

PROJECT SURVEYOR

NORTH CAROLINA PROFESSIONAL SEAL L-4526 LAND SURVEYOR CHRISTOPHER J. SAWYER

11/5/2021

DOCUMENT NOT CONSIDERED FINAL UNLESS ALL SIGNATURES COMPLETED

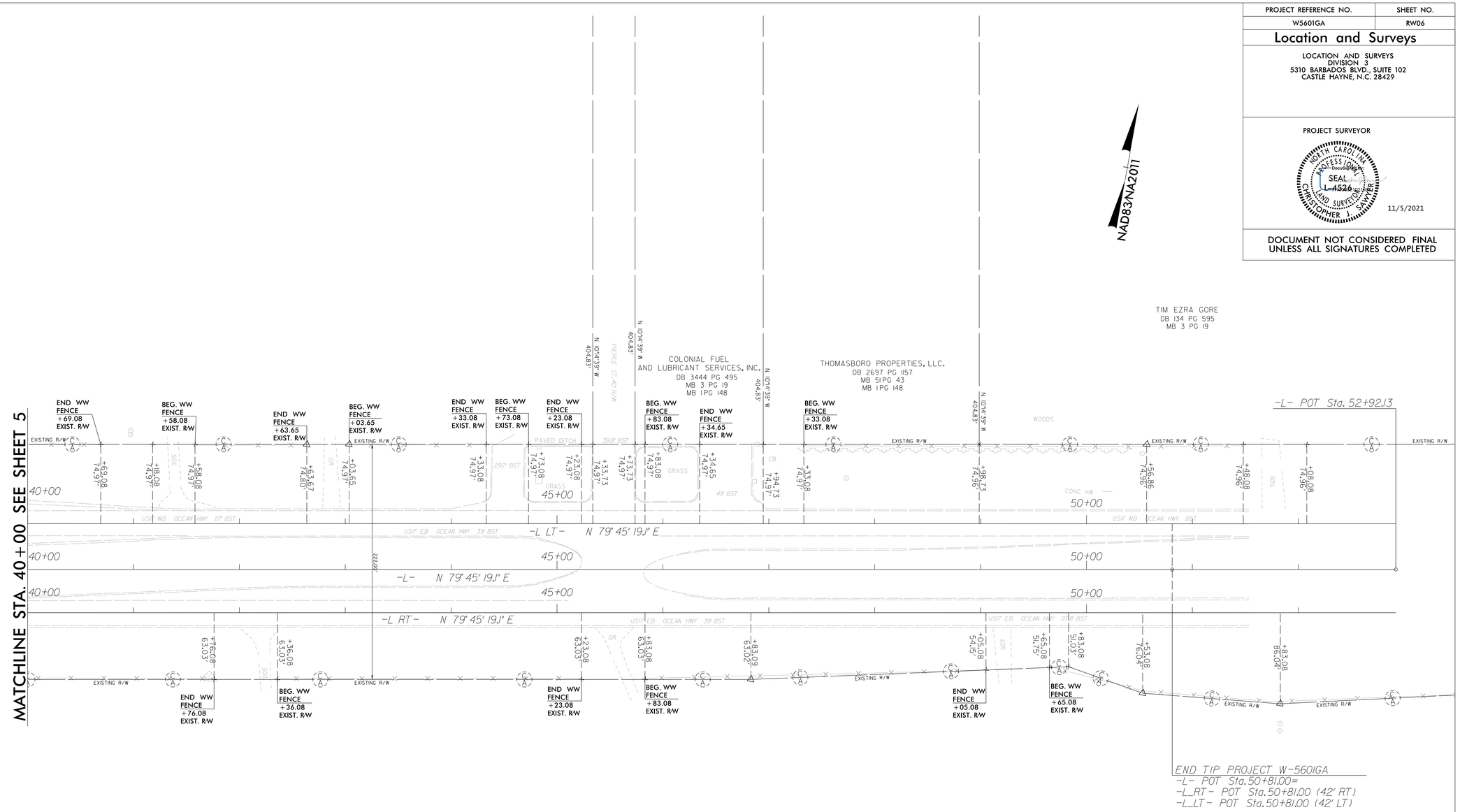

NOTES:

1. IF FURTHER INFORMATION REGARDING PROJECT CONTROL IS NEEDED PLEASE CONTACT THE LOCATION AND SURVEYS UNIT.
2. PROJECT CONTROL WAS ESTABLISHED USING GNSS, THE GLOBAL NAVIGATION SATELLITE SYSTEM.
3. RIGHT OF WAY MONUMENTATION ESTABLISHED _____ TO _____ .

REVISIONS

6/2/99

05-NOV-2021 13:55
S:\Units\Div03\Projects\MISC-INTERSTATE\Misc\Brunswick\W5601 GA\Working\RW SHEETS\W-5601GA_LS_RW06_211104.dgn
mjduval AT LS-299896

STATE OF NORTH CAROLINA
DIVISION OF HIGHWAYS

TRANSPORTATION MANAGEMENT PLAN

BRUNSWICK COUNTY



VICINITY MAP

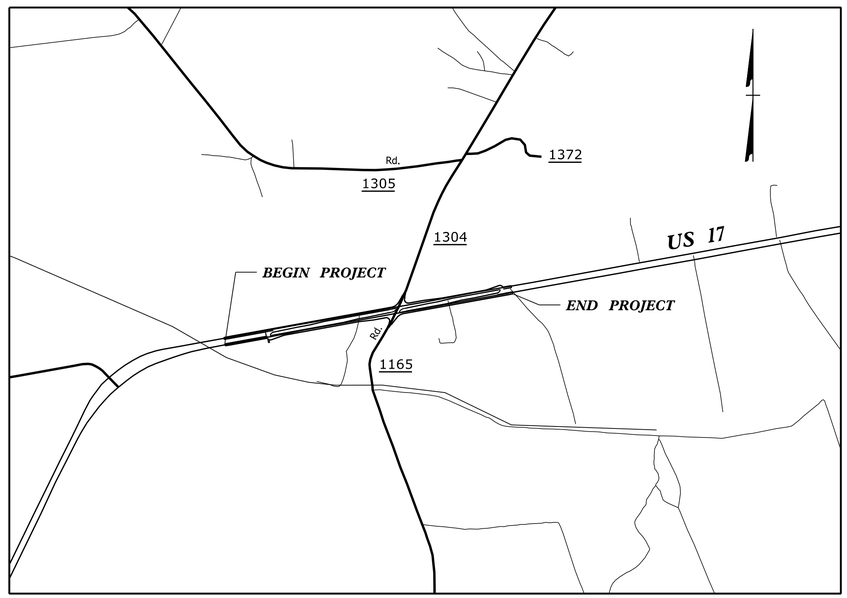

INDEX OF SHEETS

SHEET NO.	TITLE
TMP-1	TITLE SHEET, VICINITY MAP, AND INDEX OF SHEETS
TMP-1A	LIST OF APPLICABLE ROADWAY STANDARD DRAWINGS, LEGEND, PAVEMENT MARKING SCHEDULE
TMP-2 AND 2A	TRANSPORTATION OPERATIONS PLAN: (GENERAL NOTES)
TMP-3	TEMPORARY TRAFFIC CONTROL PHASING
TMP-4 THRU 6	PHASE I DETAILS
TMP-7 THRU 9	PHASE II DETAILS
TMP-10 AND 11	PHASE III DETAILS

SHEET NO.
TMP-1

CONTRACT: DC00326

TIP PROJECT: W-5601GA



WORK ZONE SAFETY & MOBILITY
"from the MOUNTAINS to the COAST"

PLANS PREPARED BY:

BYRON HOLDEN, PE
PROJECT MANAGER

KEVIN BISBY, PE
SENIOR PROJECT ENGINEER

NCDOT CONTACTS:

DAVID B. LEONARD, PE
DDC ENGINEER – DIVISION 3

DIVISION OF HIGHWAYS
STATE OF NORTH CAROLINA
DEPARTMENT OF TRANSPORTATION
WORK ZONE TRAFFIC CONTROL

DOCUMENT NOT CONSIDERED FINAL UNLESS ALL SIGNATURES COMPLETED

RK&K
P: (919) 878-9560
8601 Six Forks Road, Forum 1,Suite 700
Raleigh, North Carolina 27615-3960
NC License No. F-0112
Engineers | Construction Managers | Planners | Scientists
www.rkk.com
Responsive People | Creative Solutions

APPROVED: DocuSigned by: Kevin Bisby BDDB02262691247... *DATE:* 11/16/2021

SEAL

NORTH CAROLINA PROFESSIONAL SEAL 21047 ENGINEER KEVIN W. BISBY

11/16/2021
W5601GA_TMP_PSH01.dgn
kbisby

PROJ. REFERENCE NO.	SHEET NO.
W-5601GA	TMP-1A

RK&K
P: (919) 878-9560
8601 Six Forks Road, Forum 1,Suite 700
Raleigh, North Carolina 27615-3960
NC License No. F-0112
Engineers | Construction Managers | Planners | Scientists
www.rkk.com
Responsive People | Creative Solutions

ROADWAY STANDARD DRAWINGS

THE FOLLOWING ROADWAY STANDARDS AS SHOWN IN "ROADWAY STANDARD DRAWINGS" - N.C. DEPARTMENT OF TRANSPORTATION - RALEIGH, N.C., DATED JANUARY 2018 ARE APPLICABLE TO THIS PROJECT AND BY REFERENCE HEREBY ARE CONSIDERED A PART OF THESE PLANS:

STD. NO.	TITLE
1101.01	WORK ZONE ADVANCE WARNING SIGNS
1101.02	TEMPORARY LANE CLOSURES
1101.04	TEMPORARY SHOULDER CLOSURES
1101.05	WORK ZONE VEHICLE ACCESSES
1101.11	TRAFFIC CONTROL DESIGN TABLES
1110.01	STATIONARY WORK ZONE SIGNS
1110.02	PORTABLE WORK ZONE SIGNS
1115.01	FLASHING ARROW BOARDS
1130.01	DRUM
1135.01	CONES
1145.01	BARRICADES
1150.01	FLAGGING DEVICES
1180.01	SKINNY-DRUM
1205.01	PAVEMENT MARKINGS - LINE TYPES AND OFFSETS
1205.02	PAVEMENT MARKINGS - TWO-LANE AND MULTI-LANE ROADWAYS
1205.04	PAVEMENT MARKINGS - INTERSECTIONS
1205.05	PAVEMENT MARKINGS - TURN LANES
1205.08	PAVEMENT MARKINGS - SYMBOLS AND WORD MESSAGES
1205.09	PAVEMENT MARKINGS - PAINTED ISLANDS
1205.15	PAVEMENT MARKINGS - SUPERSTREETS
1250.01	RAISED PAVEMENT MARKERS - INSTALLATION SPACING
1251.01	RAISED PAVEMENT MARKERS - PERMANENT AND TEMPORARY
1261.01	GUARDRAIL AND BARRIER DELINEATORS - INSTALLATION SPACING
1261.02	GUARDRAIL AND BARRIER DELINEATORS - TYPES AND MOUNTING
1262.01	GUARDRAIL END DELINEATION

LEGEND

GENERAL

- DIRECTION OF TRAFFIC FLOW
- DIRECTION OF PEDESTRIAN TRAFFIC FLOW
- EXIST. PVMT.
- NORTH ARROW
- PROPOSED PVMT.
- TEMP. SHORING (LOCATION PURPOSES ONLY)
- WORK AREA
- REMOVAL

TRAFFIC CONTROL DEVICES

- BARRICADE (TYPE III)
- CONE
- DRUM / SKINNY DRUM / TUBULAR MARKER
- TEMPORARY CRASH CUSHION
- FLASHING ARROW BOARD
- FLAGGER
- LAW ENFORCEMENT
- TRUCK MOUNTED ATTENUATOR (TMA)
- CHANGEABLE MESSAGE SIGN

TEMPORARY SIGNING

- PORTABLE SIGN
- STATIONARY SIGN
- STATIONARY OR PORTABLE SIGN

SIGNALS

EXISTING / PROPOSED / TEMPORARY (TEMP)

PAVEMENT MARKINGS

- EXISTING LINES
- TEMPORARY LINES

TEMPORARY PAVEMENT MARKING SCHEDULE

PAINT		TEMPORARY RAISED PAVEMENT MARKERS	
Symbol	Description	Symbol	Description
P1	WHITE EDGELINE (4")	MI	CRYSTAL RED
P10	YELLOW EDGELINE (4")		
P13	YELLOW DOUBLE CENTER (4")		
P20	WHITE EDGELINE (6")		
P21	WHITE SOLID LANE LINE (6")		
P23	3 FT. - 9 FT./SP WHITE MINISKIP (6")		
P24	2 FT. - 6 FT./SP WHITE MINISKIP (6")		
P30	YELLOW EDGELINE (6")		
P50	WHITE GORELINE (12")		
P51	WHITE DIAGONAL (12")		
P61	WHITE STOPBAR (24")		
P70	LEFT TURN ARROW		
P71	RIGHT TURN ARROW		
P72	STRAIGHT ARROW		
P77	U-TURN ARROW		

APPROVED: DocuSigned by: Kevin Bixby BDD8D2828912474...

DATE: 11/16/2021

SEAL

NORTH CAROLINA PROFESSIONAL SEAL 21047 ENGINEER KEVIN W. BIXBY

DOCUMENT NOT CONSIDERED FINAL UNLESS ALL SIGNATURES COMPLETED

DIVISION OF HIGHWAYS · STATE OF NORTH CAROLINA · DEPARTMENT OF TRANSPORTATION · WORK ZONE TRAFFIC CONTROL

ROADWAY STANDARD DRAWINGS & LEGEND

11/16/2021
W5601GA_TMP_PSH01A.dgn
kbixby

RK&K
P: (919) 878-9560
8601 Six Forks Road, Forum 1,Suite 700
Raleigh, North Carolina 27615-3960
NC License No. F-0112
Engineers | Construction Managers | Planners | Scientists
www.rkk.com
Responsive People | Creative Solutions

CHANGES MAY BE REQUIRED WHEN PHYSICAL DIMENSIONS IN THE DETAIL DRAWINGS, STANDARD DETAILS, AND ROADWAY DETAILS ARE NOT ATTAINABLE TO MEET FIELD CONDITIONS OR RESULT IN DUPLICATE OR UNDESIRED OVERLAPPING OF DEVICES. MODIFICATION MAY INCLUDE: MOVING, SUPPLEMENTING, COVERING, OR REMOVAL OF DEVICES AS DIRECTED BY THE ENGINEER.

THE FOLLOWING GENERAL NOTES APPLY AT ALL TIMES FOR THE DURATION OF THE CONSTRUCTION PROJECT EXCEPT WHEN OTHERWISE NOTED IN THE PLAN OR DIRECTED BY THE ENGINEER.

TIME RESTRICTIONS

A) DO NOT CLOSE OR NARROW TRAVEL LANES AS FOLLOWS:

ROAD NAME	DAY AND TIME RESTRICTIONS
ALL ROADS	MONDAY THROUGH FRIDAY 6:00 AM TO 9:00 AM 4:00 PM TO 6:00 PM

B) DO NOT CLOSE OR NARROW TRAVEL LANES DURING HOLIDAYS AND SPECIAL EVENTS AS FOLLOWS:

ROAD NAME
ALL ROADS

HOLIDAY

1. FOR ANY UNEXPECTED OCCURRENCE THAT CREATES UNUSUALLY HIGH TRAFFIC VOLUMES, AS DIRECTED BY THE ENGINEER.
2. FOR NEW YEAR'S, BETWEEN THE HOURS OF 6:00 AM DECEMBER 31st TO 6:00 PM JANUARY 2nd. IF NEW YEAR'S DAY IS ON A FRIDAY, SATURDAY, SUNDAY, OR MONDAY, THEN UNTIL 8:00 PM THE FOLLOWING TUESDAY.
3. FOR EASTER, BETWEEN THE HOURS OF 6:00 AM THURSDAY AND 6:00 PM MONDAY.
4. FOR MEMORIAL DAY, BETWEEN THE HOURS OF 6:00 AM FRIDAY TO 6:00 PM TUESDAY.
5. FOR INDEPENDENCE DAY, BETWEEN THE HOURS OF 6:00 AM THE DAY BEFORE INDEPENDENCE DAY AND 8:00 PM THE DAY AFTER INDEPENDENCE DAY. IF INDEPENDENCE DAY IS ON A FRIDAY, SATURDAY, SUNDAY, OR MONDAY, THEN BETWEEN THE HOURS OF 6:00 AM THE THURSDAY BEFORE INDEPENDENCE DAY AND 6:00 PM THE TUESDAY AFTER INDEPENDENCE DAY.
6. FOR LABOR DAY, BETWEEN THE HOURS OF 6:00 AM FRIDAY TO 6:00 PM TUESDAY.
7. FOR THANKSGIVING DAY, BETWEEN THE HOURS OF 6:00 AM TUESDAY AND 6:00 PM MONDAY.
8. FOR CHRISTMAS, BETWEEN THE HOURS OF 6:00 AM THE FRIDAY BEFORE THE WEEK OF CHRISTMAS DAY AND 6:00 PM THE FOLLOWING TUESDAY AFTER THE WEEK OF CHRISTMAS.

C) DO NOT CONDUCT ANY HAULING OPERATION AGAINST THE FLOW OF TRAFFIC OF AN OPEN TRAVEL WAY UNLESS THE HAULING OPERATION IS PROTECTED BY BARRIER OR GUARDRAIL, OR AS DIRECTED BY THE ENGINEER.

LANE AND SHOULDER CLOSURE REQUIREMENTS

D) REMOVE LANE CLOSURE DEVICES FROM THE LANE WHEN WORK IS NOT BEING PERFORMED BEHIND THE LANE CLOSURE OR WHEN A LANE CLOSURE IS NO LONGER NEEDED, OR AS DIRECTED BY THE ENGINEER.

E) WHEN PERSONNEL OR EQUIPMENT ARE WORKING WITHIN 15 FT. OF AN OPEN TRAVEL LANE, CLOSE THE NEAREST OPEN SHOULDER USING RDWY. STD. 1101.04 UNLESS THE WORK AREA IS PROTECTED BY BARRIER OR GUARDRAIL, OR A LANE CLOSURE IS INSTALLED.

F) WHEN PERSONNEL OR EQUIPMENT ARE WORKING ON THE SHOULDER ADJACENT TO AN UNDIVIDED FACILITY AND WITHIN 5 FT. OF AN OPEN TRAVEL LANE, CLOSE THE NEAREST OPEN TRAVEL LANE USING RDWY. STD. 1101.02 UNLESS THE WORK AREA IS PROTECTED BY BARRIER OR GUARDRAIL.

WHEN PERSONNEL OR EQUIPMENT ARE WORKING ON THE SHOULDER ADJACENT TO A DIVIDED FACILITY AND WITHIN 10 FT. OF AN OPEN TRAVEL LANE, CLOSE THE NEAREST OPEN TRAVEL LANE USING RDWY. STD. 1101.02 UNLESS THE WORK AREA IS PROTECTED BY BARRIER OR GUARDRAIL.

G) WHEN PERSONNEL OR EQUIPMENT ARE WORKING WITHIN A LANE OF TRAVEL OF AN UNDIVIDED FACILITY, CLOSE THE LANE ACCORDING TO THE TRAFFIC CONTROL PLANS, ROADWAY STANDARD DRAWINGS, OR AS DIRECTED BY THE ENGINEER. CONDUCT THE WORK SO THAT ALL PERSONNEL AND EQUIPMENT REMAIN WITHIN THE CLOSED TRAVEL LANE.

H) DO NOT WORK SIMULTANEOUSLY WITHIN 15 FT. ON BOTH SIDES OF AN OPEN TRAVEL WAY, RAMP, OR LOOP WITHIN THE SAME LOCATION UNLESS PROTECTED WITH GUARDRAIL OR BARRIER.

PAVEMENT EDGE DROP-OFF REQUIREMENTS

I) BACKFILL AT A 6:1 SLOPE UP TO THE EDGE AND ELEVATION OF EXISTING PAVEMENT IN AREAS ADJACENT TO AN OPEN TRAVEL LANE THAT HAS AN EDGE OF PAVEMENT DROP-OFF AS FOLLOWS:

BACKFILL DROP-OFFS THAT EXCEED 2 INCHES ON ROADWAYS WITH POSTED SPEED LIMITS OF 45 MPH OR GREATER.

BACKFILL DROP-OFFS THAT EXCEED 3 INCHES ON ROADWAYS WITH POSTED SPEED LIMITS LESS THAN 45 MPH.

BACKFILL WITH SUITABLE COMPACTED MATERIAL, AS APPROVED BY THE ENGINEER AT NO EXPENSE TO THE DEPARTMENT.

APPROVED: DocuSigned by: Kevin Bisby BDD8D2626912474...
DATE: 11/19/2021
SEAL
NORTH CAROLINA PROFESSIONAL SEAL 21047 ENGINEER KEVIN W. BISBY
DOCUMENT NOT CONSIDERED FINAL UNLESS ALL SIGNATURES COMPLETED

DIVISION OF HIGHWAYS · STATE OF NORTH CAROLINA · DEPARTMENT OF TRANSPORTATION · WORK ZONE TRAFFIC CONTROL

GENERAL NOTES

11/19/2021
W5601GA_TMP_PSH02.dgn
kbisby

PROJ. REFERENCE NO.	SHEET NO.
W-5601GA	TMP-2A

RK&K
P: (919) 878-9560
8601 Six Forks Road, Forum 1,Suite 700
Raleigh, North Carolina 27615-5960
NC License No. F-0112
Engineers | Construction Managers | Planners | Scientists
www.rkk.com
Responsive People | Creative Solutions

J) DO NOT EXCEED A DIFFERENCE OF 2 INCHES IN ELEVATION BETWEEN OPEN LANES OF TRAFFIC FOR NOMINAL LIFTS OF 1.5 INCHES. INSTALL ADVANCE WARNING "UNEVEN LANES" SIGNS (W8-11) (500 FEET) IN ADVANCE AND A MINIMUM OF EVERY HALF MILE THROUGHOUT THE UNEVEN AREA.

SIGNING

K) INSTALL ADVANCE WORK ZONE WARNING SIGNS WHEN WORK IS WITHIN 40 FT. FROM THE EDGE OF TRAVEL LANE AND NO MORE THAN THREE (3) DAYS PRIOR TO THE BEGINNING OF CONSTRUCTION.

L) ENSURE ALL NECESSARY SIGNING IS IN PLACE PRIOR TO ALTERING ANY TRAFFIC PATTERN.

TRAFFIC CONTROL DEVICES

M) WHEN LANE CLOSURES ARE NOT IN EFFECT SPACE CHANNELIZING DEVICES IN WORK AREA NO GREATER IN FEET THAN TWICE THE POSTED SPEED LIMIT (MPH) EXCEPT, 10 FT. ON-CENTER IN RADII, AND 3 FT. OFF THE EDGE OF AN OPEN TRAVEL WAY. REFER TO STANDARD SPECIFICATIONS FOR ROADS AND STRUCTURES SECTION 1130 (DRUMS), 1135 (CONES) AND 1180 (SKINNY DRUMS) FOR ADDITIONAL REQUIREMENTS.

N) PLACE TYPE III BARRICADES WITH "ROAD CLOSED" SIGN R11-2 ATTACHED, OF SUFFICIENT LENGTH TO CLOSE THE ENTIRE ROADWAY.

O) PLACE ADDITIONAL SETS OF THREE CHANNELIZING DEVICES PERPENDICULAR TO THE EDGE OF TRAVEL WAY ON 500 FT. CENTERS WHEN UNOPENED LANES ARE CLOSED TO TRAFFIC.

PAVEMENT MARKINGS AND MARKERS

P) INSTALL TEMPORARY PAVEMENT MARKINGS AND TEMPORARY PAVEMENT MARKERS ON INTERIM LAYERS OF PAVEMENT AS FOLLOWS:

ROAD NAME	MARKING	MARKER
ALL ROADS	PAINT	RAISED TEMPORARY

Q) PLACE ONE APPLICATION OF PAINT FOR TEMPORARY TRAFFIC PATTERNS. PLACE A SECOND APPLICATION OF PAINT SIX MONTHS AFTER THE INITIAL APPLICATION AND EVERY SIX MONTHS AS DIRECTED BY THE ENGINEER.

R) TIE PROPOSED PAVEMENT MARKING LINES TO EXISTING PAVEMENT MARKING LINES.

S) REMOVE/REPLACE ANY CONFLICTING/DAMAGED PAVEMENT MARKINGS AND MARKERS BY THE END OF EACH DAY'S OPERATION.

T) TRACE THE MONOLITHIC ISLAND LOCATIONS WITH THE PROPER COLOR PAVEMENT MARKINGS PRIOR TO INSTALLATION. PLACE DRUMS TO DELINEATE ANY REMOVED MONOLITHIC ISLANDS.

MISCELLANEOUS

U) LAW ENFORCEMENT MAY BE USED TO MAINTAIN TRAFFIC THROUGH THE WORK AREA AND INTERSECTIONS AS DIRECTED BY THE ENGINEER.

APPROVED: DocuSigned by: Kevin Bisby BDD8D2628912474...

DATE: 11/16/2021

SEAL

NORTH CAROLINA PROFESSIONAL SEAL 21047 ENGINEER KEVIN W. BISBY

DOCUMENT NOT CONSIDERED FINAL UNLESS ALL SIGNATURES COMPLETED

DIVISION OF HIGHWAYS · STATE OF NORTH CAROLINA · DEPARTMENT OF TRANSPORTATION · WORK ZONE TRAFFIC CONTROL

GENERAL NOTES

11/16/2021
W5601GA_TMP_PSH02A.dgn
kbisby

PROJ. REFERENCE NO.	SHEET NO.
W-5601GA	TMP-3

RK&K
P: (919) 878-9560
8601 Six Forks Road, Forum 1,Suite 700
Raleigh, North Carolina 27615-3960
NC License No. F-0112
Engineers | Construction Managers | Planners | Scientists
www.rkk.com
Responsive People | Creative Solutions

TRAFFIC CONTROL PHASING

PHASE I

STEP 1:
USING RDWY STD DWG 1101.01, ERECT WORK ZONE ADVANCE WARNING SIGNS ON -L- (US 17), -Y2- (THOMASBORO RD) AND -Y1- (PEA LANDING RD)

STEP 2:
USING RDWY STD DWG 1101.02, CONSTRUCT THE PROPOSED WIDENING ON -L- (US 17) AND THE PROPOSED WIDENING ON -Y2- (THOMASBORO RD) AND -Y1- (PEA LANDING RD) UP TO THE EDGE AND ELEVATION OF EXISTING PAVEMENT WHILE MAINTAING CURRENT TRAFFIC PATTERNS. (REFER TO TMP-4 THROUGH TMP-6)

STEP 3:
USING RDWY STD DWG 1101.02, CLOSE EXISTING MEDIAN OPENINGS AT -L- STA 18+00± AND STA 45+50±. CONSTRUCT THE PROPOSED MEDIAN ISLANDS AND PAVEMENT REMOVAL.

PHASE II

STEP 1:
USING RDWY STD DWG 1101.02 CONSTRUCT SIGNALS, APPLY PAVEMENT MARKINGS AND OPEN U-TURN LANES TO TRAFFIC. SIMULTANEOUSLY CLOSE THE EXISTING US 17/PEA LANDING RD/THOMASBORO RD TO THROUGH TRAFFIC. (REFER TO TMP-7 THROUGH TMP-9)

STEP 2:
USING RDWY STD 1101.02, CONSTRUCT MEDIAN ISLANDS ON US 17, -Y1- (PEA LANDING RD) AND -Y2- (THOMASBORO RD). (SEE TMP-8)

PHASE III

STEP 1:
USING RDWY STD 1101.02, CONSTRUCT SIGNAL, APPLY PAVEMENT MARKINGS AND OPEN THE US 17/PEA LANDING RD/THOMASBORO RD TO TRAFFIC. (REFER TO TMP-10 AND TMP-11)

STEP 2:
USING RDWY STD DWG 1101.02, PAVE THE FINAL LAYER OF SURFACE COURSE AND APPLY THE FINAL PAVEMENT MARKINGS. (REFER TO THE FINAL PAVEMENT MARKING PLANS).

APPROVED: DocuSigned by: Kevin Bisby BDD8D2628912474...
DATE: 11/16/2021
SEAL
NORTH CAROLINA PROFESSIONAL SEAL 21047 ENGINEER KEVIN W. BISBY
DOCUMENT NOT CONSIDERED FINAL UNLESS ALL SIGNATURES COMPLETED

DIVISION OF HIGHWAYS · STATE OF NORTH CAROLINA · DEPARTMENT OF TRANSPORTATION · WORK ZONE TRAFFIC CONTROL

TEMPORARY
TRAFFIC CONTROL PHASING

11/16/2021
W5601GA_TMP_PSH03.dgn
kbisby

PROJ. REFERENCE NO.	SHEET NO.
W-5601GA	TMP-4

RK&K
P: (919) 878-9560
8601 Six Forks Road, Forum 1,Suite 700
Raleigh, North Carolina 27615-3960
NC License No. F-0112
Engineers | Construction Managers | Planners | Scientists
www.rkk.com
Responsive People | Creative Solutions

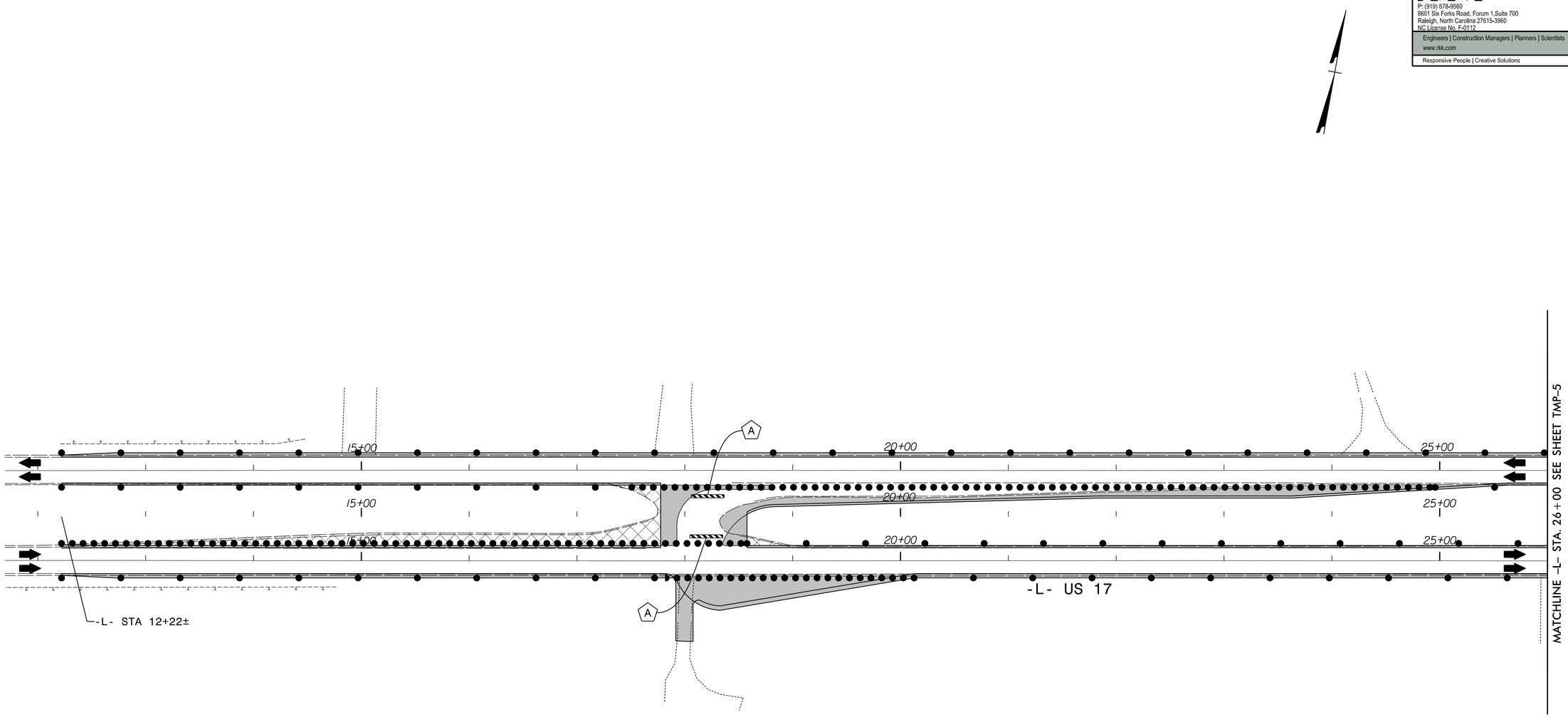

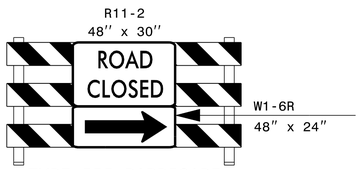

TYPE III BARRICADE

A

APPROVED: DocuSigned by: Kevin Bisby
BDD8D2628912474...

DATE: 11/16/2021

SEAL

NORTH CAROLINA PROFESSIONAL SEAL 21047 ENGINEER KEVIN W. BISBY

DOCUMENT NOT CONSIDERED FINAL UNLESS ALL SIGNATURES COMPLETED

DIVISION OF HIGHWAYS · STATE OF NORTH CAROLINA · DEPARTMENT OF TRANSPORTATION · WORK ZONE TRAFFIC CONTROL

PHASE I DETAIL

11/16/2021
W5601GA_TMP_PSH04.dgn
kbisby

PROJ. REFERENCE NO.	SHEET NO.
W-5601GA	TMP-5

RK&K
P: (919) 878-9560
8601 Six Forks Road, Forum 1,Suite 700
Raleigh, North Carolina 27615-3960
NC License No. F-0112
Engineers | Construction Managers | Planners | Scientists
www.rkk.com
Responsive People | Creative Solutions

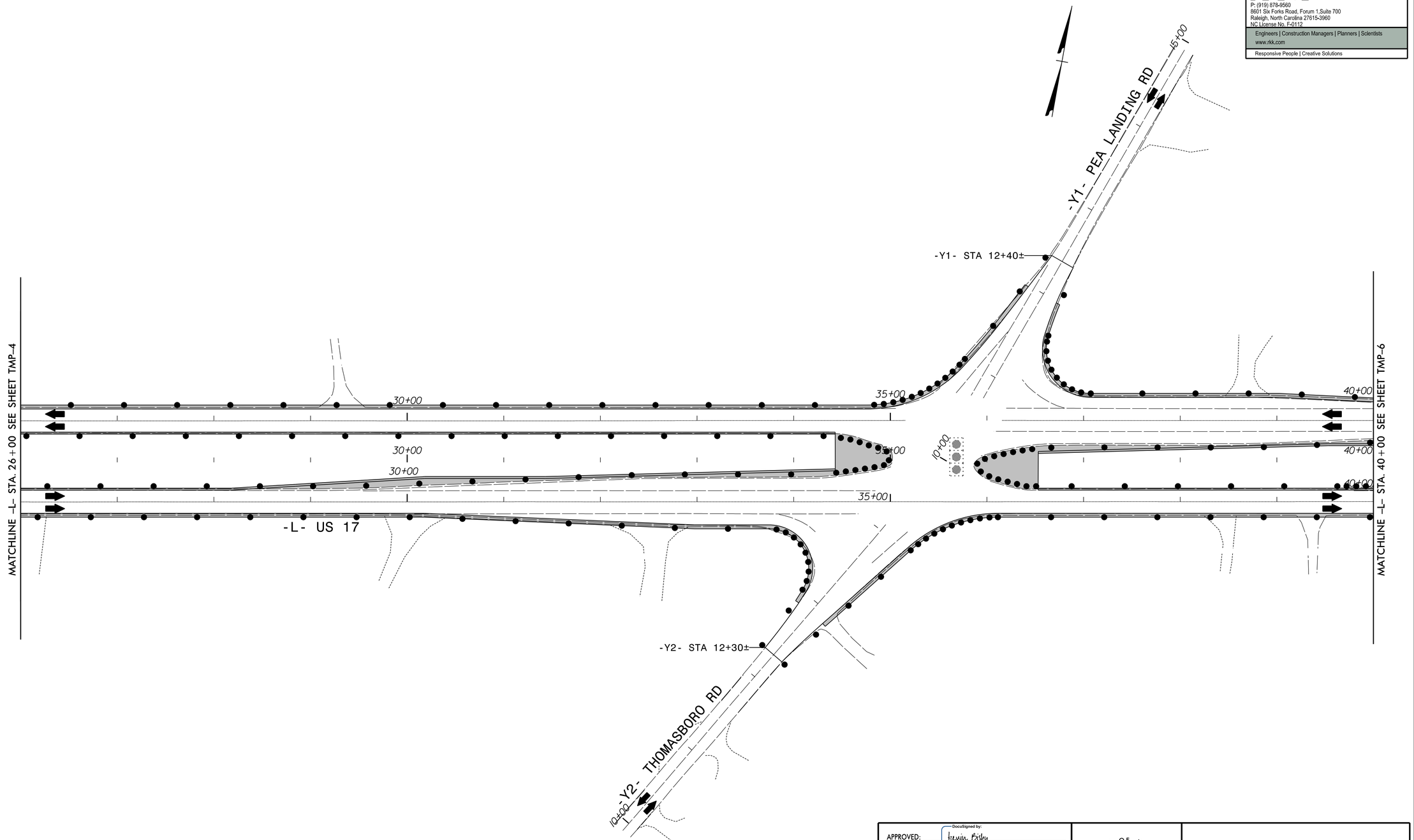

APPROVED: DocuSigned by: Kevin Bisby
BDD8D2628912474...

DATE: 11/16/2021

SEAL

NORTH CAROLINA PROFESSIONAL SEAL 21047 ENGINEER KEVIN W. BISBY

DOCUMENT NOT CONSIDERED FINAL UNLESS ALL SIGNATURES COMPLETED

DIVISION OF HIGHWAYS
STATE OF NORTH CAROLINA
DEPARTMENT OF TRANSPORTATION
WORK ZONE TRAFFIC CONTROL

PHASE I DETAIL

11/16/2021
W5601GA_TMP_PSH05.dgn
kbisby

PROJ. REFERENCE NO.	SHEET NO.
W-5601GA	TMP-6

RK&K
P: (919) 878-9560
8601 Six Forks Road, Forum 1,Suite 700
Raleigh, North Carolina 27615-3960
NC License No. F-0112
Engineers | Construction Managers | Planners | Scientists
www.rkk.com
Responsive People | Creative Solutions

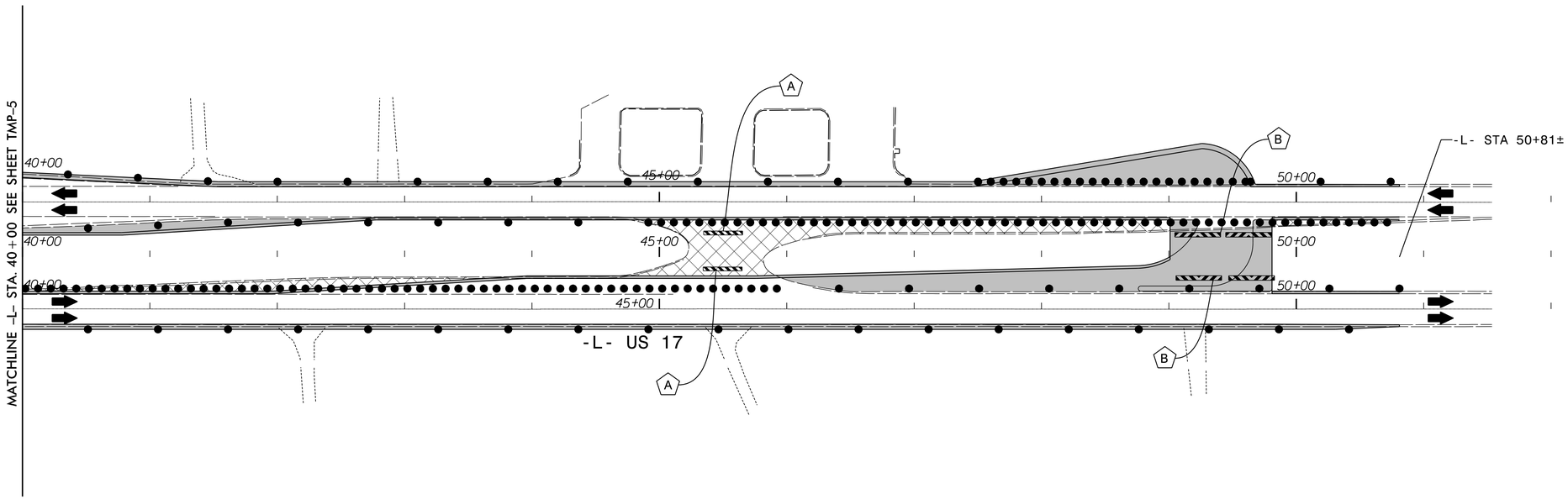

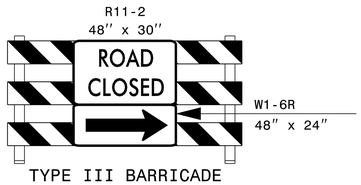

TYPE III BARRICADE

A



TYPE III BARRICADE

B

APPROVED: DocuSigned by: Kevin Bisby BDC8D2628912474...

DATE: 11/16/2021

SEAL

NORTH CAROLINA PROFESSIONAL SEAL 21047 ENGINEER KEVIN W. BISBY

DOCUMENT NOT CONSIDERED FINAL UNLESS ALL SIGNATURES COMPLETED

DIVISION OF HIGHWAYS · STATE OF NORTH CAROLINA · DEPARTMENT OF TRANSPORTATION · WORK ZONE TRAFFIC CONTROL

PHASE I DETAIL

11/16/2021
W5601GA_TMP_PSH06.dgn
kbisby

PROJ. REFERENCE NO.	SHEET NO.
W-5601GA	TMP-7

RK&K
P: (919) 878-9560
8601 Six Forks Road, Forum 1,Suite 700
Raleigh, North Carolina 27615-3960
NC License No. F-0112
Engineers | Construction Managers | Planners | Scientists
www.rkk.com
Responsive People | Creative Solutions

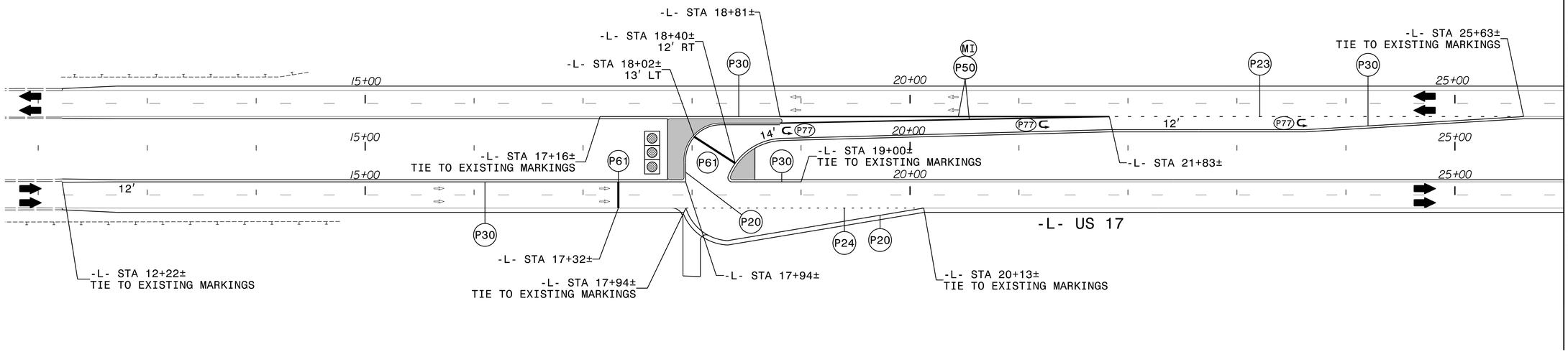

ERECT PROPOSED SIGNING AS APPLICABLE

APPROVED: DocuSigned by: Kevin Bisby BDD8D2628912474...

DATE: 11/16/2021

SEAL

NORTH CAROLINA PROFESSIONAL SEAL 21047 ENGINEER KEVIN W. BISBY

DOCUMENT NOT CONSIDERED FINAL UNLESS ALL SIGNATURES COMPLETED

DIVISION OF HIGHWAYS · STATE OF NORTH CAROLINA · DEPARTMENT OF TRANSPORTATION · WORK ZONE TRAFFIC CONTROL

PHASE II DETAIL

11/16/2021
W5601GA_TMP_PSH07.dgn
kbisby

PROJ. REFERENCE NO.	SHEET NO.
W-5601GA	TMP-8

RK&K
P: (919) 878-9560
8601 Six Forks Road, Forum 1,Suite 700
Raleigh, North Carolina 27615-3960
NC License No. F-0112
Engineers | Construction Managers | Planners | Scientists
www.rkk.com
Responsive People | Creative Solutions

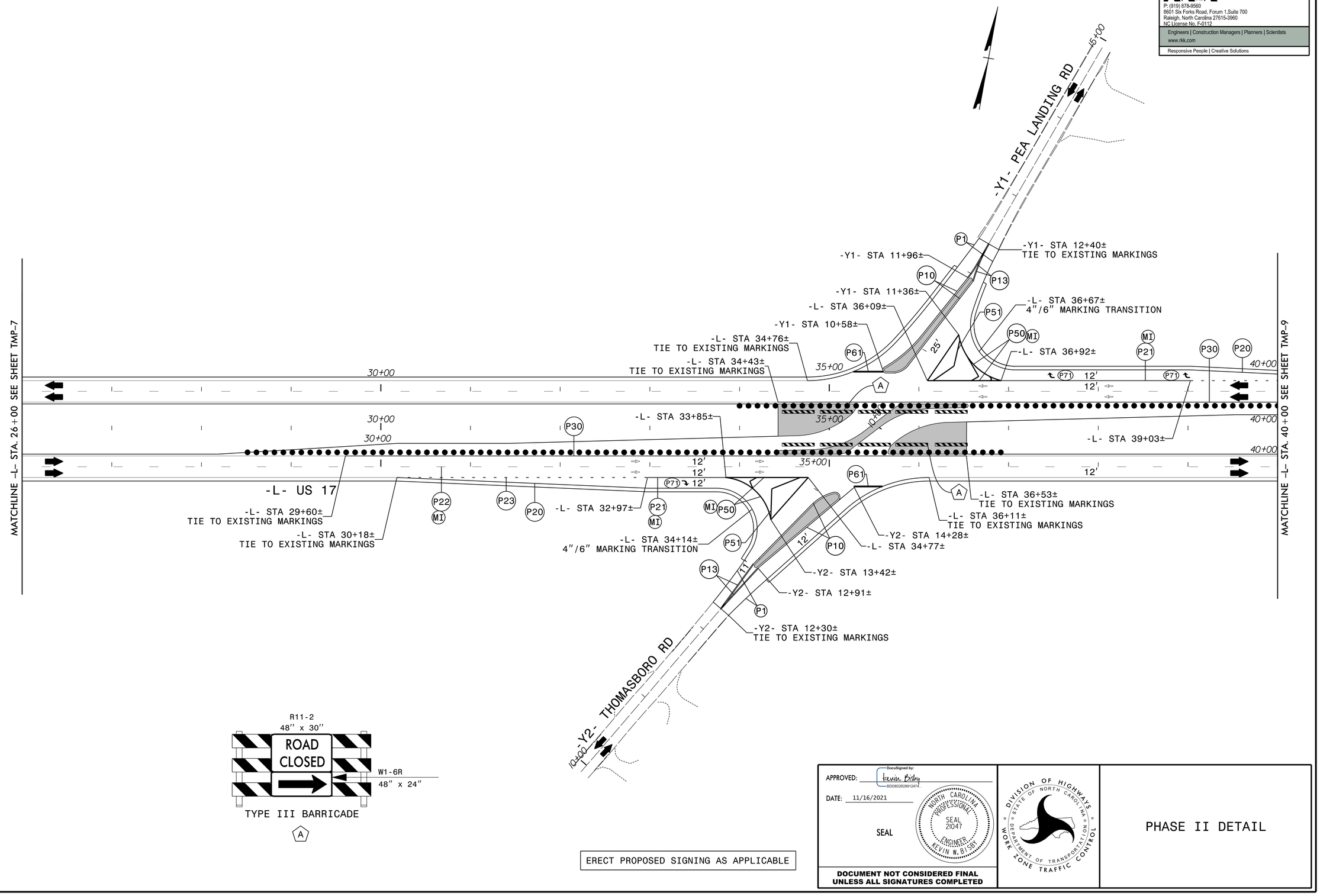

R11-2
48" x 30"
ROAD CLOSED
W1-6R
48" x 24"
TYPE III BARRICADE
A

ERECT PROPOSED SIGNING AS APPLICABLE

APPROVED: DocuSigned by: Kevin Bixby BDD8D2626912474...
DATE: 11/16/2021
SEAL
NORTH CAROLINA PROFESSIONAL SEAL 21047 ENGINEER KEVIN W. BIXBY

DOCUMENT NOT CONSIDERED FINAL UNLESS ALL SIGNATURES COMPLETED

DIVISION OF HIGHWAYS STATE OF NORTH CAROLINA DEPARTMENT OF TRANSPORTATION WORK ZONE TRAFFIC CONTROL

PHASE II DETAIL

11/16/2021
W5601GA_TMP_PSH08.dgn
kbixby

PROJ. REFERENCE NO.	SHEET NO.
W-5601GA	TMP-9

RK&K
P: (919) 878-9560
8601 Six Forks Road, Forum 1,Suite 700
Raleigh, North Carolina 27615-3960
NC License No. F-0112
Engineers | Construction Managers | Planners | Scientists
www.rkk.com
Responsive People | Creative Solutions

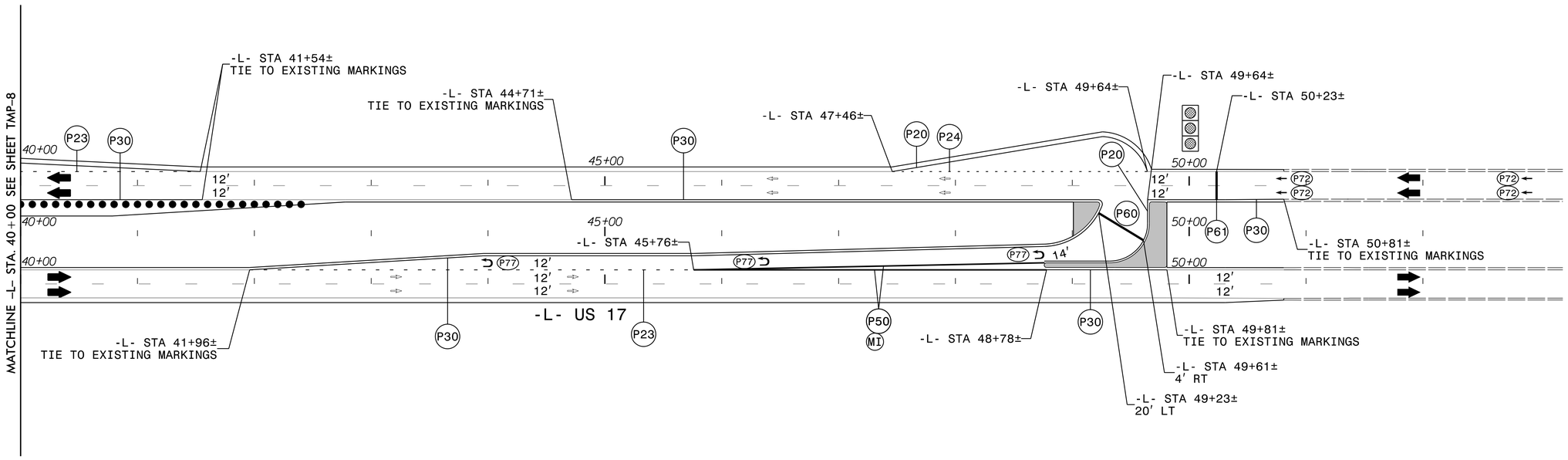

ERECT PROPOSED SIGNING AS APPLICABLE

APPROVED: DocuSigned by: Kevin Bisby 8DC8C0282891247...

DATE: 11/16/2021

SEAL

NORTH CAROLINA PROFESSIONAL SEAL 21047 ENGINEER KEVIN W. BISBY

DOCUMENT NOT CONSIDERED FINAL UNLESS ALL SIGNATURES COMPLETED

DIVISION OF HIGHWAYS · STATE OF NORTH CAROLINA · DEPARTMENT OF TRANSPORTATION · WORK ZONE TRAFFIC CONTROL

PHASE II DETAIL

11/16/2021
W5601GA_TMP_PSH09.dgn
KBisby

PROJ. REFERENCE NO.	SHEET NO.
W-5601GA	TMP-10

RK&K
P: (919) 878-9560
8601 Six Forks Road, Forum 1,Suite 700
Raleigh, North Carolina 27615-3960
NC License No. F-0112
Engineers | Construction Managers | Planners | Scientists
www.rkk.com
Responsive People | Creative Solutions

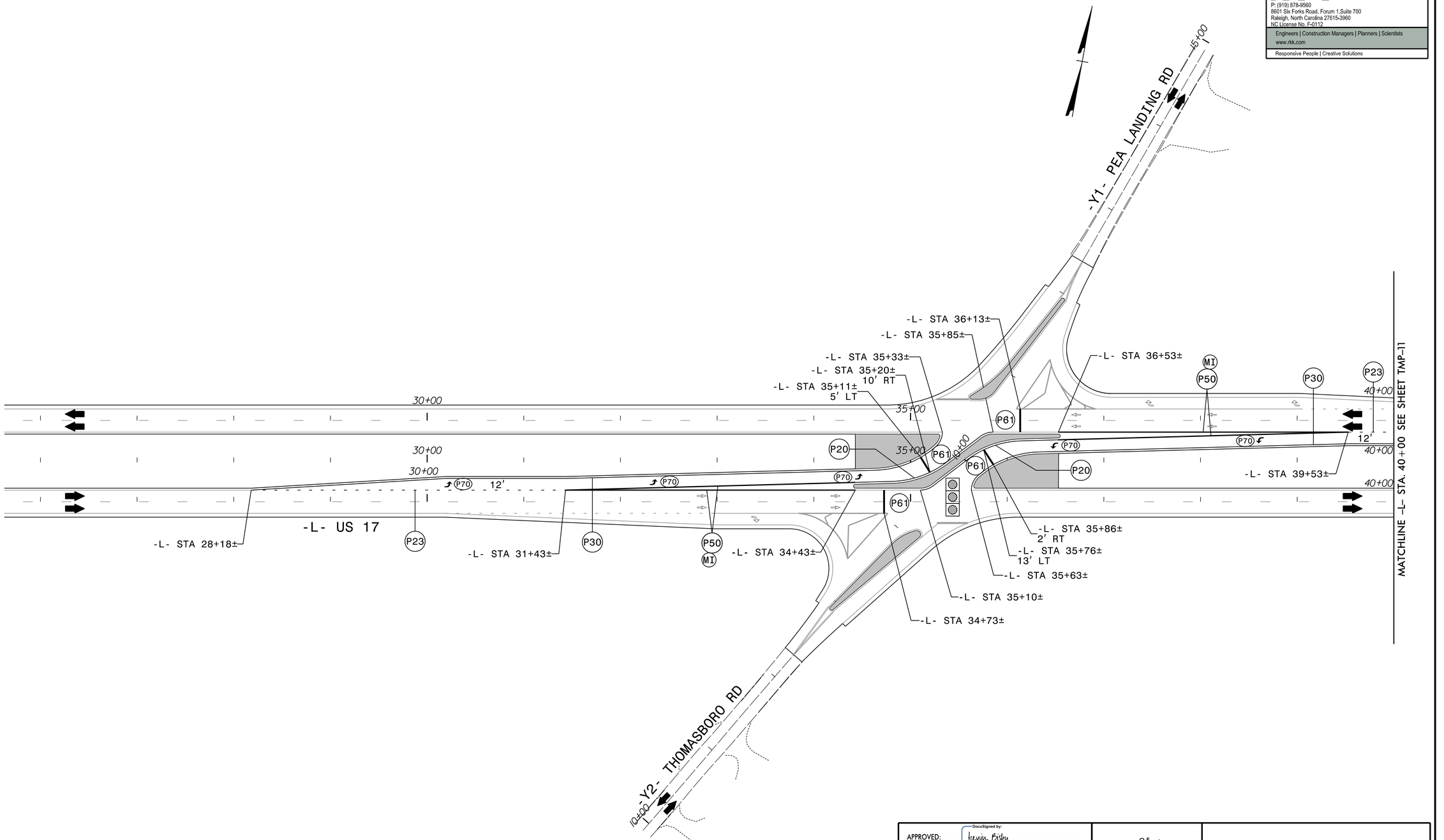

ERECT PROPOSED SIGNING AS APPLICABLE

APPROVED: DocuSigned by: Kevin Bisby
BDD8D2628912474...

DATE: 11/16/2021

SEAL

NORTH CAROLINA PROFESSIONAL SEAL 21047 ENGINEER KEVIN W. BISBY

DOCUMENT NOT CONSIDERED FINAL UNLESS ALL SIGNATURES COMPLETED

DIVISION OF HIGHWAYS
STATE OF NORTH CAROLINA
DEPARTMENT OF TRANSPORTATION
WORK ZONE TRAFFIC CONTROL

PHASE III DETAIL

11/16/2021
W5601GA_TMP_PSH10.dgn
kbisby

PROJ. REFERENCE NO.	SHEET NO.
W-5601GA	TMP-11

RK&K
P: (919) 878-9560
8601 Six Forks Road, Forum 1,Suite 700
Raleigh, North Carolina 27615-3960
NC License No. F-0112
Engineers | Construction Managers | Planners | Scientists
www.rkk.com
Responsive People | Creative Solutions

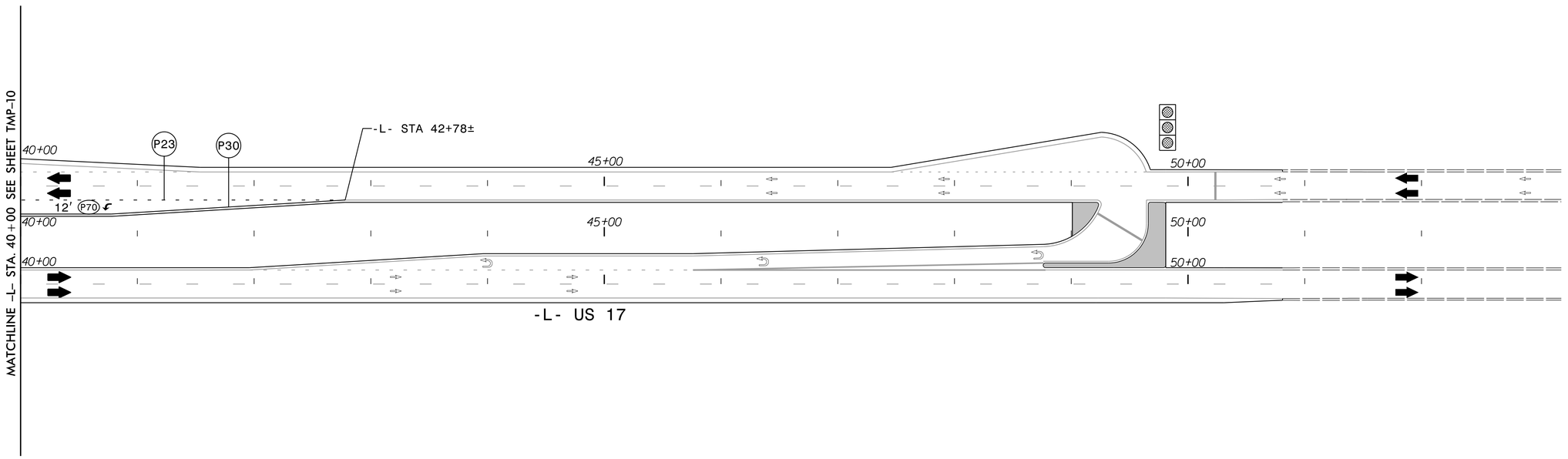

APPROVED: DocuSigned by: Kevin Bixby BDD8D2628912474...

DATE: 11/16/2021

SEAL

NORTH CAROLINA PROFESSIONAL SEAL 21047 ENGINEER KEVIN W. BIXBY

DOCUMENT NOT CONSIDERED FINAL UNLESS ALL SIGNATURES COMPLETED

DIVISION OF HIGHWAYS · STATE OF NORTH CAROLINA · DEPARTMENT OF TRANSPORTATION · WORK ZONE TRAFFIC CONTROL

PHASE III DETAIL

11/16/2021
W5601GA_TMP_PSHIII.dgn
KBixby

CONTRACT: DC00326 T.I.P.: W-5601GA

TIP NO.	SHEET NO.
W-5601GA	PMP-1

APPROVED: DocuSigned by: David T Sears 069183F28E5741E...

DATE: 11/16/2021

SEAL

NORTH CAROLINA PROFESSIONAL SEAL 044558 ENGINEER DAVID T. SEARS

DOCUMENT NOT CONSIDERED FINAL UNLESS ALL SIGNATURES COMPLETED

STATE OF NORTH CAROLINA
DEPARTMENT OF TRANSPORTATION

PAVEMENT MARKING PLAN
BRUNSWICK COUNTY
LOCATION: US 17 AT SR 1165 (THOMASBORO ROAD)/SR1304 (PEA LANDING ROAD)

INDEX

SHEET NO.	DESCRIPTION
PMP-1	RDWY. STD. DWGS., GENERAL NOTES
PMP-1A	REVISED PVMT. MRKG. RDWY. STD. DWGS.
PMP-2 THRU PMP-4	PAVEMENT MARKING DETAILS

ROADWAY STANDARD DRAWING

THE FOLLOWING ROADWAY STANDARDS AS APPEAR IN "ROADWAY STANDARD DRAWINGS" - PROJECT SERVICES UNIT - N.C. DEPARTMENT OF TRANSPORTATION - RALEIGH, N.C., DATED JANUARY 2018 ARE APPLICABLE TO THIS PROJECT AND BY REFERENCE HEREBY ARE CONSIDERED A PART OF THESE PLANS:

STD. NO.	TITLE
1205.01	PAVEMENT MARKINGS - LINE TYPES AND OFFSETS
1205.02	PAVEMENT MARKINGS - TWO-LANE AND MULTILANE ROADWAYS
1205.04	PAVEMENT MARKINGS - INTERSECTIONS
1205.05	PAVEMENT MARKINGS - TURN LANES
1205.08	PAVEMENT MARKINGS - SYMBOLS AND WORD MESSAGES
1205.09	PAVEMENT MARKINGS - PAINTED ISLANDS
1205.15	PAVEMENT MARKINGS - SUPERSTREETS
1250.01	RAISED PAVEMENT MARKERS - INSTALLATION SPACING
1251.01	RAISED PAVEMENT MARKERS - PERMANENT AND TEMPORARY
1253.01	RAISED PAVEMENT MARKERS - SNOWPLOWABLE

GENERAL NOTES

THE FOLLOWING GENERAL NOTES APPLY AT ALL TIMES FOR THE DURATION OF THE CONSTRUCTION PROJECT, EXCEPT WHEN OTHERWISE NOTED IN THE PLAN, OR DIRECTED BY THE ENGINEER.

A) INSTALL PAVEMENT MARKINGS AND PAVEMENT MARKERS ON THE FINAL SURFACE AS FOLLOWS:

ROAD NAME	MARKING	MARKER
-L- US 117	THERMOPLASTIC	SNOWPLOWABLE, REFLECTIVE
-Y1-(PEA LANDING RD)	THERMOPLASTIC	RAISED, REFLECTIVE
-Y2-(THOMASBORO RD)	THERMOPLASTIC	RAISED, REFLECTIVE

B) TIE PROPOSED PAVEMENT MARKING LINES TO EXISTING PAVEMENT MARKING LINES.

C) REMOVE/REPLACE ANY CONFLICTING/DAMAGED PAVEMENT MARKINGS AND MARKERS.

D) PASSING ZONES WILL BE DETERMINED IN THE FIELD AND MUST BE APPROVED BY THE ENGINEER.

E) STOP BAR LOCATION AT NON-SIGNALIZED INTERSECTIONS MAY BE ADJUSTED AS DIRECTED BY THE ENGINEER.

F) UNLESS OTHERWISE SPECIFIED, HEATED-IN-PLACE THERMOPLASTIC MAY BE USED IN LIEU OF EXTRUDED THERMOPLASTIC FOR STOP BARS, SYMBOLS, CHARACTERS AND DIAGONALS. IF HEATED-IN-PLACE IS USED, IT SHALL BE PAID FOR USING THE EXTRUDED THERMOPLASTIC PAY ITEM.

PLAN REVIEWED BY: N.C.D.O.T. DIVISION 3

DAVID B. LEONARD, PE DDC ENGINEER, DIVISION 3

STATE OF NORTH CAROLINA DEPARTMENT OF TRANSPORTATION

PLAN PREPARED BY: R K & K ENGINEERS

C. Byron Holden, P.E. Project Manager

Allen Tutt Sr. Designer

RK&K
P: (919) 878-9560
8601 Six Forks Road, Forum 1,Suite 700
Raleigh, North Carolina 27615-3960
NC License No. F-0112
Engineers | Construction Managers | Planners | Scientists
www.rkk.com
Responsive People | Creative Solutions

11/16/2021
W5601GA_TCP_PM_TSH.dgn
dsears

TIP NO.	SHEET NO.
W-5601CA	RMP-1A

APPROVED: Matthew V. Springer
DATE: 8/13/2019
DocuSigned by: 8C0CF1C3B584403...

SEAL

NORTH CAROLINA PROFESSIONAL SEAL 042546 ENGINEER MATTHEW V. SPRINGER

STATE OF NORTH CAROLINA
DEPT. OF TRANSPORTATION
DIVISION OF HIGHWAYS
RALEIGH, N.C.

8-19

ENGLISH DETAIL DRAWING FOR
PAVEMENT MARKINGS
INTERSECTIONS

TWO-LANE, TWO-WAY ROADWAY

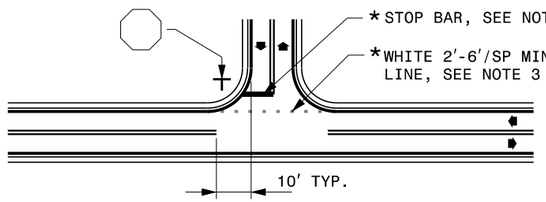

TWO-LANE, TWO-WAY ROADWAY WITH TWO-WAY LEFT TURN LANE

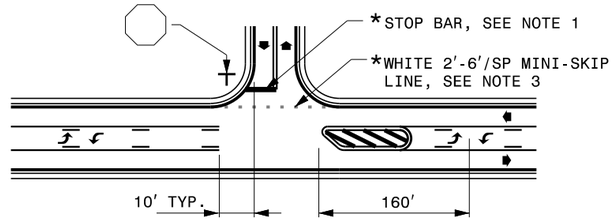

UNDIVIDED MULTI-LANE ROADWAY

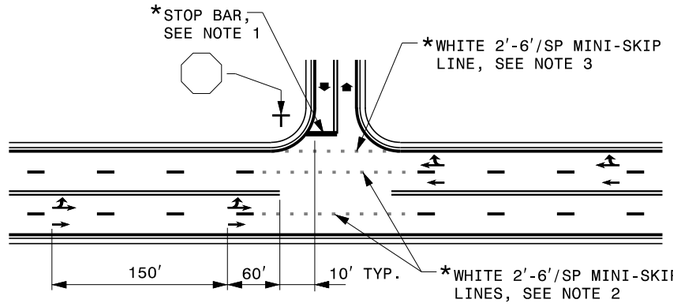

DIVIDED MULTI-LANE ROADWAY WITH TURN BAY

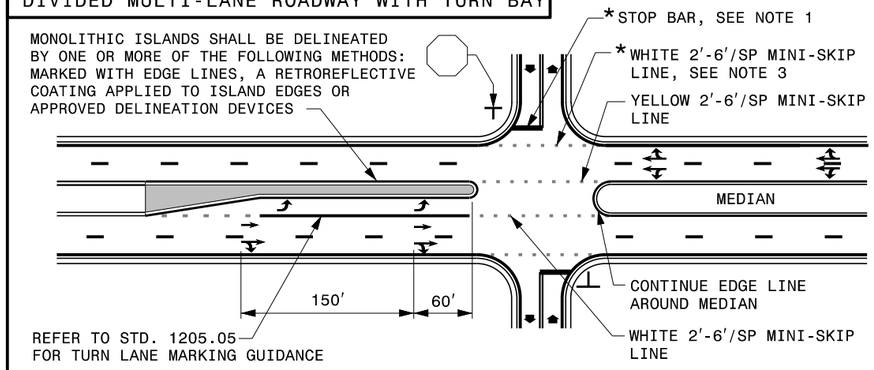

DIVIDED MULTI-LANE ROADWAY WITH WIDE MEDIAN CROSSOVER

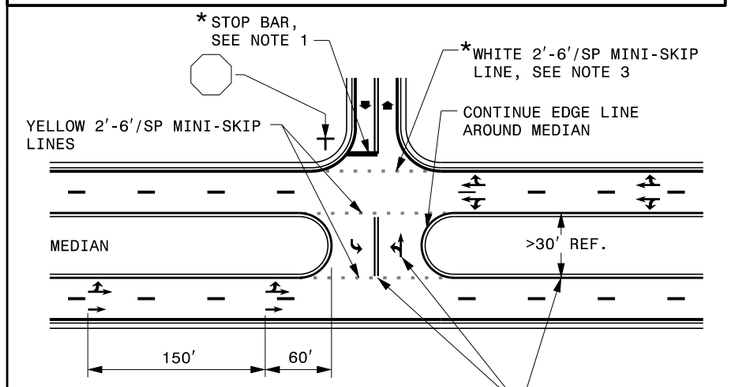

USE DOUBLE YELLOW CENTER LINE AND ARROW SYMBOLS IN MEDIAN CROSSOVER WHEN WIDTH OF MEDIAN EXCEEDS 30 FT, OTHERWISE THEY ARE NOT REQUIRED.

GENERAL NOTES:

1- PLACEMENT OF STOP BARS AT NON-SIGNALIZED INTERSECTIONS IS OPTIONAL AND USED WHERE IT IS IMPORTANT TO INDICATE THE POINT WHICH VEHICLES ARE REQUIRED TO STOP. PLACE STOP BARS NO LESS THAN 4 FEET AND NO MORE THAN 30 FEET FROM THE NEAREST EDGE OF THE INTERSECTING ROADWAY. USE 10 FEET AS THE TYPICAL SETBACK DISTANCE OR AS DIRECTED BY THE ENGINEER.

2- MINI-SKIP LANE LINE EXTENSIONS SHOULD BE USED AT INTERSECTIONS THAT HAVE REDUCED VISIBILITY CONDITIONS SUCH AS OFFSET, SKEWED, OR CURVED ROADWAYS.

3- MINI-SKIP EDGE LINE EXTENSIONS MAY BE PLACED THROUGH INTERSECTIONS AND MAJOR DRIVEWAYS.

4- REFER TO ROADWAY STANDARD DRAWINGS 1205.01, 1205.02, 1205.05, 1205.08 AND 1205.09 FOR ADDITIONAL PAVEMENT MARKING GUIDANCE.

LEGEND

STOP SIGN	STATIONARY SIGN
DIRECTION OF TRAFFIC FLOW	PAVEMENT MARKING SYMBOLS
* OPTIONAL	

STATE OF
NORTH CAROLINA
DEPT. OF TRANSPORTATION
DIVISION OF HIGHWAYS
RALEIGH, N.C.

8-19

ENGLISH DETAIL DRAWING FOR
PAVEMENT MARKINGS
INTERSECTIONS

REVISED PAVEMENT MARKING ROADWAY STANDARD DRAWING

U:\1\1\1
S:\S&DU\Standards Group\Standards and Drawings\Drawings\2018 Standard Dwgs\Division 12 Final\2050402_08-13-19.dgn
User:dstokes

TIP NO.	SHEET NO.
W-5601GA	PMP-2

APPROVED: DocuSigned by: David T Sears 09183F28E5741E...

DATE: 11/16/2021

SEAL

NORTH CAROLINA PROFESSIONAL SEAL 044558 ENGINEER DAVID T. SEARS

DOCUMENT NOT CONSIDERED FINAL UNLESS ALL SIGNATURES COMPLETED

NSRS 2011

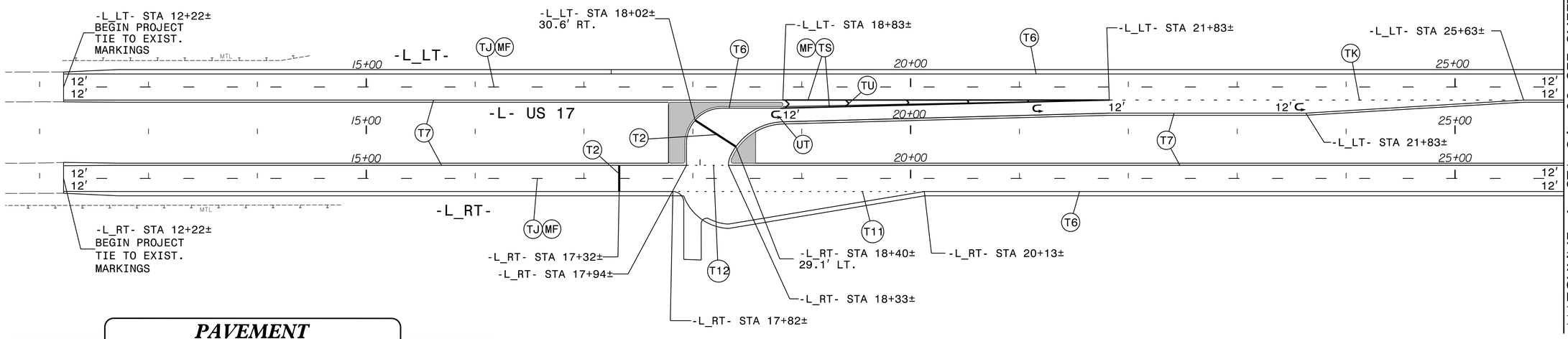

PAVEMENT MARKING SCHEDULE

SYMBOL	DESCRIPTION
T2	WHITE STOPBAR (24”, 90 MIL)
T6	WHITE EDGELINE (6”, 90 MIL)
T7	YELLOW EDGELINE (6”, 90 MIL)
T11	2 FT.-6 FT./SP WHITE MINISKIP (6”, 90 MIL)
T12	2 FT.-6 FT./SP YELLOW MINISKIP (6”, 90 MIL)
TA	WHITE EDGELINE (4”, 90 MIL)
TB	YELLOW EDGELINE (4”, 90 MIL)
TI	YELLOW DOUBLE CENTER LINE (4”, 90 MIL)
TJ	10 FT. WHITE SKIP (6”, 90 MIL)
TK	3 FT.-9 FT./SP WHITE MINISKIP (6”, 90 MIL)
TL	WHITE SOLID LANE LINE (6”, 90 MIL)
TN	WHITE GORELINE (8", 90 MIL)
TS	WHITE GORELINE (12”, 90 MIL)
TU	WHITE DIAGONAL (12”, 90 MIL)
UA	LEFT TURN ARROW (90 MIL)
UB	RIGHT TURN ARROW (90 MIL)
UN	YIELD LINE TRIANGLE (24”, 90 MIL)
UT	U-TURN ARROW (90 MIL)
MA	PERMANENT RAISED MARKER, (YELLOW/YELLOW)
MF	SNOWPLOWABLE, (CRYSTAL/RED)

RK&K
P: (919) 878-9560
8601 Six Forks Road, Forum 1,Suite 700
Raleigh, North Carolina 27615-3960
NC License No. F-0112
Engineers | Construction Managers | Planners | Scientists
www.rkk.com
Responsive People | Creative Solutions

PAVEMENT MARKING DETAIL

11/16/2021
W5601GA_TCP_PM_PSH02.dgn
dseors

TIP NO.	SHEET NO.
W-5601GA	PMP-3

APPROVED: DocuSigned by: David T Sears 06918F28E5741E...

DATE: 11/16/2021

SEAL

NORTH CAROLINA PROFESSIONAL SEAL 044558 ENGINEER DAVID T. SEARS

DOCUMENT NOT CONSIDERED FINAL UNLESS ALL SIGNATURES COMPLETED

NSRS 2011

MATCHLINE –L– STA. 26+00 SEE SHEET PMP-2

MATCHLINE –L– STA. 40+00 SEE SHEET PMP-4

-L_LT-

-L- US 17

-L_RT-

-L_LT- STA 35+30±
4"/6" MARKING TRANSITION

-L_LT- STA 35+27±

-L_LT- STA 35+33±

-L- STA 35+11±

-L- STA 35+20±

-L_RT- STA 28+18±

-L_RT- STA 34+43±

-L- STA 35+86±

-L_LT- STA 35+76±

-L_RT- STA 35+63±

-L_RT- STA 31+42±

-L_RT- STA 31+42±

-L_RT- STA 31+42±

-L_RT- STA 31+42±

-L_RT- STA 33+85±

-Y2- STA 13+38±
4"/6" MARKING TRANSITION

-Y2- STA 12+91±

-Y2- STA 13+42±

-Y2- STA 13+30±

-Y2- STA 12+30±
BEGIN PROJECT
TIE TO EXIST.
MARKINGS

-Y2- THOMASBORO RD.

10+00

-Y1- PEA LANDING RD.

15+00

-Y1- STA 12+40±
BEGIN PROJECT
TIE TO EXIST.
MARKINGS

-Y1- STA 11+96±

-Y1- STA 11+44±

-Y1- STA 11+36±

-L_LT- STA 36+13±

-L_LT- STA 36+09±

-L_LT- STA 35+85±

-Y1- STA 11+30±
4"/6" MARKING TRANSITION

-L_LT- STA 36+53±

-L_LT- STA 36+91±

-L_LT- STA 39+53±

-L_LT- STA 39+03±

-L_RT- STA 35+62±
4"/6" MARKING TRANSITION

-L_RT- STA 35+59±

-L_RT- STA 35+29±

-L_RT- STA 35+10±

-L_RT- STA 34+77±

-L_RT- STA 34+73±

30+00 35+00 40+00

12′ 16′ 25′ 22′ 11′

PAVEMENT MARKING SCHEDULE

SYMBOL	DESCRIPTION
T2	WHITE STOPBAR (24", 90 MIL)
T6	WHITE EDGELINE (6", 90 MIL)
T7	YELLOW EDGELINE (6", 90 MIL)
T11	2 FT.-6 FT./SP WHITE MINISKIP (6", 90 MIL)
T12	2 FT.-6 FT./SP YELLOW MINISKIP (6", 90 MIL)
TA	WHITE EDGELINE (4", 90 MIL)
TB	YELLOW EDGELINE (4", 90 MIL)
TI	YELLOW DOUBLE CENTER LINE (4", 90 MIL)
TJ	10 FT. WHITE SKIP (6", 90 MIL)
TK	3 FT.-9 FT./SP WHITE MINISKIP (6", 90 MIL)
TL	WHITE SOLID LANE LINE (6", 90 MIL)
TN	WHITE GORELINE (8", 90 MIL)
TS	WHITE GORELINE (12", 90 MIL)
TU	WHITE DIAGONAL (12", 90 MIL)
UA	LEFT TURN ARROW (90 MIL)
UB	RIGHT TURN ARROW (90 MIL)
UN	YIELD LINE TRIANGLE (24", 90 MIL)
UT	U-TURN ARROW (90 MIL)
MA	PERMANENT RAISED MARKER, (YELLOW/YELLOW)
MF	SNOWPLOWABLE, (CRYSTAL/RED)

RK&K
P: (919) 878-9560
8601 Six Forks Road, Forum 1,Suite 700
Raleigh, North Carolina 27615-3960
NC License No. F-0112
Engineers | Construction Managers | Planners | Scientists
www.rkk.com
Responsive People | Creative Solutions

PAVEMENT MARKING DETAIL

11/6/2021
W5601GA_TCP_PM_PSH03.dgn
dsears

TIP NO.	SHEET NO.
W-5601GA	PMP-4

APPROVED: DocuSigned by: David T Sears 089183F28E5741E...

DATE: 11/16/2021

SEAL

NORTH CAROLINA PROFESSIONAL SEAL 044558 ENGINEER DAVID T. SEARS

DOCUMENT NOT CONSIDERED FINAL UNLESS ALL SIGNATURES COMPLETED

NSRS 2011

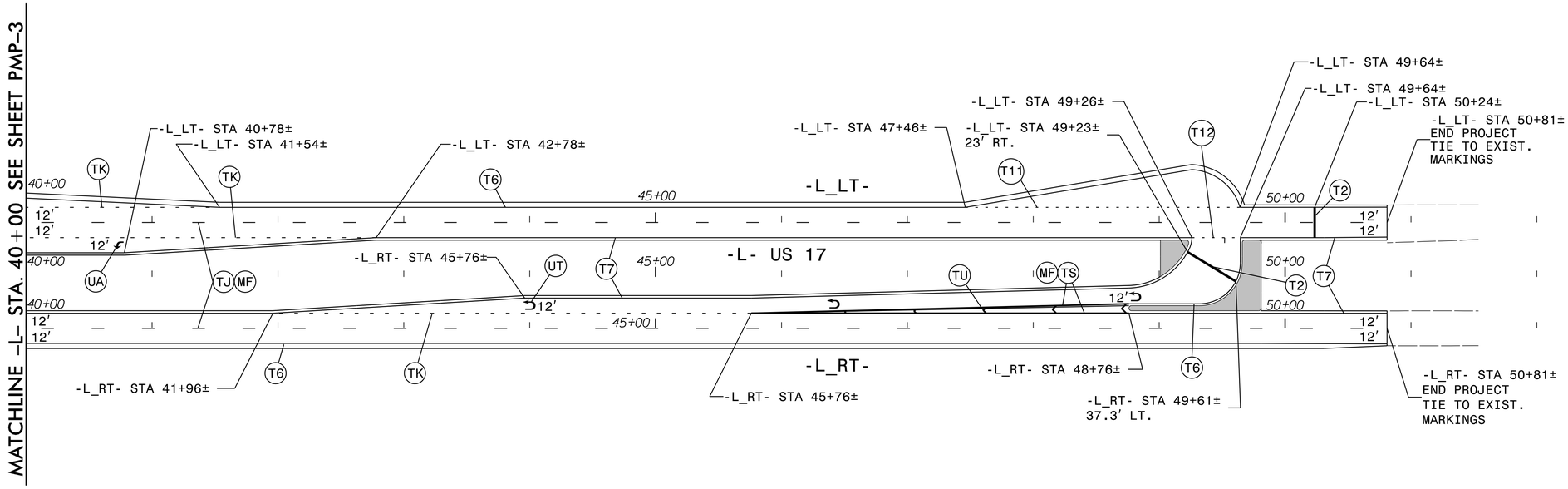

PAVEMENT MARKING SCHEDULE

SYMBOL	DESCRIPTION
T2	WHITE STOPBAR (24", 90 MIL)
T6	WHITE EDGELINE (6", 90 MIL)
T7	YELLOW EDGELINE (6", 90 MIL)
T11	2 FT.-6 FT./SP WHITE MINISKIP (6", 90 MIL)
T12	2 FT.-6 FT./SP YELLOW MINISKIP (6", 90 MIL)
TA	WHITE EDGELINE (4", 90 MIL)
TB	YELLOW EDGELINE (4", 90 MIL)
TI	YELLOW DOUBLE CENTER LINE (4", 90 MIL)
TJ	10 FT. WHITE SKIP (6", 90 MIL)
TK	3 FT.-9 FT./SP WHITE MINISKIP (6", 90 MIL)
TL	WHITE SOLID LANE LINE (6", 90 MIL)
TN	WHITE GORELINE (8", 90 MIL)
TS	WHITE GORELINE (12", 90 MIL)
TU	WHITE DIAGONAL (12", 90 MIL)
UA	LEFT TURN ARROW (90 MIL)
UB	RIGHT TURN ARROW (90 MIL)
UN	YIELD LINE TRIANGLE (24", 90 MIL)
UT	U-TURN ARROW (90 MIL)
MA	PERMANENT RAISED MARKER, (YELLOW/YELLOW)
MF	SNOWPLOWABLE, (CRYSTAL/RED)

RK&K
P: (919) 878-9560
8601 Six Forks Road, Forum 1,Suite 700
Raleigh, North Carolina 27615-3960
NC License No. F-0112
Engineers | Construction Managers | Planners | Scientists
www.rkk.com
Responsive People | Creative Solutions

PAVEMENT MARKING DETAIL

11/6/2021
W5601GA_TCP_PM_PSH04.dgn
dsears

TIP PROJECT: W-5601GA

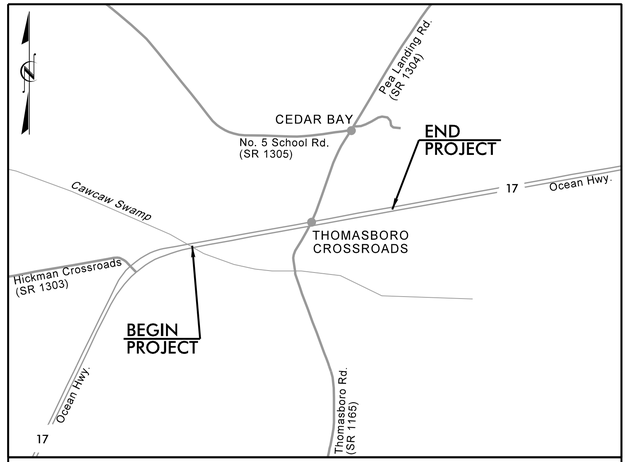

VICINITY MAP (NTS)

STATE OF NORTH CAROLINA
DIVISION OF HIGHWAYS

PLAN FOR PROPOSED
HIGHWAY EROSION CONTROL

LOCATION: US–17 AT SR 1165 (THOMASBORO ROAD)/SR1304 (PEA LANDING ROAD)

TYPE OF WORK: GRADING, DRAINAGE, PAVING, WIDENING, RESURFACING, AND SIGNALS

STATE	STATE PROJECT REFERENCE NO.	SHEET NO.	TOTAL SHEETS
N.C.	W-5601GA	EC-1	
STATE PROJ. NO.	F. A. PROJ. NO.	DESCRIPTION	
50138.1.185	HSIP-0117 (037)	PE	

NSRS 2011

1632.01	Type A	A
1632.02	Type B	B
1632.03	Type C	C
	Skimmer Basin	
	Tiered Skimmer Basin	
	Infiltration Basin	

EROSION AND SEDIMENT CONTROL MEASURES

Std. #	Description	Symbol
1630.03	Temporary Silt Ditch	TSD
1630.05	Temporary Diversion	TD
1605.01	Temporary Silt Fence	
1606.01	Special Sediment Control Fence	
1622.01	Temporary Berms and Slope Drains	
1630.02	Silt Basin Type B	
1633.01	Temporary Rock Silt Check Type-A	
	Temporary Rock Silt Check Type-A with Matting and Polyacrylamide (PAM)	
1633.02	Temporary Rock Silt Check Type-B	
	Wattle / Coir Fiber Wattle	EW CFW
	Wattle / Coir Fiber Wattle with Polyacrylamide (PAM)	
1634.01	Temporary Rock Sediment Dam Type-A	
1634.02	Temporary Rock Sediment Dam Type-B	
1635.01	Rock Pipe Inlet Sediment Trap Type-A	
1635.02	Rock Pipe Inlet Sediment Trap Type-B	
1630.04	Stilling Basin	
1630.06	Special Stilling Basin	
	Rock Inlet Sediment Trap:	

NOTES:
ANY DEVIATION FROM OPTIONS GIVEN WILL REQUIRE PRIOR APPROVAL BY ENGINEER.
ADDITIONAL EROSION CONTROL DEVICES MAY NEED TO BE INSTALLED AS DIRECTED BY THE ENGINEER.

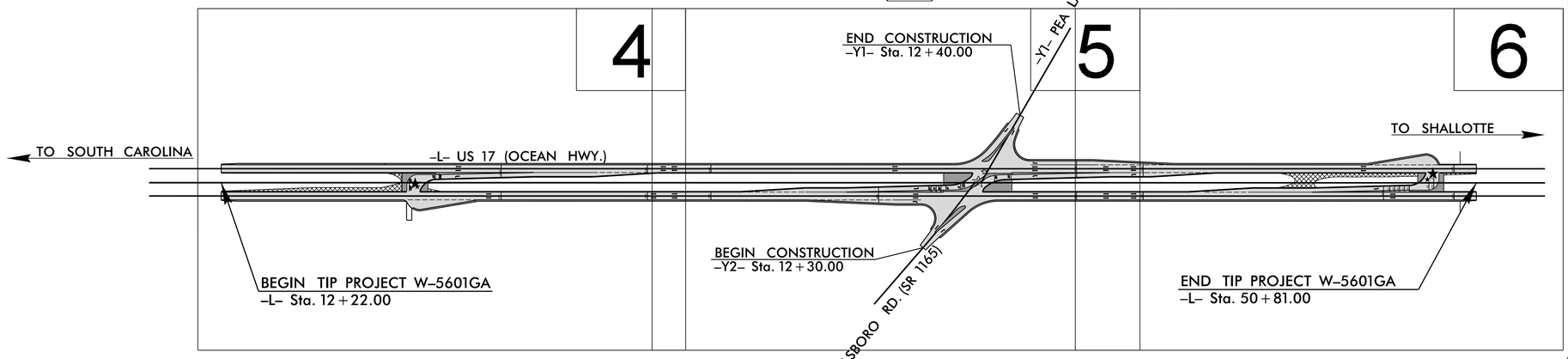

THIS PROJECT CONTAINS EROSION CONTROL PLANS FOR CLEARING AND GRUBBING PHASE OF CONSTRUCTION.

Clearing and Grubbing Phase

Final Phase

Both Phases

THE OUTSIDE BUFFER, WETLAND OR WATER BOUNDARY SHALL BE CLEARLY MARKED BY HIGHLY VISIBLE FENCING (ORANGE SAFEY FENCE)



GRAPHIC SCALES

50 25 0 50 100
PLANS

50 25 0 50 100
PROFILE (HORIZONTAL)

10 5 0 10 20
PROFILE (VERTICAL)

THESE EROSION AND SEDIMENT CONTROL PLANS COMPLY WITH THE REGULATIONS SET FORTH BY THE NCG–010000 GENERAL CONSTRUCTION PERMIT EFFECTIVE APRIL 1, 2019 AND ISSUED BY THE NORTH CAROLINA DEPARTMENT OF ENVIRONMENTAL QUALITY DIVISION OF WATER RESOURCES.

ANY DEVIATION FROM OPTIONS GIVEN WILL REQUIRE PRIOR APPROVAL BY ENGINEER.

ADDITIONAL EROSION CONTROL DEVICES MAY NEED TO BE INSTALLED AS DIRECTED BY THE ENGINEER.

Prepared In the Office of:
ROADSIDE ENVIRONMENTAL UNIT
1 South Wilmington St.
Raleigh, NC 27611

2018 STANDARD SPECIFICATIONS

LENGTH ROADWAY TIP PROJECT R–5709.....0.746 MILES
LENGTH STRUCTURE TIP PROJECT R–5709.....0 MILES
TOTAL LENGTH TIP PROJECT R–5709.....0.746 MILES

Prepared In the Office of:
RK&K
RUMMEL, KLEPPER & KAHL, LLP
8601 SIX FORKS ROAD, FORUM 1, SUITE 700
RALEIGH, NORTH CAROLINA 27615–3960
NC LICENSE NO. F-0112
1–888–521–4455 OR 919–878–9560

Courtland A. Hoffman, P.E.
EROSION CONTROL DESIGN ENGINEER
LEVEL III CERTIFICATION NO. 4312

Roadway Standard Drawings

The following roadway english standards as appear in "Roadway Standard Drawings"– Roadway Design Unit – N. C. Department of Transportation – Raleigh, N. C., dated January 2018 and the latest revison thereto are applicable to this project and by reference hereby are considered a part of these plans.

1604.01	Railroad Erosion Control Detail	1632.01	Rock Inlet Sediment Trap Type A
1605.01	Temporary Silt Fence	1632.02	Rock Inlet Sediment Trap Type B
1606.01	Special Sediment Control Fence	1632.03	Rock Inlet Sediment Trap Type C
1607.01	Gravel Construction Entrance	1633.01	Temporary Rock Silt Check Type A
1622.01	Temporary Berms and Slope Drains	1633.02	Temporary Rock Silt Check Type B
1630.01	Riser Basin	1634.01	Temporary Rock Sediment Dam Type A
1630.02	Silt Basin Type B	1634.02	Temporary Rock Sediment Dam Type B
1630.03	Temporary Silt Ditch	1635.01	Rock Pipe Inlet Sediment Trap Type A
1630.04	Stilling Basin	1635.02	Rock Pipe Inlet Sediment Trap Type B
1630.05	Temporary Diversion	1640.01	Coir Fiber Baffle
1630.06	Special Stilling Basin	1645.01	Temporary Stream Crossing
1631.01	Matting Installation		

10/14/2021
R:\Hydraulics\CADD\PSH\EC\W-5601GA_HYD_EC_tsh.dgn
default

PROJECT REFERENCE NO.	SHEET NO.
W-5601GA	EC-02
R/W SHEET NO.	
ROADWAY DESIGN ENGINEER	HYDRAULICS ENGINEER

TEMPORARY ROCK SILT CHECK TYPE 'A' WITH EXCELSIOR MATTING AND POLYACRYLAMIDE (PAM)

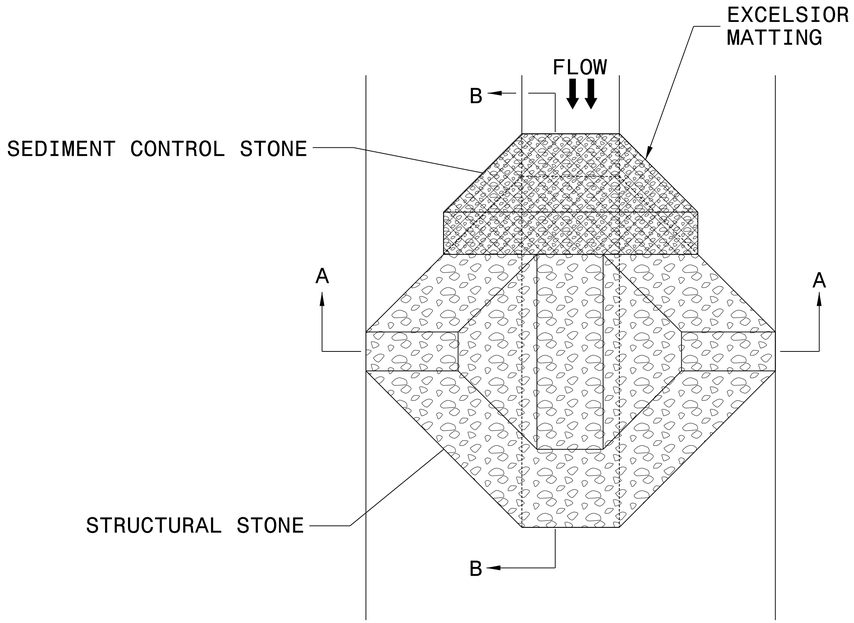

PLAN

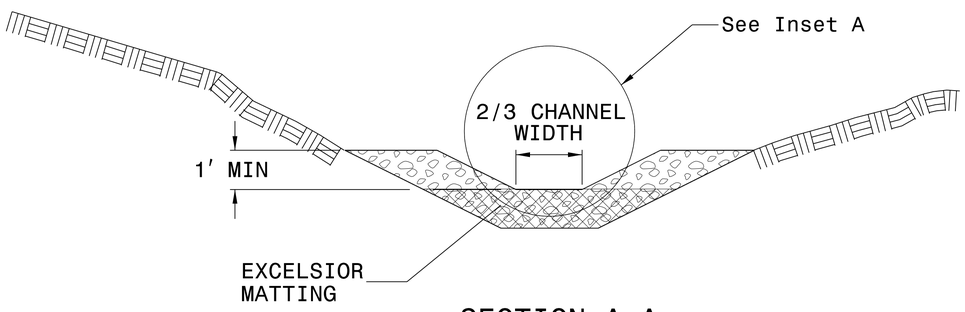

SECTION A-A

NOTES:

INSTALL TEMPORARY ROCK SILT CHECK TYPE A IN ACCORDANCE WITH ROADWAY STANDARD DRAWING NO. 1633.01.

USE EXCELSIOR FOR MATTING MATERIAL AND ANCHOR MATTING SECTION AT TOP AND BOTTOM WITH CLASS B STONE.

PRIOR TO POLYACRYLAMIDE (PAM) APPLICATION, OBTAIN A SOIL SAMPLE FROM PROJECT LOCATION, AND FROM OFFSITE MATERIAL, AND ANALYZE FOR APPROPRIATE PAM FLOCCULANT TO BE APPLIED TO EACH ROCK SILT CHECK.

INITIALLY APPLY 4 OUNCES OF POLYACRYLAMIDE (PAM) TO TOP OF MATTING SECTION AND AFTER EVERY RAINFALL EVENT THAT EQUALS OR EXCEEDS 0.50 INCHES.

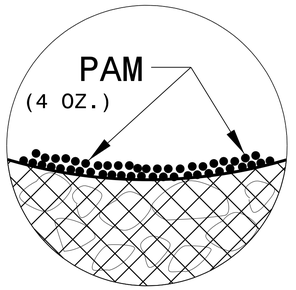

INSET A

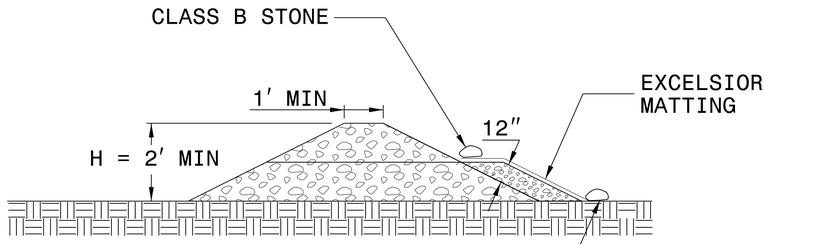

SECTION B-B

NOT TO SCALE

PROJECT REFERENCE NO.	SHEET NO.
W-5601GA	EC-02A
R/W SHEET NO.	
ROADWAY DESIGN ENGINEER	HYDRAULICS ENGINEER

COIR FIBER WATTLE WITH POLYACRYLAMIDE (PAM) DETAIL

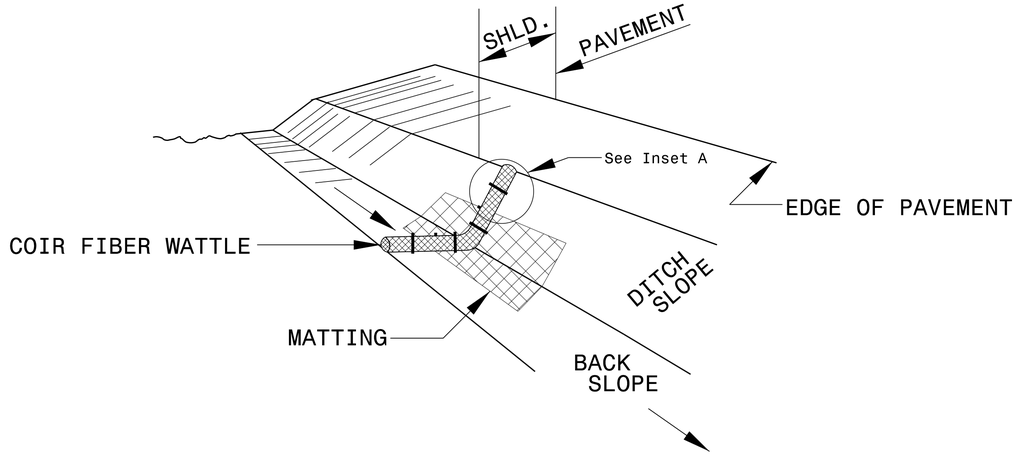

ISOMETRIC VIEW

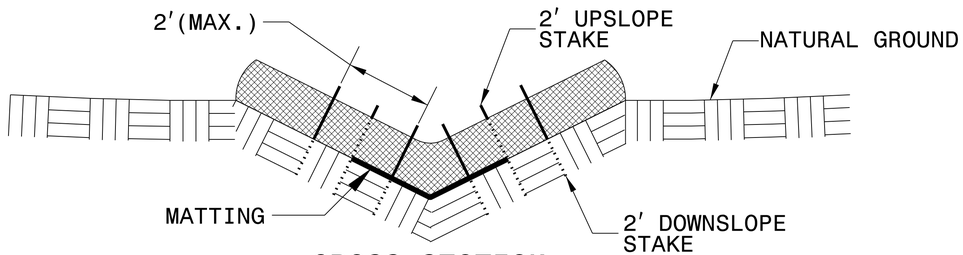

CROSS SECTION VEE DITCH

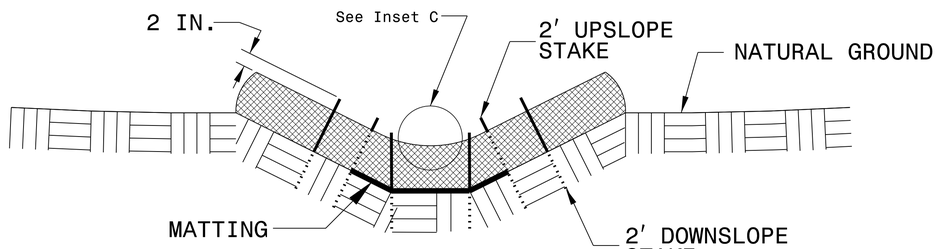

CROSS SECTION TRAPEZOIDAL DITCH

NOTES:

USE MINIMUM 12 IN. DIAMETER COIR FIBER (COCONUT FIBER) WATTLE.

USE 2 FT. WOODEN STAKES WITH A 2 IN. BY 2 IN. NOMINAL CROSS SECTION.

ONLY INSTALL WATTLE(S) TO A HEIGHT IN DITCH SO FLOW WILL NOT WASH AROUND WATTLE AND SCOUR DITCH SLOPES AND AS DIRECTED.

INSTALL A MINIMUM OF 2 UPSLOPE STAKES AND 4 DOWNSLOPE STAKES AT AN ANGLE TO WEDGE WATTLE TO BOTTOM OF DITCH.

PROVIDE STAPLES MADE OF 0.125 IN. DIAMETER STEEL WIRE FORMED INTO A U SHAPE NOT LESS THAN 12″ IN LENGTH.

INSTALL STAPLES APPROXIMATELY EVERY 1 LINEAR FOOT ON BOTH SIDES OF WATTLE AND AT EACH END TO SECURE IT TO THE SOIL.

INSTALL MATTING IN ACCORDANCE WITH SECTION 1631 OF THE STANDARD SPECIFICATIONS.

PRIOR TO POLYACRYLAMIDE (PAM) APPLICATION, OBTAIN A SOIL SAMPLE FROM PROJECT LOCATION, AND FROM OFFSITE MATERIAL, AND ANALYZE FOR APPROPRIATE PAM FLOCCULANT TO BE APPLIED TO EACH WATTLE.

INITIALLY APPLY 2 OUNCES OF ANIONIC OR NEUTRALLY CHARGED PAM OVER WATTLE WHERE WATER WILL FLOW AND 1 OUNCE OF PAM ON MATTING ON EACH SIDE OF WATTLE. REAPPLY PAM AFTER EVERY RAINFALL EVENT THAT IS EQUAL TO OR EXCEEDS 0.50 IN.

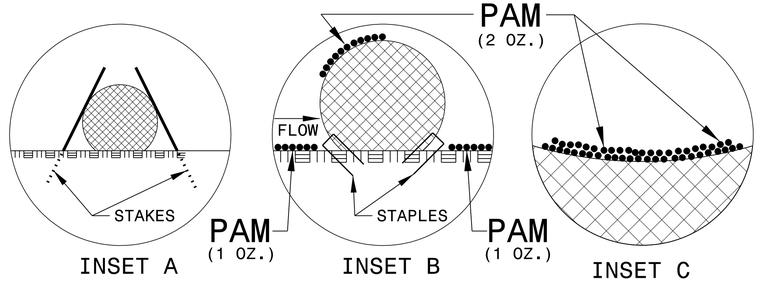

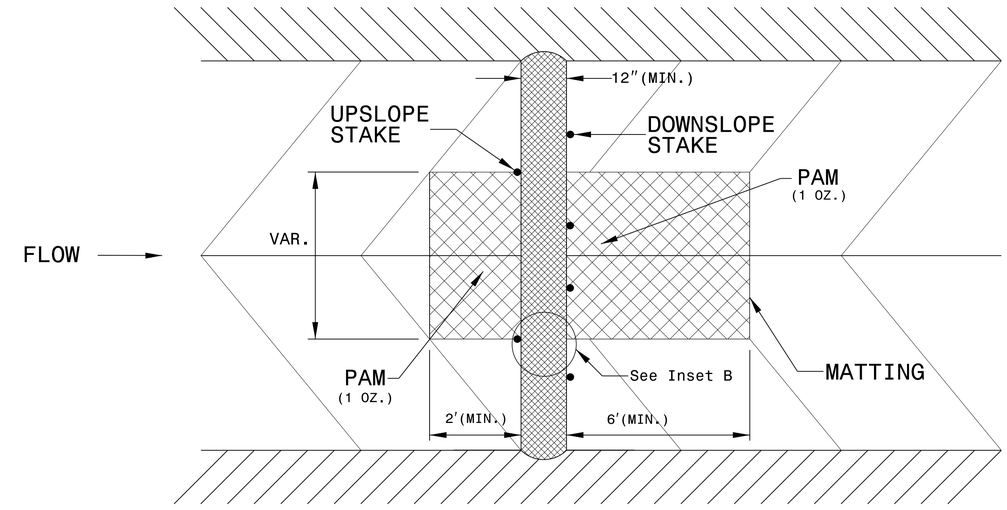

TOP VIEW

PROJECT REFERENCE NO.	SHEET NO.
W-5601GA	EC-02B
R/W SHEET NO.	
ROADWAY DESIGN ENGINEER	HYDRAULICS ENGINEER

SILT FENCE COIR FIBER WATTLE BREAK DETAIL

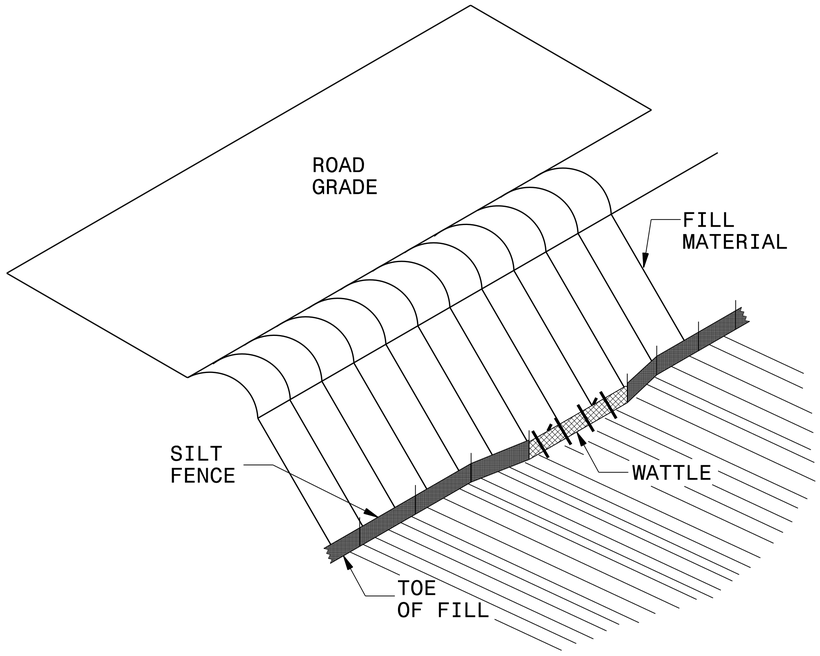

ISOMETRIC VIEW

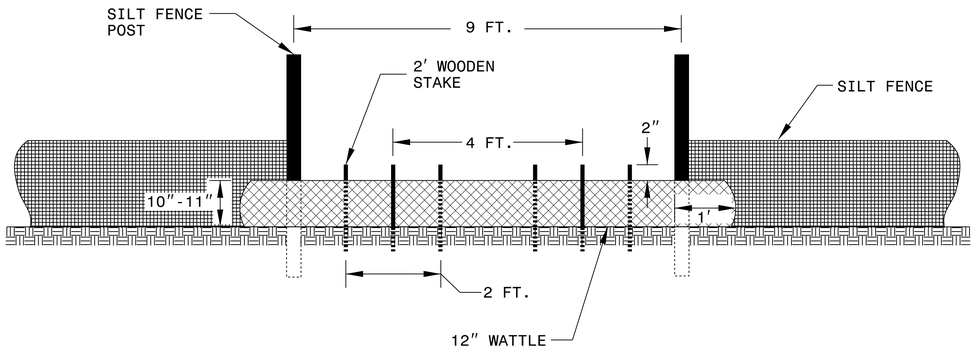

VIEW FROM SLOPE

NOTES:

USE MINIMUM 12 IN. DIAMETER COIR FIBER (COCONUT FIBER) WATTLE AND LENGTH OF 10 FT.

EXCAVATE A 1 TO 2 INCH TRENCH FOR WATTLE TO BE PLACED.

DO NOT PLACE WATTLE ON TOE OF SLOPE.

USE 2 FT. WOODEN STAKES WITH A 2 IN. BY 2 IN. NOMINAL CROSS SECTION.

INSTALL A MINIMUM OF 2 UPSLOPE STAKES AND 4 DOWNSLOPE STAKES AT AN ANGLE TO WEDGE WATTLE TO GROUND.

PROVIDE STAPLES MADE OF 0.125 IN. DIAMETER STEEL WIRE FORMED INTO A U SHAPE NOT LESS THAN 12″ IN LENGTH.

INSTALL STAPLES APPROXIMATELY EVERY 1 LINEAR FOOT ON BOTH SIDES OF WATTLE AND AT EACH END TO SECURE IT TO THE SOIL.

WATTLE INSTALLATION CAN BE ON OUTSIDE OF THE SILT FENCE AS DIRECTED.

INSTALL TEMPORARY SILT FENCE IN ACCORDANCE WITH SECTION 1605 OF THE STANDARD SPECIFICATIONS.

INSET A

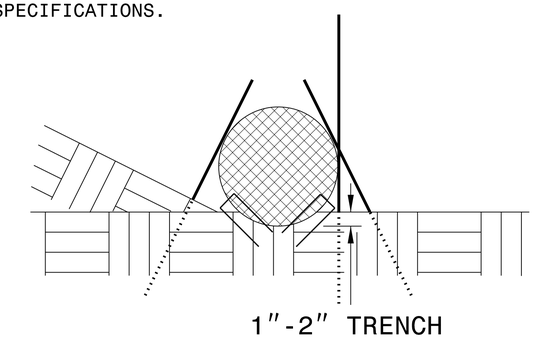

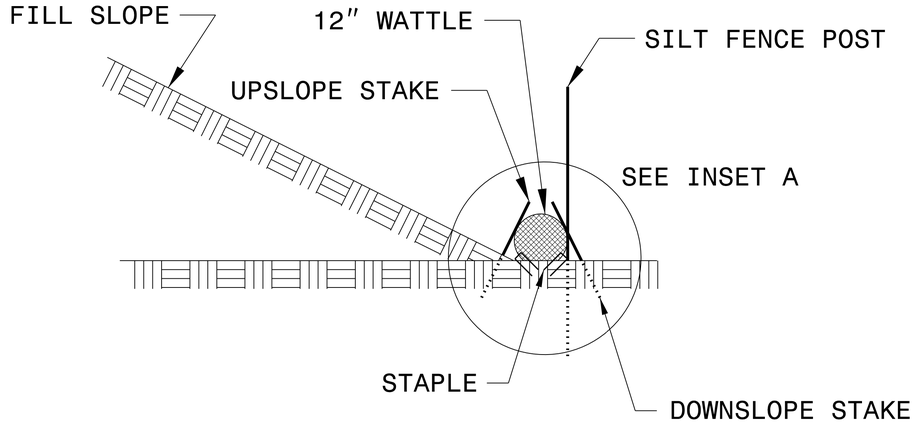

SIDE VIEW

PROJECT REFERENCE NO.	SHEET NO.
W-5601GA	EC-03
ROADWAY DESIGN ENGINEER	HYDRAULICS ENGINEER

DIVISION OF HIGHWAYS
STATE OF NORTH CAROLINA

SOIL STABILIZATION TIMEFRAMES

SITE DESCRIPTION	STABILIZATION TIME	TIMEFRAME EXCEPTIONS
PERIMETER DIKES, SWALES, DITCHES AND SLOPES	7 DAYS	NONE
HIGH QUALITY WATER (HQW) ZONES	7 DAYS	NONE
SLOPES STEEPER THAN 3:1	7 DAYS	IF SLOPES ARE 10' OR LESS IN LENGTH AND ARE NOT STEEPER THAN 2:1, 14 DAYS ARE ALLOWED.
SLOPES 3:1 OR FLATTER	14 DAYS	7 DAYS FOR SLOPES GREATER THAN 50' IN LENGTH.
ALL OTHER AREAS WITH SLOPES FLATTER THAN 4:1	14 DAYS	NONE, EXCEPT FOR PERIMETERS AND HQW ZONES.

6/2/99

PROJECT REFERENCE NO.	SHEET NO.
W-5601GA	EC-4/CONST.4
ROADWAY DESIGN ENGINEER	PAVEMENT DESIGN ENGINEER

DETAIL A
MEDIAN V DITCH
(Not to Scale)

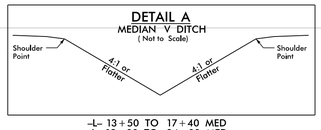

-L- 13+50 TO 17+40 MED
-L- 19+00 TO 34+00 MED

NSRS 2011

CLEARING AND GRUBBING EROSION CONTROL FOR CONSTRUCTION SHEET 04

NOTE:
PLACE TEMPORARY ROCK SEDIMENT DAMS TYPE – B AND TEMPORARY ROCK SILT CHECKS TYPE – A AT DRAINAGE OUTLETS.

THE OUTSIDE BUFFER, WETLAND OR WATER BOUNDARY SHALL BE CLEARLY MARKED BY HIGHLY VISIBLE FENCING (ORANGE SAFETY FENCE)

★ PROPOSED SIGNAL

▨ PAVEMENT REMOVAL

FOR –L_LT– & –L_RT– PROFILES SEE SHT. 7

RK&K
P: (919) 878-9560
8601 Six Forks Road, Forum 1,Suite 700
Raleigh, North Carolina 27615-3960
NC License No. F-0112
Engineers | Construction Managers | Planners | Scientists
www.rkk.com
Responsive People | Creative Solutions

8/1/2021
8:\Users\ajulics\CADD\PSHYEC\W-5601GA_HYD_EC_psh04.dgn
dgn_lib_name

PROJECT REFERENCE NO.	SHEET NO.
W-5601GA	EC-5/CONST.5
ROADWAY DESIGN ENGINEER	PAVEMENT DESIGN ENGINEER

CLEARING AND GRUBBING EROSION CONTROL FOR CONSTRUCTION SHEET 05

NOTE:
PLACE TEMPORARY ROCK SEDIMENT DAMS TYPE - B AND TEMPORARY ROCK SILT CHECKS TYPE - A AT DRAINAGE OUTLETS.

THE OUTSIDE BUFFER, WETLAND OR WATER BOUNDARY SHALL BE CLEARLY MARKED BY HIGHLY VISIBLE FENCING (ORANGE SAFETY FENCE)

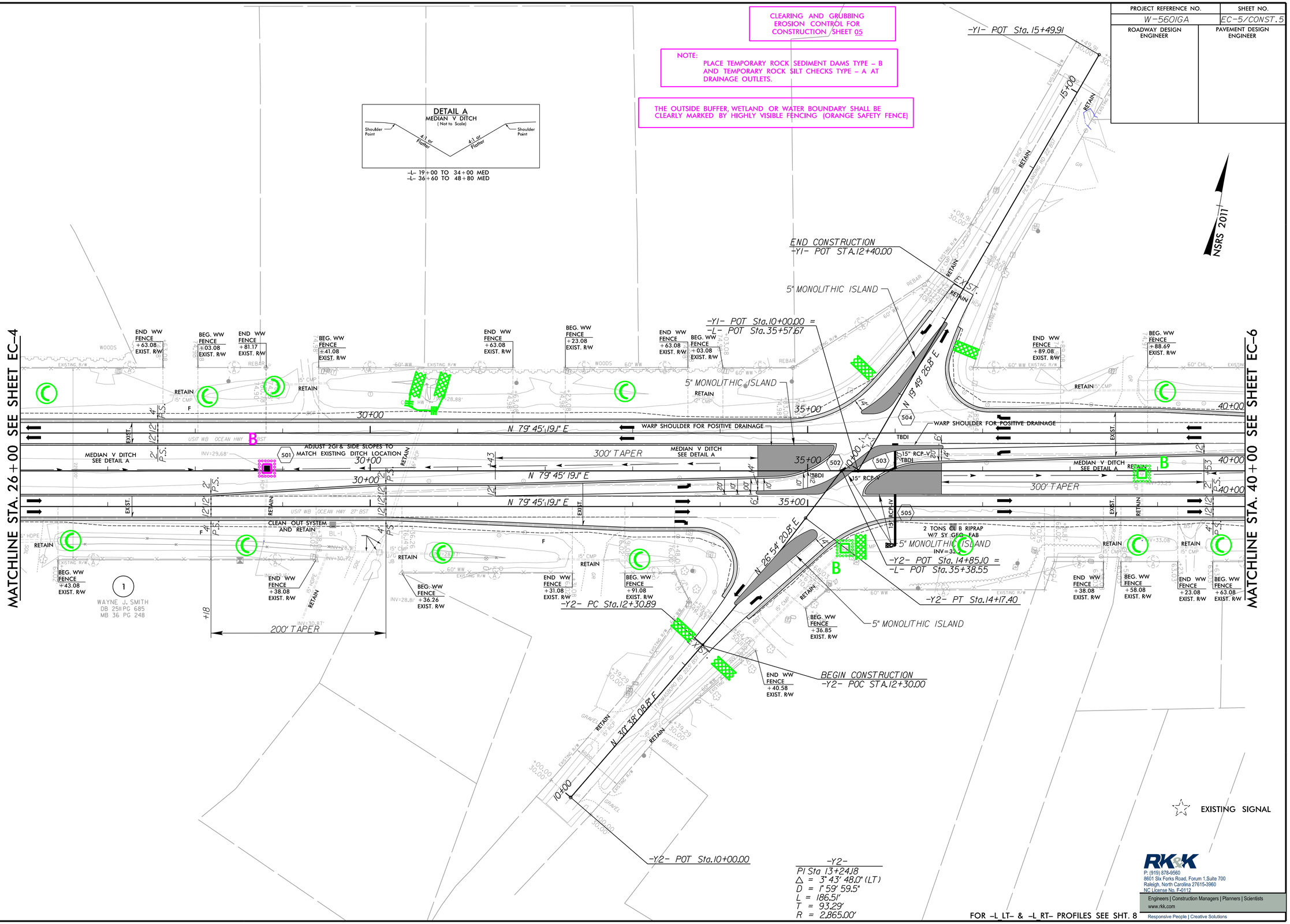

-Y2-
PI Sta 13+24.18
Δ = 3° 43' 48.0" (LT)
D = 1° 59' 59.5"
L = 186.51'
T = 93.29'
R = 2,865.00'

FOR -L LT- & -L RT- PROFILES SEE SHT. 8

RK&K
P: (919) 878-9560
8601 Six Forks Road, Forum 1,Suite 700
Raleigh, North Carolina 27615-3960
NC License No. F-0112
Engineers | Construction Managers | Planners | Scientists
www.rkk.com
Responsive People | Creative Solutions

6/2/99
8/11/2021
R:\Hydraulics\CADD\PSH\EC\W-5601GA_HYD_EC_psh05.dgn

PROJECT REFERENCE NO.	SHEET NO.
W-5601GA	EC-6/CONST.6
ROADWAY DESIGN ENGINEER	PAVEMENT DESIGN ENGINEER

THE OUTSIDE BUFFER, WETLAND OR WATER BOUNDARY SHALL BE CLEARLY MARKED BY HIGHLY VISIBLE FENCING (ORANGE SAFETY FENCE)

NOTE:
PLACE TEMPORARY ROCK SEDIMENT DAMS TYPE – B AND TEMPORARY ROCK SILT CHECKS TYPE – A AT DRAINAGE OUTLETS.

CLEARING AND GRUBBING EROSION CONTROL FOR CONSTRUCTION SHEET 06

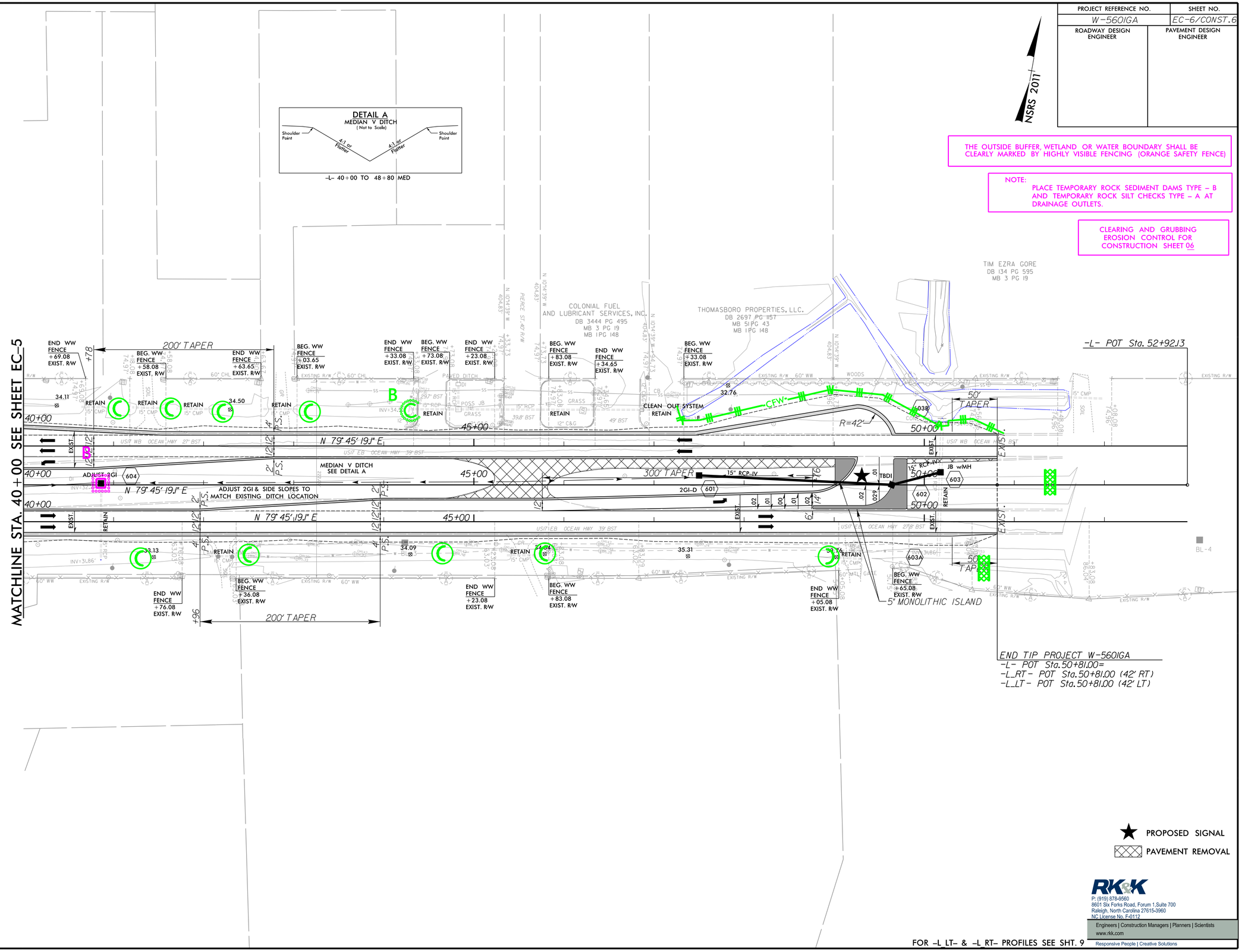

FOR -L_LT- & -L_RT- PROFILES SEE SHT. 9

RK&K
P: (919) 878-9560
8601 Six Forks Road, Forum 1,Suite 700
Raleigh, North Carolina 27615-3960
NC License No. F-0112
Engineers | Construction Managers | Planners | Scientists
www.rkk.com
Responsive People | Creative Solutions

6/2/99

8/11/2021
R:\Hydraulics\CADD\PSH\EC\W-5601GA_HYD_EC_psh06.dgn
default

6/2/99

PROJECT REFERENCE NO.	SHEET NO.
W-5601GA	EC-7/CONST. 4
ROADWAY DESIGN ENGINEER	PAVEMENT DESIGN ENGINEER

DETAIL A
MEDIAN V DITCH
(Not to Scale)

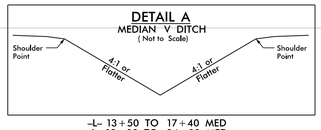

-L- 13+50 TO 17+40 MED
-L- 19+00 TO 34+00 MED

NSRS 2011

MATCHLINE STA. 26+00 SEE SHEET EC-8

WOODS
END WW FENCE +83.08 EXIST. R/W
BEG. WW FENCE +13.08 EXIST. R/W
RETAIN
15" CMP
INV=25.33'
INV=25.25'
CONC. WW
MTL
15+00
EXIST.
RETAIN
60" WW
EXISTING R/W
USI7 WB OCEAN HWY 27.3' BST
MEDIAN V DITCH SEE DETAIL A
402
15+00
ADJUST 2GI & SIDE SLOPES TO MATCH EXISTING DITCH LOCATION
15" RCP-V
15+00
RETAIN
USI7 EB OCEAN HWY 39.56' BST
50' TAPER
MTL
CONC. WW
INV=25.63'
INV=25.75'
60" WW
EXISTING R/W
+83.08 75.00'
CAW CAW SWAMP WATERSHED EASEMENT MB 36 PG 248
END WW FENCE +87.08 EXIST. R/W
BEG. WW FENCE +17.08 EXIST. R/W
RETAIN
15" CMP
5" MONOLITHIC ISLAND
20+00
CFW
WARP SHOULDER FOR POSITIVE DRAINAGE
405
TBDI
404
TBDI
TBDI
TBDI
15" RCP-V
401
407
20+00
N 79° 45' 19.1" E
MEDIAN V DITCH SEE DETAIL A
403
ADJUST 2GI & SIDE SLOPES TO MATCH EXISTING DITCH LOCATION
300' TAPER
20+00
N 79° 45' 19.1" E
RETAIN
EXIST.
R=42'
R=5'
R=10'
16'
11 TONS CL B RIP-RAP W/28 SY GEO
REMOVE
36"
406
END WW FENCE +72.08 EXIST. R/W
WAYNE J. SMITH DB 2511 PG 685 MB 36 PG 248
1
BEG. WW FENCE +32.08 EXIST. R/W
INV=25.32'
INV=26.38'
INV=27.43'
POND
+63 200' TAPER
END WW FENCE +03.08 EXIST. R/W
BEG. WW FENCE +63.08 EXIST. R/W
RETAIN
30" RCP
25+00
25+00
25+00
END WW FENCE +83.08 EXIST. R/W
+83.85 62.23'
+34.08 75.01'
2' P.S.
4' P.S.
2 1/2 2 1/2

BEGIN TIP PROJECT W-5601GA
-L- POT Sta.12+22.00=
-L_RT- POT Sta.12+22.00 (42' RT)
-L_LT- POT Sta.12+22.00 (42' LT)

★ PROPOSED SIGNAL
PAVEMENT REMOVAL

FOR -L_LT- & -L_RT- PROFILES SEE SHT. 7

RK&K
P: (919) 878-9560
8601 Six Forks Road, Forum 1,Suite 700
Raleigh, North Carolina 27615-3960
NC License No. F-0112
Engineers | Construction Managers | Planners | Scientists
www.rkk.com
Responsive People | Creative Solutions

8/1/2021
R:\Projects\Roadways\CADD\PSH\EC\W-5601GA_HYD_EC_psh07.dgn
default

PROJECT REFERENCE NO.	SHEET NO.
W-5601GA	EC-8/CONST.5
ROADWAY DESIGN ENGINEER	PAVEMENT DESIGN ENGINEER

6/2/99

2018 ADT
2040 ADT

-Y1- PEA LANDING RD. (SR 1364)

3,025
6,150

17 21,850 43,500 — 21,850 43,500 17

4,700
9,850

-Y2- THOMASBORO RD. (SR 1165)

PROJECTED TRAFFIC VOLUMES

DETAIL A
MEDIAN V DITCH
(Not to Scale)

Shoulder Point — 4:1 or Flatter — 4:1 or Flatter — Shoulder Point

-L- 19+00 TO 34+00 MED
-L- 36+60 TO 48+80 MED

NSRS 2011

MATCHLINE STA. 26+00 SEE SHEET EC-7

MATCHLINE STA. 40+00 SEE SHEET EC-9

-Y1- POT Sta. 15+49.91

END CONSTRUCTION
-Y1- POT STA.12+40.00

5" MONOLITHIC ISLAND

-Y1- POT Sta. 10+00.00 =
-L- POT Sta. 35+57.67

5" MONOLITHIC ISLAND

N 19° 49' 26.8" E

N 79° 45' 19.1" E

WARP SHOULDER FOR POSITIVE DRAINAGE

300' TAPER

MEDIAN V DITCH SEE DETAIL A

ADJUST 2GI & SIDE SLOPES TO MATCH EXISTING DITCH LOCATION

CLEAN OUT SYSTEM AND RETAIN

2 TONS CLASS B RIPRAP W/7 SY GEOFAB

5" MONOLITHIC ISLAND

-Y2- PT Sta.14+17.40

-Y2- PC Sta.12+30.89

-Y2- PI Sta 13+24.18
Δ = 3° 43' 48.0" (LT)
D = 1° 59' 59.5"
L = 186.51'
T = 93.29'
R = 2,865.00'

N 26° 54' 20.8" E

N 30° 38' 08.8" E

BEGIN CONSTRUCTION
-Y2- POC STA.12+30.00

-Y2- POT Sta.10+00.00

WAYNE J. SMITH
DB 2511 PG 685
MB 36 PG 248

200' TAPER

EXISTING SIGNAL

FOR -L LT- & -L RT- PROFILES SEE SHT. 8

RK&K
P: (919) 878-9560
8601 Six Forks Road, Forum 1,Suite 700
Raleigh, North Carolina 27615-3960
NC License No. F-0112
Engineers | Construction Managers | Planners | Scientists
www.rkk.com
Responsive People | Creative Solutions

8/4/2021
8:44:19 AM
dgn: c:\projects\CADD\PSHs\EC\w-5601GA_HYD_EC_psh08.dgn

6/2/99

PROJECT REFERENCE NO.	SHEET NO.
W-5601GA	EC-9/CONST.6
ROADWAY DESIGN ENGINEER	PAVEMENT DESIGN ENGINEER

NSRS 2011

DETAIL A
MEDIAN V DITCH
(Not to Scale)

Shoulder Point — 4:1 or Flatter — 4:1 or Flatter — Shoulder Point

-L- 40+00 TO 48+80 MED

MATCHLINE STA. 40+00 SEE SHEET EC-8

SEE SHEET EC-10 MATCHLINE STA. 50+00

COLONIAL FUEL AND LUBRICANT SERVICES, INC.
DB 3444 PG 495
MB 3 PG 19
MB 1PG 148

THOMASBORO PROPERTIES, LLC.
DB 2697 PG 1157
MB 51PG 43
MB 1PG 148

TIM EZRA GORE
DB 134 PG 595
MB 3 PG 19

-L- POT Sta. 52+92.13

END WW FENCE +69.08 EXIST. R/W
BEG. WW FENCE +58.08 EXIST. R/W
END WW FENCE +63.65 EXIST. R/W
BEG. WW FENCE +03.65 EXIST. R/W
END WW FENCE +33.08 EXIST. R/W
BEG. WW FENCE +73.08 EXIST. R/W
END WW FENCE +23.08 EXIST. R/W
BEG. WW FENCE +83.08 EXIST. R/W
END WW FENCE +34.65 EXIST. R/W
BEG. WW FENCE +33.08 EXIST. R/W

200' TAPER
RETAIN
CLEAN OUT SYSTEM
CFW
50' TAPER
R=42'
40+00
45+00
50+00
N 79° 45' 19.1" E
ADJUST 2GI
ADJUST 2GI & SIDE SLOPES TO MATCH EXISTING DITCH LOCATION
MEDIAN V DITCH SEE DETAIL A
300' TAPER
15" RCP-IV
JB w/MH
2GI-D
TBD
END WW FENCE +76.08 EXIST. R/W
BEG. WW FENCE +36.08 EXIST. R/W
END WW FENCE +23.08 EXIST. R/W
BEG. WW FENCE +83.08 EXIST. R/W
END WW FENCE +05.08 EXIST. R/W
BEG. WW FENCE +65.08 EXIST. R/W
5' MONOLITHIC ISLAND
200' TAPER
50' TAP

END TIP PROJECT W-5601GA
-L- POT Sta.50+81.00=
-L_RT- POT Sta.50+81.00 (42' RT)
-L_LT- POT Sta.50+81.00 (42' LT)

★ PROPOSED SIGNAL
▨ PAVEMENT REMOVAL

RK&K
P: (919) 878-9560
8601 Six Forks Road, Forum 1,Suite 700
Raleigh, North Carolina 27615-3960
NC License No. F-0112
Engineers | Construction Managers | Planners | Scientists
www.rkk.com
Responsive People | Creative Solutions

FOR -L_LT- & -L_RT- PROFILES SEE SHT. 9

8/4/2021
C:\Users\dpulliam\Documents\projects\CADD\PSH\EC\w-5601GA_HYD_EC_psh09.dgn
default

TIP PROJECT: W-5601GA

CONTRACT: DC00326

STATE OF NORTH CAROLINA
DEPARTMENT OF TRANSPORTATION

BRUNSWICK COUNTY
SIGNING PLAN

LOCATION: US 17 at SR 1165 (Thomasboro Rd)/SR 1304 (Pea Landing Rd)

PROJECT REFERENCE NO.	SHEET NO.
W-5601GA	SIGN-1

APPROVED: DocuSigned by: David T Sears 069183F28E5741E...

DATE: 11/16/2021

SEAL

NORTH CAROLINA PROFESSIONAL SEAL 044558 ENGINEER DAVID T SEARS

DOCUMENT NOT CONSIDERED FINAL UNLESS ALL SIGNATURES COMPLETED

ROADWAY STANDARD DRAWINGS

THE FOLLOWING ROADWAY STANDARDS AS APPEAR IN "ROADWAY STANDARD DRAWINGS" - PROJECT SERVICES UNIT - N.C. DEPARTMENT OF TRANSPORTATION - RALEIGH, N.C., DATED JANUARY 2018 ARE APPLICABLE TO THIS PROJECT AND BY REFERENCE HEREBY ARE CONSIDERED A PART OF THESE PLANS:

STD. NO.	TITLE
904.10	ORIENTATION OF GROUND MOUNTED SIGNS
904.40	MILEPOST AND PLACEMENT
904.50	MOUNTING OF TYPE 'D', 'E', AND 'F' SIGNS ON 'U' CHANNEL POSTS
910.30	SIGNING SIGNALIZED SUPERSTREET
1264.01	OBJECT MARKERS - TYPES
1264.02	OBJECT MARKERS - INSTALLATION

GENERAL NOTES

. SIGNS FURNISHED BY STATE

. CONFIRM IN WRITING AT LEAST 4 MONTHS IN ADVANCE, THE ACTUAL DATE THE DEPARTMENT FURNISHED SIGNS WILL BE REQUIRED.

. ALL TYPE 'D' SIGNS SHALL BE MOUNTED ON TWO U-CHANNEL POSTS UNLESS OTHERWISE INDICATED ON THE PLANS.

. IF REMOVAL OR RELOCATION OF SIGNS ON PRIVATE STREET (NON-STATE MAINTAINED) IS REQUIRED DUE TO CONSTRUCTION, THE CONTRACTOR SHALL INFORM THE ENGINEER. THE WORK WILL BE COMPLETED BY OTHERS.

. WHEN NOT STATIONED OR DIMENSIONED ON PLANS, ALL 'E' AND 'F' SIGNS SHALL BE FIELD LOCATED BY THE ENGINEER

. ALL EXISTING SIGNS ON "U" CHANNEL POST WITHIN THE PROJECT LIMITS SHALL BE REMOVED AND DISPOSED OF UNLESS OTHERWISE NOTED ON PLANS.

. WHEN EXISTING SIGNS ARE REMOVED AND INSTALLED ON NEW SUPPORTS, THE RE-ERECTION SHALL IMMEDIATELY FOLLOW THE REMOVAL.

. THE BACKGROUND FOR TYPE E & F SIGNS SHALL BE TYPE C REFLECTIVE SHEETING.

SUMMARY OF QUANTITIES

ITEM NO.		ITEM DESCRIPTION	QUANTITY	UNIT
DESC. NO.	SECT. NO.			
4072000000	903	SUPPORTS, 3 LB STEEL U-CHANNEL	525	L.F.
4078000000	903	SUPPORTS, 2 LB STEEL U-CHANNEL	2	EA.
4096000000	904	SIGN ERECTION, TYPE D	6	EA.
4102000000	904	SIGN ERECTION, TYPE E	16	EA.
4108000000	904	SIGN ERECTION, TYPE F	4	EA.
4114000000	904	SIGN ERECTION, MILEMARKERS	2	EA.
4155000000	907	DISPOSAL OF SIGN SYSTEM, U-CHANNEL	36	EA.
4360000000	SP	END OF MEDIAN MARKER	6	EA.

PROJECT NOTES

1. SIGN ERECTION, TYPE D, E, AND F
2. SIGN ERECTION, MILEMARKERS

INDEX

SHEET NO.	DESCRIPTION
SIGN-1	TITLE SHEET
SIGN-3	E, F AND MILEMARKER SHEET
SIGN-4 THRU SIGN-4A	SIGN DESIGNS
SIGN-5 THRU SIGN-7A	SIGN DETAIL SHEETS

PLAN PREPARED FOR: NCDOT DIVISION 3

Jessi Leonard, PE — DIVISION 3 TRAFFIC ENGINEER

Ayman I. Alqudwah, PE — SIGNING & DELINEATION PROJECT REGIONAL ENGINEER

STATE OF NORTH CAROLINA DEPARTMENT OF TRANSPORTATION

PLAN PREPARED BY:

David Sears, PE, PTOE — PROJECT ENGINEER

Allen Tutt — SR. DESIGNER

RK&K

P: (919) 878-9560
8601 Six Forks Road Suite 700 | Raleigh, North Carolina 27615-2965
NC License No. F-0112

Engineers | Construction Managers | Planners | Scientists
www.rkk.com

Responsive People | Creative Solutions

11/16/2021
W-5601GA_SGN_PSH01.dgn
dsears

TIP NO.	SHEET NO.
W-5601GA	SIGN-3

APPROVED: DocuSigned by: David T Sears 069183F28E5741E...

DATE: 11/16/2021

SEAL

NORTH CAROLINA PROFESSIONAL SEAL 044558 ENGINEER DAVID T. SEARS

DOCUMENT NOT CONSIDERED FINAL UNLESS ALL SIGNATURES COMPLETED

401 QUANTITY REQ'D 2



R6-1L
54"X18"

TWO "U" POSTS PER SIGN

402 QUANTITY REQ'D 4

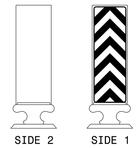

OM-3C
12"X36"

END OF MEDIAN MARKER
WITH TYPE IV REFLECTIVE SHEETING
OM3-C DECAL
(OR APPROVED EQUIVALENT)

PAID FOR AS "END OF MEDIAN MARKER"
SEE SPECIAL PROVISIONS

403 QUANTITY REQ'D 2



R2-1
36"X48"

TWO "U" POSTS PER SIGN

404 QUANTITY REQ'D 2



R1-2
36"X36"X36"

ONE "U" POST PER SIGN

405 QUANTITY REQ'D 2

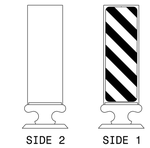

OM-3L
12"X36"

END OF MEDIAN MARKER
WITH TYPE IV REFLECTIVE SHEETING
OM3-L DECAL
(OR APPROVED EQUIVALENT)

PAID FOR AS "END OF MEDIAN MARKER"
SEE SPECIAL PROVISIONS

406 QUANTITY REQ'D 4



R3-4
36"X36"

ONE "U" POST PER SIGN

501



M3-3
24"X12"

M1-4
24"X24"

ONE "U" POST

502



M3-1
24"X12"

M1-4
24"X24"

SEE SIGN-4A
21"X21"

ONE "U" POST

503



M3-1
24"X12"

M1-4
24"X24"

SEE SIGN-4A
21"X21"

ONE "U" POST

504



M3-1
24"X12"

M1-4
24"X24"

ONE "U" POST

QUANTITY REQ'D 2



D10-1
12"X24"

ONE "U" POST PER SIGN

RK&K
P: (919) 878-9560
8601 Six Forks Road, Forum 1,Suite 700
Raleigh, North Carolina 27615-3960
NC License No. F-0112
Engineers | Construction Managers | Planners | Scientists
www.rkk.com
Responsive People | Creative Solutions

11/16/21
W-5601GA_SGN_PSH03.dgn
dsears

TYPE 'E' SIGNS, 'F' SIGNS,
AND MILE MARKERS

TIP NO.	SHEET NO.
W-5601GA	SIGN-4

APPROVED: DocuSigned by: David T Sears 0901B3F28E5741E... 11/16/2021

DATE:

SEAL

NORTH CAROLINA PROFESSIONAL SEAL 044558 ENGINEER DAVID T. SEARS

DOCUMENT NOT CONSIDERED FINAL UNLESS ALL SIGNATURES COMPLETED

SIGN NUMBER: 301
TYPE: D
QUANTITY: 1
SIGN WIDTH: 6'-0"
HEIGHT: 4'-0"
TOTAL AREA: 24.0 Sq.Ft.
BORDER TYPE: FLUSH
RECESS: 0"
WIDTH: 1"
RADII: 6"
NO. Z BARS:
LENGTH:

BACKG COLOR: Green
COPY COLOR: White

SYMBOL	X	Y	WID	HT

MAT'L: 0.125" (3.2 mm) ALUMINUM

USE NOTES: 1,2

1. Legend and border(except those that are colored black) shall be direct applied Grade C sheeting.
2. Background shall be Grade C reflective sheeting.

DESIGN BY: K. Bisby CHECKED BY: D. Sears Aug 10, 2017
PROJECT ID: W-5601GA LOCATION: -L- STA 24+00 DIV: 3

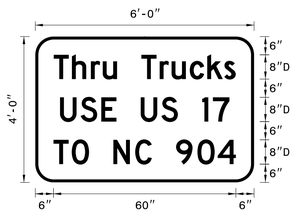

Spacing Factor is 1 unless specified otherwise

LETTER POSITIONS

Letter spacings are to start of next letter

															Series/Size Text Length
		T	h	r	u		T	r	u	c	k	s			D 2000
	6	6	6.2	3.9	4.7	8	6	3.9	6	5.8	5.6	3.8	6		59.9
		U	S	E		U	S		1	7					D 2000
	8.1	6.8	6.8	5	8	6.8	5.4	8	3.5	5.4	8.1				55.8
		T	O		N	C		9	O	4					D 2000
	6	6	5.7	8	7.2	5.4	8	7	6.6	6	6				60

FILENAME: W-5601GA_SGN_DESIGNS

NORTH CAROLINA D.O.T. SIGN DETAIL

SIGN NUMBER: 302
TYPE: D
QUANTITY: 1
SIGN WIDTH: 4'-6"
HEIGHT: 4'-0"
TOTAL AREA: 18.0 Sq.Ft.
BORDER TYPE: FLUSH
RECESS: 0"
WIDTH: 0.75"
RADII: 6"
NO. Z BARS:
LENGTH:

BACKG COLOR: Green
COPY COLOR: White

SYMBOL	X	Y	WID	HT
AR_Type D	23.3	4.2	5	7.5

MAT'L: 0.125" (3.2 mm) ALUMINUM

USE NOTES: 1,2

1. Legend and border(except those that are colored black) shall be direct applied Grade C sheeting.
2. Background shall be Grade C reflective sheeting.

DESIGN BY: K. Bisby CHECKED BY: D. Sears Sep 24, 2021
PROJECT ID: W-5601GA LOCATION: -L- STA. 29+00 DIV: 3



Spacing Factor is 1 unless specified otherwise

LETTER POSITIONS

Letter spacings are to start of next letter

															Series/Size Text Length
		J	E	S	S	I	E		M	A	E				D 2000
	7.5	4.4	3.6	3.9	4.3	2	3.1	5	4.7	5	3.1	7.5			39
		M	O	N	R	O	E								D 2000
	13.9	5	4.6	4.6	4.1	4.6	3.1	13.9							26.2
		E	L	E	M	E	N	T	A	R	Y				D 2000
	6.3	4	3.8	4	5.1	4	4.1	3.4	5	3.8	4.3	6.3			41.5
		S	C	H	O	O	L								D 2000
	14.3	4.2	4.5	4.5	4.5	4.7	3.1	14.3							25.5

FILENAME: W-5601GA_SGN_DESIGNS

NORTH CAROLINA D.O.T. SIGN DETAIL

SIGN NUMBER: 303
TYPE: D
QUANTITY: 1
SIGN WIDTH: 6'-6"
HEIGHT: 2'-0"
TOTAL AREA: 13.0 Sq.Ft.
BORDER TYPE: FLUSH
RECESS: 0"
WIDTH: 1"
RADII: 3"
NO. Z BARS:
LENGTH:

BACKG COLOR: Green
COPY COLOR: White

SYMBOL	X	Y	WID	HT
AR_Type D	58	8	8	12

MAT'L: 0.125" (3.2 mm) ALUMINUM

USE NOTES: 1,2

1. Legend and border(except those that are colored black) shall be direct applied Grade C sheeting.
2. Background shall be Grade C reflective sheeting.

DESIGN BY: K. Bisby CHECKED BY: D. Sears Aug 10, 2017
PROJECT ID: W-5601GA LOCATION: -L- STA 32+00 DIV: 3

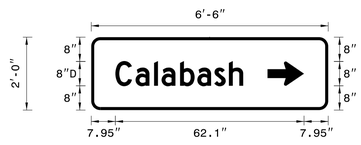

Spacing Factor is 1 unless specified otherwise

LETTER POSITIONS

Letter spacings are to start of next letter

											Series/Size Text Length
		C	a	l	a	b	a	s	h		D 2000
	8	6.6	6.1	2.5	6.1	5.7	5.6	4.8	4.7	28	42.1

FILENAME: W-5601GA_SGN_DESIGNS

NORTH CAROLINA D.O.T. SIGN DETAIL

SIGN NUMBER: 304
TYPE: D
QUANTITY: 1
SIGN WIDTH: 4'-6"
HEIGHT: 4'-0"
TOTAL AREA: 18.0 Sq.Ft.
BORDER TYPE: FLUSH
RECESS: 0"
WIDTH: 0.75"
RADII: 6"
NO. Z BARS:
LENGTH:

BACKG COLOR: Green
COPY COLOR: White

SYMBOL	X	Y	WID	HT
AR_Type D	23.3	4.2	5	7.5

MAT'L: 0.125" (3.2 mm) ALUMINUM

USE NOTES: 1,2

1. Legend and border(except those that are colored black) shall be direct applied Grade C sheeting.
2. Background shall be Grade C reflective sheeting.

DESIGN BY: K. Bisby CHECKED BY: D. Sears Sep 24, 2021
PROJECT ID: W-5601GA LOCATION: -L- STA. 39+00 DIV: 3



Spacing Factor is 1 unless specified otherwise

LETTER POSITIONS

Letter spacings are to start of next letter

															Series/Size Text Length
		J	E	S	S	I	E		M	A	E				D 2000
	7.5	4.4	3.6	3.9	4.3	2	3.1	5	4.6	5	3.1	7.5			39
		M	O	N	R	O	E								D 2000
	13.9	5	4.6	4.6	4.1	4.6	3.1	13.9							26.2
		E	L	E	M	E	N	T	A	R	Y				D 2000
	6.3	3.9	3.9	4	5.1	4	4.1	3.4	5	3.8	4.3	6.3			41.5
		S	C	H	O	O	L								D 2000
	14.3	4.2	4.5	4.5	4.5	4.6	3.1	14.3							25.5

FILENAME: W-5601GA_SGN_DESIGNS

NORTH CAROLINA D.O.T. SIGN DETAIL

RK&K
P: (919) 878-9560
8601 Six Forks Road, Forum 1,Suite 700
Raleigh, North Carolina 27615-3960
NC License No. F-0112
Engineers | Construction Managers | Planners | Scientists
www.rkk.com
Responsive People | Creative Solutions

11/16/21
W-5601GA_SGN_PSH04.dgn
dsears

SIGN DESIGNS

TIP NO.	SHEET NO.
W-5601GA	SIGN-4A

APPROVED: DocuSigned by: David T Sears 2601B3F28E5741E...

DATE: 11/16/2021

SEAL

NORTH CAROLINA PROFESSIONAL SEAL 044558 ENGINEER DAVID T. SEARS

DOCUMENT NOT CONSIDERED FINAL UNLESS ALL SIGNATURES COMPLETED

SIGN NUMBER: 305 | BACKG COLOR: Green | COPY COLOR: White

TYPE: D

QUANTITY: 1

SIGN WIDTH: 4′-6″
HEIGHT: 1′-6″
TOTAL AREA: 6.8 Sq.Ft.

BORDER TYPE: FLUSH
RECESS: 0″
WIDTH: 0.75″
RADII: 2.25″

NO. Z BARS:
LENGTH:

SYMBOL	X	Y	WID	HT

MAT'L: 0.125″ (3.2 mm) ALUMINUM

DESIGN BY: K. Bisby | CHECKED BY: D. Sears | Sep 27, 2021

PROJECT ID: W-5601GA | LOCATION: -Y2- STA. 12+90 | DIV: 3

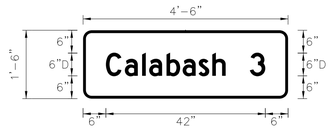

Spacing Factor is 1 unless specified otherwise

USE NOTES: 1,2

1. Legend and border(except those that are colored black) shall be direct applied Grade C sheeting.
2. Background shall be Grade C reflective sheeting.

LETTER POSITIONS

Letter spacings are to start of next letter

		C	a	l	a	b	a	s	h		3		Series/Size Text Length
	6	5	4.6	1.9	4.6	4.3	4.2	3.6	3.5	6.4	4.1	6	D 2000
													42

FILENAME: W-5601GA_SGN_DESIGNS

NORTH CAROLINA D.O.T. SIGN DETAIL

SIGN NUMBER: 306 | BACKG COLOR: Green | COPY COLOR: White

TYPE: D

QUANTITY: 1

SIGN WIDTH: 6′-6″
HEIGHT: 2′-0″
TOTAL AREA: 13.0 Sq.Ft.

BORDER TYPE: FLUSH
RECESS: 0″
WIDTH: 1″
RADII: 3″

NO. Z BARS:
LENGTH:

SYMBOL	X	Y	WID	HT
AR_Type D	8	8	8	12

MAT'L: 0.125″ (3.2 mm) ALUMINUM

DESIGN BY: K. Bisby | CHECKED BY: D. Sears | Aug 10, 2017

PROJECT ID: W-5601GA | LOCATION: -L- STA 42+00 | DIV: 3

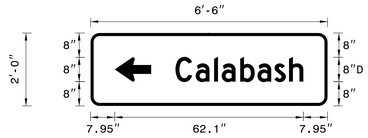

Spacing Factor is 1 unless specified otherwise

USE NOTES: 1,2

1. Legend and border(except those that are colored black) shall be direct applied Grade C sheeting.
2. Background shall be Grade C reflective sheeting.

LETTER POSITIONS

Letter spacings are to start of next letter

	C	a	l	a	b	a	s	h		Series/Size Text Length
28	6.6	6.1	2.5	6.1	5.7	5.6	4.8	4.7	8	D 2000
										42.1

FILENAME: W-5601GA_SGN_DESIGNS

NORTH CAROLINA D.O.T. SIGN DETAIL

SIGN NUMBER: SEE SIGN-3 | BACKG COLOR: White | COPY COLOR: Black

TYPE: F

QUANTITY: 2

SIGN WIDTH: 1′-9″
HEIGHT: 1′-9″
TOTAL AREA: 3.1 Sq.Ft.

BORDER TYPE: RECESSED
RECESS: 0.38″
WIDTH: 0.63″
RADII: 1.5″

NO. Z BARS:
LENGTH:

SYMBOL	X	Y	WID	HT
U TURN	3.7	3.5	12.7	13.9

MAT'L: 0.063″ (1.6 mm) ALUMINUM

NOTES:

1. Legend and border shall be direct applied non-reflective sheeting.
2. Background shall be Type C reflective sheeting.

DESIGN BY: | CHECKED BY: | Aug 10, 2017

PROJECT ID: W-5601GA | LOCATION: VARIES | DIV: 3

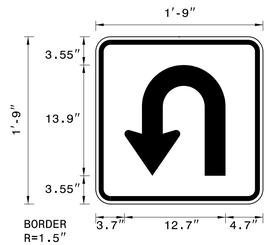

Spacing Factor is 1 unless specified otherwise

ARROW DETAIL

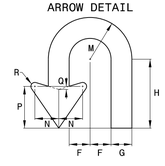

ARROW DIMENSIONS (INCHES)	F	G	H	M	N	P	Q	R
	2.625	2.625	8.659	5.25	3	5.25	0.375	0.5

FILENAME: W-5601GA_SGN_DESIGNS

NORTH CAROLINA D.O.T. SIGN DETAIL

RK&K
P: (919) 878-9560
8601 Six Forks Road, Forum 1,Suite 700
Raleigh, North Carolina 27615-3960
NC License No. F-0112
Engineers | Construction Managers | Planners | Scientists
www.rkk.com
Responsive People | Creative Solutions

11/16/2021 W-5601GA_SGN_PSH04A.dgn dsears

SIGN DESIGNS

TIP NO.	SHEET NO.
W-5601GA	SIGN-5

APPROVED: DocuSigned by: David T Sears 0901B3F28E5741E...

DATE: 11/16/2021

SEAL

NORTH CAROLINA PROFESSIONAL SEAL 044558 ENGINEER DAVID T. SEARS

DOCUMENT NOT CONSIDERED FINAL UNLESS ALL SIGNATURES COMPLETED

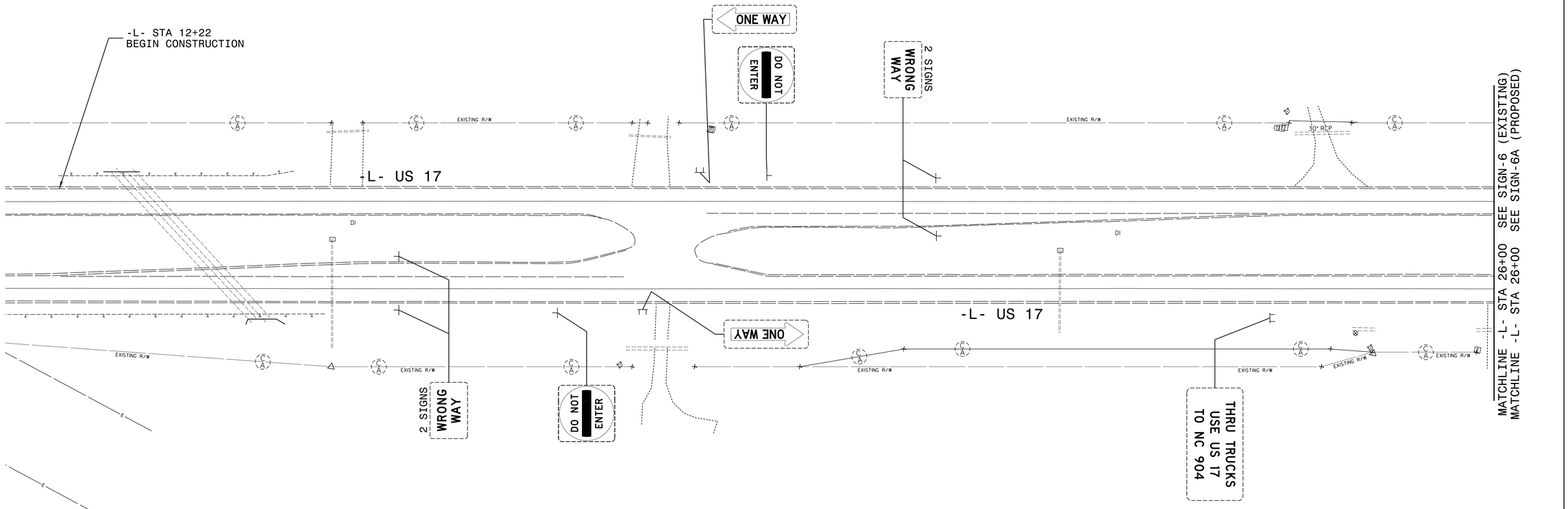

PROJECT NOTES

1. SIGN ERECTION, TYPE D, E, AND F
2. SIGN ERECTION, MILEMARKERS

EXISTING SIGNS

-L- STA 12+22 TO STA 26+00

RK&K
P: (919) 878-9560
8601 Six Forks Road. Forum 1,Suite 700
Raleigh, North Carolina 27615-3960
NC License No. F-0112
Engineers | Construction Managers | Planners | Scientists
www.rkk.com
Responsive People | Creative Solutions

11/16/21
W-5601GA_SGN_PSH05.dgn
dsears

TIP NO.	SHEET NO.
W-5601GA	SIGN-5A

APPROVED: DocuSigned by: David T Sears 0901B3F28E5741E...

DATE: 11/16/2021

SEAL

NORTH CAROLINA PROFESSIONAL SEAL 044558 ENGINEER DAVID T. SEARS

DOCUMENT NOT CONSIDERED FINAL UNLESS ALL SIGNATURES COMPLETED

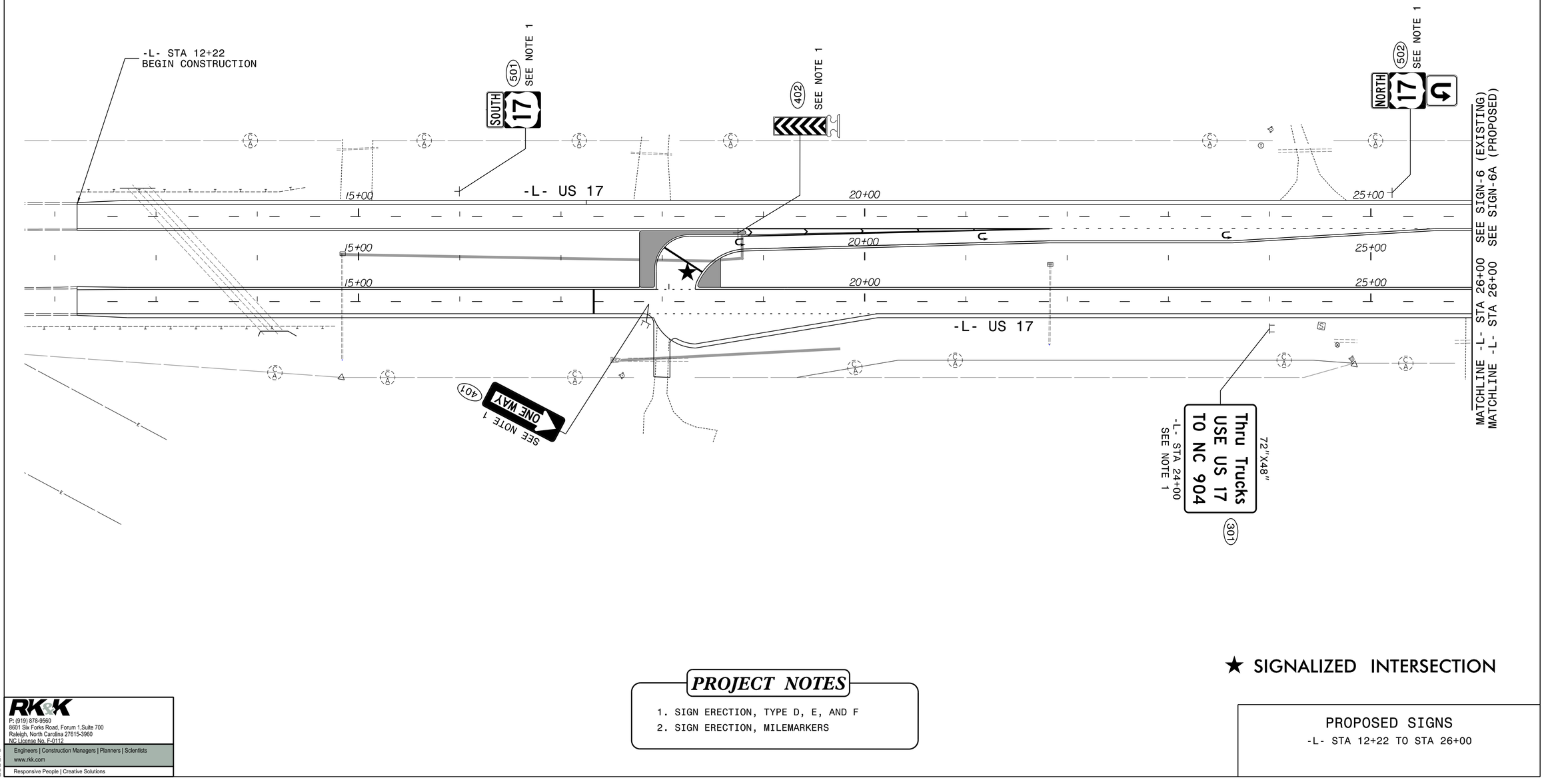

★ SIGNALIZED INTERSECTION

PROJECT NOTES

1. SIGN ERECTION, TYPE D, E, AND F
2. SIGN ERECTION, MILEMARKERS

PROPOSED SIGNS

-L- STA 12+22 TO STA 26+00

RK&K
P: (919) 878-9560
8601 Six Forks Road. Forum 1,Suite 700
Raleigh, North Carolina 27615-3960
NC License No. F-0112
Engineers | Construction Managers | Planners | Scientists
www.rkk.com
Responsive People | Creative Solutions

11/16/2021
W-5601GA_SGN_PSH05A.dgn
dsears

TIP NO.	SHEET NO.
W-5601GA	SIGN-6

APPROVED: DocuSigned by: David T Sears 2601B3F28E5741E...

DATE: 11/16/2021

SEAL

NORTH CAROLINA PROFESSIONAL SEAL 044558 ENGINEER DAVID T. SEARS

DOCUMENT NOT CONSIDERED FINAL UNLESS ALL SIGNATURES COMPLETED

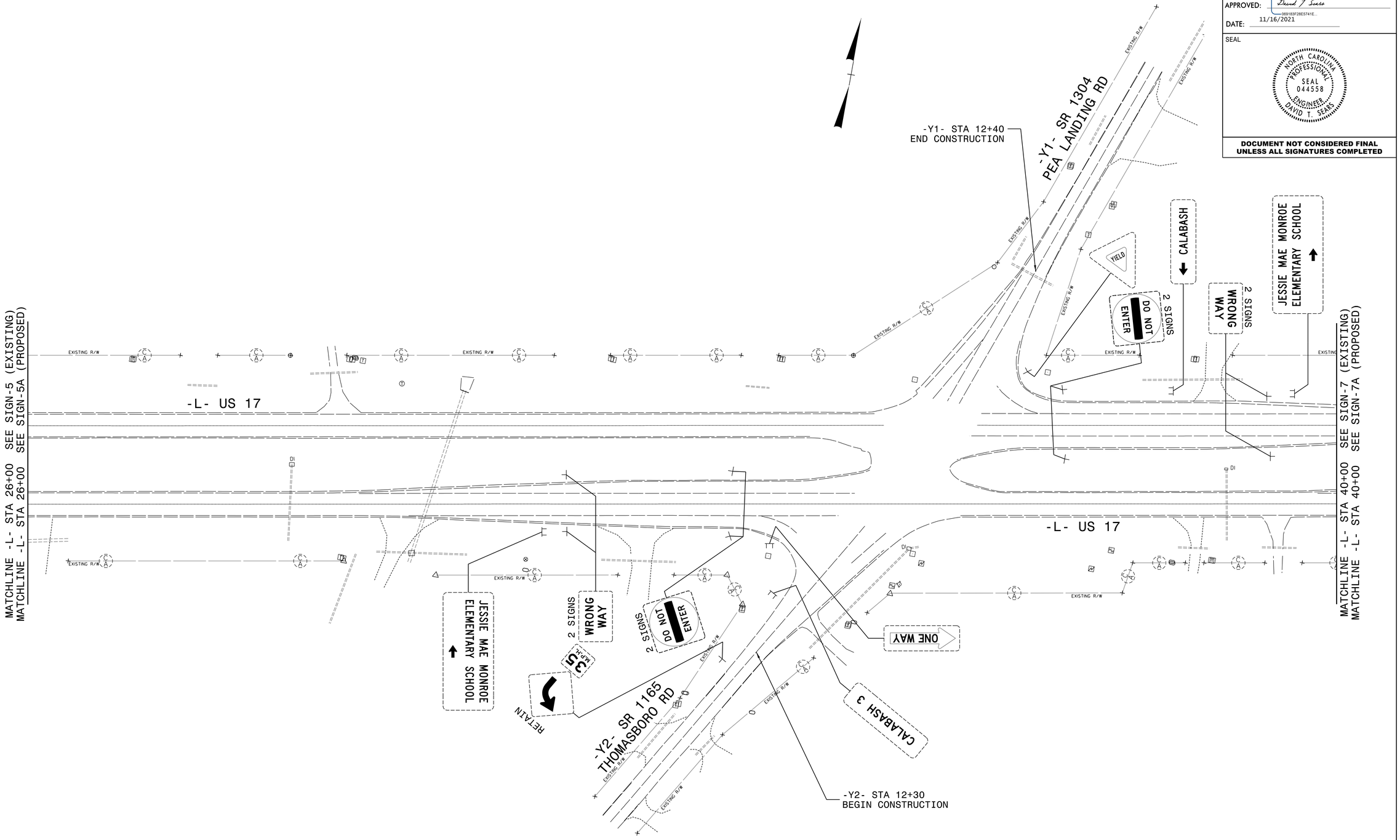

PROJECT NOTES

1. SIGN ERECTION, TYPE D, E, AND F
2. SIGN ERECTION, MILEMARKERS

EXISTING SIGNS

-L- STA 26+00 TO STA 40+00
-Y1- STA 10+00 TO STA 12+40
-Y2- STA 12+30 TO STA 14+85

RK&K
P: (919) 878-9560
8601 Six Forks Road, Forum 1,Suite 700
Raleigh, North Carolina 27615-3960
NC License No. F-0112
Engineers | Construction Managers | Planners | Scientists
www.rkk.com
Responsive People | Creative Solutions

11/16/21
W-5601GA_SGN_PSH06.dgn
tsears

TIP NO.	SHEET NO.
W-5601GA	SIGN-6A

APPROVED: DocuSigned by: David T Sears 2601B3F28E5741E...

DATE: 11/16/2021

SEAL

NORTH CAROLINA PROFESSIONAL SEAL 044558 ENGINEER DAVID T. SEARS

DOCUMENT NOT CONSIDERED FINAL UNLESS ALL SIGNATURES COMPLETED

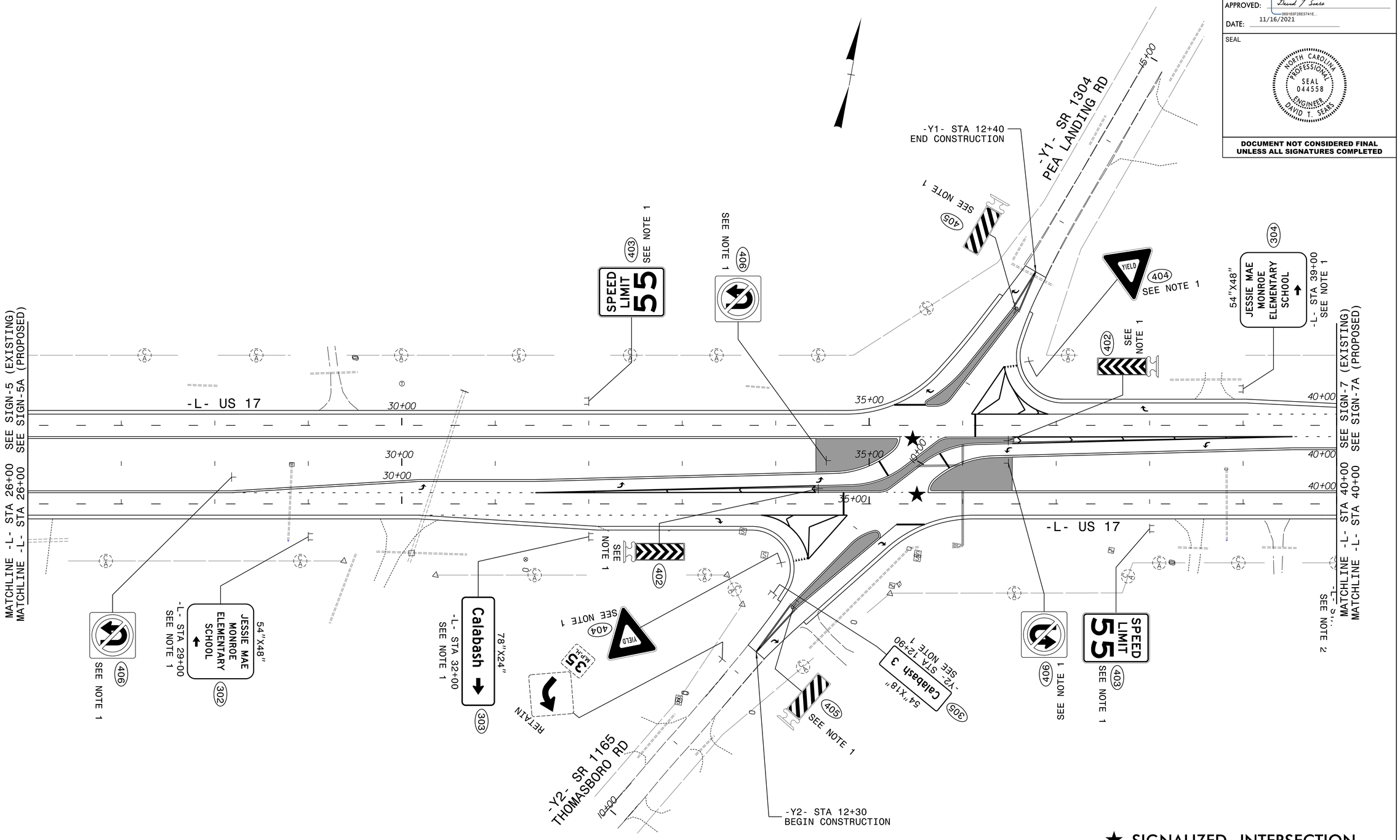

★ SIGNALIZED INTERSECTION

PROJECT NOTES

1. SIGN ERECTION, TYPE D, E, AND F
2. SIGN ERECTION, MILEMARKERS

EXISTING and PROPOSED SIGNS

-L- STA 26+00 TO STA 40+00
-Y1- STA 10+00 TO STA 12+40
-Y2- STA 12+30 TO STA 14+85

RK&K
P: (919) 878-9560
8601 Six Forks Road, Forum 1,Suite 700
Raleigh, North Carolina 27615-3960
NC License No. F-0112
Engineers | Construction Managers | Planners | Scientists
www.rkk.com
Responsive People | Creative Solutions

11/16/2021
W-5601GA_SGN_PSH06A.dgn
dsears

TIP NO.	SHEET NO.
W-5601GA	SIGN-7

APPROVED: DocuSigned by: David T Sears 0901B3F28E5741E...

DATE: 11/16/2021

SEAL

NORTH CAROLINA PROFESSIONAL SEAL 044558 ENGINEER DAVID T. SEARS

DOCUMENT NOT CONSIDERED FINAL UNLESS ALL SIGNATURES COMPLETED

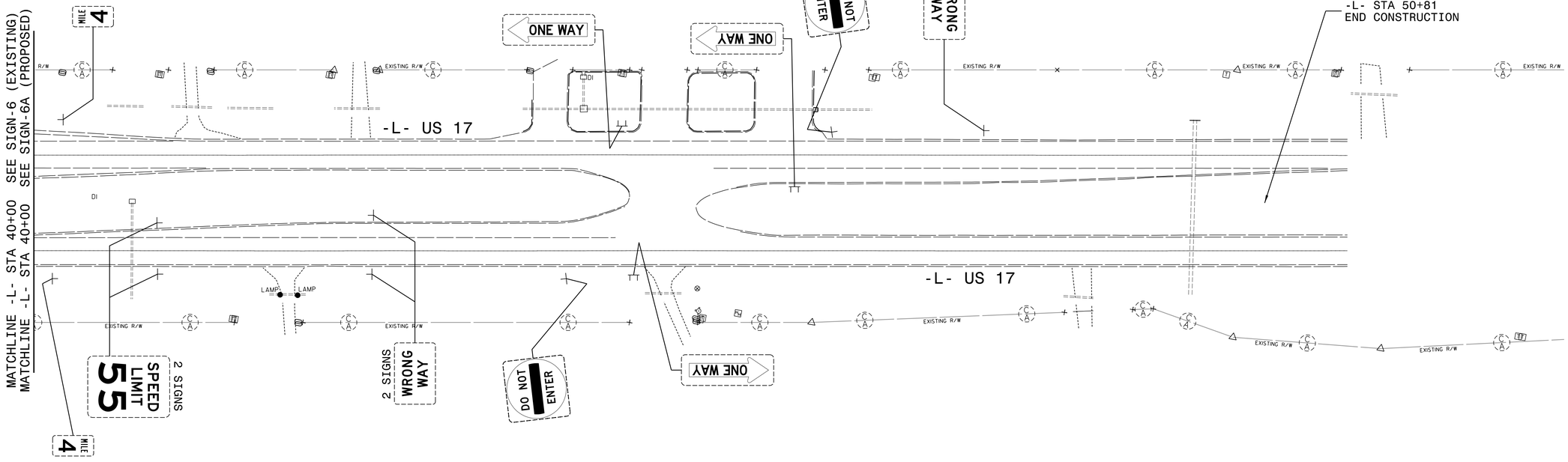

PROJECT NOTES

1. SIGN ERECTION, TYPE D, E, AND F
2. SIGN ERECTION, MILEMARKERS

EXISTING SIGNS

-L- STA 40+00 TO STA 50+81

RK&K
P: (919) 878-9560
8601 Six Forks Road, Forum 1,Suite 700
Raleigh, North Carolina 27615-3960
NC License No. F-0112
Engineers | Construction Managers | Planners | Scientists
www.rkk.com
Responsive People | Creative Solutions

11/16/21
W-5601GA_SGN_PSH07.dgn
dsears

TIP NO.	SHEET NO.
W-5601GA	SIGN-7A

APPROVED: DocuSigned by: David T Sears 0901B3F28E5741E...

DATE: 11/16/2021

SEAL

NORTH CAROLINA PROFESSIONAL SEAL 044558 ENGINEER DAVID T. SEARS

DOCUMENT NOT CONSIDERED FINAL UNLESS ALL SIGNATURES COMPLETED

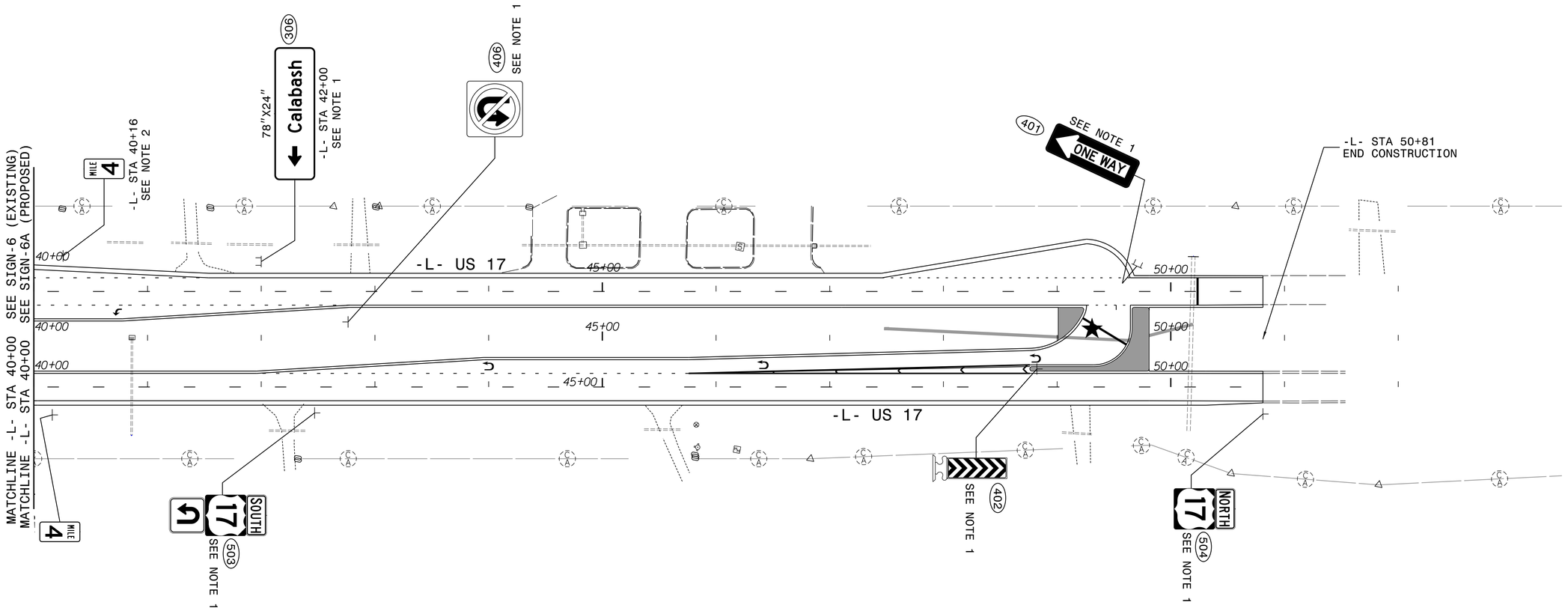

★ SIGNALIZED INTERSECTION

PROJECT NOTES

1. SIGN ERECTION, TYPE D, E, AND F
2. SIGN ERECTION, MILEMARKERS

PROPOSED SIGNS

-L- STA 40+00 TO STA 50+81

RK&K

P: (919) 878-9560
8601 Six Forks Road, Forum 1,Suite 700
Raleigh, North Carolina 27615-3960
NC License No. F-0112

Engineers | Construction Managers | Planners | Scientists

www.rkk.com

Responsive People | Creative Solutions

11/16/21
W-5601GA_SGN_PSH07A.dgn
dsears

09/08/99

TIP PROJECT: W-5601GA

CONTRACT: DC00326

Project No.	Sheet No.
W-5601GA	Sig. 1.0

STATE OF NORTH CAROLINA
DIVISION OF HIGHWAYS

BRUNSWICK COUNTY

LOCATION: US-17 AT SR 1165 (THOMASBORO ROAD)/SR1304 (PEA LANDING ROAD)

TYPE OF WORK: TRAFFIC SIGNALS AND SIGNAL COMMUNICATIONS

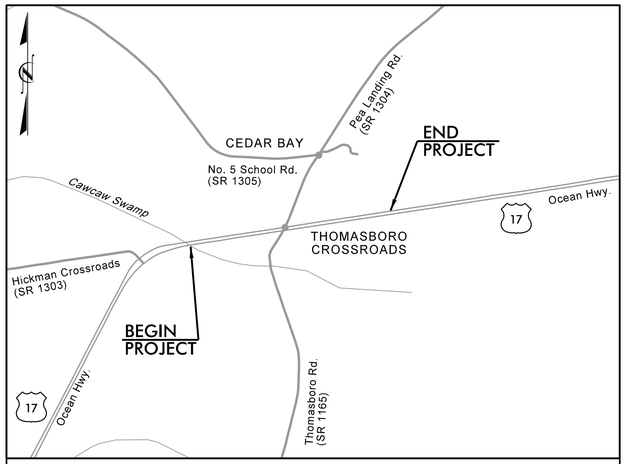

VICINITY MAP (NTS)



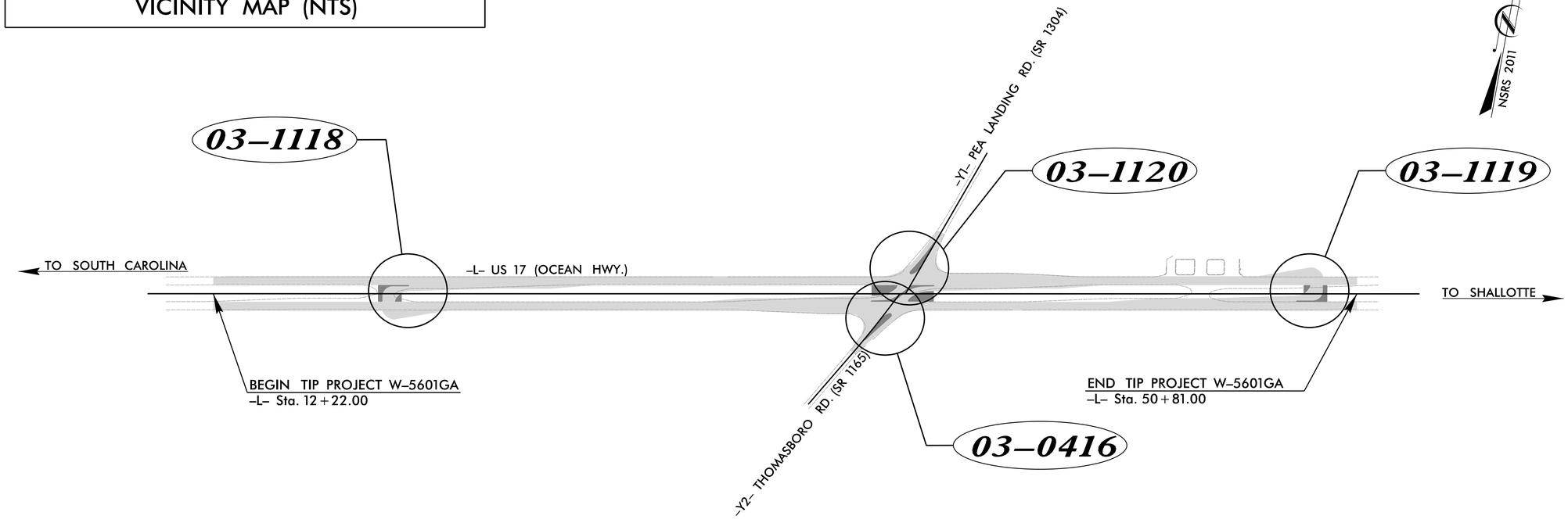

Refer to "Roadway Standard Drawings NCDOT" dated January 2018 and "Standard Specifications for Roads and Structures" dated January 2018.

Index of Plans

Sheet #	Reference #	Location/Description
SIG. 1	--------	TITLE SHEET
SIG. 1.1-1.2	--------	STANDARD PLATE SHEETS
SIG. 2.0-2.9	03-1118	US 17 (OCEAN HIGHWAY) AT THOMASBORO ROAD SB U-TURN
SIG. 3.0-3.5	03-0416	US 17 (OCEAN HIGHWAY) AT THOMASBORO ROAD
SIG. 4.0-4.5	03-1120	US 17 (OCEAN HIGHWAY) AT PEA LANDING ROAD
SIG. 5.0-5.9	03-1119	US 17 (OCEAN HIGHWAY) AT THOMASBORO ROAD NB U-TURN
SIG. M1-M8	--------	METAL POLE DETAILS
SCP. 1-7	--------	SIGNAL COMMUNICATION PLANS

RK&K
RUMMEL, KLEPPER & KAHL, LLP
8601 SIX FORKS ROAD, FORUM 1, SUITE 700
RALEIGH, NORTH CAROLINA 27615-3960
NC LICENSE NO. F-0112
1-888-521-4455 OR 919-878-9560

FOR
DIVISION OF HIGHWAYS

2018 STANDARD SPECIFICATIONS

LETTING DATE:

DECEMBER 16, 2021

D.T. Sears, PE, PTOE
PROJECT ENGINEER

W. P. Erickson-Jones, EI
PROJECT DESIGN ENGINEER

NCDOT SIGNAL & ITS CONTACT INFORMATION:

Phone Number (919) 814-5000 , Fax Number (919) 771-2745
Zachary Little, PE - Eastern Region Signal Engineer
D. Todd Joyce, PE - Signal Equipment Design Review Engineer
Gregg A. Green - Signal Communications Project Engineer

DIVISION OF HIGHWAYS
TRANSPORTATION MOBILITY AND SAFETY DIVISION

750 N. Greenfield Parkway, Garner, NC 27529

11/19/2021
R:\Traffic\Signals\Design\Titlesheet\W-5601GA_Sig_tsh.dgn
dsears

PROJECT NO.	SHEET NO.
W-5601GA	Sig. 1.1

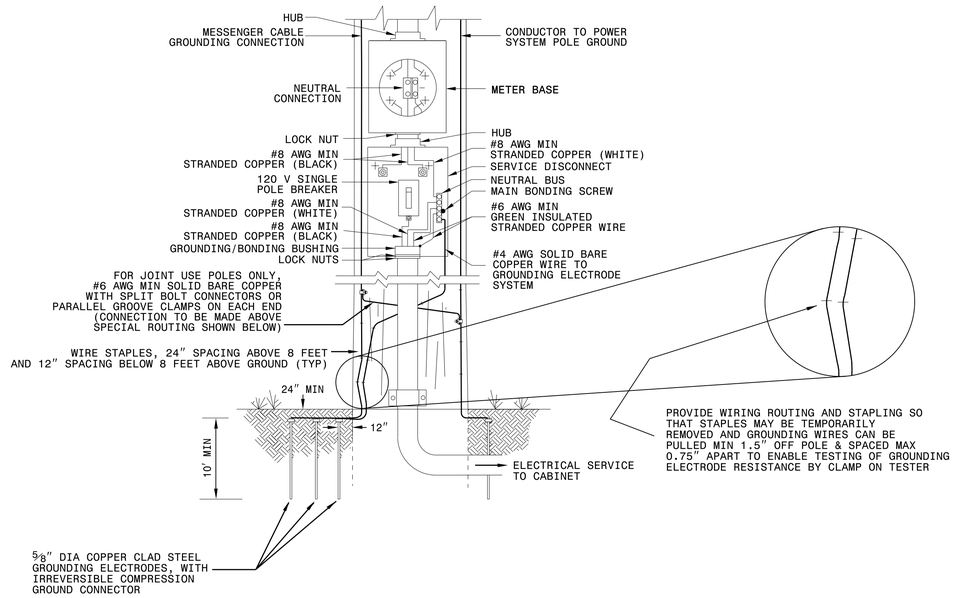

1-18

STATE OF
NORTH CAROLINA
DEPT. OF TRANSPORTATION
DIVISION OF HIGHWAYS
RALEIGH, N.C.

ENGLISH STANDARD DRAWING FOR

ELECTRICAL SERVICE GROUNDING

GROUNDING AND BONDING

SHEET 1 OF 1

1700D01

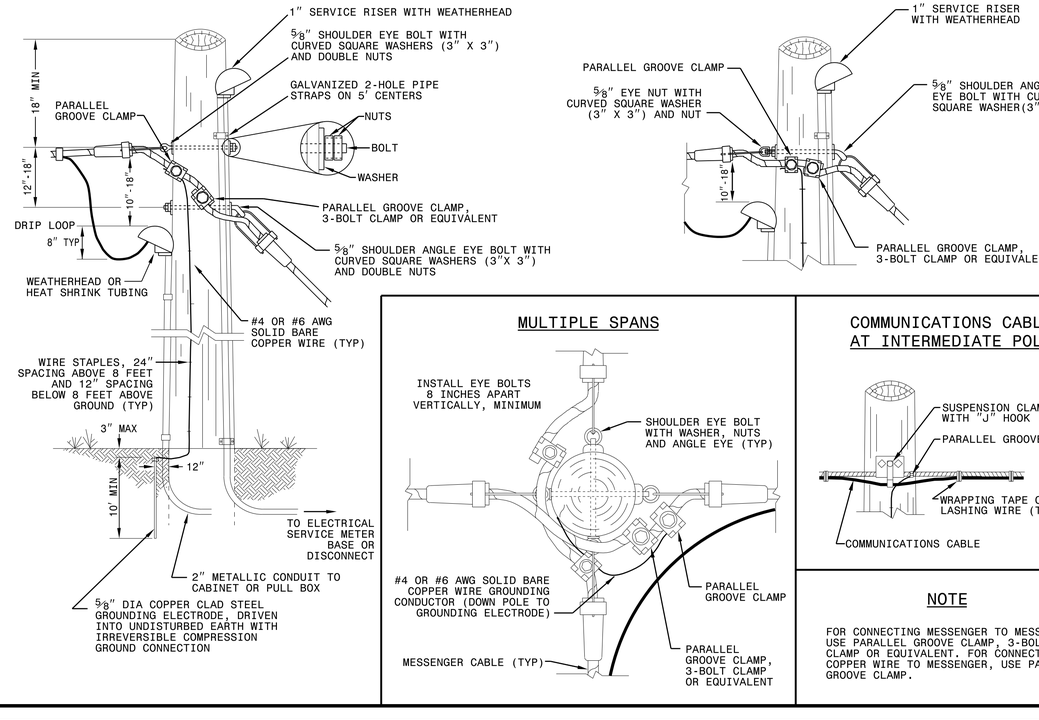

1-18

STATE OF
NORTH CAROLINA
DEPT. OF TRANSPORTATION
DIVISION OF HIGHWAYS
RALEIGH, N.C.

ENGLISH STANDARD DRAWING FOR

WOOD POLES

METHODS OF ATTACHMENT AND GROUNDING

SHEET 1 OF 1

1720D01

DOCUMENT NOT CONSIDERED FINAL UNLESS ALL SIGNATURES COMPLETED

See Plate for Title

Prepared in the Offices of:

Transportation Mobility and Safety Division
STATE OF NORTH CAROLINA DEPARTMENT OF TRANSPORTATION
ITS & Signals Unit

750 N. Greenfield Parkway
Garner, NC 27529

SEAL

NORTH CAROLINA PROFESSIONAL SEAL 032108 ENGINEER MOHD A. ASLAMI

DocuSigned by: Mohd Aslami
5D90B0BA6DBB6495...

10/11/2017
DATE

11-OCT-2017 08:56
U:\NCDOT\Std Drawings\Plate Sheets\2018_Plate Sheet .dgn
rwhough

PROJECT NO.	SHEET NO.
W-5601GA	Sig. 1.2

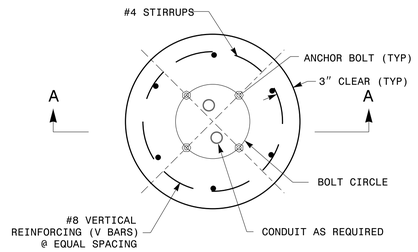

PEDESTAL FOUNDATION - PLAN VIEW

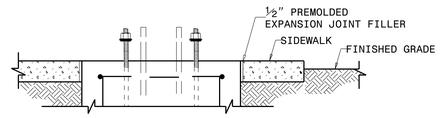

PEDESTAL FOUNDATION DETAILS FOR SIDEWALK

NOTES:

1. CAST FOUNDATION AGAINST UNDISTURBED SOIL WHEREVER CONDITIONS PERMIT. IN UNSTABLE SOIL, CAST-IN-PLACE TUBE FORMS ARE ALLOWED WITH APPROVAL.
2. COMPLY WITH APPLICABLE PROVISIONS OF SECTION 825 FOR CONCRETE CONSTRUCTION.
3. USE CLASS "A" CONCRETE THAT MEETS THE REQUIREMENTS OF SECTION 1000 WITH A COMPRESSION STRENGTH AT 28 DAYS OF F'c= 3000 PSI (MIN.).
4. USE ASTM GRADE 60 DEFORMED BARS FOR ALL REINFORCING STEEL.
5. GRADE IS ASSUMED TO BE (8H:1V) OR FLATTER. FOUNDATION SIZE AND DEPTHS ARE BASED ON THE FOLLOWING SOIL DESIGN PARAMETERS:
   A. SANDY TYPE SOIL
   B. NO GROUND WATER WITHIN 5'-0" OF SURFACE ELEVATION
   C. WIND SPEED NOT TO EXCEED 140 MPH

   IF ACTUAL CONDITIONS VARY SUBSTANTIALLY FROM THOSE ASSUMED, THE FOUNDATION DEPTH MAY BE ADJUSTED. IN THIS CASE, CONTACT THE ENGINEER.
6. MAINTAIN AT LEAST 3" COVER ON ALL REINFORCEMENT.
7. ORIENT CONDUIT AS REQUIRED BY THE DESIGN OR AS DICTATED BY FIELD CONDITIONS.
8. USE ADHESIVE ANCHOR FOR THREADED COUPLING INSERT. FOR TYPE I MINIMUM DEPTH NECESSARY IS 0'-4½" AND FOR TYPE II MINIMUM DEPTH NECESSARY IS 0'-6⅝". FOLLOW MANUFACTURER'S INSTALLATION INSTRUCTIONS.

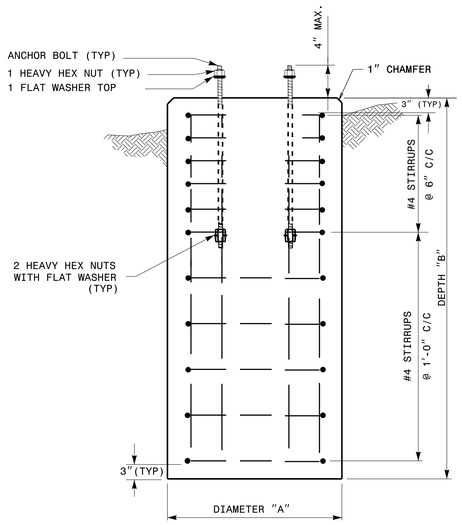

TYPES I, II & III

SECTION A-A

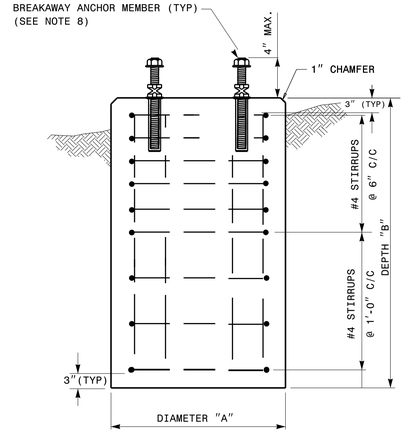

TYPES I & II ONLY

SECTION A-A

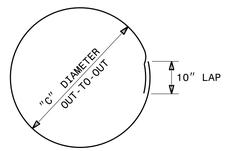

CLOSED HOOPS

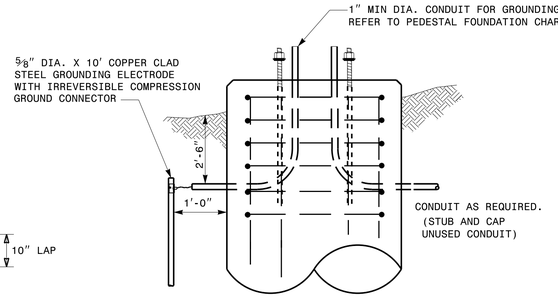

GROUNDING & CONDUIT DETAIL

PEDESTAL FOUNDATION TYPE AND SIZE

TYPE	PEDESTAL DESCRIPTION	SIZE			ANCHOR BOLT		INSTALL GROUNDING SYSTEM (YES/NO)
		DIAMETER "A" FT	DEPTH "B" FT	CONCRETE VOLUME CY	DIAMETER (MIN.) IN	LENGTH FT-IN	
I	PEDESTRIAN PUSHBUTTON	2'-0"	3'-6"	.41	½	1'-6"	NO
II	NORMAL-DUTY	2'-0"	5'-0"	.58	¾	2'-0"	YES
III	HEAVY-DUTY	2'-6"	7'-0"	1.27	1	4'-0"	YES

REINFORCING STEEL SCHEDULE

TYPE	V-BAR				STIRRUP								TOTAL STEEL WEIGHT LBS
	SIZE #	QTY	LENGTH	WEIGHT LBS	SIZE #	QUANTITY VERTICAL SPACING ON 6" CENTERS	QUANTITY VERTICAL SPACING ON 12" CENTERS	QUANTITY TOTAL	LENGTH	DIAMETER "C" FT	OVERLAP MIN.	WEIGHT LBS	
I	8	6	3'-0"	56	4	0	4	4	5'-7"	1'-6"	0'-10"	15	71
II	8	6	4'-6"	86	4	5	3	8	5'-7"	1'-6"	0'-10"	30	116
III	8	6	6'-6"	122	4	7	4	11	7'-2"	2'-0"	0'-10"	53	175

STATE OF NORTH CAROLINA
DEPT. OF TRANSPORTATION
DIVISION OF HIGHWAYS
RALEIGH, N.C.

1-18

ENGLISH STANDARD DRAWING FOR

PEDESTALS

FOUNDATIONS

SHEET 1 OF 1

1743D01

11-OCT-2017 03:03
U:\NCDOT Std Drawings\Plate Sheets\2018_Plate Sheet .dgn
rwhough

See Plate for Title

Prepared in the Offices of:

Transportation Mobility and Safety Division
ITS & Signals Unit
NORTH CAROLINA DEPARTMENT OF TRANSPORTATION

750 N. Greenfield Parkway
Garner, NC 27529

SEAL
NORTH CAROLINA
PROFESSIONAL
SEAL
028094
ENGINEER
DEBESH C. SARKAR

DocuSigned by:
Debesh C. Sarkar
44E8E32E147E4C4...
10/11/2017
DATE

DOCUMENT NOT CONSIDERED
FINAL UNLESS ALL
SIGNATURES COMPLETED

PROJECT REFERENCE NO.	SHEET NO.
W-5601GA	SIG. 2.0

2 PHASE FULLY ACTUATED D03-06_CALABASH SIGNAL SYSTEM

NOTES

1. REFER TO "ROADWAY STANDARD DRAWINGS NCDOT" DATED JANUARY 2018 AND "STANDARD SPECIFICATIONS FOR ROADS AND STRUCTURES" DATED JANUARY 2018.
2. DO NOT PROGRAM SIGNAL FOR LATE NIGHT FLASHING OPERATION UNLESS OTHERWISE DIRECTED BY THE ENGINEER.
3. SET ALL DETECTOR UNITS TO PRESENCE MODE.
4. ACTIVATE FLASHERS 3 SECONDS PRIOR TO THE END OF PHASE 2 GREEN.
5. REFER TO PAVEMENT MARKING PLANS FOR STOP BAR LOCATIONS.
6. INSTALL PULL BOXES AT INTERVALS OF NO GREATER THAN 150 FT ALONG ALL RUNS OF LEAD-IN WIRE.
7. MAXIMUM TIMES SHOWN IN TIMING CHART ARE FOR FREE-RUN OPERATION ONLY. COORDINATED SIGNAL SYSTEM TIMING VALUES SUPERSEDE THESE VALUES.
8. CLOSED LOOP SYSTEM DATA: CONTROLLER ASSET #1118.

DEFAULT PHASING DIAGRAM

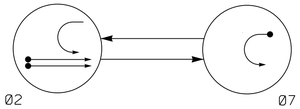

ALTERNATE PHASING DIAGRAM

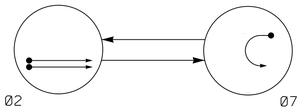

PHASING DIAGRAM DETECTION LEGEND

- DETECTED MOVEMENT
- UNDETECTED MOVEMENT (OVERLAP)
- UNSIGNALIZED MOVEMENT
- PEDESTRIAN MOVEMENT

DEFAULT PHASING TABLE OF OPERATION

SIGNAL FACE	Ø2	Ø7	CPREA7R1	DWELL	FLASH
21,22	G	R	R	Y	Y
23,24,25,26	OFF	ON	ON	OFF	OFF
71,72	(F)	↑	↑	(R)	(R)

ALTERNATE PHASING TABLE OF OPERATION

SIGNAL FACE	Ø2	Ø7	CPREA7R1	DWELL	FLASH
21,22	G	R	R	Y	Y
23,24,25,26	OFF	ON	ON	OFF	OFF
71,72	(R)	↑	↑	(R)	(R)

SIGNAL FACE I.D.

All Heads L.E.D.

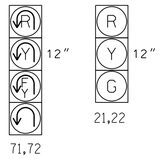

BEACON TABLE OF OPERATION

SIGNAL FACE	INTERVAL 1	INTERVAL 2
23,25	ON	OFF
24,26	OFF	ON

Figure 1

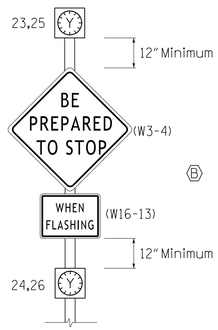

FAILURE PREEMPT

(High Priority)

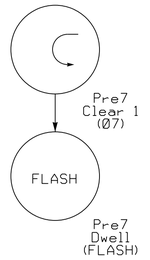

FAILURE PREEMPT

FUNCTION	PRE 7
Interval 1 – Green Clear	15
Interval 1 – Yellow Clear	0.0*
Interval 1 – Red Clear	0.0*
Interval 2 – Dwell Green	255
Interval 2 – Dwell Yellow	0.0*
Interval 2 – Dwell Red	0.0*
Interval 5 – Exit Green	1
Interval 5 – Yellow	0.0
Interval 5 – Red	0.0
Exit Phase(s)	2
Priority	High
Delay Time	0.0
Min Green Before Pre	1
Ped Clear Before Pre	0
Yellow Clear Before Pre	0.0*
Red Clear Before Pre	0.0*
Dwell Min Time	14
Flash Dwell Interval?	Y
Enable Backup Protection	N
Ped Clear Through Yellow	N
Omit Overlaps	-

* Time defaults to time used for phase during normal operation

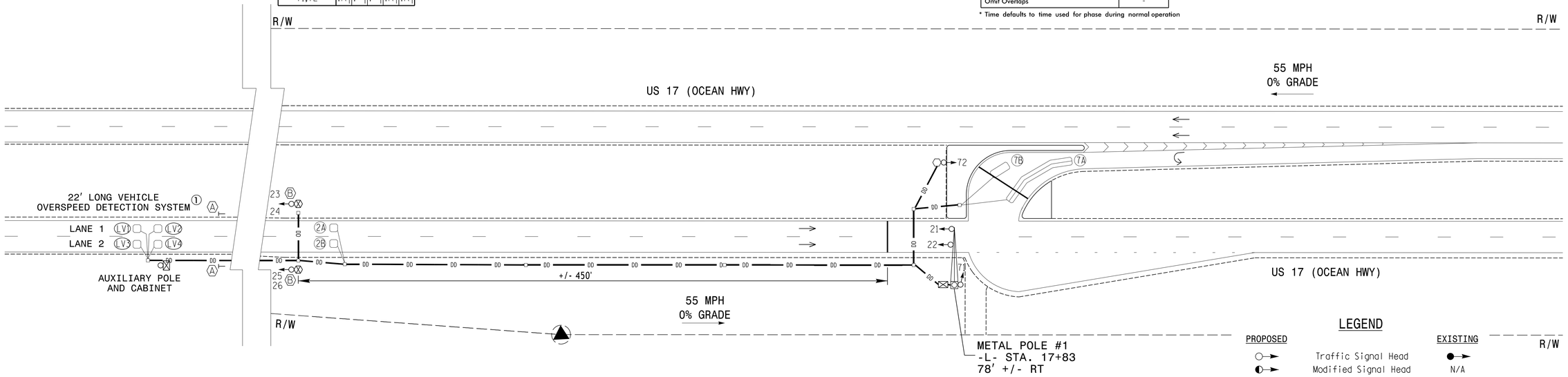

LEGEND

PROPOSED		EXISTING
○→	Traffic Signal Head	●→
◐→	Modified Signal Head	N/A
⊣	Sign	⊣
□	Pedestrian Signal Head With Push Button & Sign	■
○	Signal Pole with Guy	●
○ ⤵	Signal Pole with Sidewalk Guy	●
▭	Inductive Loop Detector	▭
⊠	Controller & Cabinet	⊠
□	Junction Box	■
	2-in Underground Conduit	
N/A	Right of Way	
→	Directional Arrow	→
▱	Metal Pole with Mastarm	▱
⬡	Type II Signal Pedestal	⬢
⊗	Type III Signal Pedestal	⊗
(A)	Signal Ahead Sign (W3-3)	(A)
(B)	"BE PREPARED TO STOP" Sign (W3-4) w/ "WHEN FLASHING" (W16-13p) Plaque (See Figure 1)	(B)

OASIS 2070 TIMING CHART

FEATURE	PHASE 2	PHASE 7
Min Green 1 *	14	7
Extension 1 *	6.0	2.0
Max Green 1 *	90	30
Yellow Clearance	5.2	3.0
Red Clearance	1.4	4.7
Walk 1 *	-	-
Don't Walk 1	-	-
Seconds Per Actuation *	1.5	-
Max Variable Initial *	46	-
Time Before Reduction *	15	-
Time To Reduce *	30	-
Minimum Gap	3.4	-
Recall Mode	MIN RECALL	-
Vehicle Call Memory	YELLOW	-
Dual Entry	-	-
Simultaneous Gap	ON	ON

* These values may be field adjusted. Do not adjust Min Green and Extension times for phase 2 lower than what is shown. Min Green for all other phases should not be lower than 4 seconds.

OASIS 2070 LOOP & DETECTOR INSTALLATION CHART

INDUCTIVE LOOPS					DETECTOR PROGRAMMING							
LOOP	SIZE (FT)	DISTANCE FROM STOPBAR (FT)	TURNS	NEW LOOP	PHASE	CALLING	EXTENSION	FULL TIME DELAY	STRETCH TIME	DELAY TIME	SYSTEM LOOP	NEW CARD
2A	6x6	420	5	Y	2	Y	Y	-	-	-	-	Y
2B	6x6	420	5	Y	2	Y	Y	-	-	-	-	Y
7A	6x60	+10	2-4-2	Y	7	Y	Y	-	-	✳15	-	Y
7B	6x15	0	3	Y	7	Y	Y	-	-	✳15	-	Y

✳Disable Delay During Alternate Phasing Operation.

LONG VEHICLE OVERSPEED DETECTION SYSTEM

LOOP & DETECTION INSTALLATION CHART

INDUCTIVE LOOPS					DETECTOR UNITS						
LOOP NO.	SIZE (ft)	TURNS	DIST. FROM STOPBAR (ft)	NEW	EXISTING	LANE NO	DETECTOR CHANNEL	NEMA PHASE	TIMING FEATURE	TIMING TIME	PLACE CALL DURING PHASE	INHIBIT DELAY DURING GREENY
LV1	6'X6'	4	1015'	X	LVODS 2 CHANNEL 4 VOLT ZONE	1	1	2*	NONE	- SEC.	ALL	NO
LV2	6'X6'	4	999'	X		1	2		NONE	- SEC.	ALL	NO
LV3	6'X6'	4	1015'	X		2	1	2*	NONE	- SEC.	ALL	NO
LV4	6'X6'	4	999'	X		2	2		NONE	- SEC.	ALL	NO
LVODS THRESHOLD SPEED (MPH)	55							2				
LVODS EXTEND TIME	12 SEC.							2				

*Phase hold output to controller

NEW INSTALLATION

DOCUMENT NOT CONSIDERED FINAL UNLESS ALL SIGNATURES COMPLETED

RK&K
P: (919) 878-9560
8601 Six Forks Road Suite 700 | Raleigh, North Carolina 27615-2965
NC License No. F-0112
Engineers | Construction Managers | Planners | Scientists
www.rkk.com
Responsive People | Creative Solutions

Prepared for the Offices of:
Transportation Mobility and Safety Division
NORTH CAROLINA DEPARTMENT OF TRANSPORTATION
Signal Design Section
750 N.Greenfield Pkwy,Garner,NC 27529

SCALE 0 40 1"=40'

US 17 (OCEAN HIGHWAY) AT THOMASBORO ROAD SB U-TURN

DIVISION 3 BRUNSWICK COUNTY CALABASH

PLAN DATE: NOVEMBER 2021 REVIEWED BY: C.B. HOLDEN

PREPARED BY: D.T. SEARS REVIEWED BY:

REVISIONS	INIT.	DATE

SEAL
NORTH CAROLINA PROFESSIONAL SEAL 044558 ENGINEER DAVID T. SEARS

DocuSigned by: David T Sears 11/19/2021
SIGNATURE DATE

SIG. INVENTORY NO. 03-1118

11/19/2021
R:\rkk\Signals\Design\Signals\W-5601GA_SIG_03-1118.dgn
dsears

PROJECT REFERENCE NO.	SHEET NO.
W-5601GA	Sig. 2.1

EDI MODEL 2018ECL-NC CONFLICT MONITOR PROGRAMMING DETAIL

(remove jumpers and set switches as shown)

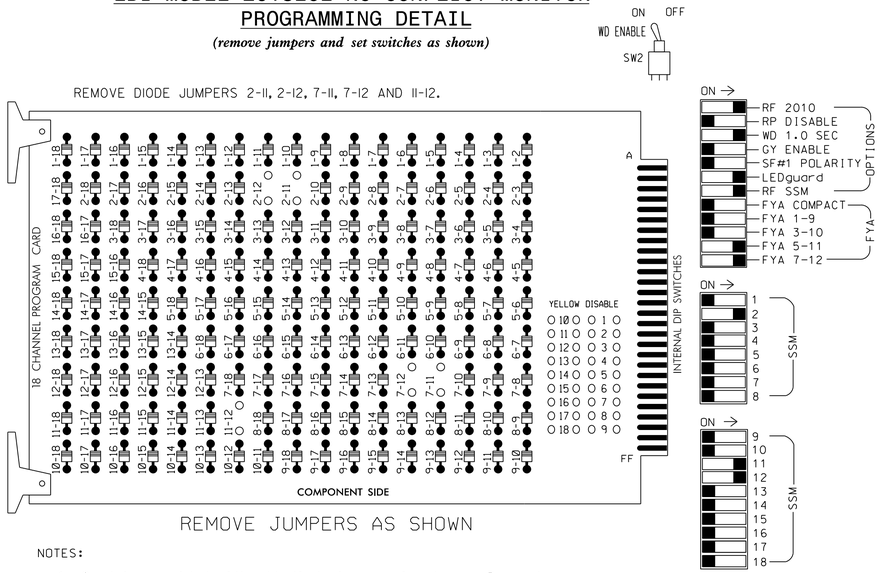

REMOVE JUMPERS AS SHOWN

■ = DENOTES POSITION OF SWITCH

NOTES:

1. Card is provided with all diode jumpers in place. Removal of any jumper allows its channels to run concurrently.
2. Ensure jumpers SEL2-SEL5 and SEL9 are present on the monitor board.
3. Ensure that Red Enable is active at all times during normal operation.
4. Connect serial cable from conflict monitor to comm. port 1 of 2070 controller. Ensure conflict monitor communicates with 2070.

NOTES

1. To prevent "flash-conflict" problems, insert red flash program blocks for all unused vehicle load switches in the output file. The installer shall verify that signal heads flash in accordance with the Signal Plans.
2. Enable Simultaneous Gap-Out for all Phases.
3. Program phase 2 for Variable Initial and Gap Reduction.
4. Program phase 2 for Startup In Green.
5. Program phase 2 for Yellow Flash.
6. If this signal will be managed by an ATMS software, enable controller and detector logging for all detectors used at this location.
7. The cabinet and controller are part of the D03-06 Calabash Signal System.

EQUIPMENT INFORMATION

CONTROLLER.....2070
CABINET.....332 w/ AUX
SOFTWARE.....ECONOLITE OASIS
CABINET MOUNT.....BASE
OUTPUT FILE POSITIONS...18 WITH AUX. OUTPUT FILE
LOAD SWITCHES USED.....S2,S3*,S7,S9*,S10,AUX S4,AUX S5
PHASES USED.....2,7
OVERLAP "A".....NOT USED
OVERLAP "B".....NOT USED
OVERLAP "C".....2+7
OVERLAP "D".....2+7

*USED FOR ADVANCE BEACON CONTROL ONLY

SIGNAL HEAD HOOK-UP CHART

LOAD SWITCH NO.	S1	S2	S3	S4	S5	S6	S7	S8	S9	S10	S11	S12	AUX S1	AUX S2	AUX S3	AUX S4	AUX S5	AUX S6
CMU CHANNEL NO.	1	2	13	3	4	14	5	6	15	7	8	16	9	10	17	11	12	18
PHASE	1	2	2 PED	3	4	4 PED	7★	6	6 PED	7★	8	8 PED	OLA	OLB	SPARE	OLC★	OLD★	SPARE
SIGNAL HEAD NO.	NU	21,22	ADVANCE BEACON	NU	NU	NU	71	NU	ADVANCE BEACON	72	NU	NU	NU	NU	NU	71	72	NU
RED		128																
YELLOW		129					*			*								
GREEN		130																
RED ARROW																A114	A101	
YELLOW ARROW																A115	A102	
FLASHING YELLOW ARROW																A116	A103	
GREEN ARROW							133			124								
✋																		
PED YELLOW			**						**									
🚶			*						*									

NU = Not Used

* Denotes install load resistor. See load resistor installation detail this sheet.

** Special advance beacons will be wired to S3-Y (2 PED YELLOW) and S9-Y (6 PED YELLOW). See wiring and programming details on sheet 5 of this electrical detail.

★ See pictorial of head wiring in detail below.

See Output Reassignment Programming Detail of S7 on sheet 8.

INPUT FILE POSITION LAYOUT

(front view)

	1	2	3	4	5	6	7	8	9	10	11	12	13	14
FILE "I" U	SLOT EMPTY	Ø2 2A	SLOT EMPTY	SLOT EMPTY	SLOT EMPTY	SLOT EMPTY	SLOT EMPTY	SLOT EMPTY	SLOT EMPTY	SLOT EMPTY	SLOT EMPTY	SLOT EMPTY	SLOT EMPTY	FS DC ISOLATOR
FILE "I" L		Ø2 2B												ST DC ISOLATOR
FILE "J" U	SLOT EMPTY	SLOT EMPTY	SLOT EMPTY	SLOT EMPTY	SLOT EMPTY	Ø7 7A	SLOT EMPTY	SLOT EMPTY	SLOT EMPTY	SLOT EMPTY	SLOT EMPTY	SLOT EMPTY	SLOT EMPTY	Ø2 HOLD AC ISOLATOR
FILE "J" L						Ø7 7B								NOT USED

EX.: 1A, 2A, ETC. = LOOP NO.'S

FS = FLASH SENSE
ST = STOP TIME

INPUT FILE CONNECTION & PROGRAMMING CHART

LOOP NO.	LOOP TERMINAL	INPUT FILE POS.	PIN NO.	INPUT ASSIGNMENT NO.	DETECTOR NO.	NEMA PHASE	CALL	EXTEND	FULL TIME DELAY	STRETCH TIME	DELAY TIME
2A	TB2-5,6	I2U	39	1	2	2	Y	Y			
2B	TB2-7,8	I2L	43	5	12	2	Y	Y			
7A	TB5-9,10	J6U	42	4	8	7	Y	Y			15
	-	J6U	42	4 ★	57	7	Y	Y			
7B	TB5-11,12	J6L	46	8	18	7	Y	Y			15
	-	J6L	46	8 ★	58	7	Y	Y			

★ See Input Assignment Programming Details for Alternate Phasing on sheets 6 and 7.

INPUT FILE POSITION LEGEND: J2L
FILE J
SLOT 2
LOWER

FYA SIGNAL WIRING DETAIL

(wire signal heads as shown)

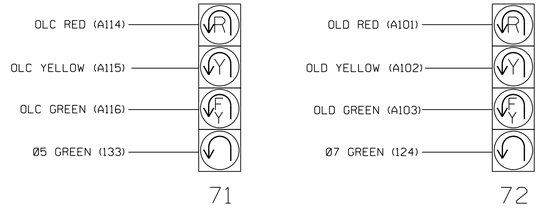

NOTE

The sequence display for these signals require special logic programming. See sheet 2 for programming instructions.

LOAD RESISTOR INSTALLATION DETAIL

ACCEPTABLE VALUES	
VALUE (ohms)	WATTAGE
1.5K - 1.9K	25W (min)
2.0K - 3.0K	10W (min)

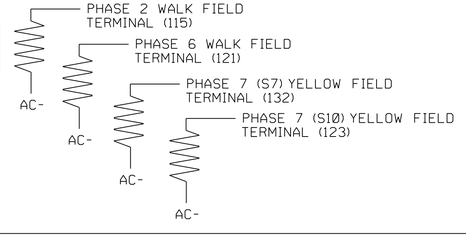

THIS ELECTRICAL DETAIL IS FOR THE SIGNAL DESIGN: 03-1118
DESIGNED: November 2021
SEALED: November 19, 2021
REVISED:

RK&K
P: (919) 878-9560
8601 Six Forks Road Suite 700 | Raleigh, North Carolina 27615-2965
NC License No. F-0112
Engineers | Construction Managers | Planners | Scientists
www.rkk.com
Responsive People | Creative Solutions

ELECTRICAL DETAIL SHEET 1 OF 8

DOCUMENT NOT CONSIDERED FINAL UNLESS ALL SIGNATURES COMPLETED

ELECTRICAL AND PROGRAMMING DETAILS FOR:

Prepared for the Offices of:
Traffic Engineering Branch, Mobility and Safety Division
NC Department of Transportation
Traffic Engineering & Signals Management Section
750 N.Greenfield Pkwy.Garner,NC 27529

US 17 (OCEAN HIGHWAY) AT THOMASBORO ROAD SB U-TURN

Division 3 | Brunswick County | Calabash

PLAN DATE: November 2021 | REVIEWED BY: J O Deaton
PREPARED BY: M W Yalch | REVIEWED BY:

REVISIONS	INIT.	DATE

SEAL
NORTH CAROLINA PROFESSIONAL SEAL 07438 ENGINEER JAMES O. DEATON

DocuSigned by: JAMES O. Deaton 11/19/2021
40FE8AC436B04DF... SIGNATURE DATE

SIG. INVENTORY NO. 03-1118

11/19/2021
R:\Traffic\Signals\Design\Signals\Electrical Details\W-5601GA_SIG_03-1118a.dgn
dseers

PROJECT REFERENCE NO.	SHEET NO.
W-5601GA	Sig. 2.2

LOGICAL I/O PROCESSOR PROGRAMMING DETAIL
TO PRODUCE SPECIAL FYA-PPLT SIGNAL SEQUENCE

(program controller as shown below)

1. FROM MAIN MENU PRESS '2' (PHASE CONTROL), THEN '1' (PHASE CONTROL FUNCTIONS). SCROLL TO THE BOTTOM OF THE MENU AND ENABLE ACT LOGIC COMMANDS 1,2,3,4,5 AND 6.

2. FROM MAIN MENU PRESS '6' (OUTPUTS), THEN '3' (LOGICAL I/O PROCESSOR).

```
LOGICAL I/O COMMAND #1  (+/-COMMAND#)
IF  ACTIVE PHASE       #7  IS ON
AND RED CLEAR ON PHASE #7  IS ON

SCROLL DOWN

THEN:
SET OUTPUT  ASSIGNMENT #39 ON
SET OUTPUT  ASSIGNMENT #40 OFF
```

NOTE: LOGIC FOR PHASE 7 RED CLEAR WHEN TRANSITIONING FROM PHASE 7 TO PHASE 2 (HEAD 72).

PRESS '+'

```
LOGICAL I/O COMMAND #2  (+/-COMMAND#)
IF  ACTIVE PHASE       #7  IS ON

SCROLL DOWN

THEN:
SET OUTPUT  ASSIGNMENT #41 OFF
```

NOTE: LOGIC FOR SWITCHING FLASHING YELLOW ARROW "OFF" DURING PHASE 7 (HEAD 72).

PRESS '+'

```
LOGICAL I/O COMMAND #3  (+/-COMMAND#)
IF  YELLOW ON PHASE    #7  IS ON

SCROLL DOWN

THEN:
SET OUTPUT  ASSIGNMENT #40 ON
```

NOTE: LOGIC FOR YELLOW ARROW CLEARANCE FROM PHASE 7 (HEAD 72).

```
LOGICAL I/O COMMAND #4  (+/-COMMAND#)
IF  ACTIVE PHASE       #7  IS ON
AND RED CLEAR ON PHASE #7  IS ON

SCROLL DOWN

THEN:
SET OUTPUT  ASSIGNMENT #42 ON
SET OUTPUT  ASSIGNMENT #43 OFF
```

NOTE: LOGIC FOR PHASE 7 RED CLEAR WHEN TRANSITIONING FROM PHASE 7 TO PHASE 2 (HEAD 71).

PRESS '+'

```
LOGICAL I/O COMMAND #5  (+/-COMMAND#)
IF  ACTIVE PHASE       #7  IS ON

SCROLL DOWN

THEN:
SET OUTPUT  ASSIGNMENT #44 OFF
```

NOTE: LOGIC FOR SWITCHING FLASHING YELLOW ARROW "OFF" DURING PHASE 7 (HEAD 71).

PRESS '+'

```
LOGICAL I/O COMMAND #6  (+/-COMMAND#)
IF  YELLOW ON PHASE    #7  IS ON

SCROLL DOWN

THEN:
SET OUTPUT  ASSIGNMENT #43 ON
```

NOTE: LOGIC FOR YELLOW ARROW CLEARANCE FROM PHASE 7 (HEAD 71).

LOGIC I/O PROCESSOR PROGRAMMING COMPLETE

OUTPUT REFERENCE SCHEDULE

OUTPUT 39 = Overlap D Red
OUTPUT 40 = Overlap D Yellow
OUTPUT 41 = Overlap D Green
OUTPUT 42 = Overlap C Red
OUTPUT 43 = Overlap C Yellow
OUTPUT 44 = Overlap C Green

OVERLAP PROGRAMMING DETAIL FOR DEFAULT PHASING

(program controller as shown below)

FROM MAIN MENU PRESS '8' (OVERLAPS), THEN '1' (VEHICLE OVERLAP SETTINGS).

PRESS '+' TWICE

```
PAGE 1: VEHICLE OVERLAP 'C' SETTINGS
PHASE:          |12345678910111213141516
VEH OVL PARENTS:|  X     X
VEH OVL NOT VEH:|
VEH OVL NOT PED:|
VEH OVL GRN EXT:|
STARTUP COLOR: _ RED  _ YELLOW  _ GREEN
FLASH COLORS:  _ RED  _ YELLOW  X GREEN
SELECT VEHICLE OVERLAP OPTIONS:   (Y/N)
FLASH YELLOW IN CONTROLLER FLASH?...N
GREEN EXTENSION (0-255 SEC).........0
YELLOW CLEAR (0=PARENT,3-25.5 SEC)..0.0
RED CLEAR (0=PARENT,0.1-25.5 SEC)...0.0
OUTPUT AS PHASE # (0=NONE, 1-16)....0
```

← NOTICE GREEN FLASH

PRESS '+' ONCE

```
PAGE 1: VEHICLE OVERLAP 'D' SETTINGS
PHASE:          |12345678910111213141516
VEH OVL PARENTS:|  X     X
VEH OVL NOT VEH:|
VEH OVL NOT PED:|
VEH OVL GRN EXT:|
STARTUP COLOR: _ RED  _ YELLOW  _ GREEN
FLASH COLORS:  _ RED  _ YELLOW  X GREEN
SELECT VEHICLE OVERLAP OPTIONS:   (Y/N)
FLASH YELLOW IN CONTROLLER FLASH?...N
GREEN EXTENSION (0-255 SEC).........0
YELLOW CLEAR (0=PARENT,3-25.5 SEC)..0.0
RED CLEAR (0=PARENT,0.1-25.5 SEC)...0.0
OUTPUT AS PHASE # (0=NONE, 1-16)....0
```

← NOTICE GREEN FLASH

OVERLAP PROGRAMMING COMPLETE

OVERLAP PROGRAMMING DETAIL FOR ALTERNATE PHASING

(program controller as shown below)

FROM MAIN MENU PRESS '8' (OVERLAPS), THEN '1' (VEHICLE OVERLAP SETTINGS). PRESS 'NEXT' TO ADVANCE TO PAGE 2.

PRESS '+' TWICE

NOTICE PAGE 2 →

```
PAGE 2: VEHICLE OVERLAP 'C' SETTINGS
PHASE:          |12345678910111213141516
VEH OVL PARENTS:|        X
VEH OVL NOT VEH:|
VEH OVL NOT PED:|
VEH OVL GRN EXT:|
STARTUP COLOR: _ RED  _ YELLOW  _ GREEN
FLASH COLORS:  _ RED  _ YELLOW  _ GREEN
SELECT VEHICLE OVERLAP OPTIONS:   (Y/N)
FLASH YELLOW IN CONTROLLER FLASH?...N
GREEN EXTENSION (0-255 SEC).........0
YELLOW CLEAR (0=PARENT,3-25.5 SEC)..0.0
RED CLEAR (0=PARENT,0.1-25.5 SEC)...0.0
OUTPUT AS PHASE # (0=NONE, 1-16)....0
```

PRESS '+' ONCE

NOTICE PAGE 2 →

```
PAGE 2: VEHICLE OVERLAP 'C' SETTINGS
PHASE:          |12345678910111213141516
VEH OVL PARENTS:|        X
VEH OVL NOT VEH:|
VEH OVL NOT PED:|
VEH OVL GRN EXT:|
STARTUP COLOR: _ RED  _ YELLOW  _ GREEN
FLASH COLORS:  _ RED  _ YELLOW  _ GREEN
SELECT VEHICLE OVERLAP OPTIONS:   (Y/N)
FLASH YELLOW IN CONTROLLER FLASH?...N
GREEN EXTENSION (0-255 SEC).........0
YELLOW CLEAR (0=PARENT,3-25.5 SEC)..0.0
RED CLEAR (0=PARENT,0.1-25.5 SEC)...0.0
OUTPUT AS PHASE # (0=NONE, 1-16)....0
```

OVERLAP PROGRAMMING COMPLETE

THIS ELECTRICAL DETAIL IS FOR THE SIGNAL DESIGN: 03-1118
DESIGNED: November 2021
SEALED: November 19, 2021
REVISED:

ELECTRICAL DETAIL SHEET 2 OF 8

DOCUMENT NOT CONSIDERED FINAL UNLESS ALL SIGNATURES COMPLETED

RK&K
P: (919) 878-9560
8601 Six Forks Road Suite 700 | Raleigh, North Carolina 27615-2965
NC License No. F-0112
Engineers | Construction Managers | Planners | Scientists
www.rkk.com
Responsive People | Creative Solutions

ELECTRICAL AND PROGRAMMING DETAILS FOR:

US 17 (OCEAN HIGHWAY)
AT THOMASBORO ROAD
SB U-TURN

Prepared for the Offices of:
Traffic Engineering Branch, Mobility and Safety Division
NC DEPARTMENT OF TRANSPORTATION
Traffic Engineering & Signal Management Section
750 N.Greenfield Pkwy,Garner,NC 27529

Division 3 | Brunswick County | Calabash

PLAN DATE: November 2021	REVIEWED BY: J O Deaton
PREPARED BY: M W Yalch	REVIEWED BY:

REVISIONS	INIT.	DATE

SEAL
NORTH CAROLINA PROFESSIONAL SEAL 07438 ENGINEER JAMES O. DEATON

DocuSigned by: JAMES O. Deaton 11/19/2021
40EF8AC439BD40F...
SIGNATURE DATE

SIG. INVENTORY NO. 03-1118

11/19/2021
R:\Traffic\Signals\Design\Signals\Electrical Details\W-5601GA_SIG_03-1118e.dgn
dsears

PROJECT REFERENCE NO.	SHEET NO.
W-5601GA	Sig. 2.3

INPUT ASSIGNMENT PROGRAMMING DETAIL FOR LONG VEHICLE OVERSPEED DETECTION SYSTEM PHASE HOLD INPUTS

(program controller as shown below)

FROM MAIN MENU PRESS '5' (INPUTS), THEN '+' UNTIL PIN 51 (INPUT 13) IS REACHED.

```
PAGE: 1 C1 PIN:51  HOLD PHASES
INPUT ASSIGNMENT #.....................13
DEBOUNCE TIME (0-25.5 SEC).............0.5
DELAY TIME (0-25.5 SEC)................0.0
HOLD-OVER TIME (0-25.5 SEC)............0.0
ASSIGNMENT SELECTION:
NOT ENABLED (Y/N)......................_
VEHICLE DETECTOR (1-64)................_
PEDESTRIAN DETECTOR (1-16).............._
ALTERNATE PED DETECTOR (1-16)........._
PREEMPT (1-10).........................._
INVERTED PREEMPT (1-10)..............._
STOP TIME (Y/N)........................_
FLASH SENSE (Y/N)......................_
DOOR OPEN (Y/N)........................_
MANUAL CONTROL ENABLE (Y/N)..........._
MANUAL CONTROL ADVANCE (Y/N)........._
SPECIAL FUNCTION ALARM (1-8)........._
TOD HOUR SYCHRONIZATION (0-23)......._
FORCE OFF RING (1-4)..................._
HOLD PHASES (1-16).....................2
PLAN (65=FLSH,66=FREE)..._  OFFSET#..._
CHANGE PHASE SEQUENCE PAGE (1-12)...._
CHANGE PHASE TIMING PAGE (1-4)......._
CHANGE PHASE CONTROL PAGE (1-4)......_
CHANGE OVERLAP CONTROL PAGE (1-4)...._
CHANGE INPUT PAGE (1-4).............._
CHANGE OUTPUT PAGE (1-4)............._
OVERRIDE PHASE CONTROL FUNCTION (Y)._
```

PRESS THE 'ENT KEY, THEN PRESS '+' UNTIL PIN '0' (INPUT 64) IS REACHED

```
PAGE: 1 C1 PIN:0  PLAN
INPUT ASSIGNMENT #.....................64
DEBOUNCE TIME (0-25.5 SEC).............0.5
DELAY TIME (0-25.5 SEC)................0.0
HOLD-OVER TIME (0-25.5 SEC)............0.0
ASSIGNMENT SELECTION:
NOT ENABLED (Y/N)......................_
VEHICLE DETECTOR (1-64)................_
PEDESTRIAN DETECTOR (1-16).............._
ALTERNATE PED DETECTOR (1-16)........._
PREEMPT (1-10).........................7
INVERTED PREEMPT (1-10)..............._
STOP TIME (Y/N)........................_
FLASH SENSE (Y/N)......................_
DOOR OPEN (Y/N)........................_
MANUAL CONTROL ENABLE (Y/N)..........._
MANUAL CONTROL ADVANCE (Y/N)........._
SPECIAL FUNCTION ALARM (1-8)........._
TOD HOUR SYCHRONIZATION (0-23)......._
FORCE OFF RING (1-4)..................._
HOLD PHASES (1-16).....................
PLAN (65=FLSH,66=FREE)..._  OFFSET#..._
CHANGE PHASE SEQUENCE PAGE (1-12)...._
CHANGE PHASE TIMING PAGE (1-4)......._
CHANGE PHASE CONTROL PAGE (1-4)......_
CHANGE OVERLAP CONTROL PAGE (1-4)...._
CHANGE INPUT PAGE (1-4).............._
CHANGE OUTPUT PAGE (1-4)............._
OVERRIDE PHASE CONTROL FUNCTION (Y)._
```

PROGRAMMING COMPLETE

FLASH PREEMPTION PROGRAMMING DETAIL FOR PREEMPT 7

(program controller as shown below)

THIS PREEMPT PLACES THE CONTROLLER IN FLASH IF THE LVOD HOLD TIME EXCEEDS 240 SECONDS.

FROM MAIN MENU PRESS 'A' (PREEMPTION), THEN '1' (STANDARD PREEMPTIONS). PRESS 'NEXT' UNTIL PREEMPTION #7 IS REACHED.

```
   PREEMPTION  #7  SETTINGS (NEXT:1-10)
INTERVAL/TIMING  |  CLEAR/DWELL PHASES
  GRN YEL  RED   |123456789101112131415 16
1  15  0.0  0.0  |      X
2 255  0.0  0.0  | X
3   0  0.0  0.0  |
4   0  0.0  0.0  |
5   1  0.0  0.0  | X
EXIT CALLS       |
                 |
          OPTIONS
PRIORITY (Y/N TO SELECT) .............HIGH
DELAY TIMER (0-255 SEC) ..............0.0
MIN GREEN BEFORE PRE (0= DEFAULT)....1
PED CLEAR BEFORE PRE (0= DEFAULT)....0
YELLOW CLEAR BEFORE PRE (0= DEFAULT).0.0
RED CLEAR BEFORE PRE (0= DEFAULT)....0.0
DWELL MIN TIMER (0-255 SEC) .........14
DWELL MAX TIMER (0=OFF,1-255MIN) ....0
DWELL HOLD-OVER TIMER (0-255) .......0
LATCH CALL? ..........................N
LINK TO NEXT PREEMPT? ................N
ENABLE BACKUP PROTECTION? ............N
HOLD CLEAR 1 PHASES DURING DELAY? ...N
FAST GREEN FLASH DWELL PHASES? ......N
PED CLEARANCE THROUGH YELLOW? .......N
INHIBIT OVERLAP GREEN EXTENSION? ....N
SERVICE DURING SOFTWARE FLASH? ......N
REST IN RED DURING DWELL INTERVAL? ..N
FLASH DWELL INTERVAL? ................Y
ALLOW PEDS IN DWELL INTERVAL? .......N
RE-TIME DWELL INTERVAL? ..............N
OVERLAPS:                | ABCDEFGHIJKLMNOP
DWELL INT FLASH YELLOW   |
OMIT OVERLAPS:           |
```

LOGICAL I/O PROCESSOR PROGRAMMING DETAIL TO PUT CABINET IN FLASH UPON LVODS FAIL

(program controller as shown below)

1. From Main Menu press '2' (Phase Control), then '1' (Phase Control Functions). Scroll to the bottom of the menu and Enable Act Logic Command 7.

2. From Main Menu press '6' (Outputs), Then '3' (Logical I/O Processor).

3. The programming shown below will place the controller in flash if the output of the Long Vehicle Detection Unit is active for longer than 4 minutes.

```
  LOGICAL I/O COMMAND #7  (+/-COMMAND#)
IF  INPUT   ASSIGNMENT #13 IS ON

                 |
                 |
            SCROLL DOWN

THEN:
    DELAY FOR  240.0 SECONDS
SET INPUT   ASSIGNMENT #64 ON
```

LOGIC I/O PROCESSOR PROGRAMMING COMPLETE

INPUT 13 = LVODS Input (Ø2 Hold)
INPUT 64 = Preempt 7

AC ISOLATOR (MODEL 252) OUTPUT PROGRAMMING DETAIL

(set DIP switches as shown below)

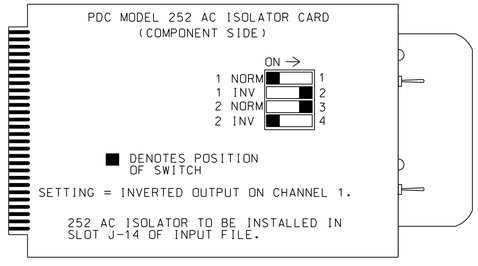

NOTE: IF ANOTHER MANUFACTURER TYPE OF AC ISOLATOR IS USED, OUTPUT PROGRAMMING IS LIKELY NOT TO EQUATE TO THAT SHOWN ABOVE.

THIS ELECTRICAL DETAIL IS FOR
THE SIGNAL DESIGN: Ø3-1118
DESIGNED: November 2021
SEALED: November 19, 2021
REVISED:

ELECTRICAL DETAIL SHEET 3 OF 8

DOCUMENT NOT CONSIDERED FINAL UNLESS ALL SIGNATURES COMPLETED

RK&K
P: (919) 878-9560
8601 Six Forks Road Suite 700 | Raleigh, North Carolina 27615-2965
NC License No. F-0112
Engineers | Construction Managers | Planners | Scientists
www.rkk.com
Responsive People | Creative Solutions

ELECTRICAL AND PROGRAMMING DETAILS FOR:

Prepared for the Offices of:
NC Department of Transportation Mobility and Safety Division Traffic Engineering Branch Signal Management Section
750 N.Greenfield Pkwy.Garner,NC 27529

US 17 (OCEAN HIGHWAY)
AT THOMASBORO ROAD
SB U-TURN

Division 3 | Brunswick County | Calabash

PLAN DATE: November 2021 | REVIEWED BY: J O Deaton
PREPARED BY: M W Yalch | REVIEWED BY:

REVISIONS	INIT.	DATE

SEAL
NORTH CAROLINA PROFESSIONAL SEAL 07438 ENGINEER JAMES O. DEATON

DocuSigned by: JAMES O. Deaton 11/19/2021
SIGNATURE DATE

SIG. INVENTORY NO. 03-1118

11/19/2021
R:\Traffic\Signals\Design\Signals\Electrical Details\W-5601GA_SIG_03-1118e.dgn
dsears

PROJECT REFERENCE NO.	SHEET NO.
W-5601GA	Sig. 2.4

WIRING DETAIL FOR NORTHSTAR CONTROLS NQ4 LONG VEHICLE / OVERSPEED DETECTION SYSTEM

(wire unit as shown below)

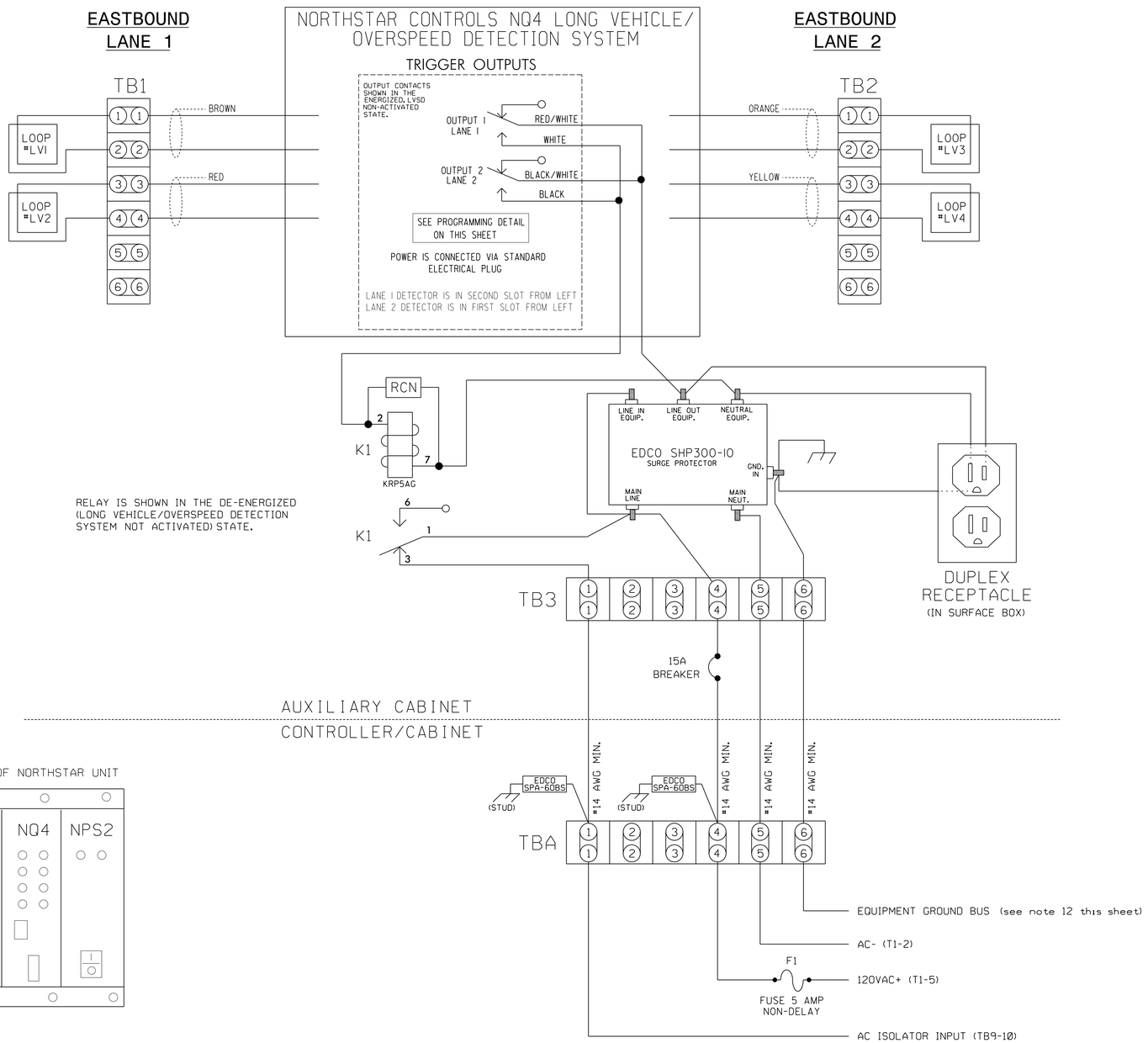

FRONT VIEW OF NORTHSTAR UNIT

NOTES

1. All loop lead-ins shall be twisted.
2. Loop spacing is critical to the proper operation of this Overspeed Detection System. Make sure loop spacing is correctly programmed in NQ4 Unit.
3. Ensure that connectors on rear of NQ4 are seated securely.
4. NQ4 Unit shall be located in an auxiliary cabinet adjacent to Speed Warning System loops.
5. Unit power is connected by standard electrical plug.
6. Terminal strips TB1, TB2, TB3, & TBA to be added by installer.
7. Relay 'K1' is a SPDT with an 120VAC coil. Potter & Brumfield no. KRP5AGAG, Dot Material no. 625028600.
8. The RC Network across the coil of 'K1' is a .1 micro farad, 100 ohm. Dot Material no. 106018075. P&B no. 104M060C100
9. EDCO SPA-60BS is a surge protector for 120VAC interconnect circuits. Dot Material no. 625022076.
10. EDCO SHP300-10 is an AC service surge protector. Dot Material no. 625022075.
11. Do not install ground rods at auxiliary cabinet.
12. Install equipment ground from controller cabinet to auxiliary cabinet if not already present.
13. Install disconnect if there is no disconnect present at auxiliary cabinet.
14. IMPORTANT! A jumper must be installed between input file terminals J14-E and J14-K if not already present.
15. IMPORTANT! For proper operation of the Long Vehicle Detection Unit, tie TB9-12 to AC neutral.
16. IMPORTANT! Make sure channel 1 of AC Isolator card inserted at input file position J14 is set for inverted operation. See the detail on sheet 3.

NORTHSTAR CONTROLS MODEL NQ4 PROGRAMMING DETAIL

(program unit as shown)

NOTE: UNIT MUST BE PROGRAMMED USING PC AND TERMINAL EMULATION PROGRAM. FOR CONNECTION TO TERMINAL EMULATOR REFER TO NO4 OPERATION MANUAL.

PROGRAM NQ4 BY TYPING THE FOLLOWING COMMANDS

1. SET SPEED=55
2. SET LENGTH=22'
3. SET ALARMTIME=12
4. SET SEPARATION=16' (LEADING EDGE TO LEADING EDGE) (THIS VALUE MAY VARY, PROGRAM ACTUAL MEASURED SEPARATION)
5. SET LOOP LENGTH=6' (THIS VALUE MAY VARY, PROGRAM ACTUAL MEASURED LOOP LENGTH)
6. SAVE

NOTE

PROGRAMMING APPLIES TO BOTH LANE 1 AND LANE 2

THIS ELECTRICAL DETAIL IS FOR THE SIGNAL DESIGN: 03-1118
DESIGNED: November 2021
SEALED: November 19, 2021
REVISED:

RK&K
P: (919) 878-9560
8601 Six Forks Road Suite 700 | Raleigh, North Carolina 27615-2965
NC License No. F-0112
Engineers | Construction Managers | Planners | Scientists
www.rkk.com
Responsive People | Creative Solutions

ELECTRICAL DETAIL SHEET 4 OF 8

DOCUMENT NOT CONSIDERED FINAL UNLESS ALL SIGNATURES COMPLETED

ELECTRICAL AND PROGRAMMING DETAILS FOR:

US 17 (OCEAN HIGHWAY) AT THOMASBORO ROAD SB U-TURN

Division 3 | Brunswick County | Calabash

PLAN DATE:	November 2021	REVIEWED BY:	J O Deaton
PREPARED BY:	M W Yalch	REVIEWED BY:	

REVISIONS	INIT.	DATE

Prepared for the Offices of:
Traffic Engineering Branch, Mobility and Safety Division
STATE OF NORTH CAROLINA DEPARTMENT OF TRANSPORTATION
Traffic Engineering & Signal Management Section
750 N.Greenfield Pkwy.Garner,NC 27529

SEAL
NORTH CAROLINA PROFESSIONAL SEAL 07438 ENGINEER JAMES O. DEATON

DocuSigned by: James O. Deaton 11/19/2021
SIGNATURE DATE

SIG. INVENTORY NO. 03-1118

11/19/2021
R:\Traffic\Signals\Design\Signals\Electrical Details\W-5601GA_SIG_03-1118e.dgn
dsears

PROJECT REFERENCE NO.	SHEET NO.
W-5601GA	Sig. 2.5

ADVANCE BEACON
OUTPUT ASSIGNMENT PROGRAMMING DETAIL

(program controller as shown below)

FROM MAIN MENU PRESS '6' (OUTPUTS), THEN '1' (OUTPUT ASSIGNMENTS). PRESS '+' UNTIL OUTPUT #33 (PIN 35) IS REACHED.

```
PAGE:1  C1 PIN:35  NOT ENABLED
OUTPUT ASSIGNMENT #.................33
FREQUENCY (0=DEFAULT) (0-25.5 HZ)...1.0
DUTY CYCLE (0=DEFAULT) (0 - 100%)...50
MODE (0=SOLID,1=FLASH)..............1
SELECT ASSIGNMENT:
NOT ENABLED.........................Y
VEHICLE PHASE.......................
PEDESTRIAN PHASE....................
VEHICLE OVERLAP.....................
PEDESTRIAN OVERLAP..................
WATCHDOG............................
DETECTOR RESET......................
ADVANCE BEACON......................Y
OUT OF PHASE FLASHER................
CONTROLLER FLASH....................
RUN FREE............................
RESERVED............................
PREEMPT.............................
SOFT PREEMPT........................
ANY PREEMPT.........................
COORDINATION PLAN...................
OFFSET..............................
PHASE CHECK.........................
PHASE ON............................
PHASE NEXT..........................
```

THE FIRST THREE PROGRAMMING ROWS DEFINE THE OUTPUT TO FLASH, ALONG WITH THE RATE AT WHICH IT WILL FLASH.

THE NOT ENABLED 'Y' WILL REMAIN UNTIL THE FUNCTION OF THIS OUTPUT IS CHANGED. DO NOT ENTER AN 'N'.

```
PAGE:1  C1 PIN:35  NOT ENABLED
SELECT BEACON INDEX (1-4)...........1
```

WHEN A 'Y' IS ENTERED FOR 'ADVANCE BEACON' THE SCREEN SHOWN ABOVE WILL APPEAR. ENTER DATA AS SHOWN.

PRESS THE 'ENT' KEY AFTER INPUTTING DATA, THEN 'ESC'.

DISPLAY WILL NOW SHOW THE SPECIFIED OUTPUT ASSIGNED AS 'ADVANCE BEACON' AS SHOWN BELOW.

```
PAGE:1  C1 PIN:35  ADVANCE BEACON
OUTPUT ASSIGNMENT #.................33
FREQUENCY (0=DEFAULT) (0-25.5 HZ)...1.0
DUTY CYCLE (0=DEFAULT) (0 - 100%)...50
MODE (0=SOLID,1=FLASH)..............1
SELECT ASSIGNMENT:
NOT ENABLED.........................
VEHICLE PHASE.......................
PEDESTRIAN PHASE....................
VEHICLE OVERLAP.....................
PEDESTRIAN OVERLAP..................
WATCHDOG............................
DETECTOR RESET......................
ADVANCE BEACON......................Y
OUT OF PHASE FLASHER................
CONTROLLER FLASH....................
RUN FREE............................
RESERVED............................
PREEMPT.............................
SOFT PREEMPT........................
ANY PREEMPT.........................
COORDINATION PLAN...................
OFFSET..............................
PHASE CHECK.........................
PHASE ON............................
PHASE NEXT..........................
```

FROM MAIN MENU PRESS '6' (OUTPUTS), THEN '1' (OUTPUT ASSIGNMENTS). PRESS '+' UNTIL OUTPUT #34 (PIN 36) IS REACHED.

```
PAGE:1  C1 PIN:36  NOT ENABLED
OUTPUT ASSIGNMENT #.................34
FREQUENCY (0=DEFAULT) (0-25.5 HZ)...0.0
DUTY CYCLE (0=DEFAULT) (0 - 100%)...0
MODE (0=SOLID,1=FLASH)..............0
SELECT ASSIGNMENT:
NOT ENABLED.........................Y
VEHICLE PHASE.......................
PEDESTRIAN PHASE....................
VEHICLE OVERLAP.....................
PEDESTRIAN OVERLAP..................
WATCHDOG............................
DETECTOR RESET......................
ADVANCE BEACON......................
OUT OF PHASE FLASHER................Y
CONTROLLER FLASH....................
RUN FREE............................
RESERVED............................
PREEMPT.............................
SOFT PREEMPT........................
ANY PREEMPT.........................
COORDINATION PLAN...................
OFFSET..............................
PHASE CHECK.........................
PHASE ON............................
PHASE NEXT..........................
```

THE NOT ENABLED 'Y' WILL REMAIN UNTIL THE FUNCTION OF THIS OUTPUT IS CHANGED. DO NOT ENTER AN 'N'.

```
PAGE:1  C1 PIN:36  NOT ENABLED
SELECT OUTPUT ASSIGNMENT (1-64).....33
```

WHEN A 'Y' IS ENTERED FOR 'OUT OF PHASE FLASHER' THE SCREEN SHOWN ABOVE WILL APPEAR. ENTER DATA AS SHOWN.

PRESS THE 'ENT' KEY AFTER INPUTTING DATA, THEN 'ESC'.

DISPLAY WILL NOW SHOW THE SPECIFIED OUTPUT ASSIGNED AS 'OUT OF PHASE FLASHER' AS SHOWN BELOW.

```
PAGE:1  C1 PIN:36  OUT OF PHASE FLASHER
OUTPUT ASSIGNMENT #.................34
FREQUENCY (0=DEFAULT) (0-25.5 HZ)...0.0
DUTY CYCLE (0=DEFAULT) (0 - 100%)...0
MODE (0=SOLID,1=FLASH)..............0
SELECT ASSIGNMENT:
NOT ENABLED.........................
VEHICLE PHASE.......................
PEDESTRIAN PHASE....................
VEHICLE OVERLAP.....................
PEDESTRIAN OVERLAP..................
WATCHDOG............................
DETECTOR RESET......................
ADVANCE BEACON......................
OUT OF PHASE FLASHER................Y
CONTROLLER FLASH....................
RUN FREE............................
RESERVED............................
PREEMPT.............................
SOFT PREEMPT........................
ANY PREEMPT.........................
COORDINATION PLAN...................
OFFSET..............................
PHASE CHECK.........................
PHASE ON............................
PHASE NEXT..........................
```

OUTPUT REFERENCE SCHEDULE

OUTPUT 33 = Ø2 Ped Yellow
OUTPUT 34 = Ø6 Ped Yellow

ADVANCE BEACON PROGRAMMING DETAIL

(program controller as shown below)

1. FROM MAIN MENU PRESS '6' (OUTPUTS), THEN '2' (OUTPUT BEACON SETTINGS).

```
OUTPUT BEACON SETTINGS
TRIGGER PHASES: |12345678910111213141516
BEACON #1 OFF   | X
BEACON #2 OFF   |
BEACON #3 OFF   |
BEACON #4 OFF   |
          BEACON |   1   2   3   4
OFF DELAY TIME (0-255)|   0   0   0   0
ON DELAY TIME  (0-255)|   0   0   0   0
STOP-TIME HOLD (0-255)|   3   0   0   0
```

SCROLL DOWN TO VIEW ALL DATA ↓

← NOTICE STOP TIME HOLD SETTINGS

ADVANCE BEACON PROGRAMMING COMPLETE

NOTE: AN OUTPUT HAS TO BE ASSIGNED AS AN ADVANCE BEACON IN ORDER FOR PROPER OPERATION TO OCCUR. SEE OUTPUT ASSIGNMENT DETAIL ON THIS SHEET.

THIS ELECTRICAL DETAIL IS FOR THE SIGNAL DESIGN: Ø3-1118
DESIGNED: November 2021
SEALED: November 19, 2021
REVISED:

RK&K
P: (919) 878-9560
8601 Six Forks Road Suite 700 | Raleigh, North Carolina 27615-2965
NC License No. F-0112
Engineers | Construction Managers | Planners | Scientists
www.rkk.com
Responsive People | Creative Solutions

ADVANCE BEACON WIRING DETAIL

(wire flashers as shown below)

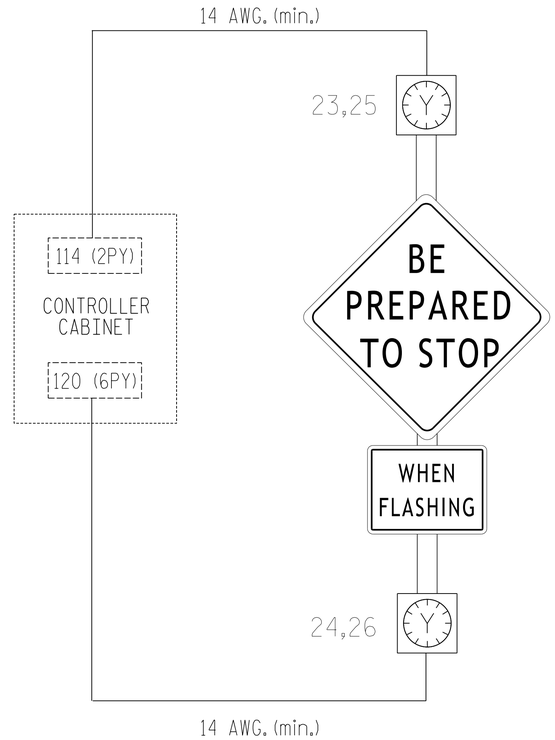

IMPORTANT

1. REMOVE, TAPE AND LABEL CONFLICT MONITOR WIRE ATTACHED TO THE REAR OF TERMINAL 114 (2PY) AND TERMINAL 120 (6PY).
2. INSERT LOADSWITCH FOR S3 AND S9.
3. MAKE SURE LOAD RESISTORS ARE IN PLACE AS SHOWN IN LOAD RESISTOR INSTALLATION DETAIL ON SHEET 1.
4. TO ACTIVATE SIGN OPERATION AS INDICATED ON THE SIGNAL PLANS, RE-ASSIGN OUTPUT 33 AND 34 AS SHOWN ON THIS SHEET.

ELECTRICAL DETAIL SHEET 5 OF 8

DOCUMENT NOT CONSIDERED FINAL UNLESS ALL SIGNATURES COMPLETED

ELECTRICAL AND PROGRAMMING DETAILS FOR:

Prepared for the Offices of:
Traffic Engineering and Safety Systems Branch
North Carolina Department of Transportation
Traffic Signal Management Section
750 N.Greenfield Pkwy.Garner,NC 27529

US 17 (OCEAN HIGHWAY) AT THOMASBORO ROAD SB U-TURN

Division 3 | Brunswick County | Calabash

PLAN DATE:	November 2021	REVIEWED BY:	J O Deaton
PREPARED BY:	M W Yalch	REVIEWED BY:	

REVISIONS	INIT.	DATE

SEAL
NORTH CAROLINA PROFESSIONAL SEAL 07438 ENGINEER JAMES O. DEATON

DocuSigned by: JAMES O. Deaton 11/19/2021
SIGNATURE | DATE

SIG. INVENTORY NO. 03-1118

11/19/2021
R:\Traffic\Signals\Design\Signals\Electrical Details\W-5601GA_SIG_03-1118a.dgn
dsears

PROJECT REFERENCE NO.	SHEET NO.
W-5601GA	Sig. 2.6

INPUT PAGE 2 ASSIGNMENT PROGRAMMING DETAIL FOR ALTERNATE PHASING - LOOP 7A

(program controller as shown below)

NOTES: 1. THIS PROGRAMMING APPLIES FOR INPUT PAGE 2 ONLY. INPUT PAGE 1 WILL USE STANDARD DEFAULT SETTINGS. THIS PROGRAMMING IS NECESSARY FOR PROPER DETECTOR OPERATION DURING ALTERNATE PHASING OPERATION.

2. THE PROGRAMMING BELOW REASSIGNS DETECTOR 57 TO INPUT #4 SO THAT THE DELAY ON LOOP 7A CAN BE REDUCED FROM 15 SECONDS TO 0 SECONDS.

FROM MAIN MENU PRESS '5' (INPUTS), THEN PRESS 'NEXT' TO GET TO INPUT PAGE '2'. PRESS THE '+' KEY UNTIL INPUT 4 IS REACHED.

```
PAGE: 2 C1 PIN:42  VEHICLE DETECTOR
INPUT ASSIGNMENT #.................4
DEBOUNCE TIME (0-25.5 SEC).........0.5
DELAY TIME (0-25.5 SEC).............0.0
HOLD-OVER TIME (0-25.5 SEC).........0.0
ASSIGNMENT SELECTION:
NOT ENABLED (Y/N)...................
VEHICLE DETECTOR (1-64).............8
PEDESTRIAN DETECTOR (1-16).........
ALTERNATE PED DETECTOR (1-16).......
PREEMPT (1-10)......................
INVERTED PREEMPT (1-10).............
STOP TIME (Y/N).....................
FLASH SENSE (Y/N)...................
DOOR OPEN (Y/N).....................
MANUAL CONTROL ENABLE (Y/N).........
MANUAL CONTROL ADVANCE (Y/N)........
SPECIAL FUNCTION ALARM (1-8)........
TOD HOUR SYCHRONIZATION (0-23)......
FORCE OFF RING (1-4)................
HOLD PHASES (1-16)..................
PLAN (65=FLSH,66=FREE)...  OFFSET#..
CHANGE PHASE SEQUENCE PAGE (1-12)...
CHANGE PHASE TIMING PAGE (1-4)......
CHANGE PHASE CONTROL PAGE (1-4).....
CHANGE OVERLAP CONTROL PAGE (1-4)...
CHANGE INPUT PAGE (1-4).............
CHANGE OUTPUT PAGE (1-4)............
OVERRIDE PHASE CONTROL FUNCTION (Y).
```

ENTER '57' TO REASSIGN THE VEHICLE DETECTOR FOR THIS INPUT

```
PAGE: 2 C1 PIN:42  VEHICLE DETECTOR
INPUT ASSIGNMENT #.................4
DEBOUNCE TIME (0-25.5 SEC).........0.5
DELAY TIME (0-25.5 SEC).............0.0
HOLD-OVER TIME (0-25.5 SEC).........0.0
ASSIGNMENT SELECTION:
NOT ENABLED (Y/N)...................
VEHICLE DETECTOR (1-64).............57
PEDESTRIAN DETECTOR (1-16).........
ALTERNATE PED DETECTOR (1-16).......
PREEMPT (1-10)......................
INVERTED PREEMPT (1-10).............
STOP TIME (Y/N).....................
FLASH SENSE (Y/N)...................
DOOR OPEN (Y/N).....................
MANUAL CONTROL ENABLE (Y/N).........
MANUAL CONTROL ADVANCE (Y/N)........
SPECIAL FUNCTION ALARM (1-8)........
TOD HOUR SYCHRONIZATION (0-23)......
FORCE OFF RING (1-4)................
HOLD PHASES (1-16)..................
PLAN (65=FLSH,66=FREE)...  OFFSET#..
CHANGE PHASE SEQUENCE PAGE (1-12)...
CHANGE PHASE TIMING PAGE (1-4)......
CHANGE PHASE CONTROL PAGE (1-4).....
CHANGE OVERLAP CONTROL PAGE (1-4)...
CHANGE INPUT PAGE (1-4).............
CHANGE OUTPUT PAGE (1-4)............
OVERRIDE PHASE CONTROL FUNCTION (Y).
```

(LOOP 7A - PHASE 7)

PROGRAMMING COMPLETE

FROM MAIN MENU PRESS '7' (DETECTORS), THEN PRESS '1' FOR VEHICLE DETECTORS. PRESS THE '-' KEY TO GET TO VEHICLE DETECTOR #57.

```
VEHICLE DETECTOR #57  SETTINGS (+-,1-64)
SETTING:                          (Y/N)
ENABLE DETECTOR.....................N
ENABLE LOGGING......................N
ENABLE DIAGNOSTICS..................N
SPEED TRAP..........................N
CALL DETECTOR.......................Y
EXTENSION DETECTOR..................Y
MODE 2 STOP BAR.....................N
SWITCHING DETECTOR..................N
DUPLICATING DETECTOR................N
ENABLE FULL TIME DELAY..............N
IF FAILED, SET MIN RECALL?..........N
IF FAILED, SET MAX1 RECALL?.........N
IF FAILED, SET MAX2 RECALL?.........N
PHASE#           ¦1234567891011121314516
PHASES ASSIGNED ¦
SWITCH/DUPLICATE¦
LOOP SIZE (0-255 FT).................6
SPEED TRAP DISTANCE (0-255 FT)......0
STOP BAR TIME (0-255 SEC)...........0
STRETCH (0-25.5 SEC)................0.0
DELAY (0-255 SEC)...................0
MAX CALLS/MIN (0-255)...............255
MIN CALLS/DIAGNOSTIC PERIOD (0-255).0
MAX OCCUPANCY (0-100%)..............100
EXTENSION DISABLE TIME (0-255 SEC)..0
QUEUE MAX OCCUPANCY TIME (0-255)....0
QUEUE GAP RESET TIME (0-25.5).......0.0
PREEMPTION INDEX FOR QUEUE (0-10)...0
```

ENTER 'Y' FOR ENABLE DETECTOR

ENTER '7' FOR PHASES ASSIGNED

ENSURE DELAY IS '0'

```
VEHICLE DETECTOR #57  SETTINGS (+-,1-64)
SETTING:                          (Y/N)
ENABLE DETECTOR.....................Y
ENABLE LOGGING......................N
ENABLE DIAGNOSTICS..................N
SPEED TRAP..........................N
CALL DETECTOR.......................Y
EXTENSION DETECTOR..................Y
MODE 2 STOP BAR.....................N
SWITCHING DETECTOR..................N
DUPLICATING DETECTOR................N
ENABLE FULL TIME DELAY..............N
IF FAILED, SET MIN RECALL?..........N
IF FAILED, SET MAX1 RECALL?.........N
IF FAILED, SET MAX2 RECALL?.........N
PHASE#           ¦1234567891011121314516
PHASES ASSIGNED ¦      X
SWITCH/DUPLICATE¦
LOOP SIZE (0-255 FT).................6
SPEED TRAP DISTANCE (0-255 FT)......0
STOP BAR TIME (0-255 SEC)...........0
STRETCH (0-25.5 SEC)................0.0
DELAY (0-255 SEC)...................0
MAX CALLS/MIN (0-255)...............255
MIN CALLS/DIAGNOSTIC PERIOD (0-255).0
MAX OCCUPANCY (0-100%)..............100
EXTENSION DISABLE TIME (0-255 SEC)..0
QUEUE MAX OCCUPANCY TIME (0-255)....0
QUEUE GAP RESET TIME (0-25.5).......0.0
PREEMPTION INDEX FOR QUEUE (0-10)...0
```

DETECTOR PROGRAMMING COMPLETE

NOTE: DETECTOR IS PROGRAMMED PER THE INPUT FILE CONNECTION AND PROGRAMMING CHART SHOWN ON SHEET 1.

THIS ELECTRICAL DETAIL IS FOR THE SIGNAL DESIGN: 03-1118
DESIGNED: November 2021
SEALED: November 19, 2021
REVISED:

ELECTRICAL DETAIL SHEET 6 OF 8

DOCUMENT NOT CONSIDERED FINAL UNLESS ALL SIGNATURES COMPLETED

RK&K
P: (919) 878-9560
8601 Six Forks Road Suite 700 | Raleigh, North Carolina 27615-2965
NC License No. F-0112
Engineers | Construction Managers | Planners | Scientists
www.rkk.com
Responsive People | Creative Solutions

ELECTRICAL AND PROGRAMMING DETAILS FOR:

Prepared for the Offices of:
NC Department of Transportation Mobility and Safety Division Traffic Engineering Branch Signal Management Section
750 N.Greenfield Pkwy,Garner,NC 27529

US 17 (OCEAN HIGHWAY)
AT THOMASBORO ROAD
SB U-TURN

Division 3 | Brunswick County | Calabash

PLAN DATE: November 2021 | REVIEWED BY: J O Deaton
PREPARED BY: M W Yalch | REVIEWED BY:

REVISIONS	INIT.	DATE

SEAL
NORTH CAROLINA PROFESSIONAL SEAL 07438 ENGINEER JAMES O. DEATON

DocuSigned by: James O. Deaton 11/19/2021
40EF8AC439BD40E...
SIGNATURE DATE

SIG. INVENTORY NO. 03-1118

11/19/2021
R:\Traffic\Signals\Design\Signals\Electrical Details\W-5601GA_SIG_03-1118e.dgn
dsears

PROJECT REFERENCE NO.	SHEET NO.
W-5601GA	Sig. 2.7

INPUT PAGE 2 ASSIGNMENT PROGRAMMING DETAIL FOR ALTERNATE PHASING - LOOP 7B

(program controller as shown below)

NOTES: 1. THIS PROGRAMMING APPLIES FOR INPUT PAGE 2 ONLY. INPUT PAGE 1 WILL USE STANDARD DEFAULT SETTINGS. THIS PROGRAMMING IS NECESSARY FOR PROPER DETECTOR OPERATION DURING ALTERNATE PHASING OPERATION.

2. THE PROGRAMMING BELOW REASSIGNS DETECTOR 58 TO INPUT #8 SO THAT THE DELAY ON LOOP 7B CAN BE REDUCED FROM 15 SECONDS TO 0 SECONDS.

FROM MAIN MENU PRESS '5' (INPUTS), THEN PRESS 'NEXT' TO GET TO INPUT PAGE '2'. PRESS THE '+' KEY UNTIL INPUT 8 IS REACHED.

```
PAGE: 2 C1 PIN:46  VEHICLE DETECTOR
INPUT ASSIGNMENT #.................8
DEBOUNCE TIME (0-25.5 SEC).........0.5
DELAY TIME (0-25.5 SEC).............0.0
HOLD-OVER TIME (0-25.5 SEC).........0.0
ASSIGNMENT SELECTION:
NOT ENABLED (Y/N)..................._
VEHICLE DETECTOR (1-64).............18
PEDESTRIAN DETECTOR (1-16).........._
ALTERNATE PED DETECTOR (1-16)......._
PREEMPT (1-10)......................._
INVERTED PREEMPT (1-10)............._
STOP TIME (Y/N)......................_
FLASH SENSE (Y/N)...................._
DOOR OPEN (Y/N)......................_
MANUAL CONTROL ENABLE (Y/N).........._
MANUAL CONTROL ADVANCE (Y/N)........._
SPECIAL FUNCTION ALARM (1-8)........._
TOD HOUR SYCHRONIZATION (0-23)......._
FORCE OFF RING (1-4)................._
HOLD PHASES (1-16)..................._
PLAN (65=FLSH,66=FREE)..._  OFFSET#..._
CHANGE PHASE SEQUENCE PAGE (1-12)...._
CHANGE PHASE TIMING PAGE (1-4)......._
CHANGE PHASE CONTROL PAGE (1-4)....._
CHANGE OVERLAP CONTROL PAGE (1-4)...._
CHANGE INPUT PAGE (1-4).............._
CHANGE OUTPUT PAGE (1-4)............._
OVERRIDE PHASE CONTROL FUNCTION (Y)._
```

→ ENTER '58' TO REASSIGN THE VEHICLE DETECTOR FOR THIS INPUT →

```
PAGE: 2 C1 PIN:46  VEHICLE DETECTOR
INPUT ASSIGNMENT #.................8
DEBOUNCE TIME (0-25.5 SEC).........0.5
DELAY TIME (0-25.5 SEC).............0.0
HOLD-OVER TIME (0-25.5 SEC).........0.0
ASSIGNMENT SELECTION:
NOT ENABLED (Y/N)..................._
VEHICLE DETECTOR (1-64).............58
PEDESTRIAN DETECTOR (1-16).........._
ALTERNATE PED DETECTOR (1-16)......._
PREEMPT (1-10)......................._
INVERTED PREEMPT (1-10)............._
STOP TIME (Y/N)......................_
FLASH SENSE (Y/N)...................._
DOOR OPEN (Y/N)......................_
MANUAL CONTROL ENABLE (Y/N).........._
MANUAL CONTROL ADVANCE (Y/N)........._
SPECIAL FUNCTION ALARM (1-8)........._
TOD HOUR SYCHRONIZATION (0-23)......._
FORCE OFF RING (1-4)................._
HOLD PHASES (1-16)..................._
PLAN (65=FLSH,66=FREE)..._  OFFSET#..._
CHANGE PHASE SEQUENCE PAGE (1-12)...._
CHANGE PHASE TIMING PAGE (1-4)......._
CHANGE PHASE CONTROL PAGE (1-4)....._
CHANGE OVERLAP CONTROL PAGE (1-4)...._
CHANGE INPUT PAGE (1-4).............._
CHANGE OUTPUT PAGE (1-4)............._
OVERRIDE PHASE CONTROL FUNCTION (Y)._
```

(LOOP 7B - PHASE 7)

PROGRAMMING COMPLETE

FROM MAIN MENU PRESS '7' (DETECTORS), THEN PRESS '1' FOR VEHICLE DETECTORS. PRESS THE '-' KEY TO GET TO VEHICLE DETECTOR #58.

```
VEHICLE DETECTOR #58  SETTINGS (+-,1-64)
SETTING:                          (Y/N)
ENABLE DETECTOR.....................N
ENABLE LOGGING......................N
ENABLE DIAGNOSTICS..................N
SPEED TRAP..........................N
CALL DETECTOR.......................Y
EXTENSION DETECTOR..................Y
MODE 2 STOP BAR.....................N
SWITCHING DETECTOR..................N
DUPLICATING DETECTOR................N
ENABLE FULL TIME DELAY..............N
IF FAILED, SET MIN RECALL?..........N
IF FAILED, SET MAX1 RECALL?.........N
IF FAILED, SET MAX2 RECALL?.........N
PHASE#          ¦12345678910111213141516
PHASES ASSIGNED ¦
SWITCH/DUPLICATE¦
LOOP SIZE (0-255 FT)................6
SPEED TRAP DISTANCE (0-255 FT)......0
STOP BAR TIME (0-255 SEC)...........0
STRETCH (0-25.5 SEC)................0.0
DELAY (0-255 SEC)...................0
MAX CALLS/MIN (0-255)..............255
MIN CALLS/DIAGNOSTIC PERIOD (0-255).0
MAX OCCUPANCY (0-100%).............100
EXTENSION DISABLE TIME (0-255 SEC)..0
QUEUE MAX OCCUPANCY TIME (0-255)....0
QUEUE GAP RESET TIME (0-25.5).......0.0
PREEMPTION INDEX FOR QUEUE (0-10)...0
```

→ ENTER 'Y' FOR ENABLE DETECTOR →

→ ENTER '7' FOR PHASES ASSIGNED →

→ ENSURE DELAY IS '0' →

```
VEHICLE DETECTOR #58  SETTINGS (+-,1-64)
SETTING:                          (Y/N)
ENABLE DETECTOR.....................Y
ENABLE LOGGING......................N
ENABLE DIAGNOSTICS..................N
SPEED TRAP..........................N
CALL DETECTOR.......................Y
EXTENSION DETECTOR..................Y
MODE 2 STOP BAR.....................N
SWITCHING DETECTOR..................N
DUPLICATING DETECTOR................N
ENABLE FULL TIME DELAY..............N
IF FAILED, SET MIN RECALL?..........N
IF FAILED, SET MAX1 RECALL?.........N
IF FAILED, SET MAX2 RECALL?.........N
PHASE#          ¦12345678910111213141516
PHASES ASSIGNED ¦      X
SWITCH/DUPLICATE¦
LOOP SIZE (0-255 FT)................6
SPEED TRAP DISTANCE (0-255 FT)......0
STOP BAR TIME (0-255 SEC)...........0
STRETCH (0-25.5 SEC)................0.0
DELAY (0-255 SEC)...................0
MAX CALLS/MIN (0-255)..............255
MIN CALLS/DIAGNOSTIC PERIOD (0-255).0
MAX OCCUPANCY (0-100%).............100
EXTENSION DISABLE TIME (0-255 SEC)..0
QUEUE MAX OCCUPANCY TIME (0-255)....0
QUEUE GAP RESET TIME (0-25.5).......0.0
PREEMPTION INDEX FOR QUEUE (0-10)...0
```

DETECTOR PROGRAMMING COMPLETE

NOTE: DETECTOR IS PROGRAMMED PER THE INPUT FILE CONNECTION AND PROGRAMMING CHART SHOWN ON SHEET 1.

THIS ELECTRICAL DETAIL IS FOR THE SIGNAL DESIGN: 03-1118
DESIGNED: November 2021
SEALED: November 19, 2021
REVISED:

RK&K
P: (919) 878-9560
8601 Six Forks Road Suite 700 | Raleigh, North Carolina 27615-2965
NC License No. F-0112
Engineers | Construction Managers | Planners | Scientists
www.rkk.com
Responsive People | Creative Solutions

ELECTRICAL DETAIL SHEET 7 OF 8

ELECTRICAL AND PROGRAMMING DETAILS FOR:

Prepared for the Offices of:
NC Department of Transportation Mobility and Safety Division Traffic Engineering Branch Signals Management Section
750 N.Greenfield Pkwy,Garner,NC 27529

US 17 (OCEAN HIGHWAY)
AT THOMASBORO ROAD
SB U-TURN

Division 3 | Brunswick County | Calabash

PLAN DATE: November 2021	REVIEWED BY: J O Deaton
PREPARED BY: M W Yalch	REVIEWED BY:

REVISIONS	INIT.	DATE

DOCUMENT NOT CONSIDERED FINAL UNLESS ALL SIGNATURES COMPLETED

SEAL
NORTH CAROLINA PROFESSIONAL SEAL 07438 ENGINEER JAMES O. DEATON

DocuSigned by: JAMES O. Deaton 11/19/2021
4DF8AC439BD4DE...
SIGNATURE DATE

SIG. INVENTORY NO. 03-1118

11/19/2021
R:\Traffic\Signals\Design\Signals\Electrical Details\W-5601GA_SIG_03-1118e.dgn
dsears

PROJECT REFERENCE NO.	SHEET NO.
W-5601GA	Sig. 2.8

ALTERNATE PHASING ACTIVATION DETAIL

TO RUN ALT. PHASING DURING COORDINATION - SELECT ALL PAGE CHANGES (AS SHOWN BELOW) WITHIN COORDINATION PLAN PROGRAMMING.

TO RUN ALT. PHASING DURING FREE RUN - PROGRAM PAGE CHANGES (SHOWN BELOW) IN SEPARATE TIME OF DAY EVENTS. IF PAGE 1 IS USED, NO EVENT PROGRAMMING IS NECESSARY FOR THAT PARTICULAR PAGE.

PHASING	INPUTS PAGE	OVERLAPS PAGE
ACTIVE PAGES REQUIRED TO RUN NORMAL PHASING	1	1
ACTIVE PAGES REQUIRED TO RUN ALTERNATE PHASING	2	2

NOTE: PAGES NOT SHOWN (i.e. sequence, phase control, etc.) SHOULD REMAIN AS '1', OR AS DEFINED BY TIMING ENGINEER.

IMPORTANT: IF ALT. PHASING IS USED DURING FREE RUN AND COORDINATION, DO NOT OPERATE TIME OF DAY PAGE CHANGE EVENTS CONCURRENTLY WITH COORDINATION PLAN EVENTS IN THE EVENT SCHEDULER. (EX. FREE RUN PAGE CHANGE EVENT SHOULD END BEFORE COORDINATION PLAN EVENT STARTS AND VICE-VERSA).

ALTERNATE PHASING PAGE CHANGE SUMMARY

THE FOLLOWING IS A SUMMARY OF WHAT TAKES PLACE WHEN THESE OUTPUT/INPUT PAGE CHANGES ACTIVATE TO CALL THE "ALTERNATE PHASING":

OVERLAPS PAGE 2: Modifies overlap parent phases for heads 71 and 72 to run protected turns only.

INPUTS PAGE 2: Reduces delay time for phase 7 call on loops 7A and 7B to 0 seconds.

OUTPUT ASSIGNMENT PROGRAMMING DETAIL TO REMAP LOADSWITCH S7 TO PHASE 7

(program controller as shown below)

CHANGING OUTPUT ASSIGNMENTS

1. FROM MAIN MENU SELECT '6' (OUTPUTS), THEN '1' (OUTPUT ASSIGNMENTS)
2. ENTER 30 (PHASE 5 RED) FOR OUTPUT ASSIGNMENT #.
3. SCROLL DOWN TO 'VEHICLE PHASE' AND ENTER 'Y' REGARDLESS OF DEFAULT PROGRAMMING
4. ENTER '7' FOR 'SELECT VEHICLE PHASE'. NO CHANGE NEEDED FOR 'SELECT COLOR'
5. BACKUP TO 'OUTPUT ASSIGNMENTS AND SETTINGS MENU:' BY PRESSING THE 'ESC' BUTTON ON KEYBOARD.
6. SELECT '1' (OUTPUT ASSIGNMENTS)
7. ENTER 31 (PHASE 5 YELLOW) FOR OUTPUT ASSIGNMENT #.
8. REPEAT STEPS # 3 AND # 4.
9. ENTER 32 (PHASE 5 GREEN) FOR OUTPUT ASSIGNMENT #.
10. REPEAT STEPS # 3 AND # 4.

PROGRAMMING COMPLETE

THIS ELECTRICAL DETAIL IS FOR THE SIGNAL DESIGN: 03-1118
DESIGNED: November 2021
SEALED: November 19, 2021
REVISED:

RK&K
P: (919) 878-9560
8601 Six Forks Road Suite 700 | Raleigh, North Carolina 27615-2965
NC License No. F-0112
Engineers | Construction Managers | Planners | Scientists
www.rkk.com
Responsive People | Creative Solutions

ELECTRICAL DETAIL SHEET 8 OF 8

DOCUMENT NOT CONSIDERED FINAL UNLESS ALL SIGNATURES COMPLETED

ELECTRICAL AND PROGRAMMING DETAILS FOR:

Prepared for the Offices of:
NC Department of Transportation Mobility and Safety Division Traffic Engineering Branch Signals & Systems Management Section
750 N.Greenfield Pkwy,Garner,NC 27529

US 17 (OCEAN HIGHWAY)
AT THOMASBORO ROAD
SB U-TURN

Division 3 | Brunswick County | Calabash

PLAN DATE: November 2021 | REVIEWED BY: J O Deaton
PREPARED BY: M W Yalch | REVIEWED BY:

REVISIONS	INIT.	DATE

SEAL
NORTH CAROLINA PROFESSIONAL SEAL 07438 ENGINEER JAMES O. DEATON

DocuSigned by: JAMES O. Deaton 11/19/2021
SIGNATURE | DATE

SIG. INVENTORY NO. 03-1118

11/19/2021
R:\Traffic\Signals\Design\Signals\Electrical Details\W-5601GA_SIG_03-1118e.dgn
dsears

METAL POLE No. 1

PROJECT REFERENCE NO.	SHEET NO.
W-5601GA	SIG. 2.9

Design Loading for METAL POLE NO. 1

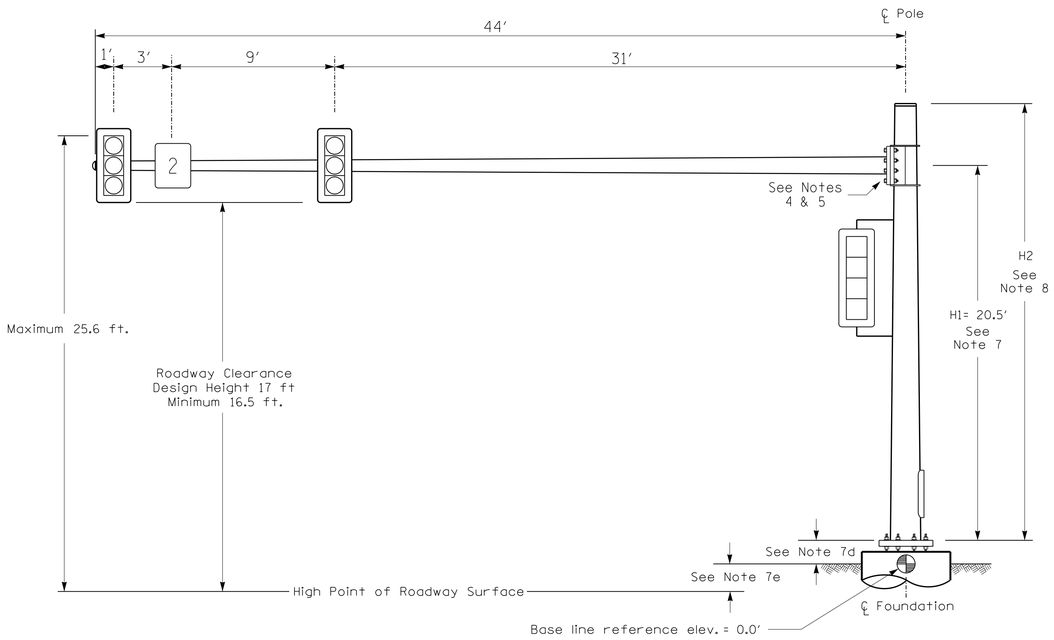

Elevation View

SPECIAL NOTE

The contractor is responsible for verifying that the mast arm attachment height (H1) will provide the "Design Height" clearance from the roadway before submitting final shop drawings for approval. Verify elevation data below which was obtained by field measurement or from available project survey data.

Elevation Data for Mast Arm Attachment (H1)

Elevation Differences for:	Pole 1	
Baseline reference point at ⊕ Foundation @ ground level	0.0 ft.	
Elevation difference at High point of roadway surface	+2.0 ft.	
Elevation difference at Edge of travelway or face of curb	+1.5 ft.	

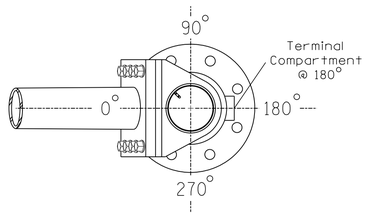

POLE RADIAL ORIENTATION

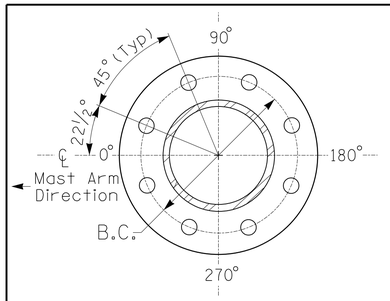

8 BOLT BASE PLATE DETAIL

See Note 6

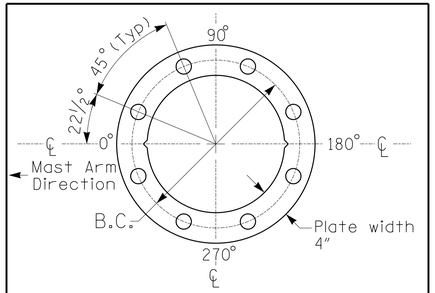

BASE PLATE TEMPLATE & ANCHOR BOLT LOCK PLATE DETAIL
For 8 Bolt Base Plate

MAST ARM LOADING SCHEDULE

LOADING SYMBOL	DESCRIPTION	AREA	SIZE	WEIGHT
	RIGID MOUNTED SIGNAL HEAD 12"-3 SECTION-WITH BACKPLATE	9.3 S.F.	25.5" W X 52.5" L	60 LBS
	RIGID MOUNTED SIGNAL HEAD 12"-4 SECTION-WITH BACKPLATE	11.5 S.F.	25.5" W X 66.0" L	74 LBS
2	SIGN RIGID MOUNTED	9.0 S.F.	36.0" W X 36.0" L	17 LBS

NOTES

DESIGN REFERENCE MATERIAL

1. Design the traffic signal structure and foundation in accordance with:
   - The 6th Edition 2013 AASHTO "Standard Specifications for Structural Supports for Highway Signs, Luminaires, and Traffic Signals, including all of the latest interim revisions.
   - The 2018 NCDOT "Standard Specifications for Roads and Structures." The latest addenda to the specifications can be found in the traffic signal project special provisions.
   - The 2018 NCDOT Roadway Standard Drawings.
   - The traffic signal project plans and special provisions.
   - The NCDOT "Metal Pole Standards" located at the following NCDOT website: https://connect.ncdot.gov/resources/safety/Pages/ITS-Design-Resources.aspx

DESIGN REQUIREMENTS

2. Design the traffic signal structure using the loading conditions shown in the elevation views. These are anticipated worst case "design loads" and may not represent the actual loads that will be applied at the time of the installation. The contractor should refer to the traffic signal plans for the actual loads that will be applied at the time of the installation.
3. Design all signal supports using stress ratios that do not exceed 0.9.
4. The camber design for the mast arm deflection should provide an appearance of a low pitched arch where the tip or the free end of the mast arm does not deflect below horizontal when fully loaded.
5. A clamp-type bolted mast arm-to-pole connection may be used instead of the welded ring stiffened box connection shown as long as the connection meets all of the design requirements.
6. Design base plate with 8 anchor bolt holes. Provide 2 inch x 60 inch anchor bolts.
7. The mast arm attachment height (H1) shown is based on the following design assumptions:
   a. Mast arm slope and deflection are not considered in determining the arm attachment height as they are assumed to offset each other.
   b. Signal heads are rigidly mounted and vertically centered on the mast arm.
   c. The roadway clearance height for design is as shown in the elevation views.
   d. The top of the pole base plate is 0.75 feet above the ground elevation.
   e. Refer to the Elevation Data Chart for the elevation differences between the proposed foundation ground level and the high point of the roadway.
8. The pole manufacturer will determine the total height (H2) of each pole using the greater of the following:
   - Mast arm attachment height (H1) plus 2 feet, or
   - H1 plus 1/2 of the total height of the mast arm attachment assembly plus 1 foot.
9. If pole location adjustments are required, the contractor must gain approval from the Engineer as this may affect the mast arm lengths and arm attachment heights. The contractor may contact the Signal Design Section Senior Structural Engineer for assistance at (919) 814-5000.
10. The contractor is responsible for verifying that the mast arm length shown will allow proper positioning of the signal heads over the roadway.
11. The contractor is responsible for providing soil penetration testing data (SPT) to the pole manufacturer so site specific foundations can be designed.

NCDOT Wind Zone 2 (130 mph)

DOCUMENT NOT CONSIDERED FINAL UNLESS ALL SIGNATURES COMPLETED

RK&K
P: (919) 878-9560
8601 Six Forks Road Suite 700 | Raleigh, North Carolina 27615-2965
NC License No. F-0112
Engineers | Construction Managers | Planners | Scientists
www.rkk.com
Responsive People | Creative Solutions

Prepared for the Offices of:
Transportation Mobility and Safety Division
NORTH CAROLINA DEPARTMENT OF TRANSPORTATION
Signal Design Section
750 N.Greenfield Pkwy.Garner,NC 27529

US 17 (OCEAN HIGHWAY)
AT THOMASBORO ROAD
SB U-TURN

DIVISION 3 BRUNSWICK COUNTY CALABASH

PLAN DATE:	NOVEMBER 2021	REVIEWED BY:	C.B.HOLDEN
PREPARED BY:	D.T.SEARS	REVIEWED BY:	

SCALE 0 N/A N/A

REVISIONS	INIT.	DATE

SEAL
NORTH CAROLINA PROFESSIONAL SEAL 044558 ENGINEER DAVID T. SEARS

DocuSigned by: David T Sears 060183F28E67415... 11/19/2021
SIGNATURE DATE

SIG. INVENTORY NO. 03-1118

11/19/2021
By:dsears
P:\Traffic\Signals\Design\Mastarm Loading Diagrams\W5601GA_03-1118mp.dgn
dsears

PROJECT REFERENCE NO.	SHEET NO.
W-5601GA	SIG. 3.0

DEFAULT PHASING DIAGRAM

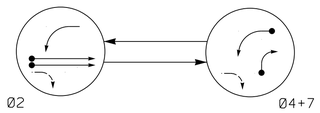

ALTERNATE PHASING DIAGRAM

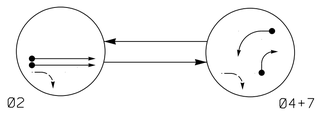

DEFAULT PHASING TABLE OF OPERATION

SIGNAL FACE	PHASE Ø2	PHASE Ø4+7	PHASE FLASH
21,22	G	R	Y
41,42,43	R	→	R
71,72	~~G~~ Y	←	~~Y~~

ALTERNATE PHASING TABLE OF OPERATION

SIGNAL FACE	PHASE Ø2	PHASE Ø4+7	PHASE FLASH
21,22	G	R	Y
41,42,43	R	→	R
71,72	~~R~~	←	~~Y~~

OASIS 2070 LOOP & DETECTOR INSTALLATION CHART

INDUCTIVE LOOPS					DETECTOR PROGRAMMING						
LOOP	SIZE (FT)	DISTANCE FROM STOPBAR (FT)	TURNS	NEW LOOP	PHASE	CALLING	EXTENSION	FULL TIME DELAY	STRETCH TIME	DELAY TIME	SYSTEM LOOP	NEW CARD
2A	6x6	420	5	Y	2	Y	Y	-	-	-	-	Y
2B	6x6	420	5	Y	2	Y	Y	-	-	-	-	Y
4A	6x40	0	2-4-2	Y	4	Y	Y	-	-	15	-	Y
7A	6x40	0	2-4-2	Y	7	Y	Y	-	-	✳15	-	Y

✳Disable Delay During Alternate Phasing Operation.

2 PHASE
FULLY ACTUATED
D03-06_CALABASH SIGNAL SYSTEM

NOTES

1. REFER TO "ROADWAY STANDARD DRAWINGS NCDOT" DATED JANUARY 2018 AND "STANDARD SPECIFICATIONS FOR ROADS AND STRUCTURES" DATED JANUARY 2018.
2. DO NOT PROGRAM SIGNAL FOR LATE NIGHT FLASHING OPERATION UNLESS OTHERWISE DIRECTED BY THE ENGINEER.
3. SET ALL DETECTOR UNITS TO PRESENCE MODE.
4. REFER TO PAVEMENT MARKING PLANS FOR STOP BAR LOCATIONS.
5. INSTALL PULL BOXES AT INTERVALS OF NO GREATER THAN 150 FT ALONG ALL RUNS OF LEAD-IN WIRE.
6. MAXIMUM TIMES SHOWN IN TIMING CHART ARE FOR FREE-RUN OPERATION ONLY. COORDINATED SIGNAL SYSTEM TIMING VALUES SUPERSEDE THESE VALUES.
7. CLOSED LOOP SYSTEM DATA: CONTROLLER ASSET #0416.

PHASING DIAGRAM DETECTION LEGEND

- DETECTED MOVEMENT
- UNDETECTED MOVEMENT (OVERLAP)
- UNSIGNALIZED MOVEMENT
- PEDESTRIAN MOVEMENT

SIGNAL FACE I.D.

All Heads L.E.D.

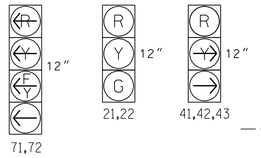

LEGEND

PROPOSED		EXISTING
	Traffic Signal Head	
	Modified Signal Head	N/A
	Sign	
	Pedestrian Signal Head With Push Button & Sign	
	Signal Pole with Guy	
	Signal Pole with Sidewalk Guy	
	Inductive Loop Detector	
	Controller & Cabinet	
	Junction Box	
	2-in Underground Conduit	
N/A	Right of Way	
	Directional Arrow	
	Metal Pole with Mastarm	
	Type III Signal Pedestal	
(A)	No U-Turn Sign (R3-4)	(A)
(B)	"YIELD" Sign (R1-2)	(B)

OASIS 2070 TIMING CHART

FEATURE	PHASE 2	PHASE 4	PHASE 7
Min Green 1 *	14	7	7
Extension 1 *	6.0	2.0	2.0
Max Green 1 *	90	30	30
Yellow Clearance	5.2	5.2	3.0
Red Clearance	1.2	1.2	3.3
Walk 1 *	-	-	-
Don't Walk 1	-	-	-
Seconds Per Actuation *	1.5	-	-
Max Variable Initial *	46	-	-
Time Before Reduction *	15	-	-
Time To Reduce *	30	-	-
Minimum Gap	3.4	-	-
Recall Mode	MIN RECALL	-	-
Vehicle Call Memory	YELLOW	-	-
Dual Entry	-	X	X
Simultaneous Gap	ON	ON	ON

* These values may be field adjusted. Do not adjust Min Green and Extension times for phase 2 lower than what is shown. Min Green for all other phases should not be lower than 4 seconds.

SIGNAL UPGRADE - FINAL DESIGN

DOCUMENT NOT CONSIDERED FINAL UNLESS ALL SIGNATURES COMPLETED

RK&K
P: (919) 878-9560
8601 Six Forks Road Suite 700 | Raleigh, North Carolina 27615-2965
NC License No. F-0112
Engineers | Construction Managers | Planners | Scientists
www.rkk.com
Responsive People | Creative Solutions

Prepared for the Offices of:
Transportation Mobility and Safety Division
NORTH CAROLINA DEPARTMENT OF TRANSPORTATION
Signal Design Section
750 N.Greenfield Pkwy,Garner,NC 27529

SCALE 0 40 1"=40'

US 17 (OCEAN HIGHWAY)
AT
SR 1165 (THOMASBORO ROAD)

DIVISION 3 BRUNSWICK COUNTY CALABASH

PLAN DATE: NOVEMBER 2021 REVIEWED BY: DT SEARS

PREPARED BY: WP ERICKSON-JONES REVIEWED BY:

REVISIONS	INIT.	DATE

SEAL
NORTH CAROLINA
PROFESSIONAL
SEAL
044558
ENGINEER
DAVID T. SEARS

DocuSigned by: David T Sears 11/19/2021
080183F2E87415...
SIGNATURE DATE

SIG. INVENTORY NO. 03-0416

11/19/2021
R:\Traffic\Signals\Design\Signals\W-5601GA_SIG_03-0416.dgn
dsears

PROJECT REFERENCE NO.	SHEET NO.
W-5601GA	Sig. 3.1

EDI MODEL 2018ECL-NC CONFLICT MONITOR PROGRAMMING DETAIL

(remove jumpers and set switches as shown)

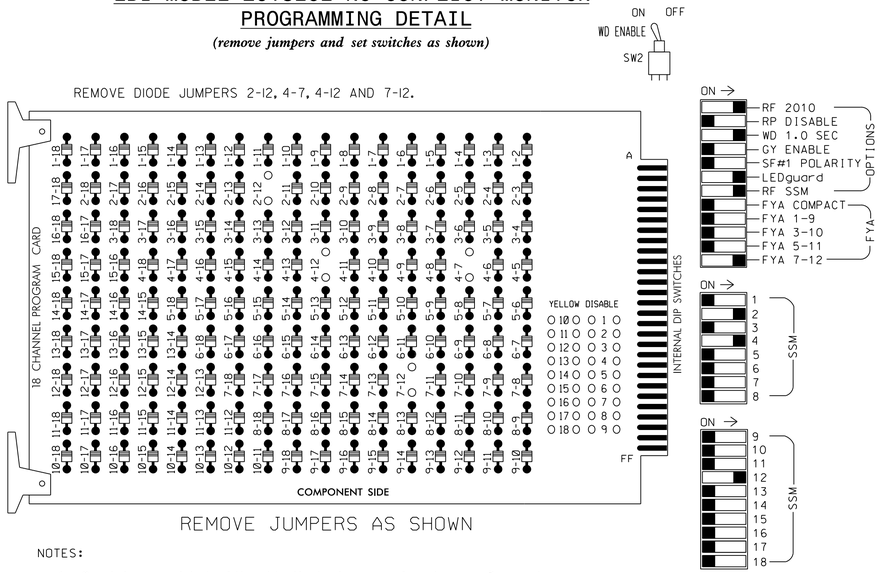

REMOVE JUMPERS AS SHOWN

■ = DENOTES POSITION OF SWITCH

NOTES:

1. Card is provided with all diode jumpers in place. Removal of any jumper allows its channels to run concurrently.
2. Ensure jumpers SEL2-SEL5 and SEL9 are present on the monitor board.
3. Ensure that Red Enable is active at all times during normal operation.
4. Connect serial cable from conflict monitor to comm. port 1 of 2070 controller. Ensure conflict monitor communicates with 2070.

NOTES

1. To prevent "flash-conflict" problems, insert red flash program blocks for all unused vehicle load switches in the output file. The installer shall verify that signal heads flash in accordance with the Signal Plans.
2. Program phases 4 and 7 for Dual Entry.
3. Enable Simultaneous Gap-Out for all Phases.
4. Program phase 2 for Variable Initial and Gap Reduction.
5. Program phase 2 for Startup In Green.
6. Program phase 2 for Yellow Flash.
7. If this signal will be managed by an ATMS software, enable controller and detector logging for all detectors used at this location.
8. The cabinet and controller are part of the D03-06 Calabash Signal System.

EQUIPMENT INFORMATION

CONTROLLER.....2070
CABINET.....332 w/ AUX
SOFTWARE.....ECONOLITE OASIS
CABINET MOUNT.....BASE
OUTPUT FILE POSITIONS...18 WITH AUX. OUTPUT FILE
LOAD SWITCHES USED.....S2,S5,S10,AUX S5
PHASES USED.....2,4,7
OVERLAP "A".....NOT USED
OVERLAP "B".....NOT USED
OVERLAP "C".....NOT USED
OVERLAP "D".....2+7

SIGNAL HEAD HOOK-UP CHART

LOAD SWITCH NO.	S1	S2	S3	S4	S5	S6	S7	S8	S9	S10	S11	S12	AUX S1	AUX S2	AUX S3	AUX S4	AUX S5	AUX S6
CMU CHANNEL NO.	1	2	13	3	4	14	5	6	15	7	8	16	9	10	17	11	12	18
PHASE	1	2	2 PED	3	4	4 PED	5	6	6 PED	7	8	8 PED	OLA	OLB	SPARE	OLC	OLD	SPARE
SIGNAL HEAD NO.	NU	21,22	NU	NU	41,42, 43	NU	NU	NU	NU	71,72 ★	NU	NU	NU	NU	NU	NU	71,72 ★	NU
RED		128			101													
YELLOW		129								✳								
GREEN		130																
RED ARROW																	A101	
YELLOW ARROW					102												A102	
FLASHING YELLOW ARROW																	A103	
GREEN ARROW					103					124								

NU = Not Used

✳ Denotes install load resistor. See load resistor installation detail this sheet.

★ See pictorial of head wiring in detail this sheet.

FYA SIGNAL WIRING DETAIL

(wire signal heads as shown)

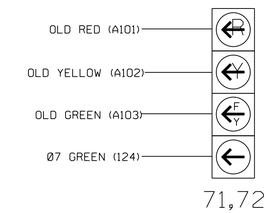

NOTE

The sequence display for this signal requires special logic programming. See sheet 2 for programming instructions.

INPUT FILE POSITION LAYOUT

(front view)

		1	2	3	4	5	6	7	8	9	10	11	12	13	14
FILE "I"	U	SLOT EMPTY	Ø2 2A	SLOT EMPTY	SLOT EMPTY	SLOT EMPTY	Ø4 4A	SLOT EMPTY	SLOT EMPTY	SLOT EMPTY	SLOT EMPTY	SLOT EMPTY	SLOT EMPTY	SLOT EMPTY	FS DC ISOLATOR
	L		Ø2 2B				NOT USED								ST DC ISOLATOR
FILE "J"	U	SLOT EMPTY	SLOT EMPTY	SLOT EMPTY	SLOT EMPTY	Ø7 7A	SLOT EMPTY	SLOT EMPTY	SLOT EMPTY	SLOT EMPTY	SLOT EMPTY	SLOT EMPTY	SLOT EMPTY	SLOT EMPTY	SLOT EMPTY
	L					NOT USED									

EX.: 1A, 2A, ETC. = LOOP NO.'S

FS = FLASH SENSE
ST = STOP TIME

INPUT FILE CONNECTION & PROGRAMMING CHART

LOOP NO.	LOOP TERMINAL	INPUT FILE POS.	PIN NO.	INPUT ASSIGNMENT NO.	DETECTOR NO.	NEMA PHASE	CALL	EXTEND	FULL TIME DELAY	STRETCH TIME	DELAY TIME
2A	TB2-5,6	I2U	39	1	2	2	Y	Y			
2B	TB2-7,8	I2L	43	5	12	2	Y	Y			
4A	TB4-9,10	I6U	41	3	4	4	Y	Y			15
7A	TB5-5,6	J5U	57	19	7	7	Y	Y			15
	-	J5U	57	19 ★	57	7	Y	Y			

★ See Input Assignment Programming Detail for Alternate Phasing on sheet 3.

INPUT FILE POSITION LEGEND: J2L
FILE J
SLOT 2
LOWER

LOAD RESISTOR INSTALLATION DETAIL

(install resistors as shown below)

ACCEPTABLE VALUES	
VALUE (ohms)	WATTAGE
1.5K - 1.9K	25W (min)
2.0K - 3.0K	10W (min)

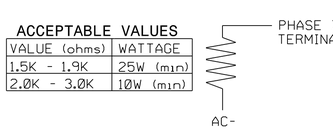

THIS ELECTRICAL DETAIL IS FOR THE SIGNAL DESIGN: 03-0416
DESIGNED: November 2021
SEALED: November 19, 2021
REVISED:

ELECTRICAL DETAIL SHEET 1 OF 4

DOCUMENT NOT CONSIDERED FINAL UNLESS ALL SIGNATURES COMPLETED

ELECTRICAL AND PROGRAMMING DETAILS FOR:

US 17 (OCEAN HIGHWAY)
AT
SR 1165 (THOMASBORO ROAD)

Division 3 | Brunswick County | Calabash

PLAN DATE: November 2021 | REVIEWED BY: J O Deaton
PREPARED BY: M W Yalch | REVIEWED BY:

REVISIONS	INIT.	DATE

SEAL
NORTH CAROLINA PROFESSIONAL SEAL 07438 ENGINEER JAMES O. DEATON

DocuSigned by: JAMES O. Deaton 11/19/2021
SIGNATURE | DATE

SIG. INVENTORY NO. 03-0416

Prepared for the Offices of:
NC Department of Transportation Mobility and Safety Division Traffic Engineering Branch Signals Management Section
750 N.Greenfield Pkwy,Garner,NC 27529

RK&K
P: (919) 878-9560
8601 Six Forks Road Suite 700 | Raleigh, North Carolina 27615-2965
NC License No. F-0112
Engineers | Construction Managers | Planners | Scientists
www.rkk.com
Responsive People | Creative Solutions

11/19/2021
R:\Traffic\Signals\Design\Signals\Electrical Details\W-5601GA_SIG_03-0416a.dgn
dsears

PROJECT REFERENCE NO.	SHEET NO.
W-5601GA	Sig. 3.2

LOGICAL I/O PROCESSOR PROGRAMMING DETAIL
TO PRODUCE SPECIAL FYA-PPLT SIGNAL SEQUENCE

(program controller as shown below)

1. FROM MAIN MENU PRESS '2' (PHASE CONTROL), THEN '1' (PHASE CONTROL FUNCTIONS). SCROLL TO THE BOTTOM OF THE MENU AND ENABLE ACT LOGIC COMMANDS 1, 2 AND 3.

2. FROM MAIN MENU PRESS '6' (OUTPUTS), THEN '3' (LOGICAL I/O PROCESSOR).

```
  LOGICAL I/O COMMAND #1  (+/-COMMAND#)
IF  ACTIVE PHASE       #7  IS ON
AND RED CLEAR ON PHASE #7  IS ON

            SCROLL DOWN

THEN:
SET OUTPUT  ASSIGNMENT #39 ON
SET OUTPUT  ASSIGNMENT #40 OFF
```

NOTE: LOGIC FOR PHASE 7 RED CLEAR WHEN TRANSITIONING FROM PHASE 7 TO PHASE 2 (HEADS 71,72).

PRESS '+'

```
  LOGICAL I/O COMMAND #2  (+/-COMMAND#)
IF  ACTIVE PHASE       #7  IS ON

            SCROLL DOWN

THEN:
SET OUTPUT  ASSIGNMENT #41 OFF
```

NOTE: LOGIC FOR SWITCHING FLASHING YELLOW ARROW "OFF" DURING PHASE 7 (HEADS 71,72).

PRESS '+'

```
  LOGICAL I/O COMMAND #3  (+/-COMMAND#)
IF  YELLOW ON PHASE    #7  IS ON

            SCROLL DOWN

THEN:
SET OUTPUT  ASSIGNMENT #40 ON
```

NOTE: LOGIC FOR YELLOW ARROW CLEARANCE FROM PHASE 7 (HEADS 71,72).

LOGIC I/O PROCESSOR PROGRAMMING COMPLETE

OUTPUT REFERENCE SCHEDULE

OUTPUT 39 = Overlap D Red
OUTPUT 40 = Overlap D Yellow
OUTPUT 41 = Overlap D Green

OVERLAP PROGRAMMING DETAIL

(program controller as shown below)

FROM MAIN MENU PRESS '8' (OVERLAPS), THEN '1' (VEHICLE OVERLAP SETTINGS).

PRESS '+' 3x

```
 PAGE 1: VEHICLE OVERLAP 'D' SETTINGS
 PHASE:          |1234567891011121314151 6
VEH OVL PARENTS: | X    X
VEH OVL NOT VEH: |
VEH OVL NOT PED: |
VEH OVL GRN EXT: |
STARTUP COLOR: _ RED  _ YELLOW  _ GREEN
FLASH COLORS:  _ RED  _ YELLOW  X GREEN
SELECT VEHICLE OVERLAP OPTIONS:   (Y/N)
FLASH YELLOW IN CONTROLLER FLASH?...N
GREEN EXTENSION (0-255 SEC).........0
YELLOW CLEAR (0=PARENT,3-25.5 SEC)..0.0
RED CLEAR (0=PARENT,0.1-25.5 SEC)...0.0
OUTPUT AS PHASE # (0=NONE, 1-16)....0
```

← NOTICE GREEN FLASH

OVERLAP PROGRAMMING COMPLETE

OVERLAP PROGRAMMING DETAIL FOR ALTERNATE PHASING

(program controller as shown below)

FROM MAIN MENU PRESS '8' (OVERLAPS), THEN '1' (VEHICLE OVERLAP SETTINGS). PRESS 'NEXT' TO ADVANCE TO PAGE 2.

PRESS '+' 3x

NOTICE PAGE 2 →

```
 PAGE 2: VEHICLE OVERLAP 'D' SETTINGS
 PHASE:          |1234567891011121314151 6
VEH OVL PARENTS: |      X
VEH OVL NOT VEH: |
VEH OVL NOT PED: |
VEH OVL GRN EXT: |
STARTUP COLOR: _ RED  _ YELLOW  _ GREEN
FLASH COLORS:  _ RED  _ YELLOW  _ GREEN
SELECT VEHICLE OVERLAP OPTIONS:   (Y/N)
FLASH YELLOW IN CONTROLLER FLASH?...N
GREEN EXTENSION (0-255 SEC).........0
YELLOW CLEAR (0=PARENT,3-25.5 SEC)..0.0
RED CLEAR (0=PARENT,0.1-25.5 SEC)...0.0
OUTPUT AS PHASE # (0=NONE, 1-16)....0
```

←

OVERLAP PROGRAMMING COMPLETE

THIS ELECTRICAL DETAIL IS FOR THE SIGNAL DESIGN: 03-0416
DESIGNED: November 2021
SEALED: November 19, 2021
REVISED:

RK&K
P: (919) 878-9560
8601 Six Forks Road Suite 700 | Raleigh, North Carolina 27615-2965
NC License No. F-0112
Engineers | Construction Managers | Planners | Scientists
www.rkk.com
Responsive People | Creative Solutions

ELECTRICAL DETAIL SHEET 2 OF 4

ELECTRICAL AND PROGRAMMING DETAILS FOR:

Prepared for the Offices of:
NC Department of Transportation Mobility and Safety Division, Traffic Engineering Branch, Signals Management Section
750 N.Greenfield Pkwy,Garner,NC 27529

US 17 (OCEAN HIGHWAY)
AT
SR 1165 (THOMASBORO ROAD)

Division 3 | Brunswick County | Calabash

PLAN DATE: November 2021 | REVIEWED BY: J O Deaton
PREPARED BY: M W Yalch | REVIEWED BY:

REVISIONS	INIT.	DATE

DOCUMENT NOT CONSIDERED FINAL UNLESS ALL SIGNATURES COMPLETED

SEAL
NORTH CAROLINA PROFESSIONAL ENGINEER SEAL 07438 JAMES O. DEATON

DocuSigned by: James O. Deaton 11/19/2021
SIGNATURE DATE

SIG. INVENTORY NO. 03-0416

11/19/2021
R:\Traffic\Signals\Design\Signals\Electrical Details\W-5601GA_SIG_03-0416e.dgn
dsears

PROJECT REFERENCE NO.	SHEET NO.
W-5601GA	Sig. 3.3

INPUT PAGE 2 ASSIGNMENT PROGRAMMING DETAIL FOR ALTERNATE PHASING - LOOP 7A

(program controller as shown below)

NOTES: 1. THIS PROGRAMMING APPLIES FOR INPUT PAGE 2 ONLY. INPUT PAGE 1 WILL USE STANDARD DEFAULT SETTINGS. THIS PROGRAMMING IS NECESSARY FOR PROPER DETECTOR OPERATION DURING ALTERNATE PHASING OPERATION.

2. THE PROGRAMMING BELOW REASSIGNS DETECTOR 57 TO INPUT #19 SO THAT THE DELAY ON LOOP 7A CAN BE REDUCED FROM 15 SECONDS TO 0 SECONDS.

FROM MAIN MENU PRESS '5' (INPUTS), THEN PRESS 'NEXT' TO GET TO INPUT PAGE '2'. PRESS THE '+' KEY UNTIL INPUT 19 IS REACHED.

```
PAGE: 2 C1 PIN:57  VEHICLE DETECTOR
INPUT ASSIGNMENT #.................19
DEBOUNCE TIME (0-25.5 SEC).........0.5
DELAY TIME (0-25.5 SEC).............0.0
HOLD-OVER TIME (0-25.5 SEC).........0.0
ASSIGNMENT SELECTION:
NOT ENABLED (Y/N)..................._
VEHICLE DETECTOR (1-64).............7
PEDESTRIAN DETECTOR (1-16).........._
ALTERNATE PED DETECTOR (1-16)......._
PREEMPT (1-10)......................._
INVERTED PREEMPT (1-10)............._
STOP TIME (Y/N).....................N
FLASH SENSE (Y/N)...................N
DOOR OPEN (Y/N).....................N
MANUAL CONTROL ENABLE (Y/N).........N
MANUAL CONTROL ADVANCE (Y/N)........N
SPECIAL FUNCTION ALARM (1-8)........0
TOD HOUR SYCHRONIZATION (0-23)......0
FORCE OFF RING (1-4)................0
HOLD PHASES (1-16)..................0
PLAN (65=FLSH,66=FREE)...  OFFSET#..0
CHANGE PHASE SEQUENCE PAGE (1-12)...1
CHANGE PHASE TIMING PAGE (1-4)......1
CHANGE PHASE CONTROL PAGE (1-4).....1
CHANGE OVERLAP CONTROL PAGE (1-4)...1
CHANGE INPUT PAGE (1-4).............1
CHANGE OUTPUT PAGE (1-4)............1
OVERRIDE PHASE CONTROL FUNCTION (Y)._
```

ENTER '57' TO REASSIGN THE VEHICLE DETECTOR FOR THIS INPUT

(LOOP 7A - PHASE 7)

```
PAGE: 2 C1 PIN:57  VEHICLE DETECTOR
INPUT ASSIGNMENT #.................19
DEBOUNCE TIME (0-25.5 SEC).........0.5
DELAY TIME (0-25.5 SEC).............0.0
HOLD-OVER TIME (0-25.5 SEC).........0.0
ASSIGNMENT SELECTION:
NOT ENABLED (Y/N)..................._
VEHICLE DETECTOR (1-64).............57
PEDESTRIAN DETECTOR (1-16).........._
ALTERNATE PED DETECTOR (1-16)......._
PREEMPT (1-10)......................._
INVERTED PREEMPT (1-10)............._
STOP TIME (Y/N).....................N
FLASH SENSE (Y/N)...................N
DOOR OPEN (Y/N).....................N
MANUAL CONTROL ENABLE (Y/N).........N
MANUAL CONTROL ADVANCE (Y/N)........N
SPECIAL FUNCTION ALARM (1-8)........0
TOD HOUR SYCHRONIZATION (0-23)......0
FORCE OFF RING (1-4)................0
HOLD PHASES (1-16)..................0
PLAN (65=FLSH,66=FREE)...  OFFSET#..0
CHANGE PHASE SEQUENCE PAGE (1-12)...1
CHANGE PHASE TIMING PAGE (1-4)......1
CHANGE PHASE CONTROL PAGE (1-4).....1
CHANGE OVERLAP CONTROL PAGE (1-4)...1
CHANGE INPUT PAGE (1-4).............1
CHANGE OUTPUT PAGE (1-4)............1
OVERRIDE PHASE CONTROL FUNCTION (Y)._
```

PROGRAMMING COMPLETE

FROM MAIN MENU PRESS '7' (DETECTORS), THEN PRESS '1' FOR VEHICLE DETECTORS. PRESS THE '-' KEY TO GET TO VEHICLE DETECTOR #57.

```
VEHICLE DETECTOR #57  SETTINGS (+-,1-64)
SETTING:                           (Y/N)
ENABLE DETECTOR.....................N
ENABLE LOGGING......................N
ENABLE DIAGNOSTICS..................N
SPEED TRAP..........................N
CALL DETECTOR.......................Y
EXTENSION DETECTOR..................Y
MODE 2 STOP BAR.....................N
SWITCHING DETECTOR..................N
DUPLICATING DETECTOR................N
ENABLE FULL TIME DELAY..............N
IF FAILED, SET MIN RECALL?..........N
IF FAILED, SET MAX1 RECALL?.........N
IF FAILED, SET MAX2 RECALL?.........N
PHASE#          ¦1234567891011213141516
PHASES ASSIGNED ¦
SWITCH/DUPLICATE¦
LOOP SIZE (0-255 FT).................6
SPEED TRAP DISTANCE (0-255 FT)......0
STOP BAR TIME (0-255 SEC)...........0
STRETCH (0-25.5 SEC)................0.0
DELAY (0-255 SEC)...................0
MAX CALLS/MIN (0-255)...............255
MIN CALLS/DIAGNOSTIC PERIOD (0-255).0
MAX OCCUPANCY (0-100%)..............100
EXTENSION DISABLE TIME (0-255 SEC)..0
QUEUE MAX OCCUPANCY TIME (0-255)....0
QUEUE GAP RESET TIME (0-25.5).......0.0
PREEMPTION INDEX FOR QUEUE (0-10)...0
```

ENTER 'Y' FOR ENABLE DETECTOR

ENTER '7' FOR PHASES ASSIGNED

ENSURE DELAY IS '0'

```
VEHICLE DETECTOR #57  SETTINGS (+-,1-64)
SETTING:                           (Y/N)
ENABLE DETECTOR.....................Y
ENABLE LOGGING......................N
ENABLE DIAGNOSTICS..................N
SPEED TRAP..........................N
CALL DETECTOR.......................Y
EXTENSION DETECTOR..................Y
MODE 2 STOP BAR.....................N
SWITCHING DETECTOR..................N
DUPLICATING DETECTOR................N
ENABLE FULL TIME DELAY..............N
IF FAILED, SET MIN RECALL?..........N
IF FAILED, SET MAX1 RECALL?.........N
IF FAILED, SET MAX2 RECALL?.........N
PHASE#          ¦1234567891011213141516
PHASES ASSIGNED ¦      X
SWITCH/DUPLICATE¦
LOOP SIZE (0-255 FT).................6
SPEED TRAP DISTANCE (0-255 FT)......0
STOP BAR TIME (0-255 SEC)...........0
STRETCH (0-25.5 SEC)................0.0
DELAY (0-255 SEC)...................0
MAX CALLS/MIN (0-255)...............255
MIN CALLS/DIAGNOSTIC PERIOD (0-255).0
MAX OCCUPANCY (0-100%)..............100
EXTENSION DISABLE TIME (0-255 SEC)..0
QUEUE MAX OCCUPANCY TIME (0-255)....0
QUEUE GAP RESET TIME (0-25.5).......0.0
PREEMPTION INDEX FOR QUEUE (0-10)...0
```

DETECTOR PROGRAMMING COMPLETE

NOTE: DETECTOR IS PROGRAMMED PER THE INPUT FILE CONNECTION AND PROGRAMMING CHART SHOWN ON SHEET 1.

THIS ELECTRICAL DETAIL IS FOR THE SIGNAL DESIGN: 03-0416
DESIGNED: November 2021
SEALED: November 19, 2021
REVISED:

ELECTRICAL DETAIL SHEET 3 OF 4

DOCUMENT NOT CONSIDERED FINAL UNLESS ALL SIGNATURES COMPLETED

RK&K
P: (919) 878-9560
8601 Six Forks Road Suite 700 | Raleigh, North Carolina 27615-2965
NC License No. F-0112
Engineers | Construction Managers | Planners | Scientists
www.rkk.com
Responsive People | Creative Solutions

ELECTRICAL AND PROGRAMMING DETAILS FOR:

Prepared for the Offices of:
NC Department of Transportation Mobility and Safety Division Traffic Engineering & Signals Management Section
750 N.Greenfield Pkwy,Garner,NC 27529

US 17 (OCEAN HIGHWAY)
AT
SR 1165 (THOMASBORO ROAD)

Division 3 | Brunswick County | Calabash

PLAN DATE: November 2021 | REVIEWED BY: J O Deaton
PREPARED BY: M W Yalch | REVIEWED BY:

REVISIONS	INIT.	DATE

SEAL
NORTH CAROLINA PROFESSIONAL SEAL 07438 ENGINEER JAMES O. DEATON

DocuSigned by: JAMES O. Deaton 11/19/2021
SIGNATURE | DATE

SIG. INVENTORY NO. 03-0416

11/19/2021
R:\Traffic\Signals\Design\Signals\Electrical Details\W-5601GA_SIG_03-0416e.dgn
dsogers

PROJECT REFERENCE NO.	SHEET NO.
W-5601GA	Sig. 3.4

ALTERNATE PHASING ACTIVATION DETAIL

TO RUN ALT. PHASING DURING COORDINATION - SELECT ALL PAGE CHANGES (AS SHOWN BELOW) WITHIN COORDINATION PLAN PROGRAMMING.

TO RUN ALT. PHASING DURING FREE RUN - PROGRAM PAGE CHANGES (SHOWN BELOW) IN SEPARATE TIME OF DAY EVENTS. IF PAGE 1 IS USED, NO EVENT PROGRAMMING IS NECESSARY FOR THAT PARTICULAR PAGE.

PHASING	INPUTS PAGE	OVERLAPS PAGE
ACTIVE PAGES REQUIRED TO RUN NORMAL PHASING	1	1
ACTIVE PAGES REQUIRED TO RUN ALTERNATE PHASING	2	2

NOTE: PAGES NOT SHOWN (i.e. sequence, phase control, etc.) SHOULD REMAIN AS '1', OR AS DEFINED BY TIMING ENGINEER.

IMPORTANT: IF ALT. PHASING IS USED DURING FREE RUN AND COORDINATION, DO NOT OPERATE TIME OF DAY PAGE CHANGE EVENTS CONCURRENTLY WITH COORDINATION PLAN EVENTS IN THE EVENT SCHEDULER. (EX. FREE RUN PAGE CHANGE EVENT SHOULD END BEFORE COORDINATION PLAN EVENT STARTS AND VICE-VERSA).

ALTERNATE PHASING PAGE CHANGE SUMMARY

THE FOLLOWING IS A SUMMARY OF WHAT TAKES PLACE WHEN THESE OUTPUT/INPUT PAGE CHANGES ACTIVATE TO CALL THE "ALTERNATE PHASING":

OVERLAPS PAGE 2: Modifies overlap parent phases for heads 71 and 72 to run protected turns only.

INPUTS PAGE 2: Reduces delay time for phase 7 call on loop 7A to 0 seconds.

THIS ELECTRICAL DETAIL IS FOR
THE SIGNAL DESIGN: 03-0416
DESIGNED: November 2021
SEALED: November 19, 2021
REVISED:

ELECTRICAL DETAIL SHEET 4 OF 4

DOCUMENT NOT CONSIDERED FINAL UNLESS ALL SIGNATURES COMPLETED

RK&K
P: (919) 878-9560
8601 Six Forks Road Suite 700 | Raleigh, North Carolina 27615-2965
NC License No. F-0112
Engineers | Construction Managers | Planners | Scientists
www.rkk.com
Responsive People | Creative Solutions

ELECTRICAL AND PROGRAMMING DETAILS FOR:

Prepared for the Offices of:
NCDOT Transportation Mobility and Safety Division
Traffic Engineering Branch
Signal Management Section
750 N.Greenfield Pkwy,Garner,NC 27529

US 17 (OCEAN HIGHWAY)
AT
SR 1165 (THOMASBORO ROAD)

Division 3 | Brunswick County | Calabash

PLAN DATE: November 2021 | REVIEWED BY: J O Deaton
PREPARED BY: M W Yalch | REVIEWED BY:

REVISIONS	INIT.	DATE

SEAL
NORTH CAROLINA PROFESSIONAL SEAL 07438 ENGINEER JAMES O. DEATON

DocuSigned by: JAMES O. Deaton 11/19/2021
SIGNATURE DATE

SIG. INVENTORY NO. 03-0416

11/19/2021
R:\Traffic\Signals\Design\Signals\Electrical Details\W-5601GA_SIG_03-0416e.dgn
dsogers

Design Loading for METAL POLE NO. 2

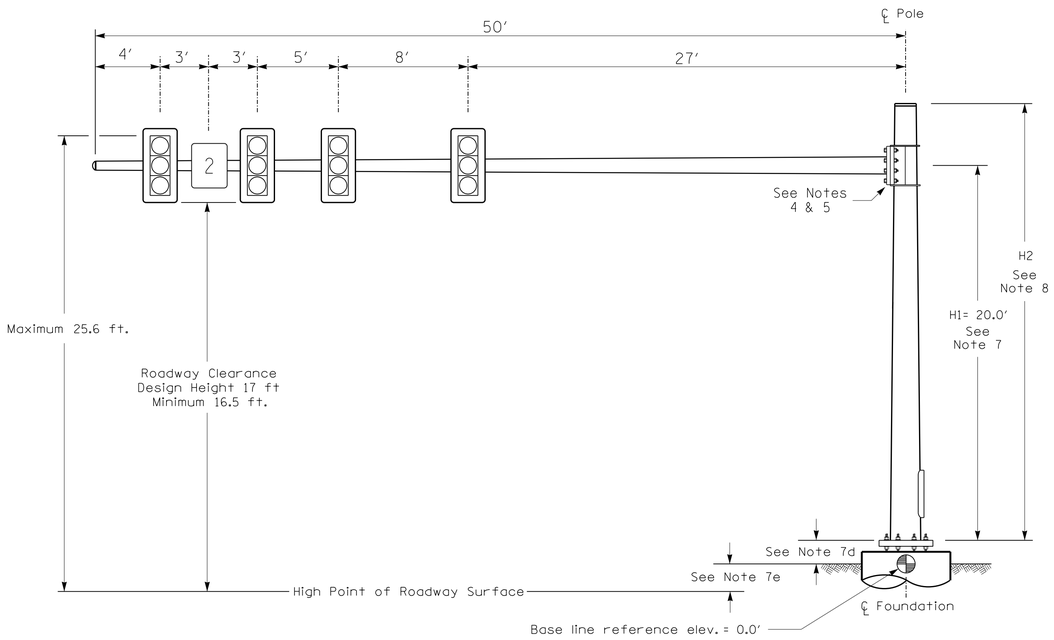

Elevation View

SPECIAL NOTE

The contractor is responsible for verifying that the mast arm attachment height (H1) will provide the "Design Height" clearance from the roadway before submitting final shop drawings for approval. Verify elevation data below which was obtained by field measurement or from available project survey data.

Elevation Data for Mast Arm Attachment (H1)

Elevation Differences for:	Pole 2	
Baseline reference point at ℄ Foundation @ ground level	0.0 ft.	
Elevation difference at High point of roadway surface	+1.5 ft.	
Elevation difference at Edge of travelway or face of curb	+1.0 ft.	

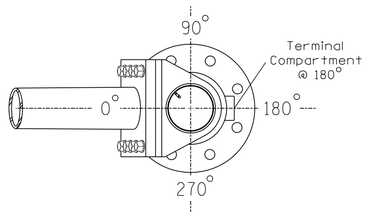

POLE RADIAL ORIENTATION

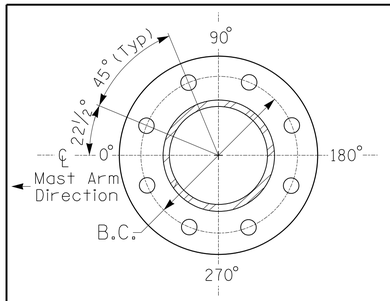

8 BOLT BASE PLATE DETAIL

See Note 6

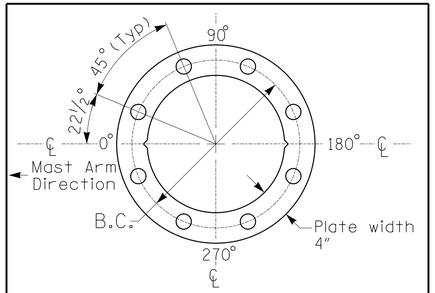

BASE PLATE TEMPLATE & ANCHOR BOLT LOCK PLATE DETAIL
For 8 Bolt Base Plate

METAL POLE No. 2

PROJECT REFERENCE NO.	SHEET NO.
W-5601GA	SIG. 3.5

MAST ARM LOADING SCHEDULE

LOADING SYMBOL	DESCRIPTION	AREA	SIZE	WEIGHT
	RIGID MOUNTED SIGNAL HEAD 12"-3 SECTION-WITH BACKPLATE	9.3 S.F.	25.5"W X 52.5"L	60 LBS
2	SIGN RIGID MOUNTED	9.0 S.F.	36.0"W X 36.0"L	17 LBS

NOTES

DESIGN REFERENCE MATERIAL

1. Design the traffic signal structure and foundation in accordance with:
   - The 6th Edition 2013 AASHTO "Standard Specifications for Structural Supports for Highway Signs, Luminaires, and Traffic Signals, including all of the latest interim revisions.
   - The 2018 NCDOT "Standard Specifications for Roads and Structures." The latest addenda to the specifications can be found in the traffic signal project special provisions.
   - The 2018 NCDOT Roadway Standard Drawings.
   - The traffic signal project plans and special provisions.
   - The NCDOT "Metal Pole Standards" located at the following NCDOT website: https://connect.ncdot.gov/resources/safety/Pages/ITS-Design-Resources.aspx

DESIGN REQUIREMENTS

2. Design the traffic signal structure using the loading conditions shown in the elevation views. These are anticipated worst case "design loads" and may not represent the actual loads that will be applied at the time of the installation. The contractor should refer to the traffic signal plans for the actual loads that will be applied at the time of the installation.
3. Design all signal supports using stress ratios that do not exceed 0.9.
4. The camber design for the mast arm deflection should provide an appearance of a low pitched arch where the tip or the free end of the mast arm does not deflect below horizontal when fully loaded.
5. A clamp-type bolted mast arm-to-pole connection may be used instead of the welded ring stiffened box connection shown as long as the connection meets all of the design requirements.
6. Design base plate with 8 anchor bolt holes. Provide 2 inch x 60 inch anchor bolts.
7. The mast arm attachment height (H1) shown is based on the following design assumptions:
   a. Mast arm slope and deflection are not considered in determining the arm attachment height as they are assumed to offset each other.
   b. Signal heads are rigidly mounted and vertically centered on the mast arm.
   c. The roadway clearance height for design is as shown in the elevation views.
   d. The top of the pole base plate is 0.75 feet above the ground elevation.
   e. Refer to the Elevation Data Chart for the elevation differences between the proposed foundation ground level and the high point of the roadway.
8. The pole manufacturer will determine the total height (H2) of each pole using the greater of the following:
   - Mast arm attachment height (H1) plus 2 feet, or
   - H1 plus 1/2 of the total height of the mast arm attachment assembly plus 1 foot.
9. If pole location adjustments are required, the contractor must gain approval from the Engineer as this may affect the mast arm lengths and arm attachment heights. The contractor may contact the Signal Design Section Senior Structural Engineer for assistance at (919) 814-5000.
10. The contractor is responsible for verifying that the mast arm length shown will allow proper positioning of the signal heads over the roadway.
11. The contractor is responsible for providing soil penetration testing data (SPT) to the pole manufacturer so site specific foundations can be designed.

DOCUMENT NOT CONSIDERED FINAL UNLESS ALL SIGNATURES COMPLETED

RK&K
P: (919) 878-9560
8601 Six Forks Road Suite 700 | Raleigh, North Carolina 27615-2965
NC License No. F-0112
Engineers | Construction Managers | Planners | Scientists
www.rkk.com
Responsive People | Creative Solutions

NCDOT Wind Zone 2 (130 mph)

Prepared for the Offices of:
Transportation Mobility and Safety Division
Traffic Engineering Branch
Signal Design Section
750 N.Greenfield Pkwy.Garner,NC 27529

US 17 (OCEAN HIGHWAY)
AT
SR 1165 (THOMASBORO ROAD)

DIVISION 3 BRUNSWICK COUNTY CALABASH

PLAN DATE: NOVEMBER 2021 REVIEWED BY: DT SEARS

PREPARED BY: WP ERICKSON-JONES REVIEWED BY:

SCALE 0 N/A N/A

REVISIONS	INIT.	DATE

SEAL
NORTH CAROLINA PROFESSIONAL SEAL 044558 ENGINEER DAVID T. SEARS

DocuSigned by: David T Sears 11/19/2021
060183F28E67415...
SIGNATURE DATE

SIG. INVENTORY NO. 03-0416

11/19/2021
By: JPerfect
P:\Signals\Design\Mastarm Loading Diagrams\W5601GA_03-0416mp.dgn
design

PROJECT REFERENCE NO.	SHEET NO.
W-5601GA	SIG. 4.0

2 PHASE
FULLY ACTUATED
D03-06_CALABASH SIGNAL SYSTEM

NOTES

1. REFER TO "ROADWAY STANDARD DRAWINGS NCDOT" DATED JANUARY 2018 AND "STANDARD SPECIFICATIONS FOR ROADS AND STRUCTURES" DATED JANUARY 2018.
2. DO NOT PROGRAM SIGNAL FOR LATE NIGHT FLASHING OPERATION UNLESS OTHERWISE DIRECTED BY THE ENGINEER.
3. SET ALL DETECTOR UNITS TO PRESENCE MODE.
4. REFER TO PAVEMENT MARKING PLANS FOR STOP BAR LOCATIONS.
5. INSTALL PULL BOXES AT INTERVALS OF NO GREATER THAN 150 FT ALONG ALL RUNS OF LEAD-IN WIRE.
6. MAXIMUM TIMES SHOWN IN TIMING CHART ARE FOR FREE-RUN OPERATION ONLY. COORDINATED SIGNAL SYSTEM TIMING VALUES SUPERSEDE THESE VALUES.
7. CLOSED LOOP SYSTEM DATA: CONTROLLER ASSET #1120.

DEFAULT PHASING DIAGRAM

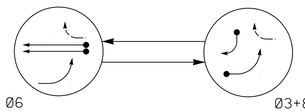

ALTERNATE PHASING DIAGRAM

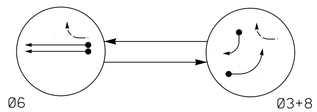

DEFAULT PHASING TABLE OF OPERATION			
SIGNAL FACE	PHASE Ø6	PHASE Ø3+8	PHASE FLASH
31,32	G	←	Y
61,62	G	R	Y
81,82,83	R	→	R

ALTERNATE PHASING TABLE OF OPERATION			
SIGNAL FACE	PHASE Ø6	PHASE Ø3+8	PHASE FLASH
31,32	R	←	Y
61,62	G	R	Y
81,82,83	R	→	R

OASIS 2070 LOOP & DETECTOR INSTALLATION CHART												
INDUCTIVE LOOPS					DETECTOR PROGRAMMING							
LOOP	SIZE (FT)	DISTANCE FROM STOPBAR (FT)	TURNS	NEW LOOP	PHASE	CALLING	EXTENSION	FULL TIME DELAY	STRETCH TIME	DELAY TIME	SYSTEM LOOP	NEW CARD
3A	6x40	0	2-4-2	Y	3	Y	Y	-	-	✳15	-	Y
6A	6x6	420	5	Y	6	Y	Y	-	-	-	-	Y
6B	6x6	420	5	Y	6	Y	Y	-	-	-	-	Y
8A	6x40	0	2-4-2	Y	8	Y	Y	-	-	15	-	Y

✳Disable Delay During Alternate Phasing Operation.

PHASING DIAGRAM DETECTION LEGEND

- DETECTED MOVEMENT
- UNDETECTED MOVEMENT (OVERLAP)
- UNSIGNALIZED MOVEMENT
- PEDESTRIAN MOVEMENT

SIGNAL FACE I.D.

All Heads L.E.D.

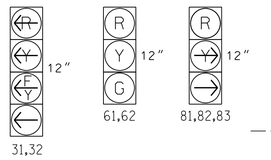

OASIS 2070 TIMING CHART			
	PHASE		
FEATURE	3	6	8
Min Green 1 *	7	14	7
Extension 1 *	2.0	6.0	2.0
Max Green 1 *	30	90	30
Yellow Clearance	3.0	5.2	5.2
Red Clearance	3.3	1.2	1.2
Walk 1 *	-	-	-
Don't Walk 1	-	-	-
Seconds Per Actuation *	-	1.5	-
Max Variable Initial *	-	46	-
Time Before Reduction *	-	15	-
Time To Reduce *	-	30	-
Minimum Gap	-	3.4	-
Recall Mode	-	MIN RECALL	-
Vehicle Call Memory	-	YELLOW	-
Dual Entry	X	-	X
Simultaneous Gap	ON	ON	ON

* These values may be field adjusted. Do not adjust Min Green and Extension times for phase 6 lower than what is shown. Min Green for all other phases should not be lower than 4 seconds.

LEGEND

PROPOSED		EXISTING
○→	Traffic Signal Head	●→
◐→	Modified Signal Head	N/A
⊣	Sign	⊣
□↓	Pedestrian Signal Head With Push Button & Sign	■↓
○	Signal Pole with Guy	●
○	Signal Pole with Sidewalk Guy	●
▭	Inductive Loop Detector	▭
⊠	Controller & Cabinet	⊠
□	Junction Box	■
·····	2-in Underground Conduit	·····
N/A	Right of Way	– – – –
→	Directional Arrow	→
▭	Metal Pole with Mastarm	▭
Ⓧ	Type III Signal Pedestal	◆
Ⓐ	No U-Turn Sign (R3-4)	Ⓐ
Ⓑ	"YIELD" Sign (R1-2)	Ⓑ

SIGNAL UPGRADE - FINAL DESIGN

DOCUMENT NOT CONSIDERED FINAL UNLESS ALL SIGNATURES COMPLETED

RK&K
P: (919) 878-9560
8601 Six Forks Road Suite 700 | Raleigh, North Carolina 27615-2965
NC License No. F-0112
Engineers | Construction Managers | Planners | Scientists
www.rkk.com
Responsive People | Creative Solutions

Prepared for the Offices of:
Transportation Mobility and Safety Division
North Carolina Department of Transportation
Signal Design Section
1750 N.Greenfield Pkwy,Garner,NC 27529

SCALE 0 40 1"=40'

US 17 (OCEAN HIGHWAY)
AT
SR 1304 (PEA LANDING ROAD)

DIVISION 3 BRUNSWICK COUNTY CALABASH

PLAN DATE: NOVEMBER 2021 REVIEWED BY: DT SEARS

PREPARED BY: WP ERICKSON-JONES REVIEWED BY:

REVISIONS	INIT.	DATE

SEAL
NORTH CAROLINA PROFESSIONAL SEAL 044558 ENGINEER DAVID T. SEARS

DocuSigned by: David T Sears 11/19/2021
0B0183F3E67A4E... SIGNATURE DATE

SIG. INVENTORY NO. 03-1120

11/19/2021
R:\Traffic\Signals\Design\Signals\W5601GA_SIG_03-1120.dgn
cbborg

PROJECT REFERENCE NO.	SHEET NO.
W-5601GA	Sig. 4.1

EDI MODEL 2018ECL-NC CONFLICT MONITOR PROGRAMMING DETAIL

(remove jumpers and set switches as shown)

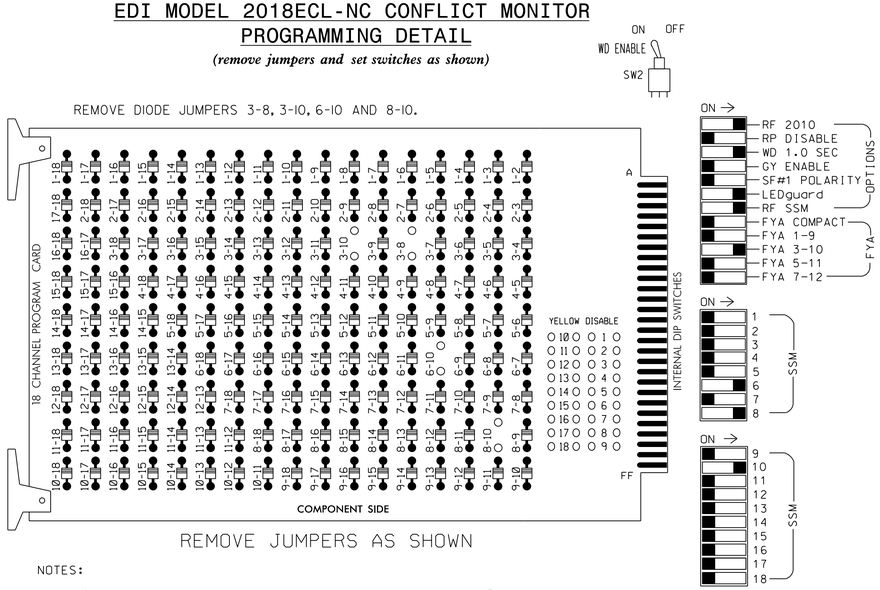

REMOVE JUMPERS AS SHOWN

NOTES:

1. Card is provided with all diode jumpers in place. Removal of any jumper allows its channels to run concurrently.
2. Ensure jumpers SEL2-SEL5 and SEL9 are present on the monitor board.
3. Ensure that Red Enable is active at all times during normal operation.
4. Connect serial cable from conflict monitor to comm. port 1 of 2070 controller. Ensure conflict monitor communicates with 2070.

■ = DENOTES POSITION OF SWITCH

NOTES

1. To prevent "flash-conflict" problems, insert red flash program blocks for all unused vehicle load switches in the output file. The installer shall verify that signal heads flash in accordance with the Signal Plans.
2. Program phases 3 and 8 for Dual Entry.
3. Enable Simultaneous Gap-Out for all Phases.
4. Program phase 6 for Variable Initial and Gap Reduction.
5. Program phase 6 for Startup In Green.
6. Program phase 6 for Yellow Flash.
7. If this signal will be managed by an ATMS software, enable controller and detector logging for all detectors used at this location.
8. The cabinet and controller are part of the D03-06 Calabash Signal System.

EQUIPMENT INFORMATION

CONTROLLER.....2070
CABINET.....332 w/ AUX
SOFTWARE.....ECONOLITE OASIS
CABINET MOUNT.....BASE
OUTPUT FILE POSITIONS...18 WITH AUX. OUTPUT FILE
LOAD SWITCHES USED.....S4,S8,S11,AUX S2
PHASES USED.....3,6,8
OVERLAP "A".....NOT USED
OVERLAP "B".....3+6
OVERLAP "C".....NOT USED
OVERLAP "D".....NOT USED

SIGNAL HEAD HOOK-UP CHART

LOAD SWITCH NO.	S1	S2	S3	S4	S5	S6	S7	S8	S9	S10	S11	S12	AUX S1	AUX S2	AUX S3	AUX S4	AUX S5	AUX S6
CMU CHANNEL NO.	1	2	13	3	4	14	5	6	15	7	8	16	9	10	17	11	12	18
PHASE	1	2	2 PED	3 ★	4	4 PED	5	6	6 PED	7	8	8 PED	OLA	OLB ★	SPARE	OLC	OLD	SPARE
SIGNAL HEAD NO.	NU	NU	NU	31,32	NU	NU	NU	61,62	NU	NU	81,82, 83	NU	NU	31,32	NU	NU	NU	NU
RED								134			107							
YELLOW				✳				135										
GREEN								136										
RED ARROW														A124				
YELLOW ARROW											108			A125				
FLASHING YELLOW ARROW														A126				
GREEN ARROW				118							109							

NU = Not Used

✳ Denotes install load resistor. See load resistor installation detail this sheet.

★ See pictorial of head wiring in detail below.

FYA SIGNAL WIRING DETAIL

(wire signal heads as shown)

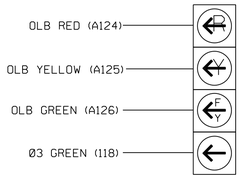

NOTE

The sequence display for this signal requires special logic programming. See sheet 2 for programming instructions.

INPUT FILE POSITION LAYOUT

(front view)

	1	2	3	4	5	6	7	8	9	10	11	12	13	14
FILE "I" U	SLOT EMPTY	SLOT EMPTY	SLOT EMPTY	SLOT EMPTY	Ø3 3A / NOT USED	SLOT EMPTY	SLOT EMPTY	SLOT EMPTY	SLOT EMPTY	SLOT EMPTY	SLOT EMPTY	SLOT EMPTY	SLOT EMPTY	FS DC ISOLATOR
FILE "I" L														ST DC ISOLATOR
FILE "J" U	SLOT EMPTY	Ø6 6A	SLOT EMPTY	SLOT EMPTY	SLOT EMPTY	Ø8 8A	SLOT EMPTY	SLOT EMPTY	SLOT EMPTY	SLOT EMPTY	SLOT EMPTY	SLOT EMPTY	SLOT EMPTY	SLOT EMPTY
FILE "J" L		Ø6 6B				NOT USED								

EX.: 1A, 2A, ETC. = LOOP NO.'S

FS = FLASH SENSE
ST = STOP TIME

INPUT FILE CONNECTION & PROGRAMMING CHART

LOOP NO.	LOOP TERMINAL	INPUT FILE POS.	PIN NO.	INPUT ASSIGNMENT NO.	DETECTOR NO.	NEMA PHASE	CALL	EXTEND	FULL TIME DELAY	STRETCH TIME	DELAY TIME
3A	TB4-5,6	I5U	58	20	3	3	Y	Y			15
	-	I5U	58	20 ★	53	3	Y	Y			
6A	TB3-5,6	J2U	40	2	6	6	Y	Y			
6B	TB3-7,8	J2L	44	6	16	6	Y	Y			
8A	TB5-9,10	J6U	42	4	8	8	Y	Y			15

★ See Input Assignment Programming Details for Alternate Phasing on sheet 3.

INPUT FILE POSITION LEGEND: J2L
FILE J
SLOT 2
LOWER

LOAD RESISTOR INSTALLATION DETAIL

ACCEPTABLE VALUES	
VALUE (ohms)	WATTAGE
1.5K - 1.9K	25W (min)
2.0K - 3.0K	10W (min)

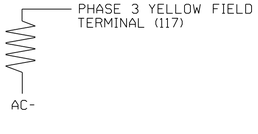

THIS ELECTRICAL DETAIL IS FOR THE SIGNAL DESIGN: 03-1120
DESIGNED: November 2021
SEALED: November 19, 2021
REVISED:

ELECTRICAL DETAIL SHEET 1 OF 4

DOCUMENT NOT CONSIDERED FINAL UNLESS ALL SIGNATURES COMPLETED

ELECTRICAL AND PROGRAMMING DETAILS FOR:

US 17 (OCEAN HIGHWAY)
AT
SR 1304 (PEA LANDING ROAD)

Division 3 | Brunswick County | Calabash

PLAN DATE: November 2021 | REVIEWED BY: J O Deaton
PREPARED BY: M W Yalch | REVIEWED BY:

REVISIONS	INIT.	DATE

SEAL
NORTH CAROLINA PROFESSIONAL SEAL 07438 ENGINEER JAMES O. DEATON

DocuSigned by: JAMES O. Deaton 11/19/2021
SIGNATURE | DATE

SIG. INVENTORY NO. 03-1120

Prepared for the Offices of:
NC Department of Transportation Mobility and Safety Division Traffic Engineering Branch Traffic Signals & Signals Management Section
750 N.Greenfield Pkwy.Garner,NC 27529

RK&K
P: (919) 878-9560
8601 Six Forks Road Suite 700 | Raleigh, North Carolina 27615-2965
NC License No. F-0112
Engineers | Construction Managers | Planners | Scientists
www.rkk.com
Responsive People | Creative Solutions

11/19/2021
R:\Traffic\Signals\Design\Signals\Electrical Details\W-5601GA_SIG.03-1120e.dgn
dsears

PROJECT REFERENCE NO.	SHEET NO.
W-5601GA	Sig. 4.2

LOGICAL I/O PROCESSOR PROGRAMMING DETAIL
TO PRODUCE SPECIAL FYA-PPLT SIGNAL SEQUENCE

(program controller as shown below)

1. FROM MAIN MENU PRESS '2' (PHASE CONTROL), THEN '1' (PHASE CONTROL FUNCTIONS). SCROLL TO THE BOTTOM OF THE MENU AND ENABLE ACT LOGIC COMMANDS 1, 2 AND 3.

2. FROM MAIN MENU PRESS '6' (OUTPUTS), THEN '3' (LOGICAL I/O PROCESSOR).

```
  LOGICAL I/O COMMAND #1  (+/-COMMAND#)
IF  ACTIVE PHASE       #3  IS ON
AND RED CLEAR ON PHASE #3  IS ON

            SCROLL DOWN

THEN:
SET OUTPUT  ASSIGNMENT #47 ON
SET OUTPUT  ASSIGNMENT #48 OFF
```

NOTE: LOGIC FOR PHASE 3 RED CLEAR WHEN TRANSITIONING FROM PHASE 3 TO PHASE 6 (HEADS 31,32)

PRESS '+'

```
  LOGICAL I/O COMMAND #2  (+/-COMMAND#)
IF  ACTIVE PHASE       #3  IS ON

            SCROLL DOWN

THEN:
SET OUTPUT  ASSIGNMENT #49 OFF
```

NOTE: LOGIC FOR SWITCHING FLASHING YELLOW ARROW "OFF" DURING PHASE 3 (HEADS 31,32)

PRESS '+'

```
  LOGICAL I/O COMMAND #3  (+/-COMMAND#)
IF  YELLOW ON PHASE    #3  IS ON

            SCROLL DOWN

THEN:
SET OUTPUT  ASSIGNMENT #48 ON
```

NOTE: LOGIC FOR YELLOW ARROW CLEARANCE FROM PHASE 3 (HEADS 31,32)

LOGIC I/O PROCESSOR PROGRAMMING COMPLETE

OUTPUT REFERENCE SCHEDULE

OUTPUT 47 = Overlap B Red
OUTPUT 48 = Overlap B Yellow
OUTPUT 49 = Overlap B Green

OVERLAP PROGRAMMING DETAIL

(program controller as shown below)

FROM MAIN MENU PRESS '8' (OVERLAPS), THEN '1' (VEHICLE OVERLAP SETTINGS).

PRESS '+'

```
 PAGE 1: VEHICLE OVERLAP 'B' SETTINGS
 PHASE:          |1234567891011121314151 6
VEH OVL PARENTS: |  X  X
VEH OVL NOT VEH: |
VEH OVL NOT PED: |
VEH OVL GRN EXT: |
STARTUP COLOR: _ RED  _ YELLOW  _ GREEN
FLASH COLORS:  _ RED  _ YELLOW  X GREEN
SELECT VEHICLE OVERLAP OPTIONS:   (Y/N)
FLASH YELLOW IN CONTROLLER FLASH?...N
GREEN EXTENSION (0-255 SEC).........0
YELLOW CLEAR (0=PARENT,3-25.5 SEC)..0.0
RED CLEAR (0=PARENT,0.1-25.5 SEC)...0.0
OUTPUT AS PHASE # (0=NONE, 1-16)....0
```

← NOTICE GREEN FLASH

OVERLAP PROGRAMMING COMPLETE

OVERLAP PROGRAMMING DETAIL FOR ALTERNATE PHASING

(program controller as shown below)

FROM MAIN MENU PRESS '8' (OVERLAPS), THEN '1' (VEHICLE OVERLAP SETTINGS). PRESS 'NEXT' TO ADVANCE TO PAGE 2.

PRESS '+'

NOTICE PAGE 2 →

```
 PAGE 2: VEHICLE OVERLAP 'B' SETTINGS
 PHASE:          |1234567891011121314151 6
VEH OVL PARENTS: |  X
VEH OVL NOT VEH: |
VEH OVL NOT PED: |
VEH OVL GRN EXT: |
STARTUP COLOR: _ RED  _ YELLOW  _ GREEN
FLASH COLORS:  _ RED  _ YELLOW  _ GREEN
SELECT VEHICLE OVERLAP OPTIONS:   (Y/N)
FLASH YELLOW IN CONTROLLER FLASH?...N
GREEN EXTENSION (0-255 SEC).........0
YELLOW CLEAR (0=PARENT,3-25.5 SEC)..0.0
RED CLEAR (0=PARENT,0.1-25.5 SEC)...0.0
OUTPUT AS PHASE # (0=NONE, 1-16)....0
```

←

OVERLAP PROGRAMMING COMPLETE

THIS ELECTRICAL DETAIL IS FOR
THE SIGNAL DESIGN: 03-1120
DESIGNED: November 2021
SEALED: November 19, 2021
REVISED:

ELECTRICAL DETAIL SHEET 2 OF 4

DOCUMENT NOT CONSIDERED FINAL UNLESS ALL SIGNATURES COMPLETED

RK&K
P: (919) 878-9560
8601 Six Forks Road Suite 700 | Raleigh, North Carolina 27615-2965
NC License No. F-0112
Engineers | Construction Managers | Planners | Scientists
www.rkk.com
Responsive People | Creative Solutions

ELECTRICAL AND PROGRAMMING DETAILS FOR:

Prepared for the Offices of:
NC Department of Transportation Mobility and Safety Division Traffic Engineering Branch Signals & Signals Management Section
750 N.Greenfield Pkwy.Garner,NC 27529

US 17 (OCEAN HIGHWAY)
AT
SR 1304 (PEA LANDING ROAD)

Division 3 | Brunswick County | Calabash

PLAN DATE: November 2021	REVIEWED BY: J O Deaton
PREPARED BY: M W Yalch	REVIEWED BY:

REVISIONS	INIT.	DATE

SEAL
NORTH CAROLINA PROFESSIONAL SEAL 07438 ENGINEER JAMES O. DEATON

DocuSigned by: JAMES O. Deaton 11/19/2021
SIGNATURE DATE

SIG. INVENTORY NO. 03-1120

11/19/2021
R:\Traffic\Signals\Projects\Signals\Electrical Details\W-5601GA_SIG_03-1120e.dgn
dsears

PROJECT REFERENCE NO.	SHEET NO.
W-5601GA	Sig. 4.3

INPUT PAGE 2 ASSIGNMENT PROGRAMMING DETAIL FOR ALTERNATE PHASING - LOOP 3A

(program controller as shown below)

NOTES: 1. THIS PROGRAMMING APPLIES FOR INPUT PAGE 2 ONLY. INPUT PAGE 1 WILL USE STANDARD DEFAULT SETTINGS. THIS PROGRAMMING IS NECESSARY FOR PROPER DETECTOR OPERATION DURING ALTERNATE PHASING OPERATION.

2. THE PROGRAMMING BELOW REASSIGNS DETECTOR 53 TO INPUT #20 SO THAT THE DELAY ON LOOP 3A CAN BE REDUCED FROM 15 SECONDS TO 0 SECONDS.

FROM MAIN MENU PRESS '5' (INPUTS), THEN PRESS 'NEXT' TO GET TO INPUT PAGE '2'. PRESS THE '+' KEY UNTIL INPUT 20 IS REACHED.

```
PAGE: 2 C1 PIN:58  VEHICLE DETECTOR
INPUT ASSIGNMENT #.................20
DEBOUNCE TIME (0-25.5 SEC).........0.5
DELAY TIME (0-25.5 SEC).............0.0
HOLD-OVER TIME (0-25.5 SEC).........0.0
ASSIGNMENT SELECTION:
NOT ENABLED (Y/N)..................._
VEHICLE DETECTOR (1-64).............3
PEDESTRIAN DETECTOR (1-16).........._
ALTERNATE PED DETECTOR (1-16)......._
PREEMPT (1-10)......................._
INVERTED PREEMPT (1-10).............._
STOP TIME (Y/N)......................_
FLASH SENSE (Y/N)...................._
DOOR OPEN (Y/N)......................_
MANUAL CONTROL ENABLE (Y/N).........._
MANUAL CONTROL ADVANCE (Y/N)........._
SPECIAL FUNCTION ALARM (1-8)........._
TOD HOUR SYCHRONIZATION (0-23)......._
FORCE OFF RING (1-4)................._
HOLD PHASES (1-16)..................._
PLAN (65=FLSH,66=FREE)..._  OFFSET#.._
CHANGE PHASE SEQUENCE PAGE (1-12)...._
CHANGE PHASE TIMING PAGE (1-4)......._
CHANGE PHASE CONTROL PAGE (1-4)....._
CHANGE OVERLAP CONTROL PAGE (1-4)...._
CHANGE INPUT PAGE (1-4).............._
CHANGE OUTPUT PAGE (1-4)............._
OVERRIDE PHASE CONTROL FUNCTION (Y)._
```

→ ENTER '53' TO REASSIGN THE VEHICLE DETECTOR FOR THIS INPUT →

(LOOP 3A - PHASE 3)

```
PAGE: 2 C1 PIN:58  VEHICLE DETECTOR
INPUT ASSIGNMENT #.................20
DEBOUNCE TIME (0-25.5 SEC).........0.5
DELAY TIME (0-25.5 SEC).............0.0
HOLD-OVER TIME (0-25.5 SEC).........0.0
ASSIGNMENT SELECTION:
NOT ENABLED (Y/N)..................._
VEHICLE DETECTOR (1-64).............53
PEDESTRIAN DETECTOR (1-16).........._
ALTERNATE PED DETECTOR (1-16)......._
PREEMPT (1-10)......................._
INVERTED PREEMPT (1-10).............._
STOP TIME (Y/N)......................_
FLASH SENSE (Y/N)...................._
DOOR OPEN (Y/N)......................_
MANUAL CONTROL ENABLE (Y/N).........._
MANUAL CONTROL ADVANCE (Y/N)........._
SPECIAL FUNCTION ALARM (1-8)........._
TOD HOUR SYCHRONIZATION (0-23)......._
FORCE OFF RING (1-4)................._
HOLD PHASES (1-16)..................._
PLAN (65=FLSH,66=FREE)..._  OFFSET#.._
CHANGE PHASE SEQUENCE PAGE (1-12)...._
CHANGE PHASE TIMING PAGE (1-4)......._
CHANGE PHASE CONTROL PAGE (1-4)....._
CHANGE OVERLAP CONTROL PAGE (1-4)...._
CHANGE INPUT PAGE (1-4).............._
CHANGE OUTPUT PAGE (1-4)............._
OVERRIDE PHASE CONTROL FUNCTION (Y)._
```

PROGRAMMING COMPLETE

FROM MAIN MENU PRESS '7' (DETECTORS), THEN PRESS '1' FOR VEHICLE DETECTORS. PRESS THE '-' KEY TO GET TO VEHICLE DETECTOR #53.

```
VEHICLE DETECTOR #53  SETTINGS (+-,1-64)
SETTING:                          (Y/N)
ENABLE DETECTOR.....................N
ENABLE LOGGING......................N
ENABLE DIAGNOSTICS..................N
SPEED TRAP..........................N
CALL DETECTOR.......................Y
EXTENSION DETECTOR..................Y
MODE 2 STOP BAR.....................N
SWITCHING DETECTOR..................N
DUPLICATING DETECTOR................N
ENABLE FULL TIME DELAY..............N
IF FAILED, SET MIN RECALL?..........N
IF FAILED, SET MAX1 RECALL?.........N
IF FAILED, SET MAX2 RECALL?.........N
PHASE#          ¦1234567891011121314516
PHASES ASSIGNED ¦
SWITCH/DUPLICATE¦
LOOP SIZE (0-255 FT).....6
SPEED TRAP DISTANCE (0-255 FT)......0
STOP BAR TIME (0-255 SEC)...........0
STRETCH (0-25.5 SEC)................0.0
DELAY (0-255 SEC)...................0
MAX CALLS/MIN (0-255)..............255
MIN CALLS/DIAGNOSTIC PERIOD (0-255).0
MAX OCCUPANCY (0-100%).............100
EXTENSION DISABLE TIME (0-255 SEC)..0
QUEUE MAX OCCUPANCY TIME (0-255)....0
QUEUE GAP RESET TIME (0-25.5).......0.0
PREEMPTION INDEX FOR QUEUE (0-10)...0
```

→ ENTER 'Y' FOR ENABLE DETECTOR →

→ ENTER '3' FOR PHASES ASSIGNED →

→ ENSURE DELAY IS '0' →

```
VEHICLE DETECTOR #53  SETTINGS (+-,1-64)
SETTING:                          (Y/N)
ENABLE DETECTOR.....................Y
ENABLE LOGGING......................N
ENABLE DIAGNOSTICS..................N
SPEED TRAP..........................N
CALL DETECTOR.......................Y
EXTENSION DETECTOR..................Y
MODE 2 STOP BAR.....................N
SWITCHING DETECTOR..................N
DUPLICATING DETECTOR................N
ENABLE FULL TIME DELAY..............N
IF FAILED, SET MIN RECALL?..........N
IF FAILED, SET MAX1 RECALL?.........N
IF FAILED, SET MAX2 RECALL?.........N
PHASE#          ¦1234567891011121314516
PHASES ASSIGNED ¦  X
SWITCH/DUPLICATE¦
LOOP SIZE (0-255 FT).....6
SPEED TRAP DISTANCE (0-255 FT)......0
STOP BAR TIME (0-255 SEC)...........0
STRETCH (0-25.5 SEC)................0.0
DELAY (0-255 SEC)...................0
MAX CALLS/MIN (0-255)..............255
MIN CALLS/DIAGNOSTIC PERIOD (0-255).0
MAX OCCUPANCY (0-100%).............100
EXTENSION DISABLE TIME (0-255 SEC)..0
QUEUE MAX OCCUPANCY TIME (0-255)....0
QUEUE GAP RESET TIME (0-25.5).......0.0
PREEMPTION INDEX FOR QUEUE (0-10)...0
```

DETECTOR PROGRAMMING COMPLETE

NOTE: DETECTOR IS PROGRAMMED PER THE INPUT FILE CONNECTION AND PROGRAMMING CHART SHOWN ON SHEET 1.

THIS ELECTRICAL DETAIL IS FOR THE SIGNAL DESIGN: 03-1120
DESIGNED: November 2021
SEALED: November 19, 2021
REVISED:

ELECTRICAL DETAIL SHEET 3 OF 4

DOCUMENT NOT CONSIDERED FINAL UNLESS ALL SIGNATURES COMPLETED

RK&K
P: (919) 878-9560
8601 Six Forks Road Suite 700 | Raleigh, North Carolina 27615-2965
NC License No. F-0112
Engineers | Construction Managers | Planners | Scientists
www.rkk.com
Responsive People | Creative Solutions

ELECTRICAL AND PROGRAMMING DETAILS FOR:

US 17 (OCEAN HIGHWAY)
AT
SR 1304 (PEA LANDING ROAD)

Division 3 | Brunswick County | Calabash

PLAN DATE: November 2021	REVIEWED BY:	J O Deaton	
PREPARED BY: M W Yalch	REVIEWED BY:		

REVISIONS	INIT.	DATE

Prepared for the Offices of:
NC Department of Transportation Mobility and Safety Division Traffic Engineering Branch Signals Management Section
750 N.Greenfield Pkwy.Garner,NC 27529

SEAL
NORTH CAROLINA PROFESSIONAL SEAL 07438 ENGINEER JAMES O. DEATON

DocuSigned by: JAMES O. Deaton 11/19/2021
4DF8AC439BDA4DE... SIGNATURE DATE

SIG. INVENTORY NO. 03-1120

11/19/2021
R:\Traffic\Signals\Design\Signals\Electrical Details\W-5601GA_SIG_03-1120e.dgn
dsears

PROJECT REFERENCE NO.	SHEET NO.
W-5601GA	Sig. 4.4

ALTERNATE PHASING ACTIVATION DETAIL

TO RUN ALT. PHASING DURING COORDINATION - SELECT ALL PAGE CHANGES (AS SHOWN BELOW) WITHIN COORDINATION PLAN PROGRAMMING.

TO RUN ALT. PHASING DURING FREE RUN - PROGRAM PAGE CHANGES (SHOWN BELOW) IN SEPARATE TIME OF DAY EVENTS. IF PAGE 1 IS USED, NO EVENT PROGRAMMING IS NECESSARY FOR THAT PARTICULAR PAGE.

PHASING	INPUTS PAGE	OVERLAPS PAGE
ACTIVE PAGES REQUIRED TO RUN NORMAL PHASING	1	1
ACTIVE PAGES REQUIRED TO RUN ALTERNATE PHASING	2	2

NOTE: PAGES NOT SHOWN (i.e. sequence, phase control, etc.) SHOULD REMAIN AS '1', OR AS DEFINED BY TIMING ENGINEER.

IMPORTANT: IF ALT. PHASING IS USED DURING FREE RUN AND COORDINATION, DO NOT OPERATE TIME OF DAY PAGE CHANGE EVENTS CONCURRENTLY WITH COORDINATION PLAN EVENTS IN THE EVENT SCHEDULER. (EX. FREE RUN PAGE CHANGE EVENT SHOULD END BEFORE COORDINATION PLAN EVENT STARTS AND VICE-VERSA).

ALTERNATE PHASING PAGE CHANGE SUMMARY

THE FOLLOWING IS A SUMMARY OF WHAT TAKES PLACE WHEN THESE OUTPUT/INPUT PAGE CHANGES ACTIVATE TO CALL THE "ALTERNATE PHASING":

OVERLAPS PAGE 2: Modifies overlap parent phases for heads 31 and 32 to run protected turns only.

INPUTS PAGE 2: Reduces delay time for phase 3 call on loop 3A to 0 seconds.

THIS ELECTRICAL DETAIL IS FOR
THE SIGNAL DESIGN: 03-1120
DESIGNED: November 2021
SEALED: November 19, 2021
REVISED:

ELECTRICAL DETAIL SHEET 4 OF 4

DOCUMENT NOT CONSIDERED FINAL UNLESS ALL SIGNATURES COMPLETED

RK&K
P: (919) 878-9560
8601 Six Forks Road Suite 700 | Raleigh, North Carolina 27615-2965
NC License No. F-0112
Engineers | Construction Managers | Planners | Scientists
www.rkk.com
Responsive People | Creative Solutions

ELECTRICAL AND PROGRAMMING DETAILS FOR:

Prepared for the Offices of:
NC DOT Transportation Mobility and Safety Division
Traffic Engineering Branch
Traffic Signals & Signals Management Section
750 N.Greenfield Pkwy,Garner,NC 27529

US 17 (OCEAN HIGHWAY)
AT
SR 1304 (PEA LANDING ROAD)

Division 3 | Brunswick County | Calabash

PLAN DATE: November 2021 | REVIEWED BY: J O Deaton
PREPARED BY: M W Yalch | REVIEWED BY:

REVISIONS	INIT.	DATE

SEAL
NORTH CAROLINA PROFESSIONAL SEAL 07438 ENGINEER JAMES O. DEATON

DocuSigned by: JAMES O. Deaton 11/19/2021
SIGNATURE | DATE

SIG. INVENTORY NO. 03-1120

11/19/2021
R:\Traffic\Signals\Design\Signals\Electrical Details\W-5601GA_SIG_03-1120e.dgn
dsogers

Design Loading for METAL POLE NO. 3

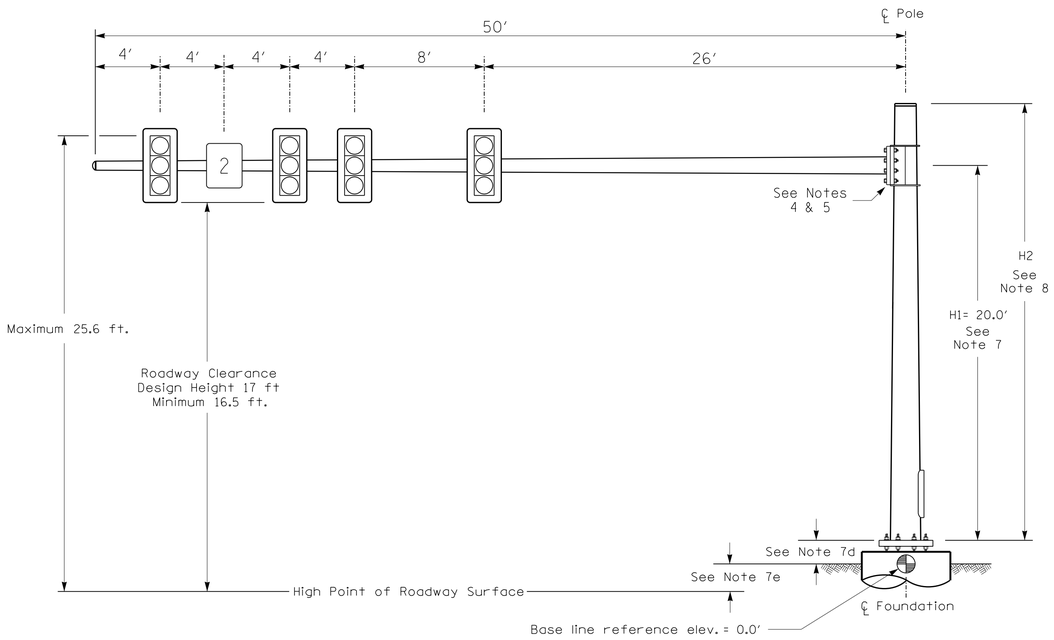

Elevation View

SPECIAL NOTE

The contractor is responsible for verifying that the mast arm attachment height (H1) will provide the "Design Height" clearance from the roadway before submitting final shop drawings for approval. Verify elevation data below which was obtained by field measurement or from available project survey data.

Elevation Data for Mast Arm Attachment (H1)

Elevation Differences for:	Pole 3	
Baseline reference point at ℄ Foundation @ ground level	0.0 ft.	
Elevation difference at High point of roadway surface	+1.5 ft.	
Elevation difference at Edge of travelway or face of curb	+1.0 ft.	

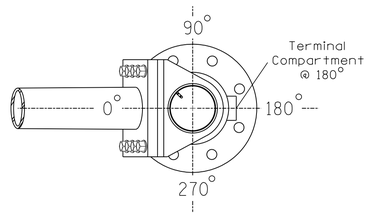

POLE RADIAL ORIENTATION

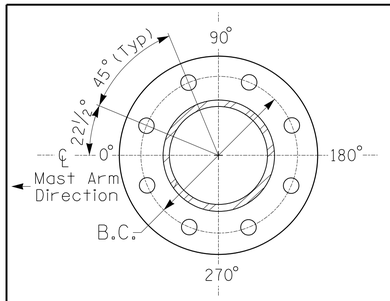

8 BOLT BASE PLATE DETAIL

See Note 6

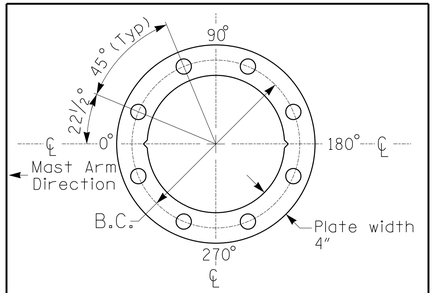

BASE PLATE TEMPLATE & ANCHOR BOLT LOCK PLATE DETAIL
For 8 Bolt Base Plate

METAL POLE No. 3

PROJECT REFERENCE NO.	SHEET NO.
W-5601GA	SIG. 4.5

MAST ARM LOADING SCHEDULE

LOADING SYMBOL	DESCRIPTION	AREA	SIZE	WEIGHT
	RIGID MOUNTED SIGNAL HEAD 12"-3 SECTION-WITH BACKPLATE	9.3 S.F.	25.5"W X 52.5"L	60 LBS
2	SIGN RIGID MOUNTED	9.0 S.F.	36.0"W X 36.0"L	17 LBS

NOTES

DESIGN REFERENCE MATERIAL

1. Design the traffic signal structure and foundation in accordance with:
   - The 6th Edition 2013 AASHTO "Standard Specifications for Structural Supports for Highway Signs, Luminaires, and Traffic Signals, including all of the latest interim revisions.
   - The 2018 NCDOT "Standard Specifications for Roads and Structures." The latest addenda to the specifications can be found in the traffic signal project special provisions.
   - The 2018 NCDOT Roadway Standard Drawings.
   - The traffic signal project plans and special provisions.
   - The NCDOT "Metal Pole Standards" located at the following NCDOT website: https://connect.ncdot.gov/resources/safety/Pages/ITS-Design-Resources.aspx

DESIGN REQUIREMENTS

2. Design the traffic signal structure using the loading conditions shown in the elevation views. These are anticipated worst case "design loads" and may not represent the actual loads that will be applied at the time of the installation. The contractor should refer to the traffic signal plans for the actual loads that will be applied at the time of the installation.
3. Design all signal supports using stress ratios that do not exceed 0.9.
4. The camber design for the mast arm deflection should provide an appearance of a low pitched arch where the tip or the free end of the mast arm does not deflect below horizontal when fully loaded.
5. A clamp-type bolted mast arm-to-pole connection may be used instead of the welded ring stiffened box connection shown as long as the connection meets all of the design requirements.
6. Design base plate with 8 anchor bolt holes. Provide 2 inch x 60 inch anchor bolts.
7. The mast arm attachment height (H1) shown is based on the following design assumptions:
   a. Mast arm slope and deflection are not considered in determining the arm attachment height as they are assumed to offset each other.
   b. Signal heads are rigidly mounted and vertically centered on the mast arm.
   c. The roadway clearance height for design is as shown in the elevation views.
   d. The top of the pole base plate is 0.75 feet above the ground elevation.
   e. Refer to the Elevation Data Chart for the elevation differences between the proposed foundation ground level and the high point of the roadway.
8. The pole manufacturer will determine the total height (H2) of each pole using the greater of the following:
   - Mast arm attachment height (H1) plus 2 feet, or
   - H1 plus 1/2 of the total height of the mast arm attachment assembly plus 1 foot.
9. If pole location adjustments are required, the contractor must gain approval from the Engineer as this may affect the mast arm lengths and arm attachment heights. The contractor may contact the Signal Design Section Senior Structural Engineer for assistance at (919) 814-5000.
10. The contractor is responsible for verifying that the mast arm length shown will allow proper positioning of the signal heads over the roadway.
11. The contractor is responsible for providing soil penetration testing data (SPT) to the pole manufacturer so site specific foundations can be designed.

DOCUMENT NOT CONSIDERED FINAL UNLESS ALL SIGNATURES COMPLETED

RK&K
P: (919) 878-9560
8601 Six Forks Road Suite 700 | Raleigh, North Carolina 27615-2965
NC License No. F-0112
Engineers | Construction Managers | Planners | Scientists
www.rkk.com
Responsive People | Creative Solutions

NCDOT Wind Zone 2 (130 mph)

Prepared for the Offices of:
Traffic Engineering Branch, Signal Design Section

750 N.Greenfield Pkwy.Garner,NC 27529

SCALE 0 N/A N/A

US 17 (OCEAN HIGHWAY)
AT
SR 1304 (PEA LANDING ROAD)

DIVISION 3 BRUNSWICK COUNTY CALABASH

PLAN DATE: NOVEMBER 2021 REVIEWED BY: DT SEARS

PREPARED BY: WP ERICKSON-JONES REVIEWED BY:

REVISIONS	INIT.	DATE

SEAL
NORTH CAROLINA PROFESSIONAL SEAL 044558 ENGINEER DAVID T. SEARS

DocuSigned by: David T Sears 11/19/2021
060183F28E67415...
SIGNATURE DATE

SIG. INVENTORY NO. 03-1120

11/19/2021
By: ERICKSON,JONES
P:\Traffic\Signals\Design\Mastarm Loading Diagrams\W5601GA_03-1120mp.dgn
design

PROJECT REFERENCE NO.	SHEET NO.
W-5601GA	SIG. 5.0

2 PHASE FULLY ACTUATED D03-06_CALABASH SIGNAL SYSTEM

NOTES

1. REFER TO "ROADWAY STANDARD DRAWINGS NCDOT" DATED JANUARY 2018 AND "STANDARD SPECIFICATIONS FOR ROADS AND STRUCTURES" DATED JANUARY 2018.
2. DO NOT PROGRAM SIGNAL FOR LATE NIGHT FLASHING OPERATION UNLESS OTHERWISE DIRECTED BY THE ENGINEER.
3. SET ALL DETECTOR UNITS TO PRESENCE MODE.
4. ACTIVATE FLASHERS 3 SECONDS PRIOR TO THE END OF PHASE 6 GREEN.
5. REFER TO PAVEMENT MARKING PLANS FOR STOP BAR LOCATIONS.
6. INSTALL PULL BOXES AT INTERVALS OF NO GREATER THAN 150 FT ALONG ALL RUNS OF LEAD-IN WIRE.
7. MAXIMUM TIMES SHOWN IN TIMING CHART ARE FOR FREE-RUN OPERATION ONLY. COORDINATED SIGNAL SYSTEM TIMING VALUES SUPERSEDE THESE VALUES.
8. CLOSED LOOP SYSTEM DATA: CONTROLLER ASSET #1119.

DETAULT PHASING DIAGRAM

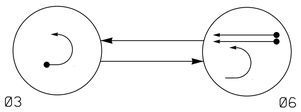

ALTERNATE PHASING DIAGRAM

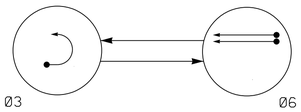

PHASING DIAGRAM DETECTION LEGEND

- DETECTED MOVEMENT
- UNDETECTED MOVEMENT (OVERLAP)
- UNSIGNALIZED MOVEMENT
- PEDESTRIAN MOVEMENT

DEFAULT PHASING TABLE OF OPERATION

SIGNAL FACE	PHASE Ø3	PHASE Ø6	PHASE PREA7R1	PHASE PRE7L	PHASE FLASH
31,32	(Y)	(Y)	(R)	(R)	(R)
61,62	R	G	R	Y	Y
63,64,65,66	ON	OFF	ON	OFF	OFF

ALTERNATE PHASING TABLE OF OPERATION

SIGNAL FACE	PHASE Ø3	PHASE Ø6	PHASE PREA7R1	PHASE PRE7L	PHASE FLASH
31,32	(R)	(R)	(R)	(R)	(R)
61,62	R	G	R	Y	Y
63,64,65,66	ON	OFF	ON	OFF	OFF

SIGNAL FACE I.D.

All Heads L.E.D.

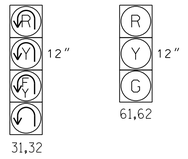

BEACON TABLE OF OPERATION

SIGNAL FACE	INTERVAL 1	INTERVAL 2
63,65	ON	OFF
64,66	OFF	ON

Figure 1

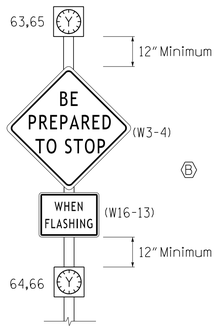

FAILURE PREEMPT

(High Priority)

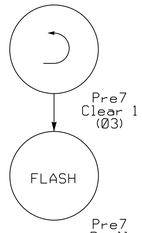

FAILURE PREEMPT

FUNCTION	PRE 7
Interval 1 – Green Clear	15
Interval 1 – Yellow Clear	0.0*
Interval 1 – Red Clear	0.0*
Interval 2 – Dwell Green	255
Interval 2 – Dwell Yellow	0.0*
Interval 2 – Dwell Red	0.0*
Interval 5 – Exit Green	1
Interval 5 – Yellow	0.0
Interval 5 – Red	0.0
Exit Phase(s)	6
Priority	High
Delay Time	0.0
Min Green Before Pre	1
Ped Clear Before Pre	0
Yellow Clear Before Pre	0.0*
Red Clear Before Pre	0.0*
Dwell Min Time	14
Flash Dwell Interval?	Y
Enable Backup Protection	N
Ped Clear Through Yellow	N
Omit Overlaps	-

* Time defaults to time used for phase during normal operation

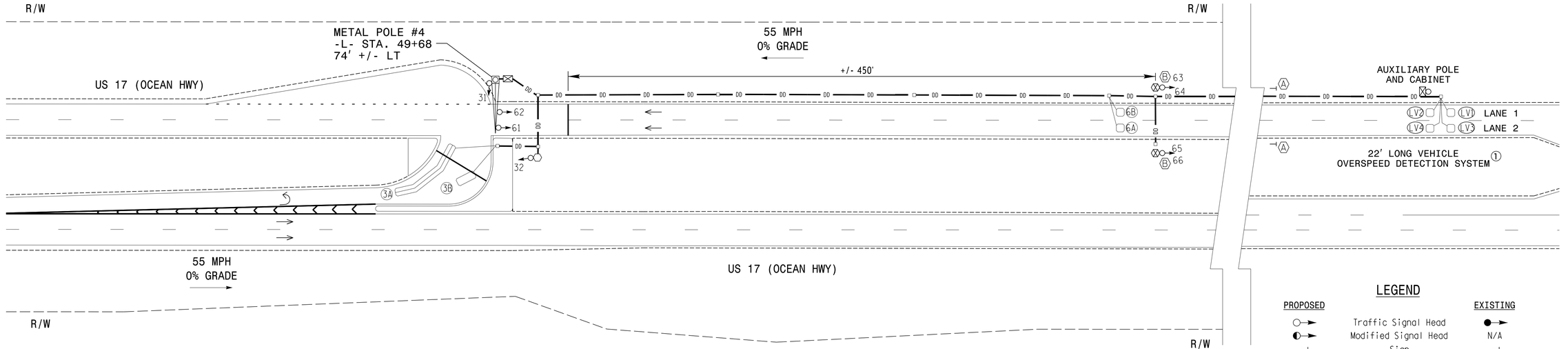

OASIS 2070 TIMING CHART

FEATURE	PHASE 3	PHASE 6
Min Green 1 *	7	14
Extension 1 *	2.0	6.0
Max Green 1 *	30	90
Yellow Clearance	3.0	5.2
Red Clearance	4.5	1.3
Walk 1 *	-	-
Don't Walk 1	-	-
Seconds Per Actuation *	-	1.5
Max Variable Initial *	-	46
Time Before Reduction *	-	15
Time To Reduce *	-	30
Minimum Gap	-	3.4
Recall Mode	-	MIN RECALL
Vehicle Call Memory	-	YELLOW
Dual Entry	-	-
Simultaneous Gap	ON	ON

* These values may be field adjusted. Do not adjust Min Green and Extension times for phase 6 lower than what is shown. Min Green for all other phases should not be lower than 4 seconds.

OASIS 2070 LOOP & DETECTOR INSTALLATION CHART

INDUCTIVE LOOPS: LOOP	SIZE (FT)	DISTANCE FROM STOPBAR (FT)	TURNS	NEW LOOP	DETECTOR PROGRAMMING: PHASE	CALLING	EXTENSION	FULL TIME DELAY	STRETCH TIME	DELAY TIME	SYSTEM LOOP	NEW CARD
3A	6x60	+10	2-4-2	Y	3	Y	Y	-	-	✳15	-	Y
3B	6x15	0	3	Y	3	Y	Y	-	-	✳15	-	Y
6A	6x6	420	5	Y	6	Y	Y	-	-	-	-	Y
6B	6x6	420	5	Y	6	Y	Y	-	-	-	-	Y

✳Disable Delay During Alternate Phasing Operation.

LONG VEHICLE OVERSPEED DETECTION SYSTEM
LOOP & DETECTION INSTALLATION CHART

INDUCTIVE LOOPS: LOOP NO.	SIZE (ft)	TURNS	DIST. FROM STOPBAR (ft)	NEW	EXISTING	DETECTOR UNITS: SOURCE=SCZ SOURCE=ZCZ APPROACH DIRECTION	LANE NO.	MOUNTING SCZ=SIDE ZCZ=OVER	CHANNEL	NEMA PHASE	TIMING: FEATURE	TIMING: TIME	PLACE CALL DURING PHASE	INHIBIT DELAY DURING GREEN?
LV1	6'X6'	4	1015'	X		SCZ ①	1	1	1	6*	NONE	- SEC.	ALL	NO
LV2	6'X6'	4	999'	X		SCZ ①	1	1	2	6*	NONE	- SEC.	ALL	NO
LV3	6'X6'	4	1015'	X		ZCZ	2	2	1	6*	NONE	- SEC.	ALL	NO
LV4	6'X6'	4	999'	X		ZCZ	2	2	2	6*	NONE	- SEC.	ALL	NO
LVODS THRESHOLD SPEED (MPH)	55									6				
LVODS EXTEND TIME	12 SEC.									6				

*Phase hold output to controller

LEGEND

PROPOSED		EXISTING
○→	Traffic Signal Head	●→
◐→	Modified Signal Head	N/A
⊣	Sign	⊣
□↓	Pedestrian Signal Head With Push Button & Sign	■↓
○	Signal Pole with Guy	●
○	Signal Pole with Sidewalk Guy	●
▭	Inductive Loop Detector	▭
⊠	Controller & Cabinet	⊠
□	Junction Box	■
.....	2-in Underground Conduit	.....
N/A	Right of Way	– – – –
→	Directional Arrow	→
○	Metal Pole with Mastarm	■
⬡	Type II Signal Pedestal	⬢
⊗	Type III Signal Pedestal	⬢
Ⓐ	Signal Ahead Sign (W3-3)	Ⓐ
Ⓑ	"BE PREPARED TO STOP" Sign (W3-4) w/ "WHEN FLASHING" (W16-13p) Plaque Ⓑ (See Figure 1)	

NEW INSTALLATION

DOCUMENT NOT CONSIDERED FINAL UNLESS ALL SIGNATURES COMPLETED

RK&K
P: (919) 878-9560
8601 Six Forks Road Suite 700 | Raleigh, North Carolina 27615-2965
NC License No. F-0112
Engineers | Construction Managers | Planners | Scientists
www.rkk.com
Responsive People | Creative Solutions

Prepared for the Offices of:
Transportation Mobility and Safety Division
NORTH CAROLINA DEPARTMENT OF TRANSPORTATION
Signal Design Section
750 N.Greenfield Pkwy,Garner,NC 27529

SCALE 0 40 1"=40'

US 17 (OCEAN HIGHWAY)
AT THOMASBORO ROAD
NB U-TURN

DIVISION 3 BRUNSWICK COUNTY CALABASH

PLAN DATE: NOVEMBER 2021 REVIEWED BY: C.B. HOLDEN

PREPARED BY: D.T.SEARS REVIEWED BY:

REVISIONS	INIT.	DATE

SEAL
NORTH CAROLINA PROFESSIONAL SEAL 044558 ENGINEER DAVID T. SEARS

DocuSigned by: David T Sears 11/19/2021
080183F28E7415E SIGNATURE DATE

SIG. INVENTORY NO. 03-1119

11/19/2021
R:\Traffic\Signals\Design\Signals\W-5601GA_SIG_03-1119.dgn
dsears

PROJECT REFERENCE NO.	SHEET NO.
W-5601GA	Sig. 5.1

EDI MODEL 2018ECL-NC CONFLICT MONITOR PROGRAMMING DETAIL

(remove jumpers and set switches as shown)

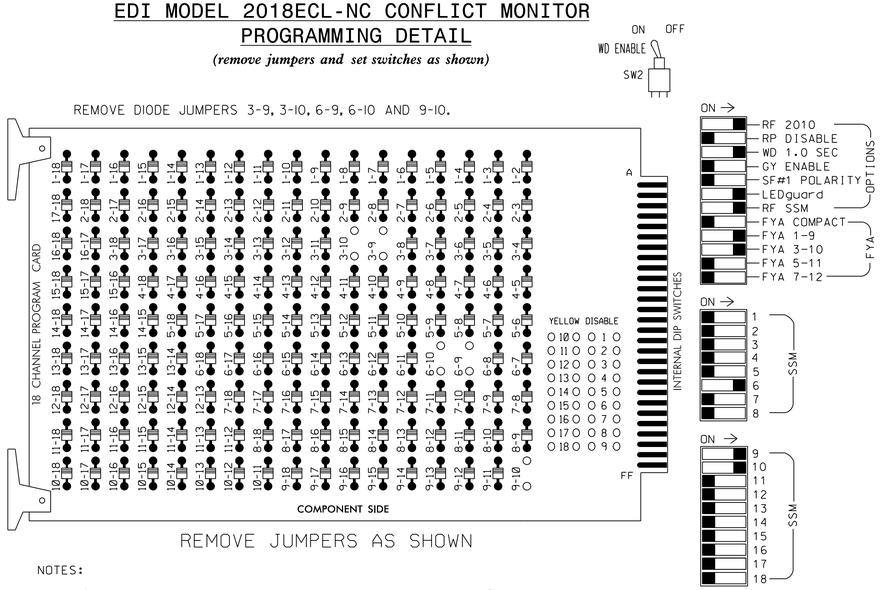

REMOVE JUMPERS AS SHOWN

■ = DENOTES POSITION OF SWITCH

NOTES:

1. Card is provided with all diode jumpers in place. Removal of any jumper allows its channels to run concurrently.
2. Ensure jumpers SEL2-SEL5 and SEL9 are present on the monitor board.
3. Ensure that Red Enable is active at all times during normal operation.
4. Connect serial cable from conflict monitor to comm. port 1 of 2070 controller. Ensure conflict monitor communicates with 2070.

NOTES

1. To prevent "flash-conflict" problems, insert red flash program blocks for all unused vehicle load switches in the output file. The installer shall verify that signal heads flash in accordance with the Signal Plans.
2. Enable Simultaneous Gap-Out for all Phases.
3. Program phase 6 for Variable Initial and Gap Reduction.
4. Program phase 6 for Startup In Green.
5. Program phase 6 for Yellow Flash.
6. If this signal will be managed by an ATMS software, enable controller and detector logging for all detectors used at this location.
7. The cabinet and controller are part of the D03-06 Calabash Signal System.

EQUIPMENT INFORMATION

CONTROLLER.....2070
CABINET.....332 w/ AUX
SOFTWARE.....ECONOLITE OASIS
CABINET MOUNT.....BASE
OUTPUT FILE POSITIONS...18 WITH AUX. OUTPUT FILE
LOAD SWITCHES USED.....S1,S4,S6*,S8,S12*,AUX S1,AUX S2
PHASES USED.....3,6
OVERLAP "A".....3+6
OVERLAP "B".....3+6
OVERLAP "C".....NOT USED
OVERLAP "D".....NOT USED

*USED FOR ADVANCE BEACON CONTROL ONLY

SIGNAL HEAD HOOK-UP CHART

LOAD SWITCH NO.	S1	S2	S3	S4	S5	S6	S7	S8	S9	S10	S11	S12	AUX S1	AUX S2	AUX S3	AUX S4	AUX S5	AUX S6
CMU CHANNEL NO.	1	2	13	3	4	14	5	6	15	7	8	16	9	10	17	11	12	18
PHASE	3★	2	2 PED	3★	4	4 PED	5	6	6 PED	7	8	8 PED	OLA★	OLB★	SPARE	OLC	OLD	SPARE
SIGNAL HEAD NO.	31	NU	NU	32	NU	ADVANCE BEACON	NU	61,62	NU	NU	NU	ADVANCE BEACON	31	32	NU	NU	NU	NU
RED								134										
YELLOW	*			*				135										
GREEN								136										
RED ARROW													A121	A124				
YELLOW ARROW													A122	A125				
FLASHING YELLOW ARROW													A123	A126				
GREEN ARROW	127			118														
PED YELLOW						**						**						
						*						*						

NU = Not Used

* Denotes install load resistor. See load resistor installation detail this sheet.

** Special advance beacons will be wired to S6-Y (4 PED YELLOW) and S12-Y (8 PED YELLOW). See wiring and programming details on sheet 5 of this electrical detail.

★ See pictorial of head wiring in detail below.

See Output Reassignment Programming Detail of S1 on sheet 8.

INPUT FILE POSITION LAYOUT

(front view)

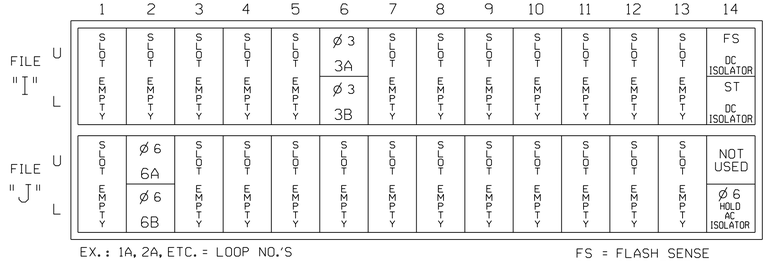

EX.: 1A, 2A, ETC. = LOOP NO.'S

FS = FLASH SENSE
ST = STOP TIME

INPUT FILE CONNECTION & PROGRAMMING CHART

LOOP NO.	LOOP TERMINAL	INPUT FILE POS.	PIN NO.	INPUT ASSIGNMENT NO.	DETECTOR NO.	NEMA PHASE	CALL	EXTEND	FULL TIME DELAY	STRETCH TIME	DELAY TIME
3A	TB4-9,10	I6U	41	3	4	3	Y	Y			15
	-	I6U	41	3 ★	53	3	Y	Y			
3B	TB4-11,12	I6L	45	7	14	3	Y	Y			15
	-	I6L	45	7 ★	54	3	Y	Y			
6A	TB3-5,6	J2U	40	2	6	6	Y	Y			
6B	TB3-7,8	J2L	44	6	16	6	Y	Y			

★ See Input Assignment Programming Details for Alternate Phasing on sheets 6 and 7.

INPUT FILE POSITION LEGEND: J2L
FILE J
SLOT 2
LOWER

FYA SIGNAL WIRING DETAIL

(wire signal heads as shown)

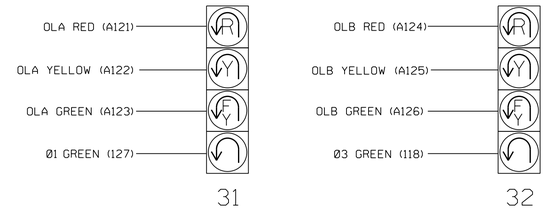

NOTE

The sequence display for these signals require special logic programming. See sheet 2 for programming instructions.

LOAD RESISTOR INSTALLATION DETAIL

ACCEPTABLE VALUES	
VALUE (ohms)	WATTAGE
1.5K - 1.9K	25W (min)
2.0K - 3.0K	10W (min)

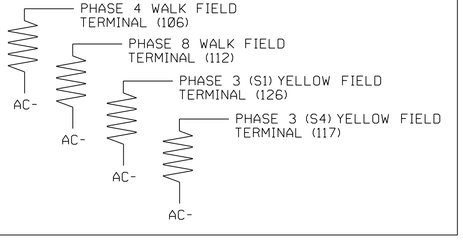

THIS ELECTRICAL DETAIL IS FOR THE SIGNAL DESIGN: Ø3-1119
DESIGNED: November 2021
SEALED: November 19, 2021
REVISED:

RK&K
P: (919) 878-9560
8601 Six Forks Road Suite 700 | Raleigh, North Carolina 27615-2965
NC License No. F-0112
Engineers | Construction Managers | Planners | Scientists
www.rkk.com
Responsive People | Creative Solutions

ELECTRICAL DETAIL SHEET 1 OF 8

DOCUMENT NOT CONSIDERED FINAL UNLESS ALL SIGNATURES COMPLETED

ELECTRICAL AND PROGRAMMING DETAILS FOR:

Prepared for the Offices of:
NC DEPARTMENT OF TRANSPORTATION Traffic Engineering Mobility and Safety Division Signals Management Section
750 N.Greenfield Pkwy,Garner,NC 27529

US 17 (OCEAN HIGHWAY) AT THOMASBORO ROAD NB U-TURN

Division 3 | Brunswick County | Calabash

PLAN DATE: November 2021 | REVIEWED BY: J O Deaton
PREPARED BY: M W Yalch | REVIEWED BY:

REVISIONS	INIT.	DATE

SEAL
NORTH CAROLINA PROFESSIONAL SEAL 07438 ENGINEER JAMES O. DEATON

DocuSigned by: JAMES O. Deaton 11/19/2021
SIGNATURE | DATE

SIG. INVENTORY NO. 03-1119

11/19/2021
R:\Traffic\Signals\Design\Signals\Electrical Details\W-5601GA_SIG.03-1119e.dgn
dsears

PROJECT REFERENCE NO.	SHEET NO.
W-5601GA	Sig. 5.2

LOGICAL I/O PROCESSOR PROGRAMMING DETAIL
TO PRODUCE SPECIAL FYA-PPLT SIGNAL SEQUENCE

(program controller as shown below)

1. FROM MAIN MENU PRESS '2' (PHASE CONTROL), THEN '1' (PHASE CONTROL FUNCTIONS). SCROLL TO THE BOTTOM OF THE MENU AND ENABLE ACT LOGIC COMMANDS 1,2,3,4,5 AND 6.

2. FROM MAIN MENU PRESS '6' (OUTPUTS), THEN '3' (LOGICAL I/O PROCESSOR).

```
  LOGICAL I/O COMMAND #1  (+/-COMMAND#)
IF  ACTIVE PHASE       #3  IS ON
AND RED CLEAR ON PHASE #3  IS ON

          SCROLL DOWN

 THEN:
 SET OUTPUT  ASSIGNMENT #50 ON
 SET OUTPUT  ASSIGNMENT #51 OFF
```

NOTE: LOGIC FOR PHASE 3 RED CLEAR WHEN TRANSITIONING FROM PHASE 3 TO PHASE 6 (HEAD 31).

PRESS '+'

```
  LOGICAL I/O COMMAND #2  (+/-COMMAND#)
IF  ACTIVE PHASE       #3  IS ON

          SCROLL DOWN

 THEN:
 SET OUTPUT  ASSIGNMENT #52 OFF
```

NOTE: LOGIC FOR SWITCHING FLASHING YELLOW ARROW "OFF" DURING PHASE 3 (HEAD 31).

PRESS '+'

```
  LOGICAL I/O COMMAND #3  (+/-COMMAND#)
IF  YELLOW ON PHASE    #3  IS ON

          SCROLL DOWN

 THEN:
 SET OUTPUT  ASSIGNMENT #51 ON
```

NOTE: LOGIC FOR YELLOW ARROW CLEARANCE FROM PHASE 3 (HEAD 31).

PRESS '+'

```
  LOGICAL I/O COMMAND #4  (+/-COMMAND#)
IF  ACTIVE PHASE       #3  IS ON
AND RED CLEAR ON PHASE #3  IS ON

          SCROLL DOWN

 THEN:
 SET OUTPUT  ASSIGNMENT #47 ON
 SET OUTPUT  ASSIGNMENT #48 OFF
```

NOTE: LOGIC FOR PHASE 3 RED CLEAR WHEN TRANSITIONING FROM PHASE 3 TO PHASE 6 (HEAD 32)

PRESS '+'

```
  LOGICAL I/O COMMAND #2  (+/-COMMAND#)
IF  ACTIVE PHASE       #3  IS ON

          SCROLL DOWN

 THEN:
 SET OUTPUT  ASSIGNMENT #49 OFF
```

NOTE: LOGIC FOR SWITCHING FLASHING YELLOW ARROW "OFF" DURING PHASE 3 (HEAD 32)

PRESS '+'

```
  LOGICAL I/O COMMAND #3  (+/-COMMAND#)
IF  YELLOW ON PHASE    #3  IS ON

          SCROLL DOWN

 THEN:
 SET OUTPUT  ASSIGNMENT #48 ON
```

NOTE: LOGIC FOR YELLOW ARROW CLEARANCE FROM PHASE 3 (HEAD 32)

LOGIC I/O PROCESSOR PROGRAMMING COMPLETE

OUTPUT REFERENCE SCHEDULE

OUTPUT 47 = Overlap B Red
OUTPUT 48 = Overlap B Yellow
OUTPUT 49 = Overlap B Green
OUTPUT 50 = Overlap A Red
OUTPUT 51 = Overlap A Yellow
OUTPUT 52 = Overlap A Green

OVERLAP PROGRAMMING DETAIL FOR DEFAULT PHASING

(program controller as shown below)

FROM MAIN MENU PRESS '8' (OVERLAPS), THEN '1' (VEHICLE OVERLAP SETTINGS).

```
 PAGE 1: VEHICLE OVERLAP 'A' SETTINGS
 PHASE:          |123456789101112131415 16
VEH OVL PARENTS: |  X  X
VEH OVL NOT VEH: |
VEH OVL NOT PED: |
VEH OVL GRN EXT: |
STARTUP COLOR: _ RED  _ YELLOW  _ GREEN
FLASH COLORS:  _ RED  _ YELLOW  X GREEN
SELECT VEHICLE OVERLAP OPTIONS:   (Y/N)
FLASH YELLOW IN CONTROLLER FLASH?...N
GREEN EXTENSION (0-255 SEC).........0
YELLOW CLEAR (0=PARENT,3-25.5 SEC)..0.0
RED CLEAR (0=PARENT,0.1-25.5 SEC)...0.0
OUTPUT AS PHASE # (0=NONE, 1-16)....0
```

← NOTICE GREEN FLASH

PRESS '+' ONCE

```
 PAGE 1: VEHICLE OVERLAP 'B' SETTINGS
 PHASE:          |123456789101112131415 16
VEH OVL PARENTS: |  X  X
VEH OVL NOT VEH: |
VEH OVL NOT PED: |
VEH OVL GRN EXT: |
STARTUP COLOR: _ RED  _ YELLOW  _ GREEN
FLASH COLORS:  _ RED  _ YELLOW  X GREEN
SELECT VEHICLE OVERLAP OPTIONS:   (Y/N)
FLASH YELLOW IN CONTROLLER FLASH?...N
GREEN EXTENSION (0-255 SEC).........0
YELLOW CLEAR (0=PARENT,3-25.5 SEC)..0.0
RED CLEAR (0=PARENT,0.1-25.5 SEC)...0.0
OUTPUT AS PHASE # (0=NONE, 1-16)....0
```

← NOTICE GREEN FLASH

OVERLAP PROGRAMMING COMPLETE

OVERLAP PROGRAMMING DETAIL FOR ALTERNATE PHASING

(program controller as shown below)

FROM MAIN MENU PRESS '8' (OVERLAPS), THEN '1' (VEHICLE OVERLAP SETTINGS). PRESS 'NEXT' TO ADVANCE TO PAGE 2.

NOTICE PAGE 2 →

```
 PAGE 2: VEHICLE OVERLAP 'A' SETTINGS
 PHASE:          |123456789101112131415 16
VEH OVL PARENTS: |  X
VEH OVL NOT VEH: |
VEH OVL NOT PED: |
VEH OVL GRN EXT: |
STARTUP COLOR: _ RED  _ YELLOW  _ GREEN
FLASH COLORS:  _ RED  _ YELLOW  _ GREEN
SELECT VEHICLE OVERLAP OPTIONS:   (Y/N)
FLASH YELLOW IN CONTROLLER FLASH?...N
GREEN EXTENSION (0-255 SEC).........0
YELLOW CLEAR (0=PARENT,3-25.5 SEC)..0.0
RED CLEAR (0=PARENT,0.1-25.5 SEC)...0.0
OUTPUT AS PHASE # (0=NONE, 1-16)....0
```

PRESS '+' ONCE

NOTICE PAGE 2 →

```
 PAGE 2: VEHICLE OVERLAP 'B' SETTINGS
 PHASE:          |123456789101112131415 16
VEH OVL PARENTS: |  X
VEH OVL NOT VEH: |
VEH OVL NOT PED: |
VEH OVL GRN EXT: |
STARTUP COLOR: _ RED  _ YELLOW  _ GREEN
FLASH COLORS:  _ RED  _ YELLOW  _ GREEN
SELECT VEHICLE OVERLAP OPTIONS:   (Y/N)
FLASH YELLOW IN CONTROLLER FLASH?...N
GREEN EXTENSION (0-255 SEC).........0
YELLOW CLEAR (0=PARENT,3-25.5 SEC)..0.0
RED CLEAR (0=PARENT,0.1-25.5 SEC)...0.0
OUTPUT AS PHASE # (0=NONE, 1-16)....0
```

OVERLAP PROGRAMMING COMPLETE

THIS ELECTRICAL DETAIL IS FOR
THE SIGNAL DESIGN: 03-1119
DESIGNED: November 2021
SEALED: November 19, 2021
REVISED:

ELECTRICAL DETAIL SHEET 2 OF 8

DOCUMENT NOT CONSIDERED FINAL UNLESS ALL SIGNATURES COMPLETED

RK&K
P: (919) 878-9560
8601 Six Forks Road Suite 700 | Raleigh, North Carolina 27615-2965
NC License No. F-0112
Engineers | Construction Managers | Planners | Scientists
www.rkk.com
Responsive People | Creative Solutions

ELECTRICAL AND PROGRAMMING DETAILS FOR:

Prepared for the Offices of:
Traffic Engineering, Mobility and Safety Division
NC DEPARTMENT OF TRANSPORTATION
Signals Management Section
750 N.Greenfield Pkwy.Garner,NC 27529

US 17 (OCEAN HIGHWAY) AT THOMASBORO ROAD NB U-TURN

Division 3 | Brunswick County | Calabash

PLAN DATE: November 2021	REVIEWED BY: J O Deaton
PREPARED BY: M W Yalch	REVIEWED BY:

REVISIONS	INIT.	DATE

SEAL
NORTH CAROLINA PROFESSIONAL SEAL 07438 ENGINEER JAMES O. DEATON

DocuSigned by: JAMES O. Deaton 11/19/2021
SIGNATURE | DATE

SIG. INVENTORY NO. 03-1119

11/19/2021
R:\Traffic\Signals\Design\Signals\Electrical Details\W-5601GA_SIG_03-1119e.dgn
dsears

PROJECT REFERENCE NO.	SHEET NO.
W-5601GA	Sig. 5.3

INPUT ASSIGNMENT PROGRAMMING DETAIL FOR LONG VEHICLE OVERSPEED DETECTION SYSTEM PHASE HOLD INPUTS

(program controller as shown below)

FROM MAIN MENU PRESS '5' (INPUTS), THEN '+' UNTIL PIN 52 (INPUT 14) IS REACHED.

```
PAGE: 1 C1 PIN:52  HOLD PHASES
INPUT ASSIGNMENT #.................14
DEBOUNCE TIME (0-25.5 SEC).........0.5
DELAY TIME (0-25.5 SEC).............0.0
HOLD-OVER TIME (0-25.5 SEC).........0.0
ASSIGNMENT SELECTION:
NOT ENABLED (Y/N)..................._
VEHICLE DETECTOR (1-64)............._
PEDESTRIAN DETECTOR (1-16).........._
ALTERNATE PED DETECTOR (1-16)......._
PREEMPT (1-10)......................_
INVERTED PREEMPT (1-10)............._
STOP TIME (Y/N)....................._
FLASH SENSE (Y/N)..................._
DOOR OPEN (Y/N)....................._
MANUAL CONTROL ENABLE (Y/N)........._
MANUAL CONTROL ADVANCE (Y/N)......._
SPECIAL FUNCTION ALARM (1-8)......._
TOD HOUR SYCHRONIZATION (0-23)....._
FORCE OFF RING (1-4)..............._
HOLD PHASES (1-16).................6
PLAN (65=FLSH,66=FREE)..._  OFFSET#..._
CHANGE PHASE SEQUENCE PAGE (1-12)..._
CHANGE PHASE TIMING PAGE (1-4)....._
CHANGE PHASE CONTROL PAGE (1-4)....._
CHANGE OVERLAP CONTROL PAGE (1-4)..._
CHANGE INPUT PAGE (1-4)............._
CHANGE OUTPUT PAGE (1-4)............_
OVERRIDE PHASE CONTROL FUNCTION (Y)._
```

PRESS THE 'ENT KEY, THEN PRESS '+' UNTIL PIN '0' (INPUT 64) IS REACHED

```
PAGE: 1 C1 PIN:0  PLAN
INPUT ASSIGNMENT #.................64
DEBOUNCE TIME (0-25.5 SEC).........0.5
DELAY TIME (0-25.5 SEC).............0.0
HOLD-OVER TIME (0-25.5 SEC).........0.0
ASSIGNMENT SELECTION:
NOT ENABLED (Y/N)..................._
VEHICLE DETECTOR (1-64)............._
PEDESTRIAN DETECTOR (1-16).........._
ALTERNATE PED DETECTOR (1-16)......._
PREEMPT (1-10).....................7
INVERTED PREEMPT (1-10)............._
STOP TIME (Y/N)....................._
FLASH SENSE (Y/N)..................._
DOOR OPEN (Y/N)....................._
MANUAL CONTROL ENABLE (Y/N)........._
MANUAL CONTROL ADVANCE (Y/N)......._
SPECIAL FUNCTION ALARM (1-8)......._
TOD HOUR SYCHRONIZATION (0-23)....._
FORCE OFF RING (1-4)..............._
HOLD PHASES (1-16).................._
PLAN (65=FLSH,66=FREE)..._  OFFSET#..._
CHANGE PHASE SEQUENCE PAGE (1-12)..._
CHANGE PHASE TIMING PAGE (1-4)....._
CHANGE PHASE CONTROL PAGE (1-4)....._
CHANGE OVERLAP CONTROL PAGE (1-4)..._
CHANGE INPUT PAGE (1-4)............._
CHANGE OUTPUT PAGE (1-4)............_
OVERRIDE PHASE CONTROL FUNCTION (Y)._
```

PROGRAMMING COMPLETE

FLASH PREEMPTION PROGRAMMING DETAIL FOR PREEMPT 7

(program controller as shown below)

THIS PREEMPT PLACES THE CONTROLLER IN FLASH IF THE LVOD HOLD TIME EXCEEDS 240 SECONDS.

FROM MAIN MENU PRESS 'A' (PREEMPTION), THEN '1' (STANDARD PREEMPTIONS). PRESS 'NEXT' UNTIL PREEMPTION #7 IS REACHED.

```
   PREEMPTION  #7  SETTINGS (NEXT:1-10)
INTERVAL/TIMING  :  CLEAR/DWELL PHASES
  GRN YEL  RED   :1234567891011121314151 6
1  15  0.0  0.0  :  X
2 255  0.0  0.0  :     X
3   0  0.0  0.0  :
4   0  0.0  0.0  :
5   1  0.0  0.0  :     X
EXIT CALLS       :
                OPTIONS
PRIORITY (Y/N TO SELECT) ............HIGH
DELAY TIMER (0-255 SEC) .............0.0
MIN GREEN BEFORE PRE (0= DEFAULT)....1
PED CLEAR BEFORE PRE (0= DEFAULT)....0
YELLOW CLEAR BEFORE PRE (0= DEFAULT).0.0
RED CLEAR BEFORE PRE (0= DEFAULT)....0.0
DWELL MIN TIMER (0-255 SEC) .........14
DWELL MAX TIMER (0=OFF,1-255MIN) ....0
DWELL HOLD-OVER TIMER (0-255) .......0
LATCH CALL? .........................N
LINK TO NEXT PREEMPT? ...............N
ENABLE BACKUP PROTECTION? ...........N
HOLD CLEAR 1 PHASES DURING DELAY? ...N
FAST GREEN FLASH DWELL PHASES? ......N
PED CLEARANCE THROUGH YELLOW? .......N
INHIBIT OVERLAP GREEN EXTENSION? ....N
SERVICE DURING SOFTWARE FLASH? ......N
REST IN RED DURING DWELL INTERVAL? ..N
FLASH DWELL INTERVAL? ...............Y
ALLOW PEDS IN DWELL INTERVAL? .......N
RE-TIME DWELL INTERVAL? .............N
OVERLAPS:                 : ABCDEFGHIJKLMNOP
DWELL INT FLASH YELLOW    :
OMIT OVERLAPS:            :
```

LOGICAL I/O PROCESSOR PROGRAMMING DETAIL TO PUT CABINET IN FLASH UPON LVODS FAIL

(program controller as shown below)

1. From Main Menu press '2' (Phase Control), then '1' (Phase Control Functions). Scroll to the bottom of the menu and enable Act Logic Command 7.

2. From Main Menu press '6' (Outputs), Then '3' (Logical I/O Processor).

3. The programming shown below will place the controller in flash if the output of the Long Vehicle Detection Unit is active for longer than 4 minutes.

```
  LOGICAL I/O COMMAND #7  (+/-COMMAND#)
IF  INPUT   ASSIGNMENT #14 IS ON

                  SCROLL DOWN
THEN:
    DELAY FOR  240.0 SECONDS
SET INPUT   ASSIGNMENT #64 ON
```

LOGIC I/O PROCESSOR PROGRAMMING COMPLETE

INPUT 14 = LVODS Input (06 Hold)
INPUT 64 = Preempt 7

LONG VEHICLE DETECTION AC ISOLATOR (MODEL 252) OUTPUT PROGRAMMING DETAIL

(set DIP switches as shown below)

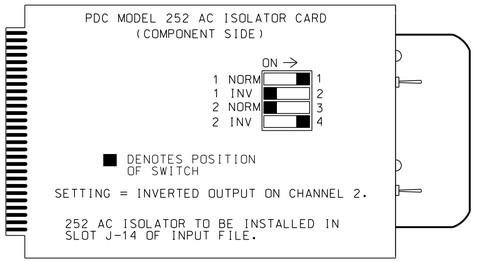

NOTE: IF ANOTHER MANUFACTURER TYPE OF AC ISOLATOR IS USED, OUTPUT PROGRAMMING IS LIKELY NOT TO EQUATE TO THAT SHOWN ABOVE.

THIS ELECTRICAL DETAIL IS FOR
THE SIGNAL DESIGN: 03-1119
DESIGNED: November 2021
SEALED: November 19, 2021
REVISED:

ELECTRICAL DETAIL SHEET 3 OF 8

DOCUMENT NOT CONSIDERED FINAL UNLESS ALL SIGNATURES COMPLETED

RK&K
P: (919) 878-9560
8601 Six Forks Road Suite 700 | Raleigh, North Carolina 27615-2965
NC License No. F-0112
Engineers | Construction Managers | Planners | Scientists
www.rkk.com
Responsive People | Creative Solutions

ELECTRICAL AND PROGRAMMING DETAILS FOR:

Prepared for the Offices of:
NC Department of Transportation Mobility and Safety Division Traffic Engineering Branch Signals Management Section
750 N.Greenfield Pkwy,Garner,NC 27529

US 17 (OCEAN HIGHWAY)
AT THOMASBORO ROAD
NB U-TURN

Division 3 | Brunswick County | Calabash

PLAN DATE: November 2021 | REVIEWED BY: J O Deaton
PREPARED BY: M W Yalch | REVIEWED BY:

REVISIONS	INIT.	DATE

SEAL
NORTH CAROLINA PROFESSIONAL SEAL 07438 ENGINEER JAMES O. DEATON

DocuSigned by: JAMES O. Deaton 11/19/2021
SIGNATURE DATE

SIG. INVENTORY NO. 03-1119

11/19/2021
R:\Traffic\Signals\Designs\Signals\Electrical Details\W-5601GA_SIG_03-1119e.dgn
dsears

PROJECT REFERENCE NO.	SHEET NO.
W-5601GA	Sig. 5.4

WIRING DETAIL FOR NORTHSTAR CONTROLS NQ4 LONG VEHICLE / OVERSPEED DETECTION SYSTEM

(wire unit as shown below)

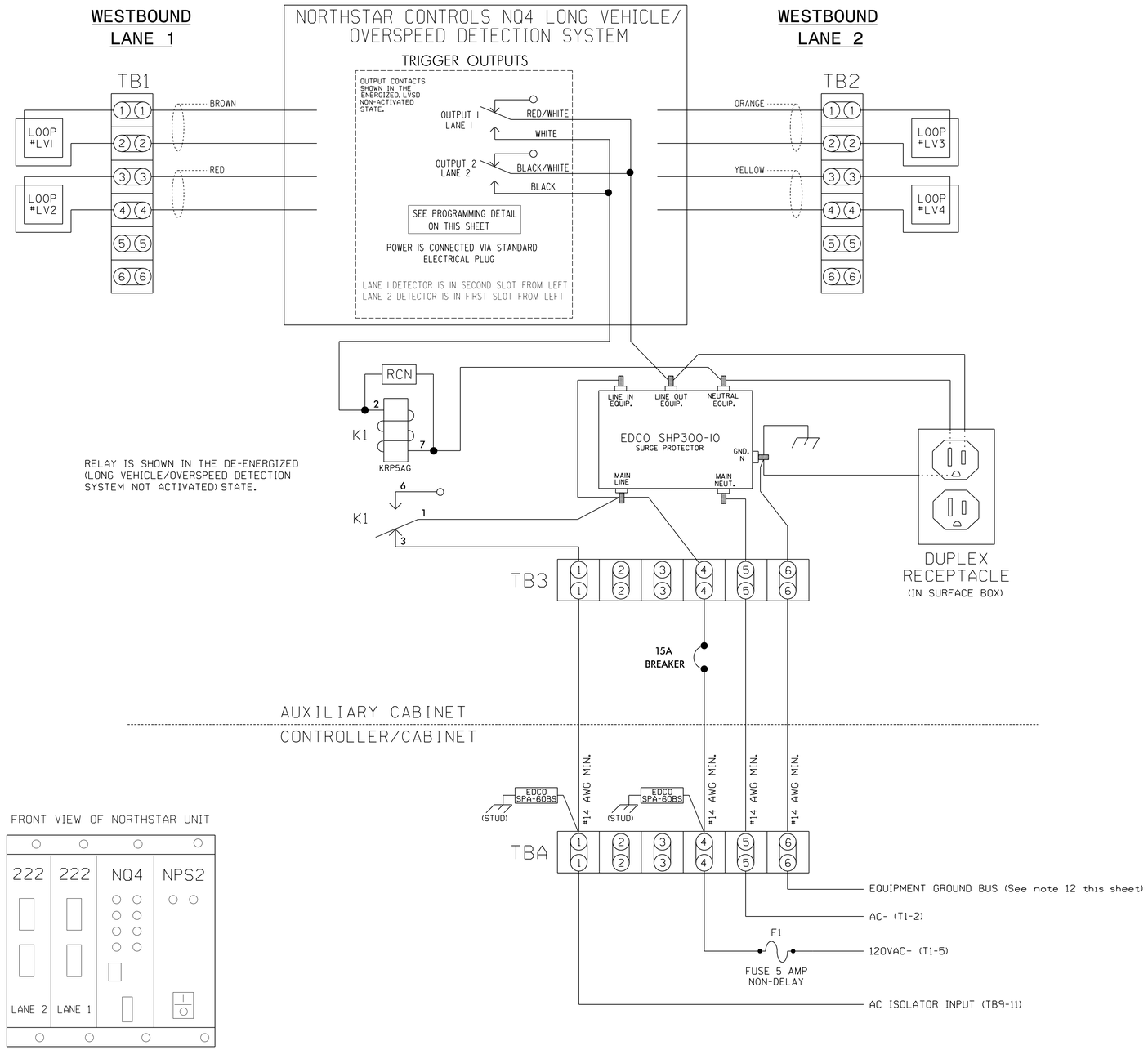

FRONT VIEW OF NORTHSTAR UNIT

NOTES

1. All loop lead-ins shall be twisted.
2. Loop spacing is critical to the proper operation of this Overspeed Detection System. Make sure loop spacing is correctly programmed in NQ4 Unit.
3. Ensure that connectors on rear of NQ4 are seated securely.
4. NQ4 Unit shall be located in an auxiliary cabinet adjacent to Speed Warning System loops.
5. Unit power is connected by standard electrical plug.
6. Terminal strips TB1, TB2, TB3, & TBA to be added by installer.
7. Relay 'K1' is a SPDT with an 120VAC coil. Potter & Brumfield no. KRP5AGAG, Dot Material no. 625028600.
8. The RC Network across the coil of 'K1' is a .1 micro farad, 100 ohm. Dot Material no. 106018075. P&B no. 104M06QC100
9. EDCO SPA-60BS is a surge protector for 120VAC interconnect circuits. Dot Material no. 625022076.
10. EDCO SHP300-10 is an AC service surge protector. Dot Material no. 625022075.
11. Do not install ground rods at auxiliary cabinet.
12. Install equipment ground from controller cabinet to auxiliary cabinet if not already present.
13. Install disconnect if there is no disconnect present at auxiliary cabinet.
14. IMPORTANT! A jumper must be installed between input file terminals J14-E and J14-K if not already present.
15. IMPORTANT! For proper operation of the Long Vehicle Detection Unit, tie TB9-12 to AC neutral.
16. IMPORTANT! Make sure Channel 2 of AC Isolator card inserted at input file position J14 is set for inverted operation. See the detail on sheet 3.

NORTHSTAR CONTROLS MODEL NQ4 PROGRAMMING DETAIL

(program unit as shown)

NOTE: UNIT MUST BE PROGRAMMED USING PC AND TERMINAL EMULATION PROGRAM. FOR CONNECTION TO TERMINAL EMULATOR REFER TO NQ4 OPERATION MANUAL.

PROGRAM NQ4 BY TYPING THE FOLLOWING COMMANDS

1. SET SPEED=55
2. SET LENGTH=22'
3. SET ALARMTIME=12
4. SET SEPARATION=16' (LEADING EDGE TO LEADING EDGE) (THIS VALUE MAY VARY, PROGRAM ACTUAL MEASURED SEPARATION)
5. SET LOOP LENGTH=6' (THIS VALUE MAY VARY, PROGRAM ACTUAL MEASURED LOOP LENGTH)
6. SAVE

NOTE

PROGRAMMING APPLIES TO BOTH LANE 1 AND LANE 2

THIS ELECTRICAL DETAIL IS FOR THE SIGNAL DESIGN: 03-1119
DESIGNED: November 2021
SEALED: November 19, 2021
REVISED:

RK&K
P: (919) 878-9560
8601 Six Forks Road Suite 700 | Raleigh, North Carolina 27615-2965
NC License No. F-0112
Engineers | Construction Managers | Planners | Scientists
www.rkk.com
Responsive People | Creative Solutions

ELECTRICAL DETAIL SHEET 4 OF 8

DOCUMENT NOT CONSIDERED FINAL UNLESS ALL SIGNATURES COMPLETED

ELECTRICAL AND PROGRAMMING DETAILS FOR:

Prepared for the Offices of:
NC Department of Transportation Mobility and Safety Division Traffic Engineering Branch Signals Management Section

750 N.Greenfield Pkwy.Garner,NC 27529

US 17 (OCEAN HIGHWAY) AT THOMASBORO ROAD NB U-TURN

Division 3 | Brunswick County | Calabash

PLAN DATE: November 2021 | REVIEWED BY: J O Deaton
PREPARED BY: M W Yalch | REVIEWED BY:

REVISIONS	INIT.	DATE

SEAL
NORTH CAROLINA PROFESSIONAL SEAL 07438 ENGINEER JAMES O. DEATON

DocuSigned by: James O. Deaton 11/19/2021
REPRESENTATIVE SIGNATURE DATE

SIG. INVENTORY NO. 03-1119

11/19/2021
R:\Traffic\Signals\Design\Signals\Electrical Details\W-5601GA_SIG_03-1119a.dgn
dsears

PROJECT REFERENCE NO.	SHEET NO.
W-5601GA	Sig. 5.5

ADVANCE BEACON
OUTPUT ASSIGNMENT PROGRAMMING DETAIL

(program controller as shown below)

FROM MAIN MENU PRESS '6' (OUTPUTS), THEN '1' (OUTPUT ASSIGNMENTS). PRESS '+' UNTIL OUTPUT #35 (PIN 37) IS REACHED.

```
PAGE:1  C1 PIN:37  NOT ENABLED
OUTPUT ASSIGNMENT #.................35
FREQUENCY (0=DEFAULT) (0-25.5 HZ)...1.0
DUTY CYCLE (0=DEFAULT) (0 - 100%)...50
MODE (0=SOLID,1=FLASH).............1
SELECT ASSIGNMENT:
NOT ENABLED.........................Y
VEHICLE PHASE.......................
PEDESTRIAN PHASE....................
VEHICLE OVERLAP.....................
PEDESTRIAN OVERLAP..................
WATCHDOG............................
DETECTOR RESET......................
ADVANCE BEACON......................Y
OUT OF PHASE FLASHER................
CONTROLLER FLASH....................
RUN FREE............................
RESERVED............................
PREEMPT.............................
SOFT PREEMPT........................
ANY PREEMPT.........................
COORDINATION PLAN...................
OFFSET..............................
PHASE CHECK.........................
PHASE ON............................
PHASE NEXT..........................
```

THE FIRST THREE PROGRAMMING ROWS DEFINE THE OUTPUT TO FLASH, ALONG WITH THE RATE AT WHICH IT WILL FLASH.

THE NOT ENABLED 'Y' WILL REMAIN UNTIL THE FUNCTION OF THIS OUTPUT IS CHANGED. DO NOT ENTER AN 'N'.

```
PAGE:1  C1 PIN:37  NOT ENABLED
SELECT BEACON INDEX (1-4)..........2
```

WHEN A 'Y' IS ENTERED FOR 'ADVANCE BEACON' THE SCREEN SHOWN ABOVE WILL APPEAR. ENTER DATA AS SHOWN.

PRESS THE 'ENT' KEY AFTER ENTERING DATA, THEN 'ESC'.

DISPLAY WILL NOW SHOW THE SPECIFIED OUTPUT ASSIGNED AS 'ADVANCE BEACON' AS SHOWN BELOW.

```
PAGE:1  C1 PIN:37  ADVANCE BEACON
OUTPUT ASSIGNMENT #.................35
FREQUENCY (0=DEFAULT) (0-25.5 HZ)...1.0
DUTY CYCLE (0=DEFAULT) (0 - 100%)...50
MODE (0=SOLID,1=FLASH).............1
SELECT ASSIGNMENT:
NOT ENABLED.........................
VEHICLE PHASE.......................
PEDESTRIAN PHASE....................
VEHICLE OVERLAP.....................
PEDESTRIAN OVERLAP..................
WATCHDOG............................
DETECTOR RESET......................
ADVANCE BEACON......................Y
OUT OF PHASE FLASHER................
CONTROLLER FLASH....................
RUN FREE............................
RESERVED............................
PREEMPT.............................
SOFT PREEMPT........................
ANY PREEMPT.........................
COORDINATION PLAN...................
OFFSET..............................
PHASE CHECK.........................
PHASE ON............................
PHASE NEXT..........................
```

FROM MAIN MENU PRESS '6' (OUTPUTS), THEN '1' (OUTPUT ASSIGNMENTS). PRESS '+' UNTIL OUTPUT #36 (PIN 38) IS REACHED.

```
PAGE:1  C1 PIN:38  NOT ENABLED
OUTPUT ASSIGNMENT #.................36
FREQUENCY (0=DEFAULT) (0-25.5 HZ)...0.0
DUTY CYCLE (0=DEFAULT) (0 - 100%)...0
MODE (0=SOLID,1=FLASH).............0
SELECT ASSIGNMENT:
NOT ENABLED.........................Y
VEHICLE PHASE.......................
PEDESTRIAN PHASE....................
VEHICLE OVERLAP.....................
PEDESTRIAN OVERLAP..................
WATCHDOG............................
DETECTOR RESET......................
ADVANCE BEACON......................
OUT OF PHASE FLASHER................Y
CONTROLLER FLASH....................
RUN FREE............................
RESERVED............................
PREEMPT.............................
SOFT PREEMPT........................
ANY PREEMPT.........................
COORDINATION PLAN...................
OFFSET..............................
PHASE CHECK.........................
PHASE ON............................
PHASE NEXT..........................
```

THE NOT ENABLED 'Y' WILL REMAIN UNTIL THE FUNCTION OF THIS OUTPUT IS CHANGED. DO NOT ENTER AN 'N'.

```
PAGE:1  C1 PIN:38  NOT ENABLED
SELECT OUTPUT ASSIGNMENT (1-64).....35
```

WHEN A 'Y' IS ENTERED FOR 'OUT OF PHASE FLASHER' THE SCREEN SHOWN ABOVE WILL APPEAR. ENTER DATA AS SHOWN.

PRESS THE 'ENT' KEY AFTER ENTERING DATA, THEN 'ESC'.

DISPLAY WILL NOW SHOW THE SPECIFIED OUTPUT ASSIGNED AS 'OUT OF PHASE FLASHER' AS SHOWN BELOW.

```
PAGE:1  C1 PIN:38  OUT OF PHASE FLASHER
OUTPUT ASSIGNMENT #.................36
FREQUENCY (0=DEFAULT) (0-25.5 HZ)...0.0
DUTY CYCLE (0=DEFAULT) (0 - 100%)...0
MODE (0=SOLID,1=FLASH).............0
SELECT ASSIGNMENT:
NOT ENABLED.........................
VEHICLE PHASE.......................
PEDESTRIAN PHASE....................
VEHICLE OVERLAP.....................
PEDESTRIAN OVERLAP..................
WATCHDOG............................
DETECTOR RESET......................
ADVANCE BEACON......................
OUT OF PHASE FLASHER................Y
CONTROLLER FLASH....................
RUN FREE............................
RESERVED............................
PREEMPT.............................
SOFT PREEMPT........................
ANY PREEMPT.........................
COORDINATION PLAN...................
OFFSET..............................
PHASE CHECK.........................
PHASE ON............................
PHASE NEXT..........................
```

OUTPUT REFERENCE SCHEDULE

OUTPUT 35 = Ø 4 Ped Yellow
OUTPUT 36 = Ø 8 Ped Yellow

ADVANCE BEACON PROGRAMMING DETAIL

(program controller as shown below)

1. FROM MAIN MENU PRESS '6' (OUTPUTS), THEN '2' (OUTPUT BEACON SETTINGS).

```
                OUTPUT BEACON SETTINGS
TRIGGER PHASES:  |12345678910111213141516
BEACON #1 OFF    |
BEACON #2 OFF    |      X
BEACON #3 OFF    |
BEACON #4 OFF    |
                 BEACON  |   1   2   3   4
OFF DELAY TIME (0-255)|   0   0   0   0
ON DELAY TIME  (0-255)|   0   0   0   0
STOP-TIME HOLD (0-255)|   0   3   0   0   <- NOTICE STOP TIME HOLD
                ADVANCE BEACON PROGRAMMING COMPLETE
```

SCROLL DOWN TO VIEW ALL DATA

NOTE: AN OUTPUT HAS TO BE ASSIGNED AS AN ADVANCE BEACON IN ORDER FOR PROPER OPERATION TO OCCUR. SEE OUTPUT ASSIGNMENT DETAIL ON THIS SHEET.

ADVANCE BEACON WIRING DETAIL

(wire flashers as shown below)

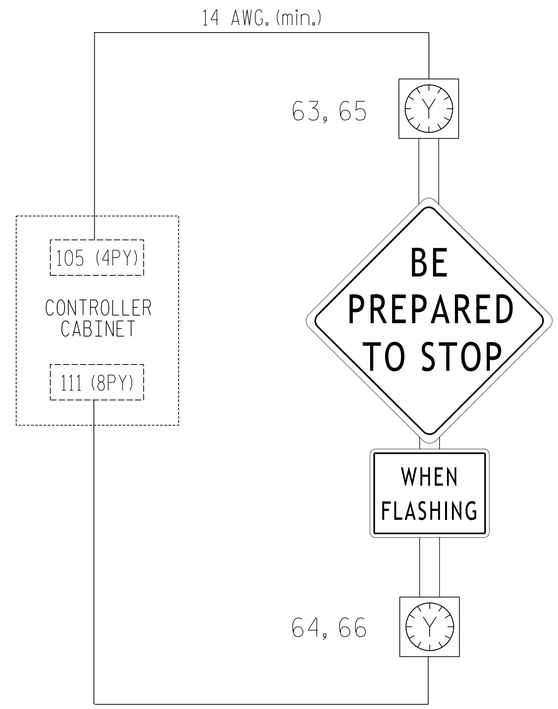

IMPORTANT

1. REMOVE, TAPE AND LABEL CONFLICT MONITOR WIRE ATTACHED TO THE REAR OF TERMINAL 105 (4PY) AND TERMINAL 111 (8PY).
2. INSERT LOADSWITCH FOR S6 AND S12.
3. MAKE SURE LOAD RESISTORS ARE IN PLACE AS SHOWN IN LOAD RESISTOR INSTALLATION DETAIL ON SHEET 1.
4. TO ACTIVATE SIGN OPERATION AS INDICATED ON THE SIGNAL PLANS, RE-ASSIGN OUTPUT 35 AND 36 AS SHOWN ON THIS SHEET.

THIS ELECTRICAL DETAIL IS FOR THE SIGNAL DESIGN: 03-1119
DESIGNED: November 2021
SEALED: November 19, 2021
REVISED:

ELECTRICAL DETAIL SHEET 5 OF 8

DOCUMENT NOT CONSIDERED FINAL UNLESS ALL SIGNATURES COMPLETED

RK&K
P: (919) 878-9560
8601 Six Forks Road Suite 700 | Raleigh, North Carolina 27615-2965
NC License No. F-0112
Engineers | Construction Managers | Planners | Scientists
www.rkk.com
Responsive People | Creative Solutions

ELECTRICAL AND PROGRAMMING DETAILS FOR:

Prepared for the Offices of:
NC Department of Transportation – Mobility and Safety Division – Traffic Engineering Branch – Signals Management Section
750 N.Greenfield Pkwy.Garner,NC 27529

US 17 (OCEAN HIGHWAY)
AT THOMASBORO ROAD
NB U-TURN

Division 3 | Brunswick County | Calabash

PLAN DATE:	November 2021	REVIEWED BY:	J O Deaton
PREPARED BY:	M W Yalch	REVIEWED BY:	

REVISIONS	INIT.	DATE

SEAL
NORTH CAROLINA PROFESSIONAL SEAL 07438 ENGINEER JAMES O. DEATON

DocuSigned by: JAMES O. Deaton 11/19/2021
SIGNATURE DATE

SIG. INVENTORY NO. 03-1119

11/19/2021
R:\Traffic\Signals\Design\Signals\Electrical Details\W-5601GA_SIG_03-1119s.dgn
dsears

PROJECT REFERENCE NO.	SHEET NO.
W-5601GA	Sig. 5.6

INPUT PAGE 2 ASSIGNMENT PROGRAMMING DETAIL FOR ALTERNATE PHASING - LOOP 3A

(program controller as shown below)

NOTES: 1. THIS PROGRAMMING APPLIES FOR INPUT PAGE 2 ONLY. INPUT PAGE 1 WILL USE STANDARD DEFAULT SETTINGS. THIS PROGRAMMING IS NECESSARY FOR PROPER DETECTOR OPERATION DURING ALTERNATE PHASING OPERATION.

2. THE PROGRAMMING BELOW REASSIGNS DETECTOR 53 TO INPUT #3 SO THAT THE DELAY ON LOOP 3A CAN BE REDUCED FROM 15 SECONDS TO 0 SECONDS.

FROM MAIN MENU PRESS '5' (INPUTS). THEN PRESS 'NEXT' TO GET TO INPUT PAGE '2'. PRESS THE '+' KEY UNTIL INPUT 3 IS REACHED.

```
PAGE: 2 C1 PIN:41  VEHICLE DETECTOR
INPUT ASSIGNMENT #.................3
DEBOUNCE TIME (0-25.5 SEC).........0.5
DELAY TIME (0-25.5 SEC)............0.0
HOLD-OVER TIME (0-25.5 SEC).........0.0
ASSIGNMENT SELECTION:
NOT ENABLED (Y/N)..................._
VEHICLE DETECTOR (1-64).............4
PEDESTRIAN DETECTOR (1-16).........._
ALTERNATE PED DETECTOR (1-16)......._
PREEMPT (1-10)......................._
INVERTED PREEMPT (1-10)............._
STOP TIME (Y/N).....................
FLASH SENSE (Y/N)...................._
DOOR OPEN (Y/N).....................
MANUAL CONTROL ENABLE (Y/N).........
MANUAL CONTROL ADVANCE (Y/N)........_
SPECIAL FUNCTION ALARM (1-8)........
TOD HOUR SYCHRONIZATION (0-23)......_
FORCE OFF RING (1-4)................._
HOLD PHASES (1-16)..................._
PLAN (65=FLSH,66=FREE)..._  OFFSET#.._
CHANGE PHASE SEQUENCE PAGE (1-12)...._
CHANGE PHASE TIMING PAGE (1-4)......_
CHANGE PHASE CONTROL PAGE (1-4).....
CHANGE OVERLAP CONTROL PAGE (1-4)...._
CHANGE INPUT PAGE (1-4).............._
CHANGE OUTPUT PAGE (1-4)............._
OVERRIDE PHASE CONTROL FUNCTION (Y)._
```

ENTER '53' TO REASSIGN THE VEHICLE DETECTOR FOR THIS INPUT

(LOOP 3A - PHASE 3)

```
PAGE: 2 C1 PIN:41  VEHICLE DETECTOR
INPUT ASSIGNMENT #.................3
DEBOUNCE TIME (0-25.5 SEC).........0.5
DELAY TIME (0-25.5 SEC)............0.0
HOLD-OVER TIME (0-25.5 SEC).........0.0
ASSIGNMENT SELECTION:
NOT ENABLED (Y/N)..................._
VEHICLE DETECTOR (1-64).............53
PEDESTRIAN DETECTOR (1-16).........._
ALTERNATE PED DETECTOR (1-16)......._
PREEMPT (1-10)......................._
INVERTED PREEMPT (1-10)............._
STOP TIME (Y/N).....................
FLASH SENSE (Y/N)...................._
DOOR OPEN (Y/N).....................
MANUAL CONTROL ENABLE (Y/N).........
MANUAL CONTROL ADVANCE (Y/N)........_
SPECIAL FUNCTION ALARM (1-8)........
TOD HOUR SYCHRONIZATION (0-23)......_
FORCE OFF RING (1-4)................._
HOLD PHASES (1-16)..................._
PLAN (65=FLSH,66=FREE)..._  OFFSET#.._
CHANGE PHASE SEQUENCE PAGE (1-12)...._
CHANGE PHASE TIMING PAGE (1-4)......_
CHANGE PHASE CONTROL PAGE (1-4).....
CHANGE OVERLAP CONTROL PAGE (1-4)...._
CHANGE INPUT PAGE (1-4).............._
CHANGE OUTPUT PAGE (1-4)............._
OVERRIDE PHASE CONTROL FUNCTION (Y)._
```

PROGRAMMING COMPLETE

FROM MAIN MENU PRESS '7' (DETECTORS). THEN PRESS '1' FOR VEHICLE DETECTORS. PRESS THE '-' KEY TO GET TO VEHICLE DETECTOR #53.

```
VEHICLE DETECTOR #53  SETTINGS (+-,1-64)
SETTING:                          (Y/N)
ENABLE DETECTOR.....................N
ENABLE LOGGING......................N
ENABLE DIAGNOSTICS..................N
SPEED TRAP..........................N
CALL DETECTOR.......................Y
EXTENSION DETECTOR..................Y
MODE 2 STOP BAR.....................N
SWITCHING DETECTOR..................N
DUPLICATING DETECTOR................N
ENABLE FULL TIME DELAY..............N
IF FAILED, SET MIN RECALL?..........N
IF FAILED, SET MAX1 RECALL?.........N
IF FAILED, SET MAX2 RECALL?.........N
PHASE#          ¦12345678910111213141516
PHASES ASSIGNED ¦
SWITCH/DUPLICATE¦
LOOP SIZE (0-255 FT)................6
SPEED TRAP DISTANCE (0-255 FT)......0
STOP BAR TIME (0-255 SEC)...........0
STRETCH (0-25.5 SEC)................0.0
DELAY (0-255 SEC)...................0
MAX CALLS/MIN (0-255)...............255
MIN CALLS/DIAGNOSTIC PERIOD (0-255).0
MAX OCCUPANCY (0-100%)..............100
EXTENSION DISABLE TIME (0-255 SEC)..0
QUEUE MAX OCCUPANCY TIME (0-255)....0
QUEUE GAP RESET TIME (0-25.5).......0.0
PREEMPTION INDEX FOR QUEUE (0-10)...0
```

ENTER 'Y' FOR ENABLE DETECTOR

ENTER '3' FOR PHASES ASSIGNED

ENSURE DELAY IS '0'

```
VEHICLE DETECTOR #53  SETTINGS (+-,1-64)
SETTING:                          (Y/N)
ENABLE DETECTOR.....................Y
ENABLE LOGGING......................N
ENABLE DIAGNOSTICS..................N
SPEED TRAP..........................N
CALL DETECTOR.......................Y
EXTENSION DETECTOR..................Y
MODE 2 STOP BAR.....................N
SWITCHING DETECTOR..................N
DUPLICATING DETECTOR................N
ENABLE FULL TIME DELAY..............N
IF FAILED, SET MIN RECALL?..........N
IF FAILED, SET MAX1 RECALL?.........N
IF FAILED, SET MAX2 RECALL?.........N
PHASE#          ¦12345678910111213141516
PHASES ASSIGNED ¦  X
SWITCH/DUPLICATE¦
LOOP SIZE (0-255 FT)................6
SPEED TRAP DISTANCE (0-255 FT)......0
STOP BAR TIME (0-255 SEC)...........0
STRETCH (0-25.5 SEC)................0.0
DELAY (0-255 SEC)...................0
MAX CALLS/MIN (0-255)...............255
MIN CALLS/DIAGNOSTIC PERIOD (0-255).0
MAX OCCUPANCY (0-100%)..............100
EXTENSION DISABLE TIME (0-255 SEC)..0
QUEUE MAX OCCUPANCY TIME (0-255)....0
QUEUE GAP RESET TIME (0-25.5).......0.0
PREEMPTION INDEX FOR QUEUE (0-10)...0
```

DETECTOR PROGRAMMING COMPLETE

NOTE: DETECTOR IS PROGRAMMED PER THE INPUT FILE CONNECTION AND PROGRAMMING CHART SHOWN ON SHEET 1.

THIS ELECTRICAL DETAIL IS FOR THE SIGNAL DESIGN: 03-1119
DESIGNED: November 2021
SEALED: November 19, 2021
REVISED:

ELECTRICAL DETAIL SHEET 6 OF 8

DOCUMENT NOT CONSIDERED FINAL UNLESS ALL SIGNATURES COMPLETED

RK&K
P: (919) 878-9560
8601 Six Forks Road Suite 700 | Raleigh, North Carolina 27615-2965
NC License No. F-0112
Engineers | Construction Managers | Planners | Scientists
www.rkk.com
Responsive People | Creative Solutions

ELECTRICAL AND PROGRAMMING DETAILS FOR:

Prepared for the Offices of:
NC Department of Transportation Mobility and Safety Division Traffic Engineering Branch Signal Management Section
750 N.Greenfield Pkwy,Garner,NC 27529

US 17 (OCEAN HIGHWAY) AT THOMASBORO ROAD NB U-TURN

Division 3 | Brunswick County | Calabash

PLAN DATE:	November 2021	REVIEWED BY:	J O Deaton
PREPARED BY:	M W Yalch	REVIEWED BY:	

REVISIONS	INIT.	DATE

SEAL
NORTH CAROLINA PROFESSIONAL SEAL 07438 ENGINEER JAMES O. DEATON

DocuSigned by: JAMES O. Deaton 11/19/2021
SIGNATURE | DATE

SIG. INVENTORY NO. 03-1119

11/19/2021
R:\Traffic\Signals\Design\Signals\Electrical Details\W-5601GA_SIG_03-1119a.dgn
dsears

PROJECT REFERENCE NO.	SHEET NO.
W-5601GA	Sig. 5.7

INPUT PAGE 2 ASSIGNMENT PROGRAMMING DETAIL FOR ALTERNATE PHASING - LOOP 3B

(program controller as shown below)

NOTES: 1. THIS PROGRAMMING APPLIES FOR INPUT PAGE 2 ONLY. INPUT PAGE 1 WILL USE STANDARD DEFAULT SETTINGS. THIS PROGRAMMING IS NECESSARY FOR PROPER DETECTOR OPERATION DURING ALTERNATE PHASING OPERATION.

2. THE PROGRAMMING BELOW REASSIGNS DETECTOR 54 TO INPUT #7 SO THAT THE DELAY ON LOOP 3B CAN BE REDUCED FROM 15 SECONDS TO 0 SECONDS.

FROM MAIN MENU PRESS '5' (INPUTS), THEN PRESS 'NEXT' TO GET TO INPUT PAGE '2'. PRESS THE '+' KEY UNTIL INPUT 7 IS REACHED.

```
PAGE: 2 C1 PIN:45  VEHICLE DETECTOR
INPUT ASSIGNMENT #.................7
DEBOUNCE TIME (0-25.5 SEC).........0.5
DELAY TIME (0-25.5 SEC).............0.0
HOLD-OVER TIME (0-25.5 SEC).........0.0
ASSIGNMENT SELECTION:
NOT ENABLED (Y/N)..................._
VEHICLE DETECTOR (1-64).............14
PEDESTRIAN DETECTOR (1-16).........._
ALTERNATE PED DETECTOR (1-16)......._
PREEMPT (1-10)......................._
INVERTED PREEMPT (1-10)............._
STOP TIME (Y/N).....................N
FLASH SENSE (Y/N)...................N
DOOR OPEN (Y/N).....................N
MANUAL CONTROL ENABLE (Y/N).........N
MANUAL CONTROL ADVANCE (Y/N)........N
SPECIAL FUNCTION ALARM (1-8)........0
TOD HOUR SYCHRONIZATION (0-23)......0
FORCE OFF RING (1-4)................0
HOLD PHASES (1-16)..................0
PLAN (65=FLSH,66=FREE)..  OFFSET#..0
CHANGE PHASE SEQUENCE PAGE (1-12)...1
CHANGE PHASE TIMING PAGE (1-4)......1
CHANGE PHASE CONTROL PAGE (1-4).....1
CHANGE OVERLAP CONTROL PAGE (1-4)...1
CHANGE INPUT PAGE (1-4).............1
CHANGE OUTPUT PAGE (1-4)............1
OVERRIDE PHASE CONTROL FUNCTION (Y).N
```

ENTER '54' TO REASSIGN THE VEHICLE DETECTOR FOR THIS INPUT

(LOOP 3B - PHASE 3)

```
PAGE: 2 C1 PIN:45  VEHICLE DETECTOR
INPUT ASSIGNMENT #.................7
DEBOUNCE TIME (0-25.5 SEC).........0.5
DELAY TIME (0-25.5 SEC).............0.0
HOLD-OVER TIME (0-25.5 SEC).........0.0
ASSIGNMENT SELECTION:
NOT ENABLED (Y/N)..................._
VEHICLE DETECTOR (1-64).............54
PEDESTRIAN DETECTOR (1-16).........._
ALTERNATE PED DETECTOR (1-16)......._
PREEMPT (1-10)......................._
INVERTED PREEMPT (1-10)............._
STOP TIME (Y/N).....................N
FLASH SENSE (Y/N)...................N
DOOR OPEN (Y/N).....................N
MANUAL CONTROL ENABLE (Y/N).........N
MANUAL CONTROL ADVANCE (Y/N)........N
SPECIAL FUNCTION ALARM (1-8)........0
TOD HOUR SYCHRONIZATION (0-23)......0
FORCE OFF RING (1-4)................0
HOLD PHASES (1-16)..................0
PLAN (65=FLSH,66=FREE)..  OFFSET#..0
CHANGE PHASE SEQUENCE PAGE (1-12)...1
CHANGE PHASE TIMING PAGE (1-4)......1
CHANGE PHASE CONTROL PAGE (1-4).....1
CHANGE OVERLAP CONTROL PAGE (1-4)...1
CHANGE INPUT PAGE (1-4).............1
CHANGE OUTPUT PAGE (1-4)............1
OVERRIDE PHASE CONTROL FUNCTION (Y).N
```

PROGRAMMING COMPLETE

FROM MAIN MENU PRESS '7' (DETECTORS), THEN PRESS '1' FOR VEHICLE DETECTORS. PRESS THE '-' KEY TO GET TO VEHICLE DETECTOR #54.

```
VEHICLE DETECTOR #54  SETTINGS (+-,1-64)
SETTING:                           (Y/N)
ENABLE DETECTOR.....................N
ENABLE LOGGING......................N
ENABLE DIAGNOSTICS..................N
SPEED TRAP..........................N
CALL DETECTOR.......................Y
EXTENSION DETECTOR..................Y
MODE 2 STOP BAR.....................N
SWITCHING DETECTOR..................N
DUPLICATING DETECTOR................N
ENABLE FULL TIME DELAY..............N
IF FAILED, SET MIN RECALL?..........N
IF FAILED, SET MAX1 RECALL?.........N
IF FAILED, SET MAX2 RECALL?.........N
PHASE#          ¦12345678910111213141516
PHASES ASSIGNED ¦
SWITCH/DUPLICATE¦
LOOP SIZE (0-255 FT)................6
SPEED TRAP DISTANCE (0-255 FT)......0
STOP BAR TIME (0-255 SEC)...........0
STRETCH (0-25.5 SEC)................0.0
DELAY (0-255 SEC)...................0
MAX CALLS/MIN (0-255)...............255
MIN CALLS/DIAGNOSTIC PERIOD (0-255).0
MAX OCCUPANCY (0-100%)..............100
EXTENSION DISABLE TIME (0-255 SEC)..0
QUEUE MAX OCCUPANCY TIME (0-255)....0
QUEUE GAP RESET TIME (0-25.5).......0.0
PREEMPTION INDEX FOR QUEUE (0-10)...0
```

ENTER 'Y' FOR ENABLE DETECTOR

ENTER '3' FOR PHASES ASSIGNED

ENSURE DELAY IS '0'

```
VEHICLE DETECTOR #54  SETTINGS (+-,1-64)
SETTING:                           (Y/N)
ENABLE DETECTOR.....................Y
ENABLE LOGGING......................N
ENABLE DIAGNOSTICS..................N
SPEED TRAP..........................N
CALL DETECTOR.......................Y
EXTENSION DETECTOR..................Y
MODE 2 STOP BAR.....................N
SWITCHING DETECTOR..................N
DUPLICATING DETECTOR................N
ENABLE FULL TIME DELAY..............N
IF FAILED, SET MIN RECALL?..........N
IF FAILED, SET MAX1 RECALL?.........N
IF FAILED, SET MAX2 RECALL?.........N
PHASE#          ¦12345678910111213141516
PHASES ASSIGNED ¦  X
SWITCH/DUPLICATE¦
LOOP SIZE (0-255 FT)................6
SPEED TRAP DISTANCE (0-255 FT)......0
STOP BAR TIME (0-255 SEC)...........0
STRETCH (0-25.5 SEC)................0.0
DELAY (0-255 SEC)...................0
MAX CALLS/MIN (0-255)...............255
MIN CALLS/DIAGNOSTIC PERIOD (0-255).0
MAX OCCUPANCY (0-100%)..............100
EXTENSION DISABLE TIME (0-255 SEC)..0
QUEUE MAX OCCUPANCY TIME (0-255)....0
QUEUE GAP RESET TIME (0-25.5).......0.0
PREEMPTION INDEX FOR QUEUE (0-10)...0
```

DETECTOR PROGRAMMING COMPLETE

NOTE: DETECTOR IS PROGRAMMED PER THE INPUT FILE CONNECTION AND PROGRAMMING CHART SHOWN ON SHEET 1.

THIS ELECTRICAL DETAIL IS FOR THE SIGNAL DESIGN: 03-1119
DESIGNED: November 2021
SEALED: November 19, 2021
REVISED:

ELECTRICAL DETAIL SHEET 7 OF 8

DOCUMENT NOT CONSIDERED FINAL UNLESS ALL SIGNATURES COMPLETED

RK&K
P: (919) 878-9560
8601 Six Forks Road Suite 700 | Raleigh, North Carolina 27615-2965
NC License No. F-0112
Engineers | Construction Managers | Planners | Scientists
www.rkk.com
Responsive People | Creative Solutions

ELECTRICAL AND PROGRAMMING DETAILS FOR:

Prepared for the Offices of:
NC Department of Transportation Mobility and Safety Division Traffic Engineering Branch Signals Management Section
750 N.Greenfield Pkwy,Garner,NC 27529

US 17 (OCEAN HIGHWAY) AT THOMASBORO ROAD NB U-TURN

Division 3 | Brunswick County | Calabash

PLAN DATE: November 2021 | REVIEWED BY: J O Deaton
PREPARED BY: M W Yalch | REVIEWED BY:

REVISIONS	INIT.	DATE

SEAL
NORTH CAROLINA PROFESSIONAL SEAL 07438 ENGINEER JAMES O. DEATON

DocuSigned by: JAMES O. Deaton 11/19/2021
4DE8A2A9B9DE...
SIGNATURE | DATE

SIG. INVENTORY NO. 03-1119

11/19/2021
R:\Traffic\Signals\Design\Signals\Electrical Details\W-5601GA_SIG_03-1119a.dgn
dsears

PROJECT REFERENCE NO.	SHEET NO.
W-5601GA	Sig. 5.8

ALTERNATE PHASING ACTIVATION DETAIL

TO RUN ALT. PHASING DURING COORDINATION - SELECT ALL PAGE CHANGES (AS SHOWN BELOW) WITHIN COORDINATION PLAN PROGRAMMING.

TO RUN ALT. PHASING DURING FREE RUN - PROGRAM PAGE CHANGES (SHOWN BELOW) IN SEPARATE TIME OF DAY EVENTS. IF PAGE 1 IS USED, NO EVENT PROGRAMMING IS NECESSARY FOR THAT PARTICULAR PAGE.

PHASING	INPUTS PAGE	OVERLAPS PAGE
ACTIVE PAGES REQUIRED TO RUN NORMAL PHASING	1	1
ACTIVE PAGES REQUIRED TO RUN ALTERNATE PHASING	2	2

NOTE: PAGES NOT SHOWN (i.e. sequence, phase control, etc.) SHOULD REMAIN AS '1', OR AS DEFINED BY TIMING ENGINEER.

IMPORTANT: IF ALT. PHASING IS USED DURING FREE RUN AND COORDINATION, DO NOT OPERATE TIME OF DAY PAGE CHANGE EVENTS CONCURRENTLY WITH COORDINATION PLAN EVENTS IN THE EVENT SCHEDULER. (EX. FREE RUN PAGE CHANGE EVENT SHOULD END BEFORE COORDINATION PLAN EVENT STARTS AND VICE-VERSA).

ALTERNATE PHASING PAGE CHANGE SUMMARY

THE FOLLOWING IS A SUMMARY OF WHAT TAKES PLACE WHEN THESE OUTPUT/INPUT PAGE CHANGES ACTIVATE TO CALL THE "ALTERNATE PHASING":

OVERLAPS PAGE 2: Modifies overlap parent phases for heads 31 and 32 to run protected turns only.

INPUTS PAGE 2: Reduces delay time for phase 3 call on loops 3A and 3B to 0 seconds.

OUTPUT ASSIGNMENT PROGRAMMING DETAIL TO REMAP LOADSWITCH S1 TO PHASE 3

(program controller as shown below)

CHANGING OUTPUT ASSIGNMENTS

1. FROM MAIN MENU SELECT '6' (OUTPUTS), THEN '1' (OUTPUT ASSIGNMENTS)
2. ENTER 14 (PHASE 1 RED) FOR OUTPUT ASSIGNMENT #.
3. SCROLL DOWN TO 'VEHICLE PHASE' AND ENTER 'Y' REGARDLESS OF DEFAULT PROGRAMMING
4. ENTER '3' FOR 'SELECT VEHICLE PHASE'. NO CHANGE NEEDED FOR 'SELECT COLOR'
5. BACKUP TO 'OUTPUT ASSIGNMENTS AND SETTINGS MENU:' BY PRESSING THE 'ESC' BUTTON ON KEYBOARD.
6. SELECT '1' (OUTPUT ASSIGNMENTS)
7. ENTER 15 (PHASE 1 YELLOW) FOR OUTPUT ASSIGNMENT #.
8. REPEAT STEPS # 3 AND # 4.
9. ENTER 16 (PHASE 1 GREEN) FOR OUTPUT ASSIGNMENT #.
10. REPEAT STEPS # 3 AND # 4.

PROGRAMMING COMPLETE

THIS ELECTRICAL DETAIL IS FOR
THE SIGNAL DESIGN: 03-1119
DESIGNED: November 2021
SEALED: November 19, 2021
REVISED:

ELECTRICAL DETAIL SHEET 8 OF 8

DOCUMENT NOT CONSIDERED FINAL UNLESS ALL SIGNATURES COMPLETED

RK&K
P: (919) 878-9560
8601 Six Forks Road Suite 700 | Raleigh, North Carolina 27615-2965
NC License No. F-0112
Engineers | Construction Managers | Planners | Scientists
www.rkk.com
Responsive People | Creative Solutions

ELECTRICAL AND PROGRAMMING DETAILS FOR:

Prepared for the Offices of:
NC Department of Transportation Mobility and Safety Division Traffic Engineering Branch Signals Management Section
750 N.Greenfield Pkwy,Garner,NC 27529

US 17 (OCEAN HIGHWAY)
AT THOMASBORO ROAD
NB U-TURN

Division 3 | Brunswick County | Calabash

PLAN DATE: November 2021	REVIEWED BY: J O Deaton
PREPARED BY: M W Yalch	REVIEWED BY:

REVISIONS	INIT.	DATE

SEAL
NORTH CAROLINA PROFESSIONAL SEAL 07438 ENGINEER JAMES O. DEATON

DocuSigned by: JAMES O. Deaton 11/19/2021
SIGNATURE DATE

SIG. INVENTORY NO. 03-1119

11/19/2021
R:\Traffic\Signals\Design\Signals\Electrical Details\W-5601GA_SIG_03-1119e.dgn
dsears

Design Loading for METAL POLE NO. 4

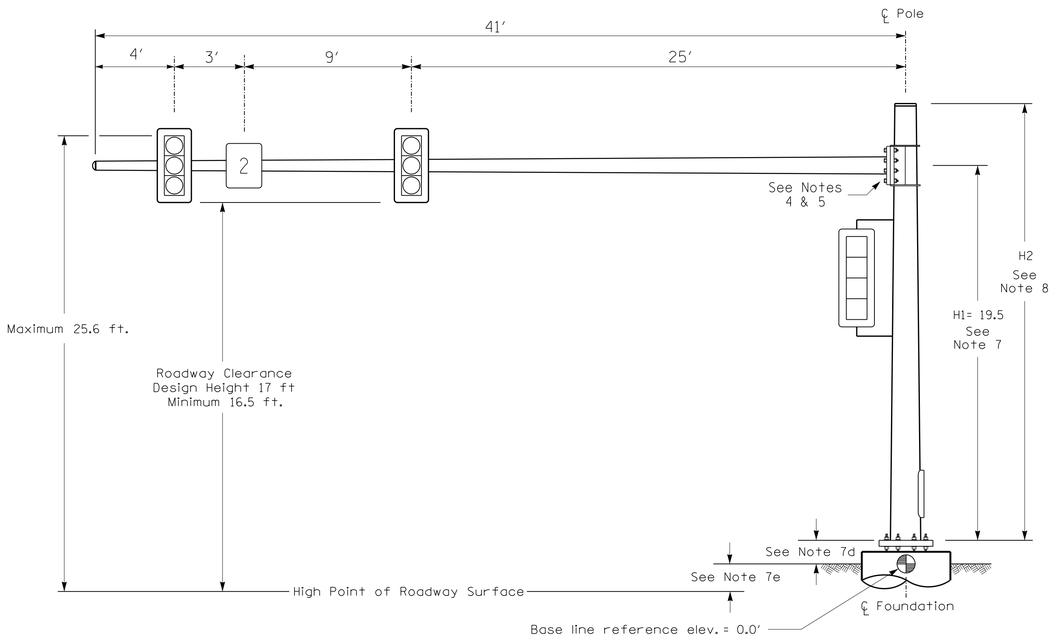

Elevation View

SPECIAL NOTE

The contractor is responsible for verifying that the mast arm attachment height (H1) will provide the "Design Height" clearance from the roadway before submitting final shop drawings for approval. Verify elevation data below which was obtained by field measurement or from available project survey data.

Elevation Data for Mast Arm Attachment (H1)

Elevation Differences for:	Pole 4	
Baseline reference point at ⊕ Foundation @ ground level	0.0 ft.	
Elevation difference at High point of roadway surface	+ 0.90 ft.	
Elevation difference at Edge of travelway or face of curb	+ 0.70 ft.	

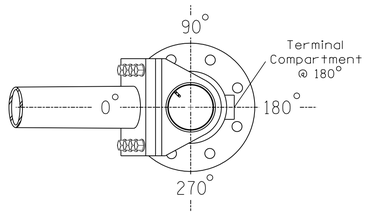

POLE RADIAL ORIENTATION

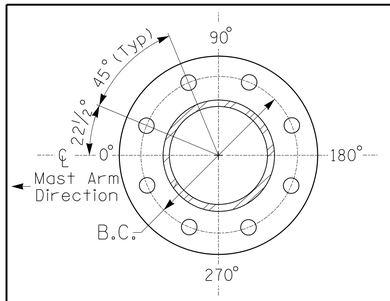

8 BOLT BASE PLATE DETAIL

See Note 6

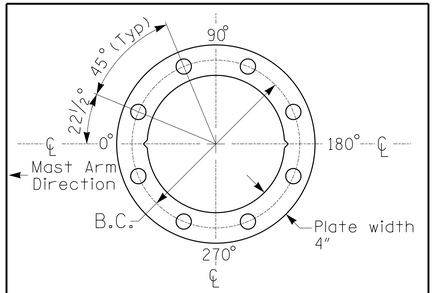

BASE PLATE TEMPLATE & ANCHOR BOLT LOCK PLATE DETAIL
For 8 Bolt Base Plate

METAL POLE No. 4

PROJECT REFERENCE NO.	SHEET NO.
W-5601GA	SIG. 5.9

MAST ARM LOADING SCHEDULE

LOADING SYMBOL	DESCRIPTION	AREA	SIZE	WEIGHT
	RIGID MOUNTED SIGNAL HEAD 12″-3 SECTION-WITH BACKPLATE	9.3 S.F.	25.5″ W X 52.5″L	60 LBS
	RIGID MOUNTED SIGNAL HEAD 12″-4 SECTION-WITH BACKPLATE	11.5 S.F.	25.5″ W X 66.0″L	74 LBS
2	SIGN RIGID MOUNTED	9.0 S.F.	36.0″ W X 36.0″L	17 LBS

NOTES

DESIGN REFERENCE MATERIAL

1. Design the traffic signal structure and foundation in accordance with:
   - The 6th Edition 2013 AASHTO "Standard Specifications for Structural Supports for Highway Signs, Luminaires, and Traffic Signals, including all of the latest interim revisions.
   - The 2018 NCDOT "Standard Specifications for Roads and Structures." The latest addenda to the specifications can be found in the traffic signal project special provisions.
   - The 2018 NCDOT Roadway Standard Drawings.
   - The traffic signal project plans and special provisions.
   - The NCDOT "Metal Pole Standards" located at the following NCDOT website: https://connect.ncdot.gov/resources/safety/Pages/ITS-Design-Resources.aspx

DESIGN REQUIREMENTS

2. Design the traffic signal structure using the loading conditions shown in the elevation views. These are anticipated worst case "design loads" and may not represent the actual loads that will be applied at the time of the installation. The contractor should refer to the traffic signal plans for the actual loads that will be applied at the time of the installation.
3. Design all signal supports using stress ratios that do not exceed 0.9.
4. The camber design for the mast arm deflection should provide an appearance of a low pitched arch where the tip or the free end of the mast arm does not deflect below horizontal when fully loaded.
5. A clamp-type bolted mast arm-to-pole connection may be used instead of the welded ring stiffened box connection shown as long as the connection meets all of the design requirements.
6. Design base plate with 8 anchor bolt holes. Provide 2 inch x 60 inch anchor bolts.
7. The mast arm attachment height (H1) shown is based on the following design assumptions:
   a. Mast arm slope and deflection are not considered in determining the arm attachment height as they are assumed to offset each other.
   b. Signal heads are rigidly mounted and vertically centered on the mast arm.
   c. The roadway clearance height for design is as shown in the elevation views.
   d. The top of the pole base plate is 0.75 feet above the ground elevation.
   e. Refer to the Elevation Data Chart for the elevation differences between the proposed foundation ground level and the high point of the roadway.
8. The pole manufacturer will determine the total height (H2) of each pole using the greater of the following:
   - Mast arm attachment height (H1) plus 2 feet, or
   - H1 plus 1/2 of the total height of the mast arm attachment assembly plus 1 foot.
9. If pole location adjustments are required, the contractor must gain approval from the Engineer as this may affect the mast arm lengths and arm attachment heights. The contractor may contact the Signal Design Section Senior Structural Engineer for assistance at (919) 814-5000.
10. The contractor is responsible for verifying that the mast arm length shown will allow proper positioning of the signal heads over the roadway.
11. The contractor is responsible for providing soil penetration testing data (SPT) to the pole manufacturer so site specific foundations can be designed.

NCDOT Wind Zone 2 (130 mph)

DOCUMENT NOT CONSIDERED FINAL UNLESS ALL SIGNATURES COMPLETED

RK&K
P: (919) 878-9560
8601 Six Forks Road Suite 700 | Raleigh, North Carolina 27615-2965
NC License No. F-0112
Engineers | Construction Managers | Planners | Scientists
www.rkk.com
Responsive People | Creative Solutions

Prepared for the Offices of:
Transportation Mobility and Safety Division
NORTH CAROLINA DEPARTMENT OF TRANSPORTATION
Signal Design Section
750 N.Greenfield Pkwy.Garner,NC 27529

US 17 (OCEAN HIGHWAY)
AT THOMASBORO ROAD
NB U-TURN

DIVISION 3 BRUNSWICK COUNTY CALABASH

PLAN DATE:	NOVEMBER 2021	REVIEWED BY:	C.B.HOLDEN
PREPARED BY:	D.T.SEARS	REVIEWED BY:	

SCALE 0 N/A N/A

REVISIONS	INIT.	DATE

SEAL
NORTH CAROLINA PROFESSIONAL SEAL 044558 ENGINEER DAVID T. SEARS

DocuSigned by: David T Sears 11/19/2021
060183F28E87415...
SIGNATURE DATE

SIG. INVENTORY NO. 03-1119

11/19/2021
By:dsears
P:\Traffic\Signals\Design\Mastarm Loading Diagrams\W5601GA_03-1119mp.dgn
dsears

DocuSign Envelope ID: 3AB00590-16A7-4DBF-945B-115C94D4A1AB

PROJECT I.D. NO.	SHEET NO.
W-5601GA	Sig.M1

STATE OF NORTH CAROLINA
DIVISION OF HIGHWAYS

STANDARD DRAWINGS FOR ALL METAL POLES

POLE STANDARDS

NCDOT METAL P

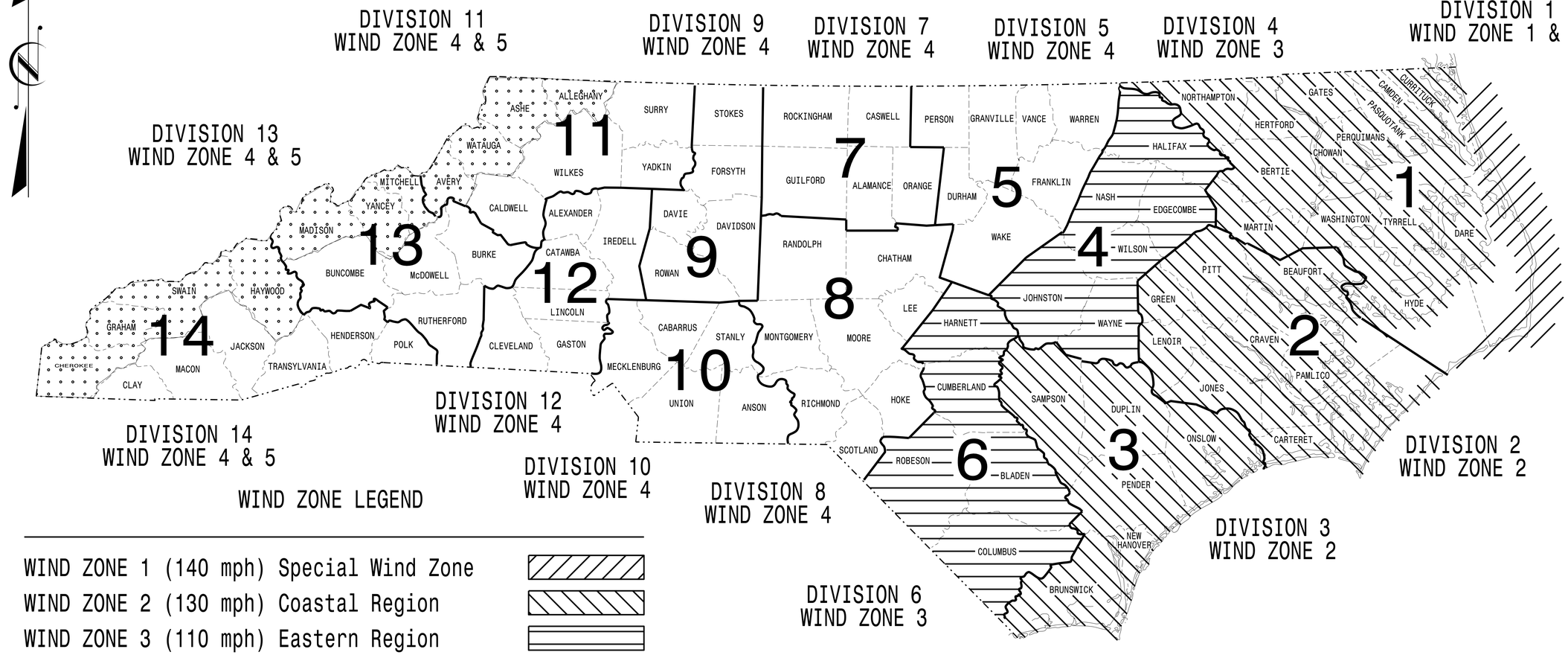

WIND ZONE LEGEND

WIND ZONE 1 (140 mph) Special Wind Zone	
WIND ZONE 2 (130 mph) Coastal Region	
WIND ZONE 3 (110 mph) Eastern Region	
WIND ZONE 4 (90 mph) Central & Mtn. Region	
WIND ZONE 5 (120 mph) Special Wind Zone	

https://connect.ncdot.gov/resources/safety/Pages/ITS-Design-Resources.aspx

Prepared In the Offices of:

Transportation Mobility and Safety Division
Signal Design Section
STATE OF NORTH CAROLINA · DEPARTMENT OF TRANSPORTATION

750 N.Greenfield Pkwy.
Garner,NC 27529

Designed in conformance with the latest 2015 Interim to the 6th Edition 2013

AASHTO

Standard Specifications for Structural Supports for Highway Signs, Luminaires, and Traffic Signals

INDEX OF PLANS

DRAWING NUMBER	DESCRIPTION
Sig. M 1	Statewide Wind Zone Map
Sig. M 2	Typical Fabrication Details–All Metal Poles
Sig. M 3	Typical Fabrication Details–Strain Poles
Sig. M 4	Typical Fabrication Details–Mast Arm Poles
Sig. M 5	Typical Fabrication Details–Mast Arm Connection
Sig. M 6	Typical Fabrication Details–Strain Pole Attachments
Sig. M 7	Construction Details–Foundations
Sig. M 8	Standard Strain Pole Foundation–All Soil Conditions

NCDOT CONTACTS:

MOBILITY AND SAFETY DIVISION – ITS AND SIGNALS UNIT

M.M. MCDIARMID, P.E. – STATE ITS AND SIGNALS ENGINEER

J. P. GALLOWAY, P.E. – STATE SIGNALS ENGINEER

D.C. SARKAR, P.E. – ITS AND SIGNALS SENIOR STRUCTURAL ENGINEER

SEAL

NORTH CAROLINA PROFESSIONAL SEAL 028094 ENGINEER DEBESH C. SARKAR

DocuSigned by: Debesh C. Sarkar 44E8E3... SIGNATURE

10/11/2017 DATE

DocuSign Envelope ID: 3AB00590-16A7-4DBF-945B-115C94D4A1AB

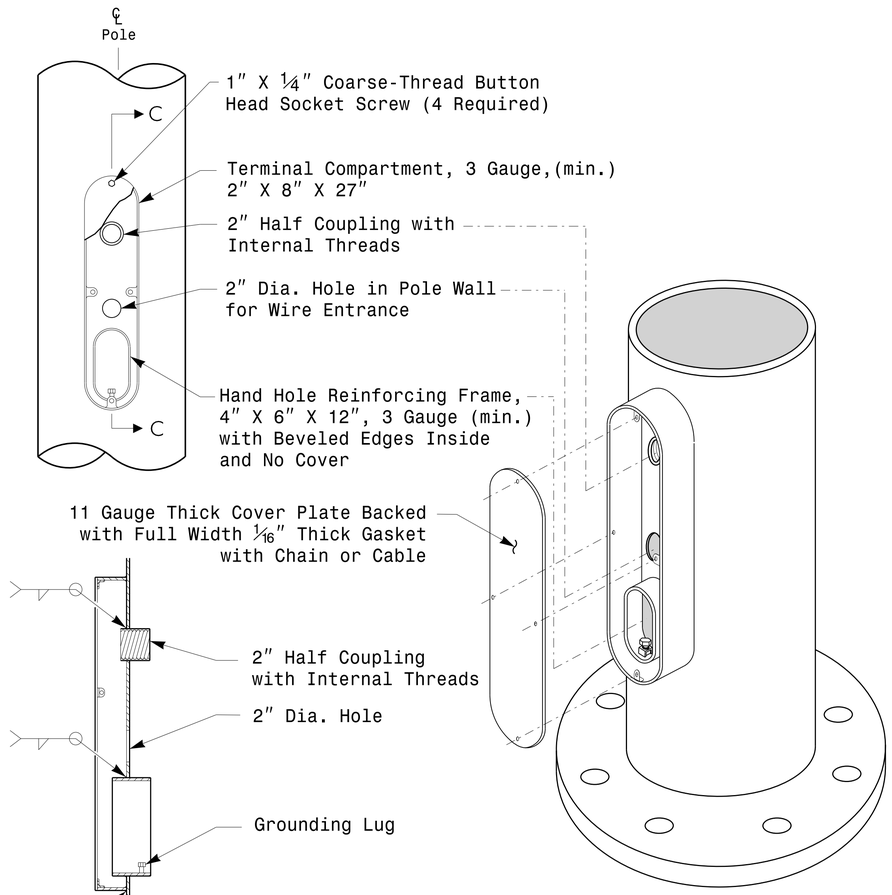

Section C-C

Note: Unless otherwise specified, locate Terminal Compartment 1 foot above the pole base plate at 180 degrees on the pole's radial index.

Terminal Compartment Detail

MFG _____ MFG. DATE: MM/YY
SHAFT D/T/L/Y ----/----/----/----
ARM-A D/T/L/Y ----/----/----/----
----/----/----/----
ARM-B D/T/L/Y ----/----/----/----
----/----/----/----
A.B. DIA./B.C./L/Y ----/----/----/----
NCDOT SIG. INV. NO. _ _ _ _ _ _ _ _
NCDOT POLE NO. _ _ _ _ _ _ _ _

Shaft I.D. Tag
(Provide on Shaft of Strain Poles and Mast Arm Poles Shaft)

MFG _____ MFG. DATE: MM/YY
SECTION D/T/L/Y ----/----/----/----
NCDOT SIG. INV. NO. _ _ _ _ _ _ _ _
NCDOT POLE NO. _ _ _ _ _ _ _ _

Arm I.D. Tag
(Provide on each section of a multi-section mast arm.)

Notes:
1) D= Diameter, T= Thickness, L= Length, Y= Yield Strength
2) A.B. = Anchor Bolt
3) B.C. = Bolt Circle of Anchor Bolts
4) If Custom Design, use "NCDOT STANDARD" line for Signal Inv. Number and pole I.D. number
5) See drawing M3 and M4 for mounting positions of I.D. tags.

Identification Tag Details

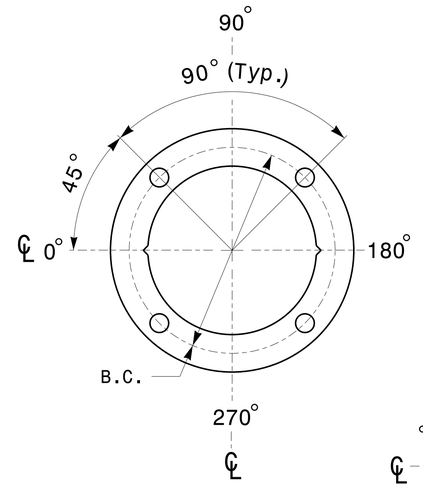

4 Bolt Pattern

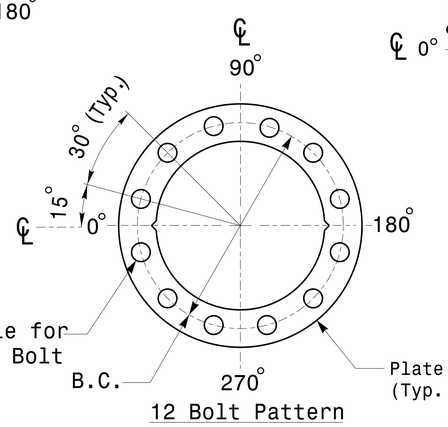

2¼"" dia. hole for 2"dia. Anchor Bolt

Plate Width = 4″ min. (Typ. for all plates)

12 Bolt Pattern

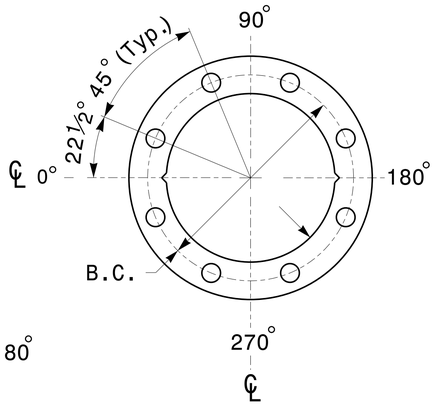

8 Bolt Pattern

Construct Templates and Plates from ¼″ min. thick Steel. Galvanizing is not required.

Base Plate Template and Anchor Bolt Lock Plate Details

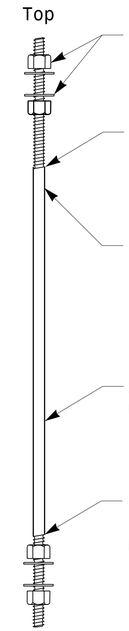

Anchor Bolt Detail

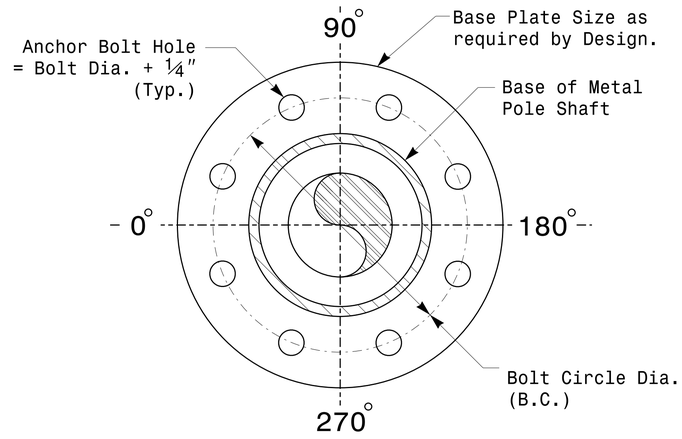

Note: Base plate may be circular,octagonal,square or rectangular in shape.

Typical Base Plate Detail

Fabrication Details – All Metal Poles

PROJECT ID. NO.	SHEET NO.
W-5601GA	Sig.M2

Prepared in the Offices of:
Transportation Mobility and Safety Division
STATE OF NORTH CAROLINA DEPARTMENT OF TRANSPORTATION
Signal Design Section
750 N.Greenfield Pkwy,Garner,NC 27529

SCALE 0 NA NONE

Typical Fabrication Details For All Metal Poles

PLAN DATE:	OCTOBER 2017	DESIGNED BY:	C.F.ANDREWS
PREPARED BY:	N. BITTING	REVIEWED BY:	D.C. SARKAR

REVISIONS	INIT.	DATE

SEAL
NORTH CAROLINA PROFESSIONAL SEAL 028094 ENGINEER DEBESH C. SARKAR

DocuSigned by: Debesh C. Sarkar 44EBE32B5B4C4...
SIGNATURE

10/11/2017
DATE

11-OCT-2017 08:30
S:\ITS&SU\ITS Signals\Signal Design Section\Eastern Region\MM Sheets\2016\2014 Sig.M2 Std. Fabrication Details-All Poles..dgn
rstrickler

DocuSign Envelope ID: 3AB00590-16A7-4DBF-945B-115C94D4A1AB

PROJECT ID. NO.	SHEET NO.
W-5601GA	Sig.M3

Details – Strain Poles

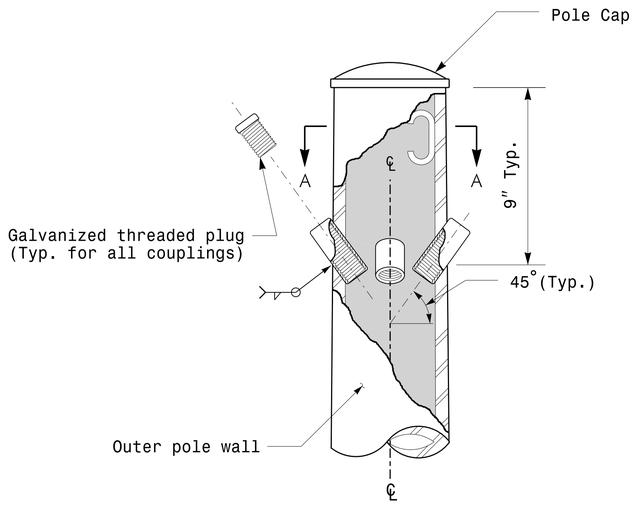

Cable Entrances at Top of Pole

Note:
1. Opening in pole base plate shall be equal to pole base inside diameter minus 3½" but shall not be less than 8½".

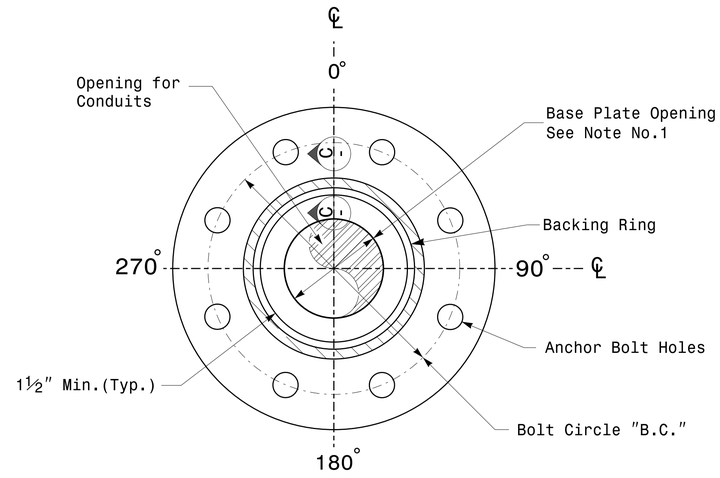

Section B-B

Pole Base Plate Details
(8 and 12 Bolt Pattern)

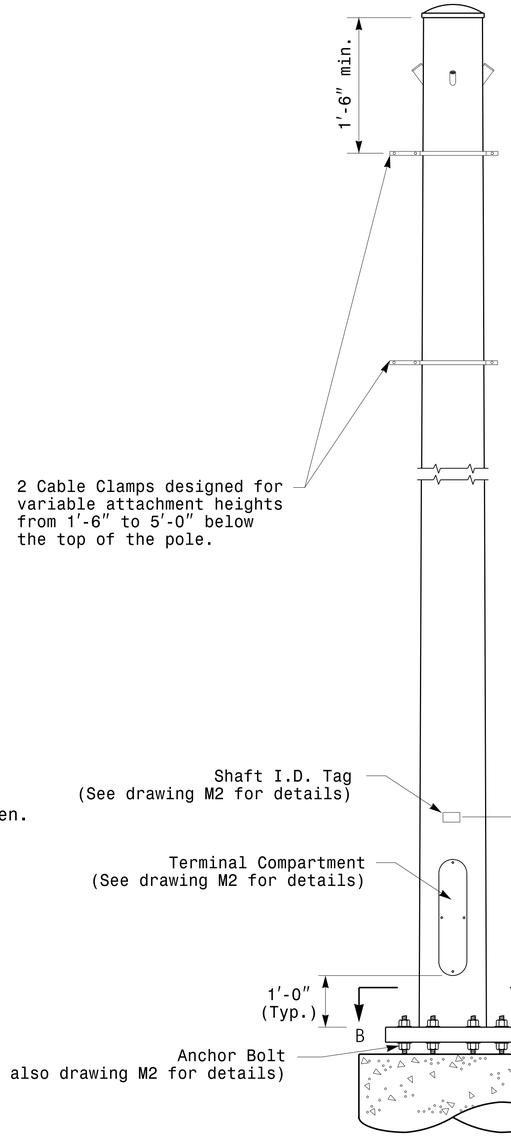

Monotube Strain Pole

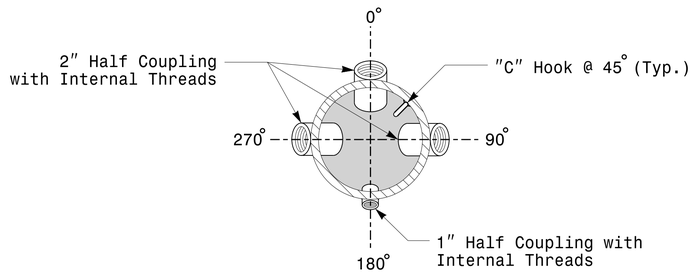

Section A-A

Radial Orientation for Factory Installed
Accessories at Top of Pole

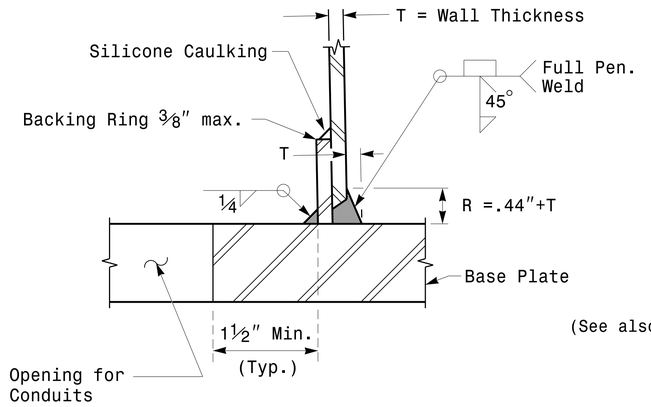

Section C-C
(Pole Attachment to Base Plate)

Full-Penetration
Groove Weld Detail

Prepared in the Offices of:
Transportation Mobility and Safety Division
Traffic Engineering Branch
Signal Design Section
750 N.Greenfield Pkwy,Garner,NC 27529

Typical Fabrication Details
For
Strain Poles

PLAN DATE:	OCTOBER 2017	DESIGNED BY:	K.C.DURIGON
PREPARED BY:	N. BITTING	REVIEWED BY:	D.C. SARKAR

REVISIONS	INIT.	DATE

SCALE
0 NA
NONE

SEAL
NORTH CAROLINA
PROFESSIONAL
SEAL
028094
ENGINEER
DEBESH C. SARKAR

DocuSigned by:
Debesh C. Sarkar
44EBE3B3D3A74EF...
SIGNATURE

10/11/2017
DATE

11-OCT-2017 08:25
S:*ITS&SW\ITS Signals\Signal Design Section\Eastern Region\MJ Sheets\2016\2014 Sig.M3 Std. Fabrication Details-Strain Poles.dgn
rmathisgr

DocuSign Envelope ID: 3AB00590-16A7-4DBF-945B-115C94D4A1AB

PROJECT ID. NO.	SHEET NO.
W-5601GA	Sig.M4

Fabrication Details – Mast Arm Poles

Note:
1. Opening in pole base plate shall be equal to pole base inside diameter minus 3½" but shall not be less than 8½".

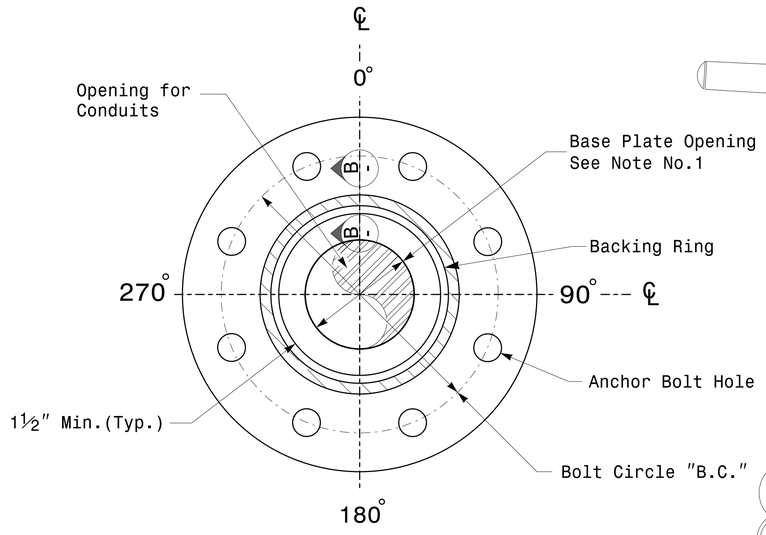

Section A-A

Pole Base Plate Details

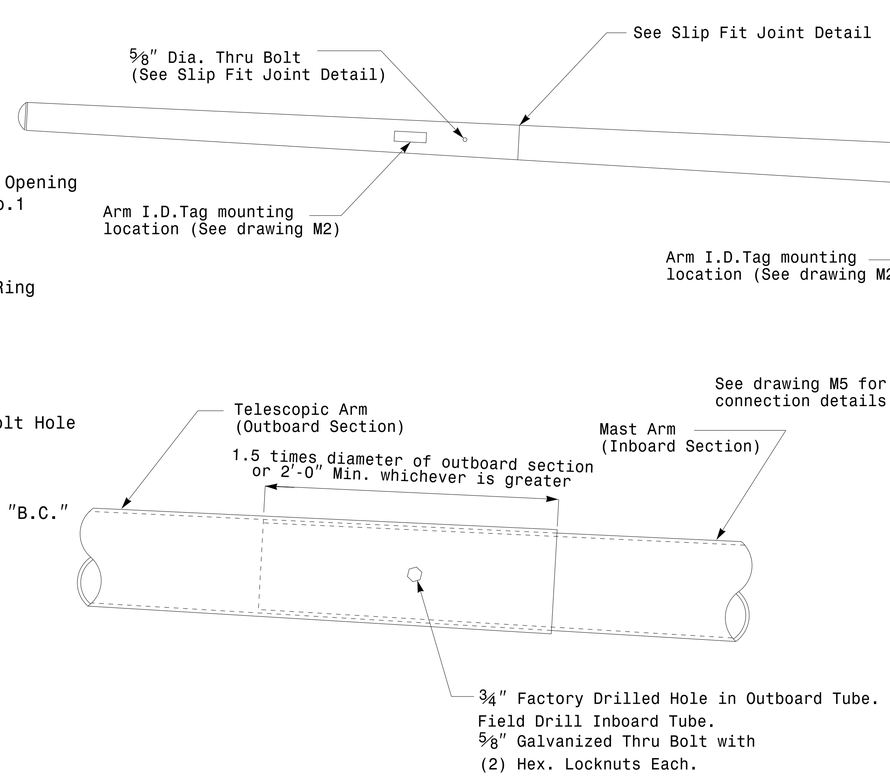

Slip Fit Joint Detail for Mast Arm

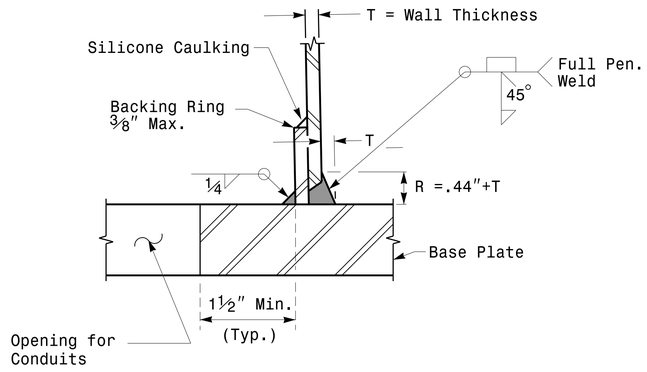

Section B-B

(Pole Attachment to Base Plate)

Full-Penetration Groove Weld Detail

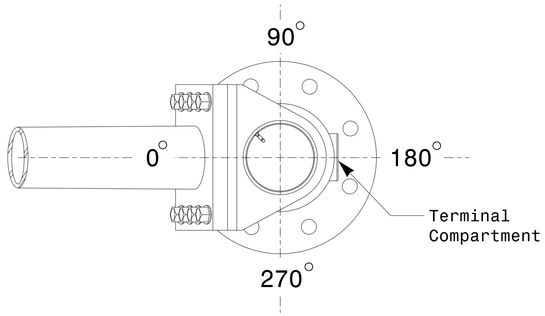

Mast Arm Radial Orientation

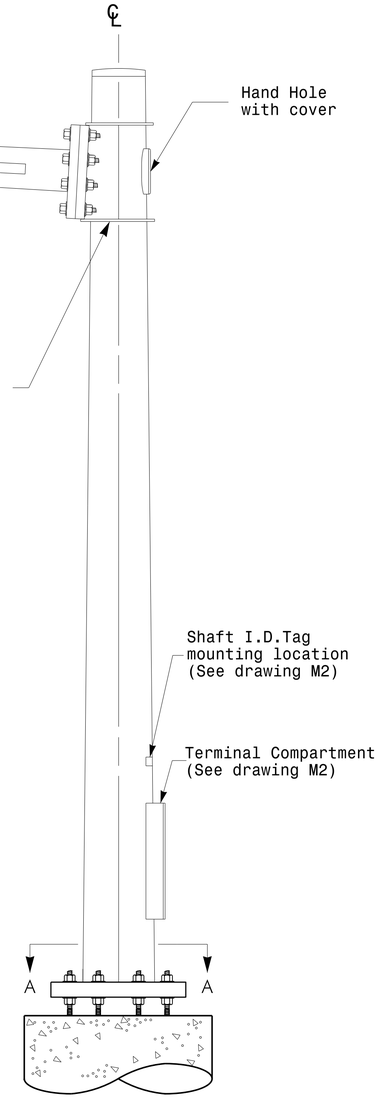

Mast Arm Pole

Prepared in the Offices of:
Transportation Mobility and Safety Division
NORTH CAROLINA DEPARTMENT OF TRANSPORTATION
Signal Design Section
750 N.Greenfield Pkwy.Garner,NC 27529

SCALE: 0 NA — NONE

Typical Fabrication Details For Mast Arm Poles

PLAN DATE:	OCTOBER 2017	DESIGNED BY:	K.C.DURIGON
PREPARED BY:	N. BITTING	REVIEWED BY:	D.C. SARKAR

REVISIONS	INIT.	DATE

SEAL
NORTH CAROLINA PROFESSIONAL SEAL 028094 ENGINEER DEBESH C. SARKAR

DocuSigned by: Debesh C. Sarkar 44EBE3B5B5A47...
SIGNATURE

10/11/2017
DATE

11-OCT-2017 08:33
S:*ITS&SU\ITS Signals\Signal Design Section\Eastern Region\MS Sheets\2016\2014 Sig.M4 Std. Fabrication Details-Mast Arm Poles.dgn
rsullivan

DocuSign Envelope ID: 3AB00590-16A7-4DBF-945B-115C94D4A1AB

Welded Ring Stiffened Mast Arm Connection

PROJECT ID. NO.	SHEET NO.
W-5601GA	Sig.M5

Plan View

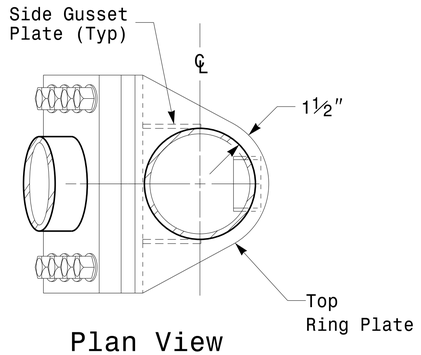

Side Elevation View

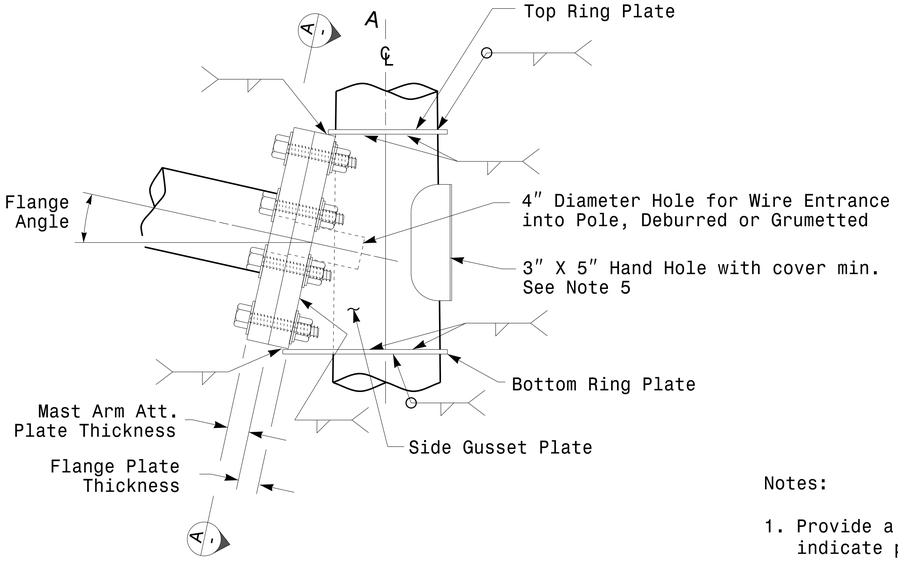

Bottom View

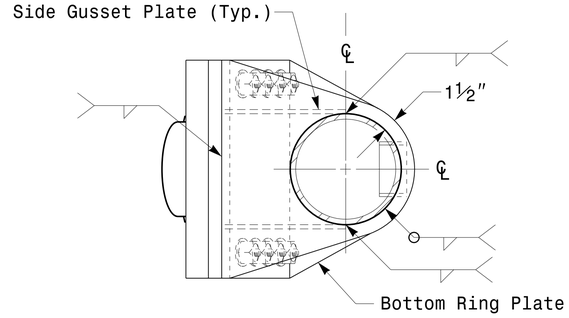

Front Elevation View

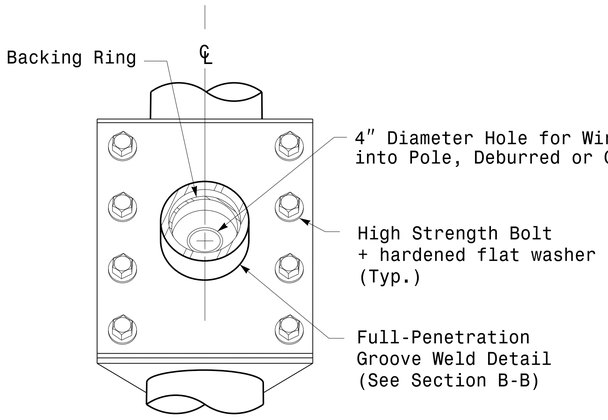

Section A-A
Mast Arm Attachment Plate

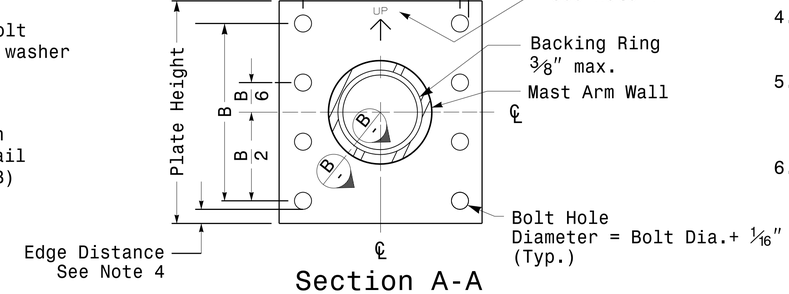

Back Elevation View

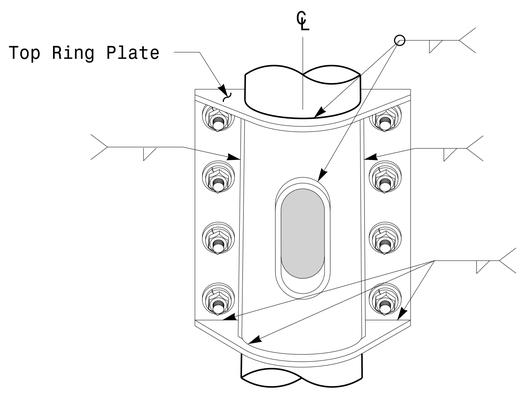

Section B-B
Full-Penetration Groove Weld Detail

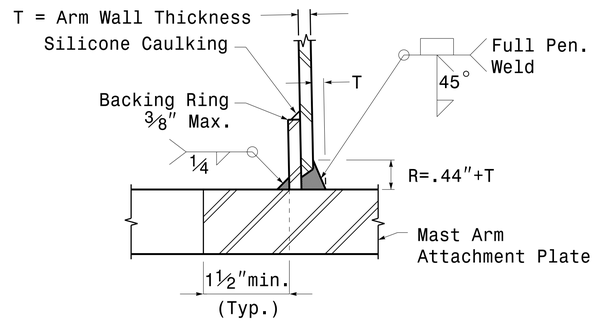

Notes:

1. Provide a permanent means of identification above the mast arm to indicate proper attachment orientation of the mast arm.
2. Designer will determine the size of all structural components, plates, fasteners, and welds shown unless they are already specified.
3. Fabricator is responsible for providing appropriate holes at drainage points to drain galvanizing materials.
4. For minimum edge distance follow AISC Table J3.4 and J3.5. For nominal bolt hole size use Table J3.3.
5. Provide upper handhole as necessary when shaft extensions are required for luminaire arms or camera. For poles without luminaires/camera, wiring can be done through the top of pole.
6. Allowable range of flange tilt angle will vary from 0° to as required.

Fabrication Details — Mast Arm Connection

Prepared in the Offices of:
Transportation Mobility and Safety Division
Signal Design Section
750 N.Greenfield Pkwy.Garner,NC 27529

Typical Fabrication Details For Mast Arm Connection To Pole

PLAN DATE:	OCTOBER 2017	DESIGNED BY:	C.F.ANDREWS
PREPARED BY:	N. BITTING	REVIEWED BY:	D.C. SARKAR

REVISIONS	INIT.	DATE

SCALE: 0 NA — NONE

SEAL
NORTH CAROLINA PROFESSIONAL SEAL 028094 ENGINEER DEBESH C. SARKAR

DocuSigned by: Debesh C. Sarkar 44EBE3E5A0A44... SIGNATURE

10/11/2017 DATE

11-OCT-2017 08:35
S:\TSAS\NITS Signal\Signal Design Section\Eastern Region\MM Sheets\2016\2014 Sig.M5 Std. Connection Fabrication Details-Mast Arm Poles.dgn
rsilfuser

DocuSign Envelope ID: 3AB00590-16A7-4DBF-945B-115C94D4A1AB

PROJECT ID. NO.	SHEET NO.
W-5601GA	Sig.M6

Strain Pole Attachments – Fabrication Details –

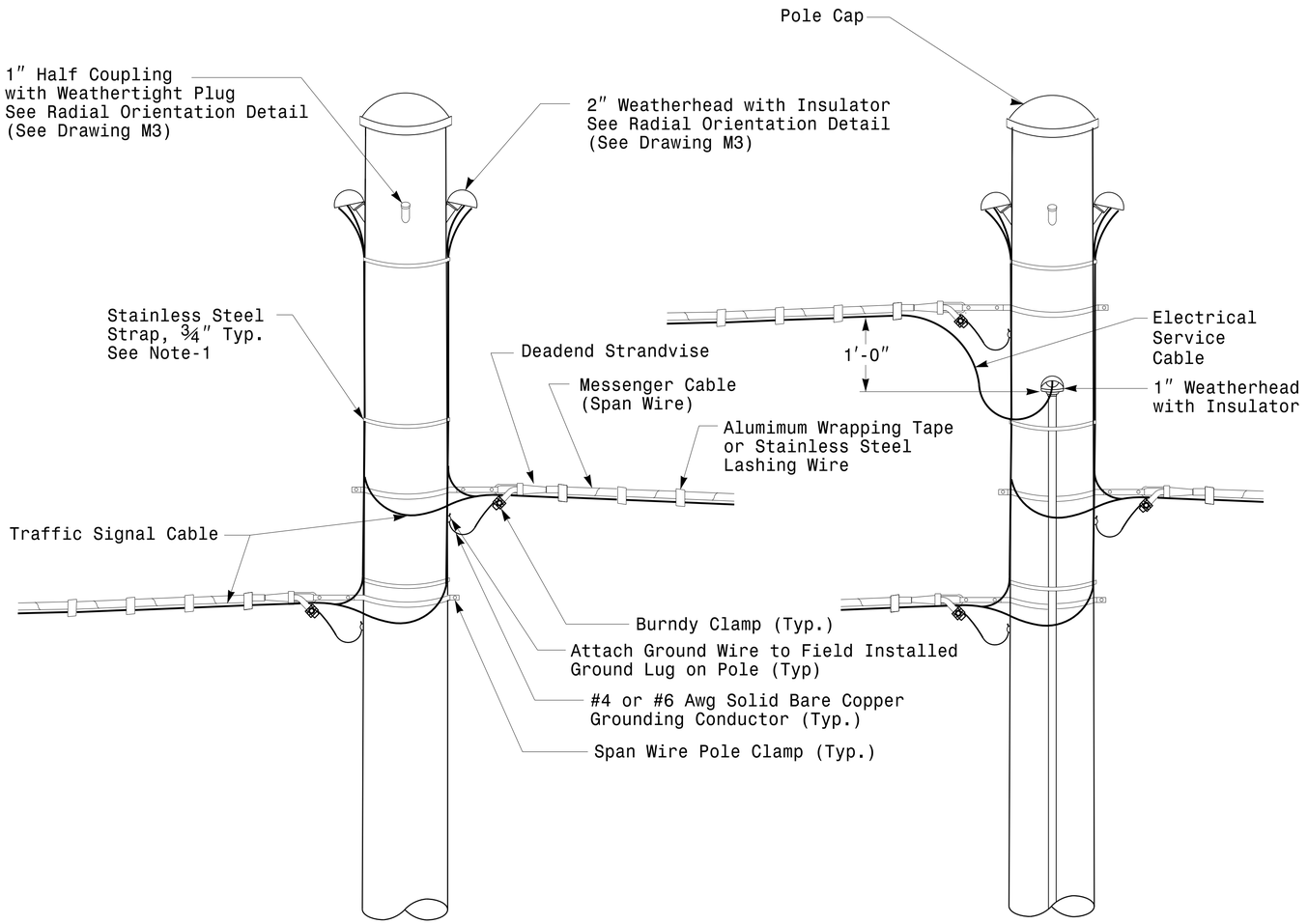

Strain Pole Attachments

NOTE:

1. Strap all signal cables to the side of the pole with ¾″ stainless steel straps when the distance between the spanwire attachment clamp and the weatherheads exceeds 3′-0″.
2. Provide minimum two spanwire pole clamps per pole.
3. It is prohibited to attach two span wires at one pole clamp.
4. For general requirements refer to NCDOT Standard Specifications for Roadway and Structures, January 2018.

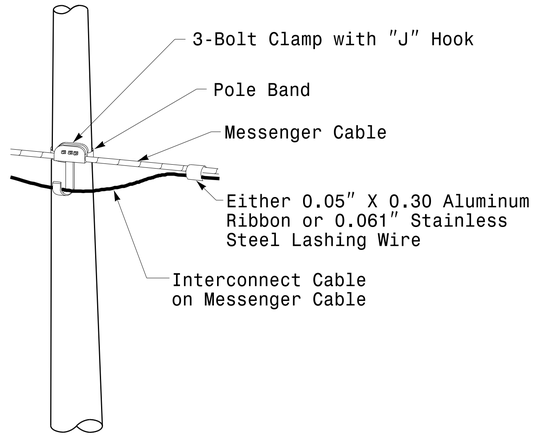

Attachment of Cable to Intermediate Metal Pole

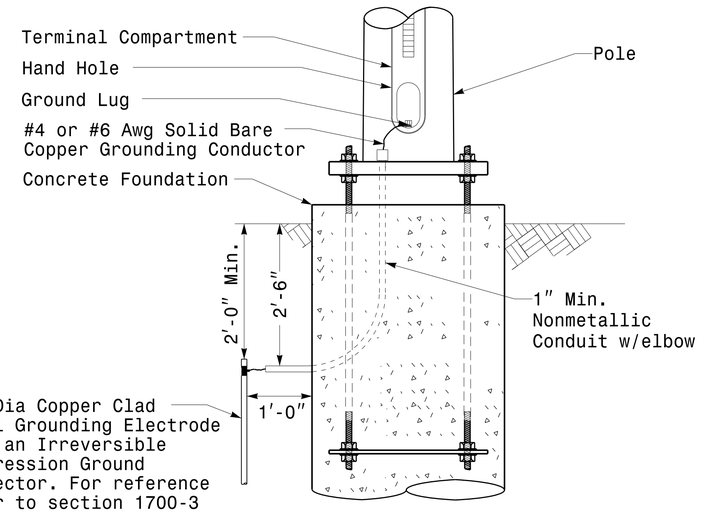

Metal Pole Grounding Detail For Strain Pole and Mast Arm

Prepared in the Offices of:
Transportation Mobility and Safety Division
Signal Design Section
750 N.Greenfield Pkwy.Garner.NC 27529

SCALE
0 NA
NONE

Typical Fabrication Details
For
Strain Pole Attachments

PLAN DATE:	OCTOBER 2017	DESIGNED BY:	C.F.ANDREWS
PREPARED BY:	N. BITTING	REVIEWED BY:	D.C. SARKAR

REVISIONS	INIT.	DATE

SEAL
NORTH CAROLINA PROFESSIONAL SEAL 028094 ENGINEER DEBESH C. SARKAR

DocuSigned by: Debesh C. Sarkar
SIGNATURE

10/11/2017
DATE

11-OCT-2017 08:36
S:\TS&SU\TS Signals\Signal Design Section\Eastern Region\MU Sheets\2016\2014 Sig_M6 Std. Fabrication Details-Strain Poles.dgn
rgilmer

DocuSign Envelope ID: 3AB00590-16A7-4DBF-945B-115C94D4A1AB

PROJECT ID. NO.	SHEET NO.
W-5601GA	Sig.M7

Construction Details – Foundations

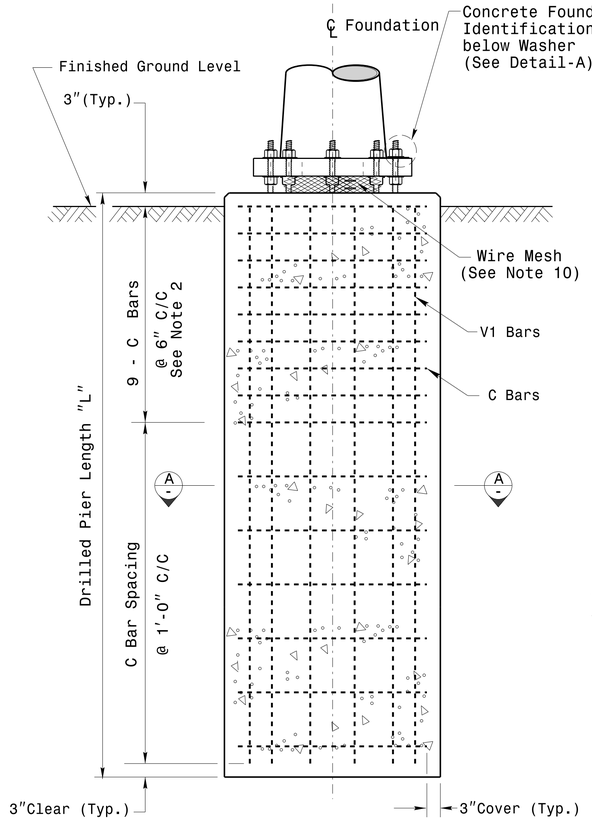

Concrete Shaft Elevation

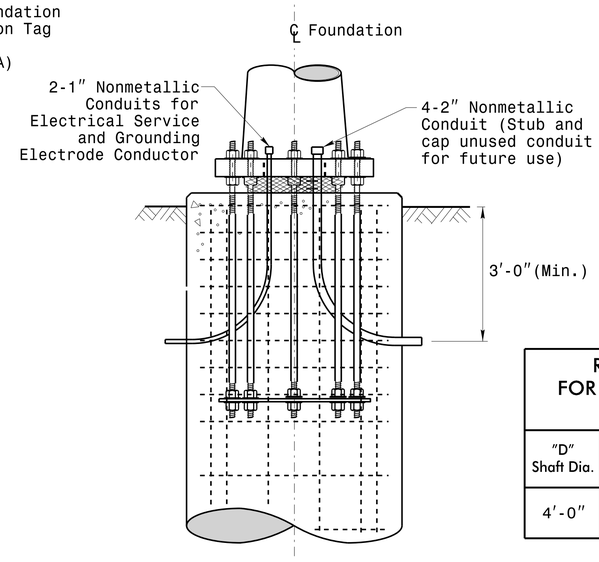

Typical Foundation Conduit Details

REINFORCING STEEL TABLE FOR STANDARD DRILL PIER SHAFT (4′–0″ DIAMETER)						
"D" Shaft Dia.	Conc. Volume (cu. yds.)	Bar Name	MIN.	Size	Type	Length
4′-0″	.465 x L	V1	—	#8	STR.	**
		C	*	#4	CIR.	12′-6″

* See Note No. 2
** See Note No. 3

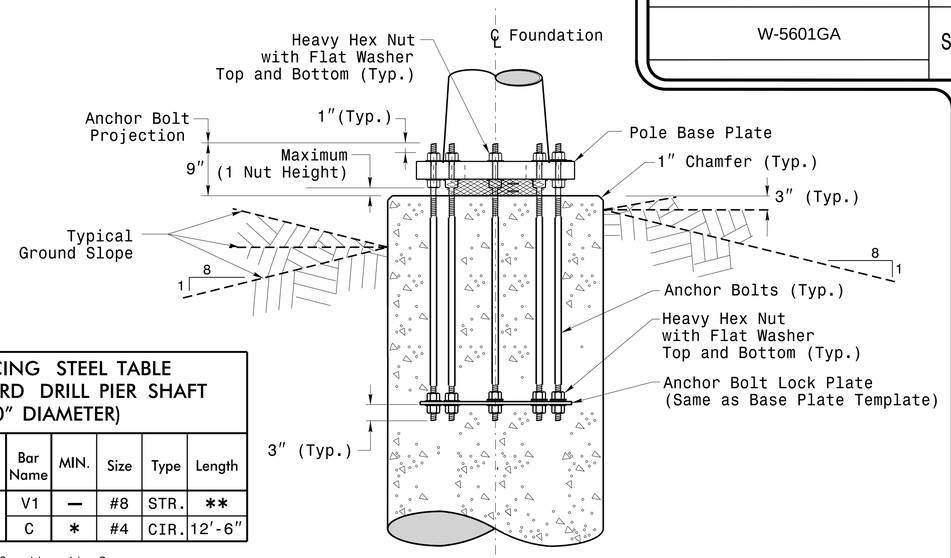

Typical Foundation Anchor Bolt Details

(Reinforcing Cage Not Shown for Clarity)

General Notes:

1. If actual subsurface conditions differ significantly from boring data contact the Engineer before excavating or placing concrete.
2. Circular tie reinforcing rings may be vertically adjusted by +/-3″ at a depth between 2′-0″ and 3′-0″ to facilitate the installation of electrical conduit entering in the cage.
3. For standard foundations, see sheet Sig. M8 for details. Vertical reinforcing bars (V1) may be horizontally adjusted by +/-3″ to facilitate the installation of electrical conduit entering into the cage.
4. Provide 2″ to 5″ foundation projection above ground level depending on the ground slope.
5. Unless otherwise shown, foundation designs are based on non-sloping level ground surfaces with slope ratios of 8:1 (H:V) or flatter. If actual ground line slopes are steeper contact the Engineer before excavating or placing concrete.
6. Construct foundations in accordance with NCDOT Standard Provisions SP09 R005- Foundations and Anchor Rod Assemblies for Metal Poles. All applicable 2018 NCDOT Standard Specifications are referenced in this provision. Refer to the NCDOT Resources/Specifications page located on the Connect NCDOT website.

   https://connect.ncdot.gov/resources/Specifications and Special Provisions.aspx
7. Use air entrained AA concrete mix with a compression strength of f′c=4500 psi.(min.) after 28 days.
8. Use ASTM A615 grade 60 deformed bars for all reinforcing steel. Maintain at least 3″ cover on all reinforcement.
9. Locate the Identification Tag on the top of the base plate, directly above the conduit's entry point.
10. Provide two layers of galvanized welded 23 gauge (0.25) 6″ wide 4 mesh wire around pipes under the base plate and secure it with ties if necessary.
11. Preferred location for the I.D. Tag is as shown in Detail-A; directly above the conduit entering the foundation.

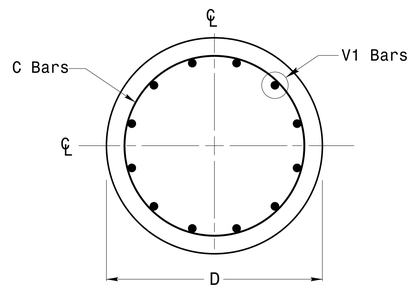

Section A-A

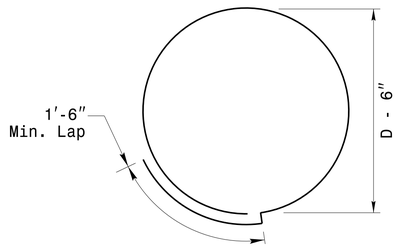

Typical "C" Bar Detail

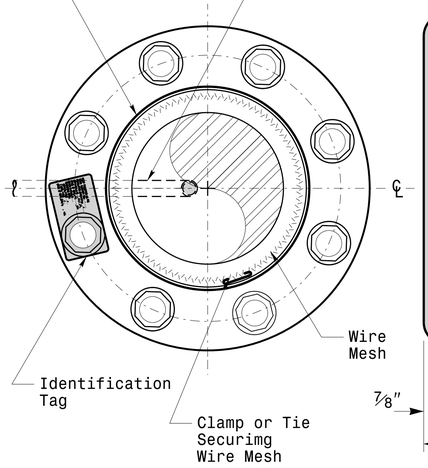

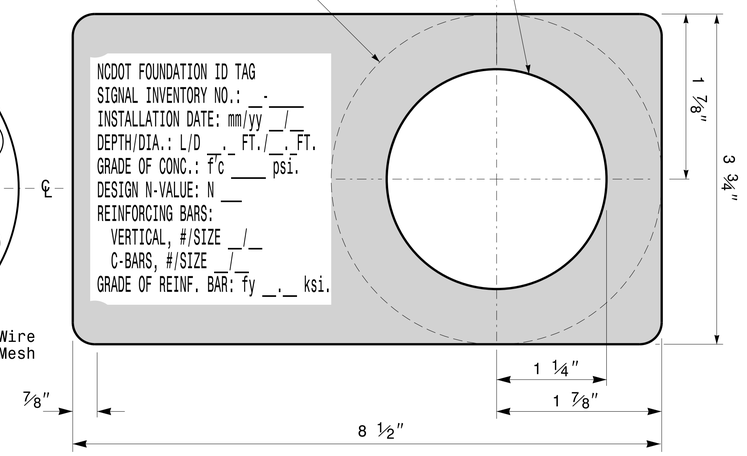

D = Diameter
L = Length/Depth
mm = Month
yy = Year

Detail-A

Concrete Foundation Identification Tag Details

Prepared in the Offices of:
Transportation Mobility and Safety Division
Signal Design Section
750 N.Greenfield Pkwy.Garner,NC 27529

Construction Details For Foundations

PLAN DATE:	OCTOBER 2018	DESIGNED BY:	C.B.COGDELL
PREPARED BY:	N. BITTING	REVIEWED BY:	D.C. SARKAR

SCALE: 0 NA NONE

REV. NO.	COMMENTS	INIT.	DATE
1	Revised Foundation Tag Details	N.B.	5/11/2015

SEAL
NORTH CAROLINA PROFESSIONAL SEAL 028094 ENGINEER DEBESH C. SARKAR

DocuSigned by: Debesh C. Sarkar 4AE8E3D3... SIGNATURE

10/11/2017 DATE

11-OCT-2017 08:37
S:\ITS&SU\ITS Signals\Signal Design Section\Eastern Region\MM Sheets\2016\2014 Sig.M7 Std. Construction Details-Strain Poles.dgn
rgardner

DocuSign Envelope ID: 3AB00590-16A7-4DBF-945B-115C94D4A1AB

SOIL CONDITION

PROJECT ID. NO.	SHEET NO.
W-5601GA	Sig.M8

		STANDARD STRAIN POLES						STANDARD FOUNDATIONS 48″ Diameter Drilled Pier Length (L) – Feet							Reinforcement			
								Clay				Sand			Longitudinal		Stirrups	
		Case No.	Pole Height (Ft.)	Base Plate BC (In.)	Reactions at the Pole Base: Axial (kip)	Shear (kip)	Moment (ft-kip)	Medium N-Value 4–8	Stiff N-Value 9–15	Very Stiff N-Value 16–30	Hard N-Value >30	Loose N-Value 4–10	Medium N-Value 11–30	Dense N-Value >30	Bar Size (#)	Quantity (ea.)	Bar Size (#)	Spacing (in.)
WIND ZONE 1	LIGHT	S26L3	26	25	2	11	270	19	13	10	8	17	14.5	12.5	8	12	4	12
		S30L3	30	25	2	11	300	19.5	13.5	10	8	17.5	15	13	8	14	4	12
		S35L3	35	25	3	11	320	20	13.5	10.5	8	17.5	15	13	8	14	4	12
	HEAVY	S30H3	30	29	3	16	450	24.5	16	12	9	21	17.5	15	8	16	4	6
		S35H3	35	29	4	16	515	26	17	12.5	9.5	22	18.5	16	8	16	4	6
WIND ZONE 2	LIGHT	S26L2	26	23	2	10	245	18	12.5	9.5	8	16.5	14	12	8	12	4	12
		S30L2	30	23	2	10	270	18.5	12.5	10	8	16.5	14	12.5	8	12	4	12
		S35L2	35	23	3	10	300	19.5	13	10	8	17	14.5	13	8	12	4	12
	HEAVY	S30H2	30	29	3	15	415	23	15.5	11.5	9	20	17	14.5	8	16	4	6
		S35H2	35	29	4	15	475	25	16.5	12	9.5	21	17.5	15.5	8	16	4	6
WIND ZONE 3	LIGHT	S26L2	26	23	2	10	245	18	12.5	9.5	8	16.5	14	12	8	12	4	12
		S30L2	30	23	2	10	270	18.5	12.5	10	8	16.5	14	12.5	8	12	4	12
		S35L2	35	23	3	10	300	19.5	13	10	8	17	14.5	13	8	12	4	12
	HEAVY	S30H2	30	29	3	15	415	23	15.5	11.5	9	20	17	14.5	8	16	4	6
		S35H2	35	29	4	15	475	25	16.5	12	9.5	21	17.5	15.5	8	16	4	6
WIND ZONE 4	LIGHT	S26L1	26	22	2	8	190	16	11.5	8.5	8	15	12.5	11	8	12	4	12
		S30L1	30	22	2	8	205	16.5	11.5	9	8	15	13	11.5	8	12	4	12
		S35L1	35	22	3	8	230	17	12	9	8	15.5	13.5	11.5	8	12	4	12
	HEAVY	S30H1	30	25	3	12	320	20.5	13.5	10.5	8	18	15	13.5	8	16	4	6
		S35H1	35	25	4	12	350	21	14	10.5	8.5	18.5	15.5	13.5	8	16	4	6
WIND ZONE 5	LIGHT	S26L2	26	23	2	10	245	18	12.5	9.5	8	16.5	14	12	8	12	4	12
		S30L2	30	23	2	10	270	18.5	12.5	10	8	16.5	14	12.5	8	12	4	12
		S35L2	35	23	3	10	300	19.5	13	10	8	17	14.5	13	8	12	4	12
	HEAVY	S30H2	30	29	3	15	415	23	15.5	11.5	9	20	17	14.5	8	16	4	6
		S35H2	35	29	4	15	475	25	16.5	12	9.5	21	17.5	15.5	8	16	4	6

48″ Dia. Foundations Concrete Volume (cubic yards) = (0.465) x Drilled Pier Length

General Notes:

1. Values shown in the "Reactions at the Pole Base" column represent the minimum acceptable capacity allowed for design using a design CSR of 1.00.
2. Use chairs and spacers to maintain proper clearance.
3. For foundation, always use air-entrain concrete mix.

Foundation Selection:

1. Perform a standard penetration test at each proposed foundation site to determine "N" value.
2. Select the appropriate wind zone from M 1 drawing.
3. Select the soil type (Clay or Sand) that best describes the soil characteristics.
4. Get the appropriate standard pole case number from the plans or from the Engineer.
5. Select the appropriate column under "Standard Foundations" based on soil type and "N" value. Select the appropriate row based on the pole load case.
6. The foundation depth is the value shown in the "Standard Foundations" category where the column and the row intersect.
7. Use Construction Procedures and Design Methods prescribed by FHWA-NHI-10-016 for Reference Drilled Shafts.

Standard Strain Pole Foundation–All Soil Condition

Prepared In the Offices of:
Transportation Mobility and Safety Division
NORTH CAROLINA DEPARTMENT OF TRANSPORTATION
Signal Design Section
750 N.Greenfield Pkwy.,Garner,NC 27529

Standard Strain Pole Foundation for All Soil Conditions

PLAN DATE:	OCTOBER 2017	DESIGNED BY:	C.B. COGDELL
PREPARED BY:	N. BITTING	REVIEWED BY:	D.C. SARKAR

REVISIONS	INIT.	DATE
Changed "Foundation Depth" to "Drilled Pier Length"in Conc. Eqn.	N.B.	7/12/2015

SCALE: 0 NA NONE

SEAL
NORTH CAROLINA PROFESSIONAL SEAL 028094 ENGINEER DEBESH C. SARKAR

DocuSigned by: Debesh C. Sarkar
SIGNATURE

10/11/2017
DATE

11-OCT-2017 08:40
S:\TS&SU\TS Signals\Signal Design Section\Eastern Region\MW Sheets\2016\2014 Sig.M8 Std. Strain Pole Found.-Saturated Soil Condition.dgn
rtaylor

PROJECT REFERENCE NO.	SHEET NO.
W-5601GA	SCP 1

1. INSTALL 3–WIRE COPPER SERVICE ENTRANCE CONDUCTORS
2. INSTALL 4–WIRE COPPER FEEDER CONDUCTORS
3. INSTALL 3–WIRE COPPER FEEDER CONDUCTORS
4. INSTALL SMFO CABLE
5. INSTALL CAT6 ETHERNET CABLE
6. INSTALL FIBER OPTIC DROP CABLE ASSEMBLY
7. INSTALL TRACER WIRE
8. TRENCH
9. INSTALL PVC CONDUIT
10. INSTALL RIGID, GALVANIZED STEEL CONDUIT
11. INSTALL RIGID, GALVANIZED STEEL RISER WITH WEATHERHEAD
12. INSTALL RIGID, GALVANIZED STEEL RISER WITH FIBER OPTIC CABLE SEAL
13. INSTALL OUTER–DUCT POLYETHYLENE CONDUIT
14. INSTALL POLYETHYLENE CONDUIT
15. DIRECTIONAL DRILL CONDUIT
16. BORE AND JACK CONDUIT
17. INSTALL CABLE(S) IN EXISTING CONDUIT
18. INSTALL CABLE(S) IN NEW CONDUIT
19. INSTALL CABLE(S) IN EXISTING RISER /METAL POLE
20. INSTALL CABLE(S) IN NEW RISER
21. INSTALL CABLE(S) IN EXISTING CONDUIT STUBOUTS
22. INSTALL NEW CONDUIT INTO EXISTING CABINET BASE (USE EXISTING CONDUIT STUB–OUTS WHEN AVAILABLE)
23. INSTALL NEW RISER INTO EXISTING CABINET BASE (USE EXISTING CONDUIT STUB–OUTS WHEN AVAILABLE)
24. INSTALL NEW CONDUIT INTO NEW POLE MOUNTED CABINET
25. INSTALL NEW RISER INTO EXISTING POLE MOUNTED CABINET
26. TERMINATE COMMUNICATIONS CABLE ON EXISTING TELEMETRY INTERFACE PANEL IN TRAFFIC SIGNAL CONTROLLER CABINET
27. INSTALL NEW ETHERNET EDGE SWITCH IN CABINET
28. INSTALL INTERCONNECT CENTER, PATCH PANEL, JUMPERS, AND FUSION SPLICE CABLE IN CABINET
29. INSTALL UNDERGROUND SPLICE ENCLOSURE
30. INSTALL AERIAL SPLICE ENCLOSURE
30A. MODIFY EXISTING SPLICE ENCLOSURE
31. INSTALL POLE MOUNTED SPLICE CABINET
32. INSTALL BASE MOUNTED SPLICE CABINET
33. REMOVE EXISTING SPLICE CABINET
34. INSTALL CABINET FOUNDATION
35. REMOVE EXISTING CABINET FOUNDATION
36. INSTALL CCTV CAMERA ASSEMBLY
37. INSTALL CCTV CAMERA WOOD POLE
38. INSTALL CCTV CAMERA METAL POLE AND FOUNDATION
39. INSTALL JUNCTION BOX
40. INSTALL OVERSIZED JUNCTION BOX
41. REMOVE EXISTING JUNCTION BOX
41A. INSTALL SPECIAL OVERSIZED JUNCTION BOX (36"x24"x24")
42. INSTALL WOOD POLE
43. REMOVE EXISTING WOOD POLE
44. INSTALL AERIAL GUY ASSEMBLY
45. INSTALL STANDARD GUY ASSEMBLY
46. INSTALL SIDEWALK GUY ASSEMBLY
47. INSTALL MESSENGER CABLE
48. REMOVE EXISTING COMMUNICATIONS CABLE AND MESSENGER CABLE
49. REMOVE EXISTING COMMUNICATIONS CABLE
50. INSTALL NCDOT FURNISHED CELL MODEM
51. INSTALL CABLE STORAGE RACKS (SNOW SHOES) AND STORE 100 FEET OF CABLE
52. INSTALL DELINEATOR MARKER
53. STORE 50 FEET OF COMMUNICATIONS CABLE
54. LASH CABLE(S) TO EXISTING SIGNAL/COMMUNICATIONS CABLE
55. LASH CABLE(S) TO EXISTING MESSENGER CABLE
56. LASH CABLE(S) TO NEW MESSENGER CABLE
57. MODIFY EXISTING ELECTRICAL SERVICE
58. INSTALL NEW ELECTRICAL SERVICE
59. INSTALL NEW EQUIPMENT CABINET DISCONNECT
60. INSTALL NEW POLE MOUNTED CABINET
61. INSTALL FIELD ETHERNET SWITCH
62A. BOND TRACER WIRE TO EQUIPMENT GROUND BUS
62B. DO NOT BOND TRACER WIRE TO EQUIPMENT GROUND BUS
63. INSTALL DMS ASSEMBLY
64. INSTALL CCTV EXTENSION POLE
65. RELOCATE EXISTING ELECTRICAL SERVICE

LEGEND

- NEW FIBER OPTIC COMMUNICATIONS CABLE (FO)
- NEW TWISTED PAIR COMMUNICATIONS CABLE (TWIST PR)
- EXISTING COMMUNICATIONS CABLE (EXI)
- EXISTING COMMUNICATIONS CABLE TO BE REMOVED (REM)
- NEW AERIAL GUY ASSEMBLY
- NEW CONDUIT
- EXISTING CONDUIT
- NEW DIRECTIONAL DRILLED CONDUIT (DD)
- NEW BORED AND JACKED CONDUIT (B&J)
- NEW JUNCTION BOX
- NEW SPECIAL OVERSIZED JUNCTION BOX
- EXISTING JUNCTION BOX
- NEW WOOD POLE
- EXISTING WOOD POLE
- NEW AERIAL SPLICE ENCLOSURE (S)
- NEW METAL POLE
- EXISTING METAL POLE
- NEW CCTV CAMERA ASSEMBLY
- EXISTING CCTV CAMERA ASSEMBLY
- NEW STANDARD GUY ASSEMBLY
- EXISTING GUY ASSEMBLY
- NEW SIDEWALK GUY ASSEMBLY
- NEW CABLE STORAGE RACKS (SNOW SHOES)
- EXISTING MASTER CONTROLLER AND CABINET (M)
- NEW CONTROLLER AND CABINET
- EXISTING CONTROLLER AND CABINET
- EXISTING SPLICE CABINET (S)
- NEW SPLICE CABINET (S)
- SP — SIGNAL POLE
- XX–XXXX — SIGNAL INVENTORY NUMBER

CONSTRUCTION NOTE SYMBOLOGY KEY

- XX — INDICATES NUMBER OF CABLES, LOOPS, ETC.
- XX — INDICATES NUMBER OF FIBERS PER CABLE, TWISTED PAIRS PER CABLE, ETC.
- XX — INDICATES NUMBER OF RISER(S)/CONDUIT(S)
- XX — INDICATES DIAMETER OF RISER(S)/CONDUIT(S) (INCH)
- XX" / YYYY — DISTANCE ABOVE (IN) REFERENCE POINT
- YYYY / XX" — REFERENCE POINT DISTANCE BELOW (IN)

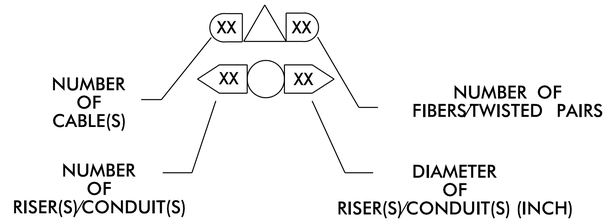

DOCUMENT NOT CONSIDERED FINAL UNLESS ALL SIGNATURES COMPLETED

RK&K
P: (919) 878-9560
8601 Six Forks Road, Forum 1,Suite 700
Raleigh, North Carolina 27615-3960
NC License No. F-0112
Engineers | Construction Managers | Planners | Scientists
www.rkk.com
Responsive People | Creative Solutions

Prepared for the Offices of:

NORTH CAROLINA DEPARTMENT OF TRANSPORTATION — Transportation Mobility and Safety Division, Intermodal Transportation Systems Section

750 N. Greenfield Pkwy., Garner, NC 27529

SCALE: N/A

COMMUNICATIONS CABLE AND CONDUIT ROUTING PLANS

DIVISION 3 BRUNSWICK COUNTY CALABASH

PLAN DATE: JULY 2021 REVIEWED BY: DT SEARS

PREPARED BY: WP ERICKSON JONES REVIEWED BY:

REVISIONS	INIT.	DATE

SEAL
NORTH CAROLINA PROFESSIONAL SEAL 044558 ENGINEER DAVID T SEARS

DocuSigned by: David T Sears 11/19/2021
SIGNATURE DATE

CADD Filename:

PROJECT REFERENCE NO.	SHEET NO.
W-5601GA	SCP 2

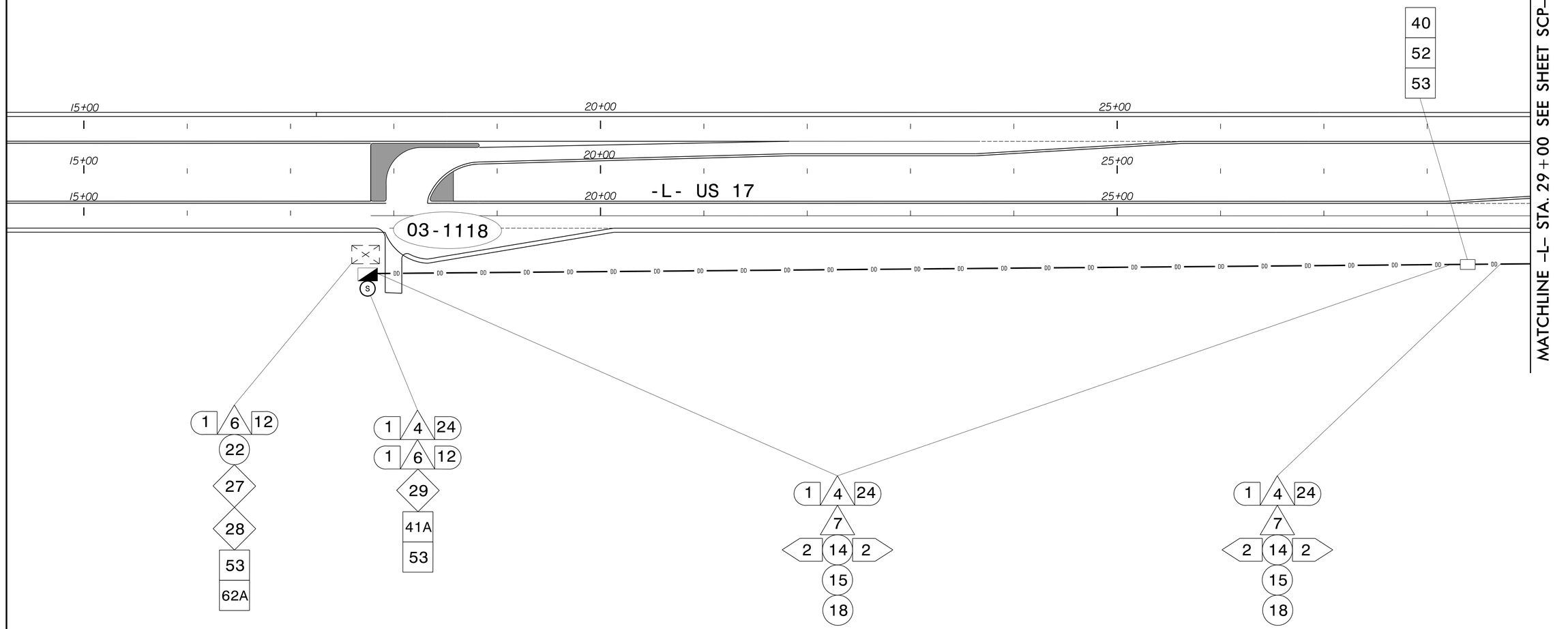

NOTES:

1. SIX (6) WEEKS PRIOR TO BEGINNING WORK ON THE SIGNAL SYSTEM, CONTACT STONEY MATHIS, NCDOT'S DIVISION 3 DEPUTY DIVISION TRAFFIC ENGINEER AT (910)341-2200 TO ALLOW FOR THE DEPARTMENT TO PROGRAM THE NEW FIELD ETHERNET SWITCHES WITH NECESSARY NETWORK CONFIGURATION DATA, INCLUDING BUT NOT LIMITED TO: THE PROJECT IP ADDRESS, DEFAULT GATEWAY, SUBNET MASK, AND VLAN ID INFORMATION. NOTIFY THE DEPARTMENT AFTER ALL WORK IS PERFORMED TO ENSURE THAT ALL FIBER CIRCUITS ARE FUNCTIONING PROPERLY. WORK IS NOT COMPLETE UNTIL THE SIGNAL SYSTEM IS OPERATIONAL.
2. THESE SIGNALS WILL COMMUNICATE WITH THE STATE CENTRACS SYSTEM VIA NCDOT FURNISHED CELL MODEM. CONTACT ROSS KIMBRO AT (910)385-5102 SIX (6) WEEKS PRIOR TO BEGINNING WORK ON THE SIGNAL SYSTEM FOR THE CELL MODEM.
3. MAINTAIN A MINIMUM OF SIX (6) FEET FROM THE EDGE OF PAVEMENT WHEN INSTALLING CONDUIT PARALLEL TO THE ROADWAY.
4. SEAL CONDUIT ENDS WITH DUCT AND CONDUIT SEALER AT ALL JUNCTION BOX/CABINET ENTRANCES.

DOCUMENT NOT CONSIDERED FINAL UNLESS ALL SIGNATURES COMPLETED

RK&K
P: (919) 878-9560
8601 Six Forks Road Suite 700 | Raleigh, North Carolina 27615-2965
NC License No. F-0112
Engineers | Construction Managers | Planners | Scientists
www.rkk.com
Responsive People | Creative Solutions

Prepared for the Offices of:
750 N. Greenfield Pkwy., Garner, NC 27529

SCALE
0 50
1"=50'

COMMUNICATIONS CABLE AND CONDUIT ROUTING PLANS

DIVISION 3 BRUNSWICK COUNTY CALABASH

PLAN DATE: NOVEMBER 2021 REVIEWED BY: DT SEARS

PREPARED BY: WP ERICKSON-JONES REVIEWED BY:

REVISIONS	INIT.	DATE

SEAL
NORTH CAROLINA PROFESSIONAL SEAL 044558 ENGINEER DAVID T. SEARS

DocuSigned by: David T Sears 11/19/2021
SIGNATURE DATE

CADD Filename:

PROJECT REFERENCE NO.	SHEET NO.
W-5601GA	SCP 3

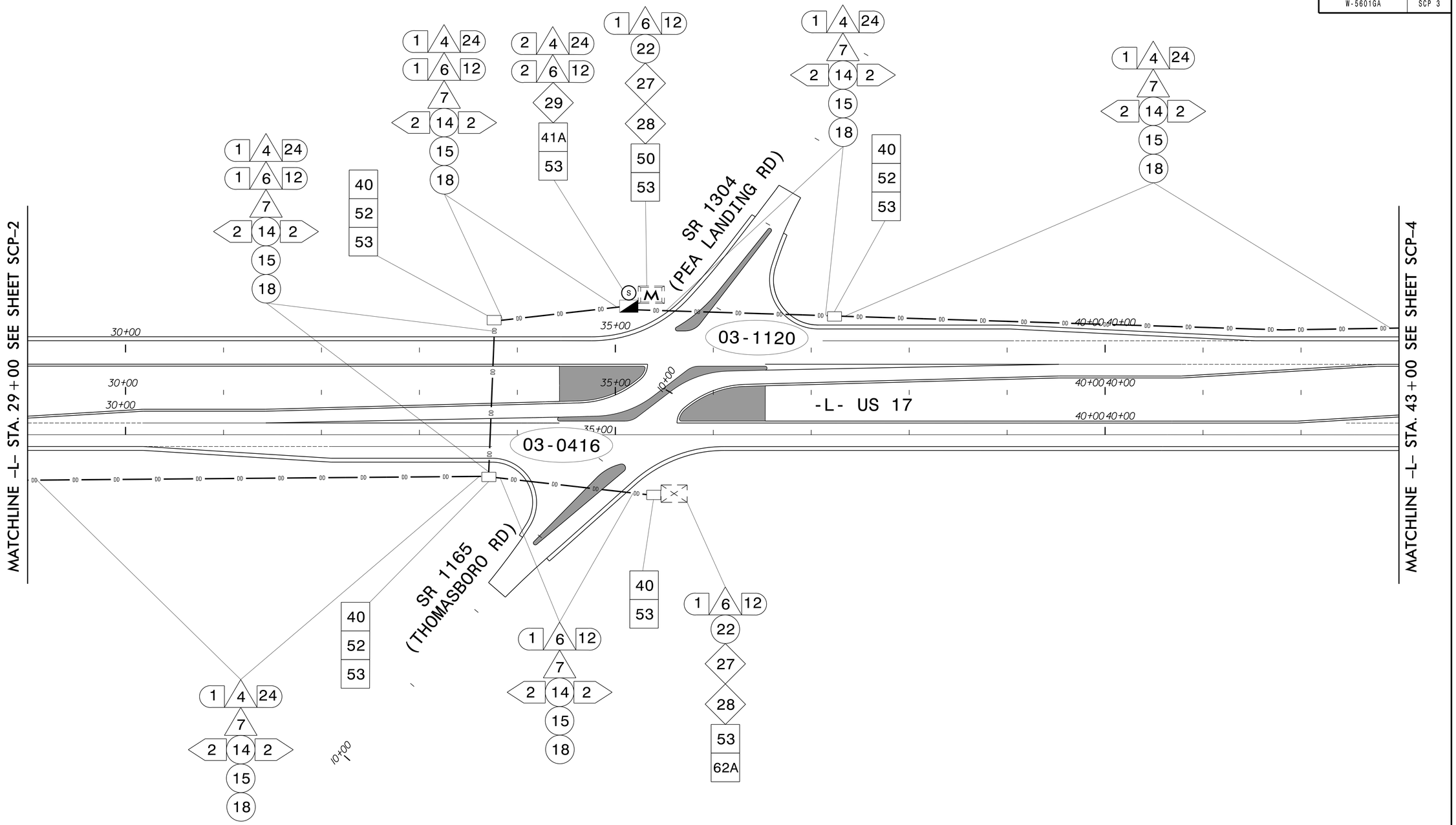

NOTES:

1. SIX (6) WEEKS PRIOR TO BEGINNING WORK ON THE SIGNAL SYSTEM, CONTACT STONEY MATHIS, NCDOT'S DIVISION 3 DEPUTY DIVISION TRAFFIC ENGINEER AT (910)341-2200 TO ALLOW FOR THE DEPARTMENT TO PROGRAM THE NEW FIELD ETHERNET SWITCHES WITH NECESSARY NETWORK CONFIGURATION DATA, INCLUDING BUT NOT LIMITED TO: THE PROJECT IP ADDRESS, DEFAULT GATEWAY, SUBNET MASK, AND VLAN ID INFORMATION. NOTIFY THE DEPARTMENT AFTER ALL WORK IS PERFORMED TO ENSURE THAT ALL FIBER CIRCUITS ARE FUNCTIONING PROPERLY. WORK IS NOT COMPLETE UNTIL THE SIGNAL SYSTEM IS OPERATIONAL.
2. THESE SIGNALS WILL COMMUNICATE WITH THE STATE CENTRACS SYSTEM VIA NCDOT FURNISHED CELL MODEM. CONTACT ROSS KIMBRO AT (910)385-5102 SIX (6) WEEKS PRIOR TO BEGINNING WORK ON THE SIGNAL SYSTEM FOR THE CELL MODEM.
3. MAINTAIN A MINIMUM OF SIX (6) FEET FROM THE EDGE OF PAVEMENT WHEN INSTALLING CONDUIT PARALLEL TO THE ROADWAY.
4. SEAL CONDUIT ENDS WITH DUCT AND CONDUIT SEALER AT ALL JUNCTION BOX/CABINET ENTRANCES.

DOCUMENT NOT CONSIDERED FINAL UNLESS ALL SIGNATURES COMPLETED

RK&K
P: (919) 878-9560
8601 Six Forks Road Suite 700 | Raleigh, North Carolina 27615-2965
NC License No. F-0112
Engineers | Construction Managers | Planners | Scientists
www.rkk.com
Responsive People | Creative Solutions

Prepared for the Offices of:
NORTH CAROLINA DEPARTMENT OF TRANSPORTATION
750 N. Greenfield Pkwy., Garner, NC 27529

COMMUNICATIONS CABLE AND CONDUIT ROUTING PLANS

DIVISION 3 BRUNSWICK COUNTY CALABASH

PLAN DATE: NOVEMBER 2021 REVIEWED BY: DT SEARS

PREPARED BY: WP ERICKSON-JONES REVIEWED BY:

SCALE 0 50 1"=50'

REVISIONS	INIT.	DATE

SEAL
NORTH CAROLINA PROFESSIONAL SEAL 044558 ENGINEER DAVID T. SEARS

DocuSigned by: David T Sears 11/19/2021
SIGNATURE DATE

CADD Filename:

PROJECT REFERENCE NO.	SHEET NO.
W-5601GA	SCP 4

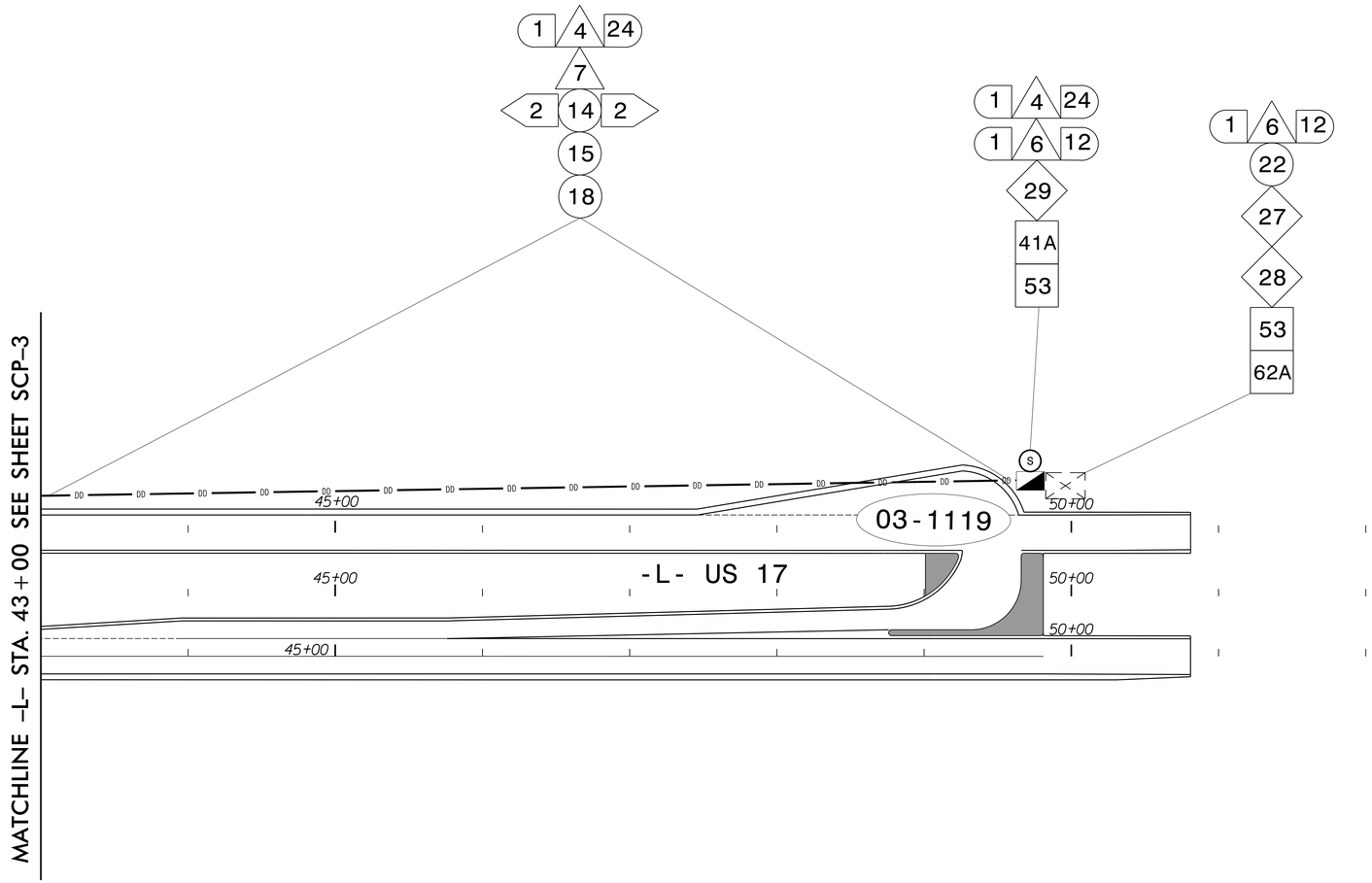

NOTES:

1. SIX (6) WEEKS PRIOR TO BEGINNING WORK ON THE SIGNAL SYSTEM, CONTACT STONEY MATHIS, NCDOT'S DIVISION 3 DEPUTY DIVISION TRAFFIC ENGINEER AT (910)341-2200 TO ALLOW FOR THE DEPARTMENT TO PROGRAM THE NEW FIELD ETHERNET SWITCHES WITH NECESSARY NETWORK CONFIGURATION DATA, INCLUDING BUT NOT LIMITED TO: THE PROJECT IP ADDRESS, DEFAULT GATEWAY, SUBNET MASK, AND VLAN ID INFORMATION. NOTIFY THE DEPARTMENT AFTER ALL WORK IS PERFORMED TO ENSURE THAT ALL FIBER CIRCUITS ARE FUNCTIONING PROPERLY. WORK IS NOT COMPLETE UNTIL THE SIGNAL SYSTEM IS OPERATIONAL.
2. THESE SIGNALS WILL COMMUNICATE WITH THE STATE CENTRACS SYSTEM VIA NCDOT FURNISHED CELL MODEM. CONTACT ROSS KIMBRO AT (910)385-5102 SIX (6) WEEKS PRIOR TO BEGINNING WORK ON THE SIGNAL SYSTEM FOR THE CELL MODEM.
3. MAINTAIN A MINIMUM OF SIX (6) FEET FROM THE EDGE OF PAVEMENT WHEN INSTALLING CONDUIT PARALLEL TO THE ROADWAY.
4. SEAL CONDUIT ENDS WITH DUCT AND CONDUIT SEALER AT ALL JUNCTION BOX/CABINET ENTRANCES.

DOCUMENT NOT CONSIDERED FINAL UNLESS ALL SIGNATURES COMPLETED

RK&K
P: (919) 878-9560
8601 Six Forks Road Suite 700 | Raleigh, North Carolina 27615-2965
NC License No. F-0112
Engineers | Construction Managers | Planners | Scientists
www.rkk.com
Responsive People | Creative Solutions

Prepared for the Offices of:
Transportation Mobility and Safety Division
STATE OF NORTH CAROLINA
DEPARTMENT OF TRANSPORTATION
Intelligent Transportation Systems Section
750 N. Greenfield Pkwy., Garner, NC 27529

SCALE
0 50
1"=50'

COMMUNICATIONS CABLE AND CONDUIT ROUTING PLANS

DIVISION 3 BRUNSWICK COUNTY CALABASH

PLAN DATE:	NOVEMBER 2021	REVIEWED BY:	DT SEARS
PREPARED BY:	WP ERICKSON-JONES	REVIEWED BY:	

REVISIONS	INIT.	DATE

SEAL
NORTH CAROLINA PROFESSIONAL SEAL 044558 ENGINEER DAVID T. SEARS

DocuSigned by:
David T Sears 11/19/2021
0601A3F2BE6744E
SIGNATURE DATE

CADD Filename:

PROJECT REFERENCE NO.	SHEET NO.
W-5601GA	SCP 5

FIBER OPTIC CABLE

SPLICE ENCLOSURE
FOR SIGNAL INVENTORY # 03–1118
SHEET SCP 2

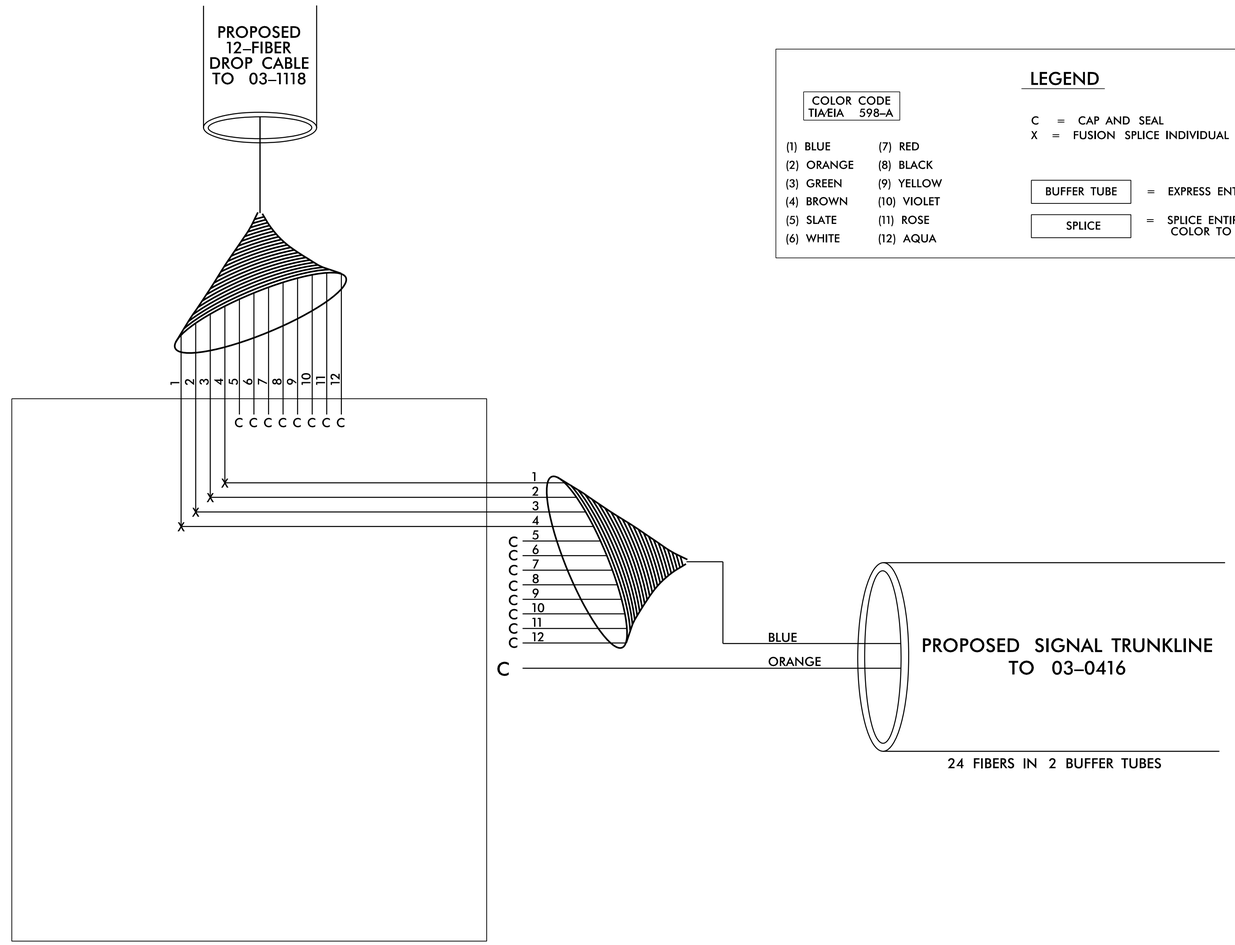

LEGEND

COLOR CODE TIA/EIA 598–A

(1) BLUE	(7) RED
(2) ORANGE	(8) BLACK
(3) GREEN	(9) YELLOW
(4) BROWN	(10) VIOLET
(5) SLATE	(11) ROSE
(6) WHITE	(12) AQUA

C = CAP AND SEAL
X = FUSION SPLICE INDIVIDUAL FIBER

BUFFER TUBE = EXPRESS ENTIRE BUFFER TUBE

SPLICE = SPLICE ENTIRE BUFFER TUBE COLOR TO COLOR

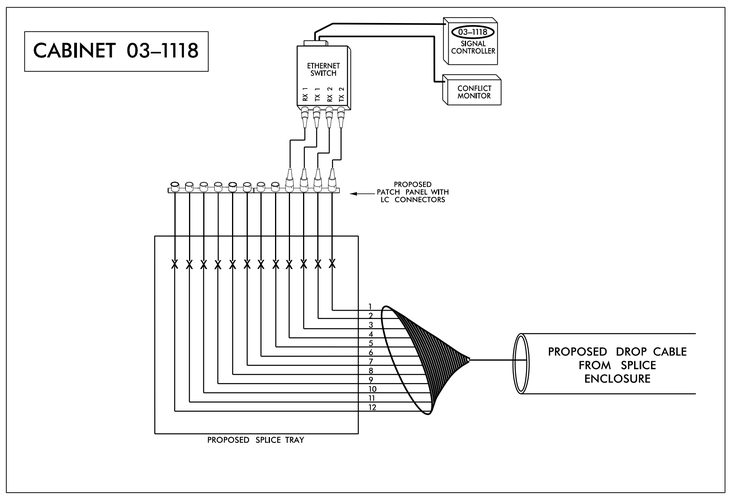

NOTES:

1. FIBER INTERCONNECT CENTER RACKS ARE SCHEMATIC ONLY, ACTUAL EQUIPMENT FORM MAY VARY.
2. UNUSED FIBERS LEFT COILED AND STORED IN SPLICE TRAY.
3. UNUSED BUFFER TUBES LEFT COILED AND STORED IN SPLICE TRAY.
4. ETHERNET SWITCH TERMINATION CONFIGURATIONS ARE GENERIC. CONTRACTOR IS RESPONSIBLE FOR DETERMINING /ENSURING PROPER TERMINATION.
5. INCLUDE ON THE COVER OF EACH SPLICE TRAY THE FOLLOWING:
   (1) SPLICE
   (2) DATE
   (3) COMPANY NAME
   (4) NAME OF INDIVIDUAL PERFORMING THE SPLICING

   PRIOR TO INSTALLING THE COVER ON THE SPLICE TRAY, TAKE A DIGITAL PHOTOGRAPH SHOWING THE SPLICE TRAY AND INFORMATION SHOWN ABOVE (1–4) AND SUBMIT PHOTOGRAPH ALONG WITH OTDR TEST RESULTS TO THE ENGINEER.

DOCUMENT NOT CONSIDERED FINAL UNLESS ALL SIGNATURES COMPLETED

RK&K
P: (919) 878-9560
8601 Six Forks Road, Forum 1,Suite 700
Raleigh, North Carolina 27615-3960
NC License No. F-0112
Engineers | Construction Managers | Planners | Scientists
www.rkk.com
Responsive People | Creative Solutions

Prepared for the Offices of:
NORTH CAROLINA DEPARTMENT OF TRANSPORTATION — Integrated Mobility and Safety Division — Smart Transportation Systems Section
750 N. Greenfield Pkwy. , Garner, NC 27529

SCALE
N/A

SPLICE DETAILS

DIVISION 3 BRUNSWICK COUNTY CALABASH

PLAN DATE: NOVEMBER 2021 REVIEWED BY: DT SEARS

PREPARED BY: WP ERICKSON-JONES REVIEWED BY:

REVISIONS	INIT.	DATE

SEAL
NORTH CAROLINA PROFESSIONAL SEAL 044558 ENGINEER DAVID T SEARS

DocuSigned by: David T Sears 11/19/2021
SIGNATURE DATE

CADD Filename:

11/19/2021
R:\Traffic\Signals\Design\SCP\W-5601GA_SCP_Splice Details.dgn
dsears

PROJECT REFERENCE NO.	SHEET NO.
W-5601GA	SCP 6

FIBER OPTIC CABLE

SPLICE ENCLOSURE
FOR SIGNAL INVENTORY
#03–0416 AND #03–1120
SHEET SCP 3

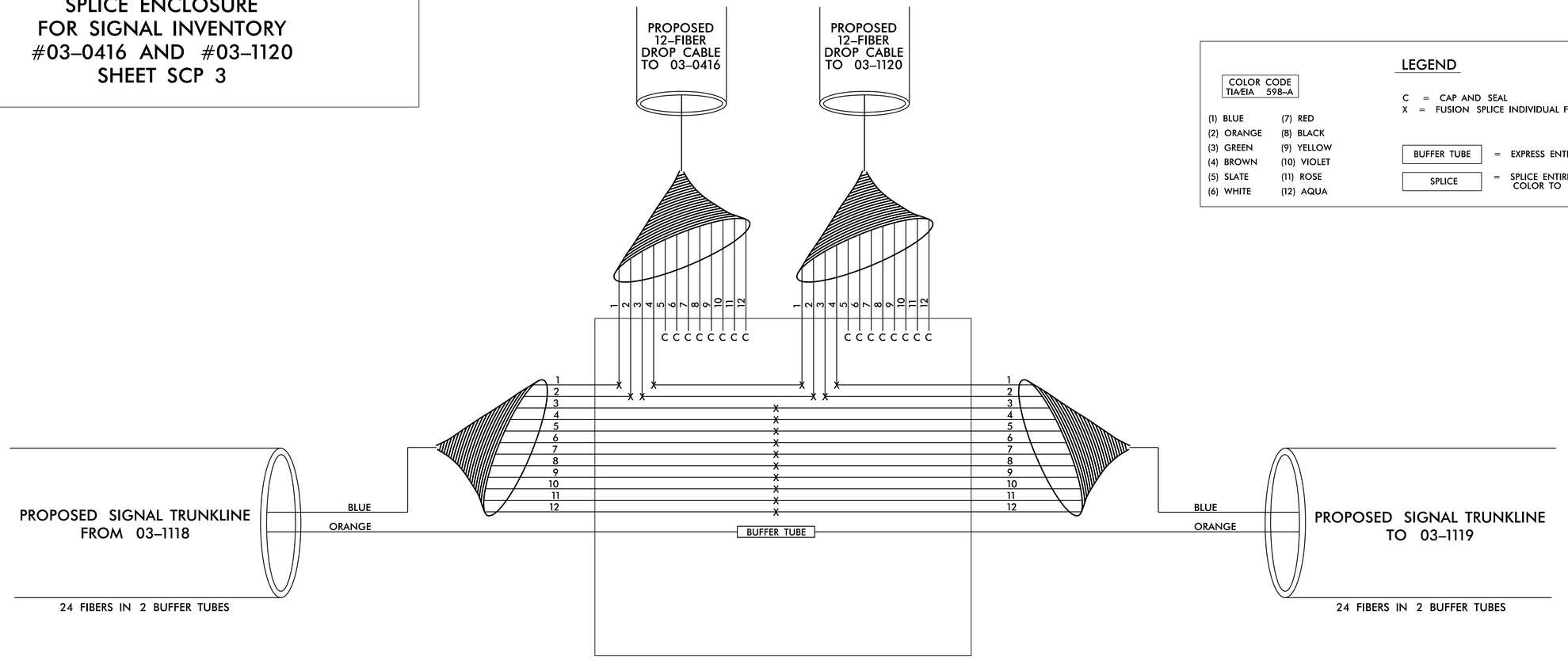

LEGEND

COLOR CODE TIA/EIA 598–A

(1) BLUE	(7) RED
(2) ORANGE	(8) BLACK
(3) GREEN	(9) YELLOW
(4) BROWN	(10) VIOLET
(5) SLATE	(11) ROSE
(6) WHITE	(12) AQUA

C = CAP AND SEAL
X = FUSION SPLICE INDIVIDUAL FIBER

BUFFER TUBE = EXPRESS ENTIRE BUFFER TUBE

SPLICE = SPLICE ENTIRE BUFFER TUBE COLOR TO COLOR

CABINET 03–0416

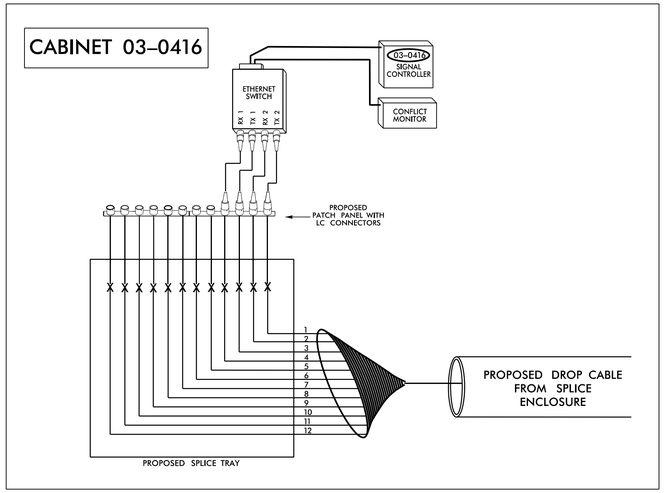

CABINET 03–1120

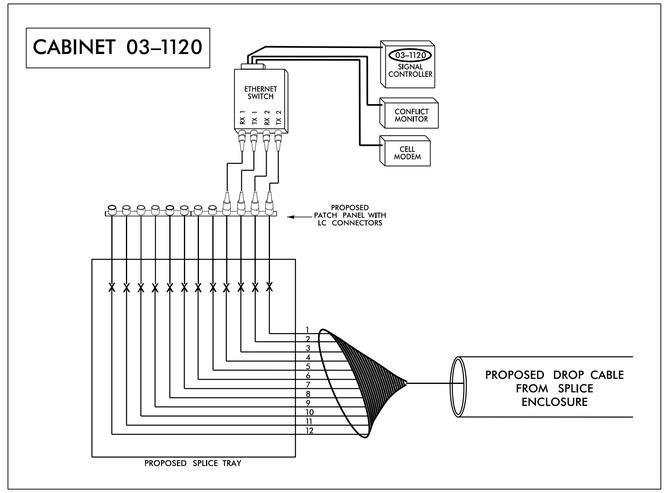

NOTES:

1. FIBER INTERCONNECT CENTER RACKS ARE SCHEMATIC ONLY, ACTUAL EQUIPMENT FORM MAY VARY.
2. UNUSED FIBERS LEFT COILED AND STORED IN SPLICE TRAY.
3. UNUSED BUFFER TUBES LEFT COILED AND STORED IN SPLICE TRAY.
4. ETHERNET SWITCH TERMINATION CONFIGURATIONS ARE GENERIC. CONTRACTOR IS RESPONSIBLE FOR DETERMINING /ENSURING PROPER TERMINATION.
5. INCLUDE ON THE COVER OF EACH SPLICE TRAY THE FOLLOWING:
   (1) SPLICE
   (2) DATE
   (3) COMPANY NAME
   (4) NAME OF INDIVIDUAL PERFORMING THE SPLICING

   PRIOR TO INSTALLING THE COVER ON THE SPLICE TRAY, TAKE A DIGITAL PHOTOGRAPH SHOWING THE SPLICE TRAY AND INFORMATION SHOWN ABOVE (1–4) AND SUBMIT PHOTOGRAPH ALONG WITH OTDR TEST RESULTS TO THE ENGINEER.

DOCUMENT NOT CONSIDERED FINAL UNLESS ALL SIGNATURES COMPLETED

RK&K
P: (919) 878-9560
8601 Six Forks Road, Forum 1,Suite 700
Raleigh, North Carolina 27615-3960
NC License No. F-0112
Engineers | Construction Managers | Planners | Scientists
www.rkk.com
Responsive People | Creative Solutions

Prepared for the Offices of:
NORTH CAROLINA DEPARTMENT OF TRANSPORTATION
750 N. Greenfield Pkwy. , Garner, NC 27529

SPLICE DETAILS

DIVISION 3 BRUNSWICK COUNTY CALABASH

PLAN DATE: NOVEMBER 2021 REVIEWED BY: DT SEARS

PREPARED BY: WP ERICKSON-JONES REVIEWED BY:

SCALE N/A

REVISIONS	INIT.	DATE

SEAL
NORTH CAROLINA PROFESSIONAL SEAL 044558 ENGINEER DAVID T SEARS

DocuSigned by: David T Sears 11/19/2021
SIGNATURE DATE

CADD Filename:

11/19/2021
R:\Traffic\Signals\Designs\SCP\W-5601GA_SCP_Splice Details.dgn
dsears

FIBER OPTIC CABLE

PROJECT REFERENCE NO.	SHEET NO.
W-5601GA	SCP 7

SPLICE ENCLOSURE
FOR SIGNAL INVENTORY # 03–1119
SHEET SCP 4

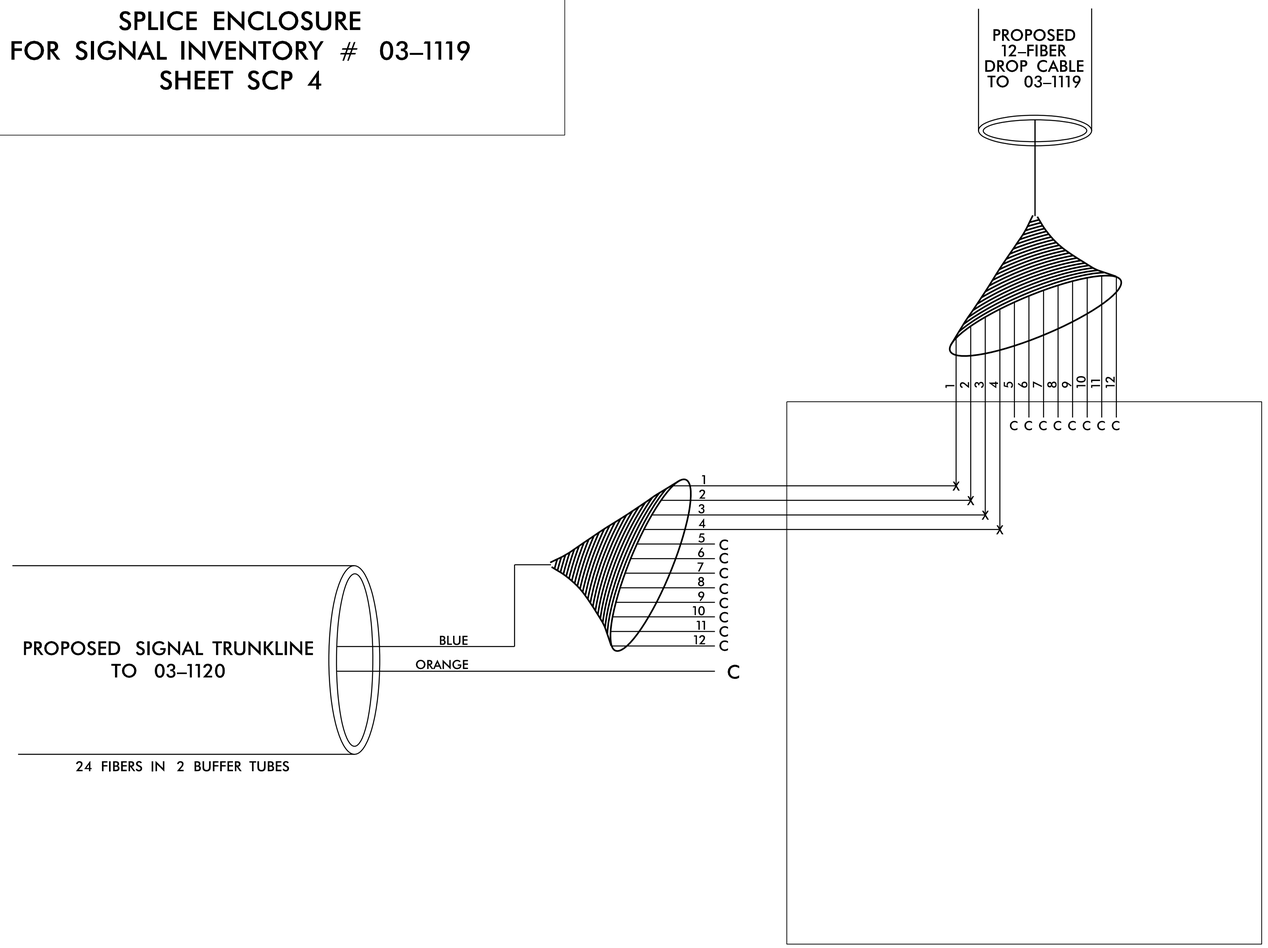

LEGEND

COLOR CODE
TIA/EIA 598–A

(1) BLUE	(7) RED
(2) ORANGE	(8) BLACK
(3) GREEN	(9) YELLOW
(4) BROWN	(10) VIOLET
(5) SLATE	(11) ROSE
(6) WHITE	(12) AQUA

C = CAP AND SEAL
X = FUSION SPLICE INDIVIDUAL FIBER

BUFFER TUBE = EXPRESS ENTIRE BUFFER TUBE

SPLICE = SPLICE ENTIRE BUFFER TUBE COLOR TO COLOR

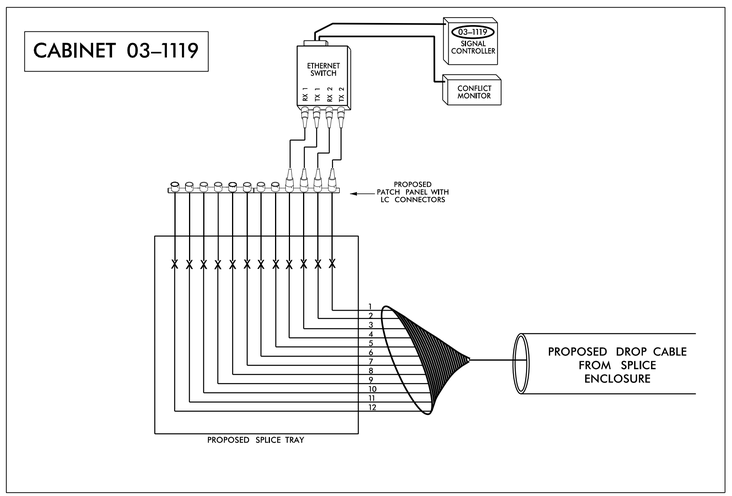

NOTES:

1. FIBER INTERCONNECT CENTER RACKS ARE SCHEMATIC ONLY, ACTUAL EQUIPMENT FORM MAY VARY.
2. UNUSED FIBERS LEFT COILED AND STORED IN SPLICE TRAY.
3. UNUSED BUFFER TUBES LEFT COILED AND STORED IN SPLICE TRAY.
4. ETHERNET SWITCH TERMINATION CONFIGURATIONS ARE GENERIC. CONTRACTOR IS RESPONSIBLE FOR DETERMINING /ENSURING PROPER TERMINATION.
5. INCLUDE ON THE COVER OF EACH SPLICE TRAY THE FOLLOWING:
   (1) SPLICE
   (2) DATE
   (3) COMPANY NAME
   (4) NAME OF INDIVIDUAL PERFORMING THE SPLICING

   PRIOR TO INSTALLING THE COVER ON THE SPLICE TRAY, TAKE A DIGITAL PHOTOGRAPH SHOWING THE SPLICE TRAY AND INFORMATION SHOWN ABOVE (1–4) AND SUBMIT PHOTOGRAPH ALONG WITH OTDR TEST RESULTS TO THE ENGINEER.

DOCUMENT NOT CONSIDERED FINAL UNLESS ALL SIGNATURES COMPLETED

RK&K
P: (919) 878-9560
8601 Six Forks Road, Forum 1,Suite 700
Raleigh, North Carolina 27615-3960
NC License No. F-0112
Engineers | Construction Managers | Planners | Scientists
www.rkk.com
Responsive People | Creative Solutions

Prepared for the Offices of:
NORTH CAROLINA DEPARTMENT OF TRANSPORTATION — Integrated Mobility and Safety Division — Smart Transportation Systems Section
750 N. Greenfield Pkwy., Garner, NC 27529

SCALE
N/A

SPLICE DETAILS

DIVISION 3 BRUNSWICK COUNTY CALABASH

PLAN DATE: NOVEMBER 2021 REVIEWED BY: DT SEARS

PREPARED BY: WP ERICKSON-JONES REVIEWED BY:

REVISIONS	INIT.	DATE

SEAL
NORTH CAROLINA PROFESSIONAL SEAL 044558 ENGINEER DAVID T SEARS

DocuSigned by: David T Sears 11/19/2021
SIGNATURE DATE

CADD Filename:

11/19/2021
R:\Traffic\Signals\Designs\SCP\W-5601GA_SCP_Splice Details.dgn
dsears

09/08/99

TIP PROJECT: W-5601GA

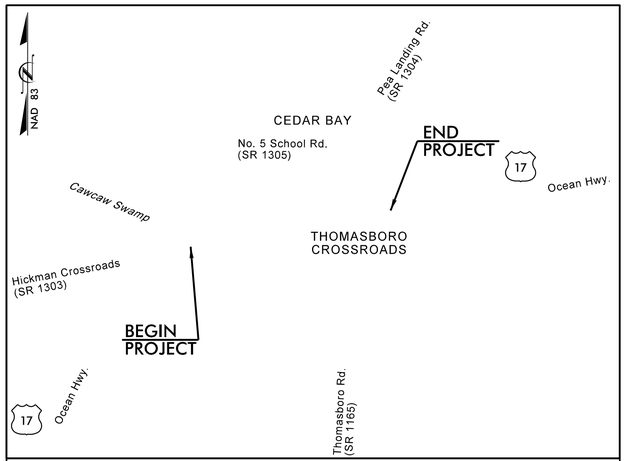

VICINITY MAP (NTS)

STATE OF NORTH CAROLINA
DIVISION OF HIGHWAYS

UTILITIES BY OTHERS PLANS
BRUNSWICK COUNTY

T.I.P. NO.	SHEET NO.
W-5601GA	UO-1

NOTE:
ALL UTILITY WORK SHOWN ON THIS SHEET IS DONE BY OTHERS.
NO PAYMENT WILL BE MADE TO THE CONTRACTOR FOR UTILITY WORK SHOWN ON THIS SHEET.

LOCATION: US-17 AT SR 1165 (THOMASBORO ROAD)/SR1304 (PEA LANDING ROAD)

TYPE OF WORK: GRADING, DRAINAGE, PAVING, WIDENING, RESURFACING, AND SIGNALS



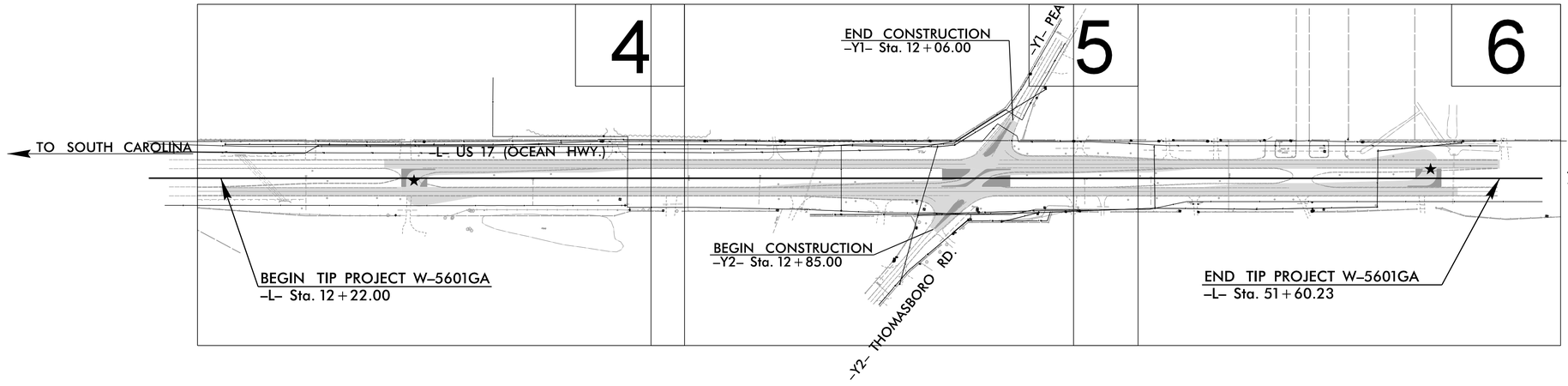

CONTRACTOR TO VERIFY LOCATION OF UTILITIES PRIOR TO EXCAVATION

GRAPHIC SCALES

50 25 0 50 100
PLANS

INDEX OF SHEETS

SHEET NO.:	DESCRIPTION:
UO-1	TITLE SHEET
UO-02 THRU UO-04	UBO PLAN SHEETS

UTILITY OWNERS ON PROJECT

A) ATLANTIC TELEPHONE MEMBERSHIP CORP. - TELECOMMUNICATION/FIBER OPTIC
B) ATT/T (TRANSMISSION) - FIBER OPTIC
C) BRUNSWICK COUNTY PUBLIC UTILITIES - WATER, SEWER, FIBER OPTIC
D) BRUNSWICK ELECTRICAL MEMBERSHIP CORP - POWER
E) DUKENET COMMUNICATIONS, LLC - FIBER OPTIC
F) NCDOT - TRAFFIC AND FIBER OPTICS
G) EARTHLINK BUSINESS - FIBER OPTIC
H) TIME WARNER CABLE - CABLE TV

PREPARED IN THE OFFICE OF:

RK&K

RUMMEL, KLEPPER & KAHL, LLP
8601 SIX FORKS RD., FORUM 1 SUITE 700
RALEIGH, NORTH CAROLINA 27615
NC LICENSE NO. F-0112
1-888-521-4455 OR 919-878-9560

Howard Woodall, PE	UTILITY PROJECT MANAGER
Nate Harris	PROJECT UTILITY COORDINATOR
Nate Harris	PROJECT UTILITY CADD DESIGNER

DIVISION OF HIGHWAYS
DIVISION 3
5501 BARBADOS BLVD.
CASTLE HAYNE, NC 28429

J. Steve Davis	DIVISION CONTACT #1
Anthony Law	DIVISION CONTACT #2
Chad Kimes, PE	DIVISION CONTACT #3

11/23/2021
R:\Utilities\Engineering\UBO\Proj\W-5601GA_UT_rdy_tsh.dgn
dlneffler

PROJECT REFERENCE NO.	SHEET NO.
W-5601GA	UO-2
THIS SHEET CORRESPONDS TO RDY-4	

UTILITIES BY OTHERS

ALL PROPOSED UTILITY WORK SHOWN ON THIS SHEET WILL BE DONE BY OTHERS. NO PAYMENT WILL BE MADE TO THE CONTRACTOR FOR PROPOSED UTILITY WORK SHOWN ON THIS SHEET.

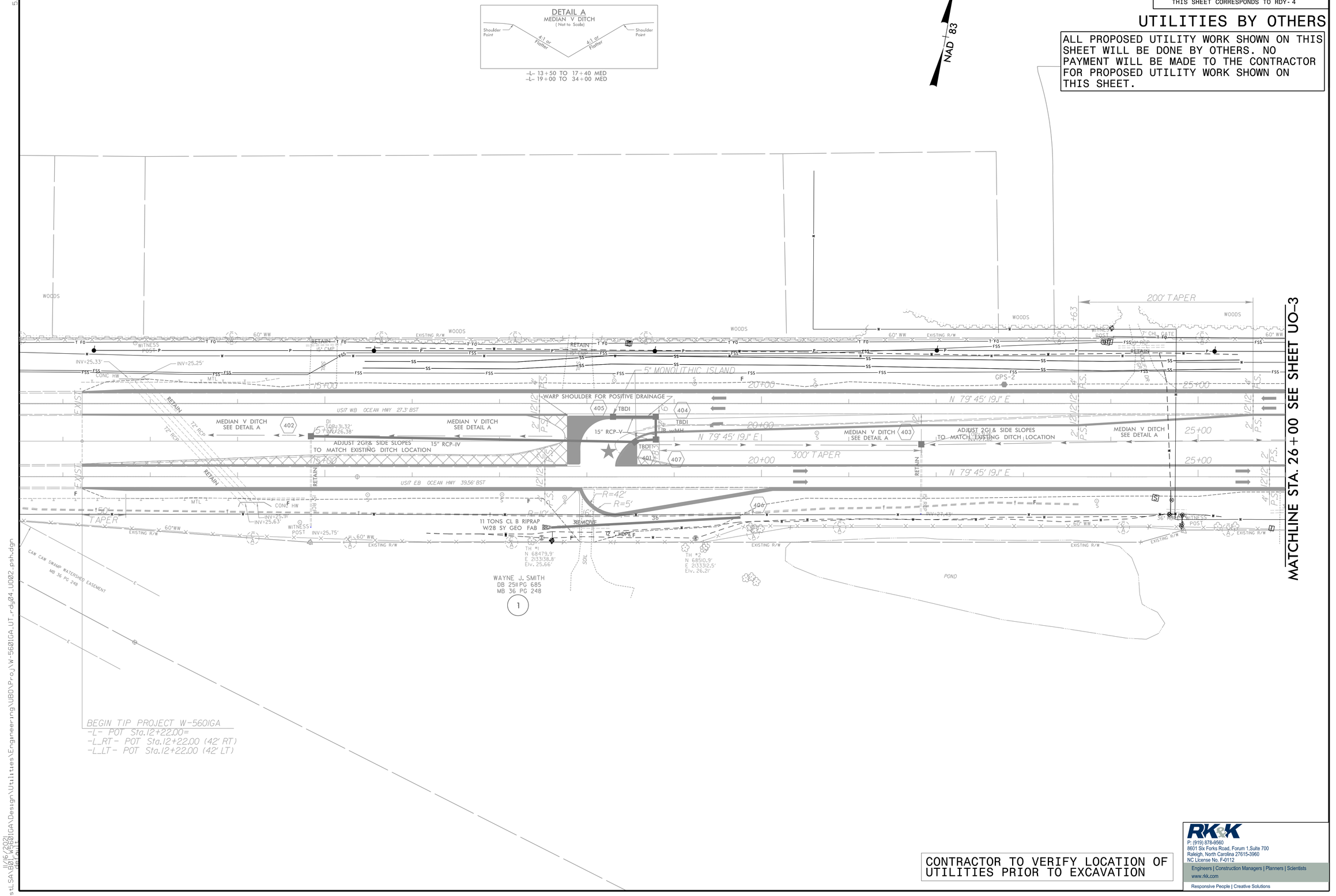

CONTRACTOR TO VERIFY LOCATION OF UTILITIES PRIOR TO EXCAVATION

RK&K
P: (919) 878-9560
8601 Six Forks Road, Forum 1,Suite 700
Raleigh, North Carolina 27615-3960
NC License No. F-0112
Engineers | Construction Managers | Planners | Scientists
www.rkk.com
Responsive People | Creative Solutions

5/14/99
11/6/2020
C:\Users\CEstes\LSAlbert\RK&K\Projects\W-5601GA\Design\Utilities\Engineering\UBO\Proj\W-5601GA_UT_rdy04_U002_psh.dgn

5/14/99

PROJECT REFERENCE NO.	SHEET NO.
W-5601GA	UO-3
THIS SHEET CORRESPONDS TO RDY-5	

UTILITIES BY OTHERS

ALL PROPOSED UTILITY WORK SHOWN ON THIS SHEET WILL BE DONE BY OTHERS. NO PAYMENT WILL BE MADE TO THE CONTRACTOR FOR PROPOSED UTILITY WORK SHOWN ON THIS SHEET.

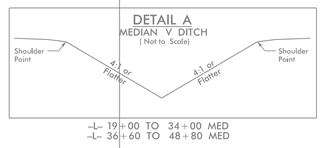

-L- 19+00 TO 34+00 MED
-L- 36+60 TO 48+80 MED

PROJECT REFERENCE NO.	SHEET NO.
W-5601GA	UO-4
THIS SHEET CORRESPONDS TO RDY-6	

UTILITIES BY OTHERS

ALL PROPOSED UTILITY WORK SHOWN ON THIS SHEET WILL BE DONE BY OTHERS. NO PAYMENT WILL BE MADE TO THE CONTRACTOR FOR PROPOSED UTILITY WORK SHOWN ON THIS SHEET.

NAD 83

DETAIL A
MEDIAN V DITCH
(Not to Scale)

Shoulder Point — 4:1 or Flatter — 4:1 or Flatter — Shoulder Point

-L- 40+00 TO 48+80 MED

MATCHLINE STA. 40+00 SEE SHEET UO-3

200' TAPER

-L- STA. 45+40.00

-L- POT Sta. 52+92.13

PIERCE ST 40' R/W

COLONIAL FUEL AND LUBRICANT SERVICES, INC.
DB 3444 PG 495
MB 3 PG 19
MB 1PG 148

THOMASBORO PROPERTIES, LLC.
DB 2697 PG 1157
MB 51PG 43
MB 1PG 148

TIM EZRA GORE
DB 134 PG 595
MB 3 PG 19

US17 WB OCEAN HWY 27' BST

US17 EB OCEAN HWY 39' BST

N 79° 45' 19.1" E

MEDIAN V DITCH
SEE DETAIL A

ADJUST 2GI & SIDE SLOPES TO MATCH EXISTING DITCH LOCATION

ADJUST 2GI

300' TAPER

2GI-D 601

TBDI

JB w/MH

50' TAPER

5' MONOLITHIC ISLAND

END TIP PROJECT W-5601GA
-L- POT Sta.50+81.00=
-L_RT- POT Sta.50+81.00 (42' RT)
-L_LT- POT Sta.50+81.00 (42' LT)

CONTRACTOR TO VERIFY LOCATION OF UTILITIES PRIOR TO EXCAVATION

RK&K
P: (919) 878-9560
8601 Six Forks Road, Forum 1,Suite 700
Raleigh, North Carolina 27615-3960
NC License No. F-0112
Engineers | Construction Managers | Planners | Scientists
www.rkk.com
Responsive People | Creative Solutions

5/14/99
11/6/2023
C:\Users\CEestL.SAE\ncdot.gov\OneDrive - DOT\Desktop\W-5601GA\Design\Utilities\Engineering\UBO\Proj\W-5601GA_UT_rdy06_U004_psh.dgn
dgn

8/23/99

PROJ. REFERENCE NO.	SHEET NO.
W-5601GA	X-0

US 17 WIDENING
BRUNSWICK COUNTY

T.I.P. PROJECT W-5601GA

LINE	SHEET NO.
-L-	X-1 THRU X-12
-Y1-	X-13
-Y2-	X-14

SHALLOW UNDERCUT

RFC

RELEASED FOR CONSTRUCTION

11/17/2021
R:\Roadway\XSC\W-5601GA_Rdy_xpl_index.dgn
aheller

0 5 10	PROJ. REFERENCE NO.	SHEET NO.
	W-5601GA	X-1

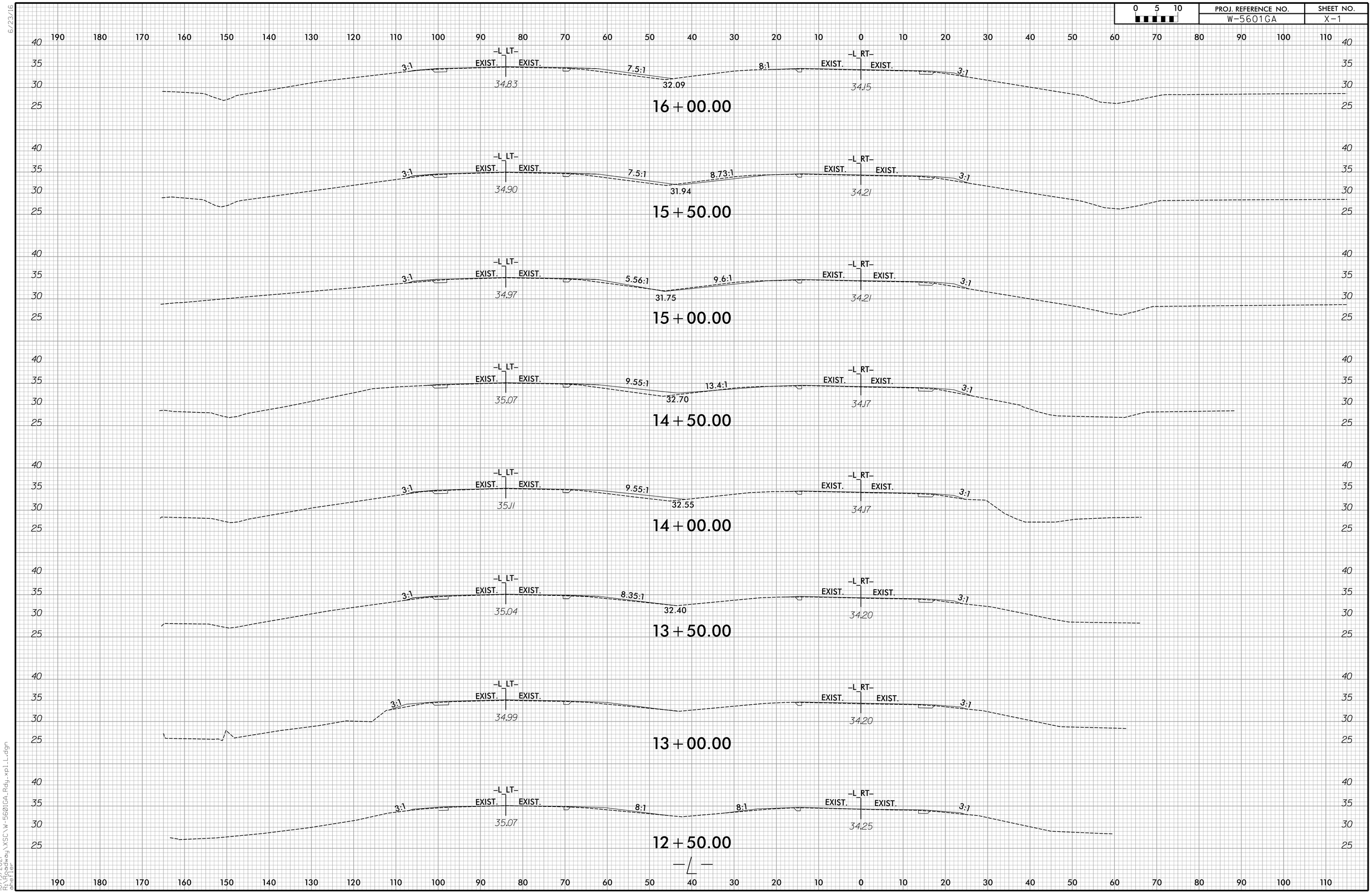

10/19/2021
R:\Roadway\XSC\W-5601GA_Rdy_xpl_L.dgn
aheller

0 5 10	PROJ. REFERENCE NO.	SHEET NO.
	W-5601GA	X-2

190 180 170 160 150 140 130 120 110 100 90 80 70 60 50 40 30 20 10 0 10 20 30 40 50 60 70 80 90 100 110

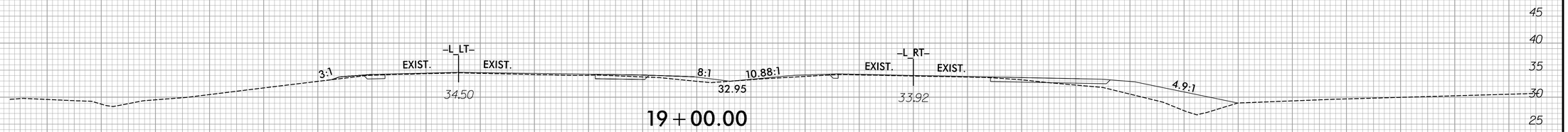

19 + 00.00



18 + 50.00

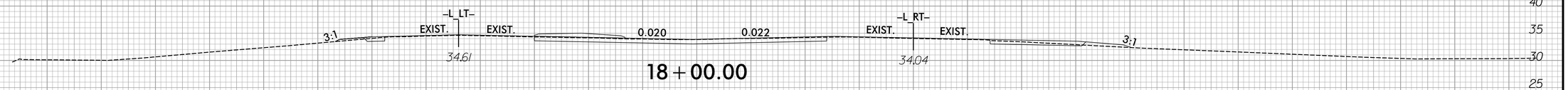

18 + 00.00

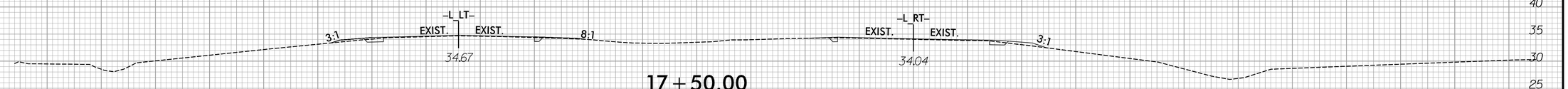

17 + 50.00

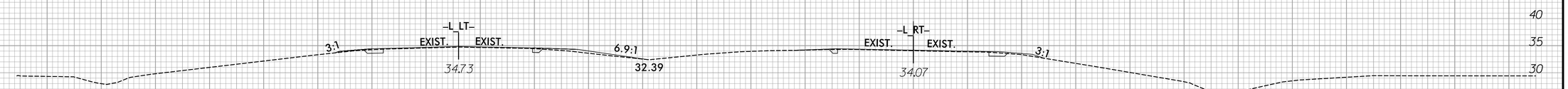

17 + 00.00



16 + 50.00

—⊿—

190 180 170 160 150 140 130 120 110 100 90 80 70 60 50 40 30 20 10 0 10 20 30 40 50 60 70 80 90 100 110

10/19/2021
R:\Roadway\XSC\W-5601GA_Rdy_xpl_L.dgn
sheller

6/23/16

0 5 10	PROJ. REFERENCE NO.	SHEET NO.
	W-5601GA	X-3

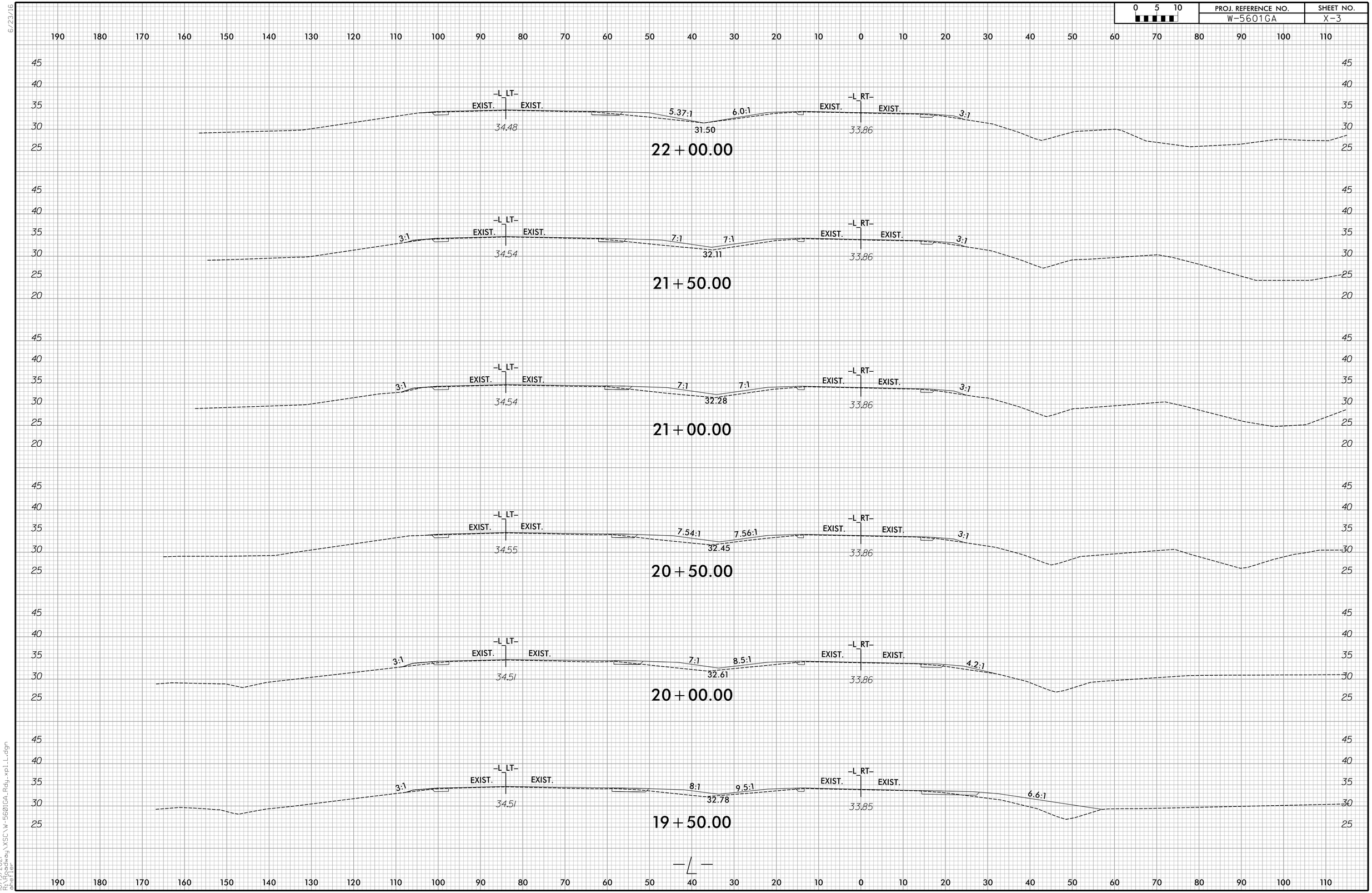

10/19/2021
R:\Roadway\XSC\W-5601GA_Rdy_xpl_L.dgn
aheifer

6/23/16

0 5 10	PROJ. REFERENCE NO.	SHEET NO.
	W-5601GA	X-4

190 180 170 160 150 140 130 120 110 100 90 80 70 60 50 40 30 20 10 0 10 20 30 40 50 60 70 80 90 100 110

45 40 35 30 25

–L_LT– –L_RT–

EXIST. EXIST. EXIST. EXIST.

3:1 12:1 13.1:1 3:1

35.13 32.99 34.36

25+00.00

45 40 35 30 25

–L_LT– –L_RT–

EXIST. EXIST. EXIST. EXIST.

3:1 10.5:1 13.62:1 3:1

34.97 32.84 34.08

24+50.00

45 40 35 30 25

–L_LT– –L_RT–

EXIST. EXIST. EXIST. EXIST.

3:1 10.5:1 10.33:1 3:1

34.81 32.68 34.04

24+00.00

45 40 35 30 25

–L_LT– –L_RT–

EXIST. EXIST. EXIST. EXIST.

3:1 9.32:1 9:1 3:1

34.65 32.52 33.98

23+50.00

45 40 35 30 25

–L_LT– –L_RT–

EXIST. EXIST. EXIST. EXIST.

8.6:1 8.6:1 3:1

34.57 32.37 33.91

23+00.00

45 40 35 30 25

–L_LT– –L_RT–

EXIST. EXIST. EXIST. EXIST.

8:1 8:1 3:1

34.52 32.21 33.88

22+50.00

—L—

190 180 170 160 150 140 130 120 110 100 90 80 70 60 50 40 30 20 10 0 10 20 30 40 50 60 70 80 90 100 110

10/19/2021
R:\Roadway\XSC\W-5601GA_Rdy_xpl_L.dgn
shelter

6/23/16

0 5 10	PROJ. REFERENCE NO.	SHEET NO.
	W-5601GA	X-5

190 180 170 160 150 140 130 120 110 100 90 80 70 60 50 40 30 20 10 0 10 20 30 40 50 60 70 80 90 100 110

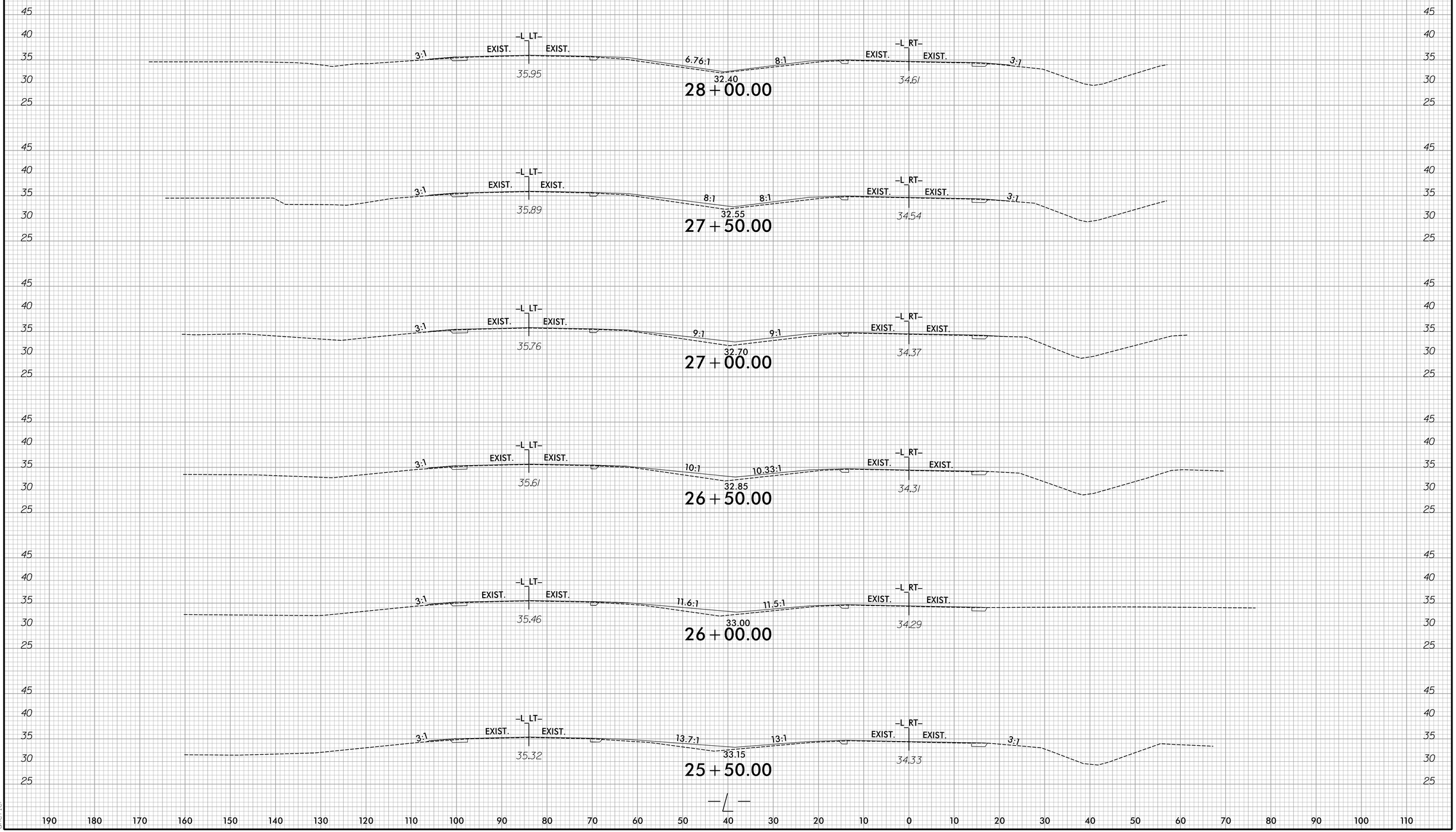

10/19/2021
R:\Roadway\XSC\W-5601GA_Rdy_xpl_L.dgn
aheifer

6/23/16

0 5 10	PROJ. REFERENCE NO.	SHEET NO.
	W-5601GA	X-6

190 180 170 160 150 140 130 120 110 100 90 80 70 60 50 40 30 20 10 0 10 20 30 40 50 60 70 80 90 100 110

45 40 35 30 25

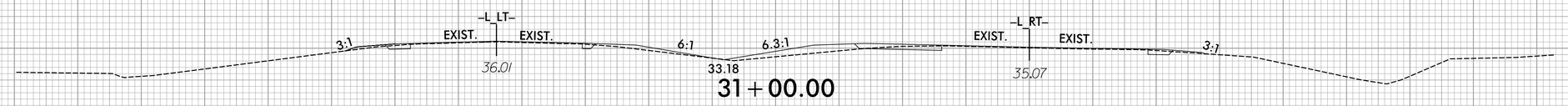

31 + 00.00

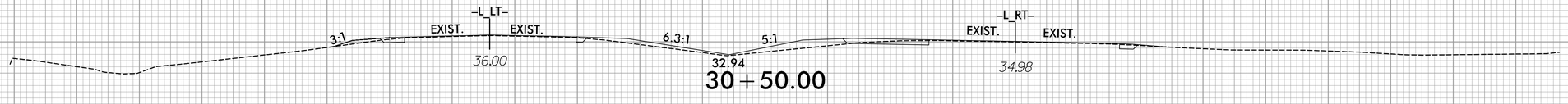

30 + 50.00

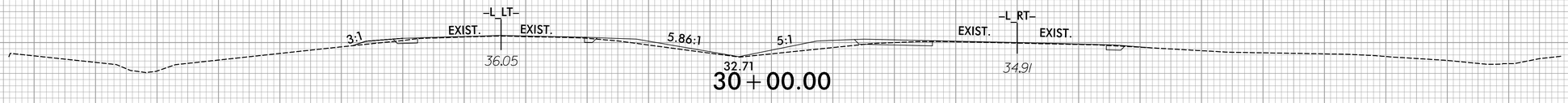

30 + 00.00

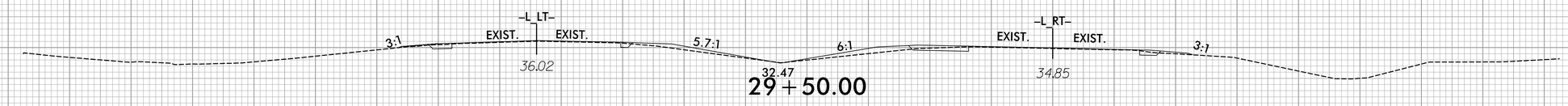

29 + 50.00

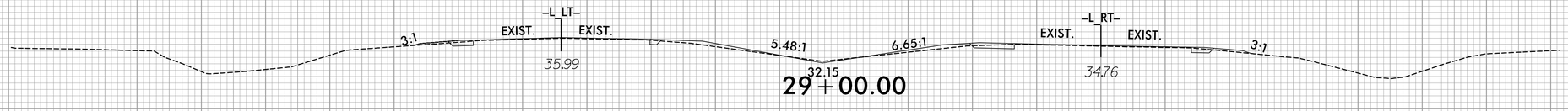

29 + 00.00

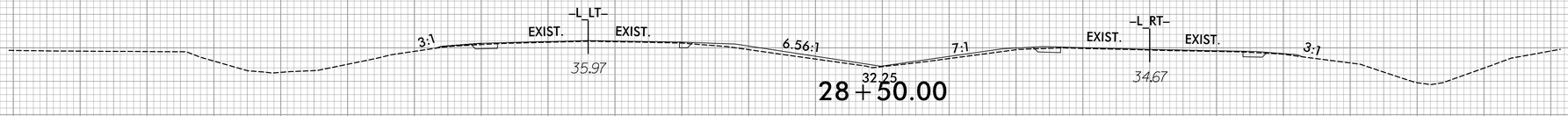

28 + 50.00

—L—

10/19/2021
R:\Roadway\XSC\W-5601GA_Rdy_xpl_L.dgn
shelter

0 5 10	PROJ. REFERENCE NO.	SHEET NO.
	W-5601GA	X-7

190 180 170 160 150 140 130 120 110 100 90 80 70 60 50 40 30 20 10 0 10 20 30 40 50 60 70 80 90 100 110

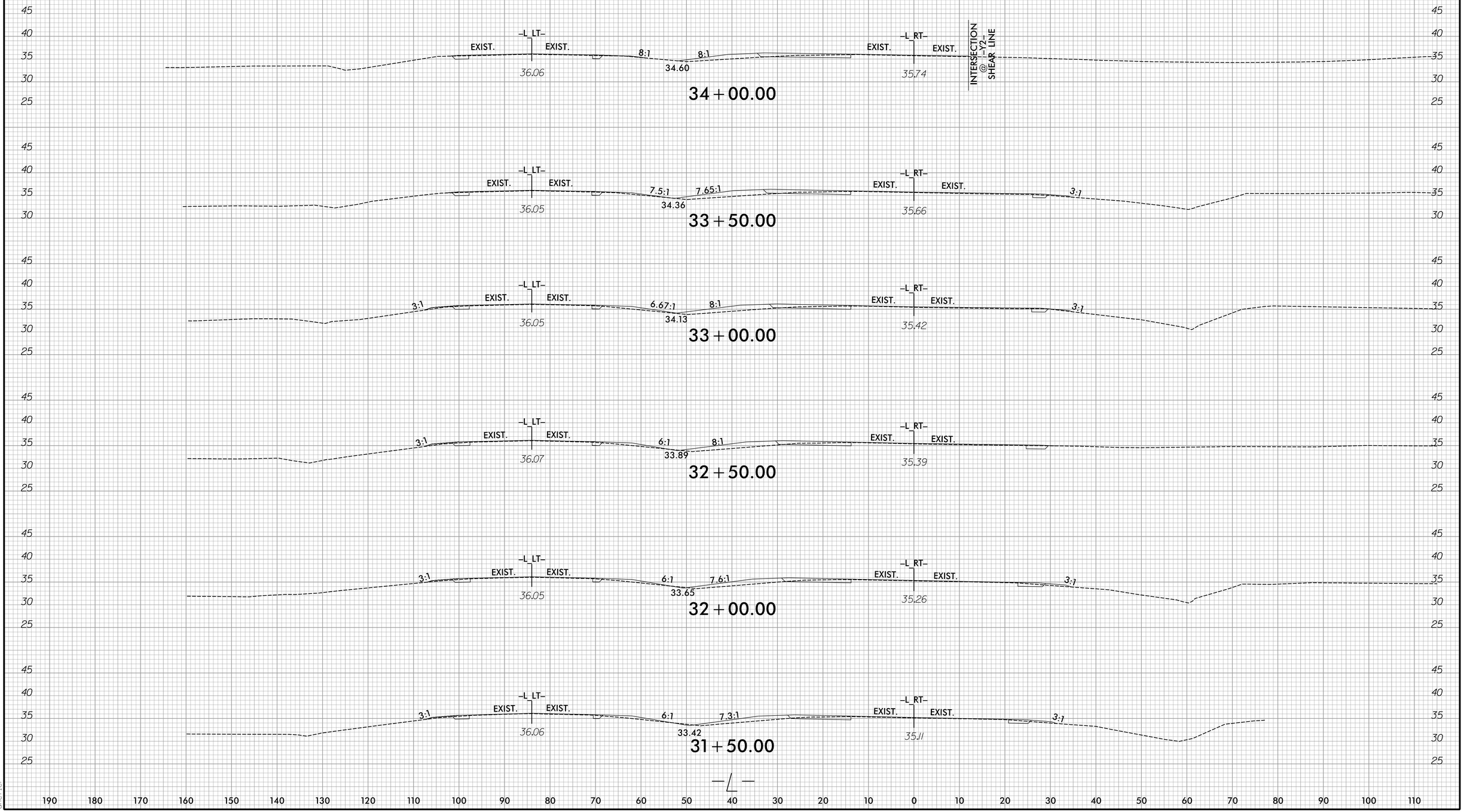

0 5 10	PROJ. REFERENCE NO.	SHEET NO.
	W-5601GA	X-8

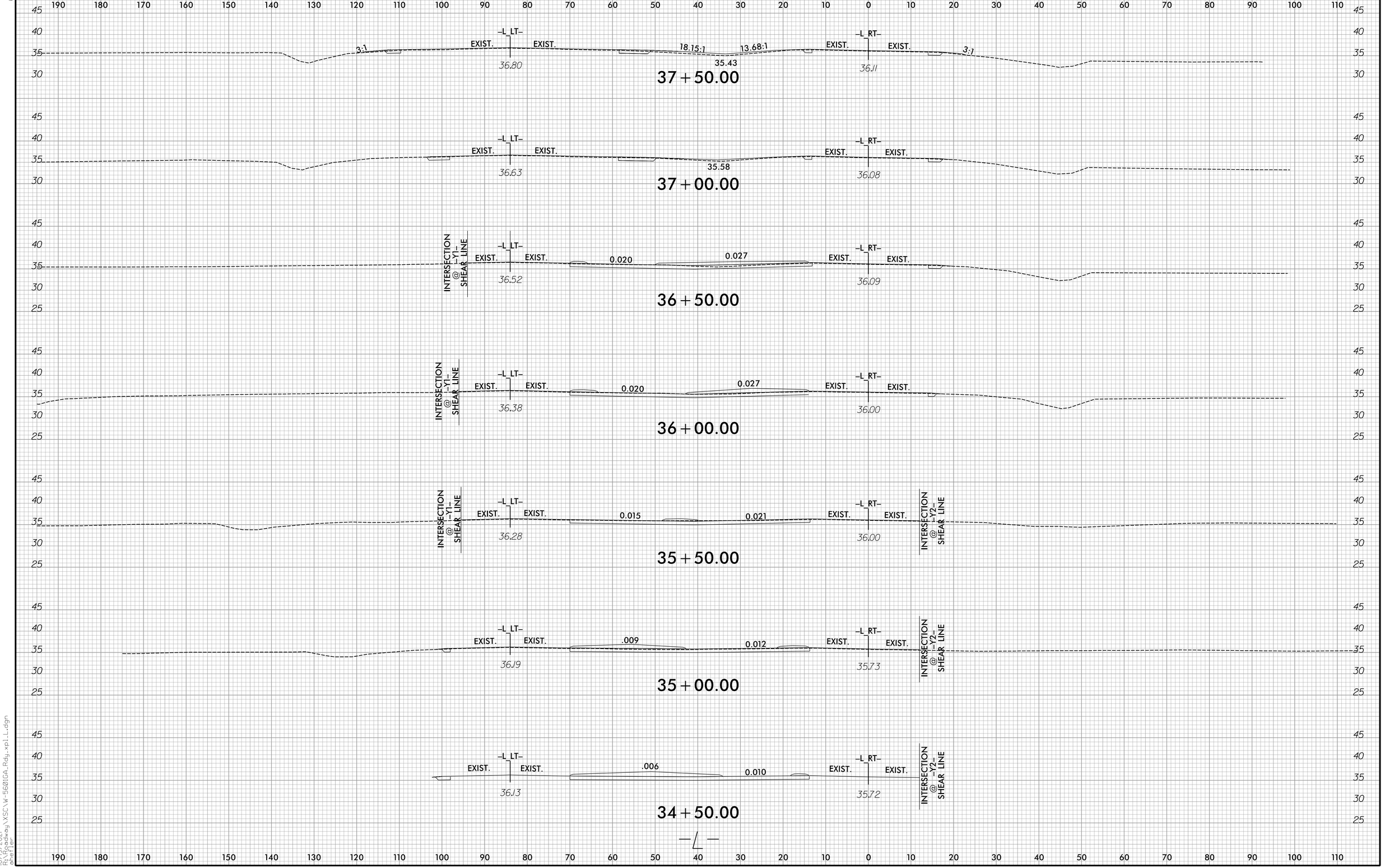

6/23/16

0 5 10	PROJ. REFERENCE NO.	SHEET NO.
	W-5601GA	X-9

190 180 170 160 150 140 130 120 110 100 90 80 70 60 50 40 30 20 10 0 10 20 30 40 50 60 70 80 90 100 110

45 40 35 30

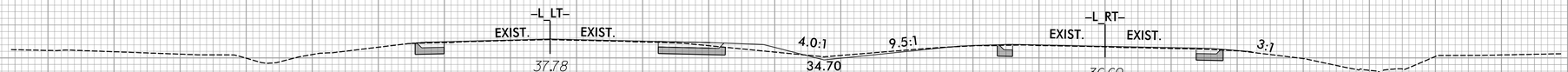

41+00.00

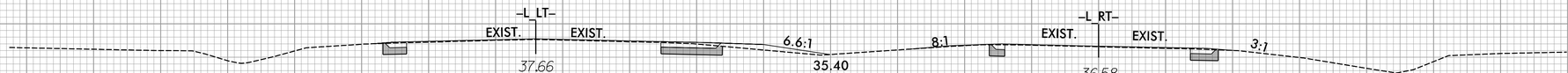

40+50.00

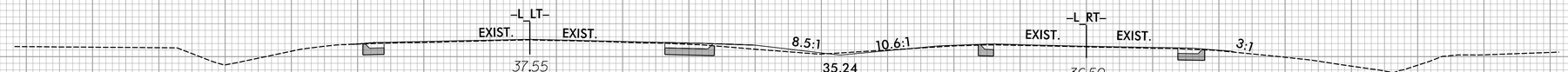

40+00.00

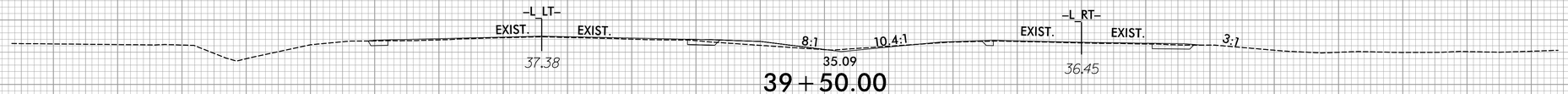

39+50.00

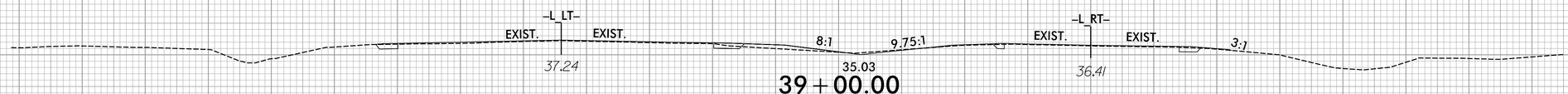

39+00.00

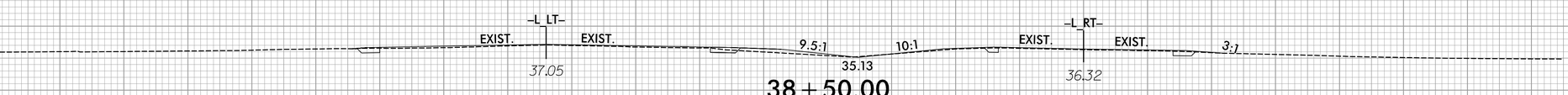

38+50.00

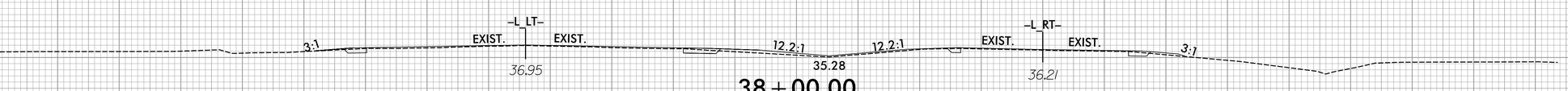

38+00.00

10/19/2021
R:\Roadway\XSC\W-5601GA_Rdy_xpl_L.dgn
aheller

6/23/16

0 5 10	PROJ. REFERENCE NO.	SHEET NO.
	W-5601GA	X-10

190 180 170 160 150 140 130 120 110 100 90 80 70 60 50 40 30 20 10 0 10 20 30 40 50 60 70 80 90 100 110

45 40 35 30

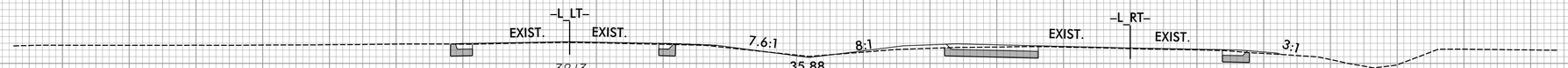

44+50.00

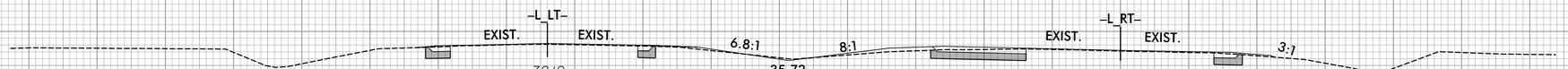

44+00.00

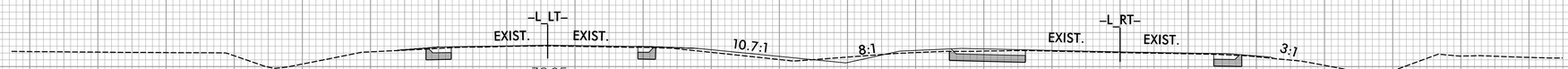

43+50.00

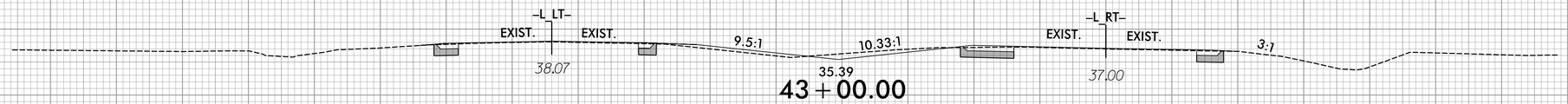

43+00.00

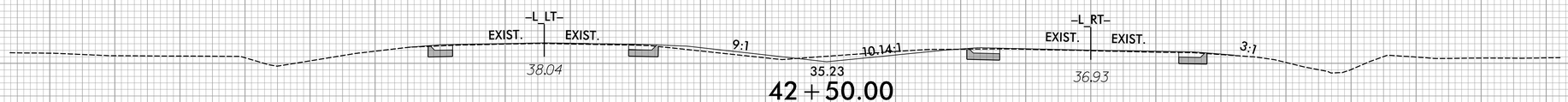

42+50.00

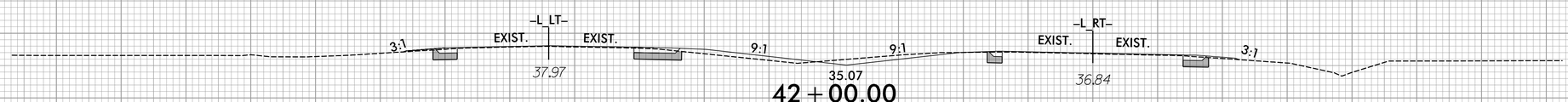

42+00.00

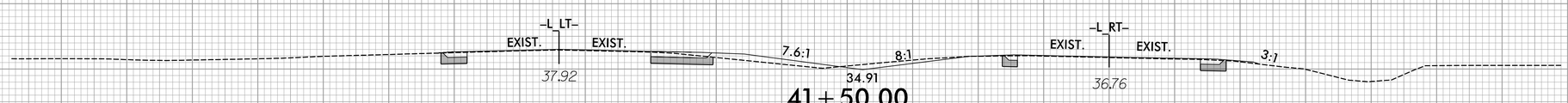

41+50.00

10/19/2021
R:\Roadway\XSC\W-5601GA_Rdy_xpl_L.dgn
aheller

6/23/16

0 5 10	PROJ. REFERENCE NO.	SHEET NO.
	W-5601GA	X-11

190 180 170 160 150 140 130 120 110 100 90 80 70 60 50 40 30 20 10 0 10 20 30 40 50 60 70 80 90 100 110

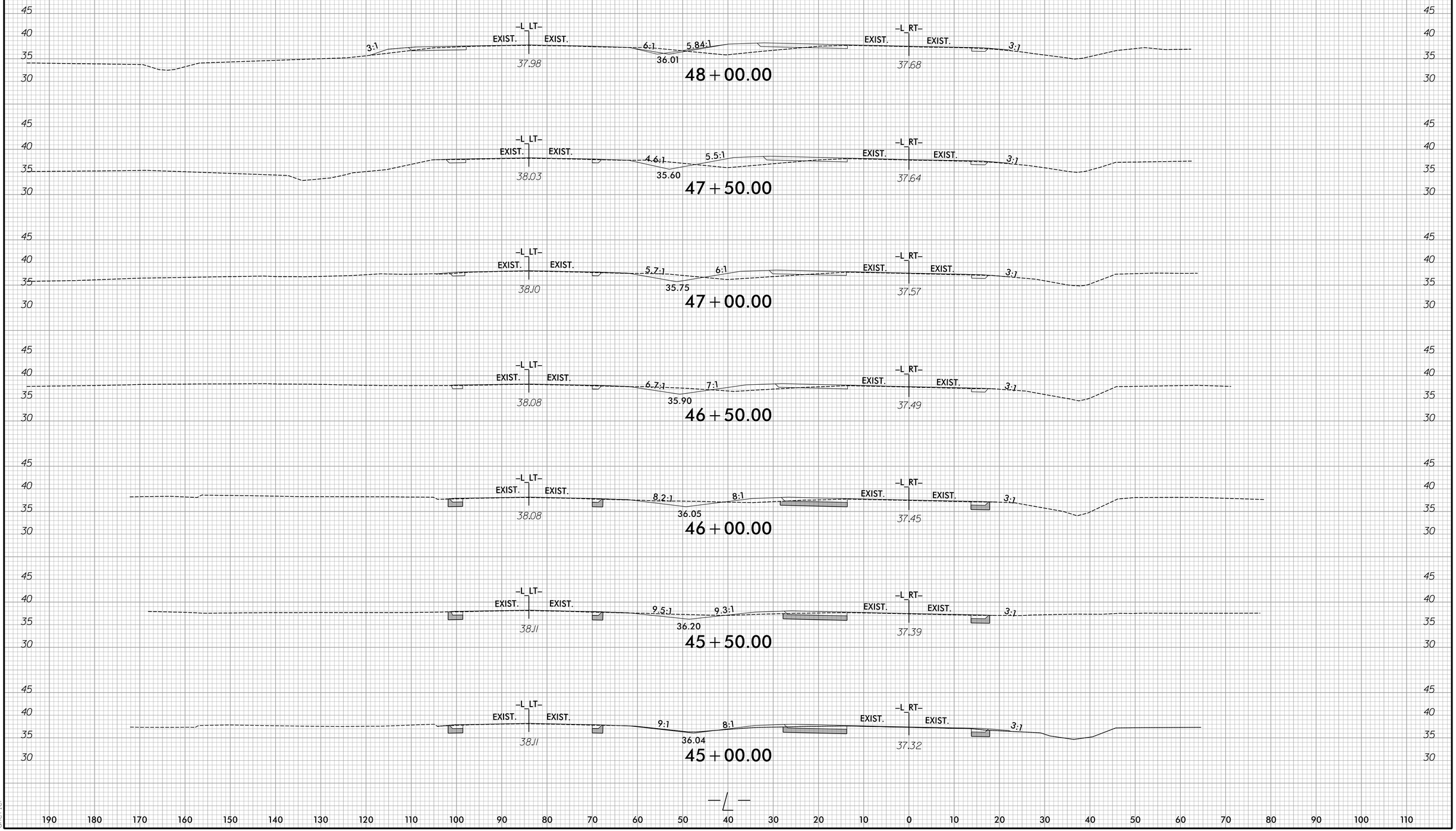

10/19/2021
R:\Roadway\XSC\W-5601GA_Rdy_xpl_L.dgn
aneller

190 180 170 160 150 140 130 120 110 100 90 80 70 60 50 40 30 20 10 0 10 20 30 40 50 60 70 80 90 100 110

6/23/16

0 5 10	PROJ. REFERENCE NO.	SHEET NO.
	W-5601GA	X-12

190 180 170 160 150 140 130 120 110 100 90 80 70 60 50 40 30 20 10 0 10 20 30 40 50 60 70 80 90 100 110

45 40 35 30

37.92 38.23

51+50.00

45 40 35 30

37.92 38.16

51+00.00

45 40 35 30

–L_LT– –L_RT–

3:1 EXIST. EXIST. 8:1 8:1 EXIST. EXIST. 3:1

37.93 38.04

50+50.00

45 40 35 30

–L_LT– –L_RT–

3:1 EXIST. EXIST. 8:1 8:1 EXIST. EXIST. 3:1

37.89 37.93

50+00.00

45 40 35 30

–L_LT– –L_RT–

3:1 EXIST. EXIST. 0.010 0.029 EXIST. EXIST. 3:1

37.93 37.84

49+50.00

45 40 35 30

–L_LT– –L_RT–

3:1 EXIST. EXIST. 8:1 0.020 EXIST. EXIST. 3:1

37.91 37.80

49+00.00

45 40 35 30

–L_LT– –L_RT–

3:1 EXIST. EXIST. 9.5:1 8.5:1 0.002 EXIST. EXIST. 3:1

38.02 36.42 37.76

48+50.00

—L—

190 180 170 160 150 140 130 120 110 100 90 80 70 60 50 40 30 20 10 0 10 20 30 40 50 60 70 80 90 100 110

10/19/2021
R:\Roadway\XSC\W-5601GA_Rdy_xpl_L.dgn
aheller

6/23/16

0 5 10	PROJ. REFERENCE NO.	SHEET NO.
	W-5601GA	X-13

150 140 130 120 110 100 90 80 70 60 50 40 30 20 10 0 10 20 30 40 50 60 70 80 90 100 110 120 130 140 150

40
35
30
25

EXIST. EXIST.

35.45

12+00.00

EXIST. EXIST.

35.48

11+75.00

EXIST. EXIST.

35.50

11+50.00

EXIST.

35.65

11+25.00

EXIST.

35.84

11+00.00

—Y1—

10/19/2021
R:\Roadway\XSC\W-5601GA_Rdy_xpl_Y1.dgn
aheifer

6/23/16

0 5 10	PROJ. REFERENCE NO.	SHEET NO.
	W-5601GA	X-14

150 140 130 120 110 100 90 80 70 60 50 40 30 20 10 0 10 20 30 40 50 60 70 80 90 100 110 120 130 140 150

40
35
30
25

EXIST.

35.39

14+00.00

EXIST. EXIST.

35.85

13+75.00

EXIST. EXIST.

36.18

13+50.00

EXIST. EXIST.

36.31

13+25.00

EXIST. EXIST.

36.19

13+00.00

35.91

12+75.00

-Y2-

10/19/2021
R:\Roadway\XSC\W-5601GA_Rdy_xpl_Y2.dgn
aheller