WBS # 17BP.4.R.52

CONTRACT #

12/4/2014 11:02:09 AM R:\Structures\Nash 32_SD_GD_01.dgn

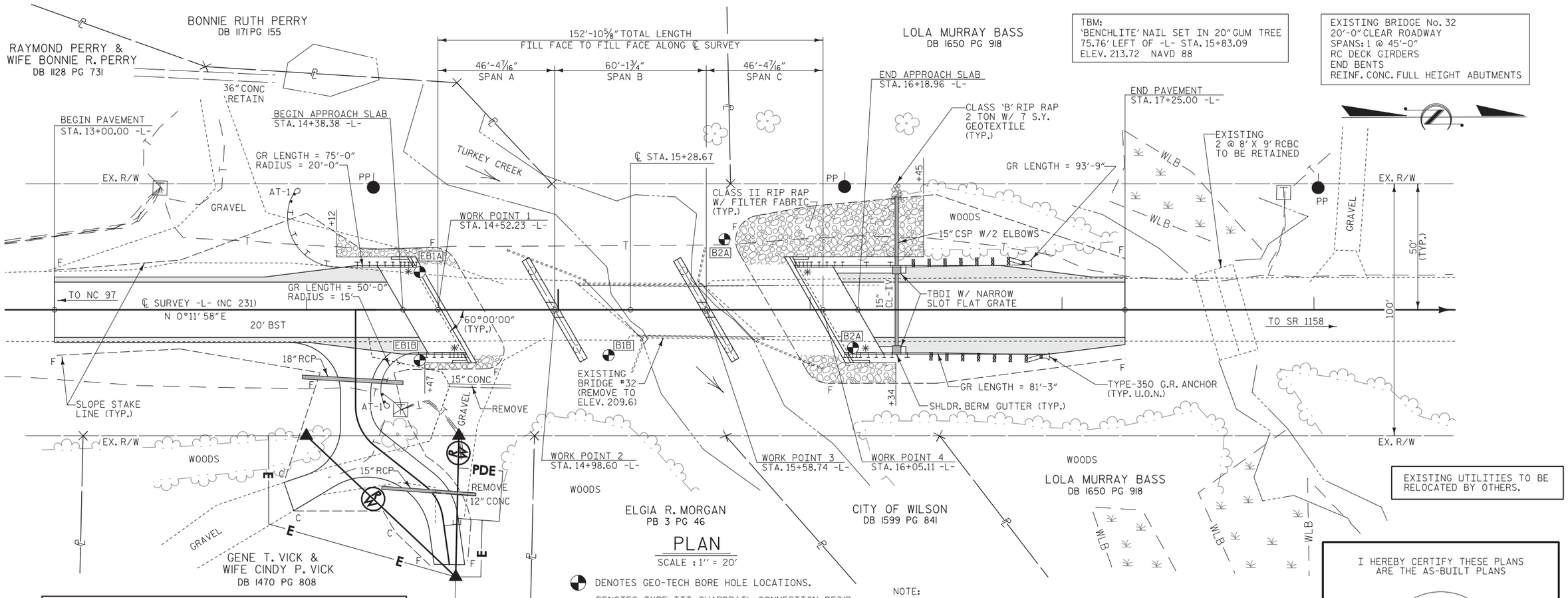

TBM:
'BENCHLITE' NAIL SET IN 20" GUM TREE
75.76' LEFT OF -L- STA. 15+83.09
ELEV. 213.72 NAVD 88

EXISTING BRIDGE No. 32
20'-0" CLEAR ROADWAY
SPANS: 1 @ 45'-0"
RC DECK GIRDERS
END BENTS
REINF. CONC. FULL HEIGHT ABUTMENTS

EXISTING UTILITIES TO BE RELOCATED BY OTHERS.

PLAN

SCALE : 1" = 20'

PI = 14+15.00	PI = 16+75.00
EL = 224.42'	EL = 221.92'
VC = 140'	VC = 60'
K = 132	K = 126
D.S. = 55 mph	D.S. = 55 mph
(-)2.0252% (-)0.9616%	(-)0.9616% (-)0.4869%

GRADE DATA
-L- (NC 231)

DENOTES GEO-TECH BORE HOLE LOCATIONS.

DENOTES TYPE III GUARDRAIL CONNECTION REQ'D. SEE "GUARDRAIL ANCHORAGE FOR VERTICAL CONCRETE BARRIER RAIL" SHEET.

NOTE: GUARDRAIL LENGTHS AS SHOWN INCLUDE ANCHOR UNITS.

FOR PAVEMENT LAYOUT & EASEMENT LAYOUT SEE "ROADWAY DETAILS" SHEET 1 OF 2.

FOR DRIVEWAY LAYOUT SEE "ROADWAY DETAILS" SHEET 2 OF 2.

NOTE:

ACTUAL INVERT ELEVATIONS SHALL BE DETERMINED BY THE CONTRACTOR.

RIP RAP CLASS II (2'-0" THICK)

END BENT No. 1	101 TONS
END BENT No. 2	285 TONS
TOTAL	386 TONS

GEOTEXTILE FOR DRAINAGE

END BENT No. 1	113 SQ. YARDS
END BENT No. 2	317 SQ. YARDS
TOTAL	430 SQ. YARDS

I HEREBY CERTIFY THESE PLANS ARE THE AS-BUILT PLANS

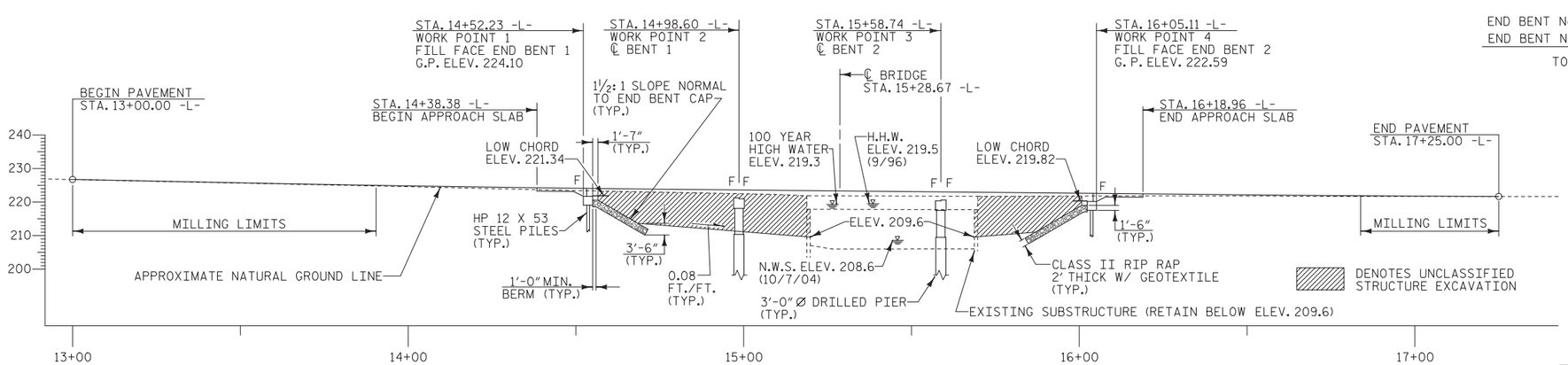

PROFILE ALONG ℄ SURVEY

SCALE : 1" = 20'

F = FIXED END

PROJECT NO. 17BP.4.R.52

NASH COUNTY

STATION: 15+28.67 -L-

REPLACES BRIDGE NO. 32 SHEET 1 OF 2

STATE OF NORTH CAROLINA
DEPARTMENT OF TRANSPORTATION
RALEIGH

GENERAL DRAWING

BRIDGE ON NC 231
OVER TURKEY CREEK
BETWEEN NC 97 & SR 1158

33'-10" CLEAR ROADWAY - 60° SKEW

NORTH CAROLINA PROFESSIONAL SEAL ENGINEER KEVIN AUSTIN 19661 12/3/14

PLANS PREPARED BY:

MULKEY ENGINEERS & CONSULTANTS
PO Box 33127
RALEIGH, N.C. 27636
(919) 851-1912
(919) 851-1918 (FAX)
WWW.MULKEYINC.COM
NC LICENSE NO. C-1081

REVISIONS						SHEET NO.
NO.	BY:	DATE:	NO.	BY:	DATE:	1
1			3			TOTAL SHEETS
2			4			36

DRAWN BY : W. B. ALLEN DATE : 6/13
CHECKED BY : L. K. AUSTIN DATE : 8/13

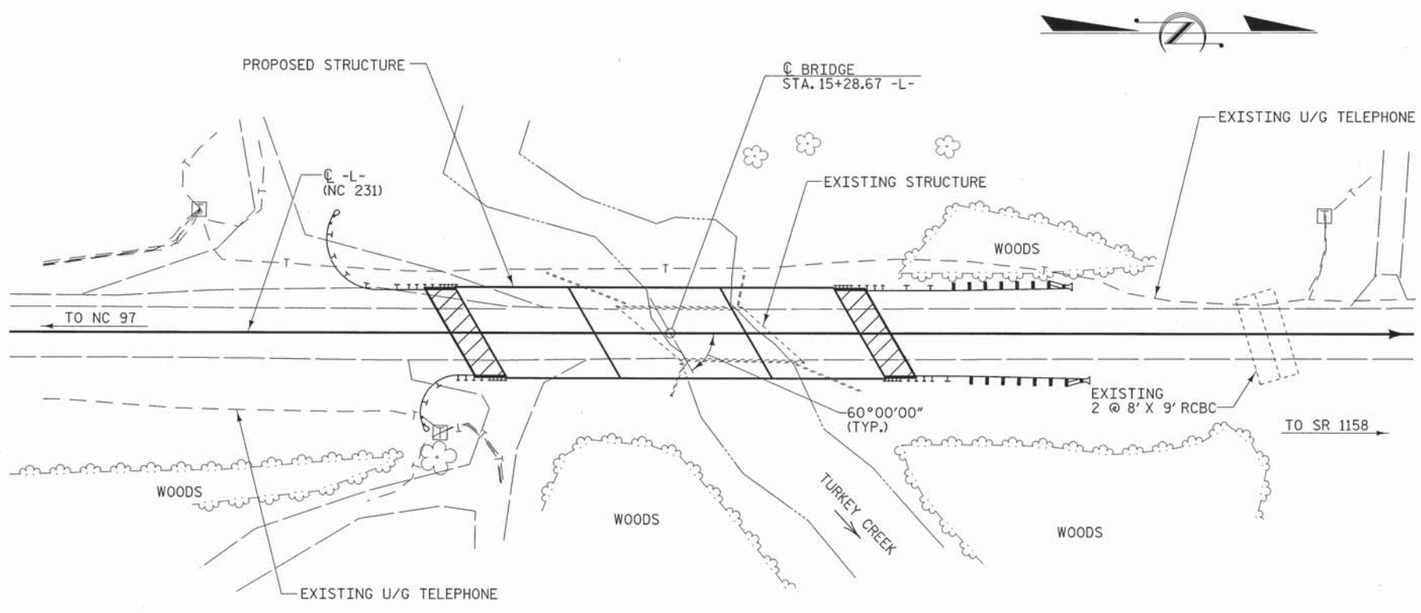

LOCATION SKETCH

TOTAL BILL OF MATERIAL

	REMOVAL OF EXISTING STRUCTURE	PILE EXCAVATION IN SOIL	3'-0" DIA. DRILLED PIERS IN SOIL	3'-0" DIA. DRILLED PIERS NOT IN SOIL	PERMANENT STEEL CASING FOR 3'-0" DIA. DRILLED PIERS	SID INSPECTION	SPT TESTING	CSL TESTING	UNCLASSIFIED STRUCTURE EXCAVATION	CONCRETE WEARING SURFACE	GROOVING BRIDGE FLOORS	CLASS A CONCRETE	BRIDGE APPROACH SLABS
	LUMP SUM	LIN. FT.	LIN. FT.	LIN. FT.	LIN. FT.	EACH	EACH	EACH	LUMP SUM	SQ. FEET	SQ. FEET	CU. YARDS	LUMP SUM
SUPERSTRUCTURE	LUMP SUM									5085	5532		LUMP SUM
END BENT 1		80							LUMP SUM			16.8	
BENT 1			55.2	30	31.2							22.4	
BENT 2			52.8	36	40.8							22.5	
END BENT 2		100							LUMP SUM			16.8	
TOTAL	LUMP SUM	180	108.0	66	72.0	1	1	2	LUMP SUM	5085	5532	78.5	LUMP SUM

TOTAL BILL OF MATERIAL

	REINFORCING STEEL	SPIRAL COLUMN REINFORCING STEEL	HP 12 X 53 STEEL PILES		STEEL PILE POINTS	VERTICAL CONCRETE BARRIER RAIL	RIP RAP CLASS II (2'-0" THICK)	GEOTEXTILE FOR DRAINAGE	ELASTOMERIC BEARINGS	3'-0" X 1'-9" PRESTRESSED CONCRETE CORED SLABS		3'-0" X 2'-0" PRESTRESSED CONCRETE CORED SLABS	
	LBS.	LBS.	NO.	LIN. FT.	NO.	LIN. FT.	TONS	SQ. YARDS	LUMP SUM	NO.	LIN. FT.	NO.	LIN. FT.
SUPERSTRUCTURE						300.87			LUMP SUM	24	1080.00	12	720.00
END BENT 1	2623		7	125	7		101	113					
BENT 1	11797	1900											
BENT 2	12010	1972											
END BENT 2	2623		7	140	7		285	317					
TOTAL	29053	3872	14	265	14	300.87	386	430	LUMP SUM	24	1080.00	12	720.00

DRAWN BY : W. B. ALLEN DATE : 6/13
CHECKED BY : W. A. DAVIS DATE : 10/13

NOTES

ASSUMED LIVE LOAD = HL-93 OR ALTERNATE LOADING.

THIS BRIDGE HAS BEEN DESIGNED IN ACCORDANCE WITH THE AASHTO LRFD BRIDGE DESIGN SPECIFICATIONS.

THIS BRIDGE IS LOCATED IN SEISMIC ZONE 1.

FOR EROSION CONTROL MEASURES SEE EROSION CONTROL PLANS.

FOR OTHER DESIGN DATA AND GENERAL NOTES, SEE SHEET SN.

REMOVAL OF THE EXISTING BRIDGE SHALL BE PERFORMED SO AS NOT TO ALLOW DEBRIS TO FALL INTO THE WATER. THE CONTRACTOR SHALL REMOVE THE BRIDGE AND SUBMIT PLANS FOR THE DEMOLITION IN ACCORDANCE WITH ARTICLE 402-2 OF THE STANDARD SPECIFICATIONS.

THE MATERIAL SHOWN ON SHEET 1 IN THE CROSS-HATCHED AREA SHALL BE EXCAVATED FOR A DISTANCE OF 25 FT. EACH SIDE OF CENTERLINE ROADWAY AS DIRECTED BY THE ENGINEER. THIS WORK WILL BE PAID FOR AT THE CONTRACT LUMP SUM PRICE FOR UNCLASSIFIED STRUCTURE EXCAVATION.

THE SUBSTRUCTURE OF THE EXISTING BRIDGE INDICATED ON THE PLANS IS FROM THE BEST INFORMATION AVAILABLE. SINCE THIS INFORMATION IS SHOWN FOR THE CONVENIENCE OF THE CONTRACTOR, THE CONTRACTOR SHALL HAVE NO CLAIM WHATSOEVER AGAINST THE DEPARTMENT OF TRANSPORTATION FOR ANY DELAYS OR ADDITIONAL COST INCURRED BASED ON DIFFERENCES BETWEEN THE EXISTING BRIDGE SUBSTRUCTURE SHOWN ON THE PLANS AND THE ACTUAL CONDITIONS AT THE PROJECT SITE.

THIS STRUCTURE HAS BEEN DESIGNED IN ACCORDANCE WITH "HEC 18 - EVALUATING SCOUR AT BRIDGES".

FOR PILES, SEE SECTION 450 OF THE STANDARD SPECIFICATIONS.

PILES AT END BENTS NO. 1 AND 2 ARE DESIGNED FOR A FACTORED RESISTANCE OF 75 TONS PER PILE.

DRIVE PILES AT END BENTS NO. 1 AND 2 TO A REQUIRED DRIVING RESISTANCE OF 125 TONS PER PILE.

MONITOR VIBRATIONS DURING PILE DRIVING. FOR VIBRATION MONITORING SEE SPECIAL PROVISIONS.

PILE EXCAVATION MAY BE REQUIRED TO INSTALL PILES AT END BENT NO. 1. IF REQUIRED, EXCAVATE HOLES AT PILE LOCATIONS TO ELEVATION 195 FEET (LEFT SIDE) TO ELEVATION 210 FEET (RIGHT SIDE). FOR PILE EXCAVATION SEE SECTION 450 OF THE STANDARD SPECIFICATIONS.

PILE EXCAVATION MAY BE REQUIRED TO INSTALL PILES AT END BENT NO. 2. IF REQUIRED, EXCAVATE HOLES AT PILE LOCATIONS TO ELEVATION 194 FEET (LEFT SIDE) TO ELEVATION 202 FEET (RIGHT SIDE). FOR PILE EXCAVATION SEE SECTION 450 OF THE STANDARD SPECIFICATIONS.

FOR DRILLED PIERS, SEE SECTION 411 OF THE STANDARD SPECIFICATIONS.

DRILLED PIERS AT BENT NO. 1 ARE DESIGNED FOR A FACTORED RESISTANCE OF 395 TONS PER PIER. CHECK FIELD CONDITIONS FOR THE REQUIRED TIP RESISTANCE OF 30 TSF.

DRILLED PIERS AT BENT NO. 2 ARE DESIGNED FOR A FACTORED RESISTANCE OF 395 TONS PER PIER. CHECK FIELD CONDITIONS FOR THE REQUIRED TIP RESISTANCE OF 65 TSF.

PERMANENT STEEL CASINGS MAY BE REQUIRED FOR DRILLED PIERS AT BENT NO. 1. IF REQUIRED, DO NOT EXTEND PERMANENT STEEL CASINGS BELOW ELEVATION 200 FT. WITHOUT PRIOR APPROVAL FROM THE ENGINEER. THE ENGINEER WILL DETERMINE THE NEED FOR PERMANENT CASINGS.

PERMANENT STEEL CASINGS ARE REQUIRED FOR DRILLED PIERS AT BENT NO. 2. DO NOT EXTEND PERMANENT STEEL CASINGS BELOW ELEVATION 196 FT. WITHOUT PRIOR APPROVAL FROM THE ENGINEER.

INSTALL DRILLED PIERS AT BENT NO. 1 TO A TIP ELEVATION NO HIGHER THAN 182 FT. WITH THE REQUIRED TIP RESISTANCE.

INSTALL DRILLED PIERS AT BENT NO. 2 TO A TIP ELEVATION NO HIGHER THAN 180 FT. WITH THE REQUIRED TIP RESISTANCE.

THE SCOUR CRITICAL ELEVATION FOR BENT NO. 1 IS ELEVATION 199 FT. SCOUR CRTICAL ELEVATIONS ARE USED TO MONITOR POSSIBLE SCOUR PROBLEMS DURING THE LIFE OF THE STRUCTURE.

THE SCOUR CRITICAL ELEVATION FOR BENT NO. 2 IS ELEVATION 195 FT. SCOUR CRTICAL ELEVATIONS ARE USED TO MONITOR POSSIBLE SCOUR PROBLEMS DURING THE LIFE OF THE STRUCTURE.

SPT MAY BE REQUIRED FOR DRILLED PIERS AT BENT NO. 1. THE ENGINEER WILL DETERMINE THE NEED FOR SPT. FOR SPT TESTING, SEE SECTION 411 OF THE STANDARD SPECIFICATIONS.

SID INSPECTIONS MAY BE REQUIRED FOR DRILLED PIERS AT BENTS NO. 1 AND 2. THE ENGINEER WILL DETERMINE THE NEED FOR SID INSPECTIONS. FOR SID INSPECTIONS, SEE SECTION 411 OF THE STANDARD SPECIFICATIONS.

CSL TUBES ARE REQUIRED AND CSL TESTING MAY BE REQUIRED FOR DRILLED PIERS. THE ENGINEER WILL DETERMINE THE NEED FOR FOR CSL TESTING. FOR CSL TESTING, SEE SECTION 411 OF THE STANDARD SPECIFICATIONS.

ADT = 1200 FOR YEAR 2010.

ROADWAY APPROACH EMBANKMENT SHALL BE WIDENED AS NECESSARY FOR GUARDRAIL INSTALLATION.

FOR SUBMITTAL OF WORKING DRAWINGS, SEE SPECIAL PROVISIONS.

FOR FALSEWORK AND FORMWORK, SEE SPECIAL PROVISIONS.

FOR CRANE SAFETY, SEE SPECIAL PROVISIONS.

FOR GROUT FOR STRUCTURES, SEE SPECIAL PROVISIONS.

NO DECK DRAINS REQUIRED.

HYDROGRAPHIC DATA:

DESIGN DISCHARGE -	3900 CFS
FREQUENCY OF DESIGN FLOOD -	50 YEAR
DESIGN HIGH WATER ELEVATION -	218.4
DRAINAGE AREA -	19.2 SQ. MI.
BASE DISCHARGE (Q 100) -	4700 CFS
BASE HIGH WATER ELEVATION -	219.3

OVERTOPPING FLOOD DATA:

OVERTOPPING DISCHARGE -	5000 CFS
FREQUENCY OF OVERTOPPING FLOOD -	100+ YEAR
OVERTOPPING FLOOD ELEVATION -	219.7

NORTH CAROLINA PROFESSIONAL SEAL 19661 ENGINEER KEVIN AUSTIN 11/15/13

PLANS PREPARED BY:
MULKEY ENGINEERS & CONSULTANTS
PO Box 33127 Raleigh, N.C. 27636
(919) 851-1912
(919) 851-1918 (FAX)
WWW.MULKEYINC.COM
NC LICENSE NO. C-1021

PROJECT NO. 17BP.4.R.52
NASH COUNTY
STATION: 15+28.67 -L-

REPLACES BRIDGE NO. 32 SHEET 2 OF 2

STATE OF NORTH CAROLINA
DEPARTMENT OF TRANSPORTATION
RALEIGH

GENERAL DRAWING

BRIDGE ON NC 231
OVER TURKEY CREEK
BETWEEN NC 97 & SR 1158

33'-10" CLEAR ROADWAY - 60° SKEW

REVISIONS						SHEET NO.
NO.	BY:	DATE:	NO.	BY:	DATE:	2
1			3			TOTAL SHEETS
2			4			36

6/14/2013 3:34:45 PM R:\Structures\Nash 32_50_GD_02.dgn

LOAD AND RESISTANCE FACTOR RATING (LRFD) SUMMARY FOR PRESTRESSED CONCRETE CORED SLAB UNITS

LEVEL		VEHICLE	WEIGHT (W) (TONS)	CONTROLLING LOAD RATING	MINIMUM RATING FACTORS (RF)	TONS = W X RF	STRENGTH I LIMIT STATE											SERVICE III LIMIT STATE						COMMENT NUMBER
								MOMENT					SHEAR						MOMENT					
							LIVELOAD FACTORS	DISTRIBUTION FACTORS (DF)	RATING FACTOR	SPAN	GIRDER LOCATION	DISTANCE FROM LEFT END OF SPAN (ft)	DISTRIBUTION FACTORS (DF)	RATING FACTOR	SPAN	GIRDER LOCATION	DISTANCE FROM LEFT END OF SPAN (ft)	LIVELOAD FACTORS	DISTRIBUTION FACTORS (DF)	RATING FACTOR	SPAN	GIRDER LOCATION	DISTANCE FROM LEFT END OF SPAN (ft)	
DESIGN LOAD RATING		HL-93(Inv)	N/A	1	1.29	--	1.75	0.236	1.59	A & C	EL	22.00	0.547	1.29	A & C	EL	0.00	0.80	0.236	1.68	A & C	EL	22.00	
		HL-93(Opr)	N/A	--	1.67	--	1.35	0.236	2.06	A & C	EL	22.00	0.547	1.67	A & C	EL	0.00	N/A	--	--	--	--	--	
		HS-20(Inv)	36.000	2	1.53	48.973	1.75	0.236	1.95	A & C	EL	22.00	0.547	1.53	A & C	EL	0.00	0.80	0.236	2.08	A & C	EL	22.00	
		HS-20(Opr)	36.000	--	1.98	63.484	1.35	0.236	2.53	A & C	EL	22.00	0.547	1.98	A & C	EL	0.00	N/A	--	--	--	--	--	
LEGAL LOAD RATING	SV	SNSH	13.500	--	4.04	38.783	1.4	0.236	4.76	A & C	EL	22.00	0.547	4.27	A & C	EL	0.00	0.80	0.236	4.04	A & C	EL	22.00	
		SNGARBS2	20.000	--	3.12	46.427	1.4	0.236	3.84	A & C	EL	22.00	0.547	3.12	A & C	EL	0.00	0.80	0.236	3.26	A & C	EL	22.00	
		SNAGRIS2	22.000	--	2.93	50.09	1.4	0.236	3.75	A & C	EL	17.60	0.547	2.93	A & C	EL	0.00	0.80	0.236	3.20	A & C	EL	22.00	
		SNCOTTS3	27.250	--	2.02	39.088	1.4	0.236	2.38	A & C	EL	22.00	0.547	2.14	A & C	EL	0.00	0.80	0.236	2.02	A & C	EL	22.00	
		SNAGGRS4	34.925	--	1.78	44.231	1.4	0.236	2.10	A & C	EL	22.00	0.547	1.83	A & C	EL	0.00	0.80	0.236	1.78	A & C	EL	22.00	
		SNS5A	35.550	--	1.73	43.856	1.4	0.236	2.04	A & C	EL	22.00	0.547	1.89	A & C	EL	0.00	0.80	0.236	1.73	A & C	EL	22.00	
		SNS6A	39.950	--	1.63	46.437	1.4	0.236	1.92	A & C	EL	22.00	0.547	1.75	A & C	EL	0.00	0.80	0.236	1.63	A & C	EL	22.00	
		SNS7B	42.000	--	1.56	46.54	1.4	0.236	1.83	A & C	EL	22.00	0.547	1.76	A & C	EL	0.00	0.80	0.236	1.56	A & C	EL	22.00	
	TTST	TNAGRIT3	33.000	--	2	47.083	1.4	0.236	2.36	A & C	EL	22.00	0.547	2.06	A & C	EL	0.00	0.80	0.236	2.00	A & C	EL	22.00	
		TNT4A	33.075	--	1.98	47.687	1.4	0.236	2.39	A & C	EL	22.00	0.547	1.98	A & C	EL	0.00	0.80	0.236	2.02	A & C	EL	22.00	
		TNT6A	41.600	--	1.7	50.352	1.4	0.236	2.00	A & C	EL	22.00	0.547	1.92	A & C	EL	0.00	0.80	0.236	1.70	A & C	EL	22.00	
		TNT7A	42.000	--	1.73	51.826	1.4	0.236	2.04	A & C	EL	22.00	0.547	1.78	A & C	EL	0.00	0.80	0.236	1.73	A & C	EL	22.00	
		TNT7B	42.000	--	1.69	53.952	1.4	0.236	2.13	A & C	EL	22.00	0.547	1.69	A & C	EL	0.00	0.80	0.236	1.80	A & C	EL	22.00	
		TNAGRIT4	43.000	--	1.63	52.616	1.4	0.236	2.02	A & C	EL	22.00	0.547	1.63	A & C	EL	0.00	0.80	0.236	1.72	A & C	EL	22.00	
		TNAGT5A	45.000	--	1.6	51.23	1.4	0.236	1.88	A & C	EL	22.00	0.547	1.66	A & C	EL	0.00	0.80	0.236	1.60	A & C	EL	22.00	
		TNAGT5B	45.000	3	1.54	50.015	1.4	0.236	1.84	A & C	EL	22.00	0.547	1.54	A & C	EL	0.00	0.80	0.236	1.56	A & C	EL	22.00	

LOAD FACTORS:

DESIGN LOAD RATING FACTORS	LIMIT STATE	γ_{DC}	γ_{DW}
	STRENGTH I	1.25	1.50
	SERVICE III	1.00	1.00

NOTES:

MINIMUM RATING FACTORS ARE BASED ON THE STRENGTH I AND SERVICE III LIMIT STATES.

ALLOWABLE STRESSES FOR SERVICE III LIMIT STATE ARE AS REQUIRED FOR DESIGN.

COMMENTS:

1.
2.
3.
4.

(#) CONTROLLING LOAD RATING

(1) DESIGN LOAD RATING (HL-93)

(2) DESIGN LOAD RATING (HS-20)

(3) LEGAL LOAD RATING **

** SEE CHART FOR VEHICLE TYPE

GIRDER LOCATION

I - INTERIOR GIRDER
EL - EXTERIOR LEFT GIRDER
ER - EXTERIOR RIGHT GIRDER

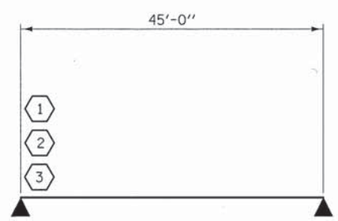

LRFR SUMMARY

FOR SPANS A & C

PROJECT NO. 17BP.4.R.52

NASH COUNTY

STATION: 15+28.67 -L-

THIS STANDARD DRAWING REVIEWED & ADOPTED FOR USE AT THE REFERENCED LOCATION BY THE UNDERSIGNED:

NORTH CAROLINA PROFESSIONAL ENGINEER 19661 KEVIN AUSTIN 11/15/13

PLANS PREPARED BY:

MULKEY ENGINEERS & CONSULTANTS
PO Box 33127 Raleigh, NC 27636
(919) 851-1912
(919) 851-1918 (FAX)
WWW.MULKEYINC.COM
NC LICENSE NO. C-1321

STATE OF NORTH CAROLINA
DEPARTMENT OF TRANSPORTATION
RALEIGH

LRFR SUMMARY FOR 45' CORED SLAB UNIT 60° SKEW (NON-INTERSTATE TRAFFIC)

REVISIONS						SHEET NO.
NO.	BY:	DATE:	NO.	BY:	DATE:	3
1			3			TOTAL SHEETS
2			4			36

ASSEMBLED BY : Z. H. BROWN DATE : 8/5/13
CHECKED BY : W. A. DAVIS DATE : 8/20/13
DRAWN BY : CVC 6/10
CHECKED BY : DNS 6/10

11/14/2013 4:07:38 PM R:\Structures\Nash 32_50_LRFR_OL.dgn

LOAD AND RESISTANCE FACTOR RATING (LRFD) SUMMARY FOR PRESTRESSED CONCRETE CORED SLAB UNITS

LEVEL		VEHICLE	WEIGHT (W) (TONS)	CONTROLLING LOAD RATING	MINIMUM RATING FACTORS (RF)	TONS = W X RF	STRENGTH I LIMIT STATE											SERVICE III LIMIT STATE						COMMENT NUMBER
								MOMENT					SHEAR						MOMENT					
							LIVELOAD FACTORS	DISTRIBUTION FACTORS (DF)	RATING FACTOR	SPAN	GIRDER LOCATION	DISTANCE FROM LEFT END OF SPAN (ft)	DISTRIBUTION FACTORS (DF)	RATING FACTOR	SPAN	GIRDER LOCATION	DISTANCE FROM LEFT END OF SPAN (ft)	LIVELOAD FACTORS	DISTRIBUTION FACTORS (DF)	RATING FACTOR	SPAN	GIRDER LOCATION	DISTANCE FROM LEFT END OF SPAN (ft)	
DESIGN LOAD RATING		HL-93(Inv)	N/A	1	1.28	--	1.75	0.231	1.28	B	EL	29.50	0.543	1.36	B	EL	5.90	0.80	0.231	1.67	B	EL	29.50	
		HL-93(Opr)	N/A	--	1.66	--	1.35	0.231	1.66	B	EL	29.50	0.543	1.81	B	EL	5.90	N/A	--	--	B	--	--	
		HS-20(Inv)	36.000	2	1.62	48.973	1.75	0.231	1.62	B	EL	29.50	0.543	1.69	B	EL	53.10	0.80	0.231	2.11	B	EL	29.50	
		HS-20(Opr)	36.000	--	2.1	63.484	1.35	0.231	2.10	B	EL	29.50	0.543	2.25	B	EL	53.10	N/A	--	--	B	--	--	
LEGAL LOAD RATING	SV	SNSH	13.500	--	4.36	38.783	1.4	0.231	4.36	B	EL	29.50	0.543	5.19	B	EL	0.00	0.80	0.231	4.55	B	EL	29.50	
		SNGARBS2	20.000	--	3.34	46.427	1.4	0.231	3.34	B	EL	29.50	0.543	3.71	B	EL	0.00	0.80	0.231	3.48	B	EL	29.50	
		SNAGRIS2	22.000	--	3.2	50.09	1.4	0.231	3.20	B	EL	29.50	0.543	3.45	B	EL	53.10	0.80	0.231	3.34	B	EL	29.50	
		SNCOTTS3	27.250	--	2.17	39.088	1.4	0.231	2.17	B	EL	29.50	0.543	2.52	B	EL	53.10	0.80	0.231	2.27	B	EL	29.50	
		SNAGGRS4	34.925	--	1.85	44.231	1.4	0.231	1.85	B	EL	29.50	0.543	2.10	B	EL	53.10	0.80	0.231	1.93	B	EL	29.50	
		SNS5A	35.550	--	1.8	43.856	1.4	0.231	1.80	B	EL	29.50	0.543	2.14	B	EL	53.10	0.80	0.231	1.88	B	EL	29.50	
		SNS6A	39.950	--	1.67	46.437	1.4	0.231	1.67	B	EL	29.50	0.543	1.95	B	EL	5.90	0.80	0.231	1.74	B	EL	29.50	
		SNS7B	42.000	--	1.59	46.54	1.4	0.231	1.59	B	EL	29.50	0.543	1.93	B	EL	5.90	0.80	0.231	1.66	B	EL	29.50	
	TTST	TNAGRIT3	33.000	--	2.04	47.083	1.4	0.231	2.04	B	EL	29.50	0.543	2.34	B	EL	5.90	0.80	0.231	2.34	B	EL	29.50	
		TNT4A	33.075	--	2.05	47.687	1.4	0.231	2.05	B	EL	29.50	0.543	2.27	B	EL	5.90	0.80	0.231	2.27	B	EL	29.50	
		TNT6A	41.600	--	1.69	50.352	1.4	0.231	1.69	B	EL	29.50	0.543	2.12	B	EL	5.90	0.80	0.231	2.12	B	EL	29.50	
		TNT7A	42.000	--	1.71	51.826	1.4	0.231	1.71	B	EL	29.50	0.543	2.01	B	EL	53.10	0.80	0.231	2.01	B	EL	29.50	
		TNT7B	42.000	--	1.79	53.952	1.4	0.231	1.79	B	EL	29.50	0.543	1.87	B	EL	5.90	0.80	0.231	1.87	B	EL	29.50	
		TNAGRIT4	43.000	--	1.69	52.616	1.4	0.231	1.69	B	EL	29.50	0.543	1.81	B	EL	53.10	0.80	0.231	1.81	B	EL	29.50	
		TNAGT5A	45.000	--	1.58	51.23	1.4	0.231	1.58	B	EL	29.50	0.543	1.82	B	EL	5.90	0.80	0.231	1.82	B	EL	29.50	
		TNAGT5B	45.000	3	1.56	50.015	1.4	0.231	1.56	B	EL	29.50	0.543	1.71	B	EL	53.10	0.80	0.231	1.71	B	EL	29.50	

LOAD FACTORS:

DESIGN LOAD RATING FACTORS	LIMIT STATE	γ_{DC}	γ_{DW}
	STRENGTH I	1.25	1.50
	SERVICE III	1.00	1.00

NOTES:

MINIMUM RATING FACTORS ARE BASED ON THE STRENGTH I AND SERVICE III LIMIT STATES.

ALLOWABLE STRESSES FOR SERVICE III LIMIT STATE ARE AS REQUIRED FOR DESIGN.

COMMENTS:

1.
2.
3.
4.

⟨#⟩ CONTROLLING LOAD RATING

⟨1⟩ DESIGN LOAD RATING (HL-93)

⟨2⟩ DESIGN LOAD RATING (HS-20)

⟨3⟩ LEGAL LOAD RATING **

** SEE CHART FOR VEHICLE TYPE

GIRDER LOCATION

I - INTERIOR GIRDER
EL - EXTERIOR LEFT GIRDER
ER - EXTERIOR RIGHT GIRDER

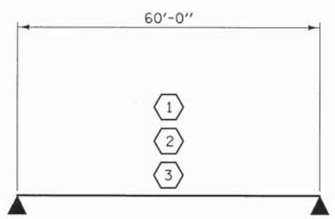

LRFR SUMMARY

FOR SPAN B

PROJECT NO. 17BP.4.R.52

NASH COUNTY

STATION: 15+28.67 -L-

THIS STANDARD DRAWING REVIEWED & ADOPTED FOR USE AT THE REFERENCED LOCATION BY THE UNDERSIGNED:

NORTH CAROLINA PROFESSIONAL SEAL ENGINEER 19661 KEVIN AUSTIN 11/15/13

PLANS PREPARED BY:

MULKEY ENGINEERS & CONSULTANTS
PO Box 33127
Raleigh, N.C. 27636
(919) 851-1912
(919) 851-1918 (FAX)
WWW.MULKEYINC.COM
NC LICENSE NO. C-1321

STATE OF NORTH CAROLINA
DEPARTMENT OF TRANSPORTATION
RALEIGH

LRFR SUMMARY FOR 60' CORED SLAB UNIT 60° SKEW

(NON-INTERSTATE TRAFFIC)

REVISIONS						SHEET NO.
NO.	BY:	DATE:	NO.	BY:	DATE:	4
1			3			TOTAL SHEETS
2			4			36

ASSEMBLED BY : Z. H. BROWN DATE : 8/5/13
CHECKED BY : W. A. DAVIS DATE : 8/20/13
DRAWN BY : CVC 6/10
CHECKED BY : DNS 6/10

11/14/2013 4:06:08 PM R:\Structures\Nash 32_SD_LRFR_02.dgn

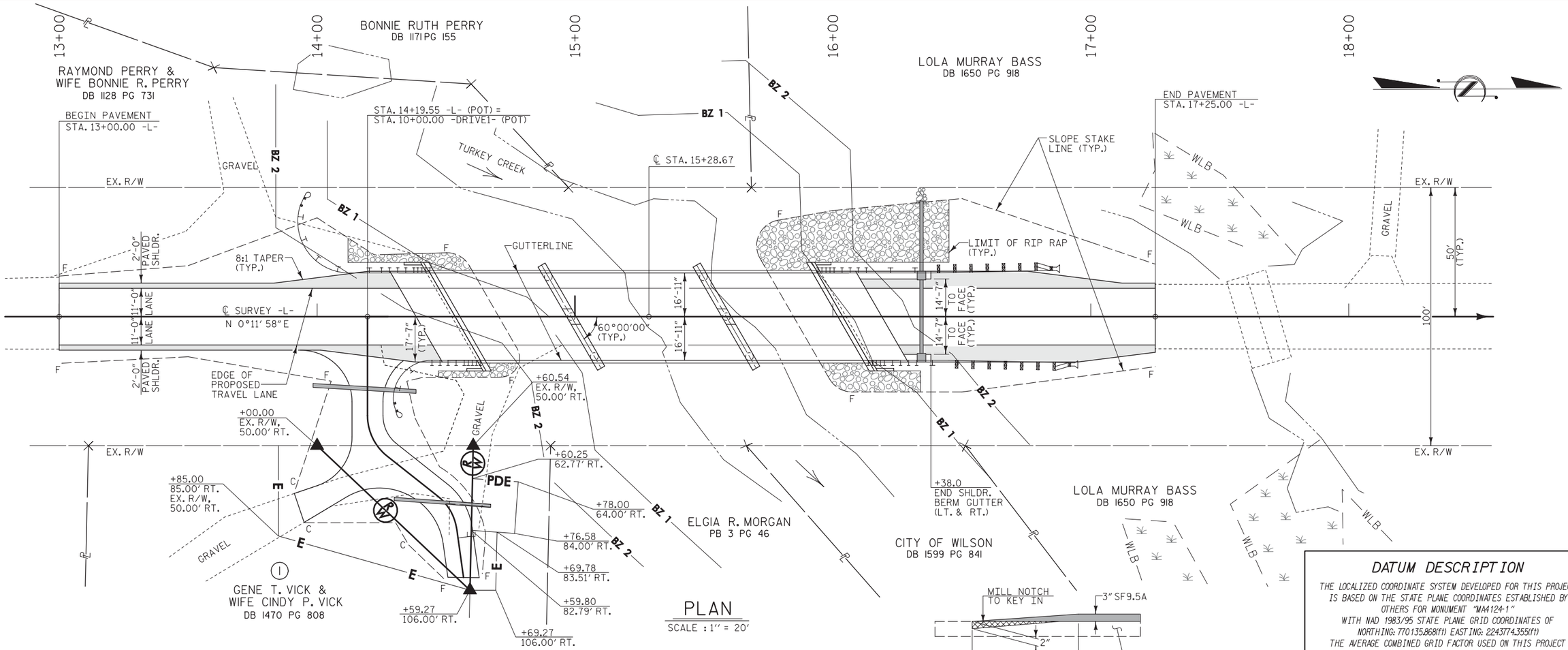

PLAN

SCALE : 1" = 20'

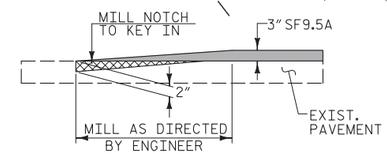

MILLING DETAIL

MILL EXISTING PAVEMENT AT THE FOLLOWING LOCATIONS
-L- STA. 13+00.00 TO STA. 13+90±
-L- STA. 16+83± TO STA. 17+25.00

DATUM DESCRIPTION

THE LOCALIZED COORDINATE SYSTEM DEVELOPED FOR THIS PROJECT IS BASED ON THE STATE PLANE COORDINATES ESTABLISHED BY OTHERS FOR MONUMENT "MA4124-1" WITH NAD 1983/95 STATE PLANE GRID COORDINATES OF NORTHING: 770135.868(ft) EASTING: 2243774.355(ft) THE AVERAGE COMBINED GRID FACTOR USED ON THIS PROJECT (GROUND TO GRID) IS: 0.99992257 THE N.C. LAMBERT GRID BEARING AND LOCALIZED HORIZONTAL GROUND DISTANCE FROM "MA4124-1" TO -L- STATION 13+00.00 IS N 1°28'07" E 673.09' ALL LINEAR DIMENSIONS ARE LOCALIZED HORIZONTAL DISTANCES VERTICAL DATUM USED IS NAVD 88

RIGHT OF WAY AREA DATA

PARCEL NO.	PROPERTY OWNERS NAMES	TOTAL AREA	AREA TAKEN	AREA REMAINING RT.	AREA REMAINING LT.	CONST. EASE.	PERM. DRAIN. EASE.	TEMP. DRAIN. EASE.
1	GENE T. VICK & WIFE CINDY P. VICK	1.24 AC	1695 SF	1.20 AC		1935 SF	347 SF	

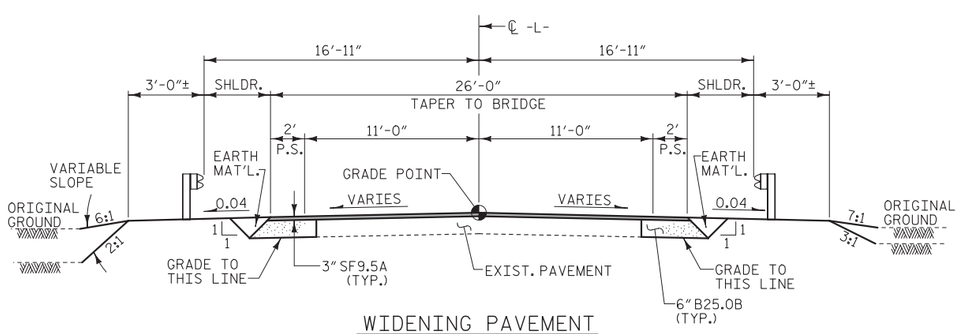

WIDENING PAVEMENT

FROM -L- STA. 13+00.00 TO -L- STA. 14+25
FROM -L- STA. 16+25 TO -L- STA. 17+25.00

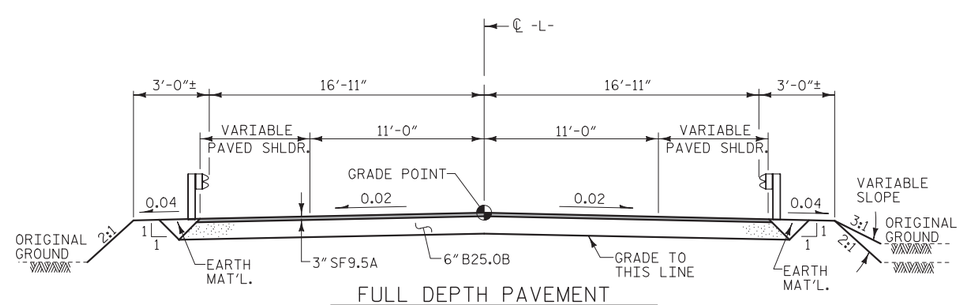

FULL DEPTH PAVEMENT

FROM -L- STA. 14+25 TO BEGIN BRIDGE
FROM END BRIDGE TO -L- STA. 16+25

TYPICAL ROADWAY SECTION

WITHIN CONSTRUCTION LIMITS

PROJECT NO. 17BP.4.R.52
NASH COUNTY
STATION: 15+28.67 -L-

REPLACES BRIDGE NO. 32 SHEET 1 OF 2

STATE OF NORTH CAROLINA
DEPARTMENT OF TRANSPORTATION
RALEIGH

ROADWAY DETAILS

33'-10" CLEAR ROADWAY - 60° SKEW

NORTH CAROLINA PROFESSIONAL SEAL ENGINEER SEAL 19661 KEVIN AUSTIN 12/3/14

PLANS PREPARED BY:
MULKEY ENGINEERS & CONSULTANTS
PO Box 33127
Raleigh, N.C. 27636
(919) 851-1912
(919) 851-1918 (FAX)
WWW.MULKEYINC.COM
NC LICENSE NO. C-1321

REVISIONS						SHEET NO.
NO.	BY:	DATE:	NO.	BY:	DATE:	5
1			3			TOTAL SHEETS
2			4			36

DRAWN BY : W. B. ALLEN DATE : 6/13
CHECKED BY : L. K. AUSTIN DATE : 8/13

12/4/2014 11:00:56 AM R:\Structures\Nash 32_SD_CD_03.dgn

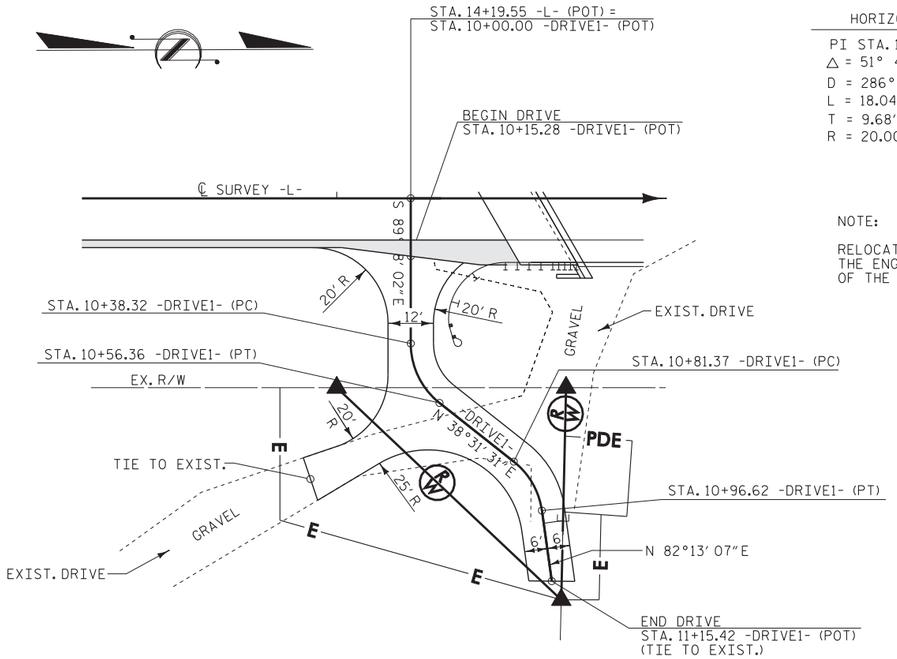

DRIVE 1 DETAIL

SCALE : 1″ = 20′

HORIZONTAL CURVE DATA (-DRIVE1-)

PI STA. 10+48.01	PI STA. 10+89.38
Δ = 51° 40′ 27.2″(LT)	Δ = 43° 41′ 35.7″(RT)
D = 286° 28′ 44.0″	D = 286° 28′ 44.0″
L = 18.04′	L = 15.25′
T = 9.68′	T = 8.02′
R = 20.00′	R = 20.00′

NOTE:

RELOCATE MAILBOXES AS DIRECTED BY THE ENGINEER, SEE SECTION 107-11 OF THE STANDARD SPECIFICATIONS.

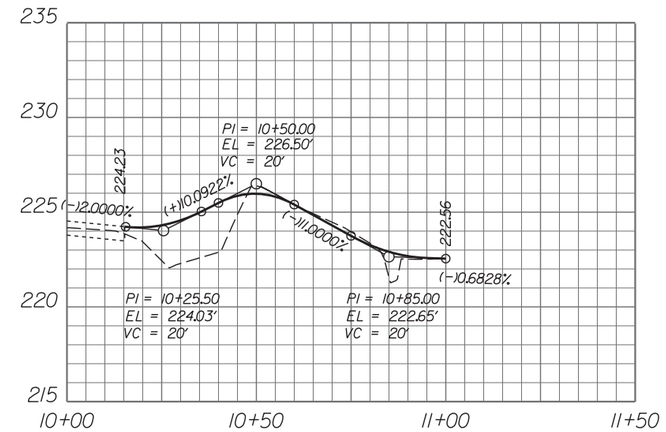

DRIVE 1 PROFILE

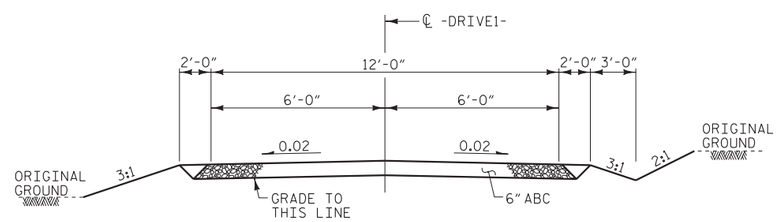

TYPICAL DRIVEWAY SECTION

PROJECT NO. 17BP.4.R.52

NASH COUNTY

STATION: 15+28.67 -L-

REPLACES BRIDGE NO. 32 SHEET 2 OF 2

STATE OF NORTH CAROLINA
DEPARTMENT OF TRANSPORTATION
RALEIGH

ROADWAY DETAILS

33′-10″ CLEAR ROADWAY - 60° SKEW

NORTH CAROLINA PROFESSIONAL SEAL 19661 ENGINEER L. KEVIN AUSTIN 8/29/14

PLANS PREPARED BY:

MULKEY ENGINEERS & CONSULTANTS
PO Box 33127
RALEIGH, N.C. 27636
(919) 851-1912
(919) 851-1918 (FAX)
WWW.MULKEYINC.COM
NC LICENSE NO. C-1081

REVISIONS						SHEET NO.
NO.	BY:	DATE:	NO.	BY:	DATE:	6
1			3			TOTAL SHEETS
2			4			36

DRAWN BY : W. B. ALLEN DATE : 7/13
CHECKED BY : L. K. AUSTIN DATE : 8/13

9/29/2014 2:09:53 PM R:\Structures\Nash 32_SD_DD_04.dgn

8/23/99

0 2.5 5	PROJ. REFERENCE NO.	SHEET NO.
	17BP.4.R.52	7

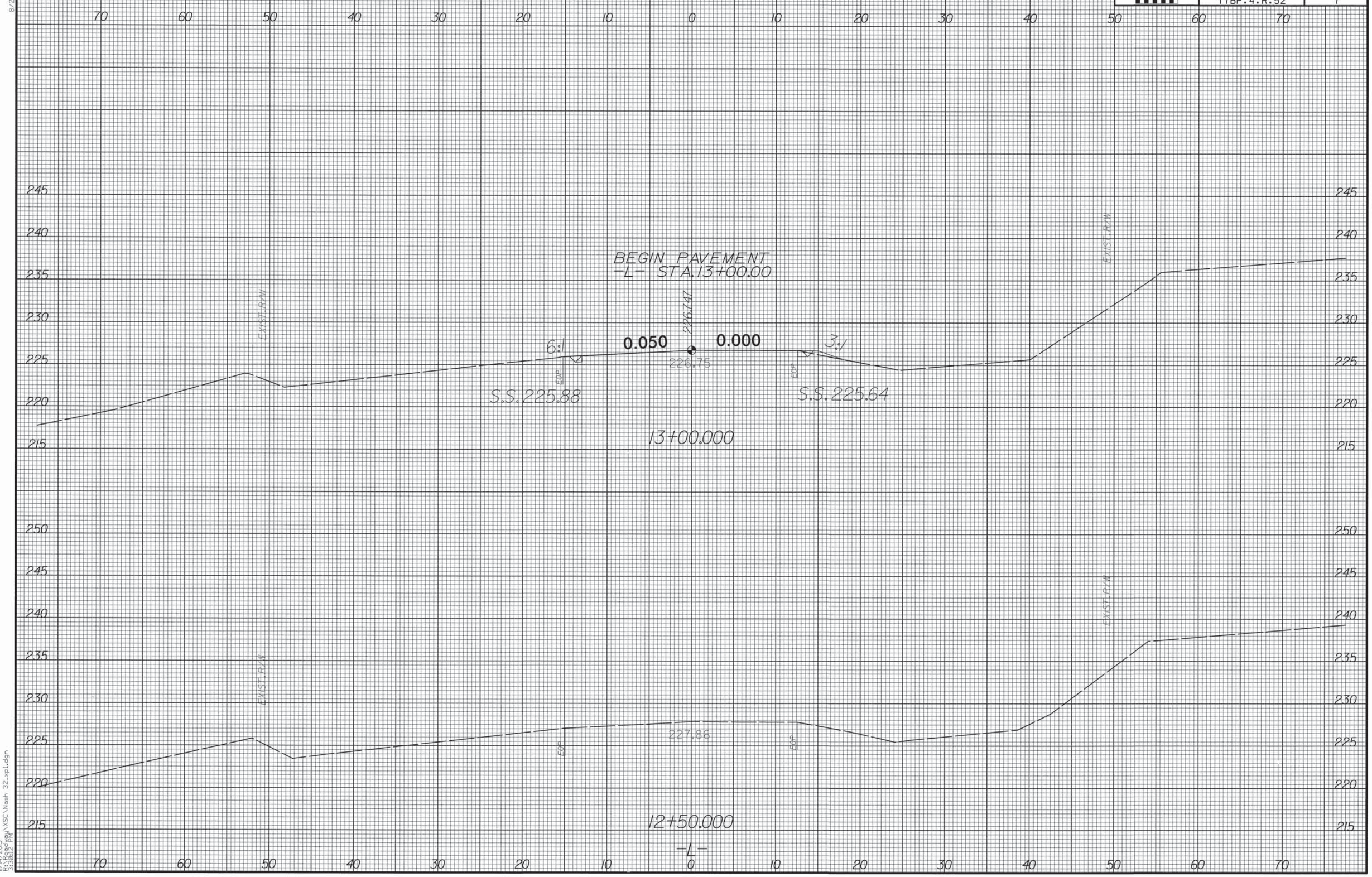

11/14/2013
3:10:08 pm
Bentley\XSC\Wash 32_xpl.dgn

0 2.5 5	PROJ. REFERENCE NO.	SHEET NO.
	17BP.4.R.52	8

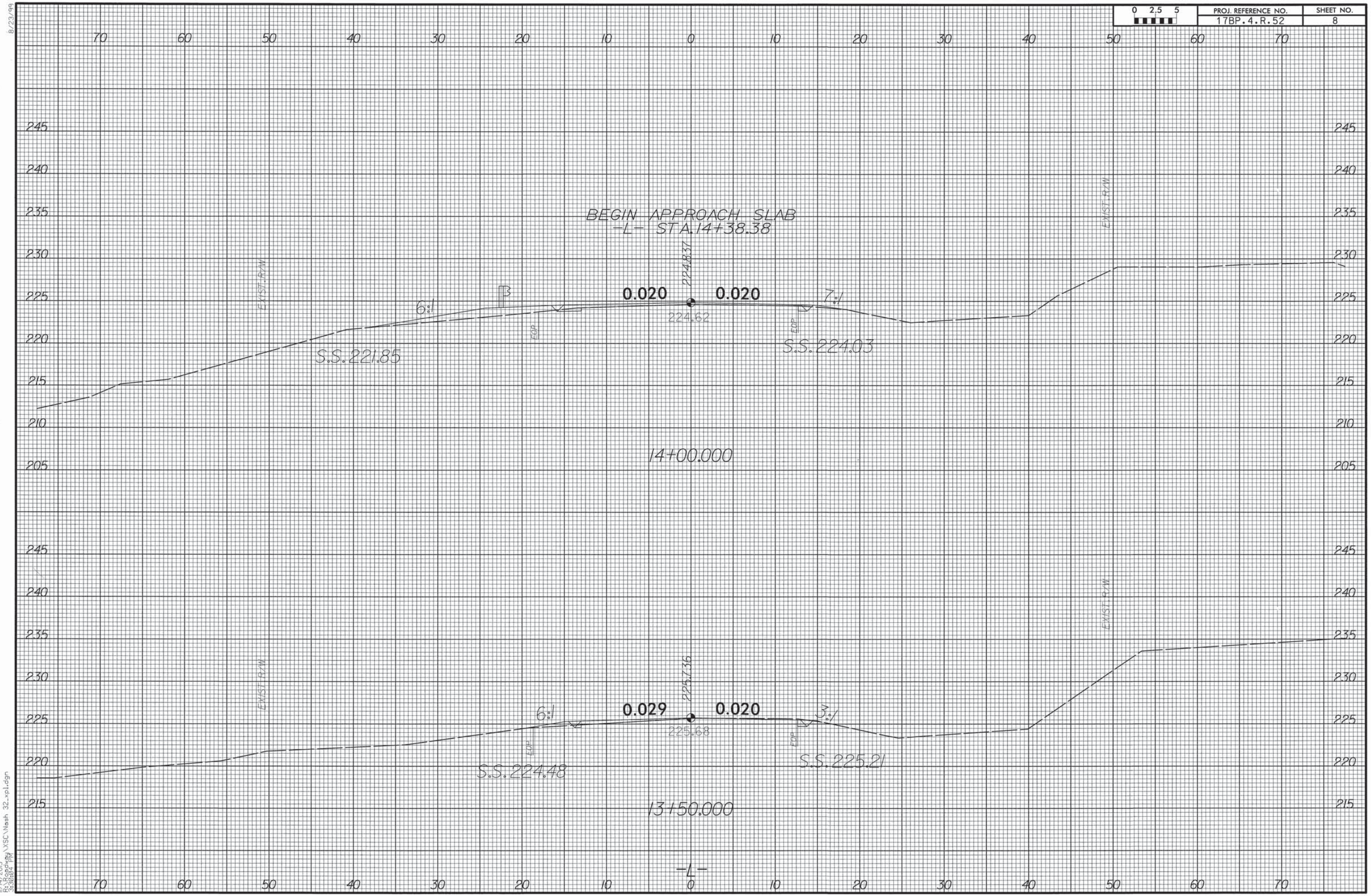

8/23/99

11/14/2013
R:\Bridge\Hay\XSC\Nash 32_xpl.dgn
33.0625 PM

8/23/99

0 2.5 5	PROJ. REFERENCE NO.	SHEET NO.
	17BP.4.R.52	9

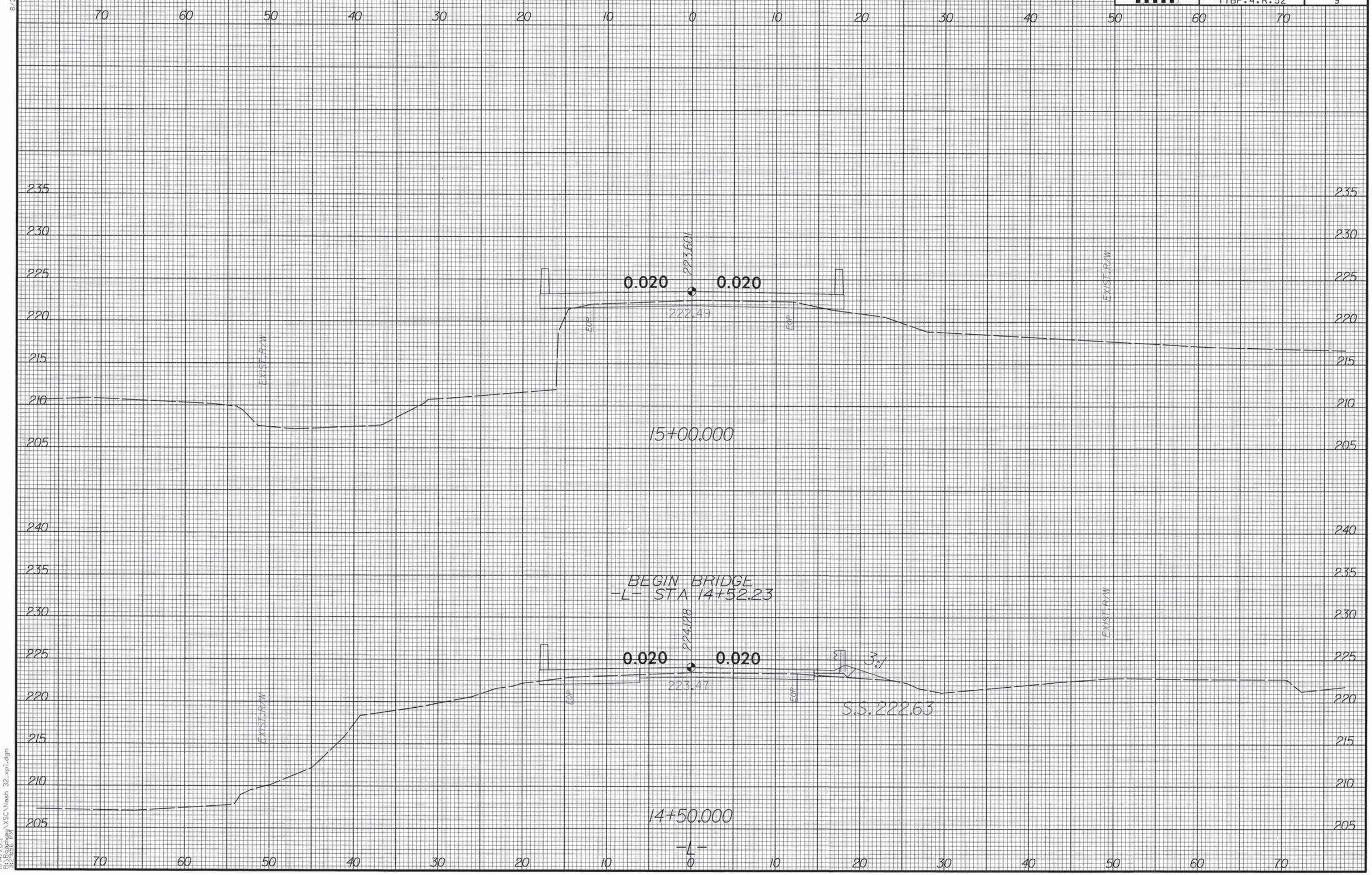

11/14/2013
12:28:58 PM
\\Sc\Nash 32_xpl.dgn

0 2.5 5	PROJ. REFERENCE NO.	SHEET NO.
	17BP.4.R.52	10

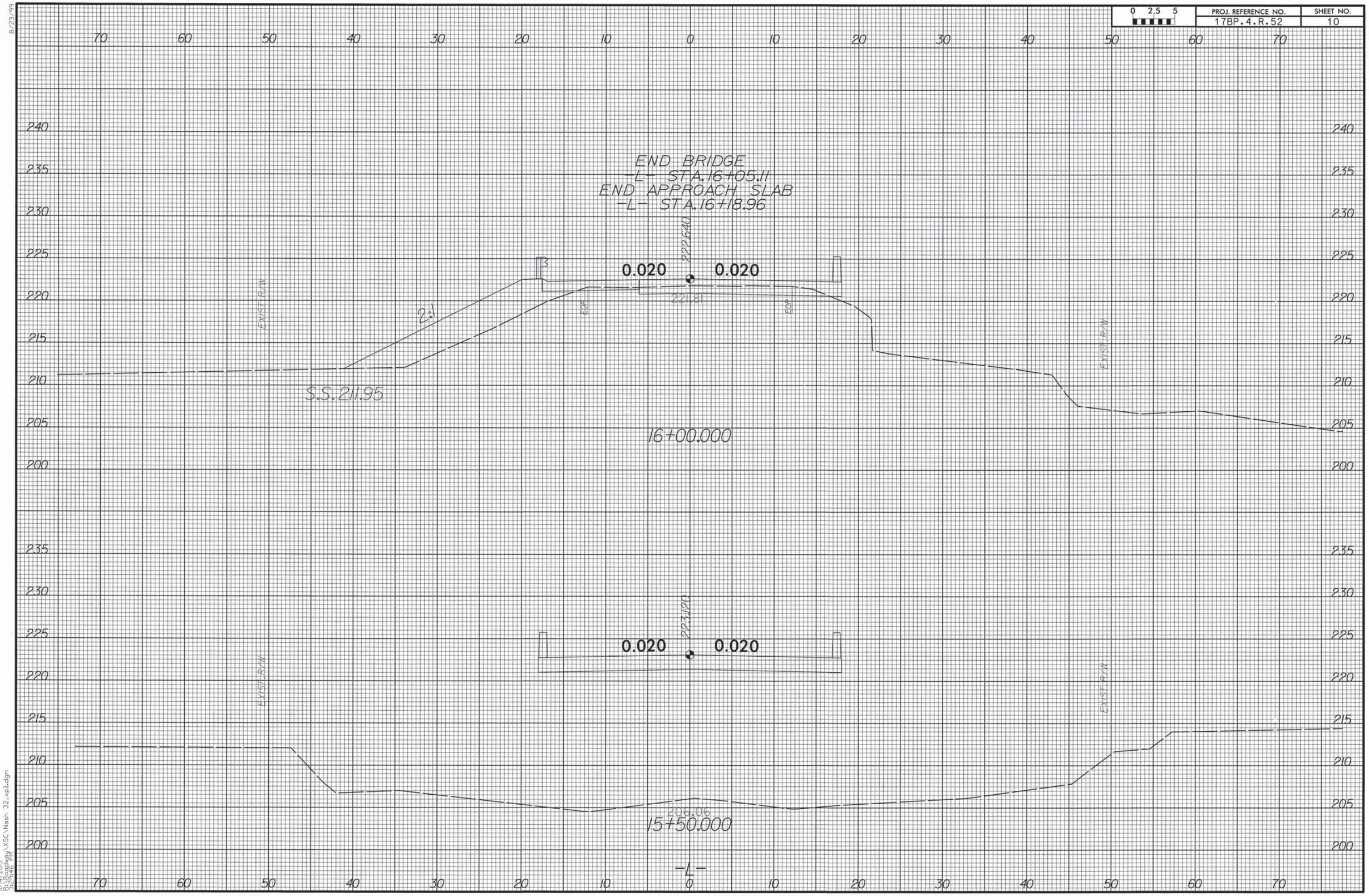

8/23/99

11/14/2013
R:\Roadway\XSC\Nash 32_xpl.dgn

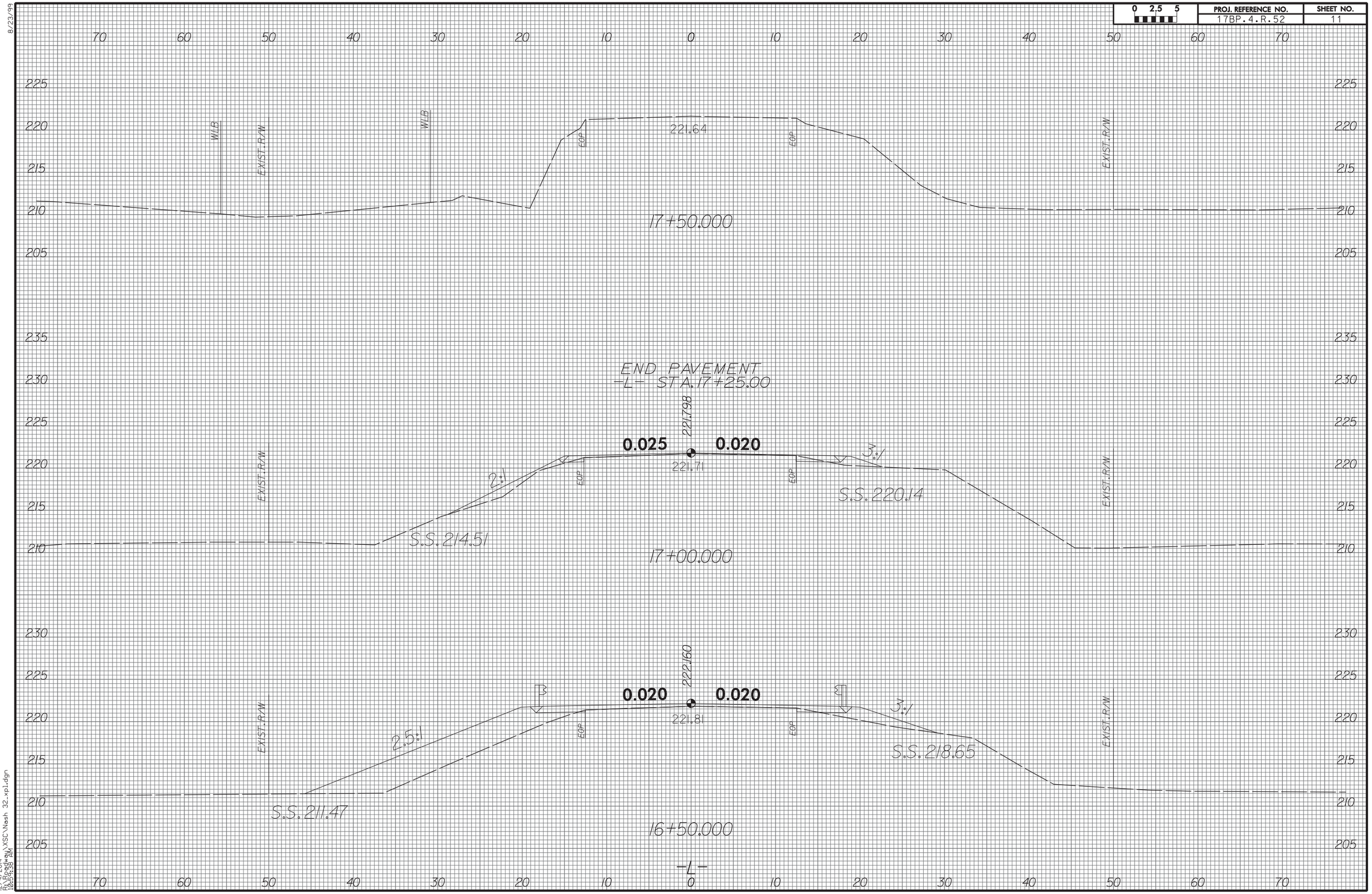

8/23/99
12/4/2014
R:\Active\Nash\XSC\Nash 32_xp1.dgn
10:59:38 AM

8/23/99

0 2.5 5	PROJ. REFERENCE NO.	SHEET NO.
	17BP.4.R.52	12

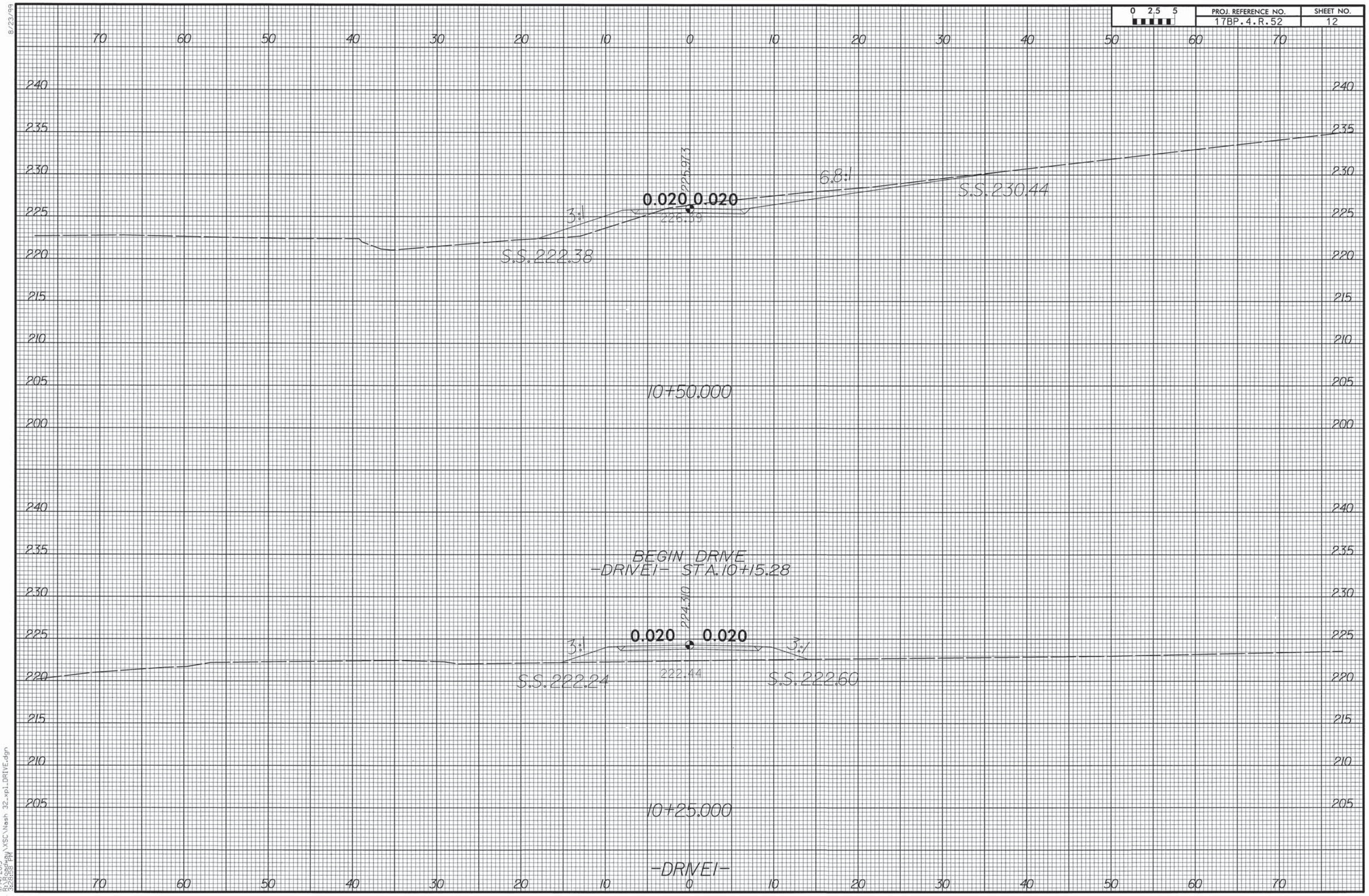

11/14/2013
13:38:38 PM
\\Nashdot\Hwy\XSC\Nash 32_xp1_DRIVE.dgn

0 2.5 5	PROJ. REFERENCE NO.	SHEET NO.
	17BP.4.R.52	13

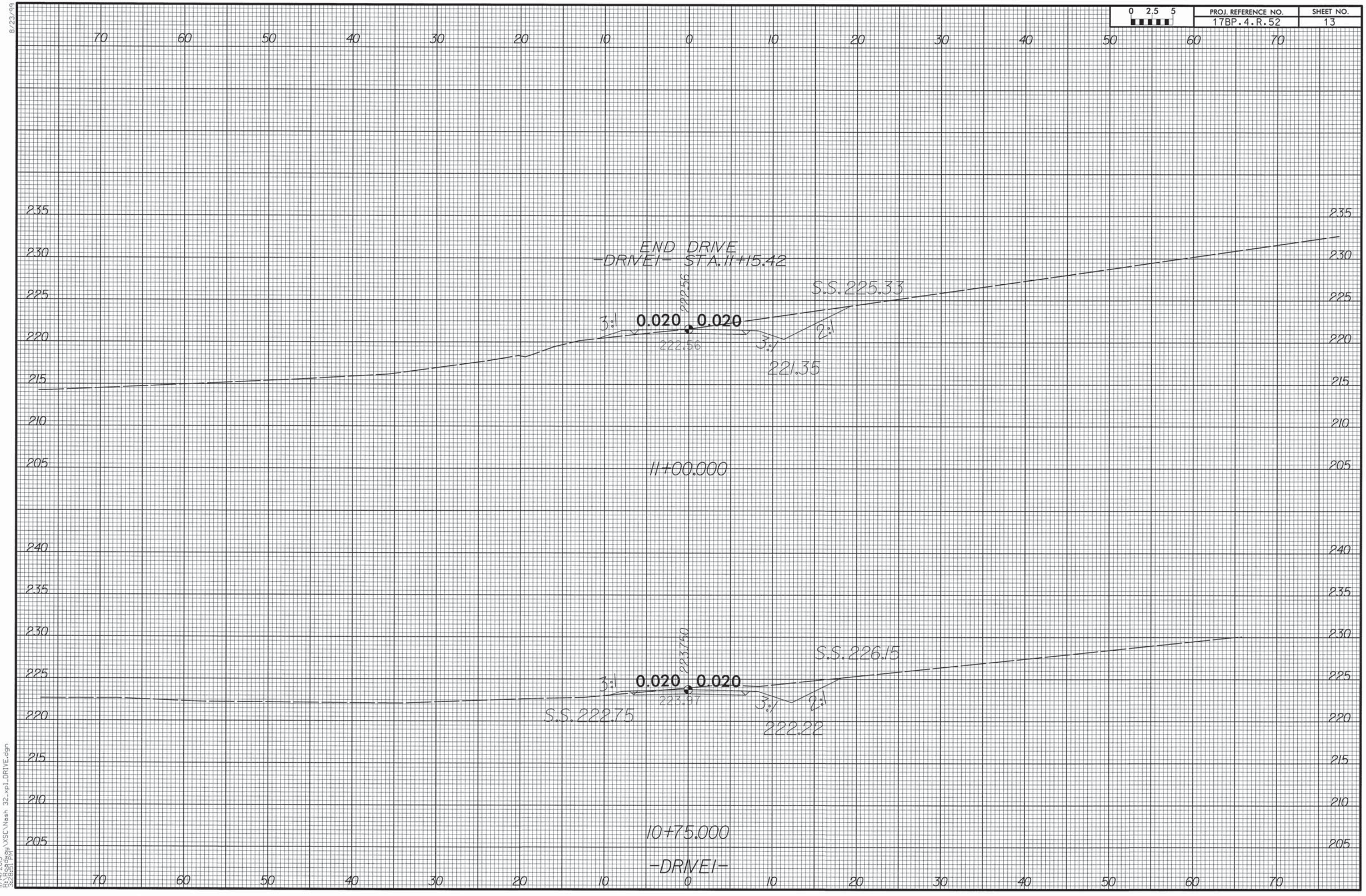

8/23/99

11/14/2013
9:28:29am
C:\Users\dgu\VSC\Wash 32_xp1_DRIVE.dgn

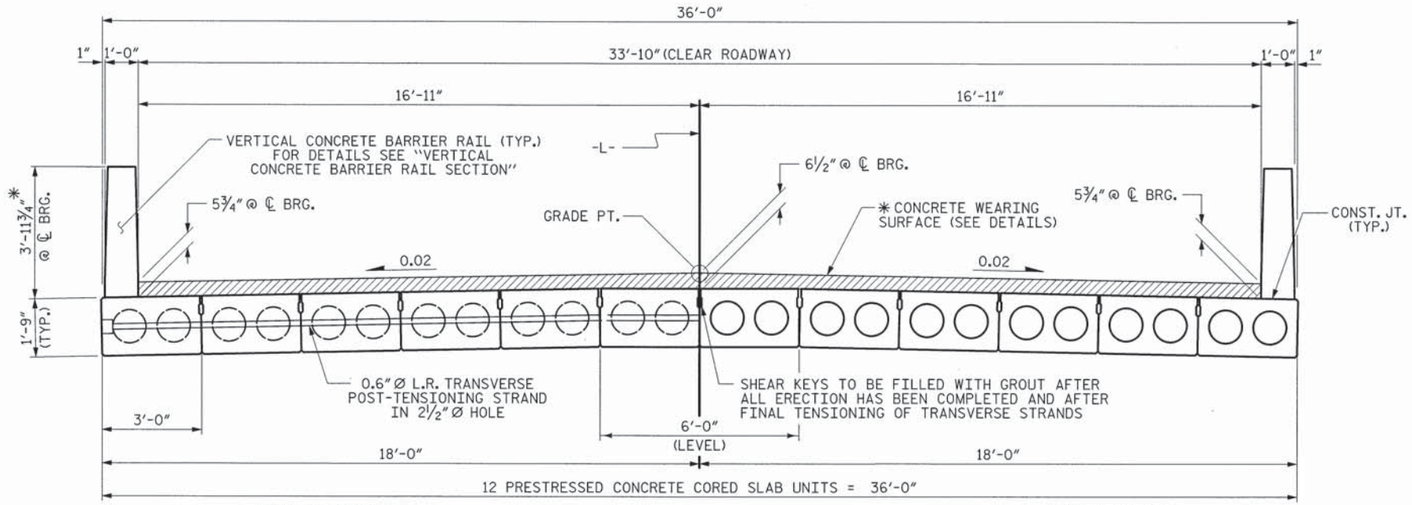

HALF SECTION
AT INTERMEDIATE DIAPHRAGMS

HALF SECTION
THROUGH VOIDS

TYPICAL SECTION

✳ - THE MAXIMUM BARRIER RAIL HEIGHT AND CONCRETE THICKNESS IS SHOWN. THE HEIGHT OF THE BARRIER RAIL AND CONCRETE THICKNESS VARIES WHILE THE TOP OF THE BARRIER RAIL FOLLOWS THE PROFILE OF THE GUTTERLINE. FOR RAIL HEIGHT DETAILS AND CONCRETE THICKNESS SEE THE "VERTICAL CONCRETE BARRIER RAIL SECTION" DETAIL.

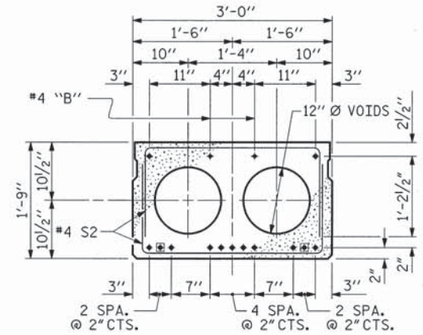

INTERIOR SLAB SECTION
(45' UNIT)
(13 STRANDS REQUIRED)

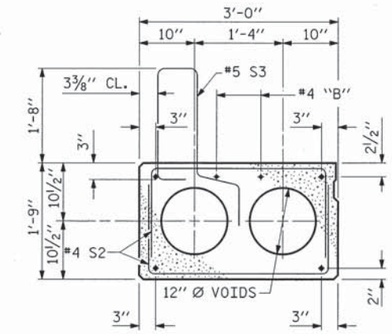

EXT. SLAB SECTION

(FOR PRESTRESSED STRAND LAYOUT, SEE INTERIOR SLAB SECTION.)

0.6" Ø LOW RELAXATION STRAND LAYOUT

◉ BOND SHALL BE BROKEN ON THESE STRANDS FOR A DISTANCE OF 2'-0" FROM END OF CORED SLAB UNIT. SEE STANDARD SPECIFICATIONS, ARTICLE 1078-7.

DEBONDING LEGEND

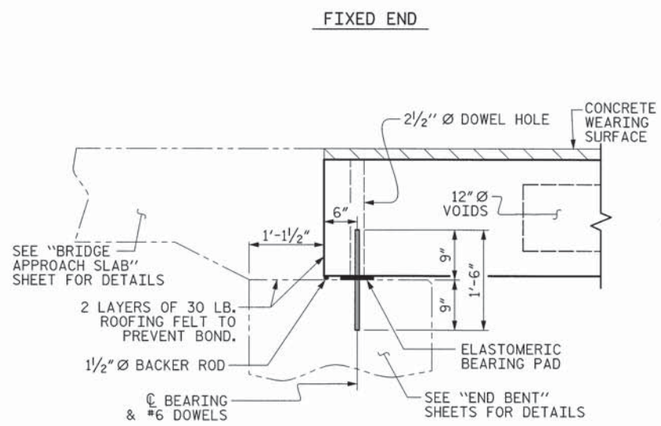

SECTION AT END BENT

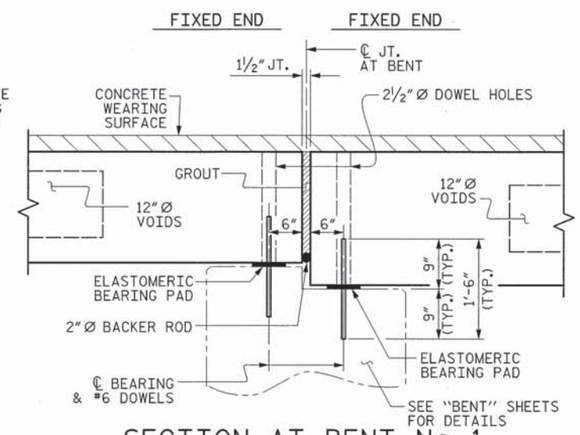

SECTION AT BENT No. 1

(BENT No. 2 SIM. BY ROTATION)

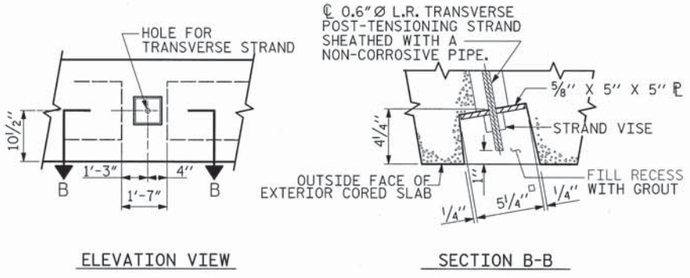

ELEVATION VIEW

SECTION B-B

GROUTED RECESS AT END OF POST-TENSIONED STRAND OF CORED SLABS

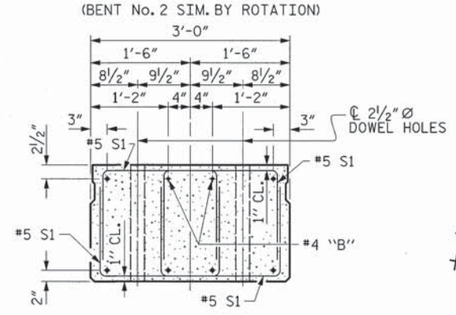

END ELEVATION

SHOWING PLACEMENT OF DOUBLE STIRRUPS AND LOCATION OF DOWEL HOLES. (STRAND LAYOUT NOT SHOWN.) INTERIOR SLAB UNIT SHOWN-EXTERIOR SLAB UNIT SIMILAR EXCEPT SHEAR KEY LOCATION.

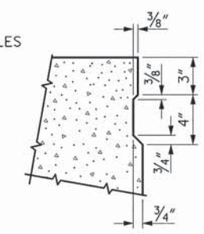

SHEAR KEY DETAIL

NOTE: OMIT SHEAR KEY ON OUTSIDE FACE OF EXTERIOR CORED SLABS.

PROJECT NO. 17BP.4.R.52
NASH COUNTY
STATION: 15+28.67 -L-

STATE OF NORTH CAROLINA
DEPARTMENT OF TRANSPORTATION
RALEIGH

STANDARD
3'-0" X 1'-9"
PRESTRESSED CONCRETE CORED SLAB UNIT
60° SKEW
SPANS A & C

THIS STANDARD DRAWING REVIEWED & ADOPTED FOR USE AT THE REFERENCED LOCATION BY THE UNDERSIGNED:

NORTH CAROLINA PROFESSIONAL ENGINEER SEAL 19661 KEVIN AUSTIN 11/15/13

PLANS PREPARED BY:
MULKEY ENGINEERS & CONSULTANTS
PO Box 33127 Raleigh, N.C. 27636
(919) 851-1912
(919) 851-1918 (FAX)
WWW.MULKEYINC.COM
NC LICENSE NO. C-1021

REVISIONS									
NO.	BY:	DATE:	NO.	BY:	DATE:	NO.	BY:	DATE:	
1			3						
2			4						

SHEET NO. 14
TOTAL SHEETS 36

ASSEMBLED BY : Z. H. BROWN DATE : 7/30/13
CHECKED BY : W. A. DAVIS DATE : 8/14/13
DRAWN BY : DGE 5/09
CHECKED BY : BCH 6/09
REV. 12/11 MAA/AAC

11/14/2013 3:26:40 PM R:\Structures\Nash 32_50_CS_0i.dgn

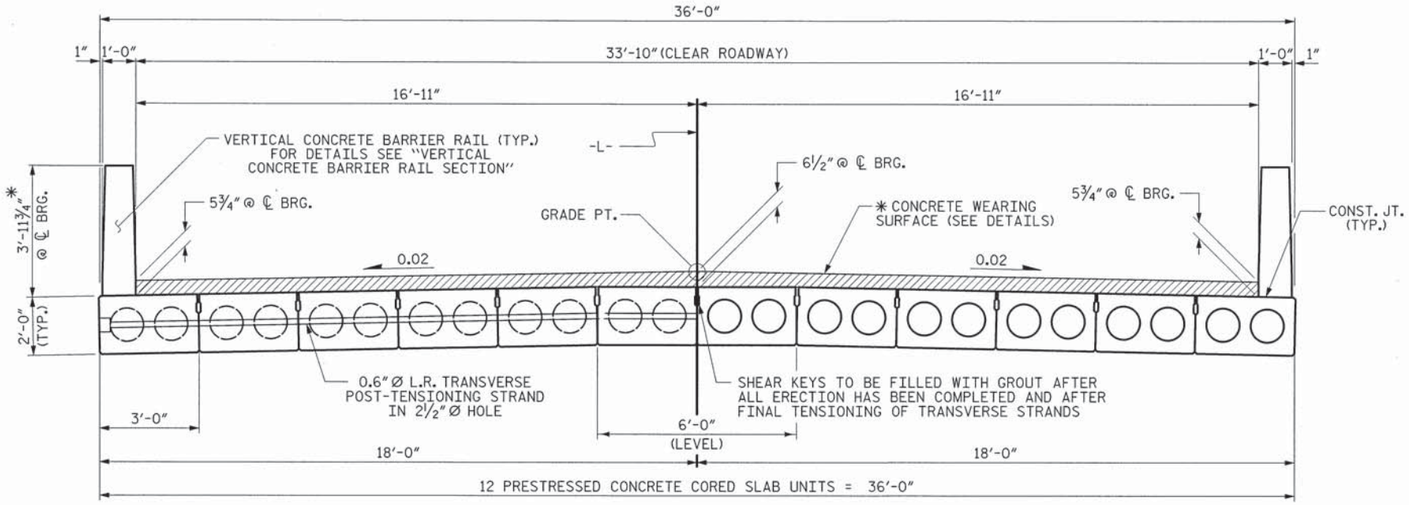

HALF SECTION
AT INTERMEDIATE DIAPHRAGMS

TYPICAL SECTION

HALF SECTION
THROUGH VOIDS

* - THE MAXIMUM BARRIER RAIL HEIGHT AND CONCRETE THICKNESS IS SHOWN. THE HEIGHT OF THE BARRIER RAIL AND CONCRETE THICKNESS VARIES WHILE THE TOP OF THE BARRIER RAIL FOLLOWS THE PROFILE OF THE GUTTERLINE. FOR RAIL HEIGHT DETAILS AND CONCRETE THICKNESS, SEE THE "VERTICAL CONCRETE BARRIER RAIL SECTION" DETAIL.

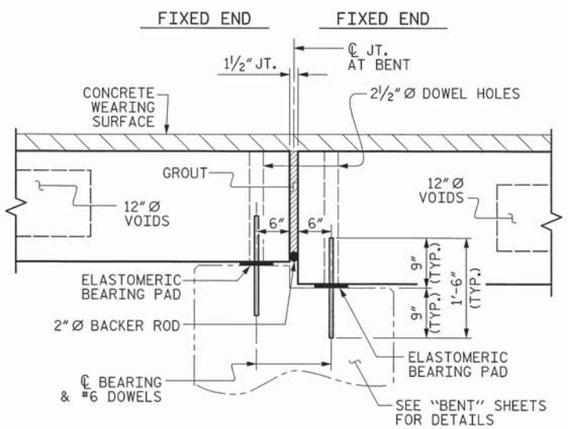

SECTION AT BENT No. 1

(BENT 2 SIMILAR BY ROTAION)

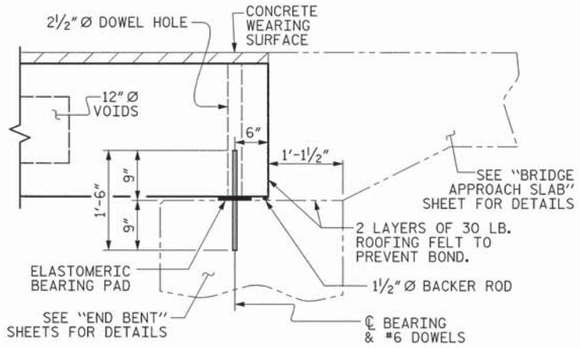

SECTION AT END BENT

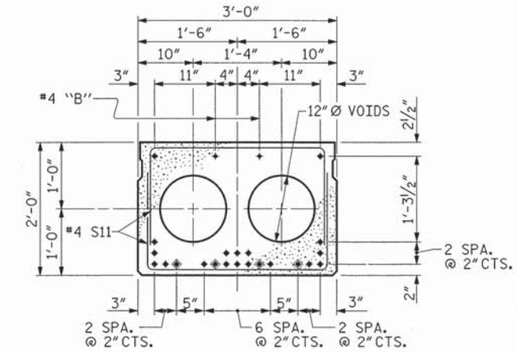

INTERIOR SLAB SECTION (60' UNIT)
(22 STRANDS REQUIRED)

0.6'' Ø LOW RELAXATION STRAND LAYOUT

◈ BOND SHALL BE BROKEN ON THESE STRANDS FOR A DISTANCE OF 12'-0" FROM END OF CORED SLAB UNIT. SEE STANDARD SPECIFICATIONS, ARTICLE 1078-7.

DEBONDING LEGEND

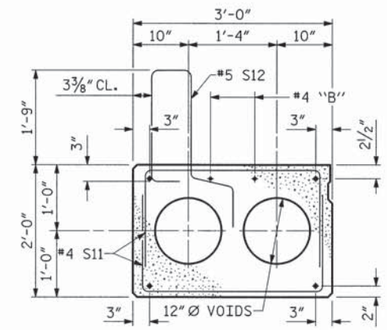

EXTERIOR SLAB SECTION

(FOR PRESTRESSED STRAND LAYOUT, SEE INTERIOR SLAB SECTION.)

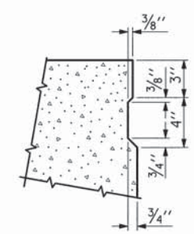

SHEAR KEY DETAIL

NOTE: OMIT SHEAR KEY ON OUTSIDE FACE OF EXTERIOR CORED SLABS.

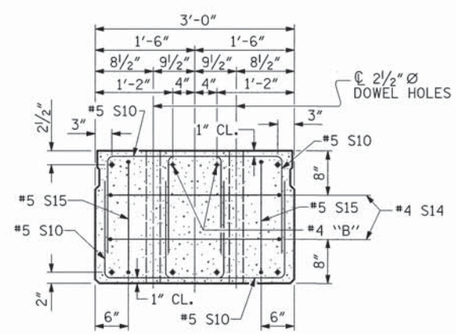

END ELEVATION

SHOWING PLACEMENT OF DOUBLE STIRRUPS AND LOCATION OF DOWEL HOLES. (STRAND LAYOUT NOT SHOWN.) INTERIOR SLAB UNIT SHOWN-EXTERIOR SLAB UNIT SIMILAR EXCEPT SHEAR KEY LOCATION.

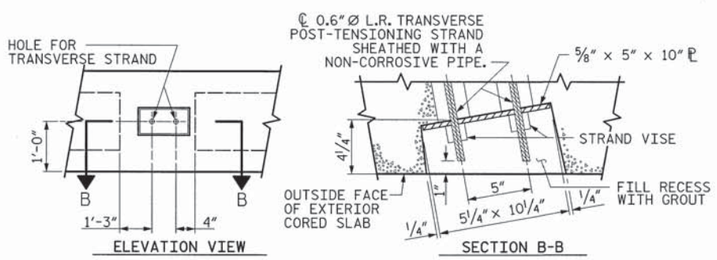

GROUTED RECESS AT END OF POST-TENSIONED STRAND CORED SLABS

PROJECT NO. 17BP.4.R.52
NASH COUNTY
STATION: 15+28.67 -L-

THIS STANDARD DRAWING REVIEWED & ADOPTED FOR USE AT THE REFERENCED LOCATION BY THE UNDERSIGNED:

NORTH CAROLINA PROFESSIONAL SEAL ENGINEER 19661 K. AUSTIN
11/15/13

PLANS PREPARED BY:
MULKEY ENGINEERS & CONSULTANTS
PO Box 33127 Raleigh, N.C. 27636
(919) 851-1912
(919) 851-1918 (FAX)
WWW.MULKEYINC.COM
NC LICENSE NO. C-1031

STATE OF NORTH CAROLINA
DEPARTMENT OF TRANSPORTATION
RALEIGH

STANDARD
3'-0'' X 2'-0''
PRESTRESSED CONCRETE
CORED SLAB UNIT
60° SKEW
SPAN B

REVISIONS								SHEET NO.
NO.	BY:	DATE:	NO.	BY:	DATE:			15
1			3					TOTAL SHEETS
2			4					36

ASSEMBLED BY : Z. H. BROWN		DATE : 7/31/13	
CHECKED BY : W. A. DAVIS		DATE : 8/14/13	
DRAWN BY : MAA	6/10	REV. 12/11	MAA/AAC
CHECKED BY : MKT	7/10		

8/14/2013 3:25:54 PM R:\Structures\Nash 32_SD_C5_02.dgn

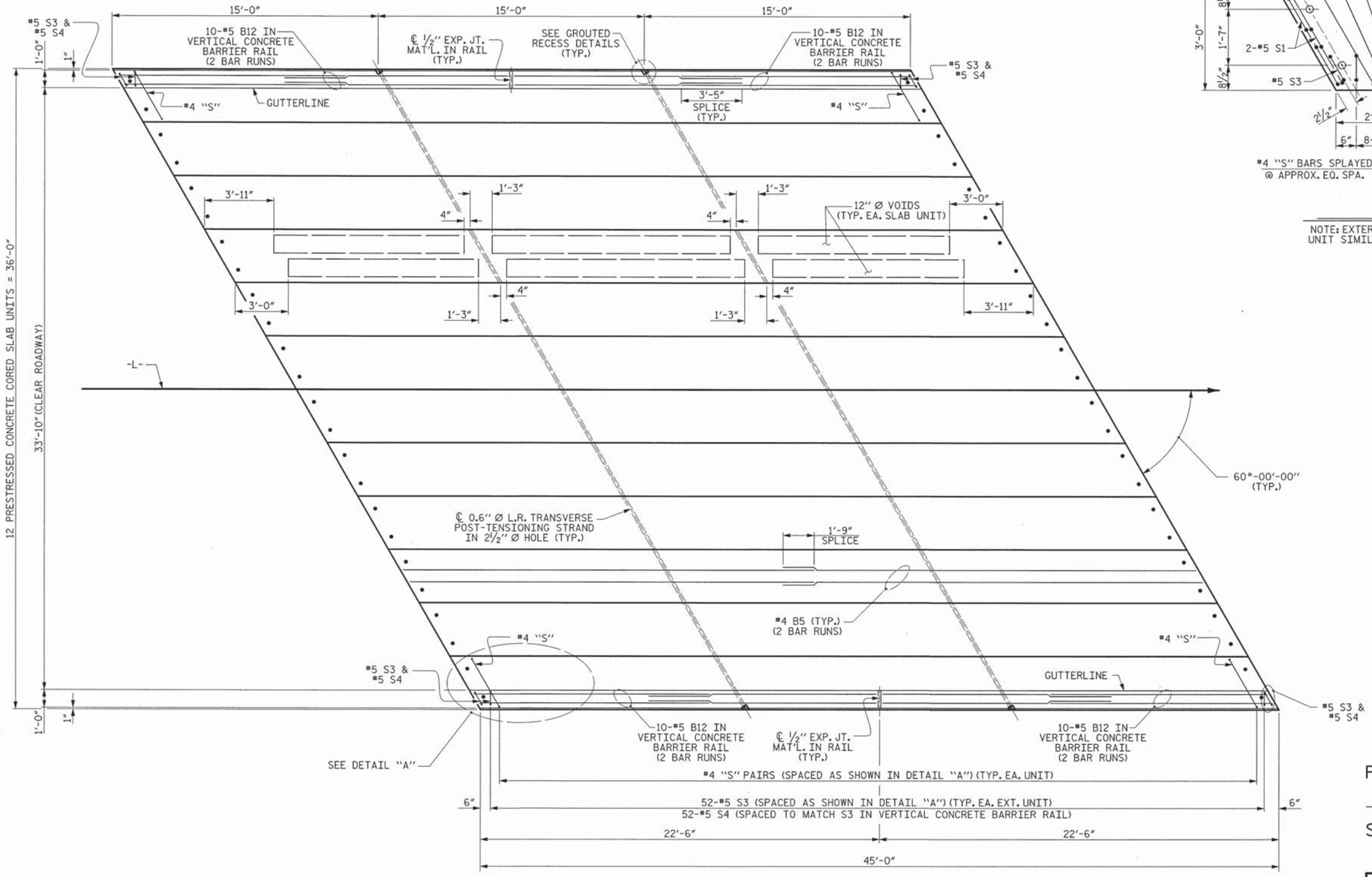

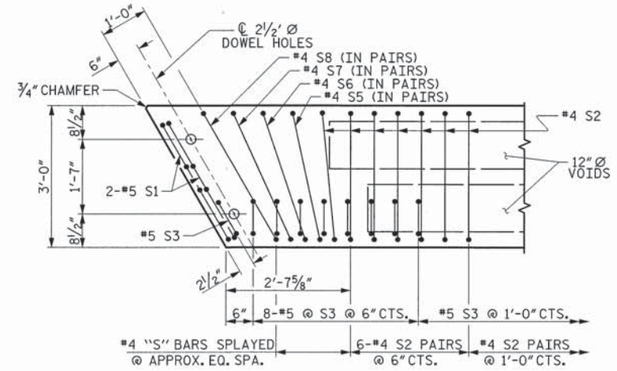

DETAIL "A"

NOTE: EXTERIOR UNIT SHOWN - INTERIOR UNIT SIMILAR EXCEPT OMIT #5 S3 BARS.

PROJECT NO. 17BP.4.R.52

NASH COUNTY

STATION: 15+28.67 -L-

PLAN OF UNIT

PLANS PREPARED BY:

MULKEY ENGINEERS & CONSULTANTS
PO Box 33127
Raleigh, N.C. 27636
(919) 851-1912
(919) 851-1918 (FAX)
WWW.MULKEYINC.COM
NC LICENSE NO. C-1021

THIS STANDARD DRAWING REVIEWED & ADOPTED FOR USE AT THE REFERENCED LOCATION BY THE UNDERSIGNED:

NORTH CAROLINA PROFESSIONAL SEAL 19661 ENGINEER KEVIN AUSTIN 11/15/13

STATE OF NORTH CAROLINA
DEPARTMENT OF TRANSPORTATION
RALEIGH

PLAN OF 45' UNIT 33'-10" CLEAR ROADWAY 60° SKEW

SPANS A & C

REVISIONS						SHEET NO.
NO.	BY:	DATE:	NO.	BY:	DATE:	16
1			3			TOTAL SHEETS
2			4			36

ASSEMBLED BY :	Z. H. BROWN	DATE :	7/30/13
CHECKED BY :	W. A. DAVIS	DATE :	8/14/13
DRAWN BY : DGE 5/09	REV. 12/5/11	MAA/AAC	
CHECKED BY: BCH 6/09			

11/4/2013 3:25:39 PM R:\Structures\Nash 32_50_CS_03.dgn

STD. NO. 21" PCS_36_60S_45L

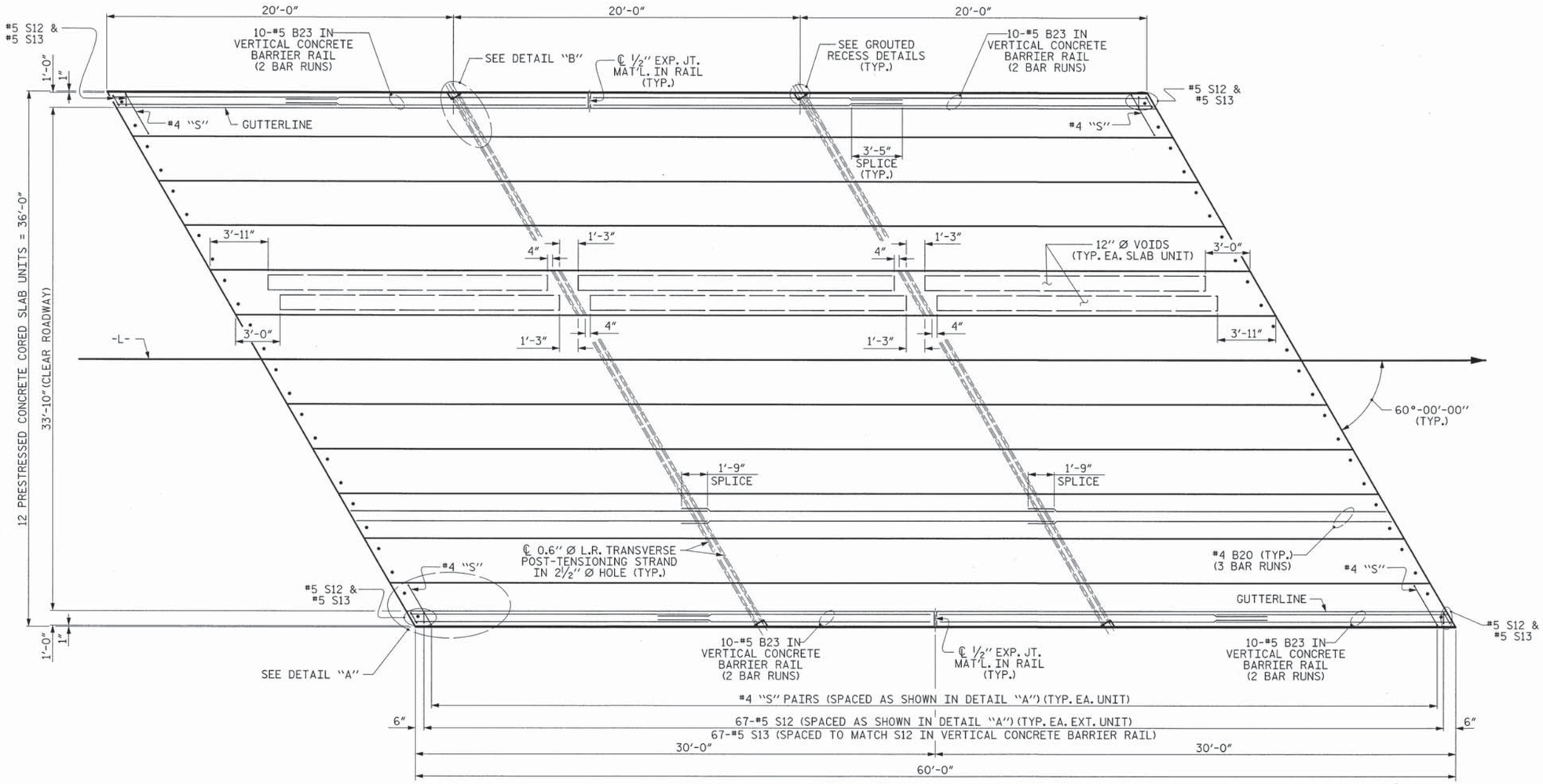

PLAN OF UNIT

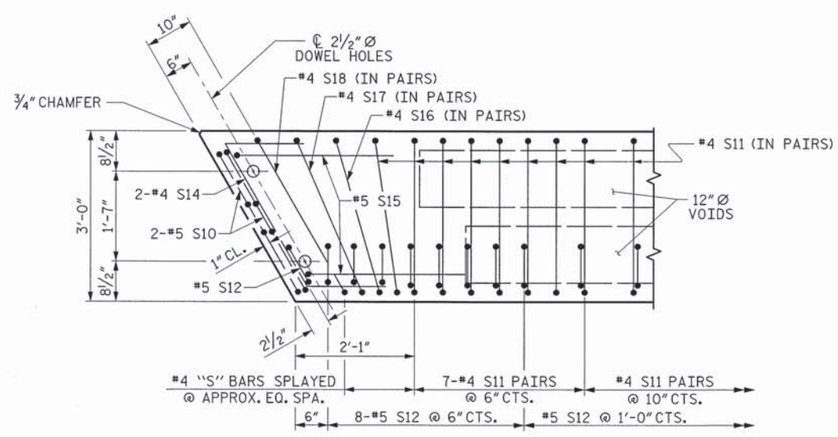

DETAIL "A"

NOTE: EXTERIOR UNIT SHOWN - INTERIOR UNIT SIMILAR EXCEPT OMIT #5 S12 BARS.

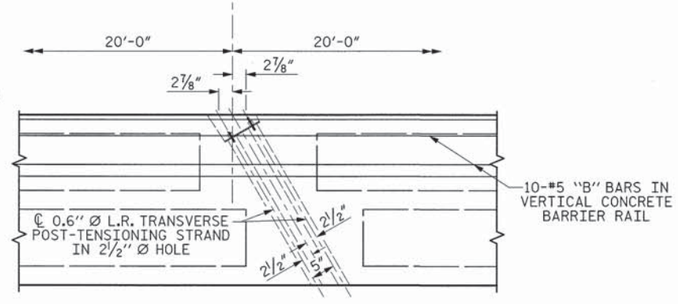

DETAIL "B"

#4 S11 BARS MAY BE SHIFTED AS NECESSARY TO MAINTAIN 1" CLEAR TO GROUTED RECESS AND 2 1/2" Ø TRANSVERSE POST-TENSIONING STRAND HOLES

PROJECT NO. 17BP.4.R.52

NASH COUNTY

STATION: 15+28.67 -L-

STATE OF NORTH CAROLINA
DEPARTMENT OF TRANSPORTATION
RALEIGH

PLAN OF 60' UNIT 33'-10" CLEAR ROADWAY 60° SKEW

SPAN B

PLANS PREPARED BY:

MULKEY ENGINEERS & CONSULTANTS
PO Box 33127
Raleigh, N.C. 27636
(919) 851-1912
(919) 851-1918 (FAX)
WWW.MULKEYINC.COM
NC LICENSE NO. C-1021

THIS STANDARD DRAWING REVIEWED & ADOPTED FOR USE AT THE REFERENCED LOCATION BY THE UNDERSIGNED:

NORTH CAROLINA PROFESSIONAL SEAL 19661 ENGINEER KEVIN AUSTIN
11/15/13

REVISIONS						SHEET NO.
NO.	BY:	DATE:	NO.	BY:	DATE:	17
1			3			TOTAL SHEETS
2			4			36

ASSEMBLED BY :	Z. H. BROWN	DATE :	7/31/13
CHECKED BY :	W. A. DAVIS	DATE :	8/14/13
DRAWN BY :	MAA 6/10	REV. 12/5/11	MAA/AAC
CHECKED BY :	MKT 7/10		

11/14/2013 3:22:45 PM R:\Structures\Nash 32_50_CS_04.dgn

STD. NO. 24PCS_36_60S_60L

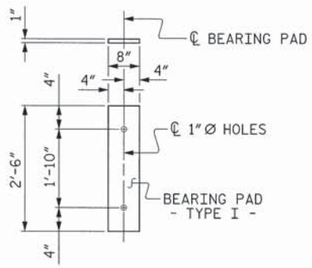

FIXED END
(TYPE I - 48 REQ'D)

ELASTOMERIC BEARING DETAILS

ELASTOMER IN ALL BEARINGS SHALL BE 60 DUROMETER HARDNESS.

GUTTERLINE CONCRETE WEARING SURFACE THICKNESS & RAIL HEIGHT		
33'-10" CLEAR ROADWAY	CONCRETE WEARING SURFACE THICKNESS	RAIL HEIGHT
	@ MID-SPAN	@ MID-SPAN
	NORMAL CROWN SECTION	
45' UNITS	4⅞"	3'-10⅞"

DEAD LOAD DEFLECTION AND CAMBER	
	3'-0" x 1'-9"
45' CORED SLAB UNIT	0.6" Ø L.R. STRAND
CAMBER (SLAB ALONE IN PLACE)	1⅛" ↑
DEFLECTION DUE TO SUPERIMPOSED DEAD LOAD**	¼" ↓
FINAL CAMBER	⅞" ↑

** INCLUDES FUTURE WEARING SURFACE

BAR TYPES

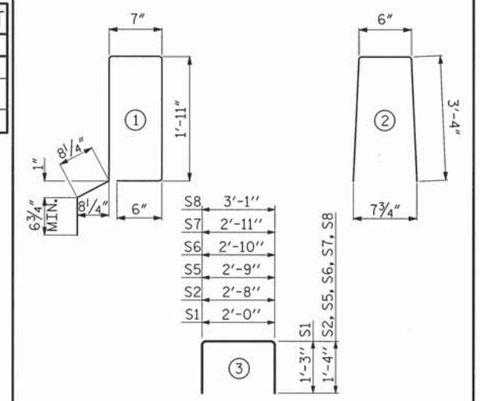

ALL BAR DIMENSIONS ARE OUT TO OUT

NOTES

ALL PRESTRESSING STRANDS SHALL BE 7-WIRE LOW RELAXATION GRADE 270 STRANDS AND SHALL CONFORM TO AASHTO M203 EXCEPT FOR SAMPLING REQUIREMENTS WHICH SHALL BE IN ACCORDANCE WITH THE STANDARD SPECIFICATIONS.

ALL REINFORCING STEEL CAST WITH THE CORED SLAB SECTIONS SHALL BE GRADE 60 AND SHALL BE INCLUDED IN THE UNIT PRICE BID FOR PRESTRESSED CONCRETE CORED SLABS.

RECESSES FOR TRANSVERSE STRANDS SHALL BE GROUTED AFTER THE TENSIONING OF THE STRANDS.

THE 2½" Ø DOWEL HOLES AT FIXED ENDS OF SLAB SECTIONS SHALL BE FILLED WITH NON-SHRINK GROUT.

THE BACKER RODS SHALL CONFORM TO THE REQUIREMENTS OF TYPE M BOND BREAKER. SEE SECTION 1028 OF THE STANDARD SPECIFICATIONS.

WHEN CORED SLABS ARE CAST, AN INTERNAL HOLD-DOWN SYSTEM SHALL BE EMPLOYED TO PREVENT VOIDS FROM RISING OR MOVING SIDEWAYS. AT LEAST SIX WEEKS PRIOR TO CASTING CORED SLABS, THE CONTRACTOR SHALL SUBMIT TO THE ENGINEER FOR REVIEW AND COMMENT, DETAILED DRAWINGS OF THE PROPOSED HOLD-DOWN SYSTEM. IN ADDITION TO STRUCTURAL DETAILS, LOCATION AND SPACING OF THE HOLD-DOWNS SHALL BE INDICATED.

ALL REINFORCING STEEL IN THE VERTICAL CONCRETE BARRIER RAIL SHALL BE EPOXY COATED.

PRESTRESSING STRANDS SHALL BE CUT FLUSH WITH THE CORED SLAB UNIT ENDS.

APPLY EPOXY PROTECTIVE COATING TO CORED SLAB UNIT ENDS.

GROOVED CONTRACTION JOINTS, ½" IN DEPTH, SHALL BE TOOLED IN ALL EXPOSED FACES OF THE BARRIER RAIL AND IN ACCORDANCE WITH ARTICLE 825-10(B) OF THE STANDARD SPECIFICATIONS. A CONTRACTION JOINT SHALL BE LOCATED AT EACH THIRD POINT BETWEEN BARRIER RAIL EXPANSION JOINTS. ONLY ONE CONTRACTION JOINT IS REQUIRED AT MIDPOINT OF BARRIER RAIL SEGMENTS LESS THAN 20 FEET IN LENGTH AND NO CONTRACTION JOINTS ARE REQUIRED FOR THOSE SEGMENTS LESS THAN 10 FEET IN LENGTH.

TRANSVERSE POST TENSIONING OF THE CORED SLAB UNITS SHALL BE DONE IN ACCORDANCE WITH THE STANDARD SPECIFICATIONS.

THE TRANSFER OF LOAD FROM THE ANCHORAGES TO THE CORED SLAB UNIT SHALL BE DONE WHEN THE CONCRETE HAS REACHED A COMPRESSIVE STRENGTH OF NOT LESS THAN THE REQUIRED STRENGTH SHOWN IN THE "CONCRETE RELEASE STRENGTH" TABLE.

FOR GROUT FOR STRUCTURES, SEE SPECIAL PROVISIONS.

CORED SLABS REQUIRED			
	NUMBER	LENGTH	TOTAL LENGTH
45' UNIT			
EXTERIOR C.S.	4	45'-0"	180'-0"
INTERIOR C.S.	20	45'-0"	900'-0"
TOTAL	24	45'-0"	1080'-0"

BILL OF MATERIAL FOR VERTICAL CONCRETE BARRIER RAIL						
BAR	BARS PER PAIR OF EXTERIOR UNITS	TOTAL NO.	SIZE	TYPE	LENGTH	WEIGHT
	45' UNIT					
*B12	80	160	#5	STR	13'-0"	2170
* S4	108	216	#5	2	7'-2"	1614
* EPOXY COATED REINFORCING STEEL				LBS.		3784
CLASS AA CONCRETE				CU.YDS.		23.6
TOTAL VERTICAL CONCRETE BARRIER RAIL				LN. FT.		180.58

BILL OF MATERIAL FOR ONE 45' CORED SLAB UNIT							
				EXTERIOR UNIT		INTERIOR UNIT	
BAR	NUMBER	SIZE	TYPE	LENGTH	WEIGHT	LENGTH	WEIGHT
B5	4	#4	STR	23'-3"	62	23'-3"	62
S1	8	#5	3	4'-6"	38	4'-6"	38
S2	92	#4	3	5'-4"	328	5'-4"	328
* S3	54	#5	1	6'-2"	347		
S5	4	#4	3	5'-5"	14	5'-5"	14
S6	4	#4	3	5'-6"	15	5'-6"	15
S7	4	#4	3	5'-7"	15	5'-7"	15
S8	4	#4	3	5'-9"	15	5'-9"	15
REINFORCING STEEL			LBS.		487		487
* EPOXY COATED REINFORCING STEEL			LBS.		347		
5000 P.S.I. CONCRETE			CU. YDS.		6.6		6.6
0.6" Ø L.R. STRANDS			No.		13		13

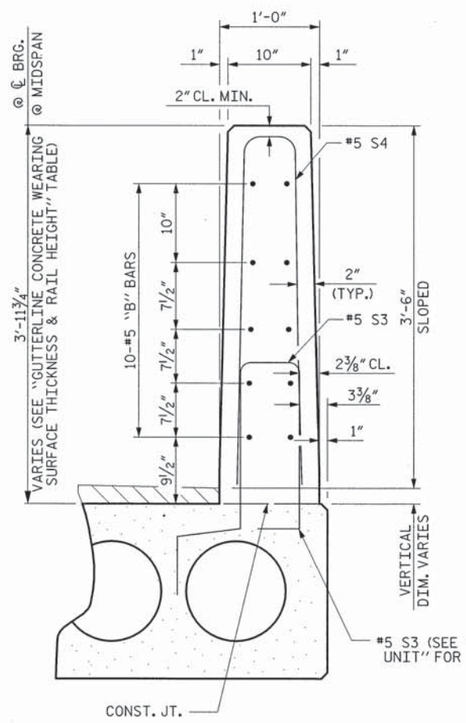

VERTICAL CONCRETE BARRIER RAIL SECTION

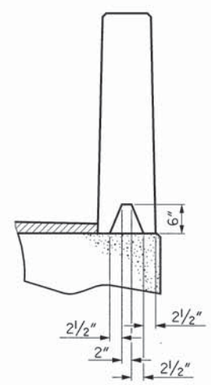

SECTION S-S
AT DAM IN OPEN JOINT
(THIS IS TO BE USED ONLY WHEN SLIP FORM IS USED)

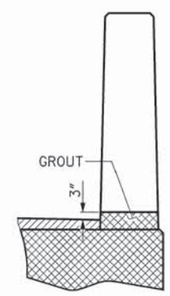

SECTION T-T
AT OPEN JOINT AT BENT
(THIS IS TO BE USED WHERE FOAM JOINT IS NOT USED)

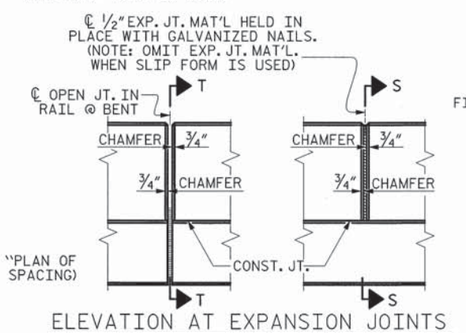

ELEVATION AT EXPANSION JOINTS

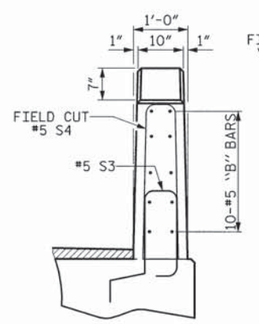

END VIEW

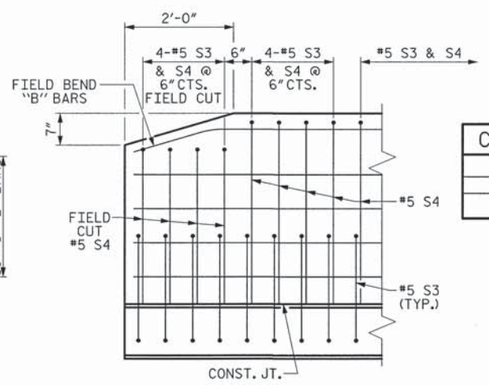

SIDE VIEW

END OF RAIL DETAILS

GRADE 270 STRANDS	
	0.6" Ø L.R.
AREA (SQUARE INCHES)	0.217
ULTIMATE STRENGTH (LBS. PER STRAND)	58,600
APPLIED PRESTRESS (LBS. PER STRAND)	43,950

CONCRETE RELEASE STRENGTH	
UNIT	PSI
45' UNITS	4000

PLANS PREPARED BY:
MULKEY ENGINEERS & CONSULTANTS
PO Box 33127
RALEIGH, N.C. 27636
(919) 851-1912
(919) 851-1918 (FAX)
WWW.MULKEYINC.COM
NC LICENSE NO. C-1321

PROJECT NO. 17BP.4.R.52
NASH COUNTY
STATION: 15+28.67 -L-

THIS STANDARD DRAWING REVIEWED & ADOPTED FOR USE AT THE REFERENCED LOCATION BY THE UNDERSIGNED:

NORTH CAROLINA PROFESSIONAL ENGINEER SEAL 19661 L. KEVIN AUSTIN 11/15/13

STATE OF NORTH CAROLINA
DEPARTMENT OF TRANSPORTATION
RALEIGH

STANDARD
3'-0" X 1'-9"
PRESTRESSED CONCRETE
CORED SLAB UNIT
60° SKEW
SPANS A & C

REVISIONS						SHEET NO.
NO.	BY:	DATE:	NO.	BY:	DATE:	18
1			3			TOTAL SHEETS
2			4			36

ASSEMBLED BY :	Z. H. BROWN	DATE :	7/31/13
CHECKED BY :	W. A. DAVIS	DATE :	8/14/13
DRAWN BY :	DGE 5/09	REV. 12/11	MAA/AAC
CHECKED BY :	BCH 6/09		

11/14/2013 3:26:43 PM R:\Structures\Nash 32_50_CS_05.dgn

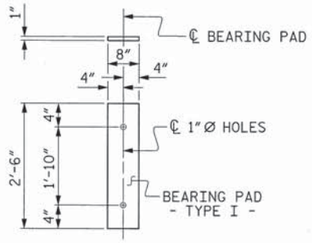

FIXED END
(TYPE I - 24 REQ'D)

ELASTOMERIC BEARING DETAILS

ELASTOMER IN ALL BEARINGS SHALL BE 60 DUROMETER HARDNESS.

GUTTERLINE CONCRETE WEARING SURFACE THICKNESS & RAIL HEIGHT

33'-10" CLEAR ROADWAY	CONCRETE WEARING SURFACE THICKNESS	RAIL HEIGHT
	@ MID-SPAN	@ MID-SPAN
	NORMAL CROWN SECTION	
60' UNITS	3⅞"	3'-9⅞"

BILL OF MATERIAL FOR ONE 60' CORED SLAB UNIT

				EXTERIOR UNIT		INTERIOR UNIT	
BAR	NUMBER	SIZE	TYPE	LENGTH	WEIGHT	LENGTH	WEIGHT
B20	6	#4	STR	21'-2"	85	21'-2"	85
S10	8	#5	3	5'-0"	42	5'-0"	42
S11	146	#4	3	5'-10"	569	5'-10"	569
✱S12	69	#5	1	6'-4"	456		
S14	4	#4	4	5'-11"	16	5'-11"	16
S15	4	#5	3	7'-1"	30	7'-1"	30
S16	4	#4	3	5'-11"	16	5'-11"	16
S17	4	#4	3	6'-1"	16	6'-1"	16
S18	4	#4	3	6'-3"	17	6'-3"	17
REINFORCING STEEL			LBS.		791		791
✱EPOXY COATED REINFORCING STEEL			LBS.		456		
7500 P.S.I. CONCRETE			CU. YDS.		10.4		10.4
0.6"Ø L.R. STRANDS			No.		22		22

BAR TYPES

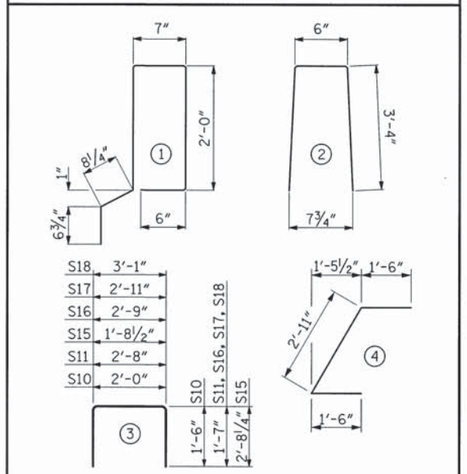

ALL BAR DIMENSIONS ARE OUT TO OUT

NOTES

ALL PRESTRESSING STRANDS SHALL BE 7-WIRE LOW RELAXATION GRADE 270 STRANDS AND SHALL CONFORM TO AASHTO M203 EXCEPT FOR SAMPLING REQUIREMENTS WHICH SHALL BE IN ACCORDANCE WITH THE STANDARD SPECIFICATIONS.

ALL REINFORCING STEEL CAST WITH THE CORED SLAB SECTIONS SHALL BE GRADE 60 AND SHALL BE INCLUDED IN THE UNIT PRICE BID FOR PRESTRESSED CONCRETE CORED SLABS.

RECESSES FOR TRANSVERSE STRANDS SHALL BE GROUTED AFTER THE TENSIONING OF THE STRANDS.

THE 2½"Ø DOWEL HOLES AT FIXED ENDS OF SLAB SECTIONS SHALL BE FILLED WITH NON-SHRINK GROUT.

THE BACKER RODS SHALL CONFORM TO THE REQUIREMENTS OF TYPE M BOND BREAKER. SEE SECTION 1028 OF THE STANDARD SPECIFICATIONS.

WHEN CORED SLABS ARE CAST, AN INTERNAL HOLD-DOWN SYSTEM SHALL BE EMPLOYED TO PREVENT VOIDS FROM RISING OR MOVING SIDEWAYS. AT LEAST SIX WEEKS PRIOR TO CASTING CORED SLABS, THE CONTRACTOR SHALL SUBMIT TO THE ENGINEER FOR REVIEW AND COMMENT, DETAILED DRAWINGS OF THE PROPOSED HOLD-DOWN SYSTEM. IN ADDITION TO STRUCTURAL DETAILS, LOCATION AND SPACING OF THE HOLD-DOWNS SHALL BE INDICATED.

THE TRANSFER OF LOAD FROM THE ANCHORAGES TO THE CORED SLAB UNIT SHALL BE DONE WHEN THE CONCRETE HAS REACHED A COMPRESSIVE STRENGTH OF NOT LESS THAN THE REQUIRED STRENGTH SHOWN IN THE "CONCRETE RELEASE STRENGTH" TABLE.

ALL REINFORCING STEEL IN VERTICAL CONCRETE BARRIER RAILS SHALL BE EPOXY COATED.

PRESTRESSING STRANDS SHALL BE CUT FLUSH WITH THE CORED SLAB UNIT ENDS.

APPLY EPOXY PROTECTIVE COATING TO CORED SLAB UNIT ENDS.

GROOVED CONTRACTION JOINTS, ½" IN DEPTH, SHALL BE TOOLED IN ALL EXPOSED FACES OF THE BARRIER RAIL AND IN ACCORDANCE WITH ARTICLE 825-10(B) OF THE STANDARD SPECIFICATIONS. A CONTRACTION JOINT SHALL BE LOCATED AT EACH THIRD POINT BETWEEN BARRIER RAIL EXPANSION JOINTS. ONLY ONE CONTRACTION JOINT IS REQUIRED AT MIDPOINT OF BARRIER RAIL SEGMENTS LESS THAN 20 FEET IN LENGTH AND NO CONTRACTION JOINTS ARE REQUIRED FOR THOSE SEGMENTS LESS THAN 10 FEET IN LENGTH.

TRANSVERSE POST TENSIONING OF THE CORED SLAB UNITS SHALL BE DONE IN ACCORDANCE WITH THE STANDARD SPECIFICATIONS.

MAINTAIN A SYMMETRIC TENSION FORCE BETWEEN EACH PAIR OF TRANSVERSE POST TENSIONING STRANDS IN THE DIAPHRAGM.

THE #4 S11 STIRRUPS MAY BE SHIFTED AS NECESSARY TO MAINTAIN 1" CLEAR TO THE GROUTED RECESS.

FOR GROUT FOR STRUCTURES, SEE SPECIAL PROVISIONS.

BILL OF MATERIAL FOR VERTICAL CONCRETE BARRIER RAIL

BAR	BARS PER PAIR OF EXTERIOR UNITS	TOTAL NO.	SIZE	TYPE	LENGTH	WEIGHT
	60' UNIT					
✱B23	80	80	#5	STR	16'-11"	1412
✱S13	138	138	#5	2	7'-2"	1032
✱EPOXY COATED REINFORCING STEEL				LBS.		2444
CLASS AA CONCRETE				CU.YDS.		16.2
TOTAL VERTICAL CONCRETE BARRIER RAIL				LN. FT.		120.29

CORED SLABS REQUIRED

	NUMBER	LENGTH	TOTAL LENGTH
60' UNIT			
EXTERIOR C.S.	2	60'-0"	120'-0"
INTERIOR C.S.	10	60'-0"	600'-0"
TOTAL	12	60'-0"	720'-0"

DEAD LOAD DEFLECTION AND CAMBER

	3'-0" x 2'-0"
60' CORED SLAB UNIT	0.6"Ø L.R. STRAND
CAMBER (SLAB ALONE IN PLACE)	2⅝" ↑
DEFLECTION DUE TO SUPERIMPOSED DEAD LOAD✱✱	¾" ↓
FINAL CAMBER	1⅞" ↑

✱✱ INCLUDES FUTURE WEARING SURFACE

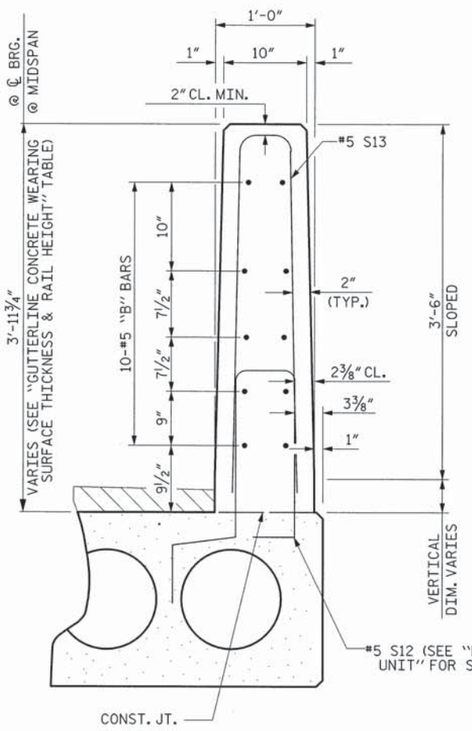

SECTION THRU RAIL

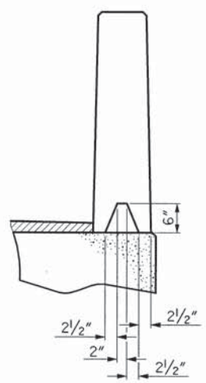

SECTION S-S
AT DAM IN OPEN JOINT
(THIS IS TO BE USED ONLY WHEN SLIP FORM IS USED)

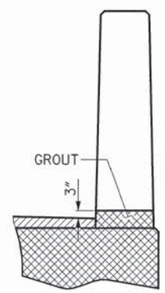

SECTION T-T
AT OPEN JOINT AT BENT
(THIS IS TO BE USED WHERE FOAM JOINT IS NOT USED)

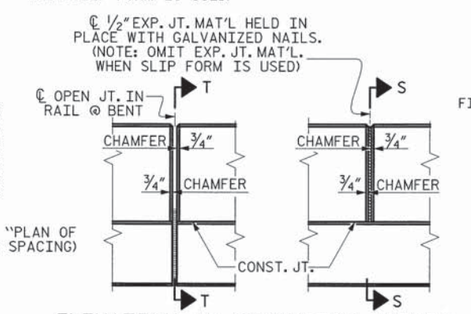

ELEVATION AT EXPANSION JOINTS

VERTICAL CONCRETE BARRIER RAIL DETAILS

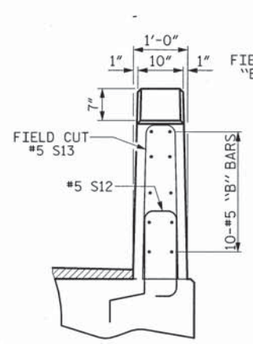

END VIEW

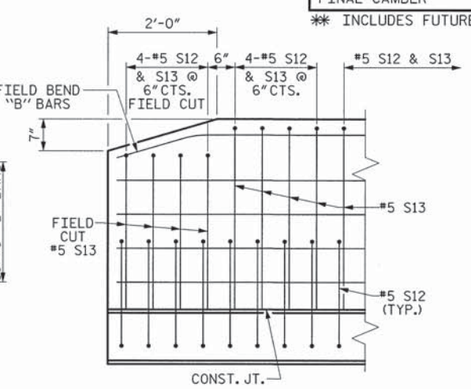

SIDE VIEW

END OF RAIL DETAILS

CONCRETE RELEASE STRENGTH

UNIT	PSI
60' UNITS	6000

GRADE 270 STRANDS

	0.6"Ø L.R.
AREA (SQUARE INCHES)	0.217
ULTIMATE STRENGTH (LBS. PER STRAND)	58,600
APPLIED PRESTRESS (LBS. PER STRAND)	43,950

THIS STANDARD DRAWING REVIEWED & ADOPTED FOR USE AT THE REFERENCED LOCATION BY THE UNDERSIGNED:

NORTH CAROLINA PROFESSIONAL ENGINEER SEAL 19661 KEVIN AUSTIN
11/15/13

PLANS PREPARED BY:
MULKEY ENGINEERS & CONSULTANTS
PO Box 33127
Raleigh, N.C. 27636
(919) 851-1912
(919) 851-1918 (FAX)
www.mulkeyinc.com
NC LICENSE NO. C-1021

PROJECT NO. 17BP.4.R.52
NASH COUNTY
STATION: 15+28.67 -L-

STATE OF NORTH CAROLINA
DEPARTMENT OF TRANSPORTATION
RALEIGH

STANDARD
3'-0" X 2'-0"
PRESTRESSED CONCRETE
CORED SLAB UNIT

SPAN B

REVISIONS						SHEET NO.
NO.	BY:	DATE:	NO.	BY:	DATE:	19
1			3			TOTAL SHEETS
2			4			36

ASSEMBLED BY : Z. H. BROWN		DATE : 7/31/13	
CHECKED BY : W. A. DAVIS		DATE : 8/14/13	
DRAWN BY : MAA	6/10	REV. 12/11	MAA/AAC
CHECKED BY : MKT	7/10		

11/14/2013 4:05:04 PM R:\Structures\Nash 32-50_CS_06.dgn

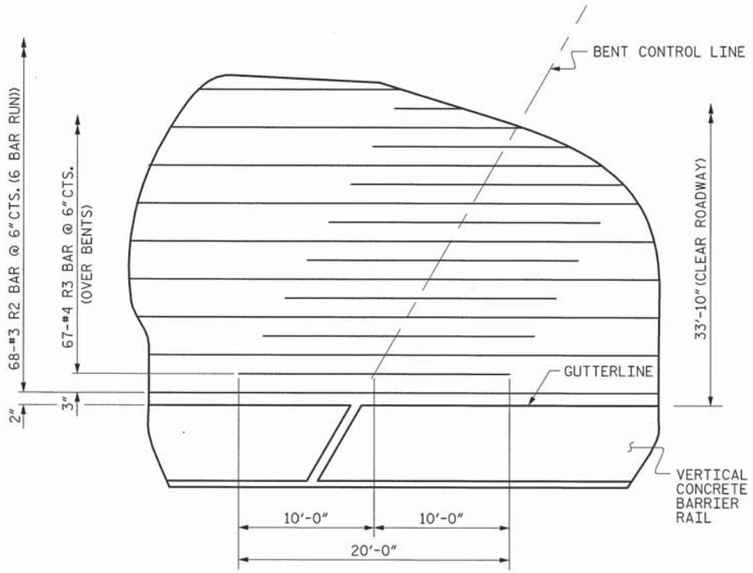

PLAN @ BENTS

R1 BARS NOT SHOWN FOR CLARITY.

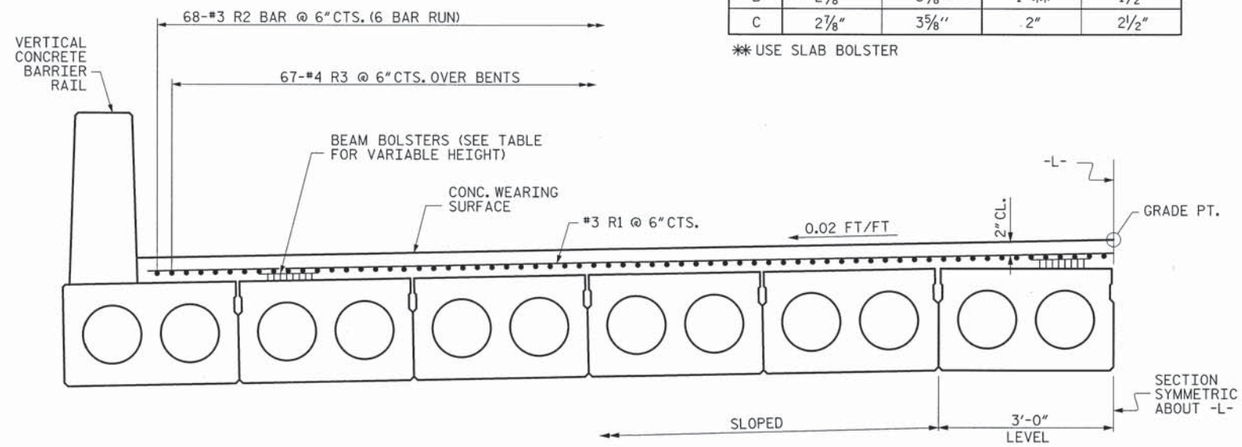

REINFORCING STEEL AND BEAM BOLSTER HEIGHTS

NOTE: BEAM AND SLAB BOLSTER HEIGHTS BASED ON PREDICTED FINAL CAMBER AND THEORETICAL GRADE LINE ELEVATION AND VARY BETWEEN ℄ BEARING AND MID-SPAN FOR ALL SPANS.

BEAM BOLSTER HEIGHT

SPAN	AT ℄ BEARINGS		AT MID-SPAN	
	GUTTERS	GRADE PT.	GUTTERS	GRADE PT.
A	2 7/8"	3 5/8"	2"	2 1/2"
B	2 7/8"	3 5/8"	1"✱✱	1 1/2"
C	2 7/8"	3 5/8"	2"	2 1/2"

✱✱ USE SLAB BOLSTER

BILL OF MATERIAL

CONCRETE WEARING SURFACE

BAR	NO.	SIZE	TYPE	LENGTH	WEIGHT
✱R1	522	#3	STR	17'-5"	3418
✱R100	4	#3	STR	17'-2"	26
✱R101	4	#3	STR	16'-9"	25
✱R102	4	#3	STR	16'-4"	25
✱R103	4	#3	STR	15'-10"	24
✱R104	2	#3	STR	29'-8"	22
✱R105	2	#3	STR	28'-10"	22
✱R106	2	#3	STR	27'-11"	21
✱R107	2	#3	STR	27'-1"	20
✱R108	2	#3	STR	26'-2"	20
✱R109	2	#3	STR	25'-4"	19
✱R110	2	#3	STR	24'-6"	18
✱R111	2	#3	STR	23'-7"	18
✱R112	2	#3	STR	22'-9"	17
✱R113	2	#3	STR	21'-10"	16
✱R114	2	#3	STR	21'-0"	16
✱R115	2	#3	STR	20'-2"	15
✱R116	2	#3	STR	19'-3"	14
✱R117	2	#3	STR	18'-5"	14
✱R118	2	#3	STR	17'-6"	13
✱R119	2	#3	STR	16'-8"	13
✱R120	2	#3	STR	15'-10"	12
✱R121	2	#3	STR	14'-11"	11
✱R122	2	#3	STR	14'-1"	11
✱R123	2	#3	STR	13'-2"	10
✱R124	2	#3	STR	12'-4"	9
✱R125	2	#3	STR	11'-6"	9
✱R126	2	#3	STR	10'-7"	8
✱R127	2	#3	STR	9'-9"	7
✱R128	2	#3	STR	8'-11"	7
✱R129	2	#3	STR	8'-0"	6
✱R130	2	#3	STR	7'-2"	5
✱R131	2	#3	STR	6'-3"	5
✱R132	2	#3	STR	5'-5"	4
✱R133	2	#3	STR	4'-7"	3
✱R134	2	#3	STR	3'-8"	3
✱R135	2	#3	STR	2'-10"	2
✱R136	2	#3	STR	1'-11"	1
✱R2	408	#3	STR	26'-0"	3989
✱R3	134	#4	STR	20'-0"	1790

✱EPOXY COATED REINF. STEEL = 9,688 LBS

CONCRETE WEARING SURFACE = 5,085 SQ. FT.

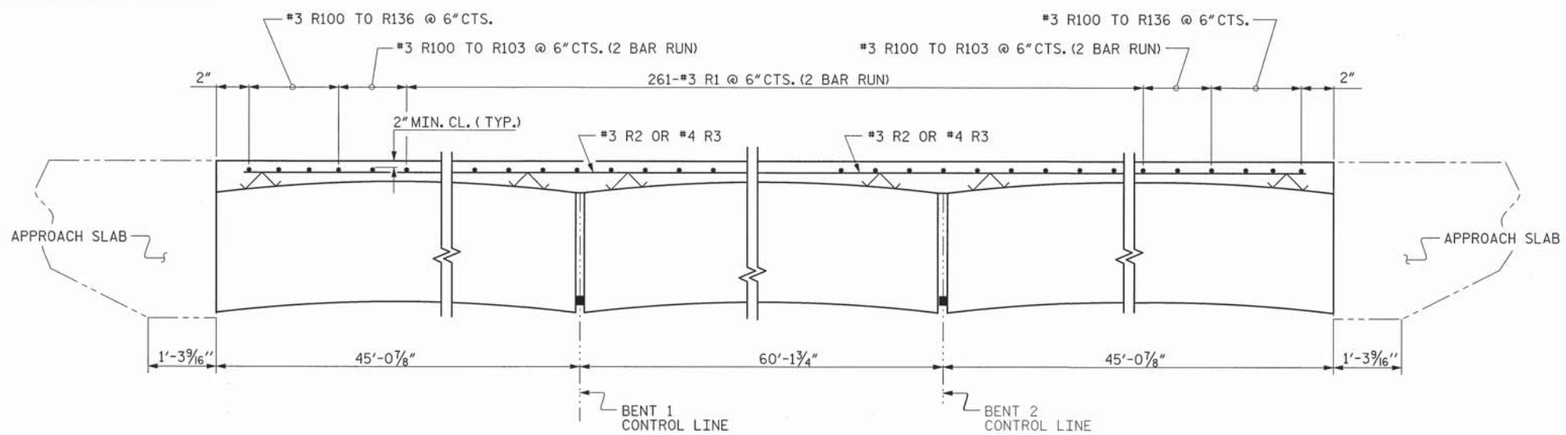

ELEVATION OF THE CONCRETE WEARING SURFACE

SPLICE LENGTH CHART

BAR SIZE	EPOXY COATED
#3	1'-3"

GROOVING BRIDGE FLOOR QUANTITY

	AREA (SQ. FT.)
BRIDGE DECK	4622
APPROACH SLABS	910
TOTAL	5532

PROJECT NO. 17BP.4.R.52

NASH COUNTY

STATION: 15+28.67 -L-

NOTES:

PLACEMENT OF THE CONCRETE WEARING SURFACE SHALL OCCUR AFTER CASTING THE VERTICAL CONCRETE BARRIER RAILS. THE COST OF THE REINFORCING STEEL CAST WITH THE CONCRETE WEARING SURFACE SHALL BE INCLUDED IN THE UNIT PRICE BID FOR CONCRETE WEARING SURFACE. FOR CONCRETE WEARING SURFACE, SEE SPECIAL PROVISIONS.

ALL REINFORCING FOR THE CONCRETE WEARING SURFACE SHALL BE EPOXY COATED.

PLANS PREPARED BY:
MULKEY ENGINEERS & CONSULTANTS
PO Box 33127
RALEIGH, N.C. 27636
(919) 851-1912
(919) 851-1918 (FAX)
WWW.MULKEYINC.COM
NC LICENSE NO. C-1021

THIS STANDARD DRAWING REVIEWED & ADOPTED FOR USE AT THE REFERENCED LOCATION BY THE UNDERSIGNED:

NORTH CAROLINA PROFESSIONAL ENGINEER SEAL 19661 KEVIN AUSTIN 11/15/13

STATE OF NORTH CAROLINA
DEPARTMENT OF TRANSPORTATION
RALEIGH

SUPERSTRUCTURE

CONCRETE WEARING SURFACE DETAILS

REVISIONS							
NO.	BY:	DATE:	NO.	BY:	DATE:	SHEET NO.	20
1			3			TOTAL SHEETS	36
2			4				

DRAWN BY : Z. H. BROWN DATE : 8/1/13
CHECKED BY : W. A. DAVIS DATE : 8/19/13

11/14/2013 3:19:51 PM R:\Structures\Nash 32_SD_CWS_01.dgn

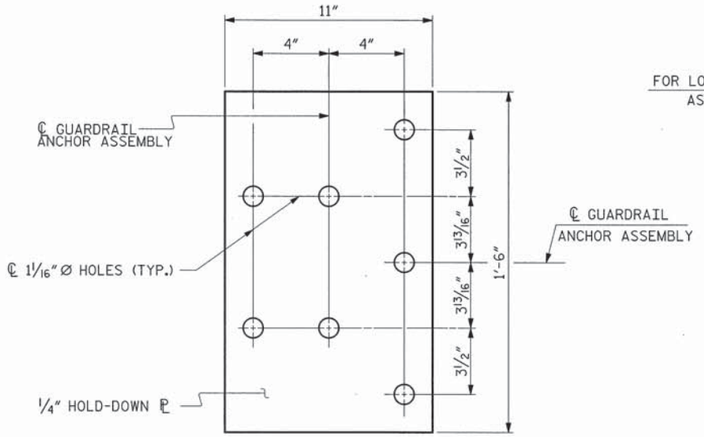

PLAN

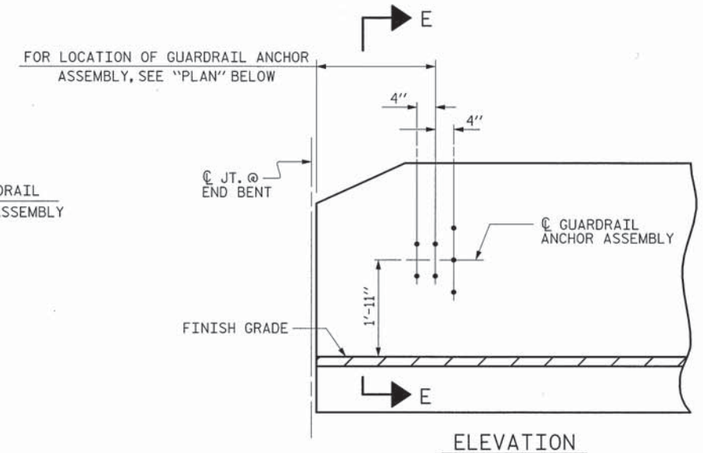

ELEVATION

NOTES

THE GUARDRAIL ANCHOR ASSEMBLY SHALL CONSIST OF A 1/4" HOLD DOWN PLATE AND 7 - 7/8" Ø BOLTS WITH NUTS AND WASHERS.

THE HOLD-DOWN PLATE SHALL CONFORM TO AASHTO M270 GRADE 36. AFTER FABRICATION, THE HOLD-DOWN PLATE SHALL BE HOT-DIP GALVANIZED IN ACCORDANCE WITH AASHTO M111.

BOLTS SHALL CONFORM TO THE REQUIREMENTS OF ASTM A307 AND NUTS SHALL CONFORM TO THE REQUIREMENTS OF AASHTO M291. BOLTS, NUTS AND WASHERS SHALL BE GALVANIZED. (AT THE CONTRACTOR'S OPTION, STAINLESS STEEL BOLTS, NUTS AND WASHERS MAY BE USED AS AN ALTERNATE FOR THE 7/8" Ø GALVANIZED BOLTS, NUTS AND WASHERS. THEY SHALL CONFORM TO OR EXCEED THE MECHANICAL REQUIREMENTS OF ASTM A307. THE USE OF THIS ALTERNATE SHALL BE APPROVED BY THE ENGINEER.)

THE GUARDRAIL ANCHOR ASSEMBLY IS REQUIRED AT ALL POINTS WHERE APPROACH GUARDRAIL IS TO BE ATTACHED TO THE END OF BARRIER RAIL. FOR POINTS OF ATTACHMENT, SEE SKETCH.

AFTER INSTALLATION, THE EXPOSED THREAD OF THE BOLT SHALL BE BURRED WITH A SHARP POINTED TOOL.

THE COST OF THE GUARDRAIL ANCHOR ASSEMBLY SHALL BE INCLUDED IN THE UNIT CONTRACT PRICE BID FOR VERTICAL CONCRETE BARRIER RAIL.

THE VERTICAL REINFORCING BARS MAY BE SHIFTED SLIGHTLY IN THE VERTICAL CONCRETE BARRIER RAIL TO CLEAR ASSEMBLY BOLTS.

THE 1 1/4" Ø HOLES SHALL BE FORMED OR DRILLED WITH A CORE BIT. IMPACT TOOLS WILL NOT BE PERMITTED. ANY CONCRETE DAMAGED BY THIS WORK SHALL BE REPAIRED TO THE SATISFACTION OF THE ENGINEER.

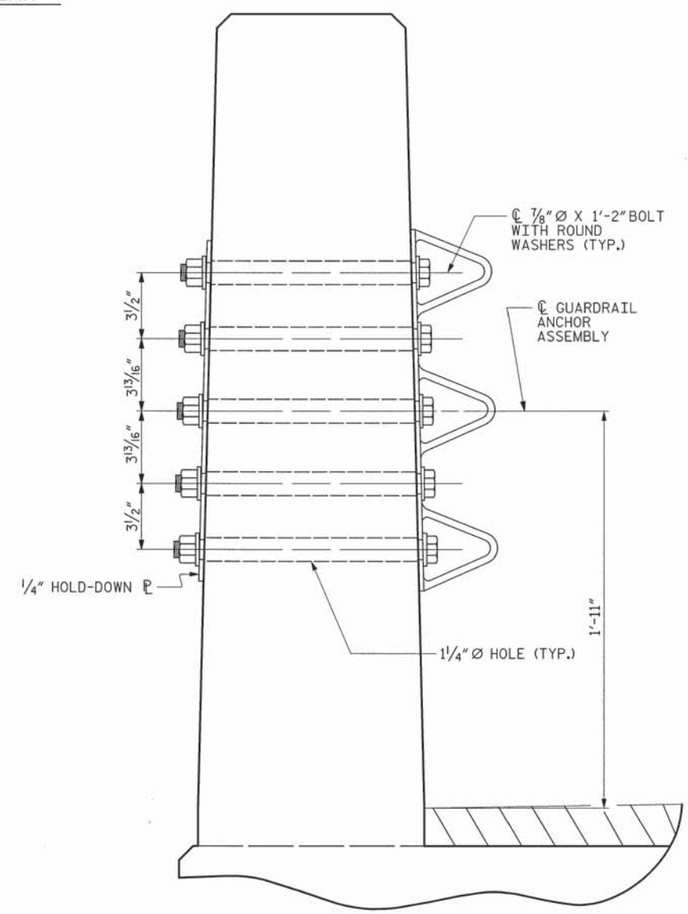

SECTION E-E

GUARDRAIL ANCHOR ASSEMBLY DETAILS

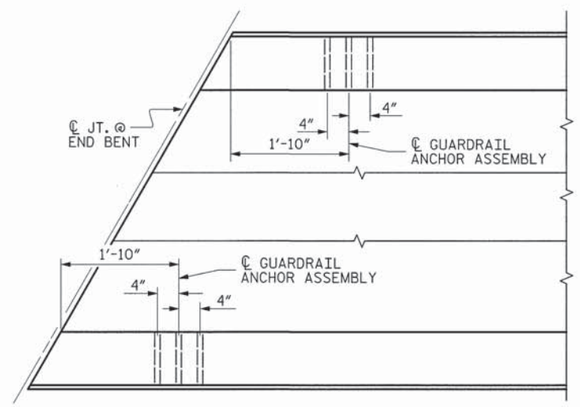

PLAN

LOCATION OF ANCHORS FOR GUARDRAIL

END BENT #1 SHOWN, END BENT #2 SIMILAR.

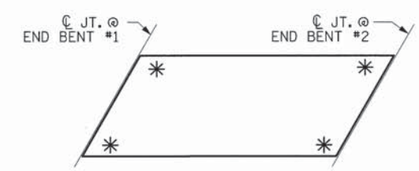

SKETCH SHOWING POINTS OF ATTACHMENT

✳ DENOTES GUARDRAIL ANCHOR ASSEMBLY

PROJECT NO. 17BP.4.R.52

NASH COUNTY

STATION: 15+28.67 -L-

THIS STANDARD DRAWING REVIEWED & ADOPTED FOR USE AT THE REFERENCED LOCATION BY THE UNDERSIGNED:

NORTH CAROLINA PROFESSIONAL SEAL ENGINEER 19661 L. KEVIN AUSTIN 11/15/13

PLANS PREPARED BY:

MULKEY ENGINEERS & CONSULTANTS
PO Box 33127
Raleigh, N.C. 27636
(919) 851-1912
(919) 851-1918 (FAX)
WWW.MULKEYINC.COM
NC LICENSE NO. C-1031

STATE OF NORTH CAROLINA
DEPARTMENT OF TRANSPORTATION
RALEIGH

STANDARD
GUARDRAIL ANCHORAGE FOR VERTICAL CONCRETE BARRIER RAIL

REVISIONS							SHEET NO.
NO.	BY:	DATE:	NO.	BY:	DATE:		21
1			3				TOTAL SHEETS
2			4				36

STD. NO. GRA3

ASSEMBLED BY : Z. H. BROWN		DATE : 8/1/13	
CHECKED BY : W. A. DAVIS		DATE : 8/19/13	
DRAWN BY : MAA 5/10	ADDED 5/6/10		
CHECKED BY : GM 5/10	REV. 10/1/11		MAA/GM
	REV. 12/5/11		MAA/GM

11/14/2013 4:03:59 PM R:\Structures\Nash 32.50.GR.GRA3.dgn

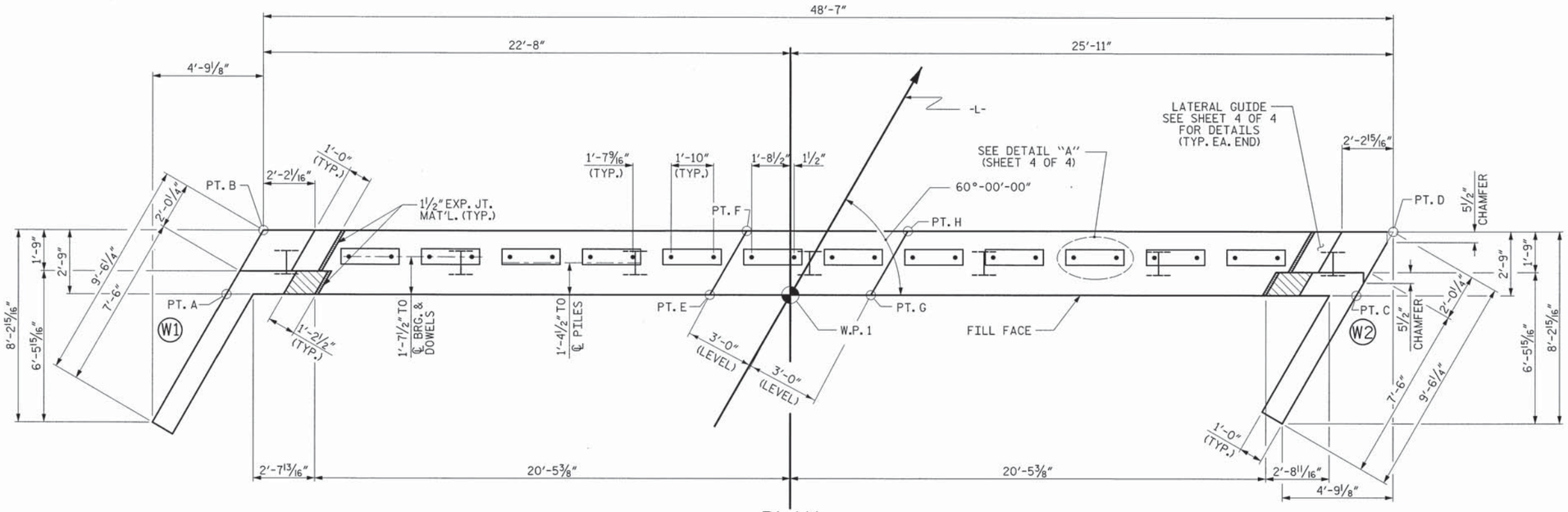

PLAN

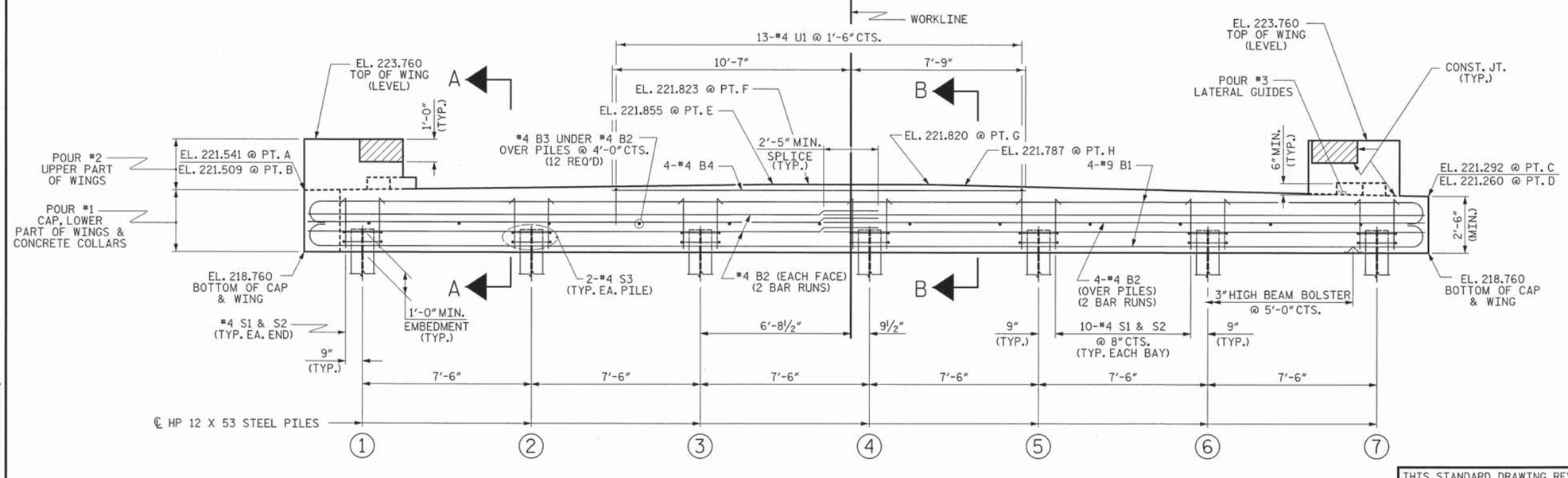

ELEVATION

WINGS NOT SHOWN FOR CLARITY.
FOR SECTION A-A, SEE SHEET 4 OF 4.
CONCRETE COLLARS FOR STEEL PILES NOT SHOWN IN PLAN AND ELEVATION VIEWS FOR CLARITY.
SEE "CORROSION PROTECTION FOR STEEL PILES DETAIL", SHEET 4 OF 4.

NOTES

STIRRUPS IN CAP MAY BE SHIFTED AS NECESSARY TO CLEAR DOWELS.

THE LATERAL GUIDES ARE NOT TO BE POURED UNTIL AFTER THE CORED SLAB UNITS ARE IN PLACE.

THE CONCRETE IN THE SHADED AREA OF THE WING SHALL BE POURED AFTER THE VERTICAL CONCRETE BARRIER RAIL IS CAST IF SLIP FORMING IS USED.

FOR PILE SPLICE DETAILS, SEE SHEET 4 OF 4.

FOR WING DETAILS, SEE SHEET 3 OF 4.

THE CONTRACTOR HAS THE OPTION TO OMIT THE LATERAL GUIDE IF APPROVED BY THE ENGINEER.

PROJECT NO. 17BP.4.R.52
NASH COUNTY
STATION: 15+28.67 -L-

SHEET 1 OF 4

STATE OF NORTH CAROLINA
DEPARTMENT OF TRANSPORTATION
RALEIGH

SUBSTRUCTURE
END BENT No. 1

THIS STANDARD DRAWING REVIEWED & ADOPTED FOR USE AT THE REFERENCED LOCATION BY THE UNDERSIGNED:

NORTH CAROLINA PROFESSIONAL SEAL 19661 ENGINEER KEVIN AUSTIN 11/15/13

PLANS PREPARED BY:
MULKEY ENGINEERS & CONSULTANTS
PO Box 33127 Raleigh, N.C. 27636
(919) 851-1912
(919) 851-1918 (FAX)
WWW.MULKEYINC.COM
NC LICENSE NO. C-1321

REVISIONS						SHEET NO.
NO.	BY:	DATE:	NO.	BY:	DATE:	22
1			3			TOTAL SHEETS
2			4			36

ASSEMBLED BY : Z. H. BROWN DATE : 7/25/13
CHECKED BY : W. A. DAVIS DATE : 8/20/13

11/14/2013 3:05:29 PM R:\Structures\Nash 32_SD_EL01.dgn

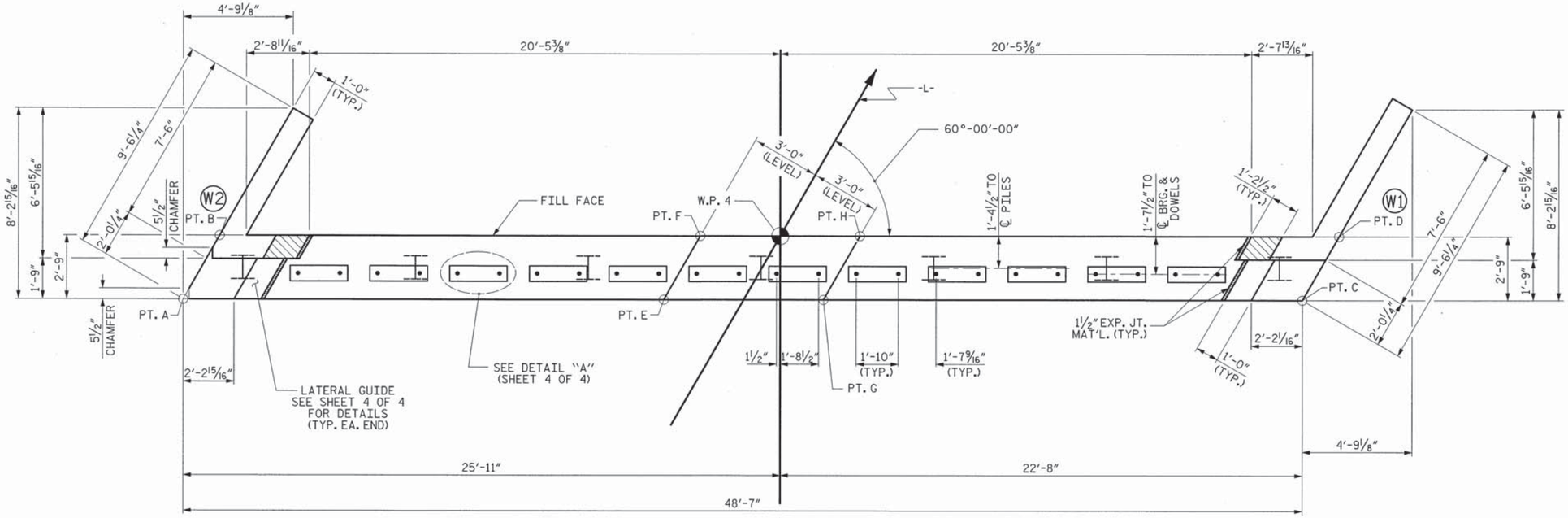

PLAN

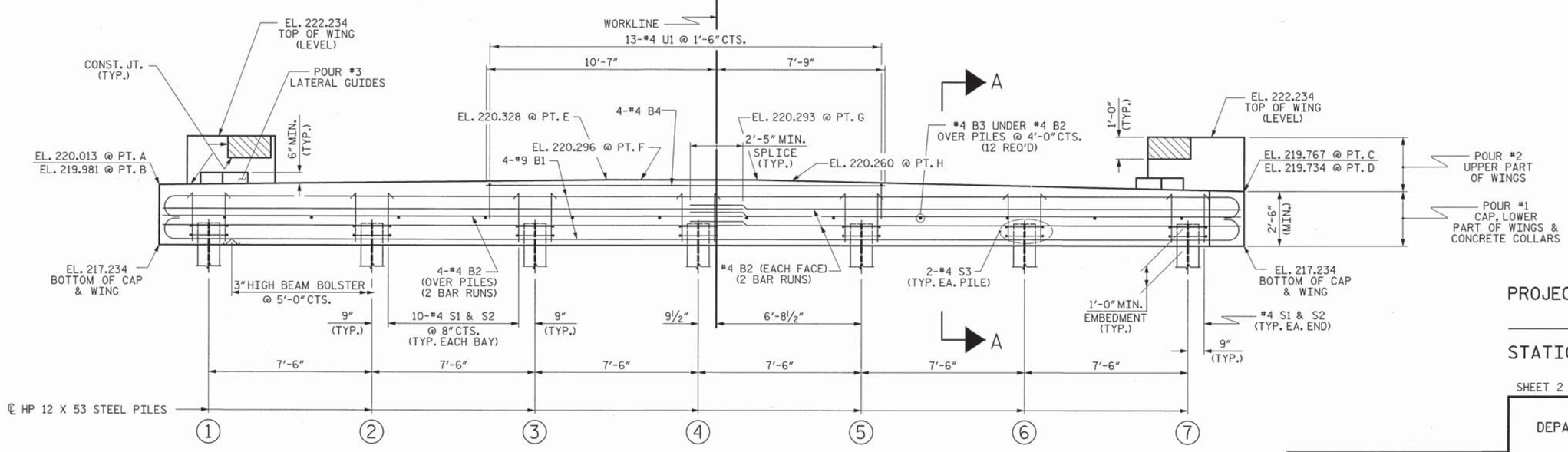

ELEVATION

WINGS NOT SHOWN FOR CLARITY.
FOR SECTION A-A, SEE SHEET 4 OF 4.
CONCRETE COLLARS FOR STEEL PILES NOT SHOWN IN PLAN AND ELEVATION VIEWS FOR CLARITY.
SEE "CORROSION PROTECTION FOR STEEL PILES DETAIL", SHEET 4 OF 4.

NOTES

STIRRUPS IN CAP MAY BE SHIFTED AS NECESSARY TO CLEAR DOWELS.

THE LATERAL GUIDES ARE NOT TO BE POURED UNTIL AFTER THE CORED SLAB UNITS ARE IN PLACE.

THE CONCRETE IN THE SHADED AREA OF THE WING SHALL BE POURED AFTER THE VERTICAL CONCRETE BARRIER RAIL IS CAST IF SLIP FORMING IS USED.

FOR PILE SPLICE DETAILS, SEE SHEET 4 OF 4.

FOR WING DETAILS, SEE SHEET 3 OF 4.

THE CONTRACTOR HAS THE OPTION TO OMIT THE LATERAL GUIDE IF APPROVED BY THE ENGINEER.

PROJECT NO. 17BP.4.R.52
NASH COUNTY
STATION: 15+28.67 -L-

SHEET 2 OF 4

STATE OF NORTH CAROLINA
DEPARTMENT OF TRANSPORTATION
RALEIGH

SUBSTRUCTURE
END BENT No. 2

THIS STANDARD DRAWING REVIEWED & ADOPTED FOR USE AT THE REFERENCED LOCATION BY THE UNDERSIGNED:

NORTH CAROLINA PROFESSIONAL ENGINEER SEAL 19661 KEVIN AUSTIN 11/15/13

PLANS PREPARED BY:
MULKEY ENGINEERS & CONSULTANTS
PO Box 33127 Raleigh, N.C. 27636 (919) 851-1912 (PHONE) (919) 851-1918 (FAX) WWW.MULKEYINC.COM
NC LICENSE NO. C-1021

REVISIONS									
NO.	BY:	DATE:	NO.	BY:	DATE:	SHEET NO. 23
1			3			
2			4			TOTAL SHEETS 36

ASSEMBLED BY : Z. H. BROWN DATE : 7/25/13
CHECKED BY : W. A. DAVIS DATE : 8/20/13
DRAWN BY : DGE 02/10
CHECKED BY : MKT 02/10

11/14/2013 4:06:30 PM R:\Structures\Nash 32_SD_E2_01.dgn

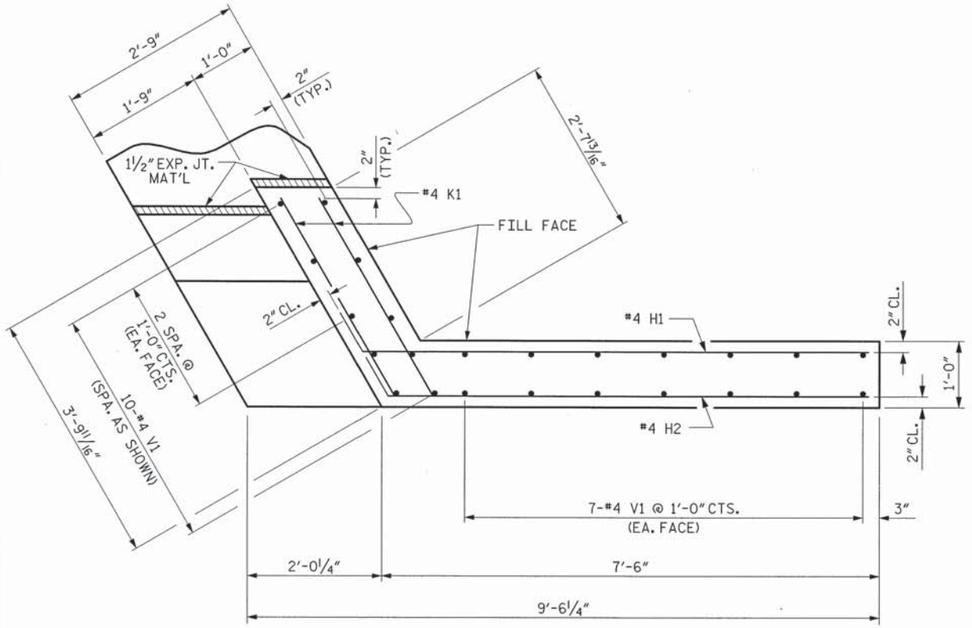

PLAN OF WING (W1)

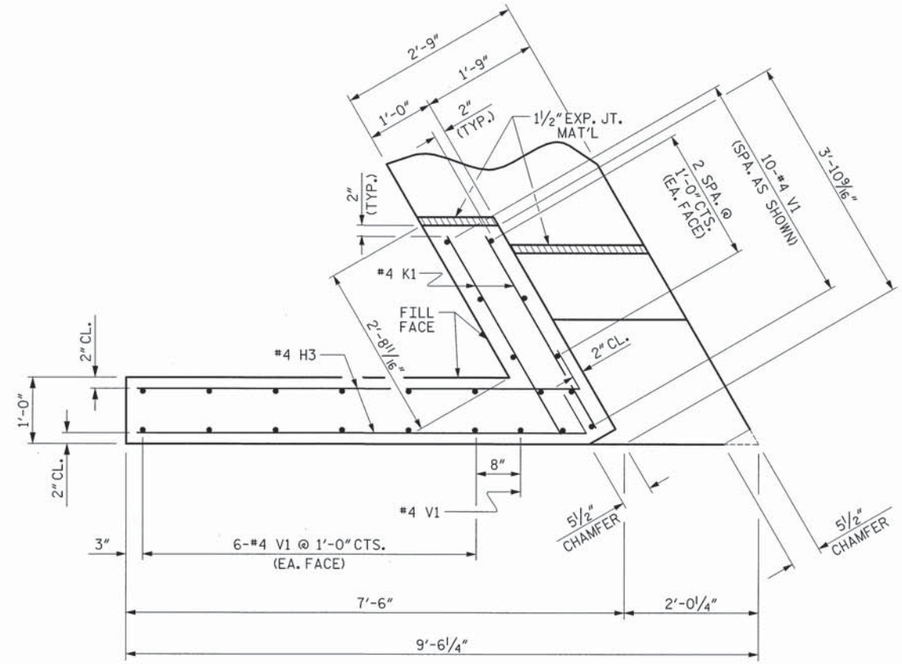

PLAN OF WING (W2)

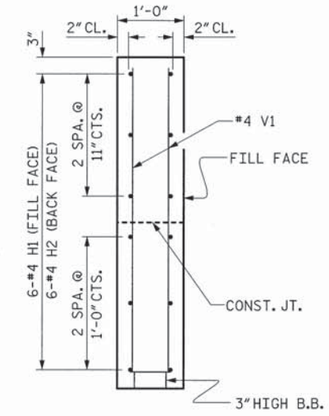

SECTION X-X

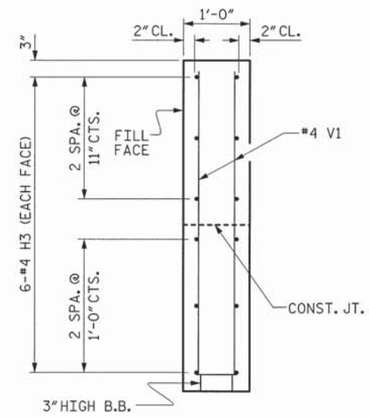

SECTION Y-Y

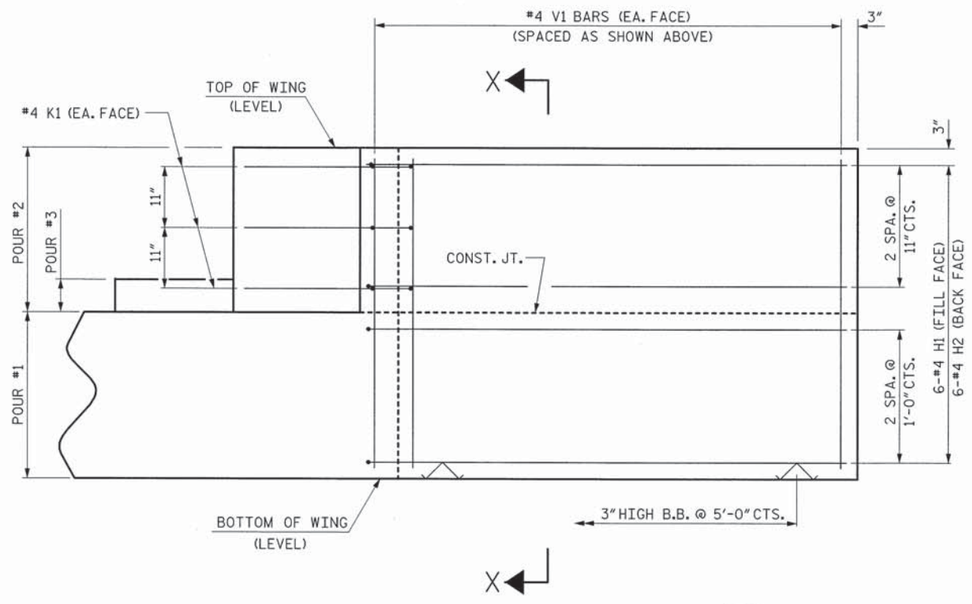

ELEVATION OF WING (W1)

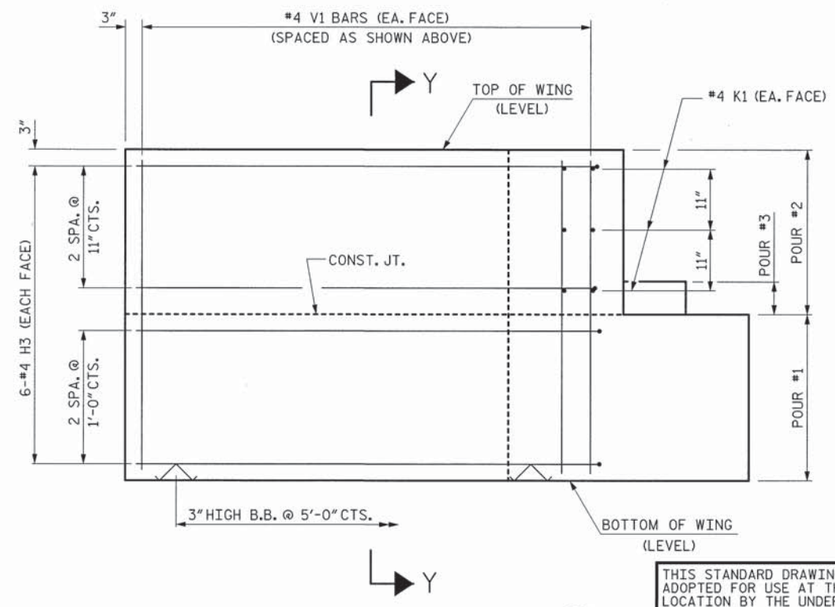

ELEVATION OF WING (W2)

WING DETAILS

PROJECT NO. 17BP.4.R.52

NASH COUNTY

STATION: 15+28.67 -L-

SHEET 3 OF 4

THIS STANDARD DRAWING REVIEWED & ADOPTED FOR USE AT THE REFERENCED LOCATION BY THE UNDERSIGNED:

NORTH CAROLINA PROFESSIONAL SEAL ENGINEER 19661 KEVIN AUSTIN 11/15/13

PLANS PREPARED BY:

MULKEY ENGINEERS & CONSULTANTS
PO Box 33127
Raleigh, N.C. 27636
(919) 851-1912
(919) 851-1918 (FAX)
WWW.MULKEYINC.COM
NC LICENSE NO. C-1021

STATE OF NORTH CAROLINA
DEPARTMENT OF TRANSPORTATION
RALEIGH

SUBSTRUCTURE
END BENT
WING DETAILS

REVISIONS						SHEET NO.
NO.	BY:	DATE:	NO.	BY:	DATE:	24
1			3			TOTAL SHEETS
2			4			36

ASSEMBLED BY : Z. H. BROWN	DATE : 7/29/13	
CHECKED BY : W. A. DAVIS	DATE : 8/20/13	
DRAWN BY : DGE	02/10	
CHECKED BY : MKT	02/10	

8/14/2013 3:53:57 PM R:\Structures\Nash 32.50.EB\E2_02.dgn

STD. NO. EB_36_60S

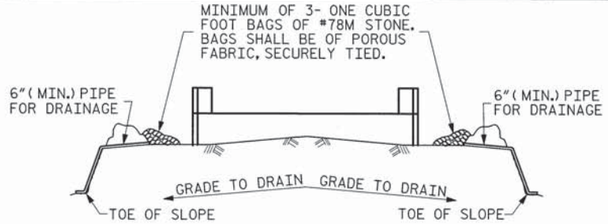

BAGGED STONE AND PIPE SHALL BE PLACED IMMEDIATELY AFTER COMPLETION OF END BENT EXCAVATION. PIPE MAY BE EITHER CONCRETE, CORRUGATED STEEL, CORRUGATED ALUMINUM ALLOY, OR CORRUGATED PLASTIC. PERFORATED PIPE WILL NOT BE ALLOWED.

BAGGED STONE SHALL REMAIN IN PLACE UNTIL THE ENGINEER DIRECTS THAT IT BE REMOVED. THE CONTRACTOR SHALL REMOVE AND DISPOSE OF SILT ACCUMULATIONS AT BAGGED STONE WHEN SO DIRECTED BY THE ENGINEER. BAGS SHALL BE REMOVED AND REPLACED WHENEVER THE ENGINEER DETERMINES THAT THEY HAVE DETERIORATED AND LOST THEIR EFFECTIVENESS.

NO SEPARATE PAYMENT WILL BE MADE FOR THIS WORK AND THE ENTIRE COST OF THIS WORK SHALL BE INCLUDED IN THE UNIT CONTRACT PRICE BID FOR THE SEVERAL PAY ITEMS.

TEMPORARY DRAINAGE AT END BENT

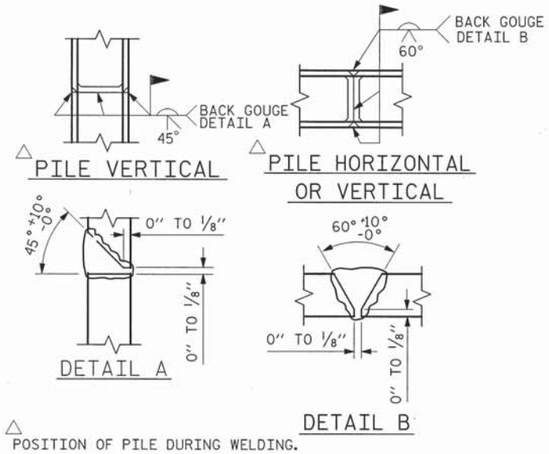

△ POSITION OF PILE DURING WELDING.

PILE SPLICE DETAILS

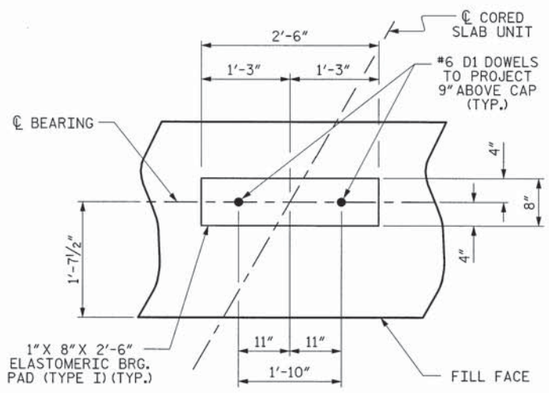

DETAIL "A"

(END BENT No. 1 SHOWN, END BENT No. 2 SIMILAR BY ROTATION)

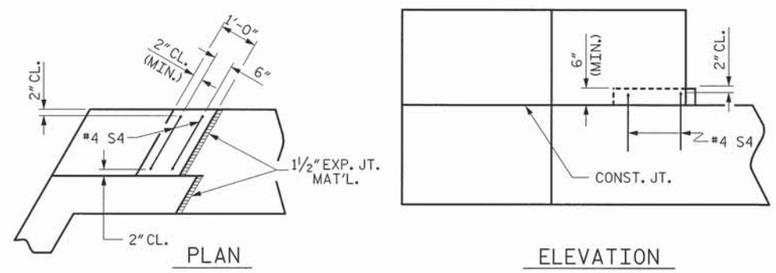

LATERAL GUIDE DETAILS

(END BENT No. 1, LEFT LATERAL GUIDE SHOWN, RIGHT END SIMILAR)
(END BENT No. 2 SIMILAR BY ROTATION)

BAR TYPES

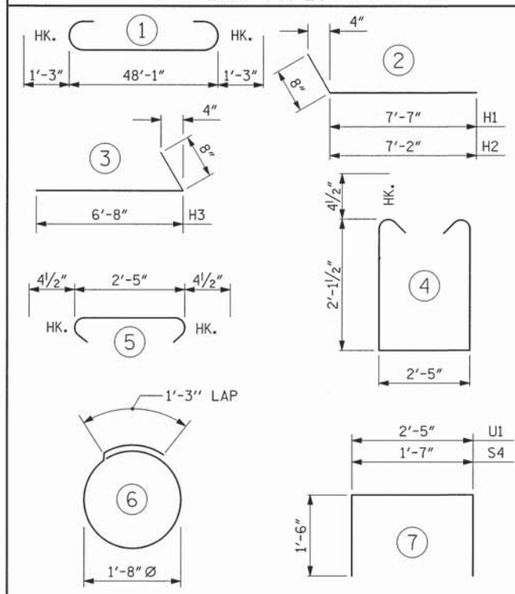

ALL BAR DIMENSIONS ARE OUT TO OUT.

END BENT No. 1	END BENT No. 2
HP 12 X 53 STEEL PILES	HP 12 X 53 STEEL PILES
NO: 7 LIN. FT.= 125	NO: 7 LIN. FT.= 140
PILE EXCAVATION IN SOIL LIN. FT.= 80	PILE EXCAVATION IN SOIL LIN. FT.= 100
STEEL PILE POINTS 7 EA.	STEEL PILE POINTS 7 EA.

BILL OF MATERIAL FOR ONE END BENT

BAR	NO.	SIZE	TYPE	LENGTH	WEIGHT
B1	8	#9	1	50'-7"	1376
B2	16	#4	STR	25'-4"	271
B3	12	#4	STR	2'-5"	19
B4	4	#4	STR	18'-4"	49
D1	24	#6	STR	1'-6"	54
H1	6	#4	2	8'-3"	33
H2	6	#4	2	7'-10"	31
H3	12	#4	3	7'-4"	59
K1	12	#4	STR	3'-3"	26
S1	62	#4	4	7'-5"	307
S2	62	#4	5	3'-2"	131
S3	14	#4	6	6'-6"	61
S4	4	#4	7	4'-7"	12
U1	13	#4	7	5'-5"	47
V1	47	#4	STR	4'-8"	147
REINFORCING STEEL (FOR ONE END BENT)					2623 LBS.

CLASS A CONCRETE BREAKDOWN (FOR ONE END BENT)

POUR #1	CAP, LOWER PART OF WINGS & COLLARS	16.5 C.Y.
POUR #2	UPPER PART OF WINGS	1.9 C.Y.
POUR #3	LATERAL GUIDES	0.1 C.Y.
TOTAL CLASS A CONCRETE		16.8 C.Y.

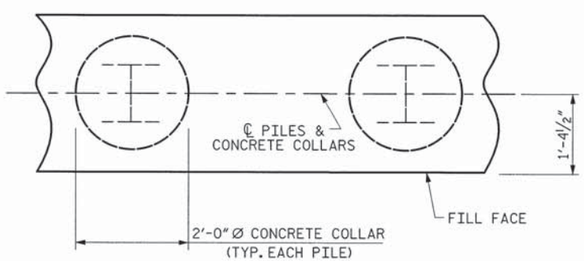

PLAN

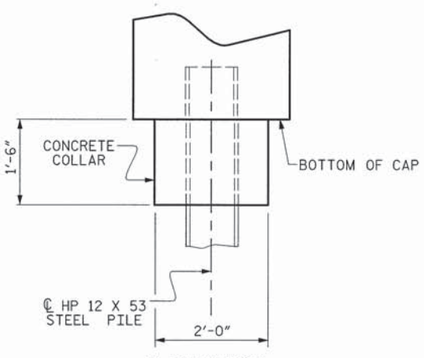

ELEVATION

CORROSION PROTECTION FOR STEEL PILES DETAIL

(END BENT No. 1 SHOWN, END BENT No. 2 SIMILAR BY ROTATION)

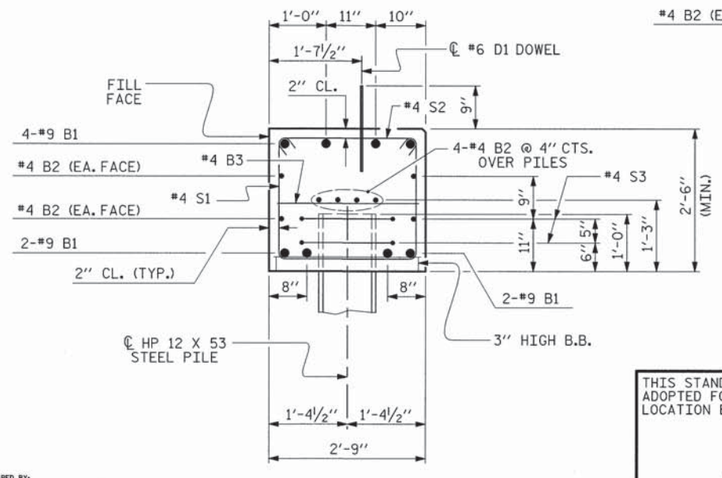

SECTION A-A

(CONCRETE COLLAR NOT SHOWN FOR CLARITY.
SEE "CORROSION PROTECTION FOR STEEL PILES DETAIL.")

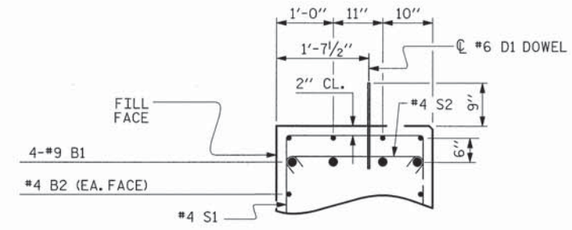

PARTIAL SECTION B-B

PROJECT NO. 17BP.4.R.52
NASH COUNTY
STATION: 15+28.67 -L-

SHEET 4 OF 4

STATE OF NORTH CAROLINA
DEPARTMENT OF TRANSPORTATION
RALEIGH

SUBSTRUCTURE

END BENT No. 1 & 2 DETAILS

THIS STANDARD DRAWING REVIEWED & ADOPTED FOR USE AT THE REFERENCED LOCATION BY THE UNDERSIGNED:

NORTH CAROLINA PROFESSIONAL SEAL 19661 ENGINEER KEVIN AUSTIN
11/15/13

REVISIONS							SHEET NO.
NO.	BY:	DATE:	NO.	BY:	DATE:		25
1			3				TOTAL SHEETS
2			4				36

ASSEMBLED BY : Z. H. BROWN	DATE : 7/29/13
CHECKED BY : W. A. DAVIS	DATE : 8/20/13
DRAWN BY : DGE 02/10	
CHECKED BY : MKT 02/10	

PLANS PREPARED BY:
MULKEY ENGINEERS & CONSULTANTS
PO Box 33127 RALEIGH, N.C. 27636
(919) 851-1912
(919) 851-1918 (FAX)
WWW.MULKEYINC.COM
NC LICENSE NO. C-1021

STD. NO. EB_36_60S

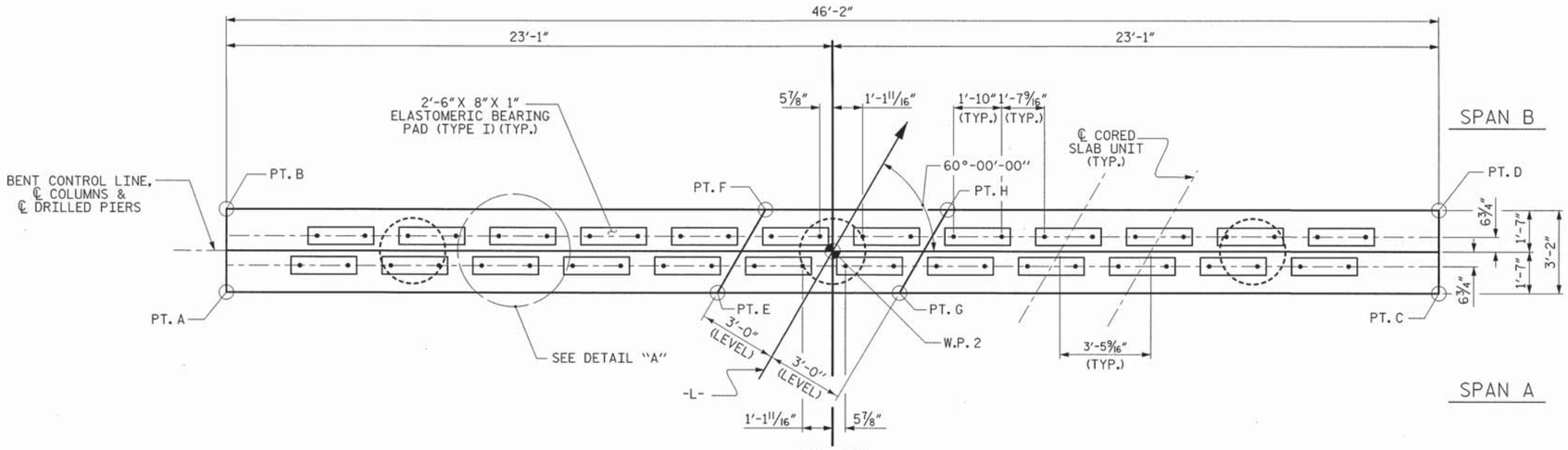

PLAN

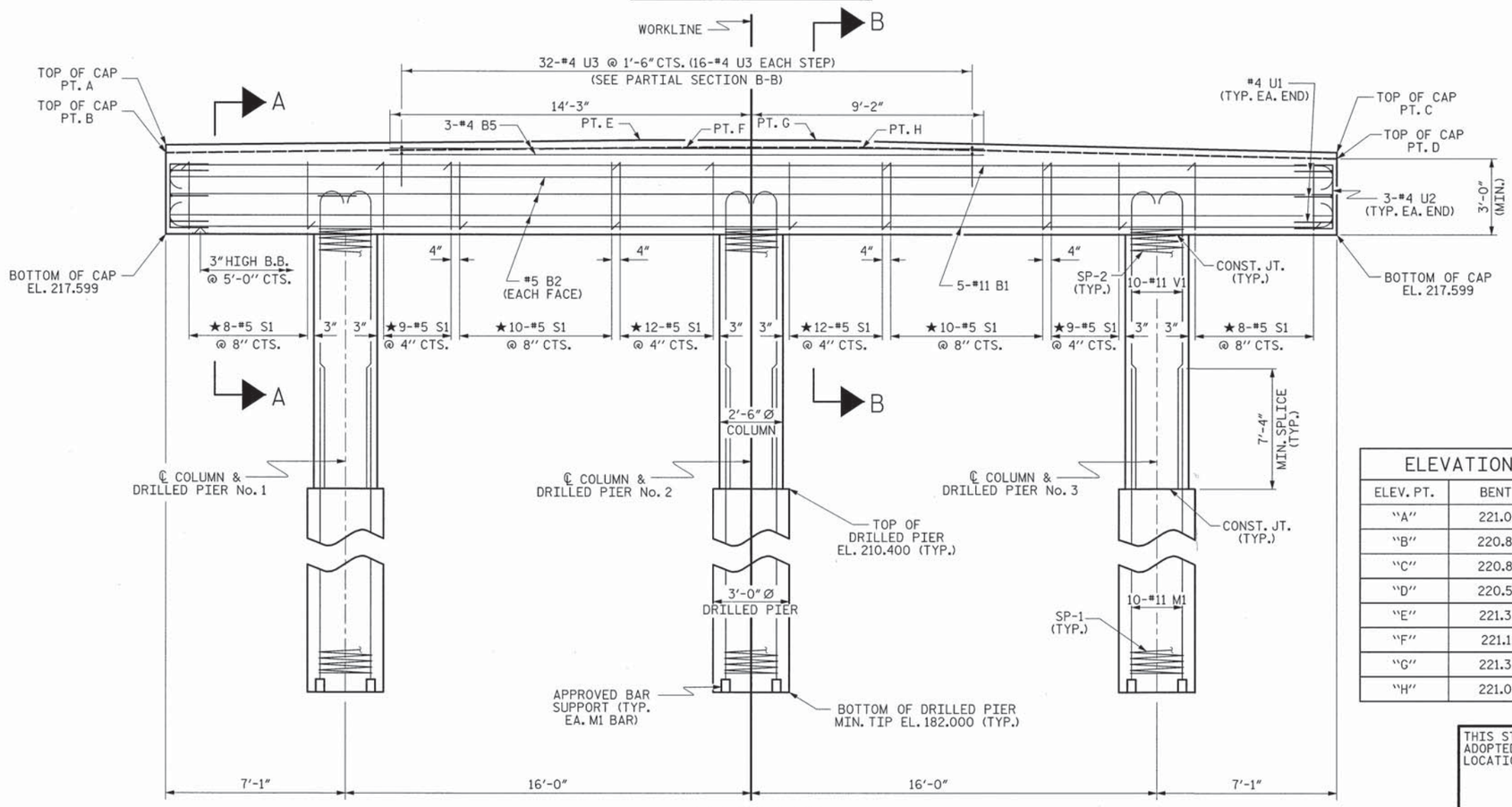

ELEVATION

DIMENSIONS & REINFORCING STEEL ARE TYPICAL FOR EACH COLUMN & DRILLED PIER UNLESS OTHERWISE NOTED.

NOTES

STIRRUPS IN CAP MAY BE SHIFTED AS NECESSARY TO CLEAR DOWELS.

HOOKS ON "V" BARS MAY BE TURNED AS NECESSARY FOR PLACING REINFORCING STEEL.

FOR DRILLED PIERS, SEE SECTION 411 OF THE STANDARD SPECIFICATIONS.

ALL STEEL IN THE DRILLED PIERS IS INCLUDED IN THE PAY ITEMS FOR "REINFORCING STEEL" AND "SPIRAL COLUMN REINFORCING STEEL."

★ INVERT ALTERNATE STIRRUPS.

THE LOCATION OF THE CONSTRUCTION JOINT IN THE DRILLED PIERS IS BASED ON AN APPROXIMATE GROUND LINE ELEVATION. IF THE CONSTRUCTION JOINT IS ABOVE THE ACTUAL GROUND LINE ELEVATION, THE CONTRACTOR SHALL PLACE THE CONSTRUCTION JOINT ONE FOOT BELOW THE GROUND LINE.

THE CONTRACTOR'S ATTENTION IS CALLED TO THE FACT THAT THE LONGITUDINAL REINFORCEMENT FOR DRILLED PIERS IS DETAILED WITH 3 FEET OF EXTRA LENGTH.

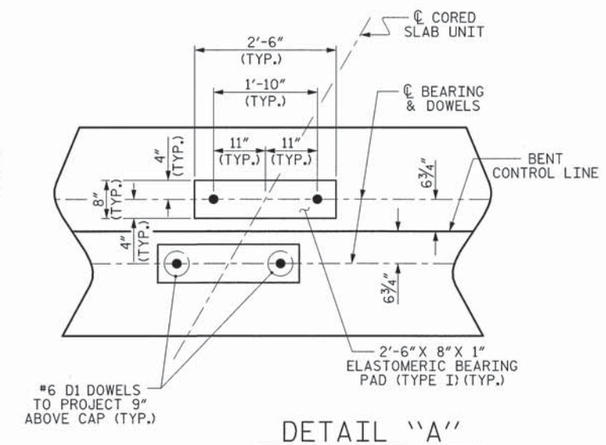

DETAIL "A"

(DIMENSIONS ARE TYPICAL EACH BEARING)

ELEVATION	
ELEV. PT.	BENT 1
"A"	221.082
"B"	220.803
"C"	220.847
"D"	220.599
"E"	221.382
"F"	221.114
"G"	221.347
"H"	221.078

PROJECT NO. 17BP.4.R.52

NASH COUNTY

STATION: 15+28.67 -L-

SHEET 1 OF 2

THIS STANDARD DRAWING REVIEWED & ADOPTED FOR USE AT THE REFERENCED LOCATION BY THE UNDERSIGNED:

NORTH CAROLINA PROFESSIONAL ENGINEER SEAL 19661 KEVIN AUSTIN

11/15/13

STATE OF NORTH CAROLINA
DEPARTMENT OF TRANSPORTATION
RALEIGH

SUBSTRUCTURE
BENT No. 1

PLANS PREPARED BY:

MULKEY ENGINEERS & CONSULTANTS
PO Box 33127 Raleigh, N.C. 27636
(919) 851-1912
(919) 851-1918 (FAX)
WWW.MULKEYINC.COM
NC LICENSE NO. C-1031

REVISIONS							SHEET NO.
NO.	BY:	DATE:	NO.	BY:	DATE:		26
1			3				TOTAL SHEETS
2			4				36

ASSEMBLED BY :	Z. H. BROWN	DATE : 7/29/13
CHECKED BY :	W. A. DAVIS	DATE : 10/9/13
DRAWN BY : DGE	04/10	
CHECKED BY : MKT	04/10	

11/14/2013 3:58:57 PM R:\Structures\Nash 32_SD_BL01.dgn

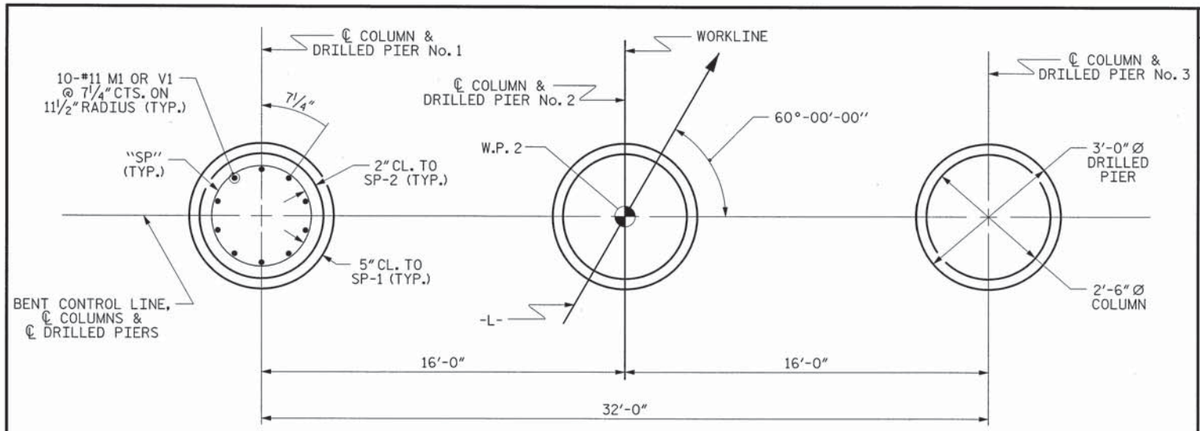

PLAN OF DRILLED PIERS & COLUMNS

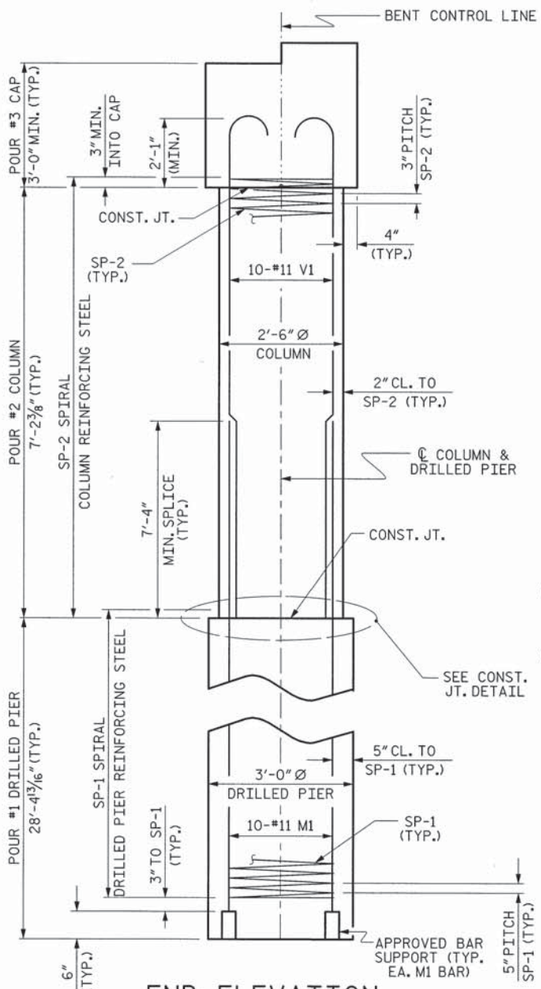

END ELEVATION

(LEFT END SHOWN)

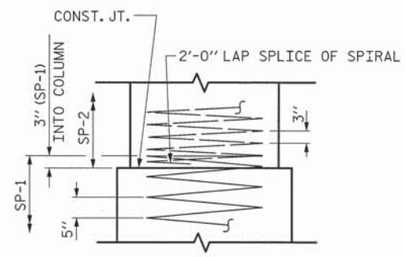

CONSTRUCTION JOINT DETAIL

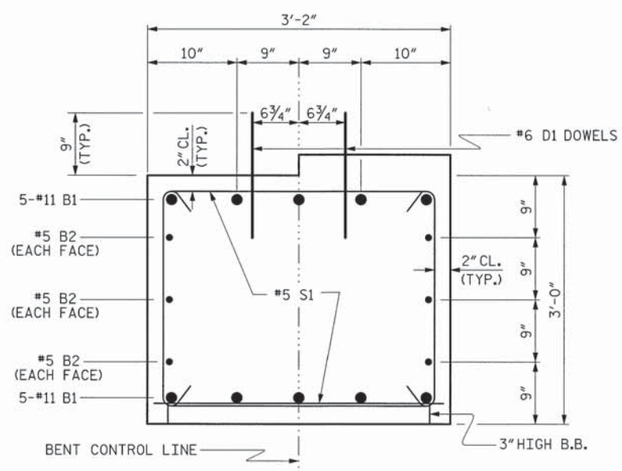

SECTION A-A

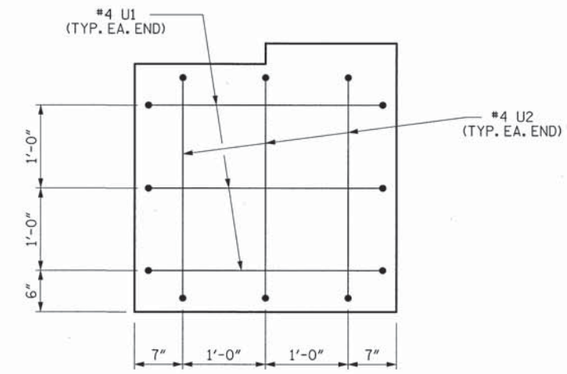

END OF CAP VIEW

(TYPICAL BOTH ENDS)

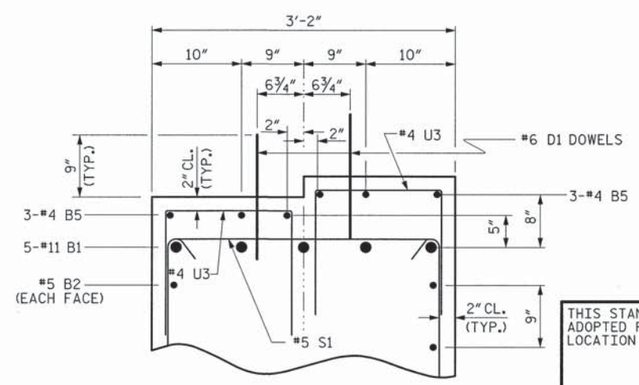

PARTIAL SECTION B-B

BAR TYPES

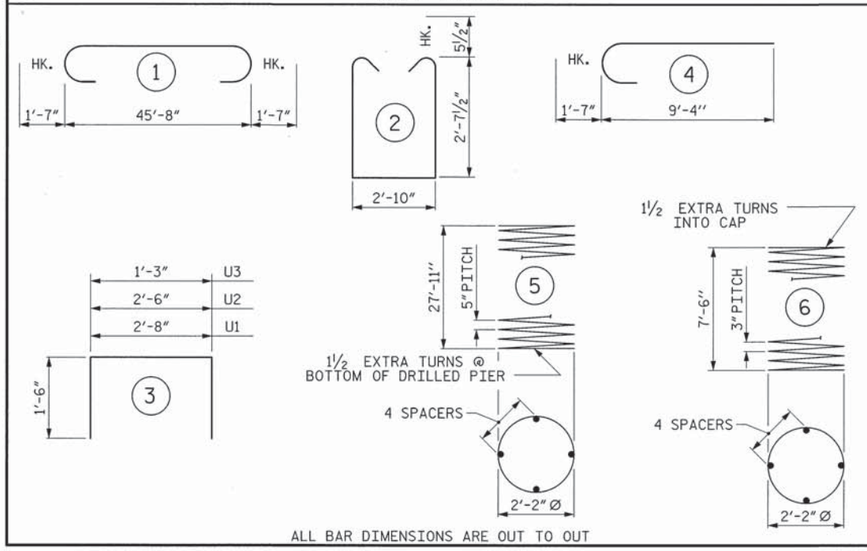

ALL BAR DIMENSIONS ARE OUT TO OUT

BILL OF MATERIAL
FOR ONE BENT

BAR	NO.	SIZE	TYPE	LENGTH	WEIGHT
B1	10	#11	1	48'-10"	2595
B2	6	#5	STR	45'-10"	287
B3	2	#4	STR	2'-10"	4
B4	2	#4	STR	3'-3"	4
B5	6	#4	STR	23'-5"	94
D1	48	#6	STR	1'-6"	108
M1	30	#11	STR	38'-3"	6097
S1	78	#5	2	9'-0"	732
U1	6	#4	3	5'-8"	23
U2	6	#4	3	5'-6"	22
U3	32	#4	3	4'-3"	91
V1	30	#11	4	10'-11"	1740
REINFORCING STEEL (FOR ONE BENT)					11797 LBS.
SP-1	3	*	5	466'-0"	1458
SP-2	3	**	6	220'-6"	442
SPIRAL COLUMN REINFORCING STEEL (FOR ONE BENT)					1900 LBS.

* THE SP-1 SPIRAL REINFORCING STEEL SHALL BE W31 OR D-31 COLD DRAWN WIRE OR #5 PLAIN OR DEFORMED BAR

** THE SP-2 SPIRAL REINFORCING STEEL SHALL BE W20 OR D-20 COLD DRAWN WIRE OR #4 PLAIN OR DEFORMED BAR

CLASS A CONCRETE BREAKDOWN (FOR ONE BENT)

POUR #2 (COLUMNS)	3.9 C.Y.
POUR #3 (CAP)	18.5 C.Y.
TOTAL CLASS A CONCRETE	22.4 C.Y.

DRILLED PIERS: (FOR ONE BENT)

DRILLED PIER CONCRETE POUR #1 (DRILLED PIERS)	22.3 C.Y.
3'-0"Ø DRILLED PIER NOT IN SOIL	30 LIN. FT.
3'-0"Ø DRILLED PIER IN SOIL	55.2 LIN. FT.
PERMANENT STEEL CASING FOR 3'-0"Ø DRILLED PIER	31.2 LIN. FT.
CSL TUBES	358.8 LIN. FT.

PROJECT NO. 17BP.4.R.52

NASH COUNTY

STATION: 15+28.67 -L-

SHEET 2 OF 2

STATE OF NORTH CAROLINA
DEPARTMENT OF TRANSPORTATION
RALEIGH

SUBSTRUCTURE

BENT No. 1

THIS STANDARD DRAWING REVIEWED & ADOPTED FOR USE AT THE REFERENCED LOCATION BY THE UNDERSIGNED:

NORTH CAROLINA PROFESSIONAL SEAL (1966) ENGINEER KEVIN AUSTIN 11/15/13

PLANS PREPARED BY:
MULKEY ENGINEERS & CONSULTANTS
PO Box 33127 Raleigh, N.C. 27636
(919) 851-1912
(919) 851-1918 (FAX)
WWW.MULKEYINC.COM
NC LICENSE NO. C-1021

REVISIONS						SHEET NO.
NO.	BY:	DATE:	NO.	BY:	DATE:	27
1			3			TOTAL SHEETS
2			4			36

ASSEMBLED BY : Z. H. BROWN DATE : 7/30/13
CHECKED BY : W. A. DAVIS DATE : 10/9/13
DRAWN BY : DGE 03/10
CHECKED BY : MKT 03/10

11/14/2013 3:57:32 PM R:\Structures\Nash 32_SD_BL02.dgn

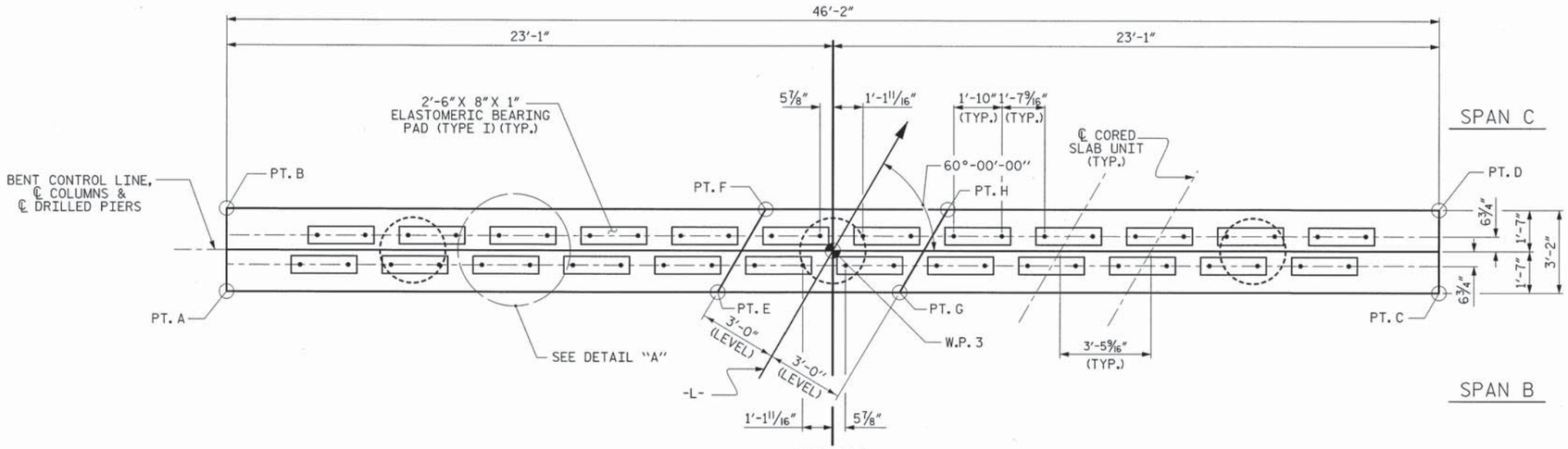

PLAN

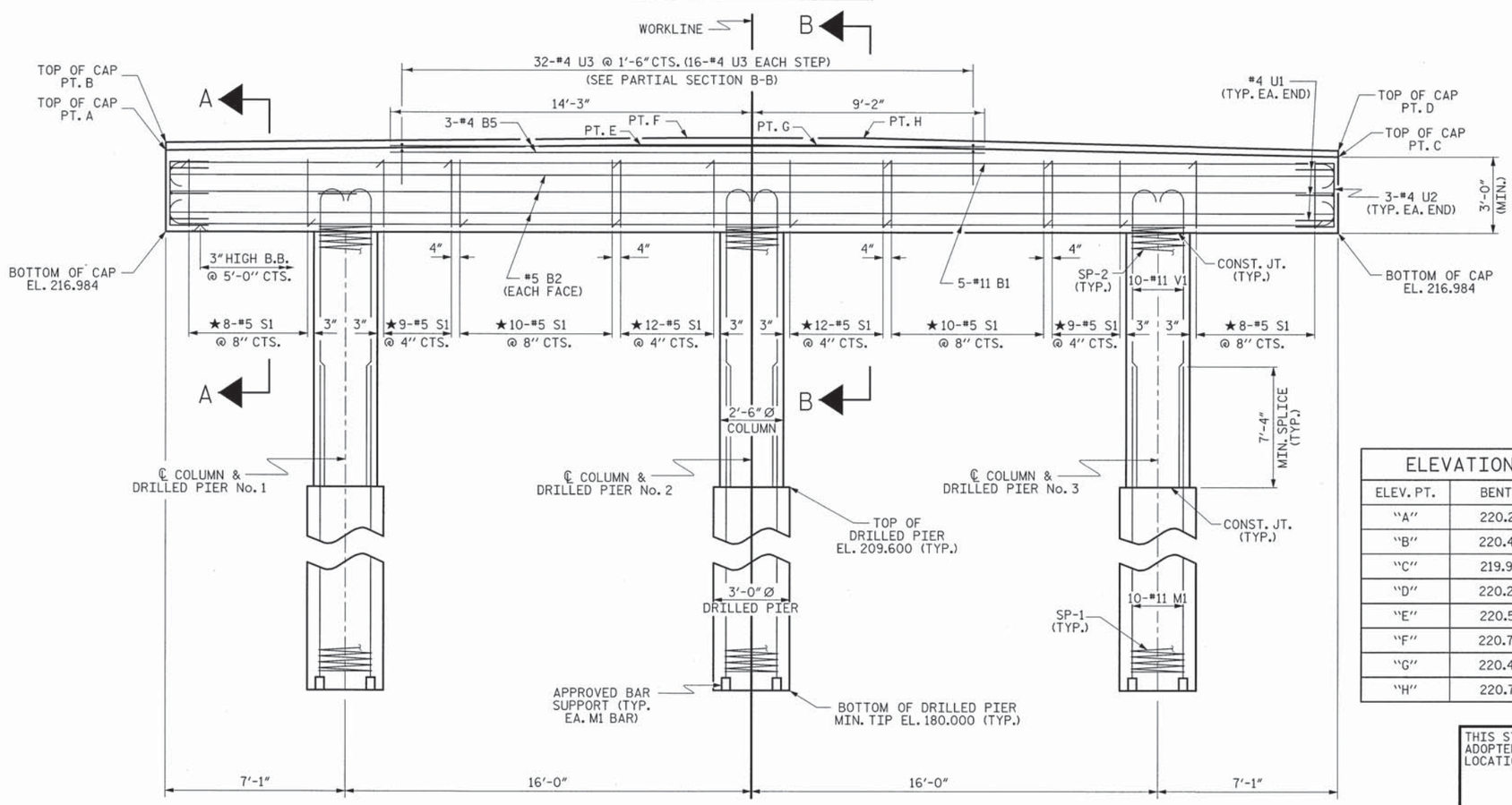

ELEVATION

DIMENSIONS & REINFORCING STEEL ARE TYPICAL FOR EACH COLUMN & DRILLED PIER UNLESS OTHERWISE NOTED.

NOTES

STIRRUPS IN CAP MAY BE SHIFTED AS NECESSARY TO CLEAR DOWELS.

HOOKS ON "V" BARS MAY BE TURNED AS NECESSARY FOR PLACING REINFORCING STEEL.

FOR DRILLED PIERS, SEE SECTION 411 OF THE STANDARD SPECIFICATIONS.

ALL STEEL IN THE DRILLED PIERS IS INCLUDED IN THE PAY ITEMS FOR "REINFORCING STEEL" AND "SPIRAL COLUMN REINFORCING STEEL."

★ INVERT ALTERNATE STIRRUPS.

DRILLED PIERS SHALL BE TERMINATED ONE FOOT ± ABOVE NORMAL WATER SURFACE ELEVATION FOR SHAFTS LOCATED IN WATER.

THE CONTRACTOR'S ATTENTION IS CALLED TO THE FACT THAT THE LONGITUDINAL REINFORCEMENT FOR DRILLED PIERS IS DETAILED WITH 3 FEET OF EXTRA LENGTH.

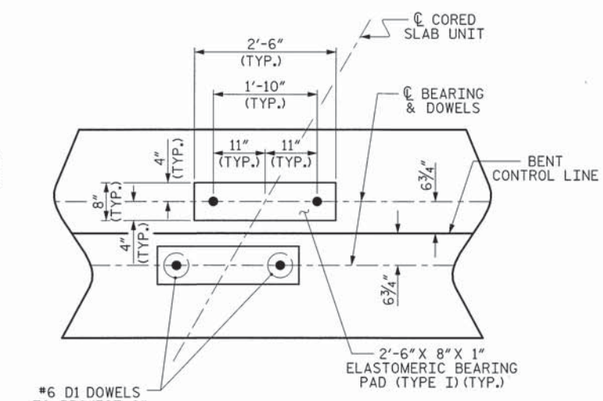

DETAIL "A"

(DIMENSIONS ARE TYPICAL EACH BEARING)

ELEVATION	
ELEV. PT.	BENT 2
"A"	220.219
"B"	220.439
"C"	219.984
"D"	220.235
"E"	220.519
"F"	220.750
"G"	220.483
"H"	220.715

PROJECT NO. 17BP.4.R.52

NASH COUNTY

STATION: 15+28.67 -L-

SHEET 1 OF 2

THIS STANDARD DRAWING REVIEWED & ADOPTED FOR USE AT THE REFERENCED LOCATION BY THE UNDERSIGNED:

NORTH CAROLINA PROFESSIONAL ENGINEER SEAL 19661 KEVIN AUSTIN 11/15/13

PLANS PREPARED BY:

MULKEY ENGINEERS & CONSULTANTS
PO Box 33127
Raleigh, N.C. 27636
(919) 851-1912
(919) 851-1918 (FAX)
WWW.MULKEYINC.COM
NC LICENSE NO. C-1021

STATE OF NORTH CAROLINA
DEPARTMENT OF TRANSPORTATION
RALEIGH

SUBSTRUCTURE
BENT No. 2

REVISIONS							
NO.	BY:	DATE:	NO.	BY:	DATE:	SHEET NO.	
1			3			28	
2			4			TOTAL SHEETS	
						36	

ASSEMBLED BY :	Z. H. BROWN	DATE :	7/29/13
CHECKED BY :	W. A. DAVIS	DATE :	10/9/13
DRAWN BY : DGE	04/10		
CHECKED BY : MKT	04/10		

11/14/2013 4:17:47 PM R:\Structures\Nash 32.50.82.0.dgn

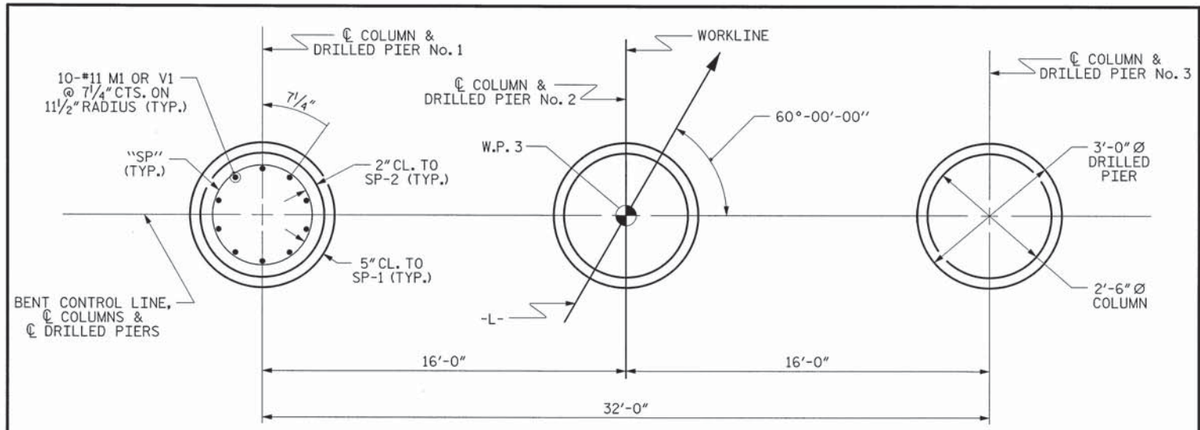

PLAN OF DRILLED PIERS & COLUMNS

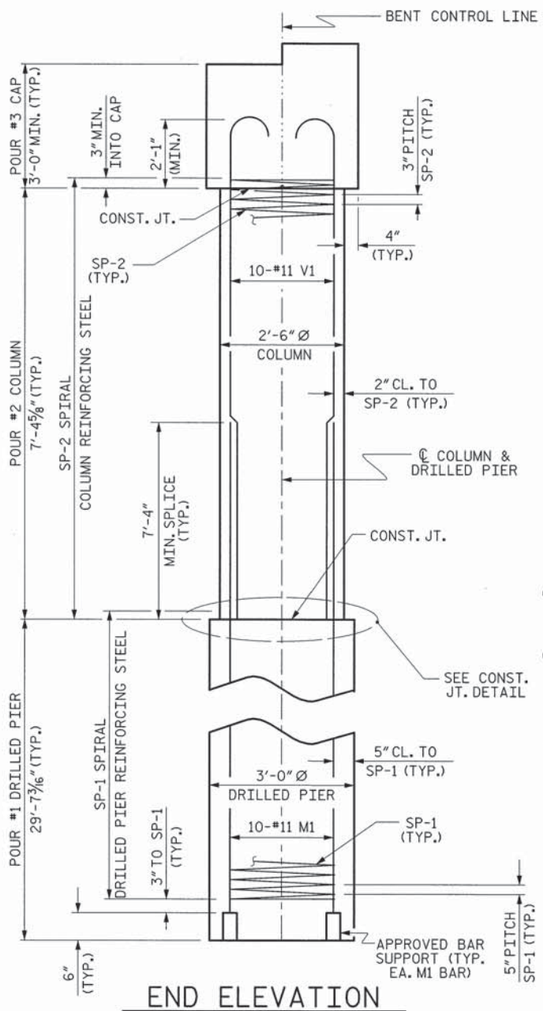

END ELEVATION

(RIGHT END SHOWN)

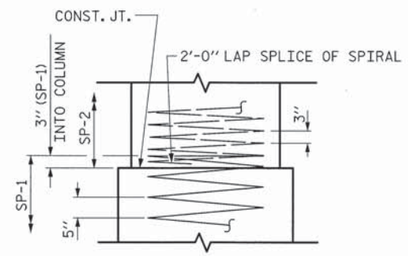

CONSTRUCTION JOINT DETAIL

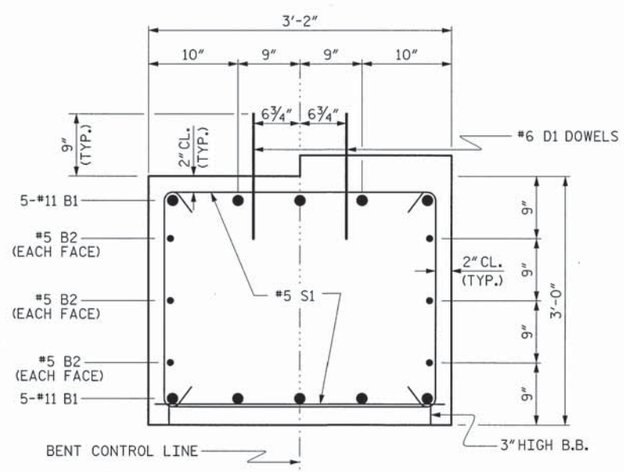

SECTION A-A

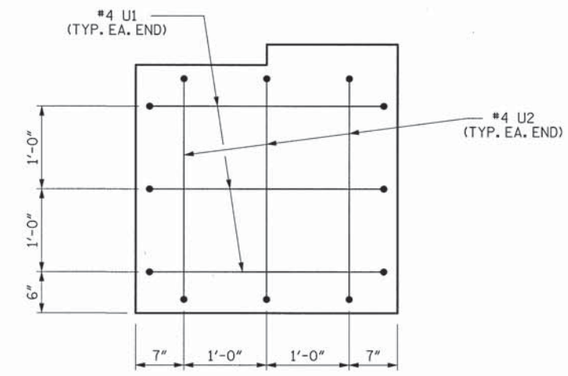

END OF CAP VIEW

(TYPICAL BOTH ENDS)

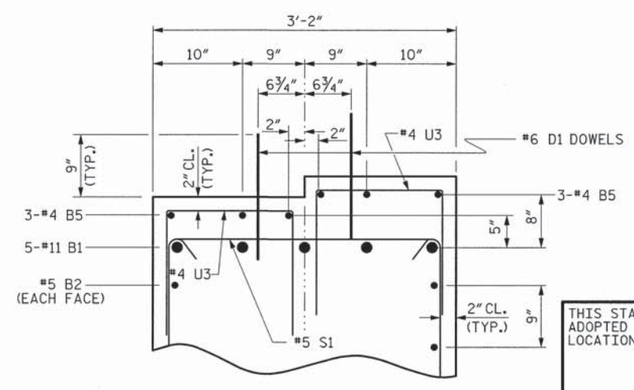

PARTIAL SECTION B-B

BAR TYPES

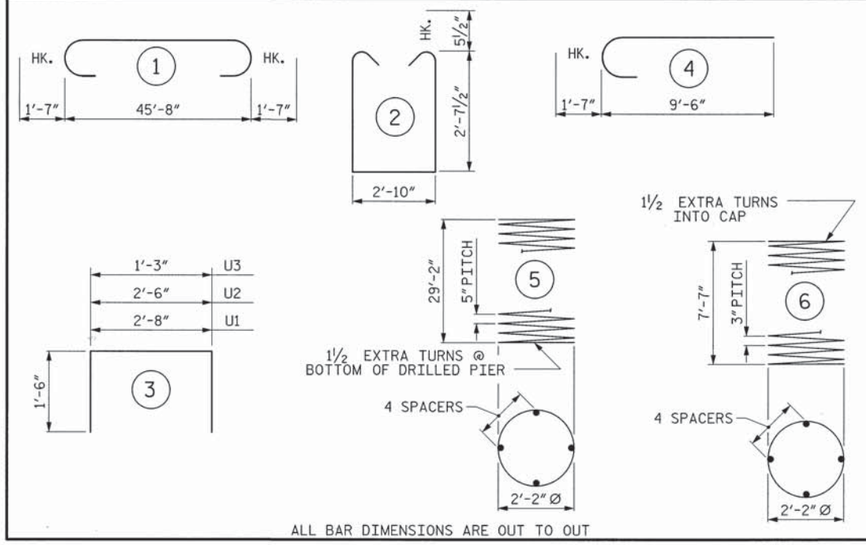

ALL BAR DIMENSIONS ARE OUT TO OUT

BILL OF MATERIAL FOR ONE BENT

BAR	NO.	SIZE	TYPE	LENGTH	WEIGHT
B1	10	#11	1	48'-10"	2595
B2	6	#5	STR	45'-10"	287
B3	2	#4	STR	2'-10"	4
B4	2	#4	STR	3'-3"	4
B5	6	#4	STR	23'-5"	94
D1	48	#6	STR	1'-6"	108
M1	30	#11	STR	39'-5"	6283
S1	78	#5	2	9'-0"	732
U1	6	#4	3	5'-8"	23
U2	6	#4	3	5'-6"	22
U3	32	#4	3	4'-3"	91
V1	30	#11	4	11'-1"	1767
REINFORCING STEEL (FOR ONE BENT)					12010 LBS.
SP-1	3	✳	5	485'-11"	1520
SP-2	3	✳✳	6	225'-6"	452
SPIRAL COLUMN REINFORCING STEEL (FOR ONE BENT)					1972 LBS.

✳ THE SP-1 SPIRAL REINFORCING STEEL SHALL BE W31 OR D-31 COLD DRAWN WIRE OR #5 PLAIN OR DEFORMED BAR

✳✳ THE SP-2 SPIRAL REINFORCING STEEL SHALL BE W20 OR D-20 COLD DRAWN WIRE OR #4 PLAIN OR DEFORMED BAR

CLASS A CONCRETE BREAKDOWN (FOR ONE BENT)

POUR #2 (COLUMNS)	4.0 C.Y.
POUR #3 (CAP)	18.5 C.Y.
TOTAL CLASS A CONCRETE	22.5 C.Y.

DRILLED PIERS: (FOR ONE BENT)

DRILLED PIER CONCRETE POUR #1 (DRILLED PIERS)	23.2 C.Y.
3'-0"Ø DRILLED PIER NOT IN SOIL	36 LIN. FT.
3'-0"Ø DRILLED PIER IN SOIL	52.8 LIN. FT.
PERMANENT STEEL CASING FOR 3'-0"Ø DRILLED PIER	40.8 LIN. FT.
CSL TUBES	373.2 LIN. FT.

PROJECT NO. 17BP.4.R.52

NASH COUNTY

STATION: 15+28.67 -L-

SHEET 2 OF 2

STATE OF NORTH CAROLINA
DEPARTMENT OF TRANSPORTATION
RALEIGH

SUBSTRUCTURE

BENT No. 2

ASSEMBLED BY :	Z. H. BROWN DATE : 7/30/13
CHECKED BY :	W. A. DAVIS DATE : 10/9/13
DRAWN BY : DGE	03/10
CHECKED BY : MKT	03/10

PLANS PREPARED BY:
MULKEY ENGINEERS & CONSULTANTS
PO Box 33127 RALEIGH, N.C. 27636
(919) 851-1912
(919) 851-1918 (FAX)
WWW.MULKEYINC.COM
NC LICENSE NO. C-1021

THIS STANDARD DRAWING REVIEWED & ADOPTED FOR USE AT THE REFERENCED LOCATION BY THE UNDERSIGNED:

NORTH CAROLINA PROFESSIONAL SEAL 19661 ENGINEER KEVIN AUSTIN 11/15/13

REVISIONS						
NO.	BY:	DATE:	NO.	BY:	DATE:	
1			3			
2			4			

SHEET NO. 29

TOTAL SHEETS 36

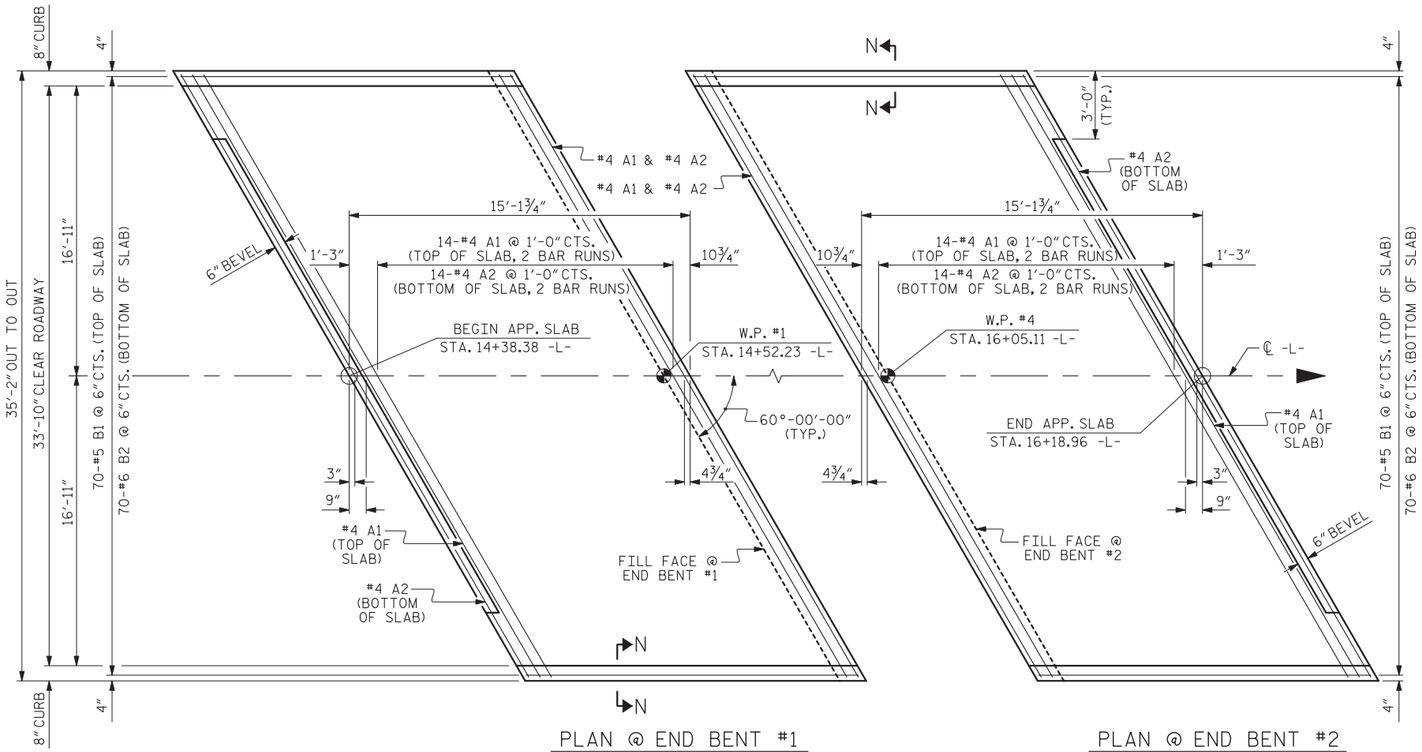

PLAN @ END BENT #1

PLAN @ END BENT #2

DIMENSIONS SHOWN ARE TYPICAL FOR BOTH APPROACH SLABS

NOTES

FOR REINFORCED BRIDGE APPROACH FILL INCLUDING GEOTEXTILE, IMPERMEABLE GEOMEMBRANE, 4" Ø DRAINAGE PIPE, #78M STONE, AND SELECT MATERIAL, SEE ROADWAY PLANS.

AREA BETWEEN THE WINGWALL AND APPROACH SLAB SHALL BE GRADED TO DRAIN THE WATER AWAY FROM THE FILL FACE OF THE BRIDGE AND SHALL BE PAVED. SEE ROADWAY PLANS.

APPROACH SLAB GROOVING IS REQUIRED. FOR QUANTITY SEE "CONCRETE WEARING SURFACE" SHEET.

BILL OF MATERIAL

APPROACH SLAB AT EB #1

BAR	NO.	SIZE	TYPE	LENGTH	WEIGHT
* A1	34	#4	STR	21'-1"	479
A2	34	#4	STR	21'-0"	477
* B1	70	#5	STR	14'-2"	1034
B2	70	#6	STR	14'-8"	1542
REINFORCING STEEL				LBS.	2019
* EPOXY COATED REINFORCING STEEL				LBS.	1513
CLASS AA CONCRETE				C. Y.	20.8

APPROACH SLAB AT EB #2

BAR	NO.	SIZE	TYPE	LENGTH	WEIGHT
* A1	34	#4	STR	21'-1"	479
A2	34	#4	STR	21'-0"	477
* B1	70	#5	STR	14'-2"	1034
B2	70	#6	STR	14'-8"	1542
REINFORCING STEEL				LBS.	2019
* EPOXY COATED REINFORCING STEEL				LBS.	1513
CLASS AA CONCRETE				C. Y.	20.8

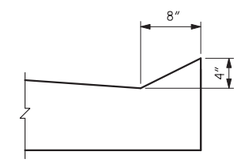

SECTION N-N

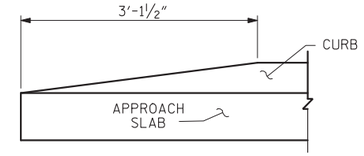

END OF CURB WITHOUT SHOULDER BERM GUTTER

CURB DETAILS

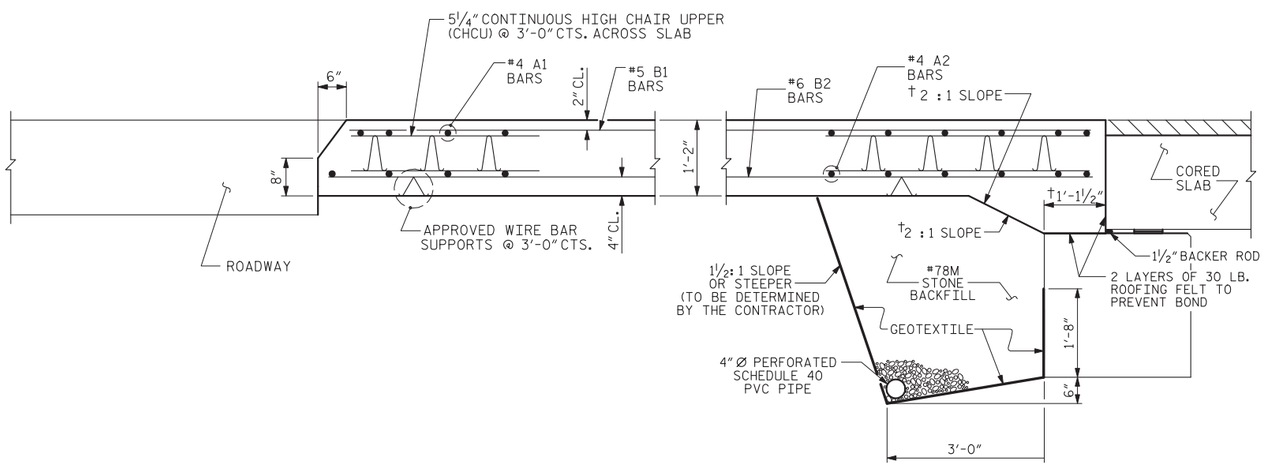

† NORMAL TO END BENT

SECTION THRU SLAB

PROJECT NO. 17BP.4.R.52

NASH COUNTY

STATION: 15+28.67 -L-

SHEET 1 OF 2

STATE OF NORTH CAROLINA
DEPARTMENT OF TRANSPORTATION
RALEIGH

STANDARD

BRIDGE APPROACH SLAB FOR PRESTRESSED CONCRETE CORED SLAB

THIS STANDARD DRAWING REVIEWED & ADOPTED FOR USE AT THE REFERENCED LOCATION BY THE UNDERSIGNED:

NORTH CAROLINA PROFESSIONAL SEAL ENGINEER 19661 L. KEVIN AUSTIN 12/3/14

PLANS PREPARED BY:

MULKEY ENGINEERS & CONSULTANTS
PO Box 33127
RALEIGH, N.C. 27636
(919) 851-1912
(919) 851-1918 (FAX)
WWW.MULKEYINC.COM
NO LICENSE NO. C-1231

REVISIONS						SHEET NO.
NO.	BY:	DATE:	NO.	BY:	DATE:	30
1			3			TOTAL SHEETS
2			4			36

STD. NO. BAS3 (SHT 1a)

ASSEMBLED BY : Z. H. BROWN	DATE : 8/1/13		
CHECKED BY : W. A. DAVIS	DATE : 8/20/13		
DRAWN BY : FCJ 6/87	REV. 10/1/11	MAA/GM	
CHECKED BY : EGA 6/87	REV. 12/21/11	MAA/GM	
	REV. 6/13	MAA/GM	

12/4/2014 10:42:AM R:\Structures\Nash 32_SD_AS_01.dgn

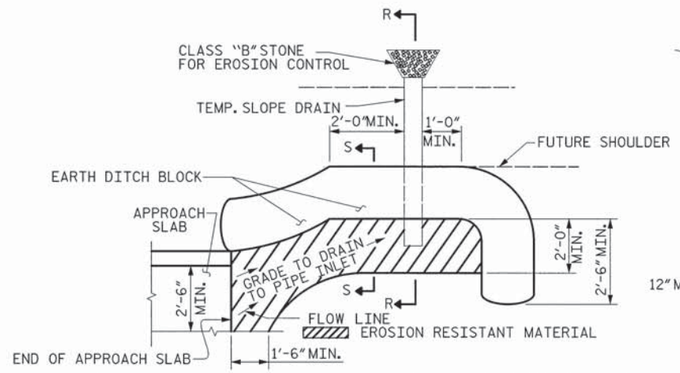

NOTE: IMMEDIATELY AFTER THE CONSTRUCTION OF THE APPROACH SLAB, THE CONTRACTOR SHALL PROVIDE TEMPORARY BERM AND SLOPE DRAIN. CONTRACTOR SHALL GRADE TO PIPE INLET AND PROVIDE EROSION RESISTANT MATERIAL AS SHOWN. THE EROSION RESISTANT MATERIAL SHALL BE EITHER 1) ASPHALT PLANT MIX, TYPE 1 OR TYPE 2, MIN. 2" DEPTH, 2) EROSION CONTROL MAT, OR 3) CONCRETE, AS DIRECTED BY THE ENGINEER. THE SLOPE DRAIN SHALL CONSIST OF A NON-PERFORATED TEMPORARY DRAINAGE PIPE, 12 INCHES IN DIAMETER.

PLAN VIEW

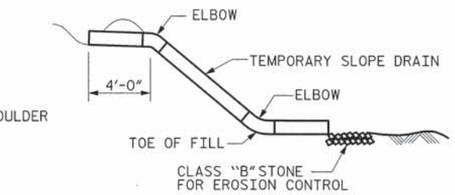

SECTION R-R

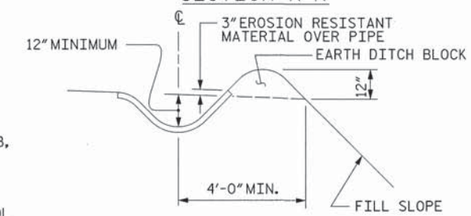

SECTION S-S

TEMPORARY BERM AND SLOPE DRAIN DETAILS

(TO BE USED WHEN SHOULDER BERM GUTTER IS REQUIRED)

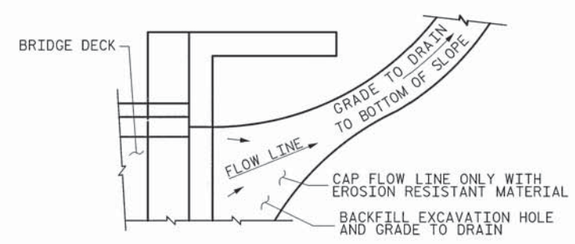

NOTE: IF THE APPROACH SLAB IS NOT CONSTRUCTED IMMEDIATELY AFTER THE BACKFILLING OF THE END BENT EXCAVATION, GRADE TO DRAIN TO THE BOTTOM OF THE SLOPE AND PROVIDE EROSION RESISTANT MATERIAL, SUCH AS FIBERGLASS ROVING OR AS DIRECTED BY THE ENGINEER TO PREVENT SOIL EROSION AND TO PROTECT THE AREA ADJACENT TO THE STRUCTURE. THE CONTRACTOR WILL BE REQUIRED TO REMOVE THESE MATERIALS PRIOR TO CONSTRUCTION OF THE APPROACH SLAB.

TEMPORARY DRAINAGE DETAIL

PROJECT NO. 17BP.4.R.52

NASH COUNTY

STATION: 15+28.67 -L-

SHEET 2 OF 2

STATE OF NORTH CAROLINA
DEPARTMENT OF TRANSPORTATION
RALEIGH

STANDARD

BRIDGE APPROACH SLAB DETAILS

THIS STANDARD DRAWING REVIEWED & ADOPTED FOR USE AT THE REFERENCED LOCATION BY THE UNDERSIGNED:

NORTH CAROLINA PROFESSIONAL ENGINEER SEAL 19661 KEVIN AUSTIN 11/15/13

PLANS PREPARED BY:
MULKEY ENGINEERS & CONSULTANTS
PO BOX 33127
RALEIGH, N.C. 27636
(919) 851-1912
(919) 851-1918 (FAX)
WWW.MULKEYINC.COM
NC LICENSE NO. C-1021

REVISIONS						SHEET NO.
NO.	BY:	DATE:	NO.	BY:	DATE:	31
1			3			TOTAL SHEETS
2			4			36

STD. NO. BAS4

ASSEMBLED BY : Z. H. BROWN		DATE : 8/1/13	
CHECKED BY : W. A. DAVIS		DATE : 8/20/13	
DRAWN BY : FCJ	11/88	REV. 10/1/11	MAA/GM
CHECKED BY : ARB	11/88	REV. 7/12	MAA/GM
		REV. 6/13	MAA/GM

11/14/2013 3:06:17 PM R:\Structures\Nash 32-50_AS_02.dgn

STANDARD NOTES

DESIGN DATA:

SPECIFICATIONS	A.A.S.H.T.O. (CURRENT)
LIVE LOAD	SEE PLANS
IMPACT ALLOWANCE	SEE A.A.S.H.T.O.
STRESS IN EXTREME FIBER OF	
STRUCTURAL STEEL - AASHTO M270 GRADE 36	20,000 LBS. PER SQ. IN.
- AASHTO M270 GRADE 50W	27,000 LBS. PER SQ. IN.
- AASHTO M270 GRADE 50	27,000 LBS. PER SQ. IN.
REINFORCING STEEL IN TENSION	
GRADE 60	24,000 LBS. PER SQ. IN.
CONCRETE IN COMPRESSION	1,200 LBS. PER SQ. IN.
CONCRETE IN SHEAR	SEE A.A.S.H.T.O.
STRUCTURAL TIMBER - TREATED OR	
UNTREATED - EXTREME FIBER STRESS	1,800 LBS. PER SQ. IN.
COMPRESSION PERPENDICULAR TO GRAIN OF TIMBER	375 LBS. PER SQ. IN.
EQUIVALENT FLUID PRESSURE OF EARTH	30 LBS. PER CU. FT. (MINIMUM)

MATERIAL AND WORKMANSHIP:

EXCEPT AS MAY OTHERWISE BE SPECIFIED ON PLANS OR IN THE SPECIAL PROVISIONS, ALL MATERIAL AND WORKMANSHIP SHALL BE IN ACCORDANCE WITH THE 2012 "STANDARD SPECIFICATIONS FOR ROADS AND STRUCTURES" OF THE N. C. DEPARTMENT OF TRANSPORTATION.

STEEL SHEET PILING FOR PERMANENT OR TEMPORARY APPLICATIONS SHALL BE HOT ROLLED.

CONCRETE:

UNLESS OTHERWISE REQUIRED ON PLANS, CLASS A CONCRETE SHALL BE USED FOR ALL PORTIONS OF ALL STRUCTURES WITH THE EXCEPTION THAT: CLASS AA CONCRETE SHALL BE USED IN BRIDGE SUPERSTRUCTURES, ABUTMENT BACKWALLS, AND APPROACH SLABS; AND CLASS B CONCRETE SHALL BE USED FOR SLOPE PROTECTION AND RIP RAP.

CONCRETE CHAMFERS:

UNLESS OTHERWISE NOTED ON THE PLANS, ALL EXPOSED CORNERS ON STRUCTURES SHALL BE CHAMFERED 3/4" WITH THE FOLLOWING EXCEPTIONS: TOP CORNERS OF CURBS MAY BE ROUNDED TO 1-1/2" RADIUS WHICH IS BUILT INTO CURB FORMS; CORNERS OF TRANSVERSE FLOOR EXPANSION JOINTS SHALL BE ROUNDED WITH A 1/4" FINISHING TOOL UNLESS OTHERWISE REQUIRED ON PLANS; AND CORNERS OF EXPANSION JOINTS IN THE ROADWAY FACES AND TOPS OF CURBS AND SIDEWALKS SHALL BE ROUNDED TO A 1/4" RADIUS WITH A FINISHING STONE OR TOOL UNLESS OTHERWISE REQUIRED ON PLANS.

DOWELS:

DOWELS WHEN INDICATED ON PLANS AS FOR CULVERT EXTENSIONS, SHALL BE EMBEDDED AT LEAST 12" INTO THE OLD CONCRETE AND GROUTED INTO PLACE WITH 1:2 CEMENT MORTAR.

ALLOWANCE FOR DEAD LOAD DEFLECTION, SETTLEMENT, ETC. IN CASTING SUPERSTRUCTURES:

BRIDGES SHALL BE BUILT ON THE GRADE OR VERTICAL CURVE SHOWN ON PLANS. SLABS, CURBS AND PARAPETS SHALL CONFORM TO THE GRADE OR CURVE.

ALL DIMENSIONS WHICH ARE GIVEN IN SECTION AND ARE AFFECTED BY DEAD LOAD DEFLECTIONS ARE DIMENSIONS AT CENTER LINE OF BEARING UNLESS OTHERWISE NOTED ON PLANS. IN SETTING FORMS FOR STEEL BEAM BRIDGES AND PRESTRESSED CONCRETE GIRDER BRIDGES, ADJUSTMENTS SHALL BE MADE DUE TO THE DEAD LOAD DEFLECTIONS FOR THE ELEVATIONS SHOWN. WHERE BLOCKS ARE SHOWN OVER BEAMS FOR BUILDING UP TO THE SLAB, THE VERTICAL DIMENSIONS OF THE BLOCKS SHALL BE ADJUSTED BETWEEN BEARINGS TO COMPENSATE FOR DEAD LOAD DEFLECTIONS, VERTICAL CURVE ORDINATE, AND ACTUAL BEAM CAMBER. WHERE BOTTOM OF SLAB IS IN LINE WITH BOTTOM OF TOP FLANGES, DEPTH OF SLAB BETWEEN BEARINGS SHALL BE ADJUSTED TO COMPENSATE FOR DEAD LOAD DEFLECTION, VERTICAL CURVE ORDINATE, AND ACTUAL BEAM CAMBER.

IN SETTING FALSEWORK AND FORMS FOR REINFORCED CONCRETE SPANS, AN ALLOWANCE SHALL BE MADE FOR DEAD LOAD DEFLECTIONS, SETTLEMENT OF FALSEWORK, AND PERMANENT CAMBER WHICH SHALL BE PROVIDED FOR IN ADDITION TO THE ELEVATIONS SHOWN. AFTER REMOVAL OF THE FALSEWORK, THE FINISHED STRUCTURES SHALL CONFORM TO THE PROFILE AND ELEVATIONS SHOWN ON THE PLANS AND CONSTRUCTION ELEVATIONS FURNISHED BY THE ENGINEER.

DETAILED DRAWINGS FOR FALSEWORK OR FORMS FOR BRIDGE SUPERSTRUCTURE AND ANY STRUCTURE OR PARTS OF A STRUCTURE AS NOTED ON THE PLANS SHALL BE SUBMITTED TO THE ENGINEER FOR APPROVAL BEFORE CONSTRUCTION OF THE FALSEWORK OR FORMS IS STARTED.

REINFORCING STEEL:

ALL REINFORCING STEEL SHALL BE DEFORMED. DIMENSIONS RELATIVE TO PLACEMENT OF REINFORCING ARE TO CENTERS OF BARS UNLESS OTHERWISE INDICATED IN THE PLANS. DIMENSIONS ON BAR DETAILS ARE TO CENTERS OF BARS OR ARE OUT TO OUT AS INDICATED ON PLANS.

WIRE BAR SUPPORTS SHALL BE PROVIDED FOR REINFORCING STEEL WHERE INDICATED ON THE PLANS. WHEN BAR SUPPORT PIECES ARE PLACED IN CONTINUOUS LINES, THEY SHALL BE SO PLACED THAT THE ENDS OF THE SUPPORTING WIRES SHALL BE LAPPED TO LOCK LEGS ON ADJOINING PIECES.

STRUCTURAL STEEL:

AT THE CONTRACTOR'S OPTION, HE MAY SUBSTITUTE 7/8" Ø SHEAR STUDS FOR THE 3/4" Ø STUDS SPECIFIED ON THE PLANS. THIS SUBSTITUTION SHALL BE MADE AT THE RATE OF 3 - 7/8" Ø STUDS FOR 4 - 3/4" Ø STUDS, AND STUD SPACING CHANGES SHALL BE MADE AS NECESSARY TO PROVIDE THE SAME EQUIVALENT NUMBER OF 7/8" Ø STUDS ALONG THE BEAM AS SHOWN FOR 3/4" Ø STUDS BASED ON THE RATIO OF 3 - 7/8" Ø STUDS FOR 4 - 3/4" Ø STUDS. STUDS OF THE LENGTH SPECIFIED ON THE PLANS MUST BE PROVIDED. THE MAXIMUM SPACING SHALL BE 2'-0".

EXCEPT AT THE INTERIOR SUPPORTS OF CONTINUOUS BEAMS WHERE THE COVER PLATE IS IN CONTACT WITH BEARING PLATE, THE CONTRACTOR MAY, AT HIS OPTION, SUBSTITUTE FOR THE COVER PLATES DESIGNATED ON THE PLANS COVER PLATES OF THE EQUIVALENT AREA PROVIDED THESE PLATES ARE AT LEAST 5/16" IN THICKNESS AND DO NOT EXCEED A WIDTH EQUAL TO THE FLANGE WIDTH LESS 2" OR A THICKNESS EQUAL TO 2 TIMES THE FLANGE THICKNESS. THE SIZE OF FILLET WELDS SHALL CONFORM TO THE REQUIREMENTS OF THE CURRENT ANSI/AASHTO/AWS "BRIDGE WELDING CODE". ELECTROSLAG WELDING WILL NOT BE PERMITTED.

WITH THE SOLE EXCEPTION OF EDGES AT SURFACES WHICH BEAR ON OTHER SURFACES, ALL SHARP EDGES AND ENDS OF SHAPES AND PLATES SHALL BE SLIGHTLY ROUNDED BY SUITABLE MEANS TO A RADIUS OF APPROXIMATELY 1/16 INCH OR EQUIVALENT FLAT SURFACE AT A SUITABLE ANGLE PRIOR TO PAINTING, GALVANIZING, OR METALLIZING.

HANDRAILS AND POSTS:

METAL STANDARDS AND FACES OF THE CONCRETE END POSTS FOR THE METAL RAIL SHALL BE SET NORMAL TO THE GRADE OF THE CURB, UNLESS OTHERWISE SHOWN ON PLANS. THE METAL RAIL AND TOPS OF CONCRETE POSTS USED WITH THE ALUMINUM RAIL SHALL BE BUILT PARALLEL TO THE GRADE OF THE CURB.

METAL HANDRAILS SHALL BE IN ACCORDANCE WITH THE PLANS. RAILS SHALL BE AS MANUFACTURED FOR BRIDGE RAILING. CASTINGS SHALL BE OF A UNIFORM APPEARANCE. FINS AND OTHER DEFORMATIONS RESULTING FROM CASTING OR OTHERWISE SHALL BE REMOVED IN A MANNER SO THAT A UNIFORM COLORING OF THE COMPLETED CASTING SHALL BE OBTAINED. CASTINGS WITH DISCOLORATIONS OR OF NON-UNIFORM COLORING WILL NOT BE ACCEPTED. CERTIFIED MILL REPORTS ARE REQUIRED FOR METAL RAILS AND POSTS.

SPECIAL NOTES:

GENERALLY, IN CASE OF DISCREPANCY, THIS STANDARD SHEET OF NOTES SHALL GOVERN OVER THE SPECIFICATIONS, BUT THE REMAINDER OF THE PLANS SHALL GOVERN OVER NOTES HEREON, AND SPECIAL PROVISIONS SHALL GOVERN OVER ALL. SEE SPECIFICATIONS ARTICLE 105-4.

ENGLISH
JANUARY, 1990

SHEET NO. 32
TOTAL SHEETS 36

STD. NO. SN

EROSION CONTROL PLAN

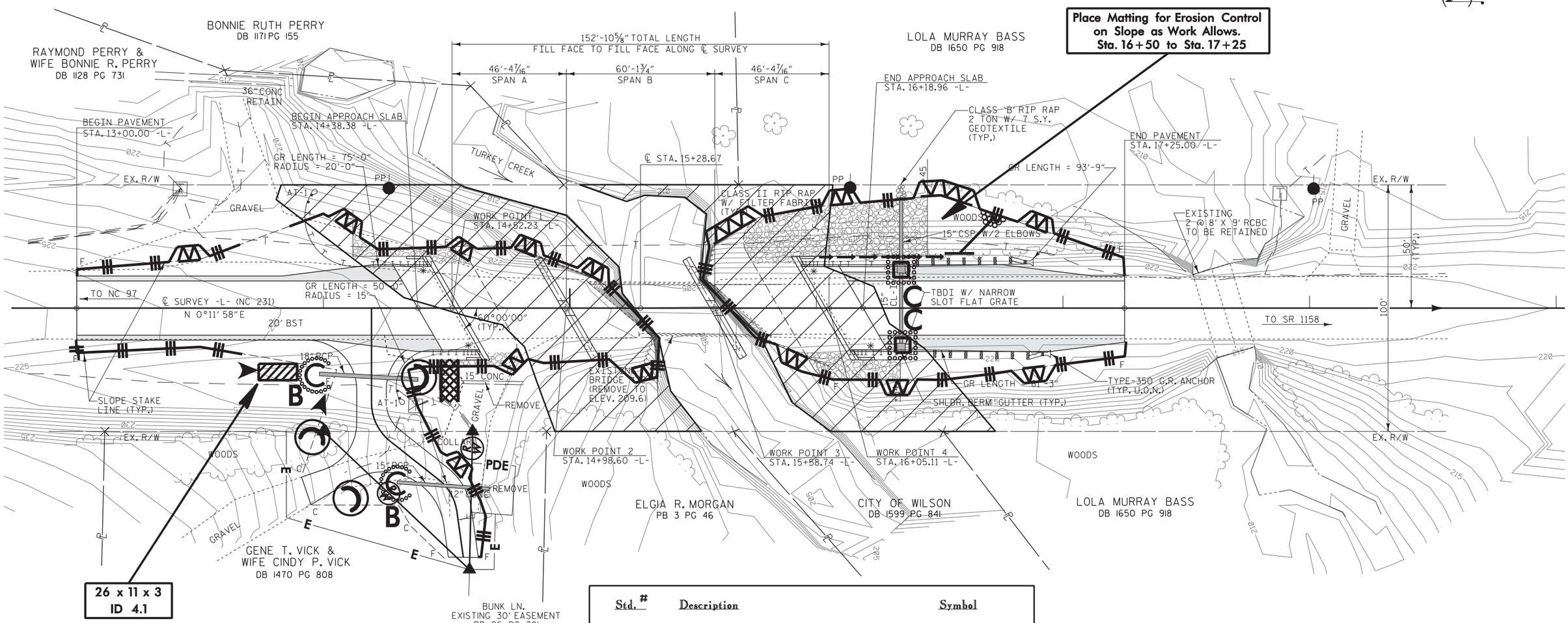

Std. #	Description	Symbol
1605.01	Temporary Silt Fence	
1606.01	Special Sediment Control Fence	
1622.01	Temporary Berms and Slope Drains	
1630.02	Silt Basin Type B	
1630.03	Temporary Silt Ditch	TSD
1630.06	Special Stilling Basin	
1632.03	Rock Inlet Sediment Trap Type C	
1633.01	Temporary Rock Silt Check Type-A	
1633.02	Temporary Rock Silt Check Type-B	
	Wattle with Polyacrylamide (PAM)	
1635.02	Rock Pipe Inlet Sediment Trap Type-B	

ENVIRONMENTALLY SENSITIVE AREA
SEE PROJECT SPECIAL PROVISIONS

THESE EROSION AND SEDIMENT CONTROL PLANS COMPLY WITH THE REGULATIONS SET FORTH BY THE NCG-010000 GENERAL CONSTRUCTION PERMIT EFFECTIVE AUGUST 3, 2011 ISSUED BY THE NORTH CAROLINA DEPARTMENT OF ENVIRONMENT AND NATURAL RESOURCES DIVISION OF WATER QUALITY.

2012 STANDARD DRAWINGS

1604.01	Railroad Erosion Control Detail	1632.01	Rock Inlet Sediment Trap Type A
1605.01	Temporary Silt Fence	1632.02	Rock Inlet Sediment Trap Type B
1606.01	Special Sediment Control Fence	1632.03	Rock Inlet Sediment Trap Type C
1607.01	Gravel Construction Entrance	1633.01	Temporary Rock Silt Check Type A
1622.01	Temporary Berms and Slope Drains	1633.02	Temporary Rock Silt Check Type B
1630.01	Riser Basin	1634.01	Temporary Rock Sediment Dam Type A
1630.02	Silt Basin Type B	1634.02	Temporary Rock Sediment Dam Type B
1630.03	Temporary Silt Ditch	1635.01	Rock Pipe Inlet Sediment Trap Type A
1630.04	Stilling Basin	1635.02	Rock Pipe Inlet Sediment Trap Type B
1630.05	Temporary Diversion	1640.01	Coir Fiber Baffle
1630.06	Special Stilling Basin	1645.01	Temporary Stream Crossing
1631.01	Matting Installation		

NOTE: UTILIZE SPECIAL STILLING BASIN WHERE APPLICABLE.

NOTES: ANY DEVIATION FROM OPTIONS GIVEN WILL REQUIRE PRIOR APPROVAL BY ENGINEER.

ADDITIONAL EROSION CONTROL DEVICES MAY NEED TO BE INSTALLED AS DIRECTED BY THE ENGINEER.

ROADSIDE ENVIRONMENTAL UNIT
DEPARTMENT OF TRANSPORTATION
DIVISION OF HIGHWAYS
RALEIGH, N.C.

2012 STANDARD SPECIFICATIONS

PROJECT NO. 17BP.4.R.52
NASH COUNTY
STATION: 15+28.67 -L-

REPLACES BRIDGE NO. 32

STATE OF NORTH CAROLINA
DEPARTMENT OF TRANSPORTATION
RALEIGH

BRIDGE ON NC 231 OVER TURKEY CREEK BETWEEN NC 97 & SR 1158

33'-10" CLEAR ROADWAY - 60° SKEW

REVISIONS						SHEET NO.
NO.	BY:	DATE:	NO.	BY:	DATE:	33
1			3			TOTAL SHEETS
2			4			36

10/6/2004 1:57:59 PM R:\Structures\Erosion Control\Nash 32_SD_EC_01.dgn

WATTLE WITH POLYACRYLAMIDE (PAM) DETAIL

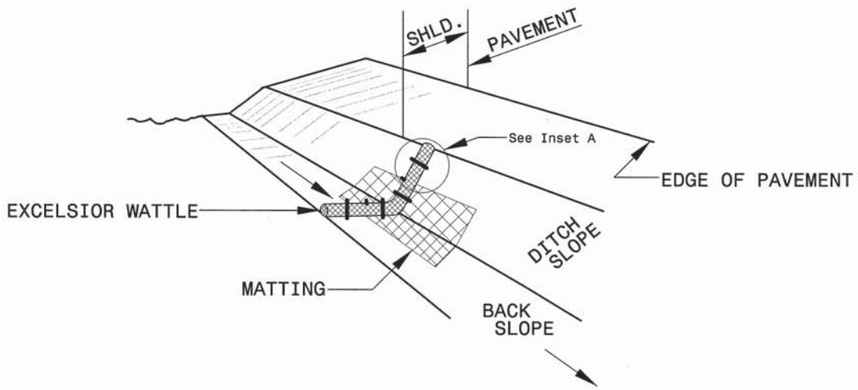

ISOMETRIC VIEW

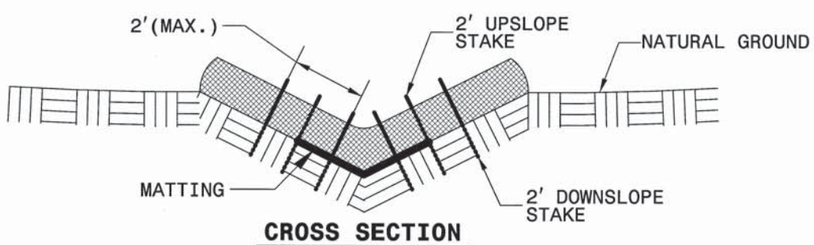

CROSS SECTION VEE DITCH

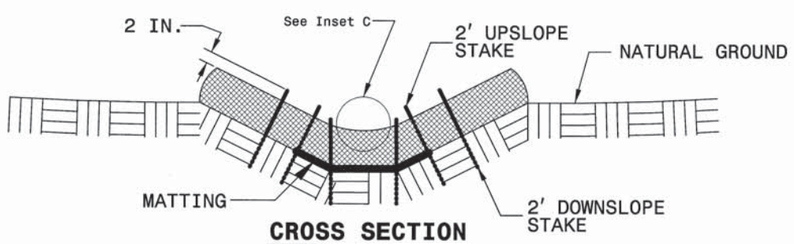

CROSS SECTION TRAPEZOIDAL DITCH

NOTES:

USE MINIMUM 12 IN. DIAMETER EXCELSIOR WATTLE.

USE 2 FT. WOODEN STAKES WITH A 2 IN. BY 2 IN. NOMINAL CROSS SECTION.

ONLY INSTALL WATTLE(S) TO A HEIGHT IN DITCH SO FLOW WILL NOT WASH AROUND WATTLE AND SCOUR DITCH SLOPES AND AS DIRECTED.

INSTALL A MINIMUM OF 2 UPSLOPE STAKES AND 4 DOWNSLOPE STAKES AT AN ANGLE TO WEDGE WATTLE TO BOTTOM OF DITCH.

PROVIDE STAPLES MADE OF 0.125 IN. DIAMETER STEEL WIRE FORMED INTO A U SHAPE NOT LESS THAN 12" IN LENGTH.

INSTALL STAPLES APPROXIMATELY EVERY 1 LINEAR FOOT ON BOTH SIDES OF WATTLE AND AT EACH END TO SECURE IT TO THE SOIL.

INSTALL MATTING IN ACCORDANCE WITH SECTION 1631 OF THE STANDARD SPECIFICATIONS.

PRIOR TO POLYACRYLAMIDE (PAM) APPLICATION, OBTAIN A SOIL SAMPLE FROM PROJECT LOCATION, AND FROM OFFSITE MATERIAL, AND ANALYZE FOR APPROPRIATE PAM FLOCCULANT TO BE APPLIED TO EACH WATTLE.

INITIALLY APPLY 2 OUNCES OF ANIONIC OR NEUTRALLY CHARGED PAM OVER WATTLE WHERE WATER WILL FLOW AND 1 OUNCE OF PAM ON MATTING ON EACH SIDE OF WATTLE. REAPPLY PAM AFTER EVERY RAINFALL EVENT THAT IS EQUAL TO OR EXCEEDS 0.50 IN.

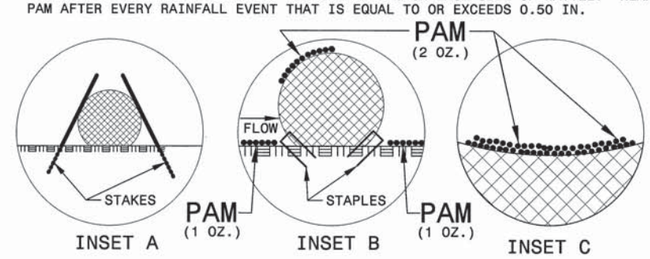

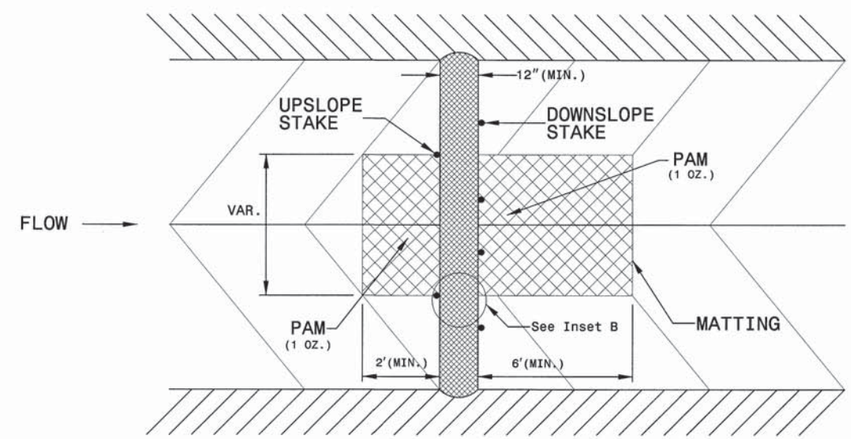

TOP VIEW

NOTES: ANY DEVIATION FROM OPTIONS GIVEN WILL REQUIRE PRIOR APPROVAL BY ENGINEER.

ADDITIONAL EROSION CONTROL DEVICES MAY NEED TO BE INSTALLED AS DIRECTED BY THE ENGINEER.

ROADSIDE ENVIRONMENTAL UNIT
DEPARTMENT OF TRANSPORTATION
DIVISION OF HIGHWAYS
RALEIGH, N.C.

2012 STANDARD SPECIFICATIONS

PROJECT NO. 17BP.4.R.52

NASH COUNTY

STATION: 15+28.67 -L-

REPLACES BRIDGE NO. 32

STATE OF NORTH CAROLINA
DEPARTMENT OF TRANSPORTATION
RALEIGH

BRIDGE ON NC 231
OVER TURKEY CREEK
BETWEEN NC 97 &
SR 1158

33'-10" CLEAR ROADWAY - 60° SKEW

REVISIONS						SHEET NO.
NO.	BY:	DATE:	NO.	BY:	DATE:	34
1			3			TOTAL SHEETS
2			4			36

11/14/2023 3:04:48 PM R:\Structures\Erosion Control\Nash 32_SD_EC_Rudgn

DIVISION OF HIGHWAYS
STATE OF NORTH CAROLINA

SOIL STABILIZATION TIMEFRAMES

SITE DESCRIPTION	STABILIZATION TIME	TIMEFRAME EXCEPTIONS
PERIMETER DIKES, SWALES, DITCHES AND SLOPES	7 DAYS	NONE
HIGH QUALITY WATER (HQW) ZONES	7 DAYS	NONE
SLOPES STEEPER THAN 3:1	7 DAYS	IF SLOPES ARE 10' OR LESS IN LENGTH AND ARE NOT STEEPER THAN 2:1, 14 DAYS ARE ALLOWED.
SLOPES 3:1 OR FLATTER	14 DAYS	7 DAYS FOR SLOPES GREATER THAN 50' IN LENGTH.
ALL OTHER AREAS WITH SLOPES FLATTER THAN 4:1	14 DAYS	NONE, EXCEPT FOR PERIMETERS AND HQW ZONES.

PROJECT NO. 17BP.4.R.52
NASH COUNTY
STATION: 15+28.67 -L-

REPLACES BRIDGE NO. 32

NOTES: ANY DEVIATION FROM OPTIONS GIVEN WILL REQUIRE PRIOR APPROVAL BY ENGINEER.

ADDITIONAL EROSION CONTROL DEVICES MAY NEED TO BE INSTALLED AS DIRECTED BY THE ENGINEER.

ROADSIDE ENVIRONMENTAL UNIT
DEPARTMENT OF TRANSPORTATION
DIVISION OF HIGHWAYS
RALEIGH, N.C.

2012 STANDARD SPECIFICATIONS

STATE OF NORTH CAROLINA
DEPARTMENT OF TRANSPORTATION
RALEIGH

BRIDGE ON NC 231
OVER TURKEY CREEK
BETWEEN NC 97 &
SR 1158

33'-10" CLEAR ROADWAY - 60° SKEW

REVISIONS						SHEET NO.
NO.	BY:	DATE:	NO.	BY:	DATE:	35
1			3			TOTAL SHEETS
2			4			36

11/14/2013 3:04:00 PM R:\Structures\Erosion Control\Nash 32_SD_EC_01.dgn

STATE	STATE PROJECT REFERENCE NO.	SHEET NO.	TOTAL SHEETS
N.C.	17BP.4.R.52	36	36

STATE PROJ. NO.	F.A. PROJ. NO.	DESCRIPTION

PLANTING DETAILS

SEEDLING / LINER BAREROOT PLANTING DETAIL

HEALING IN

1. Locate a healing-in site in a shady, well protected area.
2. Excavate a flat bottom trench 12 inches deep and provide drainage.

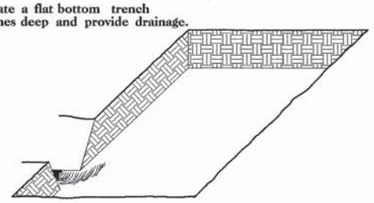

3. Backfill the trench with 2 inches well rotted sawdust. Place a 2 inch layer of well rotted sawdust at a sloping angle at one end of the trench.

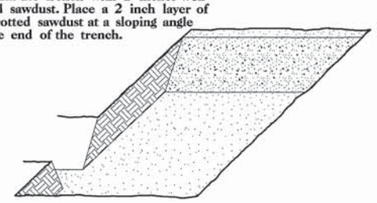

4. Place a single layer of plants against the sloping end so that the root collar is at ground level.

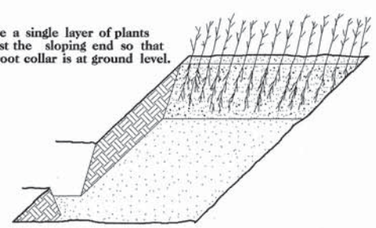

5. Place a 2 inch layer of well rotted sawdust over the roots maintaining a sloping angle.

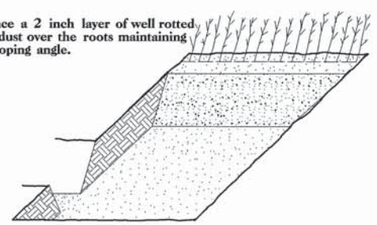

6. Repeat layers of plants and sawdust as necessary and water thoroughly.

DIBBLE PLANTING METHOD
USING THE KBC PLANTING BAR

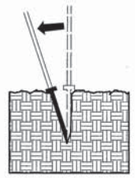

1. Insert planting bar as shown and pull handle toward planter.

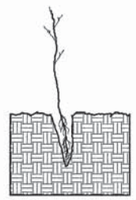

2. Remove planting bar and place seedling at correct depth.

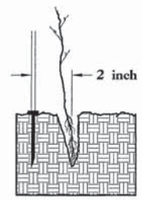

3. Insert planting bar 2 inches toward planter from seedling.

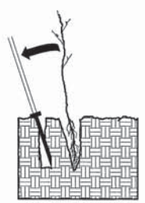

4. Pull handle of bar toward planter, firming soil at bottom.

5. Push handle forward firming soil at top.

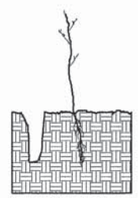

6. Leave compaction hole open. Water thoroughly.

PLANTING NOTES:

PLANTING BAG
During planting, seedlings shall be kept in a moist canvas bag or similar container to prevent the root systems from drying.

KBC PLANTING BAR
Planting bar shall have a blade with a triangular cross section, and shall be 12 inches long, 4 inches wide and 1 inch thick at center.

ROOT PRUNING
All seedlings shall be root pruned, if necessary, so that no roots extend more than 10 inches below the root collar.

REFORESTATION

☐ TREE REFORESTATION SHALL BE PLANTED 6 FT. TO 10 FT. ON CENTER, RANDOM SPACING, AVERAGING 8 FT. ON CENTER, APPROXIMATELY 680 PLANTS PER ACRE.

REFORESTATION

MIXTURE, TYPE, SIZE, AND FURNISH SHALL CONFORM TO THE FOLLOWING:

34%	LIRIODENDRON TULIPIFERA	TULIP POPLAR	12 in - 18 in BR
33%	PLATANUS OCCIDENTALIS	SYCAMORE	12 in - 18 in BR
33%	FRAXINUS PENNSYLVANICA	GREEN ASH	12 in - 18 in BR

NOTES: ANY DEVIATION FROM OPTIONS GIVEN WILL REQUIRE PRIOR APPROVAL BY ENGINEER.

ADDITIONAL EROSION CONTROL DEVICES MAY NEED TO BE INSTALLED AS DIRECTED BY THE ENGINEER.

ROADSIDE ENVIRONMENTAL UNIT
DEPARTMENT OF TRANSPORTATION
DIVISION OF HIGHWAYS
RALEIGH, N.C.

2012 STANDARD SPECIFICATIONS

REFORESTATION DETAIL SHEET

N.C.D.O.T. - ROADSIDE ENVIRONMENTAL UNIT