This electronic collection of documents is provided for the convenience of the user and is Not a Certified Document –

The documents contained herein were originally issued and sealed by the individuals whose names and license numbers appear on each page, on the dates appearing with their signature on that page.
This file or an individual page shall not be considered a certified document.

DocuSign Envelope ID: 7397B666-C294-4DF0-BCBA-FB675CDF6F7F

09/08/99

PROJECT: BP4.R005.1

CONTRACT: DD00357

See Sheet 1A For Index of Sheets
See Sheet 1B For Conventional Symbols

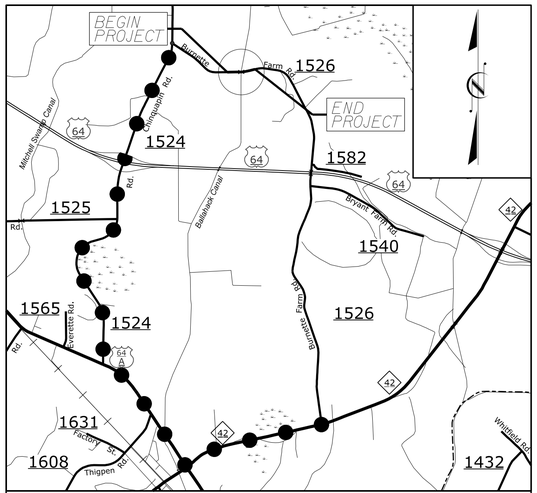

VICINITY MAP

DETOUR ROUTE

N.T.S.

STATE OF NORTH CAROLINA
DIVISION OF HIGHWAYS

EDGECOMBE COUNTY

STATE	STATE PROJECT REFERENCE NO.	SHEET NO.	TOTAL SHEETS
N.C.	BP4.R005.1	1	XX

STATE PROJ. NO.	F.A. PROJ. NO.	DESCRIPTION
BP4.R005.1	N/A	P.E.
BP4.R005.2	N/A	R/W & UTIL.
BP4.R005.3	N/A	CONST.

LOCATION: REPLACE BRIDGE NO. 320078 OVER BALLAHACK CANAL ON SR 1526 (BURNETTE FARM ROAD)

TYPE OF WORK: GRADING, DRAINAGE, PAVING AND CULVERT

90% PLANS

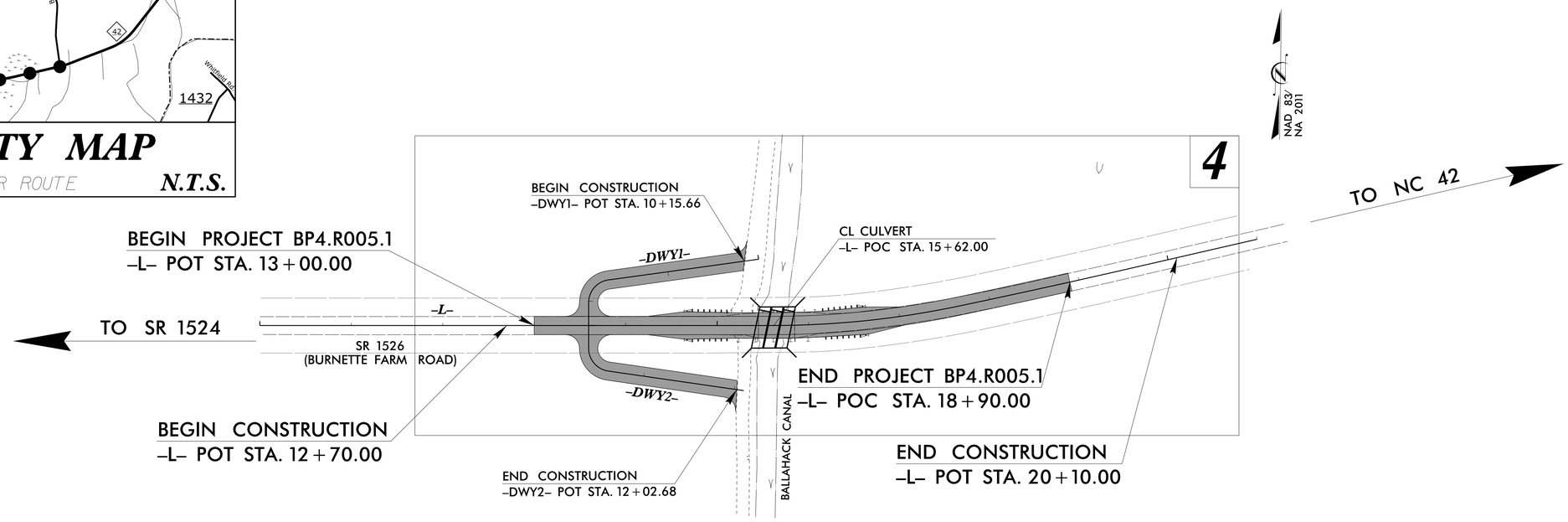

DOCUMENT NOT CONSIDERED FINAL UNLESS ALL SIGNATURES COMPLETED

GRAPHIC SCALES

30 15 0 30 60
PLANS

30 15 0 30 60
PROFILE (HORIZONTAL)

6 3 0 6 12
PROFILE (VERTICAL)

DESIGN DATA

ADT 2021 = 400 VPD
ADT 2040 = 600 VPD
K = N/A
D = 50%
T = 3%*
V = 60 MPH
*TTST = 1% DUALS = 2%
FUNC CLASS =
LOCAL
SUB-REGIONAL TIER

PROJECT LENGTH

LENGTH ROADWAY PROJECT BP4.R005.1	=	0.105 MILES
LENGTH CULVERT PROJECT BP4.R005.1	=	0.007 MILES
TOTAL LENGTH PROJECT BP4.R005.1	=	0.112 MILES

Prepared In the Office of:
CDM Smith
CDM Smith Inc.
5400 Glenwood Avenue
Suite 400
Raleigh, NC 27612-3228
NC COA No. F-1255

FOR THE NORTH CAROLINA DEPARTMENT OF TRANSPORTATION

2018 STANDARD SPECIFICATIONS

RIGHT OF WAY DATE:
AUGUST 2, 2021

LETTING DATE:
FEBRUARY 22, 2022

ADAM M. CONRAD, PE
PROJECT ENGINEER

TRUNG T. NGUYEN, PE
PROJECT DESIGN ENGINEER

JERRY PAGE, PE
NCDOT CONTACT

HYDRAULICS ENGINEER

DocuSigned by: William Denigan
43433752035840 3...
P.E.
SIGNATURE:

NORTH CAROLINA PROFESSIONAL SEAL 040302 ENGINEER WILLIAM KEITH JERNIGAN, JR. 11/9/2021

ROADWAY DESIGN ENGINEER

DocuSigned by: Adam M. Conrad
0DDC0FFA0FD94AD...
P.E.
SIGNATURE:

NORTH CAROLINA PROFESSIONAL SEAL 043767 ENGINEER ADAM M. CONRAD 11/9/2021

STATE OF NORTH CAROLINA DEPARTMENT OF TRANSPORTATION

SYSTIME
...\Proj\7BP4.R.l6_Rdy_tsh.dgn
USER: CONRADAM

PROJECT REFERENCE NO.	SHEET NO.
BP4.R005.1	1A

DOCUMENT NOT CONSIDERED FINAL UNLESS ALL SIGNATURES COMPLETED

ROADWAY DESIGN ENGINEER

NORTH CAROLINA 10/19/2021 SEAL 043767

DocuSigned by: Adam M. Cromwell 10/20/2021 9:09:09 AM EDT

CDM Smith
CDM Smith Inc.
5400 Glenwood Avenue
Suite 400
Raleigh, NC 27612-3228
NC COA No. F-1255

8/17/99

INDEX OF SHEETS

SHEET NUMBER	SHEET
1	TITLE SHEET
1A	INDEX OF SHEETS, GENERAL NOTES AND STANDARD DRAWINGS
1B	CONVENTIONAL SYMBOLS
2A-1THRU 2A-2	PAVEMENT SCHEDULE AND TYPICAL SECTIONS
2C-1	ROADWAY DETAILS
2D-1	DRAINAGE DETAILS
3B-1	ROADWAY SUMMARIES
3D-1	DRAINAGE SUMMARIES
3G-1	GEOTECHNICAL SUMMARIES
4	PLAN SHEET
5	PROFILE SHEET
RW01 THRU RW04	RIGHT-OF-WAY PLAN SHEETS
TMP-1 THRU TMP-3	TRANSPORTATION MANAGEMENT PLANS
PMP-1 THRU PMP-2	PAVEMENT MARKING PLANS
EC-01 THRU EC-05	EROSION CONTROL PLANS
UC-1 THRU UC-4	UTILITY CONSTRUCTION PLANS
UO-1 THRU UO-2	UTILITIES BY OTHERS PLANS
X-1 THRU X-6	CROSS-SECTION INDEX SHEET AND CROSS-SECTIONS
C-1 THRU C-8	CULVERT PLANS

EFF. 01-16-2018
REV.

2018 ROADWAY ENGLISH STANDARD DRAWINGS

The following Roadway Standards as appear in "Roadway Standard Drawings" Highway Design Branch - N. C. Department of Transportation - Raleigh, N. C., Dated January, 2018 are applicable to this project and by reference hereby are considered a part of these plans:

STD.NO.	TITLE
DIVISION 2 - EARTHWORK	
200.03	Method of Clearing - Method III
225.02	Guide for Grading Subgrade - Secondary and Local
225.04	Method of Obtaining Superelevation - Two Lane Pavement
DIVISION 3 - PIPE CULVERTS	
310.10	Driveway Pipe Construction
DIVISION 5 - SUBGRADE, BASES AND SHOULDERS	
560.01	Method of Shoulder Construction - High Side of Superelevated Curve - Method I
DIVISION 8 - INCIDENTALS	
862.01	Guardrail Placement
862.02	Guardrail Installation

GENERAL NOTES:

2018 SPECIFICATIONS
EFFECTIVE: 01-16-2018
REVISED:

GRADE LINE:
GRADING AND SURFACING:

THE GRADE LINES SHOWN DENOTE THE FINISHED ELEVATION OF THE PROPOSED SURFACING AT GRADE POINTS SHOWN ON THE TYPICAL SECTIONS. GRADE LINES MAY BE ADJUSTED AT THEIR BEGINNING AND ENDING AND AT STRUCTURES AS DIRECTED BY THE ENGINEER IN ORDER TO SECURE A PROPER TIE-IN.

CLEARING:

CLEARING ON THIS PROJECT SHALL BE PERFORMED TO THE LIMITS ESTABLISHED BY METHOD III.

SUPERELEVATION:

ALL CURVES ON THIS PROJECT SHALL BE SUPERELEVATED IN ACCORDANCE WITH STD. NO. 225.04 USING THE RATE OF SUPERELEVATION AND RUNOFF SHOWN ON THE PLANS. SUPERELEVATION IS TO BE REVOLVED ABOUT THE GRADE POINTS SHOWN ON THE TYPICAL SECTIONS.

SHOULDER CONSTRUCTION:

ASPHALT, EARTH, AND CONCRETE SHOULDER CONSTRUCTION ON THE HIGH SIDE OF SUPERELEVATED CURVES SHALL BE IN ACCORDANCE WITH STD. NO. 560.01

SIDE ROADS:

THE CONTRACTOR WILL BE REQUIRED TO DO ALL NECESSARY WORK TO PROVIDE SUITABLE CONNECTIONS WITH ALL ROADS, STREETS, AND DRIVES ENTERING THIS PROJECT. THIS WORK WILL BE PAID FOR AT THE CONTRACT UNIT PRICE FOR THE PARTICULAR ITEMS INVOLVED.

GUARDRAIL:

THE GUARDRAIL LOCATIONS SHOWN ON THE PLANS MAY BE ADJUSTED DURING CONSTRUCTION AS DIRECTED BY THE ENGINEER. THE CONTRACTOR SHOULD CONSULT WITH THE ENGINEER PRIOR TO ORDERING GUARDRAIL MATERIAL.

SUBSURFACE PLANS:

NO SUBSURFACE PLANS ARE AVAILABLE ON THIS PROJECT. THE CONTRACTOR SHOULD MAKE HIS OWN INVESTIGATION AS TO THE SUBSURFACE CONDITIONS.

UTILITIES:

UTILITY OWNERS ON THIS PROJECT ARE MARTIN-EDGECOMBE EMC,

LUMEN/CENTURYLINK, EDGECOMBE COUNTY WATER AND SEWER

ANY RELOCATION OF EXISTING UTILITIES WILL BE ACCOMPLISHED BY OTHERS, EXCEPT AS SHOWN ON THE PLANS.

RIGHT-OF-WAY MARKERS:

ALL RIGHT-OF-WAY MARKERS ON THIS PROJECT SHALL BE PLACED BY OTHERS.

$$$$SYSTIME$$$$
$$$$USERNAME$$$$

12/2/2016

PROJECT REFERENCE NO.	SHEET NO.
BP4.R005.I	1B

STATE OF NORTH CAROLINA, DIVISION OF HIGHWAYS

CONVENTIONAL PLAN SHEET SYMBOLS

Note: Not to Scale

**S.U.E. = Subsurface Utility Engineering*

BOUNDARIES AND PROPERTY:

- State Line
- County Line
- Township Line
- City Line
- Reservation Line
- Property Line
- Existing Iron Pin — EIP
- Computed Property Corner
- Property Monument — ECM
- Parcel/Sequence Number — 123
- Existing Fence Line
- Proposed Woven Wire Fence
- Proposed Chain Link Fence
- Proposed Barbed Wire Fence
- Existing Wetland Boundary — WLB
- Proposed Wetland Boundary — WLB
- Existing Endangered Animal Boundary — EAB
- Existing Endangered Plant Boundary — EPB
- Existing Historic Property Boundary — HPB
- Known Contamination Area: Soil — S
- Potential Contamination Area: Soil — S
- Known Contamination Area: Water — W
- Potential Contamination Area: Water — W
- Contaminated Site: Known or Potential

BUILDINGS AND OTHER CULTURE:

- Gas Pump Vent or U/G Tank Cap
- Sign — S
- Well — W
- Small Mine
- Foundation
- Area Outline
- Cemetery
- Building
- School
- Church
- Dam

HYDROLOGY:

- Stream or Body of Water
- Hydro, Pool or Reservoir
- Jurisdictional Stream — JS
- Buffer Zone 1 — BZ 1
- Buffer Zone 2 — BZ 2
- Flow Arrow
- Disappearing Stream
- Spring
- Wetland
- Proposed Lateral, Tail, Head Ditch — FLOW
- False Sump

RAILROADS:

- Standard Gauge — CSX TRANSPORTATION
- RR Signal Milepost — MILEPOST 35
- Switch — SWITCH
- RR Abandoned
- RR Dismantled

RIGHT OF WAY & PROJECT CONTROL:

- Secondary Horiz and Vert Control Point
- Primary Horiz Control Point
- Primary Horiz and Vert Control Point
- Exist Permanent Easment Pin and Cap
- New Permanent Easement Pin and Cap
- Vertical Benchmark
- Existing Right of Way Marker
- Existing Right of Way Line
- New Right of Way Line — RW
- New Right of Way Line with Pin and Cap — RW
- New Right of Way Line with Concrete or Granite R/W Marker — RW
- New Control of Access Line with Concrete C/A Marker — CA
- Existing Control of Access — CA
- New Control of Access — CA
- Existing Easement Line — E
- New Temporary Construction Easement — E
- New Temporary Drainage Easement — TDE
- New Permanent Drainage Easement — PDE
- New Permanent Drainage / Utility Easement — DUE
- New Permanent Utility Easement — PUE
- New Temporary Utility Easement — TUE
- New Aerial Utility Easement — AUE

ROADS AND RELATED FEATURES:

- Existing Edge of Pavement
- Existing Curb
- Proposed Slope Stakes Cut — C
- Proposed Slope Stakes Fill — F
- Proposed Curb Ramp — CR
- Existing Metal Guardrail — T
- Proposed Guardrail — T
- Existing Cable Guiderail
- Proposed Cable Guiderail
- Equality Symbol
- Pavement Removal

VEGETATION:

- Single Tree
- Single Shrub
- Hedge
- Woods Line
- Orchard
- Vineyard — Vineyard

EXISTING STRUCTURES:

MAJOR:

- Bridge, Tunnel or Box Culvert — CONC
- Bridge Wing Wall, Head Wall and End Wall — CONC WW

MINOR:

- Head and End Wall — CONC HW
- Pipe Culvert
- Footbridge
- Drainage Box: Catch Basin, DI or JB — CB
- Paved Ditch Gutter
- Storm Sewer Manhole — S
- Storm Sewer — S

UTILITIES:

POWER:

- Existing Power Pole
- Proposed Power Pole
- Existing Joint Use Pole
- Proposed Joint Use Pole
- Power Manhole — P
- Power Line Tower
- Power Transformer
- U/G Power Cable Hand Hole
- H-Frame Pole
- U/G Power Line LOS B (S.U.E.*) — P
- U/G Power Line LOS C (S.U.E.*) — P
- U/G Power Line LOS D (S.U.E.*) — P

TELEPHONE:

- Existing Telephone Pole
- Proposed Telephone Pole
- Telephone Manhole — T
- Telephone Pedestal — T
- Telephone Cell Tower
- U/G Telephone Cable Hand Hole — HH
- U/G Telephone Cable LOS B (S.U.E.*) — T
- U/G Telephone Cable LOS C (S.U.E.*) — T
- U/G Telephone Cable LOS D (S.U.E.*) — T
- U/G Telephone Conduit LOS B (S.U.E.*) — TC
- U/G Telephone Conduit LOS C (S.U.E.*) — TC
- U/G Telephone Conduit LOS D (S.U.E.*) — TC
- U/G Fiber Optics Cable LOS B (S.U.E.*) — T FO
- U/G Fiber Optics Cable LOS C (S.U.E.*) — T FO
- U/G Fiber Optics Cable LOS D (S.U.E.*) — T FO

WATER:

- Water Manhole — W
- Water Meter
- Water Valve
- Water Hydrant
- U/G Water Line LOS B (S.U.E*) — W
- U/G Water Line LOS C (S.U.E*) — W
- U/G Water Line LOS D (S.U.E*) — W
- Above Ground Water Line — A/G Water

TV:

- TV Pedestal — C
- TV Tower
- U/G TV Cable Hand Hole — HH
- U/G TV Cable LOS B (S.U.E.*) — TV
- U/G TV Cable LOS C (S.U.E.*) — TV
- U/G TV Cable LOS D (S.U.E.*) — TV
- U/G Fiber Optic Cable LOS B (S.U.E.*) — TV FO
- U/G Fiber Optic Cable LOS C (S.U.E.*) — TV FO
- U/G Fiber Optic Cable LOS D (S.U.E.*) — TV FO

GAS:

- Gas Valve
- Gas Meter
- U/G Gas Line LOS B (S.U.E.*) — G
- U/G Gas Line LOS C (S.U.E.*) — G
- U/G Gas Line LOS D (S.U.E.*) — G
- Above Ground Gas Line — A/G Gas

SANITARY SEWER:

- Sanitary Sewer Manhole
- Sanitary Sewer Cleanout
- U/G Sanitary Sewer Line — SS
- Above Ground Sanitary Sewer — A/G Sanitary Sewer
- SS Forced Main Line LOS B (S.U.E.*) — FSS
- SS Forced Main Line LOS C (S.U.E.*) — FSS
- SS Forced Main Line LOS D (S.U.E.*) — FSS

MISCELLANEOUS:

- Utility Pole
- Utility Pole with Base
- Utility Located Object
- Utility Traffic Signal Box — S
- Utility Unknown U/G Line LOS B (S.U.E.*) — ?UTL
- U/G Tank; Water, Gas, Oil
- Underground Storage Tank, Approx. Loc. — UST
- A/G Tank; Water, Gas, Oil
- Geoenvironmental Boring
- U/G Test Hole LOS A (S.U.E.*)
- Abandoned According to Utility Records — AATUR
- End of Information — E.O.I.

DocuSign Envelope ID: E3C41C7B-6C37-4378-93EE-AA280C812EC9

PROJECT REFERENCE NO.	SHEET NO.
BP4.R005.1	2A-1
ROADWAY DESIGN ENGINEER	PAVEMENT DESIGN ENGINEER

NORTH CAROLINA PROFESSIONAL SEAL 043767 ENGINEER

DocuSigned by: A. Ryan M. Cundiff

CDM Smith
CDM Smith Inc.
5400 Glenwood Avenue
Suite 400
Raleigh, NC 27612-3228
NC COA No. F-1259

DOCUMENT NOT CONSIDERED FINAL UNLESS ALL SIGNATURES COMPLETED

PAVEMENT SCHEDULE

(FINAL PAVEMENT DESIGN)

C1	PROP. APPROX. 1.5″ ASPHALT CONCRETE SURFACE COURSE, TYPE S9.5B, AT AN AVERAGE RATE OF 165 LBS. PER SQ. YD.
C2	PROP. APPROX. 3″ ASPHALT CONCRETE SURFACE COURSE, TYPE S9.5B, AT AN AVERAGE RATE OF 165 LBS. PER SQ. YD. IN EACH OF TWO LAYERS.
C3	PROP. VAR. DEPTH ASPHALT CONCRETE SURFACE COURSE, TYPE S9.5B, AT AN AVERAGE RATE OF 110 LBS. PER SQ. YD. PER 1″ DEPTH. TO BE PLACED IN LAYERS NOT LESS THAN 1″ IN DEPTH OR GREATER THAN 1.5″ IN DEPTH.
E1	PROP. APPROX. 4″ ASPHALT CONCRETE BASE COURSE, TYPE B25.0C, AT AN AVERAGE RATE OF 456 LBS. PER SQ. YD.
E2	PROP. VAR. DEPTH ASPHALT CONCRETE BASE COURSE, TYPE B25.0C, AT AN AVERAGE RATE OF 114 LBS. PER SQ. YD. PER 1″ DEPTH. TO BE PLACED IN LAYERS NOT LESS THAN 3″ IN DEPTH OR GREATER THAN 5.5″ IN DEPTH.
J1	6″ AGGREGATE BASE COURSE.
J2	VAR. AGGREGATE BASE COURSE.
T	EARTH MATERIAL.
U	EXISTING PAVEMENT.
V	INCIDENTAL MILLING
W	VARIABLE DEPTH ASPHALT PAVEMENT (SEE -L- WEDGING DETAIL)

NOTE: ALL PAVEMENT EDGE SLOPES ARE 1:1 UNLESS SHOWN OTHERWISE.

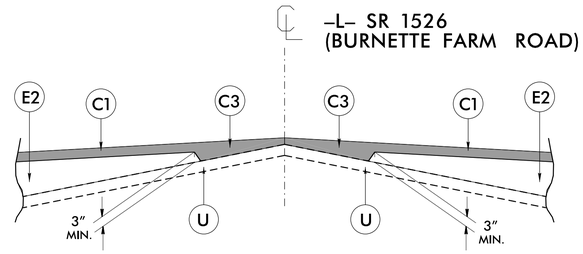

Detail Showing Method Of Wedging – W
–L–

MILLING DETAIL
INCIDENTAL MILLING AT BEGIN/END FOR TIE–INS

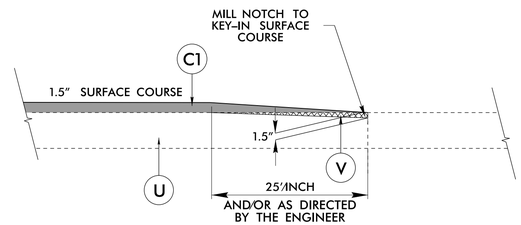

–L– STA. 13 + 00.00 TO STA. 13 + 39.21
–L– STA. 18 + 09.08 TO STA. 18 + 90.00

* 7′ W/GUARDRAIL

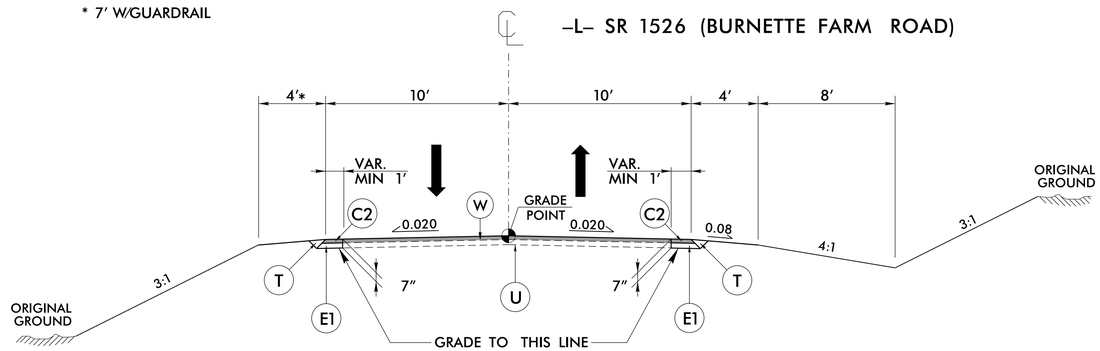

TYPICAL SECTION NO. 1

USE TYPICAL SECTION NO. 1

–L– STA. 13 + 00.00 TO STA. 14 + 40.00
–L– STA. 16 + 84.00 TO STA. 18 + 90.00

6/2/99
-SYSTIME
-SYSTIME
17BP.4.R.116.Rdy_typ.dgn
USER: PBASNIK

DocuSign Envelope ID: E3C41C7B-6C37-4378-93EE-AA280C812EC9

PROJECT REFERENCE NO.	SHEET NO.
BP4.R005.1	2A-2

ROADWAY DESIGN ENGINEER

NORTH CAROLINA 10/18/2024 SEAL 043767 ENGINEER A. ADAM M. CORRAD

DocuSigned by: 6DDC0F

PAVEMENT DESIGN ENGINEER

CDM Smith
CDM Smith Inc.
5400 Glenwood Avenue
Suite 400
Raleigh, NC 27612-3228
NC COA No. F-1259

DOCUMENT NOT CONSIDERED FINAL UNLESS ALL SIGNATURES COMPLETED

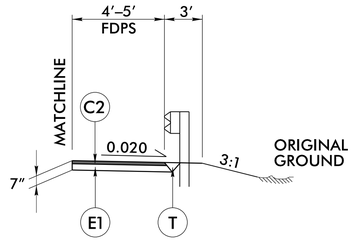

DETAIL A

USE DETAIL A IN CONJUNCTION WITH TYPICAL SECTION NO. 2

–L– STA. 14+64.00 TO STA. 16+64.00 (RT)
–L– STA. 14+64.00 TO STA. 16+64.00 (LT)

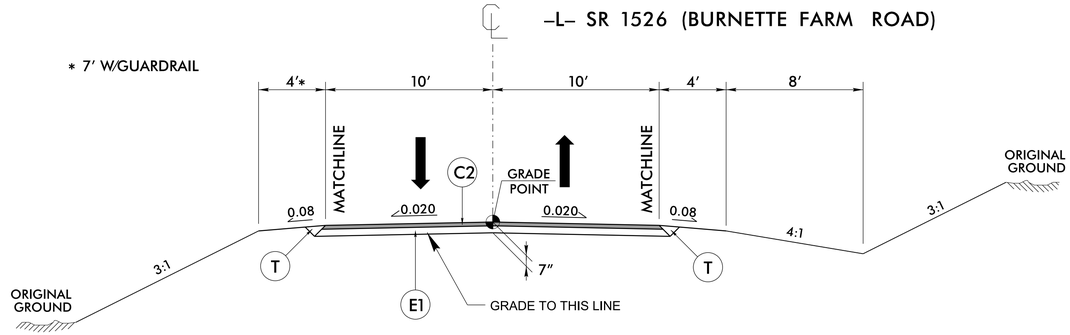

TYPICAL SECTION NO. 2

USE TYPICAL SECTION NO. 2

–L– STA. 14+40.00 TO STA 15+42.59
–L– STA. 15+81.44 TO STA 16+84.00

PAVEMENT SCHEDULE (FINAL PAVEMENT DESIGN)	
C1	1.5″ S9.5B
C2	3″ S9.5B
C3	VAR. S9.5B
E1	4″ B25.0C
E2	VAR. B25.0C
J1	6″ ABC
J2	VAR. AGGREGATE BASE COURSE
T	EARTH MATERIAL
U	EXIST. PAVEMENT
V	INCIDENTAL MILLING
W	WEDGING

PAVEMENT EDGESLOPES 1:1 UNLESS NOTED OTHERWISE

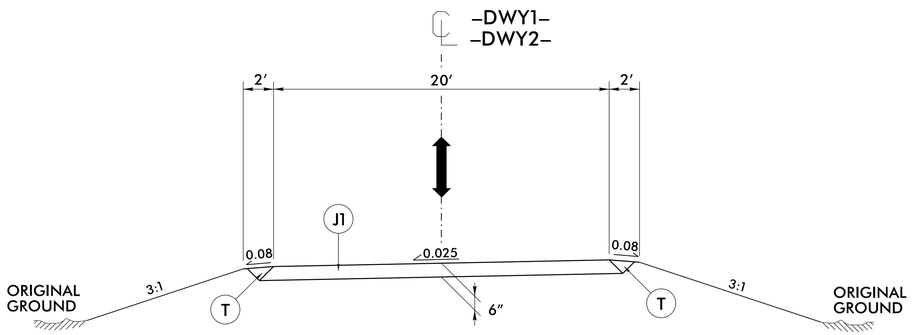

TYPICAL SECTION NO. 3

USE TYPICAL SECTION NO. 3

–DWY1– STA. 10+15.66 TO STA 12+16.61
–DWY2– STA. 10+10.00 TO STA 12+02.68

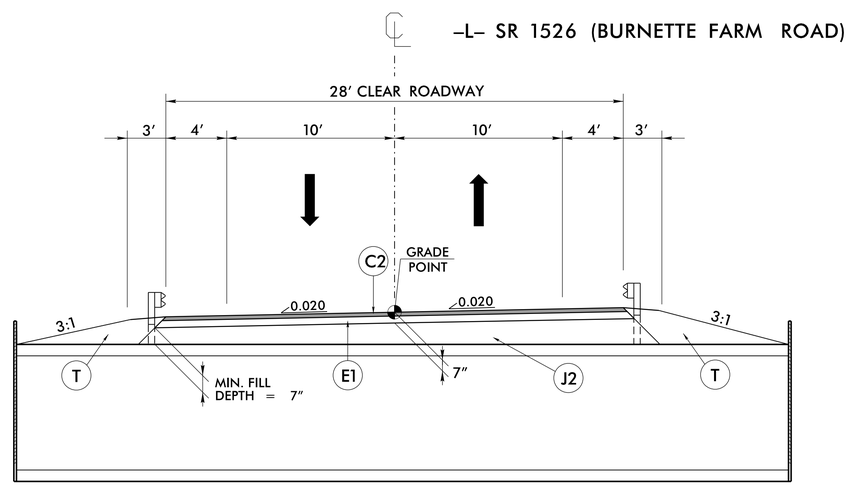

CULVERT TYPICAL SECTION

USE CULVERT TYPICAL SECTION

NOTE: EXTEND AGGREGATE BASE COURSE (PAVEMENT LAYER 'J2') FIVE (5) FEET BEYOND THE BEGIN/END CULVERT STATIONS

6/2/99
SYSTIME = 10/17/2024 16:17
PGP = R:\BP4\BP4_R-116_Rdy_typ.dgn
USER = PPASTANIK

DocuSign Envelope ID: 62AE6610-E020-4F65-86DD-7E9B8344E4C8

PROJECT REFERENCE NO.	SHEET NO.
BP4.R005.1	2C-1

DOCUMENT NOT CONSIDERED FINAL UNLESS ALL SIGNATURES COMPLETED

STATE OF NORTH CAROLINA
DEPT. OF TRANSPORTATION
DIVISION OF HIGHWAYS
RALEIGH, N.C.

ROADWAY DETAIL DRAWING FOR
GUARDRAIL INSTALLATION

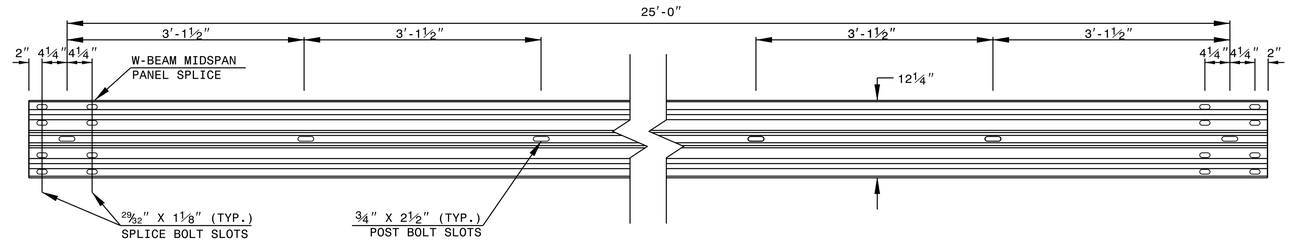

STANDARD W-BEAM GUARDRAIL

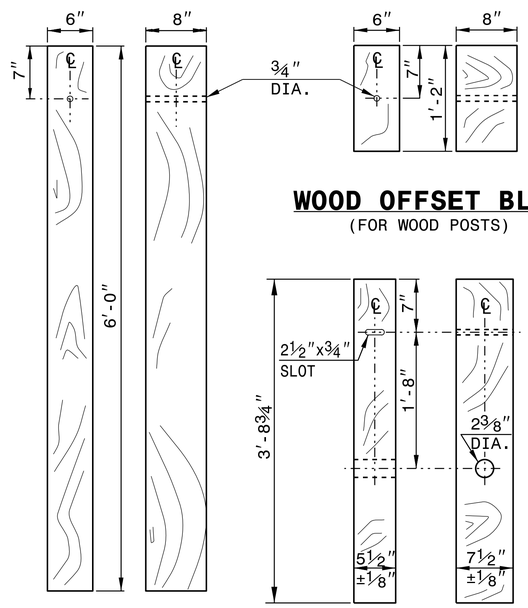

STANDARD LINE POST

WOOD OFFSET BLOCK
(FOR WOOD POSTS)

SHORT WOOD BREAKAWAY POST

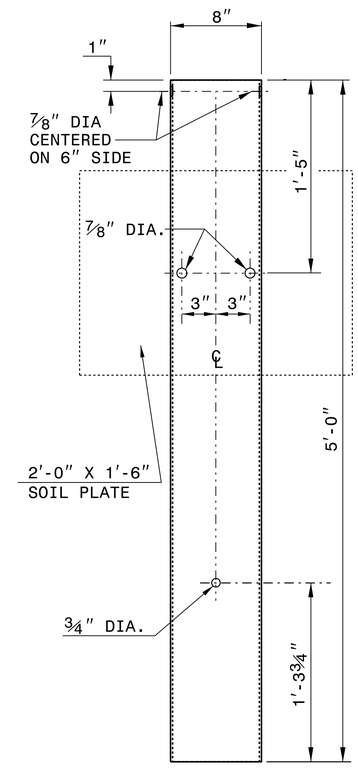

STEEL TUBE
TS 6"x8"x0.1875"

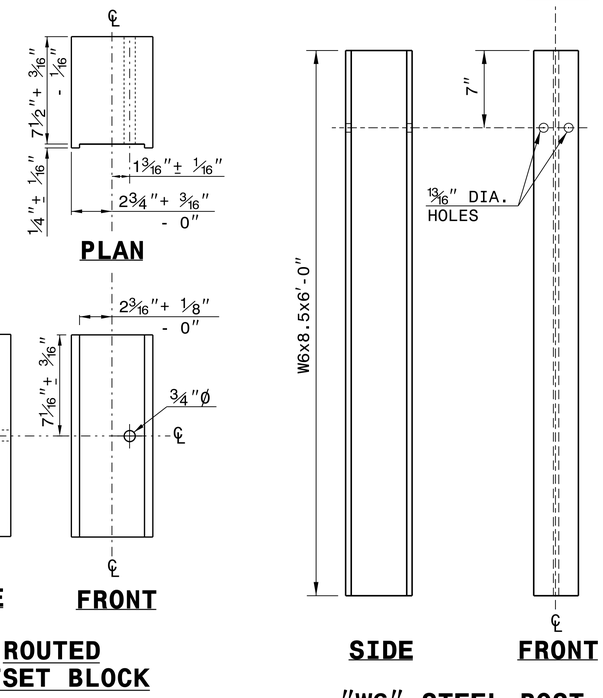

PLAN

SIDE **FRONT**

ROUTED OFFSET BLOCK

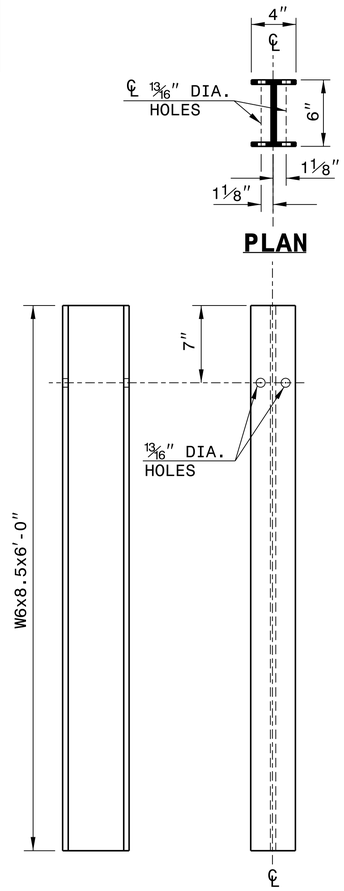

PLAN

SIDE **FRONT**

"W6" STEEL POST

SYSTEM PARTS

SHEET 6 OF 8
862D02

STATE OF NORTH CAROLINA
DEPT. OF TRANSPORTATION
DIVISION OF HIGHWAYS
RALEIGH, N.C.

ROADWAY DETAIL DRAWING FOR
GUARDRAIL INSTALLATION

SHEET 6 OF 8
862D02

NORTH CAROLINA PROFESSIONAL SEAL 022966 ENGINEER JOHN W. HOWERTON
07/31/2018

CONTRACTS STANDARDS AND DEVELOPMENT UNIT
Office 919-707-6950 FAX 919-250-4119

SEE TITLE BLOCK

ORIGINAL BY: J.HOWERTON DATE: 3-7-2018
MODIFIED BY: DATE:
CHECKED BY: DATE:
FILE SPEC.:

DocuSign Envelope ID: E3C41C7B-6C37-4378-93EE-AA280C812EC9

8/17/99

REVISIONS

PROJECT REFERENCE NO.	SHEET NO.
BP4.R005.1	2D-1

DOCUMENT NOT CONSIDERED FINAL UNLESS ALL SIGNATURES COMPLETED

HYDRAULICS ENGINEER

NORTH CAROLINA PROFESSIONAL SEAL 040302 ENGINEER WILLIAM KEITH JERNIGAN, JR.

DocuSigned by: William Keith Jernigan, Jr. 4343375205484...

MI Engineering, PLLC
1011 Schaub Drive
Suite 100
Raleigh, NC 27606
NC COA No. P-0671

DETAIL A
SPECIAL LATERAL BASE DITCH
(Not to Scale)

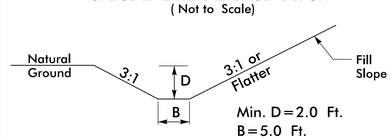

FROM –L– STA. 13+00 TO STA. 15+00 LT

DETAIL B
STANDARD BASE DITCH
(Not to Scale)

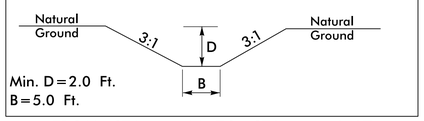

FROM STA. 15+00 TO STA. 15+50 LT

DETAIL C
SPECIAL LATERAL BASE DITCH
(Not to Scale)

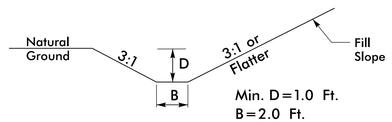

FROM –L– STA. 13+00 TO STA. 15+00 RT

DETAIL D
STANDARD BASE DITCH
(Not to Scale)

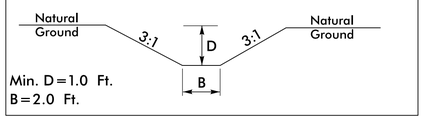

FROM STA. 15+00 TO STA. 15+40 RT

DETAIL G
RIP RAP AT EMBANKMENT
(Not to Scale)

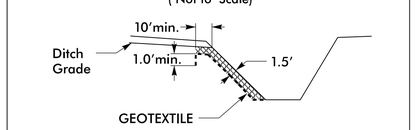

FROM –L– STA. 15+45 TO STA. 15+60 LT
EST. 3 TON, 8 SY GEOTEXTILE
FROM –L– STA. 15+65 TO STA. 15+75 RT
EST. 2 TON, 5 SY GEOTEXTILE

DETAIL E
SPECIAL LATERAL 'V' DITCH
(Not to Scale)

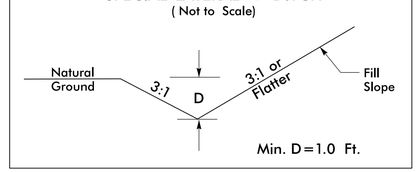

FROM –L– STA. 16+50 TO STA. 18+90 LT
FROM –L– STA. 16+00 TO STA. 18+90 RT

DETAIL F
STANDARD 'V' DITCH
(Not to Scale)

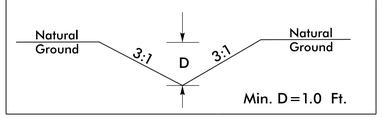

FROM STA. 15+84 TO STA. 16+50 LT
FROM STA. 15+68 TO STA. 16+00 RT

DETAIL H
INLET CHANNEL DETAIL (LOOKING D/S)
(Not to Scale)

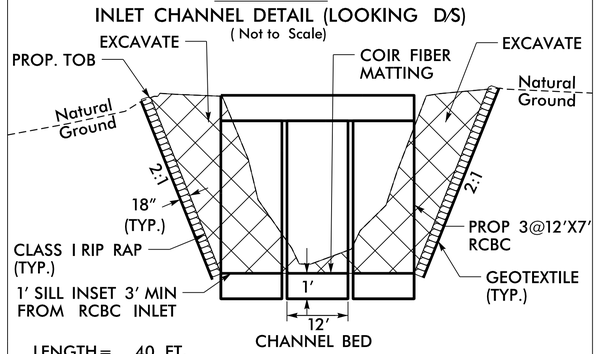

LENGTH= 40 FT.
EST.= 55 TONS OF CLASS I RIP RAP
115 SY GEOTEXTILE
287 CY EXCAVATION

DETAIL I
OUTLET CHANNEL DETAIL (LOOKING D/S)
(Not to Scale)

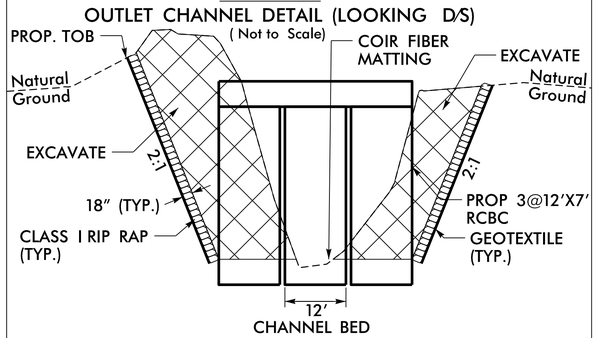

LENGTH= 40 FT.
EST.= 56 TONS OF CLASS I RIP RAP
112 SY GEOTEXTILE
330 CY EXCAVATION

SYSTIME
...\Proj\BP4.R005.1.Rdy.2D-1.dgn
SER: BERSTANK

COMPUTED BY: T. NGUYEN DATE: 9/7/2021
CHECKED BY: A. CONRAD DATE: 9/7/2021

PROJECT REFERENCE NO.	SHEET NO.
BP4.R005.1	3B-1

STATE OF NORTH CAROLINA
DIVISION OF HIGHWAYS

"N" = DISTANCE FROM EDGE OF LANE TO FACE OF GUARDRAIL.
TOTAL SHOULDER WIDTH = DISTANCE FROM EDGE OF TRAVEL LANE TO SHOULDER BREAK POINT.
FLARE LENGTH = DISTANCE FROM LAST SECTION OF PARALLEL GUARDRAIL TO END OF GUARDRAIL.
W = TOTAL WIDTH OF FLARE FROM BEGINNING OF TAPER TO END OF GUARDRAIL.
G = GATING IMPACT ATTENUATOR TYPE 350
NG = NON-GATING IMPACT ATTENUATOR TYPE 350

GUARDRAIL SUMMARY (LF)

SURVEY LINE	BEG. STA.	END STA.	LOCATION	LENGTH			WARRANT POINT		"N" DIST. FROM E.O.L.	TOTAL SHOUL. WIDTH	FLARE LENGTH		W		ANCHORS									IMPACT ATTENUATOR TYPE 350			SINGLE FACED GUARDRAIL	REMOVE EXISTING GUARDRAIL	REMOVE AND STOCKPILE EXISTING GUARDRAIL	REMARKS
				STRAIGHT	SHOP CURVED	DOUBLE FACED	APPROACH END	TRAILING END			APPROACH END	TRAILING END	APPROACH END	TRAILING END	GREU TL-3									EA	G	NG				
-L-	14+64.00	16+64.00	LT	200.0			15+84.34	15+40.71	4.00	7.00	50.00	50.00	1.00	1.00	2															
-L-	14+64.00	16+64.00	RT	200.0			15+40.71	15+84.35	4.00	7.00	50.00	50.00	1.00	1.00	2															
			SUBTOTALS	400.00											4															
			GREU TL-3, 4@50.00'	-200.00																										
			PROJECT TOTALS	200.00											4															
			SAY	200.00											4															
ADDITIONAL GUARDRAIL POSTS = 10 EA																														

SUMMARY OF EARTHWORK (CY)

LOCATION	UNCLASSIFIED EXCAVATION	UNDERCUT	EMBT+%	BORROW	WASTE
-L- 13+00.00 - 18+90.00	443		1,605	1,162	
SUBTOTAL	443		1,605	1,162	
PROJECT TOTAL	443		1,605	1,162	
EST. 5% TO REPLACE TOP SOIL ON BORROW PIT				58	
GRAND TOTAL	443		1,605	1,220	
SAY	500			1,300	

SHALLOW UNDERCUT = 620 CY
SUBGRADE STABILIZATION, CLASS IV = 40 TON

NOTE: Earthwork quantities are calculated by the Roadway Design Unit. These earthwork quantities are based in part on subsurface data provided by the Geotechnical Engineering Unit.

Note: Approximate quantities only. Unclassified Excavation, Borrow Excavation, Fine Grading, Clearing and Grubbing, and Removal of Existing Pavement will be paid for at the contract lump sum price for "Grading."

SUMMARY OF PAVEMENT REMOVAL (SY)

LINE	STATION - STATION	LOCATION	REMOVAL (SY)
-L-	STA. 14+40.00 TO STA. 15+44.78	CL	245.94
-L-	STA. 15+84.00 TO STA. 16+84.00	CL	237.74
GRAND TOTAL			483.68
SAY			490

6/21/00
SYSTIME
SYSTIME R:\16_Rdy_sum_3B-1.dgn
USER:FRANK

MIENG01112017

COMPUTED BY:	KTE	DATE:	07/27/2021
CHECKED BY:	WKJ	DATE:	07/27/2021

PROJECT NO.	SHEET NO.
BP4.R005.1	3D-1

NORTH CAROLINA DEPARTMENT OF TRANSPORTATION
DIVISION OF HIGHWAYS

**Note: Invert Elevations indicated are for Bid Purposes only and shall not be used for project construction stakeout.
See "Standard Specifications For Roads and Structures, Section 300-5".**

LIST OF PIPES, ENDWALLS, ETC. (FOR PIPES 48 INCHES & UNDER)

LINE & STATION / SIZE / THICKNESS OR GAUGE	OFFSET		STRUCTURE NUMBER FROM	STRUCTURE NUMBER TO	TOP ELEVATION FT.	INVERT ELEVATION FT.	INVERT ELEVATION FT.	MINIMUM REQUIRED SLOPE %	Drainage Pipe (RCP, CSP, CAAP, HDPE, PVC, or PP PIPE) 12	15	18	24	30	36	42	48	DO NOT USE RCP	DO NOT USE CSP	DO NOT USE CAAP	DO NOT USE HDPE	DO NOT USE PVC	DO NOT USE PP PIPE
-L- 15+30	24	LT	0000																			
-L- 13+60	27	LT	0401									32										
-L- 15+31	22	RT	0000																			
-L- 15+88	21	LT	0000																			
-L- 15+81	23	RT	0000																			
-L- 13+61	25	RT	0402							32												
SHEET TOTALS										32		32										
PROJECT TOTALS										32		32										

OPEN THROAT C.B. STD. 840.04 OR STD. 840.05	CONCRETE BRIDGE APPROACH D.I. STD. 840.13	D.I. STD. 840.14 OR STD. 840.15	D.I. FRAME AND GRATES STD. 840.16	G.D.I. TYPE "A" STD. 840.17 OR STD. 840.26	G.D.I. TYPE "B" STD. 840.18 OR STD. 840.27	G.D.I. TYPE "D" STD. 840.19 OR STD. 840.28	G.D.I. (W.S. FLAT) FRAME WITH GRATE STD. 840.20	G.D.I. (W.S. FLAT) FRAME W/ 2 GRATES STD. 840.20	G.D.I. (W.S. SAG) FRAME W/ GRATE STD. 840.22	G.D.I. (W.S. SAG) FRAME W/ 2 GRATES STD. 840.22	G.D.I. (N.S. SAG) FRAME W/ GRATE STD. 840.24	G.D.I. (N.S. SAG) FRAME W/ 2 GRATES STD. 840.24	G.D.I. (N.S. FLAT) FRAME W/ GRATE STD. 840.29	G.D.I. (N.S. FLAT) FRAME W/ 2 GRATES STD. 840.29	DRIVEWAY D.I. STD. 840.30	FRAME W/ GRATE FOR DRIVEWAY STD. 840.30	J.B. STD. 840.31 OR STD. 840.32	ANGLED VANE GRATES AND FRAMES STD. 840.33	T.B.J.B. STD. 840.34	T.B.D.I. STD. 840.35	T.B.D.I. FOR STEEL GRATES STD. 840.36	STEEL FRAME WITH TWO GRATES STD. 840.37	TEMP STEEL PLATE COVER MASONRY DRAINAGE	##" SPRING BOX PIPE	SPRING BOX STD. 840.41	M.H. STD. 840.51, STD. 840.52, OR STD. 840.53	M.H. FRAME AND COVER STD. 840.54	##" x ##" x ##" PERF. C.S.P. TEE RISER ##" THICK	##" x ##" x ##" PERF. C.S.P. TEE RISER ##" THICK	##" PIPE END SECTION	##" PIPE END SECTION	##" PIPE END SECTION	##" PIPE END SECTION	CONVERT EXISTING C.B. TO J.B.	CONVERT EXISTING C.B. TO D.I.	CONVERT EXISTING D.I. TO J.B.	CONVERT EXISTING J.B. TO D.I.	ADJUST C.B.	ADJUST D.I.	##" DRAINAGE PIPE ELBOW	##" DRAINAGE PIPE ELBOW	##" DRAINAGE PIPE ELBOW	##" R.C. ELBOW	15" C.S. ELBOW	18" C.S. ELBOW	24" C.S. ELBOW	30" C.S. ELBOW	36" C.S. ELBOW	##" C.S. ELBOW	BERM DITCH OUTLET STD. 850.10 (PER EACH)	BERM DITCH OUTLET STD. 850.11 (PER EACH)	##" SLUICE GATE (##" SIZE SLUICE GATE)	MODIFIED CONC. FLUME	PREFORMED SCOUR HOLE (PER EACH)	ENERGY DISSIPATION BASIN	FLOWABLE FILL CY	CONCRETE COLLARS CL. "B" STD. 840.72 CY	CONCRETE AND BRICK PIPE PLUG STD. 840.71 CY

LINE & STATION	PIPE REMOVAL LIN. FT.	REMARKS
-L- 15+30	39	
-L- 13+60		Drive Pipe
-L- 15+31	30	
-L- 15+88	20	
-L- 15+81	20	
-L- 13+61		Drive Pipe
SHEET TOTALS	109	
PROJECT TOTALS	109	

ABBREVIATIONS

C.A.A.	CORRUGATED ALUMINIUM ALLOY
C.B.	CATCH BASIN
C.S.	CORRUGATED STEEL
D.I.	DROP INLET
G.D.I.	GRATED DROP INLET
H.D.P.E.	HIGH DENSITY POLYETHYLENE
J.B.	JUNCTION BOX
M.H.	MANHOLE
N.S.	NARROW SLOT
P.V.C.	POLYVINYL CHLORIDE
R.C.	REINFORCED CONCRETE
T.B.D.I.	TRAFFIC BEARING DROP INLET
T.B.J.B.	TRAFFIC BEARING JUNCTION BOX
W.S.	WIDE SLOT

COMPUTED BY: MNG	DATE: 7/29/2021
CHECKED BY: AMC	DATE: 7/29/2021

(12-17-19)

STATE OF NORTH CAROLINA
DIVISION OF HIGHWAYS

PROJECT NO.	SHEET NO.
BP4.R005.1	3G-1

SUMMARY OF AGGREGATE SUBGRADE/STABILIZATION

LINE	Station	Station	Aggregate Type* ASU(1/2)/ AST	Aggregate Thickness INCHES [8" for ASU(2)]	Shallow Undercut CY	Class IV Subgrade Stabilization TONS	Geotextile for Soil Stabilization SY	Stabilizer Aggregate TONS	Class IV Aggregate Stabilization TONS
DWY 1	10+15.66	12+16.61			315	20	450		
DWY 2	10+10.00	12+02.68			305	20	430		
CONTINGENCY									
			TOTAL CY/TONS/SY:		620	40**	880**	0	0

***ASU(1/2) = Aggregate Subgrade (Type 1 or 2)**
***AST = Aggregate Stabilization**
****Total tons of "Class IV Subgrade Stabilization" and total square yards of "Geotextile for Soil Stabilization" are only the estimated quantities for ASU(1/2)/AST and may only represent a portion of the subgrade stabilization and geotextile quantities shown in the Item Sheets of the Proposal.**

DocuSign Envelope ID: E3C41C7B-6C37-4378-93EE-AA280C812EC9

8/17/99

-L-	-L-	-DWY1-	-DWY2-
PI Sta 16+63.63	PI Sta 18+68.18	PI Sta 11+87.55	PI Sta 10+46.65
△ = 11° 53' 01.1" (LT)	△ = 1° 04' 10.7" (LT)	△ = 82° 08' 58.5" (LT)	△ = 81° 47' 08.9" (LT)
D = 5° 45' 30.1"	D = 0° 31' 32.7"	D = 229° 10' 59.2"	D = 229° 10' 59.2"
L = 206.37'	L = 203.45'	L = 35.84'	L = 35.69'
T = 103.56'	T = 101.73'	T = 21.79'	T = 21.65'
R = 995.00'	R = 10,897.91'	R = 25.00'	R = 25.00'
e = 6%	e = Exist.	e = N/A	e = N/A
RUNOFF = 120'	RUNOFF = Exist.	RUNOFF = N/A	RUNOFF = N/A
DS = 50 MPH	DS = Exist.		

PROJECT REFERENCE NO.	SHEET NO.
BP4.R005.1	4
R/W SHEET NO.	

ROADWAY DESIGN ENGINEER: NORTH CAROLINA PROFESSIONAL SEAL 043767, 10/18/2021, JOHN M. CONGDON, DocuSigned by: 0DDCCF7FA8A8B7...

HYDRAULICS ENGINEER: NORTH CAROLINA PROFESSIONAL SEAL 040302, 10/19/2021, WILLIAM PRESTON LAWLER, JR., DocuSigned by: 434337529A6B4B3...

CDM Smith — CDM Smith Inc. 5400 Glenwood Avenue Suite 400 Raleigh, NC 27612-3228 NC CDA No. F-1255

MJ Engineering, PLLC. 1011 Schaub Drive Suite 100 Raleigh, NC 27606 NC CDA No. P-0671

DOCUMENT NOT CONSIDERED FINAL UNLESS ALL SIGNATURES COMPLETED

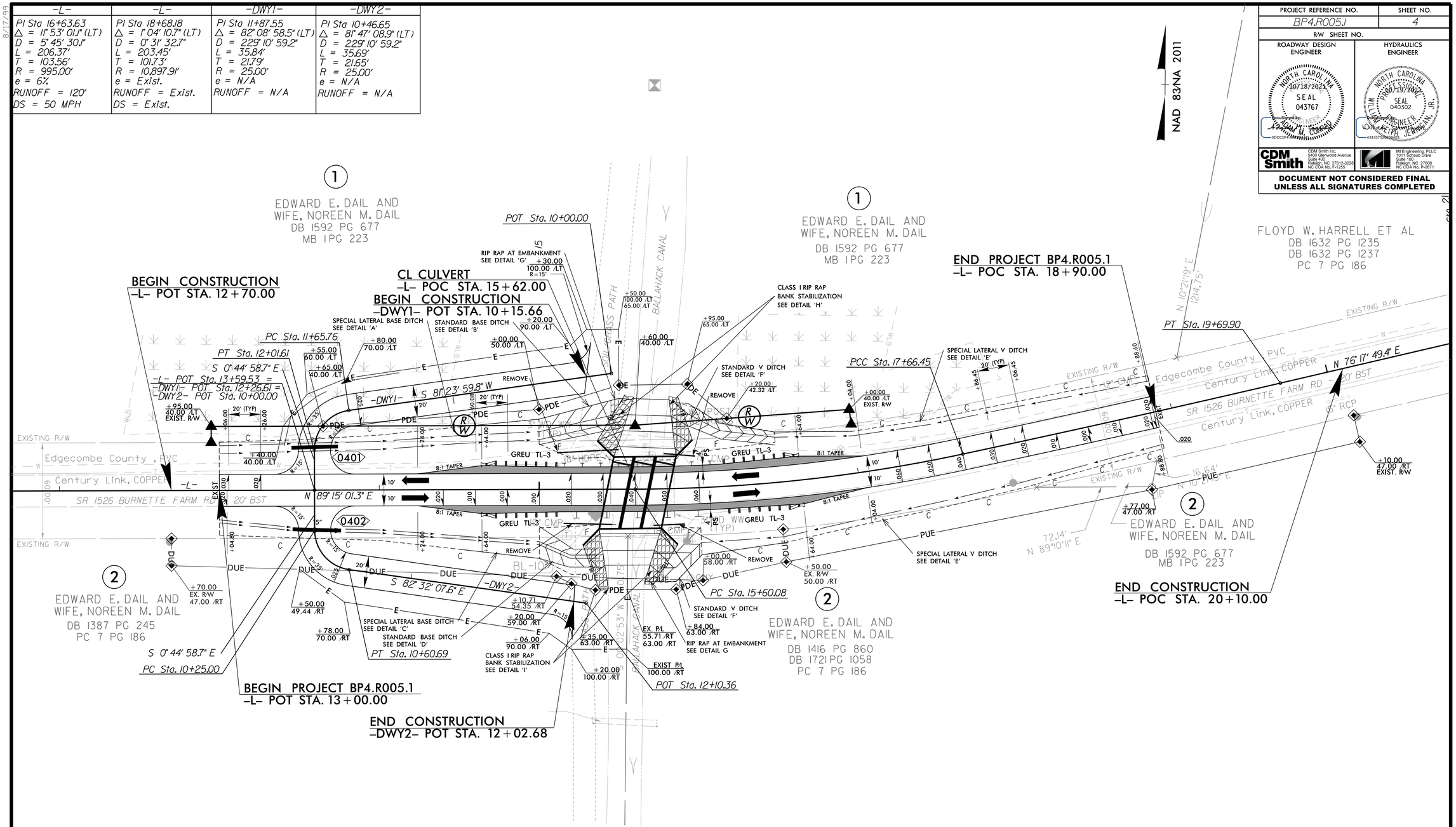

NOTE: SEE SHEET 5 FOR -L-, -DWY1-, AND -DWY2- PROFILE

-SYSTIME
-IS:\7BP.4.R.116_rdy_psh_04.dgn

DocuSign Envelope ID: E3C41C7B-6C37-4378-93EE-AA280C812EC9

5/28/99

PROJECT REFERENCE NO.	SHEET NO.
BP4.R005.I	5

ROADWAY DESIGN ENGINEER

NORTH CAROLINA PROFESSIONAL SEAL 043767 ENGINEER — 10/18/2021

DocuSigned by: Kathryn M. Conrad — 10/18/2021 6:06:07 PM EDT

CDM Smith — CDM Smith Inc. 5400 Glenwood Avenue Suite 400 Raleigh, NC 27612-3225 NC COA No. F-1255

HYDRAULICS ENGINEER

NORTH CAROLINA PROFESSIONAL SEAL 040302 ENGINEER — 10/19/2021

DocuSigned by: Kenneth Jerman Jr. — 10/19/2021 8:43:31 AM EDT

MI Engineering, PLLC 1011 Schaub Drive Raleigh, NC 27606 NC COA No. F-0671

DOCUMENT NOT CONSIDERED FINAL UNLESS ALL SIGNATURES COMPLETED

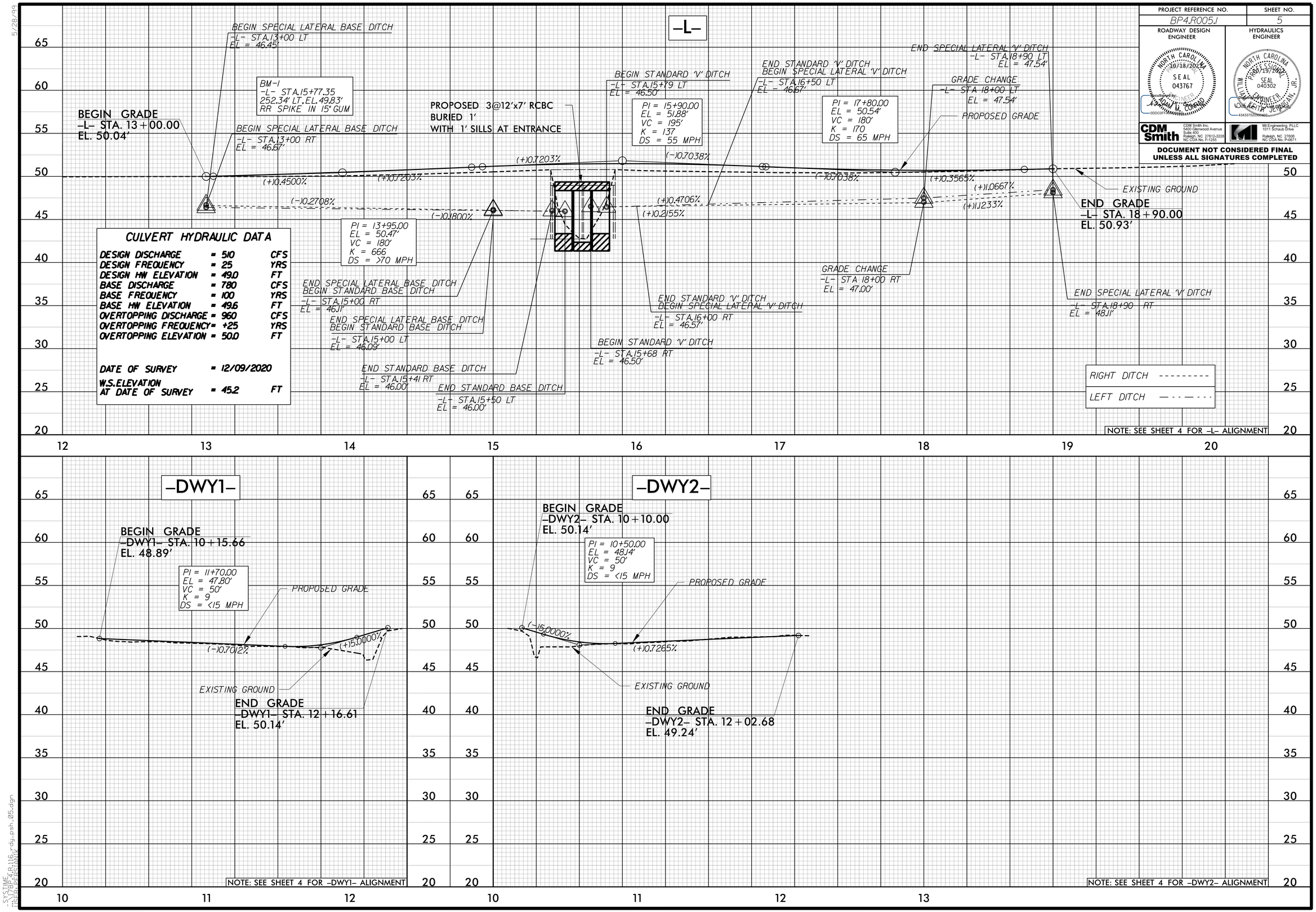

SYSTIME = 10/18/2021 11:17:16
USER = kdavis
FILE = BP4_R005_rdy_psh_05.dgn

DocuSign Envelope ID: C4AEB14A-A55F-46BA-8B8D-9F954CA24716

STATE OF NORTH CAROLINA
DIVISION OF HIGHWAYS

TRANSPORTATION MANAGEMENT PLAN

EDGECOMBE COUNTY

LOCATION: REPLACE BRIDGE NO. 320078 OVER BALLAHACK CANAL ON SR 1526 (BURNETTE FARM ROAD)

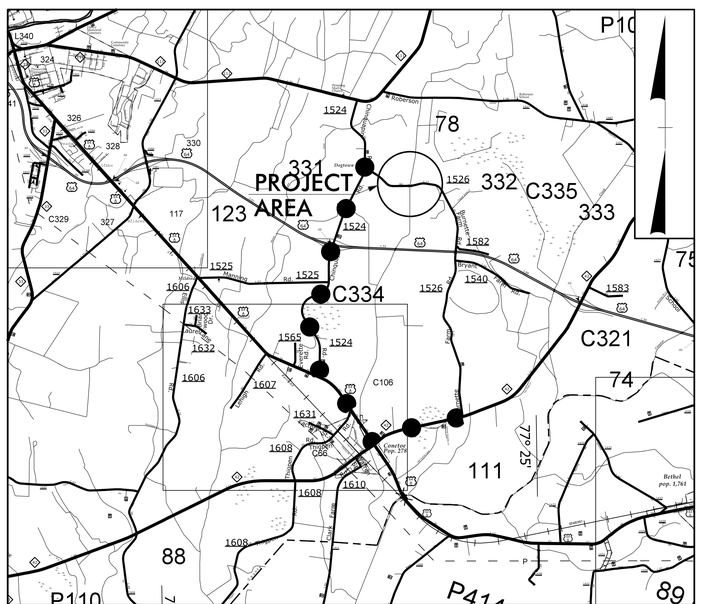

VICINITY MAP

DETOUR ROUTE ● ● ● ●

N. T. S.

INDEX OF SHEETS

SHEET NO.	TITLE
TMP-1	TITLE SHEET, VICINITY MAP, AND INDEX OF SHEETS
TMP-1A	LIST OF APPLICABLE ROADWAY STANDARD DRAWINGS, AND LEGEND
TMP-1B	TRANSPORTATION OPERATIONS PLAN: (MANAGEMENT STRATEGIES, GENERAL NOTES, AND LOCAL NOTES)
TMP-2	OFF-SITE DETOUR
TMP-3	SPECIAL SIGN DESIGN

SHEET NO.
TMP-1

PROJECT: BP4.R005.1

DOCUMENT NOT CONSIDERED FINAL UNLESS ALL SIGNATURES COMPLETED

WORK ZONE SAFETY & MOBILITY
"from the MOUNTAINS to the COAST"

PLANS PREPARED BY:

ADAM CONRAD, PE
PROJECT ENGINEER

MONIQUE GYANT, EI
PROJECT DESIGN ENGINEER

NCDOT CONTACTS:

DON PARKER, P.E.
PROJECT ENGINEER

SPENCER JENNINGS
PROJECT DESIGN ENGINEER

DIVISION OF HIGHWAYS · STATE OF NORTH CAROLINA · DEPARTMENT OF TRANSPORTATION · WORK ZONE TRAFFIC CONTROL

CDM Smith
CDM Smith Inc.
5400 Glenwood Avenue
Suite 400
Raleigh, NC 27612-3228
NC COA No. F-1255

APPROVED: DocuSigned by: Adam M. Conrad 0DDC0FFA0FD94AD...

DATE: 10/18/2021

SEAL

NORTH CAROLINA PROFESSIONAL SEAL 043767 ENGINEER ADAM M. CONRAD

9/8/2021
pw:\\cdmsmith-az02-pw.bentley.com:PW_PLN\Documents\117240\254936\10 Transportation\04 Client Folder Structure\7BP.4.R.116\Traffic\TrafficControl\TCP\BP4.R005.1_TMP_TC01.dgn
User:PERSIANK

DocuSign Envelope ID: C4AEB14A-A55F-46BA-8B8D-9F954CA24716

PROJ. REFERENCE NO.	SHEET NO.
BP4.R005.1	TMP-1A

ROADWAY STANDARD DRAWINGS

THE FOLLOWING ROADWAY STANDARDS AS SHOWN IN "ROADWAY STANDARD DRAWINGS" - N.C. DEPARTMENT OF TRANSPORTATION - RALEIGH, N.C., DATED JANUARY 2018 ARE APPLICABLE TO THIS PROJECT AND BY REFERENCE HEREBY ARE CONSIDERED A PART OF THESE PLANS:

STD. NO.	TITLE
1101.03	TEMPORARY ROAD CLOSURES
1101.11	TRAFFIC CONTROL DESIGN TABLES
1110.01	STATIONARY WORK ZONE SIGNS
1145.01	BARRICADES

LEGEND

GENERAL

- DIRECTION OF TRAFFIC FLOW
- DIRECTION OF PEDESTRIAN TRAFFIC FLOW
- EXIST. PVMT.
- NORTH ARROW
- PROPOSED PVMT.
- TEMP. SHORING (LOCATION PURPOSES ONLY)

SIGNALS

- EXISTING
- PROPOSED
- TEMPORARY

PAVEMENT MARKINGS

- EXISTING LINES
- TEMPORARY LINES

TRAFFIC CONTROL DEVICES

- BARRICADE (TYPE III)
- CONE
- DRUM
- SKINNY DRUM
- TUBULAR MARKER
- TEMPORARY CRASH CUSHION
- FLASHING ARROW BOARD
- FLAGGER
- LAW ENFORCEMENT
- TRUCK MOUNTED ATTENUATOR (TMA)
- CHANGEABLE MESSAGE SIGN

TEMPORARY SIGNING

- PORTABLE SIGN
- STATIONARY SIGN
- STATIONARY OR PORTABLE SIGN

PAVEMENT MARKERS

- CRYSTAL/CRYSTAL
- CRYSTAL/RED
- YELLOW/YELLOW

PAVEMENT MARKING SYMBOLS

- PAVEMENT MARKING SYMBOLS

CDM Smith
CDM Smith Inc.
5400 Glenwood Avenue
Suite 400
Raleigh, NC 27612-3228
NC COA No. F-1255

APPROVED: Adam M. Conrad
DocuSigned by:
0DDC0FFA0FD94AD...
DATE: 10/18/2021

SEAL

NORTH CAROLINA PROFESSIONAL SEAL 043767 ENGINEER ADAM M. CONRAD

DOCUMENT NOT CONSIDERED FINAL UNLESS ALL SIGNATURES COMPLETED

DIVISION OF HIGHWAYS · STATE OF NORTH CAROLINA · DEPARTMENT OF TRANSPORTATION · WORK ZONE TRAFFIC CONTROL

ROADWAY STANDARD DRAWINGS & LEGEND

9/8/2021
pw:\\cdmsmith-az02-pw.bentley.com:PW_PLN\Documents\117240\254936\10 Transportation\04 Client Folder Structure\17BP.4.R.16\Traffic\TrafficControl\TCP\BP4.R005.1_TMP_TC01A.dgn
User:PERSANK

DocuSign Envelope ID: C4AEB14A-A55F-46BA-8B8D-9F954CA24716

PROJ. REFERENCE NO.	SHEET NO.
BP4.R005.1	TMP-1B

MANAGEMENT STRATEGIES

1. CLOSE SR 1526 (BURNETTE FARM ROAD) TO TRAFFIC AND DETOUR TRAFFIC OFF-SITE.

2. LOCAL ACCESS TO ALL RESIDENCES AND BUSINESSES WILL BE MAINTAINED BETWEEN CLOSURE POINTS AT ALL TIMES DURING CONSTRUCTION.

GENERAL NOTES

CHANGES MAY BE REQUIRED WHEN PHYSICAL DIMENSIONS IN THE DETAIL DRAWINGS, STANDARD DETAILS, AND ROADWAY DETAILS ARE NOT ATTAINABLE TO MEET FIELD CONDITIONS OR RESULT IN DUPLICATE OR UNDESIRED OVERLAPPING OF DEVICES. MODIFICATION MAY INCLUDE: MOVING, SUPPLEMENTING, COVERING, OR REMOVAL OF DEVICES AS DIRECTED BY THE ENGINEER.

THE FOLLOWING GENERAL NOTES APPLY AT ALL TIMES FOR THE DURATION OF THE CONSTRUCTION PROJECT EXCEPT WHEN OTHERWISE NOTED IN THE PLAN OR DIRECTED BY THE ENGINEER.

TRAFFIC PATTERN ALTERATIONS

A) NOTIFY THE ENGINEER THIRTY (30) CALENDAR DAYS PRIOR TO ANY TRAFFIC PATTERN ALTERATION.

SIGNING

B) INSTALL ADVANCE WORK ZONE WARNING SIGNS WHEN WORK IS WITHIN 40 FT FROM THE EDGE OF TRAVEL LANE AND NO MORE THAN THREE (3) DAYS PRIOR TO THE BEGINNING OF CONSTRUCTION.

C) PROVIDE SIGNING AND DEVICES REQUIRED TO CLOSE THE ROAD ACCORDING TO THE ROADWAY STANDARD DRAWINGS AND TRAFFIC CONTROL PLANS.

PROVIDE SIGNING REQUIRED FOR THE OFF-SITE DETOUR ROUTE AS SHOWN IN THE TRAFFIC CONTROL PLANS.

D) COVER OR REMOVE ALL SIGNS AND DEVICES REQUIRED TO CLOSE THE ROAD WHEN ROAD CLOSURE IS NOT IN OPERATION.

COVER OR REMOVE ALL SIGNS REQUIRED FOR THE OFF-SITE DETOUR WHEN THE DETOUR IS NOT IN OPERATION.

E) ENSURE ALL NECESSARY SIGNING IS IN PLACE PRIOR TO ALTERING ANY TRAFFIC PATTERN.

TRAFFIC CONTROL DEVICES

F) PLACE TYPE III BARRICADES, WITH "ROAD CLOSED" SIGN R11-2 ATTACHED, OF SUFFICIENT LENGTH TO CLOSE ENTIRE ROADWAY.

PHASING

STEP 1: USING SHEET TMP-2 AND RSD 1101.03 (SHEET 1 OF 9), INSTALL DETOUR ROUTE SIGNING TO CLOSE SR 1526 (BURNETTE FARM ROAD) ON PROPOSED -L- FROM STA. 12+70+/- TO STA. 20+10+/-.

STEP 2: AWAY FROM TRAFFIC, COMPLETE CONSTRUCTION OF PROPOSED CULVERT AND ROADWAY APPROACHES, INCLUDING DRAINAGE, GUARDRAIL, FINAL PAVEMENT MARKINGS AND MARKERS ON PROPOSED -L- FROM STA. 12+70+/- TO STA. 20+10+/-.

STEP 3: REMOVE TEMPORARY TRAFFIC CONTROL DEVICES AND OPEN -L- TO PROPOSED 2-LANE, 2-WAY TRAFFIC PATTERN.

LOCAL NOTES

1. NOTIFY EDGECOMBE COUNTY EMERGENCY SERVICES AND PUBLIC SCHOOLS AT LEAST ONE MONTH PRIOR TO ROAD CLOSURE.

CDM Smith
CDM Smith Inc.
5400 Glenwood Avenue
Suite 400
Raleigh, NC 27612-3228
NC COA No. F-1255

APPROVED: DocuSigned by: Adam M. Conrad 0DDC0FFA0FD94AD...
DATE: 10/18/2021
SEAL

NORTH CAROLINA PROFESSIONAL SEAL 043767 ENGINEER ADAM M. CONRAD

DOCUMENT NOT CONSIDERED FINAL UNLESS ALL SIGNATURES COMPLETED

DIVISION OF HIGHWAYS · STATE OF NORTH CAROLINA · DEPARTMENT OF TRANSPORTATION · WORK ZONE TRAFFIC CONTROL

TRANSPORTATION OPERATIONS PLAN

9/8/2021
pw:\\cdmsmith-az02-pw.bentley.com:PW_PLN\Documents\117240\254936\10 Transportation\04 Client Folder Structure\17BP.4.R.16\Traffic\TrafficControl\TCP\BP4.R005.1_TMP_TC01B.dgn
User:PERSANK

DocuSign Envelope ID: C4AEB14A-A55F-46BA-8B8D-9F954CA24716

PROJ. REFERENCE NO.	SHEET NO.
BP4.R005.1	TMP-2

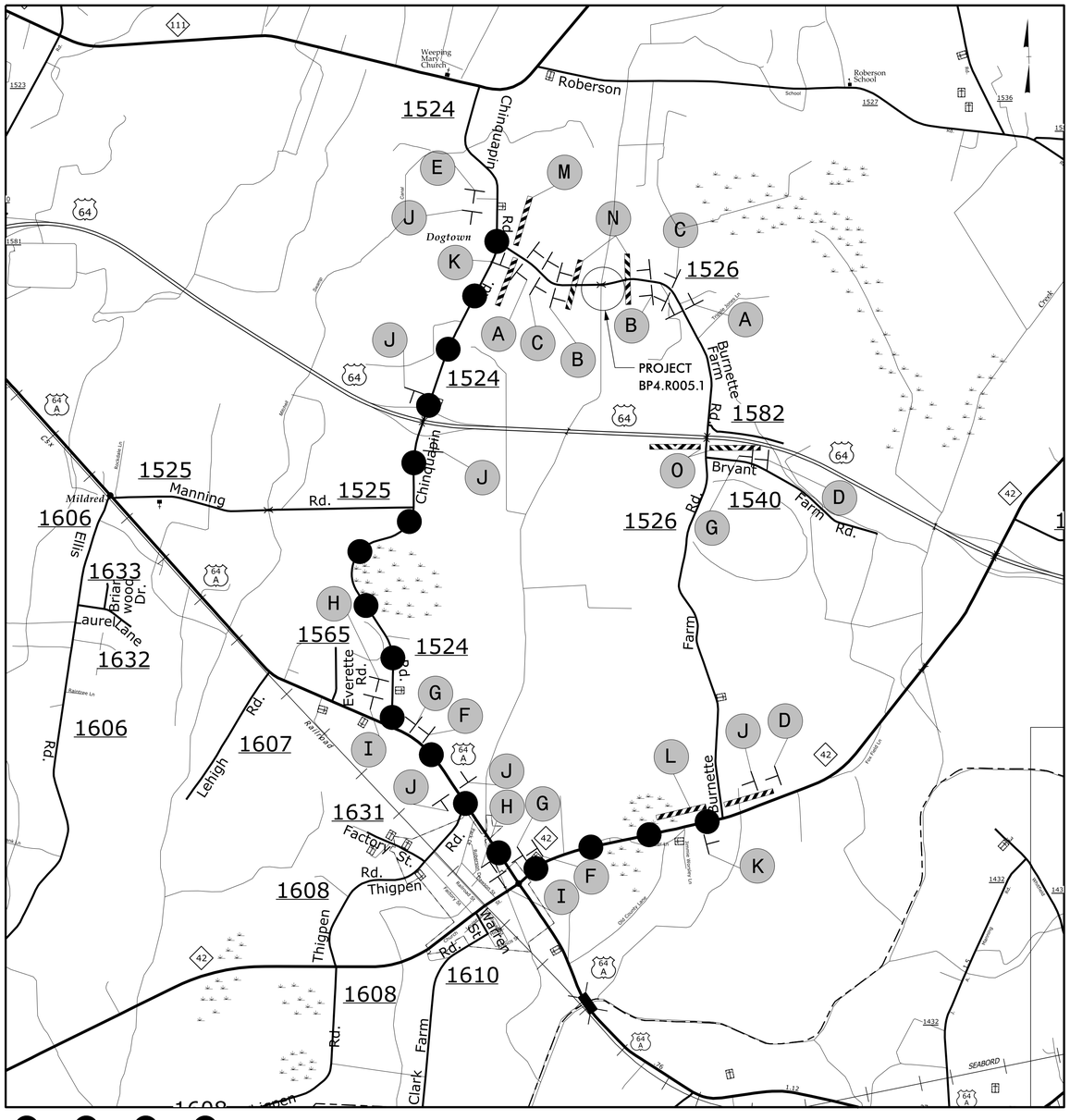

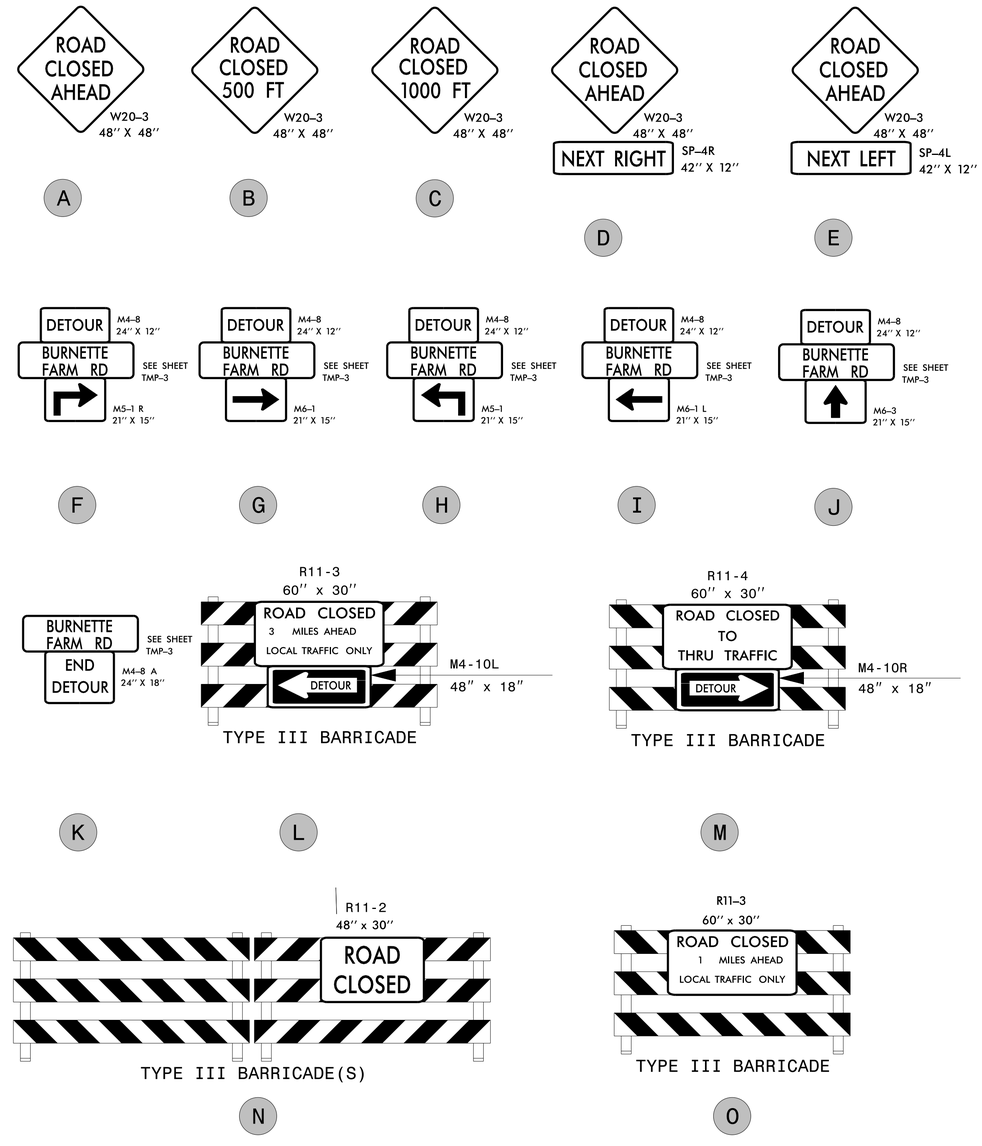

CDM Smith

CDM Smith Inc.
5400 Glenwood Avenue
Suite 400
Raleigh, NC 27612-3228
NC COA No. F-1255

APPROVED: DocuSigned by: Adam M. Conrad
DDDC0FFA0FD94AD...
DATE: 10/18/2021

SEAL

NORTH CAROLINA PROFESSIONAL SEAL 043767 ENGINEER ADAM M. CONRAD

DOCUMENT NOT CONSIDERED FINAL UNLESS ALL SIGNATURES COMPLETED

DIVISION OF HIGHWAYS
STATE OF NORTH CAROLINA
DEPARTMENT OF TRANSPORTATION
WORK ZONE TRAFFIC CONTROL

OFF-SITE DETOUR

9/8/2021
pw:\\cdmsmith-a202-pw.bentley.com:PW_PLN\Documents\117240\254936\10 Transportation\04 Client Folder Structure\17BP.4.R.116\Traffic\TrafficControl\TCP\BP4.R005.1_TMP_TC02.dgn
User-PERSIANK

DocuSign Envelope ID: C4AEB14A-A55F-46BA-8B8D-9F954CA24716

PROJ. REFERENCE NO.	SHEET NO.
BP4.R005.1	TMP-3

SIGN NUMBER: BURNETTE FARM BACKG COLOR: Fluorescent Orange
TYPE: STATIONARY COPY COLOR: Black
QUANTITY: SEE PLANS

SYMBOL	X	Y	WID	HT

SIGN WIDTH: 4′-6″
HEIGHT: 1′-0″
TOTAL AREA: ′.5 Sq.Ft.

BORDER TYPE: INSET
RECESS: 0.38″
WIDTH: 0.63″
RADII: 1.5″

MAT′L: 0.080″ (2.0 mm) ALUMINUM

NO. Z BARS:
LENGTH:

DESIGN BY: JAB CHECKED BY: AMC June 18, 2021
PROJECT ID:BP4.R005.1 LOCATION: EDGECOMBE DIV: 4

USE NOTES: 1,2

1. Legend and border shall be direct applied black non-reflective sheeting.
2. Background shall be NC GRADE B fluorescent orange retroreflective sheeting.

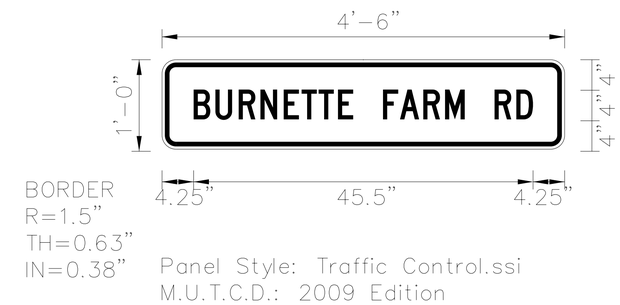

Spacing Factor is 1 unless specified otherwise

LETTER POSITIONS

Letter locations are panel edge to lower left corner

	B	U	R	N	E	T	T	E		F	A	R	M		R	D												Series/Size Text Length
	4.2	7.2	10.3	13.2	16.3	18.7	21	23.6	25.6	29.6	31.9	35	38	40.6	44.6	47.5												C 2000 45.5

FILENAME: BP4.R005.1_TMP_TC03

NORTH CAROLINA D.O.T. SIGN DETAIL

CDM Smith
CDM Smith Inc.
5400 Glenwood Avenue
Suite 400
Raleigh, NC 27612-3228
NC COA No. F-1255

APPROVED: DocuSigned by: Adam M. Conrad DDDC0FFA0FD94AD...
DATE: 10/18/2021
SEAL
NORTH CAROLINA PROFESSIONAL SEAL 043767 ENGINEER ADAM M. CONRAD

DOCUMENT NOT CONSIDERED FINAL UNLESS ALL SIGNATURES COMPLETED

DIVISION OF HIGHWAYS STATE OF NORTH CAROLINA DEPARTMENT OF TRANSPORTATION WORK ZONE TRAFFIC CONTROL

SPECIAL SIGN DESIGN

9/8/2021
pw:\\cdmsmith-az02-pw.bentley.com:PW_PL\Documents\117240\254936\10 Transportation\04 Client Folder Structure\17BP.4.R.116\Traffic\TrafficControl\TCP\BP4.R005.1_TMP_TC03.dgn
User:PERSANIK

DocuSign Envelope ID: C4AEB14A-A55F-46BA-8B8D-9F954CA24716

PROJECT: BP4.R005.1

TIP NO.	SHEET NO.
BP4.R005.1	PMP-1

APPROVED: DocuSigned by: Adam M. Conrad 0DDC0FFA0FD94AD...

DATE: 10/18/2021

SEAL

NORTH CAROLINA PROFESSIONAL SEAL 043767 ENGINEER ADAM M. CONRAD

DOCUMENT NOT CONSIDERED FINAL UNLESS ALL SIGNATURES COMPLETED

STATE OF NORTH CAROLINA
DEPARTMENT OF TRANSPORTATION

PAVEMENT MARKING PLAN

EDGECOMBE COUNTY

LOCATION: REPLACE BRIDGE NO. 320078 OVER BALLAHACK CANAL ON SR 1526 (BURNETTE FARM ROAD)

ROADWAY STANDARD DRAWING

THE FOLLOWING ROADWAY STANDARDS AS APPEAR IN "ROADWAY STANDARD DRAWINGS" - PROJECT SERVICES UNIT - N.C. DEPARTMENT OF TRANSPORTATION - RALEIGH, N.C., DATED JANUARY 2018 ARE APPLICABLE TO THIS PROJECT AND BY REFERENCE HEREBY ARE CONSIDERED A PART OF THESE PLANS:

STD. NO.	TITLE
1205.01	PAVEMENT MARKINGS - LINE TYPES AND OFFSETS
1205.02	PAVEMENT MARKINGS - TWO-LANE AND MULTI-LANE ROADWAYS
1261.01	GUARDRAIL AND BARRIER DELINEATORS - INSTALLATION SPACING
1261.02	GUARDRAIL AND BARRIER DELINEATORS - TYPES AND MOUNTING
1262.02	GUARDRAIL END DELINEATION

GENERAL NOTES

THE FOLLOWING GENERAL NOTES APPLY AT ALL TIMES FOR THE DURATION OF THE CONSTRUCTION PROJECT, EXCEPT WHEN OTHERWISE NOTED IN THE PLAN, OR DIRECTED BY THE ENGINEER.

A) INSTALL PAVEMENT MARKINGS AND PAVEMENT MARKERS ON THE FINAL SURFACE AS FOLLOWS:

ROAD NAME	MARKING	MARKER
SR 1526 -L-	HOT SPRAY THERMOPLASTIC	NONE

B) TIE PROPOSED PAVEMENT MARKING LINES TO EXISTING PAVEMENT MARKING LINES.

C) REMOVE /REPLACE ANY CONFLICTING /DAMAGED PAVEMENT MARKINGS AND MARKERS.

D) PASSING ZONES WILL BE DETERMINED IN THE FIELD AND MUST BE APPROVED BY THE ENGINEER.

SUMMARY OF QUANTITIES

ITEM NO.		ITEM DESCRIPTION	QUANTITY	UNIT
DESC. NO.	SECT. NO.			
4890000000-E	SP	GENERIC PAVEMENT MARKING ITEM	2,360	L.F.

INDEX

SHEET NO.	DESCRIPTION
PMP-1	PAVEMENT MARKING PLAN TITLE SHEET
PMP-2	PAVEMENT MARKING DETAIL

PLAN PREPARED BY: CDM SMITH, INC.

ADAM CONRAD, P.E. — PROJECT MANAGER

JACOB BOESCH, E.I. — PROJECT DESIGN ENGINEER

CDM Smith
CDM Smith Inc.
5400 Glenwood Avenue
Suite 400
Raleigh, NC 27612-3228
NC COA No. F-1255

PLAN REVIEWED BY: N.C.D.O.T. DIVISION 4

ANDY BROWN, P.E. — DIVISION TRAFFIC ENGINEER

COREY MCLAMB, P.E. — DIVISION CONSTRUCTION ENGINEER

STATE OF NORTH CAROLINA DEPARTMENT OF TRANSPORTATION

9/8/2021
pw:\\cdmsmith-pa02-pw.bentley.com:PW_PL1\Documents\117240\254936\10 Transportation\04 Client Folder Structure\17BP.4.R.116\Traffic\Signing\CADD\17BP.4.R.116_TMP_PMP_01.dgn
bespeck@cdm

DocuSign Envelope ID: C4AEB14A-A55F-46BA-8B8D-9F954CA24716

TIP NO.	SHEET NO.
BP4.R005.I	PMP-2

APPROVED: DocuSigned by: Adam M. Conrad — 0DDC0FFAGFD94AD...

DATE: 10/18/2021

SEAL

NORTH CAROLINA PROFESSIONAL SEAL 043767 ENGINEER ADAM M. CONRAD

DOCUMENT NOT CONSIDERED FINAL UNLESS ALL SIGNATURES COMPLETED

CDM Smith
CDM Smith Inc.
5400 Glenwood Avenue
Suite 400
Raleigh, NC 27612-3228
NC COA No. F-1255

PAVEMENT MARKING SCHEDULE

SYMBOL	DESCRIPTION
	HOT SPRAY THERMO (4", 50 MILS)
T1	WHITE EDGELINE
T13	YELLOW DOUBLE CENTER

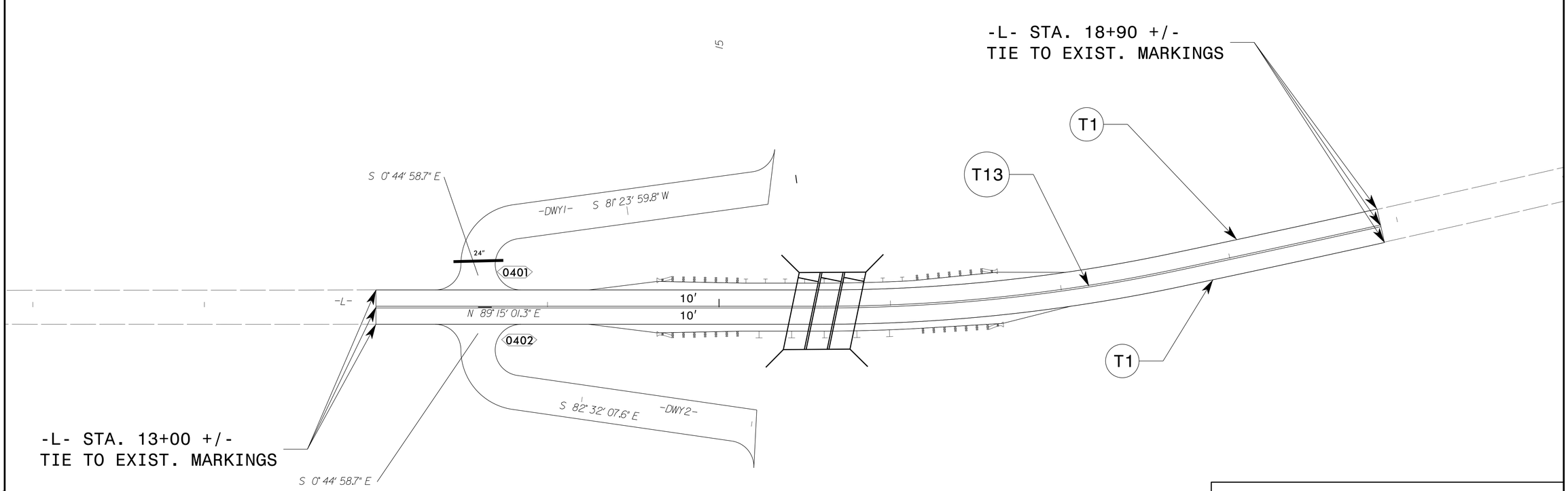

PAVEMENT MARKING DETAIL

9/8/2021
Pw:\\cdmsmith-oa02-pw.bentley.com:PW_PL1\Documents\117240\254936\10 Transportation\04 Client Folder Structure\17BP.4.R.116\Traffic\Signing\CADD\17BP.4.R.116_TMP_PMP_02.dgn
bergersjmk

PROJECT: BP4.R005.1

STATE OF NORTH CAROLINA
DIVISION OF HIGHWAYS

PLAN FOR PROPOSED
HIGHWAY EROSION CONTROL

EDGECOMBE COUNTY

STATE	STATE PROJECT REFERENCE NO.	SHEET NO.	TOTAL SHEETS
N.C.	BP4.R005.1	EC-1	

STATE PROJ. NO.	F. A. PROJ. NO.	DESCRIPTION

LOCATION: REPLACE BRIDGE NO. 320078 OVER BALLAHACK CANAL ON SR 1526 (BURNETTE FARM ROAD)

TYPE OF WORK: GRADING, DRAINAGE, PAVING AND CULVERT

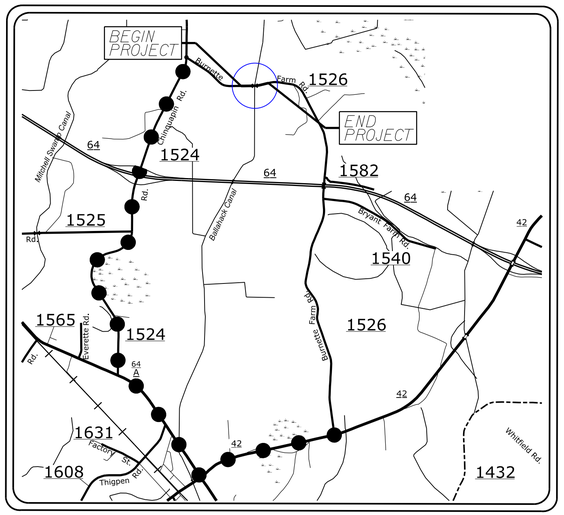

VICINITY MAP
DETOUR ROUTE
N.T.S.

EROSION AND SEDIMENT CONTROL MEASURES

Std. #	Description	Symbol
1630.03	Temporary Silt Ditch	TSD
1630.05	Temporary Diversion	TD
1605.01	Temporary Silt Fence	
1606.01	Special Sediment Control Fence	
1622.01	Temporary Berms and Slope Drains	
1630.02	Silt Basin Type B	
1633.01	Temporary Rock Silt Check Type-A	
	Temporary Rock Silt Check Type-A with Matting and Polyacrylamide (PAM)	
1633.02	Temporary Rock Silt Check Type-B	
	Wattle/ Coir Fiber Wattle	SW CFW
	Wattle/ Coir Fiber Wattle with Polyacrylamide (PAM)	

NAD 83/ NA 2011

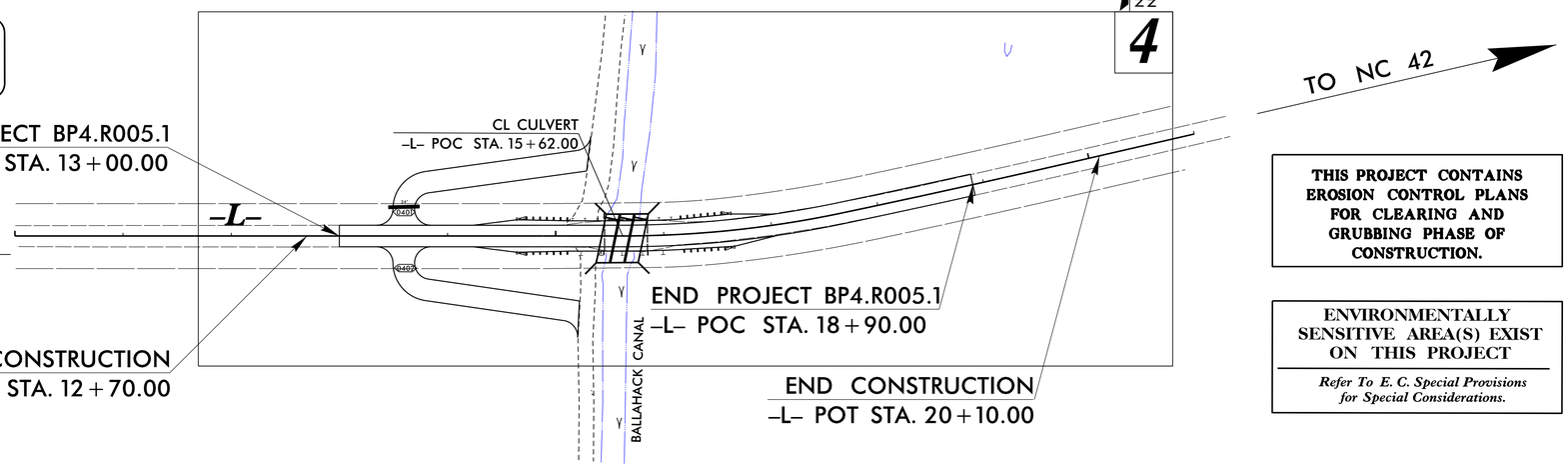

THIS PROJECT CONTAINS EROSION CONTROL PLANS FOR CLEARING AND GRUBBING PHASE OF CONSTRUCTION.

ENVIRONMENTALLY SENSITIVE AREA(S) EXIST ON THIS PROJECT

Refer To E. C. Special Provisions for Special Considerations.

1634.01	Temporary Rock Sediment Dam Type-A	
1634.02	Temporary Rock Sediment Dam Type-B	
1635.01	Rock Pipe Inlet Sediment Trap Type-A	
1635.02	Rock Pipe Inlet Sediment Trap Type-B	
1630.04	Stilling Basin	
1630.06	Special Stilling Basin	
	Rock Inlet Sediment Trap:	
1632.01	Type A	A
1632.02	Type B	B
1632.03	Type C	C
	Skimmer Basin	
	Tiered Skimmer Basin	
	Infiltration Basin	

THIS PROJECT IS NOT WITHIN A MUNICIPAL BOUNDARY.

CLEARING ON THIS PROJECT SHALL BE PERFORMED TO THE LIMITS ESTABLISHED BY METHOD II.

GRAPHIC SCALE

50 25 0 50 100

THESE EROSION AND SEDIMENT CONTROL PLANS COMPLY WITH THE APPLICABLE REGULATIONS SET FORTH BY THE NCG-010000 GENERAL CONSTRUCTION PERMIT EFFECTIVE APRIL 1, 2019 AND ISSUED BY THE NORTH CAROLINA DEPARTMENT OF ENVIRONMENTAL QUALITY DIVISION OF WATER RESOURCES.

MI ENGINEERING, LLC
1011 SCHAUB DR, SUITE 100
RALEIGH, NC 27606
(919) 851-6606

Prepared In the Office of:
MI ENGINEERING, LLC
1011 SCHAUB DR, SUITE 100
RALEIGH, NC 27606

Designed by:
KAREN HEFNER, PE ***3428***
NAME *LEVEL III CERTIFICATION NO.*

Roadway Standard Drawings

The following roadway english standards as appear in "Roadway Standard Drawings"- Roadway Design Unit - N.C. Department of Transportation - Raleigh, N.C., dated January 2018 and the latest revison thereto are applicable to this project and by reference hereby are considered a part of these plans.

1604.01	Railroad Erosion Control Detail	1632.01	Rock Inlet Sediment Trap Type A
1605.01	Temporary Silt Fence	1632.02	Rock Inlet Sediment Trap Type B
1606.01	Special Sediment Control Fence	1632.03	Rock Inlet Sediment Trap Type C
1607.01	Gravel Construction Entrance	1633.01	Temporary Rock Silt Check Type A
1622.01	Temporary Berms and Slope Drains	1633.02	Temporary Rock Silt Check Type B
1630.01	Riser Basin	1634.01	Temporary Rock Sediment Dam Type A
1630.02	Silt Basin Type B	1634.02	Temporary Rock Sediment Dam Type B
1630.03	Temporary Silt Ditch	1635.01	Rock Pipe Inlet Sediment Trap Type A
1630.04	Stilling Basin	1635.02	Rock Pipe Inlet Sediment Trap Type B
1630.05	Temporary Diversion	1640.01	Coir Fiber Baffle
1630.06	Special Stilling Basin	1645.01	Temporary Stream Crossing
1631.01	Matting Installation		

30-FEB-2018 14:41
BP4_R005_EC_01.dgn
$$$$USERNAME$$$$
pw:\\pwdc01.bentley.com:PWDC01\Projects01\DOT\Edgecombe 78\Erosion Control\CADD\178P-4.R.116.EC_tsh.dgn

PROJECT REFERENCE NO.	SHEET NO.
BP4.R005.1	EC-2G
R/W SHEET NO.	
ROADWAY DESIGN ENGINEER	HYDRAULICS ENGINEER

COIR FIBER WATTLE WITH POLYACRYLAMIDE (PAM) DETAIL

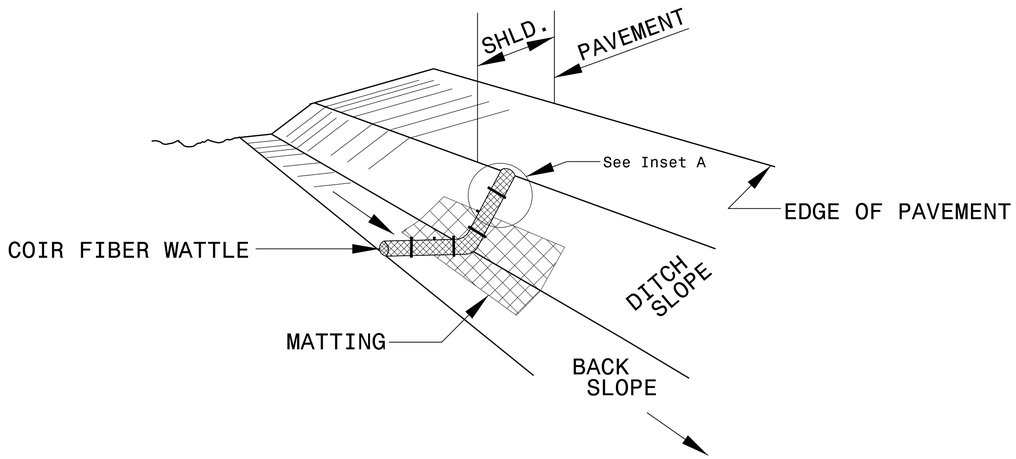

ISOMETRIC VIEW

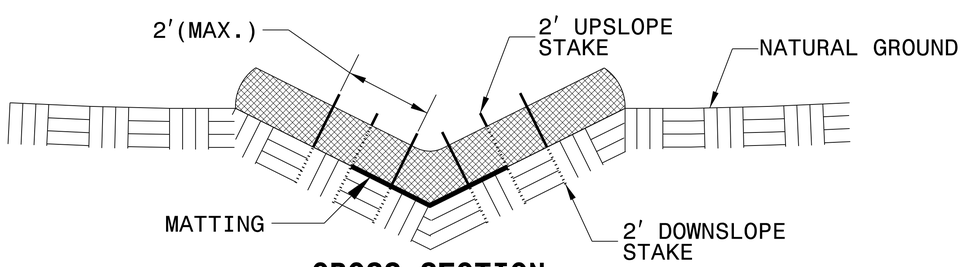

CROSS SECTION VEE DITCH

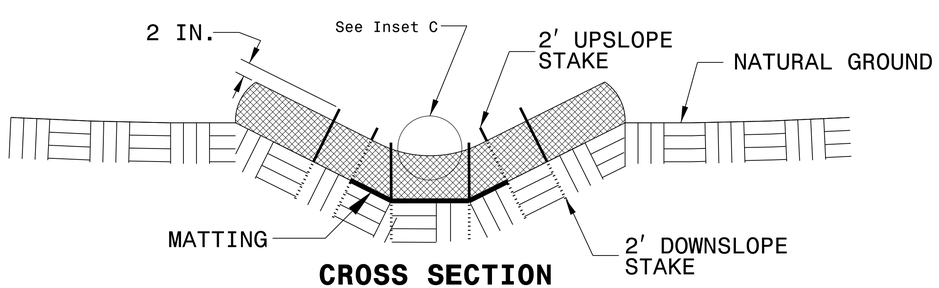

CROSS SECTION TRAPEZOIDAL DITCH

NOTES:

USE MINIMUM 12 IN. DIAMETER COIR FIBER (COCONUT FIBER) WATTLE.

USE 2 FT. WOODEN STAKES WITH A 2 IN. BY 2 IN. NOMINAL CROSS SECTION.

ONLY INSTALL WATTLE(S) TO A HEIGHT IN DITCH SO FLOW WILL NOT WASH AROUND WATTLE AND SCOUR DITCH SLOPES AND AS DIRECTED.

INSTALL A MINIMUM OF 2 UPSLOPE STAKES AND 4 DOWNSLOPE STAKES AT AN ANGLE TO WEDGE WATTLE TO BOTTOM OF DITCH.

PROVIDE STAPLES MADE OF 0.125 IN. DIAMETER STEEL WIRE FORMED INTO A U SHAPE NOT LESS THAN 12″ IN LENGTH.

INSTALL STAPLES APPROXIMATELY EVERY 1 LINEAR FOOT ON BOTH SIDES OF WATTLE AND AT EACH END TO SECURE IT TO THE SOIL.

INSTALL MATTING IN ACCORDANCE WITH SECTION 1631 OF THE STANDARD SPECIFICATIONS.

PRIOR TO POLYACRYLAMIDE (PAM) APPLICATION, OBTAIN A SOIL SAMPLE FROM PROJECT LOCATION, AND FROM OFFSITE MATERIAL, AND ANALYZE FOR APPROPRIATE PAM FLOCCULANT TO BE APPLIED TO EACH WATTLE.

INITIALLY APPLY 2 OUNCES OF ANIONIC OR NEUTRALLY CHARGED PAM OVER WATTLE WHERE WATER WILL FLOW AND 1 OUNCE OF PAM ON MATTING ON EACH SIDE OF WATTLE. REAPPLY PAM AFTER EVERY RAINFALL EVENT THAT IS EQUAL TO OR EXCEEDS 0.50 IN.

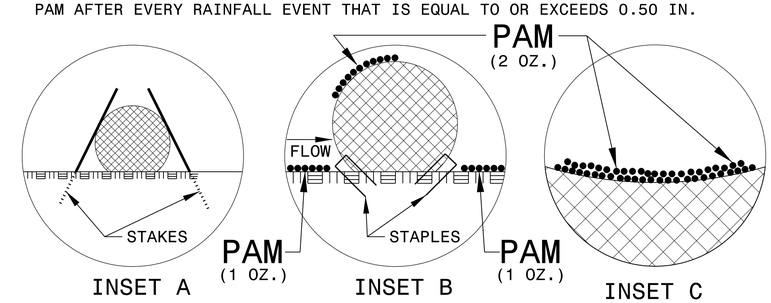

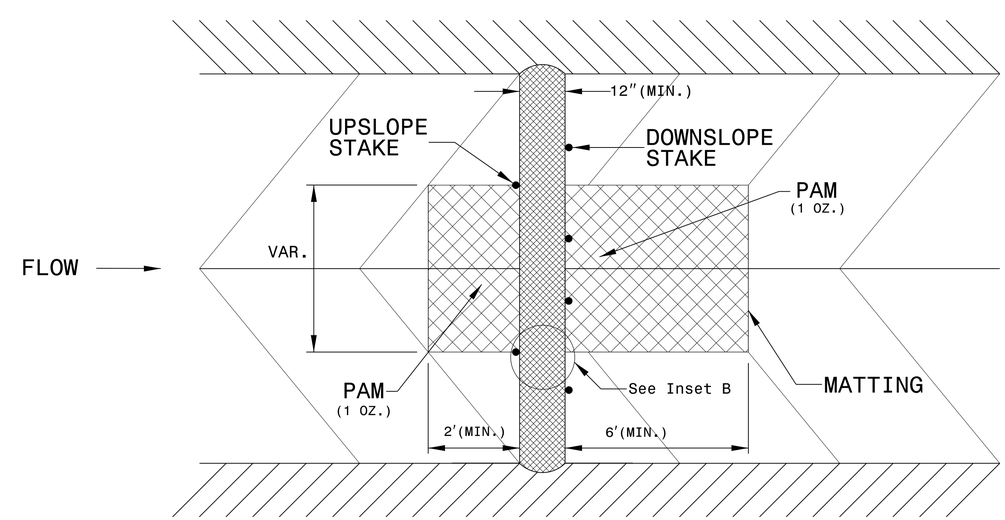

TOP VIEW

PROJECT REFERENCE NO.	SHEET NO.
BP4.R005J	EC-03
ROADWAY DESIGN ENGINEER	HYDRAULICS ENGINEER

DIVISION OF HIGHWAYS
STATE OF NORTH CAROLINA

SOIL STABILIZATION SUMMARY SHEET

MATTING FOR EROSION CONTROL

CONST SHEET NO.	LINE	FROM STATION	TO STATION	SIDE	ESTIMATE (SY)
4	-L-	13+00	15+50	LT.	490
4	-L-	18+00	18+90	LT.	130
4	-L-	18+00	18+90	RT.	130
				SUBTOTAL	750
MISCELLANEOUS MATTING TO BE INSTALLED AS DIRECTED BY THE ENGINEER					1375
				TOTAL	2125
				SAY	2150

MATTING FOR EROSION CONTROL

CONST SHEET NO.	LINE	FROM STATION	TO STATION	SIDE	ESTIMATE (SY)

PROJECT REFERENCE NO.	SHEET NO.
BP4.R005.1	EC-3B
ROADWAY DESIGN ENGINEER	HYDRAULICS ENGINEER

DIVISION OF HIGHWAYS
STATE OF NORTH CAROLINA

SOIL STABILIZATION TIMEFRAMES

SITE DESCRIPTION	STABILIZATION TIME	TIMEFRAME EXCEPTIONS
PERIMETER DIKES, SWALES, DITCHES AND SLOPES	7 DAYS	NONE
HIGH QUALITY WATER (HQW) ZONES	7 DAYS	NONE
SLOPES STEEPER THAN 3:1	7 DAYS	IF SLOPES ARE 10' OR LESS IN LENGTH AND ARE NOT STEEPER THAN 2:1, 14 DAYS ARE ALLOWED.
SLOPES 3:1 OR FLATTER	14 DAYS	7 DAYS FOR SLOPES GREATER THAN 50' IN LENGTH.
ALL OTHER AREAS WITH SLOPES FLATTER THAN 4:1	14 DAYS	NONE, EXCEPT FOR PERIMETERS AND HQW ZONES.

PROJECT REFERENCE NO.	SHEET NO.
BP4.R005.1	EC-04/CONST.04
R/W SHEET NO.	
ROADWAY DESIGN ENGINEER	HYDRAULICS ENGINEER
CDM Smith Inc. 5400 Glenwood Avenue Suite 400 Raleigh, NC 27612-3228 NC CDA No. F-1255	MI Engineering, PLLC 1011 Schaub Drive Suite 100 Raleigh, NC 27606 NC CDA No. P-0571

-L-	-L-
PI Sta 16+63.63	PI Sta 18+68.18
△ = 11° 53' 01.1" (LT)	△ = 1° 04' 10.7" (LT)
D = 5° 45' 30.1"	D = 0° 31' 32.7"
L = 206.37'	L = 203.45'
T = 103.56'	T = 101.73'
R = 995.00'	R = 10,897.91'
e = 6%	e = Exist.
RUNOFF = 120'	RUNOFF = Exist.
DS = 50 MPH	DS = Exist.

NOTE:
PLACE TEMPORARY ROCK SEDIMENT DAMS TYPE – B AND TEMPORARY ROCK SILT CHECKS TYPE – A AT DRAINAGE OUTLETS.

CLEARING AND GRUBBING EROSION CONTROL FOR CONSTRUCTION SHEET _04_

ENVIRONMENTALLY SENSITIVE AREA
SEE PROJECT SPECIAL PROVISIONS

BEGIN CONSTRUCTION
-L- POT STA. 12+70.00

BEGIN PROJECT BP4.R005.1
-L- POT STA. 13+00.00

END PROJECT BP4.R005.1
-L- POC STA. 18+90.00

END CONSTRUCTION
-L- POC STA. 20+10.00

CL CULVERT
-L- POC STA. 15+62.00

EDWARD E. DAIL AND WIFE, NOREEN M. DAIL
DB 1592 PG 677
MB 1PG 223

EDWARD E. DAIL AND WIFE, NOREEN M. DAIL
DB 1387 PG 245
PC 7 PG 186

EDWARD E. DAIL AND WIFE, NOREEN M. DAIL
DB 1416 PG 860
PC 7 PG 186

PROP INCIDENTAL STONE DRIVEWAY

CULTIVATED FIELD

EXISTING R/W

Edgecombe County, PVC

Century Link, COPPER

SR 1526 BURNETTE FARM RD 20' BST

N 89°15' 01.3" E

N 76° 17' 49.4" E

N 10°21'19" E 1214.75'

N 10°21'19" E 16.64'

N 89°10'11" E 254.4'

PCC Sta. 17+66.45

PC Sta. 15+60.08

PT Sta. 19+69.90

L SAG STA. 18+09.48

L CREST STA. 15+91.13

BALLAHACK CANAL

NAD 83/NA 2011

NOTE:
PERIMETER EROSION CONTROL MEASURES SHALL BE INSTALLED DURING CLEARING AND GRUBBING PHASE.

30' 15' 0' 30' 60'
PLANS

BEGIN GRADE
-L- STA. 13+00.00
EL. 50.04'

END GRADE
-L- STA. 18+90.00
EL. 50.93'

BM-1
-L- STA.15+77.35
252.34' LT, EL. 49.83'
RR SPIKE IN 15" GUM

BEGIN SPECIAL LATERAL BASE DITCH
-L- STA.13+00 LT
EL = 46.45'

BEGIN SPECIAL LATERAL BASE DITCH
-L- STA.13+00 RT
EL = 46.67'

PROPOSED 3@12'x7' RCBC
BURIED 1'
WITH 1' SILL ON CENTER
AND 2' SILLS ON OUTISIDES

BEGIN STANDARD 'V' DITCH
-L- STA.15+79 LT
EL = 46.50'

END STANDARD 'V' DITCH
BEGIN SPECIAL LATERAL 'V' DITCH
-L- STA.16+50 LT
EL = 46.67'

GRADE CHANGE
-L- STA 18+00 LT
EL = 47.54'

END SPECIAL LATERAL 'V' DITCH
-L- STA.18+90 LT
EL = 47.54'

PI = 15+90.00
EL = 51.88'
VC = 195'
K = 137
DS = 55 MPH

PI = 17+80.00
EL = 50.54'
VC = 180'
K = 170
DS = 65 MPH

PROPOSED GRADE

(+)0.7203%
(-)0.7038%
(+)0.4500%
(-)0.2708%
(-)0.1800%
(+)0.4706%
(+)0.2155%
(+)0.3565%
(+)1.0667%
(+)1.1233%

PI = 13+95.00
EL = 50.47'
VC = 180'
K = 666
DS = >70 MPH

EXISTING GROUND

GRADE CHANGE
-L- STA 18+00 RT
EL = 47.00'

END SPECIAL LATERAL 'V' DITCH
-L- STA.18+90 RT
EL = 48.11'

END SPECIAL LATERAL BASE DITCH
BEGIN STANDARD BASE DITCH
-L- STA.15+00 RT
EL = 46.11'

END SPECIAL LATERAL BASE DITCH
BEGIN STANDARD BASE DITCH
-L- STA.15+00 LT
EL = 46.09'

END STANDARD 'V' DITCH
BEGIN SPECIAL LATERAL 'V' DITCH
-L- STA.16+00 RT
EL = 46.57'

BEGIN STANDARD 'V' DITCH
-L- STA.15+68 RT
EL = 46.50'

END STANDARD BASE DITCH
-L- STA.15+41 RT
EL = 46.00'

END STANDARD BASE DITCH
-L- STA.15+50 LT
EL = 46.00'

RIGHT DITCH
LEFT DITCH

CULVERT HYDRAULIC DATA

DESIGN DISCHARGE	= 510	CFS
DESIGN FREQUENCY	= 25	YRS
DESIGN HW ELEVATION	= 49.0	FT
BASE DISCHARGE	= 780	CFS
BASE FREQUENCY	= 100	YRS
BASE HW ELEVATION	= 49.6	FT
OVERTOPPING DISCHARGE	= 960	CFS
OVERTOPPING FREQUENCY	= +25	YRS
OVERTOPPING ELEVATION	= 50.0	FT
DATE OF SURVEY	= 12/09/2020	
W.S.ELEVATION AT DATE OF SURVEY	= 45.2	FT

REVISIONS

8/17/99

24-SEP-2021 06:06
N:\NC_Highway\M19004 - CDM Div 04\M19004.03.17\BP.4.R.116 - Edgecombe 78\Erosion Control\CADD\17BP.4.R.116_EC.psh_04_EC04.dgn
$$$$USERNAME$$$$

BP4.R005.1 CULVERT CONSTRUCTION SEQUENCE
3@12'x7' RCBC STA. 15+62 –L–
(PHASE I)

PROJECT REFERENCE NO.	SHEET NO.
BP4.R005.1	EC-4A
R/W SHEET NO.	
ROADWAY DESIGN ENGINEER	HYDRAULICS ENGINEER

1. CONSTRUCT IMPERVIOUS DIKE AS SHOWN.
2. DIVERT FLOW AROUND IMPERVIOUS DIKE THROUGH EXISTING CHANNEL.
3. UTILIZE SPECIAL STILLING BASIN AT LOCATION TO BE DETERMINED IN THE FIELD AND APPROVED BY THE ENGINEER.
4. CONSTRUCT ROADSIDE DITCH IMPROVEMENTS AND BANK STABILIZATION ALONG NORTHEAST AND SOUTHEAST QUADRANT AS SHOWN.
5. CONSTRUCT EAST BARREL OF RCBC WITHOUT SILLS AS SHOWN.

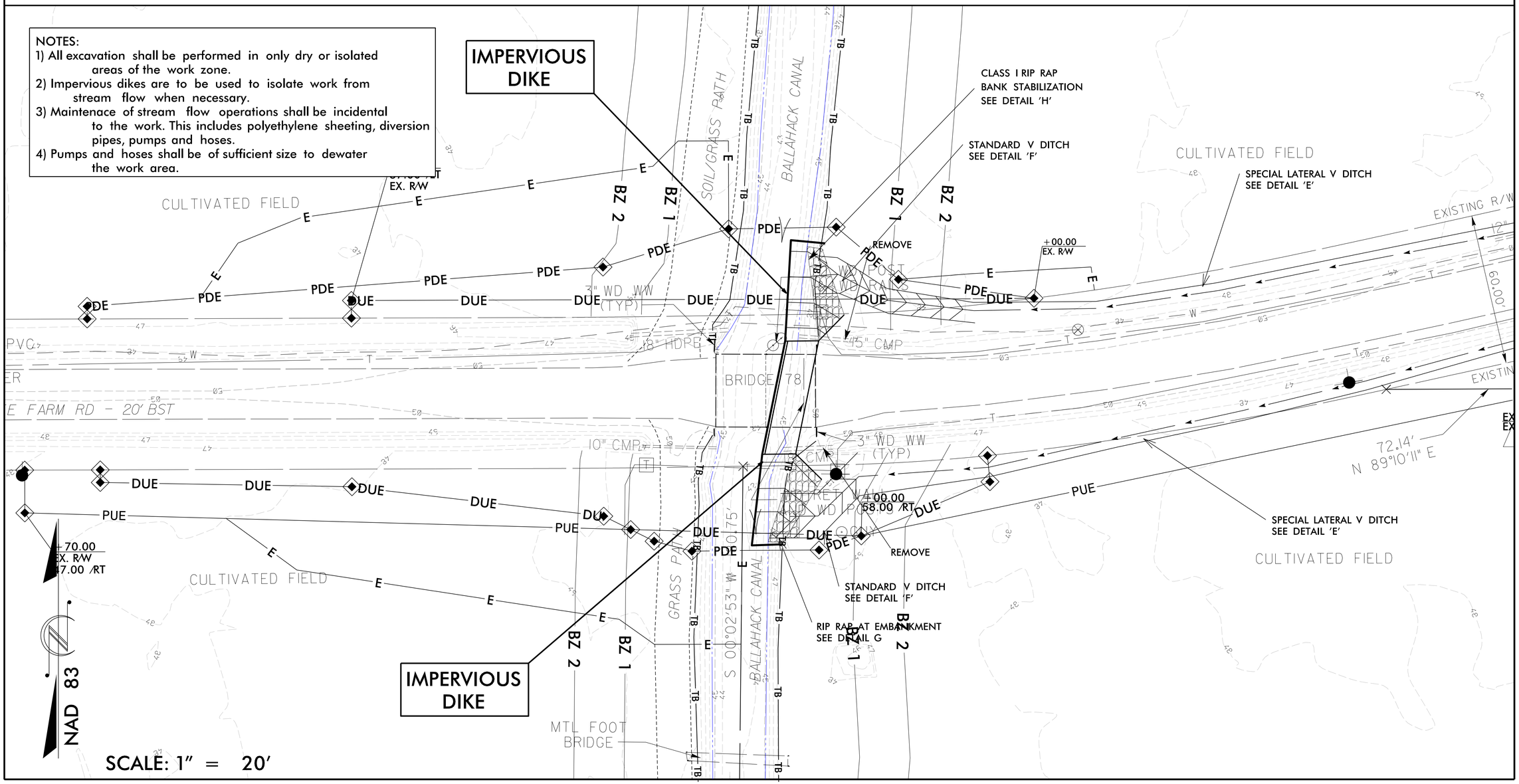

BP4.R005.1 CULVERT CONSTRUCTION SEQUENCE
3@12'x7' RCBC STA. 15+62 –L–
(PHASE II)

PROJECT REFERENCE NO.	SHEET NO.
BP4.R005.1	EC-4B
R/W SHEET NO.	
ROADWAY DESIGN ENGINEER	HYDRAULICS ENGINEER

6. REMOVE IMPERVIOUS DIKE AND ALLOW FLOW INTO EAST BARREL OF RCBC.
7. UTILIZE IMPERVIOUS DIKES AT LOCATIONS SHOWN AND DEWATER AREA AROUND MIDDLE AND WEST BARREL FOR CONSTRUCTION.
8. RELOCATE SPECIAL STILLING BASIN AT LOCATION TO BE DETERMINED IN THE FIELD AND APPROVED BY THE ENGINEER.
9. CONSTRUCT ROADSIDE DITCH IMPROVEMENTS AND BANK STABLIZATION IN NORTHWEST AND SOUTHWEST QUADRANT AS SHOWN.
10. CONSTRUCT MIDDLE BARREL AND WEST BARREL WITH SILLS AT ENTRANCE.
11. CONSTRUCT CHANNEL IMPROVEMENTS FOR MIDDLE BARREL AND WEST BARREL.

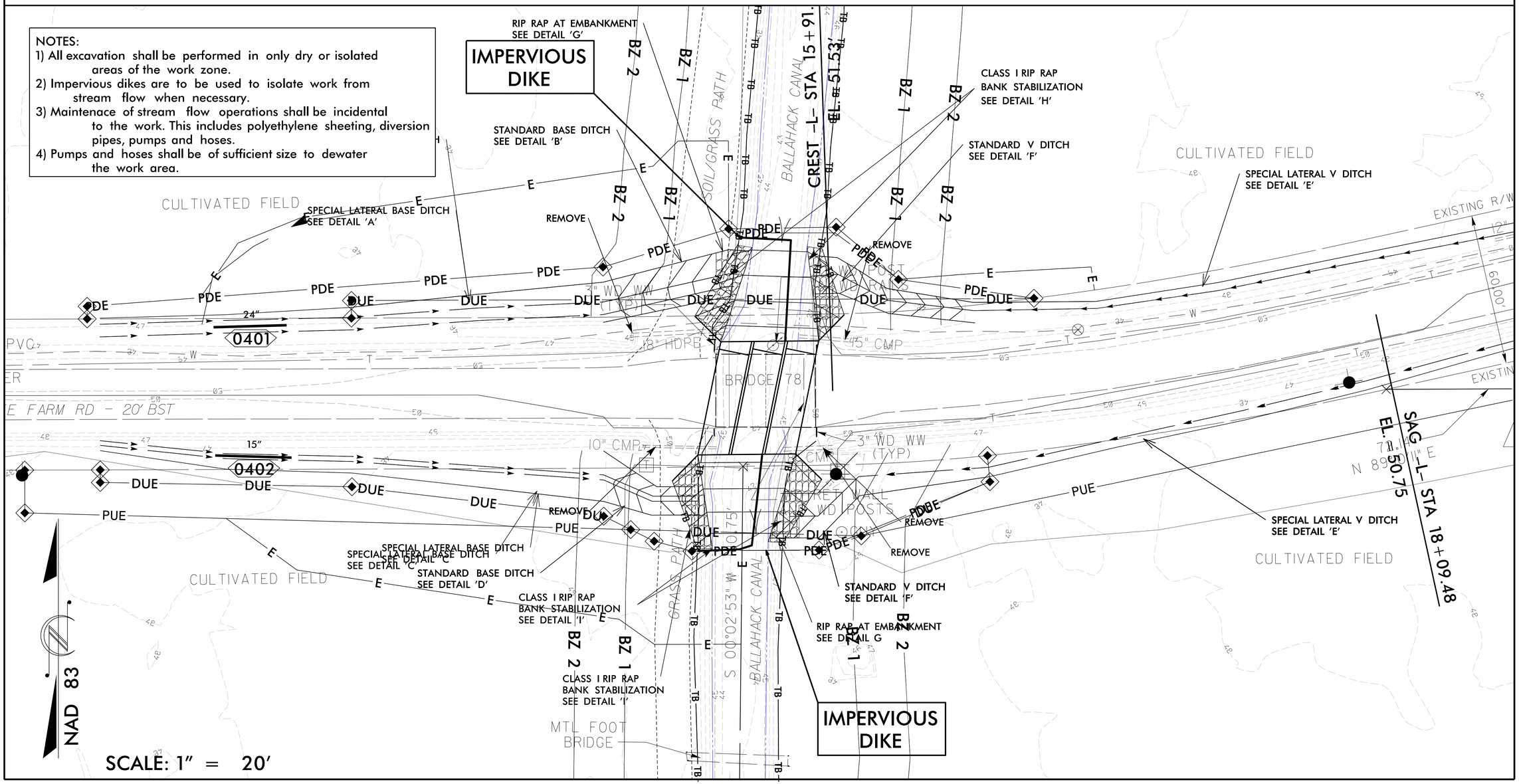

BP4.R005.1 CULVERT CONSTRUCTION SEQUENCE
3@12'x7' RCBC STA. 15+62 –L–
(PHASE III)

PROJECT REFERENCE NO.	SHEET NO.
BP4.R005.1	EC-4C
R/W SHEET NO.	
ROADWAY DESIGN ENGINEER	HYDRAULICS ENGINEER

12. REMOVE IMPERVIOUS DIKES AND DIVERT FLOW INTO MIDDLE AND WEST BARREL.
13. RELOCATE SPECIAL STILLING BASIN AT LOCATION TO BE DETERMINED IN THE FIELD AND APPROVED BY THE ENGINEER.
13. UTILIZE IMPERVIOUS DIKES AROUND EAST BARREL IN AREA SUFFICIENT ENOUGH FOR CONSTRUCTION AS SHOWN.
14. DEWATER AREA AND INSTALL SILLS IN EAST BARREL ENTRANCE.
15. CONSTRUCT CHANNEL IMPROVEMENTS FOR EAST BARREL.

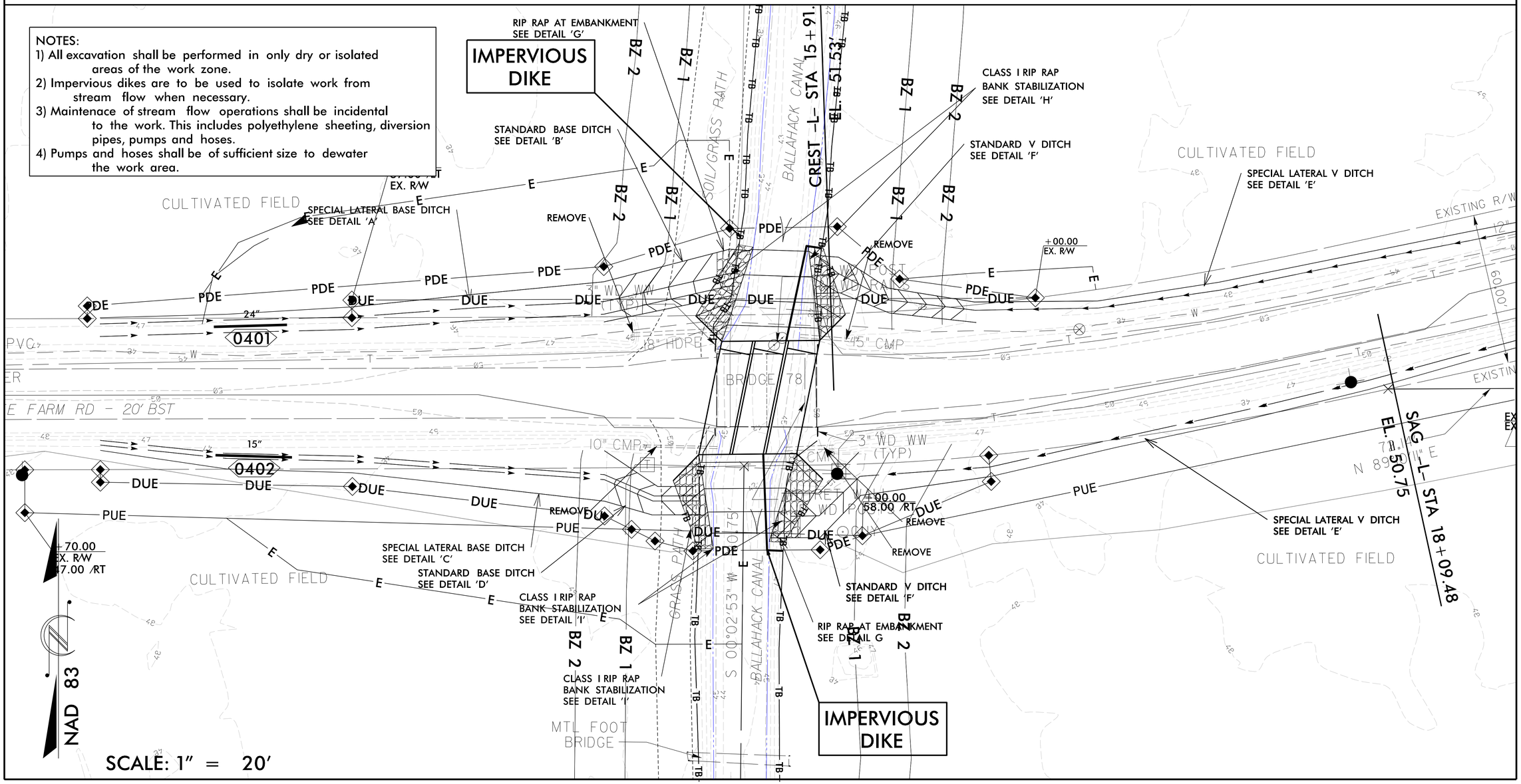

BP4.R005.1 CULVERT CONSTRUCTION SEQUENCE
3@12'x7' RCBC STA. 15+62 –L–
(PHASE IV)

PROJECT REFERENCE NO.	SHEET NO.
BP4.R005.1	EC-4D
R/W SHEET NO.	
ROADWAY DESIGN ENGINEER	HYDRAULICS ENGINEER

16. REMOVE TEMPORARY STILLING BASIN, DE–WATERING PUMP, AND TEMPORARY FLEXIBLE HOSE.
17. REMOVE IMPERVIOUS DIKES AND ALLOW FLOW THROUGH ALL BARRELS OF RCBC.
18. COMPLETE ROADWAY CONSTRUCTION.

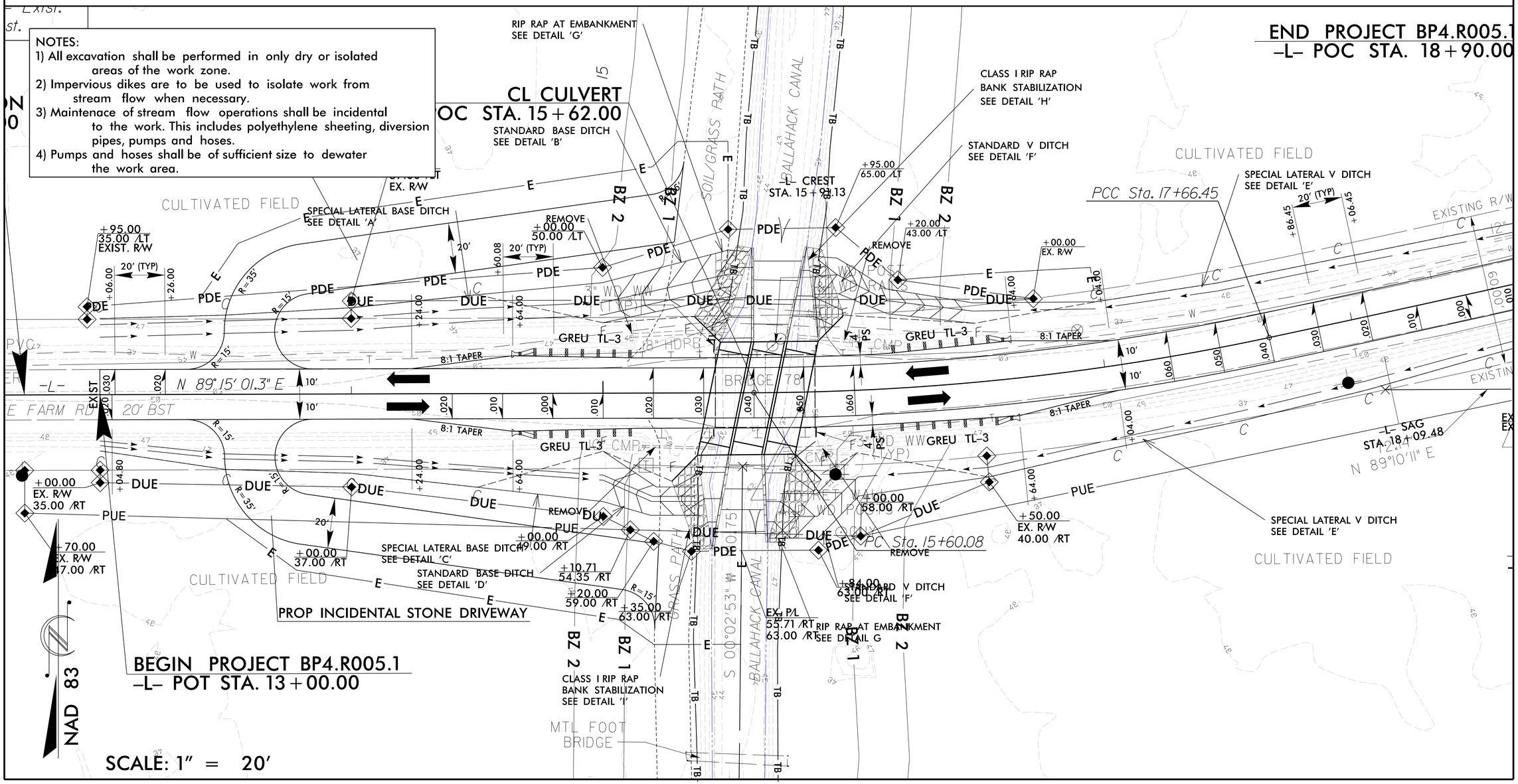

PROJECT REFERENCE NO.	SHEET NO.
BP4.R005.1	EC-05/CONST.04
R/W SHEET NO.	
ROADWAY DESIGN ENGINEER	HYDRAULICS ENGINEER
CDM Smith Inc. 5400 Glenwood Avenue Suite 400 Raleigh, NC 27612-3228 NC COA No. F-1255	MI Engineering, PLLC 1011 Schaub Drive Suite 100 Raleigh, NC 27606 NC COA No. P-0571

-L-	-L-
PI Sta 16+63.63	PI Sta 18+68.18
Δ = 11° 53' 01.1" (LT)	Δ = 1° 04' 10.7" (LT)
D = 5° 45' 30.1"	D = 0° 31' 32.7"
L = 206.37'	L = 203.45'
T = 103.56'	T = 101.73'
R = 995.00'	R = 10,897.91'
e = 6%	e = Exist.
RUNOFF = 120'	RUNOFF = Exist.
DS = 50 MPH	DS = Exist.

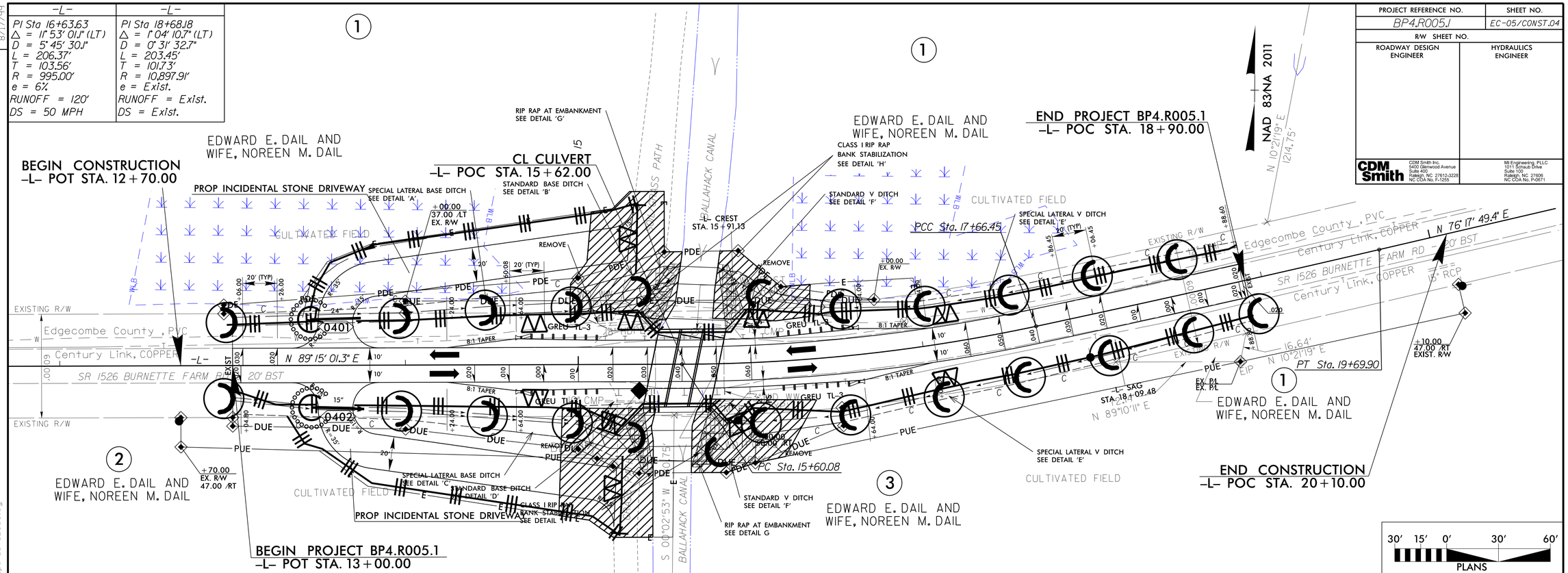

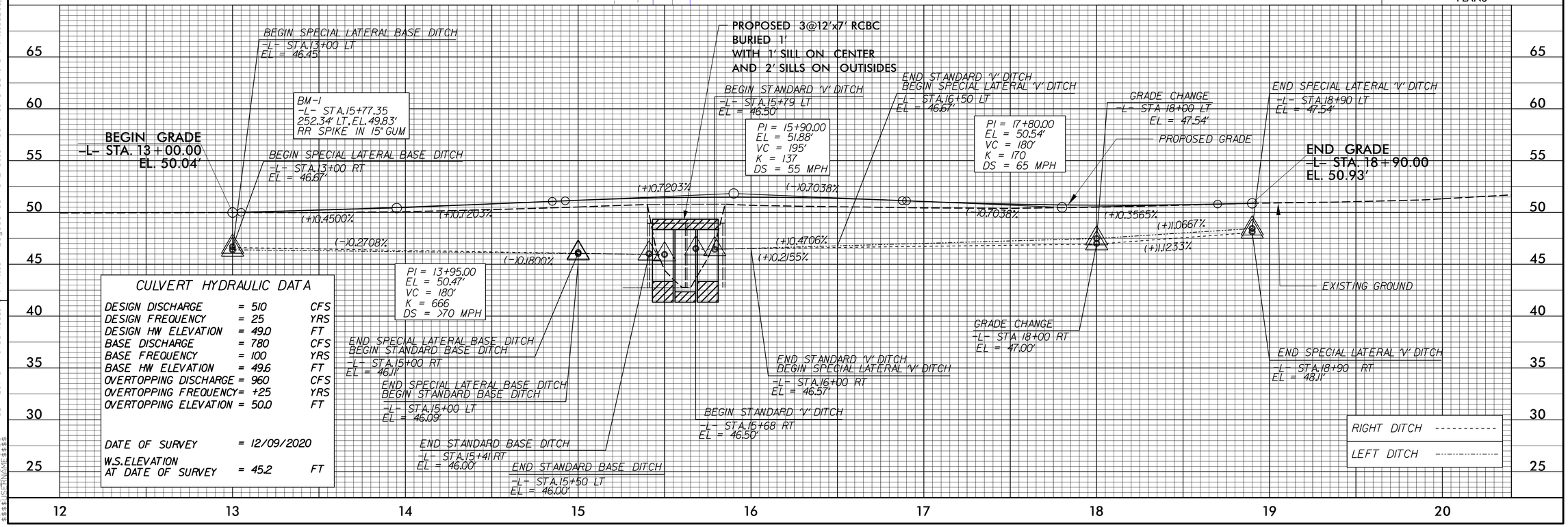

CULVERT HYDRAULIC DATA

DESIGN DISCHARGE	= 510	CFS
DESIGN FREQUENCY	= 25	YRS
DESIGN HW ELEVATION	= 49.0	FT
BASE DISCHARGE	= 780	CFS
BASE FREQUENCY	= 100	YRS
BASE HW ELEVATION	= 49.6	FT
OVERTOPPING DISCHARGE	= 960	CFS
OVERTOPPING FREQUENCY	= +25	YRS
OVERTOPPING ELEVATION	= 50.0	FT
DATE OF SURVEY	= 12/09/2020	
W.S.ELEVATION AT DATE OF SURVEY	= 45.2	FT

REVISIONS

8/17/99

24-SEP-2021 06:07
N:\NC_Hydro\M19004 - CDM Div 04\M19004.03.17\BP4.R.116 - Edgecombe 78\Erosion Control\CADD\17BP4.R.116.EC.psh_04_EC05.dgn
$$$$USERNAME$$$$

DocuSign Envelope ID: 35AC87FE-6600-4DAB-9788-B4AADC5D9912

PROJECT: BP4.R005.1

T.I.P. NO.	SHEET NO.
BP4.R005.1	UC–01

STATE OF NORTH CAROLINA
DIVISION OF HIGHWAYS

UTILITY CONSTRUCTION PLANS
EDGECOMBE COUNTY

LOCATION: BRIDGE NO. 78 OVER BALLAHACK CANAL ON SR 1526 BURNETTE FARM ROAD

TYPE OF WORK: WATER LINE RELOCATION

NAD 83/
NA 2011

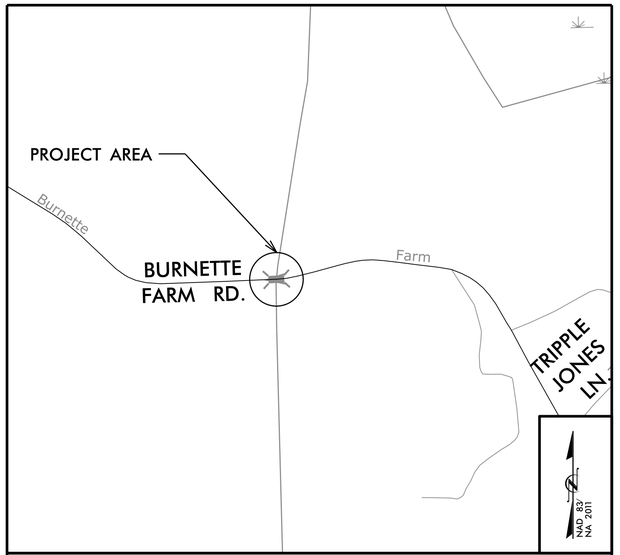

VICINITY MAP

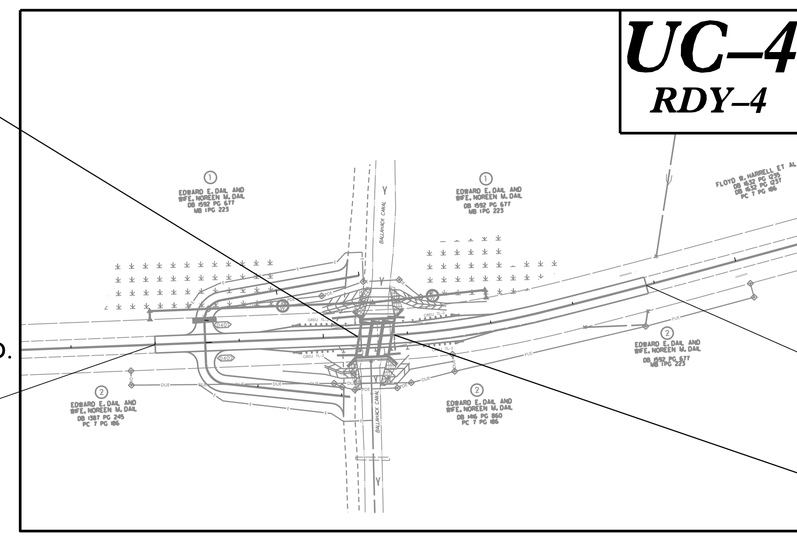
UC–4
RDY–4
EDWARD E. DAIL AND
WIFE, NOREEN M. DAIL
DB 1317 PG 245
PC 7 PG 486
EDWARD E. DAIL AND
WIFE, NOREEN M. DAIL
DB 1592 PG 677
MB 1PG 223

DocuSign Envelope ID: 35AC87FE-6600-4DAB-9788-B4AADC5D9912

PROJECT REFERENCE NO.	SHEET NO.
BP4.R005.1	UC-2

STATE OF NORTH CAROLINA
DIVISION OF HIGHWAYS

UTILITIES PLAN SHEET SYMBOLS

PROPOSED WATER SYMBOLS

- Water Line (Sized as Shown) — 12" WL
- 11¼ Degree Bend
- 22½ Degree Bend
- 45 Degree Bend
- 90 Degree Bend
- Plug
- Tee
- Cross
- Reducer
- Gate Valve — GV
- Butterfly Valve — BV
- Tapping Valve — TGV
- Line Stop — LS
- Line Stop with Bypass — LS/BP
- Blow Off — BO
- Fire Hydrant — PFH
- Relocate Fire Hydrant — REH
- Remove Fire Hydrant — REM FH
- Water Meter — PWM
- Relocate Water Meter — RWM
- Remove Water Meter — REM WM
- Water Pump Station — PS(W)
- RPZ Backflow Preventer — PRPZ
- DCV Backflow Preventer — PBFP
- Relocate RPZ Backflow Preventer — RRPZ
- Relocate DCV Backflow Preventer — RBFP

PROPOSED SEWER SYMBOLS

- Gravity Sewer Line (Sized as Shown) — 12" SS
- Force Main Sewer Line (Sized as Shown) — 12" FSS
- Manhole (Sized per Note)
- Sewer Pump Station — PS(SS)

PROPOSED MISCELLANOUS UTILITIES SYMBOLS

- Power Pole
- Telephone Pole
- Joint Use Pole
- Telephone Pedestal — TEL PED
- Utility Line by Others (Type as Shown) — PROP O/H POW LINES
- Trenchless Installation — 12" TL INSTALL
- Encasement by Open Cut — 24" ENCAS BY OC
- Encasement — 24" ENCASEMENT
- Thrust Block
- Air Release Valve — AR
- Utility Vault — UV
- Concrete Pier — CP
- Steel Pier — SP
- Plan Note — NOTE
- Pay Item Note — PAY ITEM

EXISTING UTILITIES SYMBOLS

- Power Pole
- Telephone Pole
- Joint Use Pole
- Utility Pole
- Utility Pole with Base
- H-Frame Pole
- Power Transmission Line Tower
- Water Manhole
- Power Manhole
- Telephone Manhole
- Sanitary Sewer Manhole
- Hand Hole for Cable
- Power Transformer
- Telephone Pedestal
- CATV Pedestal
- Gas Valve
- Gas Meter
- Located Miscellaneous Utility Object
- Abandoned According to Utility Records — AATUR
- End of Information — E.O.I.
- *Underground Power Line — P
- *Underground Telephone Cable — T
- *Underground Telephone Conduit — TC
- *Underground Fiber Optics Telephone Cable — T FO
- *Underground TV Cable — TV
- *Underground Fiber Optics TV Cable — TV FO
- *Underground Gas Pipeline — G
- Aboveground Gas Pipeline — A/G Gas
- *Underground Water Line — W
- Aboveground Water Line — A/G Water
- *Underground Gravity Sanitary Sewer Line — SS
- Aboveground Gravity Sanitary Sewer Line — A/G Sanitary Sewer
- *Underground SS Forced Main Line — FSS
- Underground Unknown Utility Line — ?UTL
- SUE Test Hole
- Water Meter
- Water Valve
- Fire Hydrant
- Sanitary Sewer Cleanout

*For Existing Utilities

- Utility Line Drawn from Record (Type as Shown) — W
- Designated Utility Line (Type as Shown) — W

5/14/99
10/22/2021 4:19:39 PM
\\wsdot\local\WSE\Projects\NC\CDM Smith\ENG21-____BP4.R005\Utilities\Engineering\UC\Proj\BP4R005_ut_UC-02_sym.dgn

DocuSign Envelope ID: 35AC87FE-6600-4DAB-9788-B4AADC5D9912

Weston & Sampson
WSE of North Carolina, PC
598 East Chatham Street Suite 137 Cary, NC 27511
Phone: 919.297.0220 Fax: 919.297.0221
NC License: C-4647

PROJECT REFERENCE NO.	SHEET NO.
BP4.R005.1	UC-3
DESIGNED BY: KCZ	
DRAWN BY: KCZ	
CHECKED BY: KSH	
APPROVED BY: KCZ	
REVISED:	
NORTH CAROLINA DEPARTMENT OF TRANSPORTATION	
UTILITIES ENGINEERING SEC. PHONE:(919)707-6690 FAX:(919)250-4151	UTILITY CONSTRUCTION PLANS ONLY

NORTH CAROLINA PROFESSIONAL SEAL 27611 ENGINEER KEVIN C. ZIEB
DocuSigned by: Kevin C. Zieb 1/6/2022

UTILITY CONSTRUCTION

DOCUMENT NOT CONSIDERED FINAL UNTIL ALL SIGNATURES ARE COMPLETED

UTILITY CONSTRUCTION

GENERAL NOTES:

1. THE PROPOSED UTILITY CONSTRUCTION SHALL MEET THE APPLICABLE REQUIREMENTS OF THE NC DEPARTMENT OF TRANSPORTATION'S "STANDARD SPECIFICATIONS FOR ROADS AND STRUCTURES" DATED JANUARY 2018.

2. THE EXISTING WATER LINE UTILITIES BELONG TO EDGECOMBE COUNTY.

   CONTACT: STEVE COBB
   PHONE: 252-823-3848

3. ALL WATER LINES TO BE INSTALLED WITHIN COMPLIANCE OF THE RULES AND REGULATIONS OF THE NORTH CAROLINA DEPARTMENT OF ENVIRONMENTAL AND NATURAL RESOURCES, DIVISION OF ENVIRONMENTAL HEALTH.

4. THE UTILITY OWNER OWNS THE EXISTING UTILITY FACILITIES AND WILL OWN THE NEW UTILITY FACILITIES AFTER ACCEPTANCE BY THE DEPARTMENT. THE DEPARTMENT OWNS THE CONSTRUCTION CONTRACT AND HAS ADMINISTRATIVE AUTHORITY. COMMUNICATIONS AND DECISIONS BETWEEN THE CONTRACTOR AND UTILITY OWNER ARE NOT BINDING UPON THE DEPARTMENT OR THIS CONTRACT UNLESS AUTHORIZED BY THE ENGINEER. AGREEMENTS BETWEEN THE UTILITY OWNER AND CONTRACTOR FOR THE WORK THAT IS NOT PART OF THIS CONTRACT OR IS SECONDARY TO THIS CONTRACT ARE ALLOWED, BUT ARE NOT BINDING UPON THE DEPARTMENT.

5. PROVIDE ACCESS FOR THE DEPARTMENT PERSONNEL AND THE OWNER'S REPRESENTATIVES TO ALL PHASES OF CONSTRUCTION. NOTIFY DEPARTMENT PERSONNEL AND THE UTILITY OWNER TWO WEEKS PRIOR TO COMMENCEMENT OF ANY WORK AND ONE WEEK PRIOR TO SERVICE INTERRUPTION. KEEP UTILITY OWNERS' REPRESENTATIVES INFORMED OF WORK PROGRESS AND PROVIDE OPPORTUNITY FOR INSPECTION OF CONSTRUCTION AND TESTING.

6. THE PLANS DEPICT THE BEST AVAILABLE INFORMATION FOR THE LOCATION, SIZE, AND TYPE OF MATERIAL FOR ALL EXISTING UTILITIES. MAKE INVESTIGATIONS FOR DETERMINING THE EXACT LOCATION, SIZE, AND TYPE MATERIAL OF THE EXISTING FACILITIES AS NECESSARY FOR THE CONSTRUCTION OF THE PROPOSED UTILITIES AND FOR AVOIDING DAMAGE TO EXISTING FACILITIES. REPAIR ANY DAMAGE INCURRED TO EXISTING FACILITIES TO THE ORIGINAL OR BETTER CONDITION AT NO ADDITONAL COST TO THE DEPARTMENT.

7. MAKE FINAL CONNECTIONS OF THE NEW WORK TO THE EXISTING SYSTEM WHERE INDICATED ON THE PLANS, AS REQUIRED TO FIT THE ACTUAL CONDITIONS, OR AS DIRECTED.

8. MAKE CONNECTIONS BETWEEN EXISTING AND PROPOSED UTILITIES AT TIMES MOST CONVENIENT TO THE PUBLIC, WITHOUT ENDANGERING THE UTILITY SERVICE, AND IN ACCORDANCE WITH THE UTILITY OWNER'S REQUIREMENTS. MAKE CONNECTIONS ON WEEKENDS, AT NIGHT, AND ON HOLIDAYS IF NECESSARY.

9. ALL UTILITY MATERIALS SHALL BE APPROVED PRIOR TO DELIVERY TO THE PROJECT. SEE 1500-7, " SUBMITTALS AND RECORDS" IN SECTION 1500 OF THE STANDARD SPECIFICATIONS.

PROJECT NOTES:

1. THERE ARE NO KNOWN WATER SERVICE LINES OR SANITARY SEWER LINES WITHIN THE PROJECT LIMITS.

2. CONTRACTOR'S ATTENTION IS DIRECTED TO SECTIONS 102, 107, AND 1550 OF THE STANDARD SPECIFICATIONS CONCERNING TRENCHLESS INSTALLATION. IT IS CONTRACTOR'S RESPONSIBILITY TO HAVE BORE DESIGNED AND SEALED BY A LICENSED NORTH CAROLINA PROFESSIONAL ENGINEER. NO DAMAGE IS ALLOWED TO RIVER, STREAM, CREEK, WETLANDS, OR BUFFER ZONES.

3. PVC PIPE MANUFACTURED MORE THAN TWELVE (12) MONTHS BEFORE THE INSTALLATION DATE WILL NOT BE ACCEPTED.

4. IN THE EVENT THAT EXCESSIVE GROUNDWATER OR SPRINGS ARE ENCOUNTERED DURING PIPE CONSTRUCTION, THE CONTRACTOR SHALL EMPLOY ALL METHODS NECESSARY TO KEEP THE TRENCHES DRY AS DIRECTED BY THE ENGINEER.

5. ALL PROPOSED FITTINGS (BENDS, TEES, CROSSES, REDUCERS, PLUGS, ETC.) SHALL BE ADEQUATELY RESTRAINED BY THE USE OF RESTRAINED JOINT CONSTRUCTION OR AS DIRECTED BY THE ENGINEER. RESTRAINED JOINT FITTINGS SHALL BE OF THE SAME MANUFACTURER AS THE RESTRAINED JOINT DUCTILE IRON PIPE.

6. PROPOSED OPEN TRENCH WATER LINE SHALL BE 8" DUCTILE IRON PIPE, CLASS 350, RESTRAINED JOINT PIPE; OR 8" PVC C-900 DR-18 PIPE THAT CONFORMS TO NSF-61.

7. PROPOSED WATER LINE FOR DIRECTIONAL DRILLING SHALL BE 8" FUSIBLE PVC C-900 DR-18 PIPE THAT CONFORMS TO NSF-61.

8. DUCTILE IRON PIPE SHALL BE WRAPPED IN POLYETHYLENE ENCASEMENT CONFORMING TO AWWA C105.

9. ALL WATER LINE FITTINGS, 4-INCHES THROUGH 12-INCHES IN DIAMETER, SHALL BE DUCTILE IRON.

10. ALL VALVES ON THE WATER LINE SHALL BE GATE VALVES.

11. VALVES SHALL HAVE RESTRAINED JOINT CONNECTIONS OR USE MECHANICAL JOINT RESTRAINTS.

12. CONTRACTOR SHALL NOT OPERATE ANY VALVES ON THE EXISTING WATER SYSTEM. CONTRACTOR SHALL CONTACT THE UTILITY OWNER TO CONDUCT STRATEGIC OPERATION OF EXISTING VALVES FOR SERVICE INTERRUPTION IN ORDER TO PERFORM SPECIFIC WORK.

13. ALL TESTING AND DISINFECTION SHALL BE CONDUCTED IN THE PRESENCE OF THE ENGINEER.

14. FINAL CONNECTIONS TO EXISTING FACILITIES SHALL BE WITNESSED BY UTILITY OWNER'S REPRESENTATIVE.

15. WATER LINE SHALL NOT BE OUT OF SERVICE FOR MORE THAN FOUR (4) HOURS. IF A PLANNED OUTAGE IS EXPECTED TO BE LONGER THAN 4 HOURS, THEN THE CONTRACTOR SHALL INSTALL LINE STOPS WITH BYPASS AT EACH OF THE WATER LINE TIE-IN LOCATIONS AS DIRECTED BY THE ENGINEER IN ORDER TO MAINTAIN SERVICE.

8/17/99
1/6/2022
10:40:44 AM
\\wse03.local\WSE\Projects\NC\CDM Smith\ENG2J-####_BP4.R005\Utilities\Engineering\UC\Proj\BP4R005_ut_UC-03_nte.dgn

DocuSign Envelope ID: 35AC87FE-6600-4DAB-9788-B4AADC5D9912

8/17/99

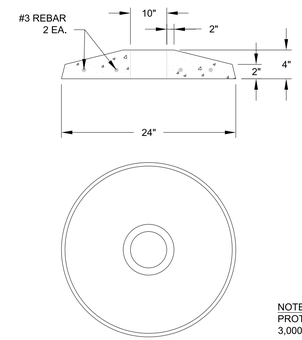

NOTE:
PROTECTOR RING SHALL BE
3,000 P.S.I. CONCRETE.

CONCRETE PROTECTOR RING

NOT TO SCALE

PIPE BEDDING DETAIL

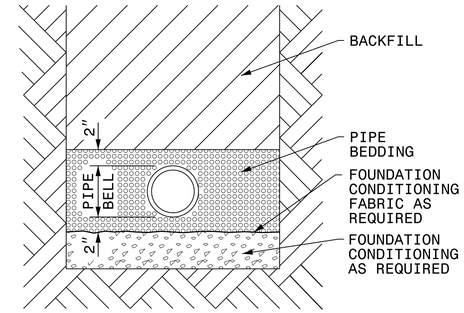

PLACE FOUNDATION CONDITIONING MATERIAL BELOW BEDDING IF REQUIRED, AS DIRECTED BY ENGINEER.
PIPE BEDDED IN SELECT MATERIAL, CLASS II (TYPE 1) OR CLASS III.
TRENCH BACKFILLED IN LOOSE 6″ LAYERS COMPACTED TO TOP OF TRENCH USING LOCAL EXCAVATED MATERIAL IF APPROVED BY THE ENGINEER, OR SELECT MATERIAL.
ALL MATERIAL SHALL BE FREE OF ROCKS, FOREIGN MATERIAL, AND FROZEN EARTH.
COMPACTION SHALL BE TO APPROXIMATELY 95% DENSITY IN ACCORDANCE WITH AASHTO T-99 AS MODIFIED BY THE DEPARTMENT OF TRANSPORTATION.

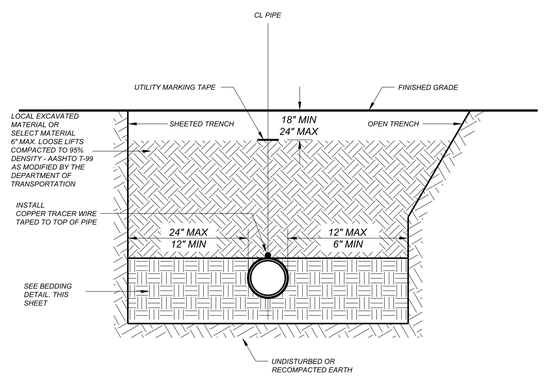

NOTES:
1. ALL SHORING & TRENCHING SHALL COMPLY WITH OSHA SAFETY STANDARDS FOR THE CONSTRUCTION INDUSTRY.
2. BELL HOLES NOT SHOWN.
3. ALL BACKFILL MATERIAL SHALL BE FREE OF ROCKS, FOREIGN MATERIAL, AND FROZEN EARTH.

GENERAL TRENCH DETAIL

NTS

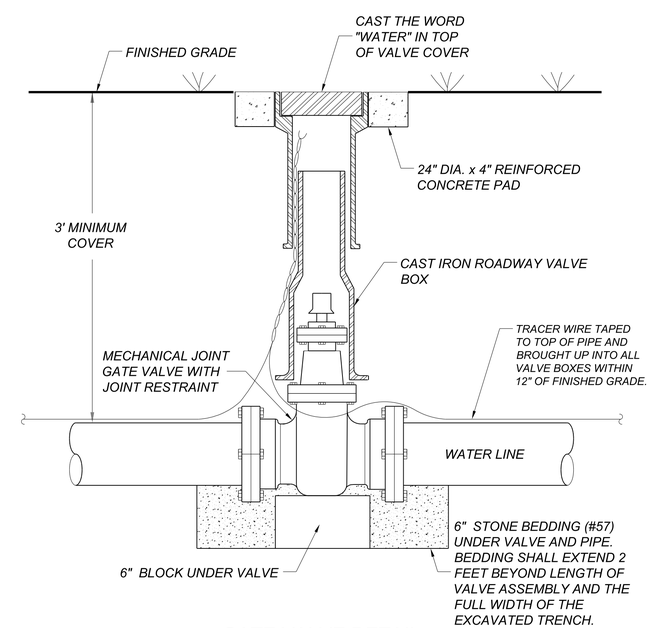

GATE VALVE DETAIL

NOT TO SCALE

PROJECT REFERENCE NO.	SHEET NO.
BP4.R005.1	UC-3A
DESIGNED BY: AJC	
DRAWN BY: AJC	
CHECKED BY: KSH	
APPROVED BY: KCZ	
REVISED:	
NORTH CAROLINA DEPARTMENT OF TRANSPORTATION	
UTILITIES ENGINEERING SEC. PHONE:(919)707-6690 FAX:(919)250-4151	UTILITY CONSTRUCTION PLANS ONLY

NORTH CAROLINA PROFESSIONAL SEAL 27611 ENGINEER KEVIN C. ZOLB 1/6/2022

Weston & Sampson
WSE of North Carolina, PC
598 East Chatham Street Suite 137
Phone: 919.297.0220
NC License: C-4647
Cary, NC 27511
Fax: 919.297.0221

UTILITY CONSTRUCTION

DOCUMENT NOT CONSIDERED FINAL UNTIL ALL SIGNATURES ARE COMPLETED

WATER LINE DETAILS

1/6/2022
\\wseg03.local\WSE\Projects\NC\CDM Smith\ENG21-####_BP4.R005\Utilities\Engineering\UC\Proj\BP4R005_ut_UC-03A_dtl.dgn
10:44:03 AM

DocuSign Envelope ID: 35AC87FE-6600-4DAB-9788-B4AADC5D9912

8/17/99

RESTRAINED JOINT DESIGN TABLE FOR DUCTILE IRON POLYETHYLENE WRAPPED PIPE

FITTING	REQUIRED RESTRAINED LENGTH (FT) OF PVC PIPE BY DEPTH OF COVER							
HORIZONTAL BENDS	3FT	4FT	5FT	6FT	7FT	8FT	9FT	10FT
8 INCH - 11.25 DEG	4	3	3	3	2	2	2	2
8 INCH - 22.5 DEG	7	6	5	5	4	4	4	3
8 INCH - 45 DEG	14	12	11	10	9	8	7	7
VERTICAL DOWN BENDS	3FT	4FT	5FT	6FT	7FT	8FT	9FT	10FT
8 INCH - 11.25 DEG	16	12	10	9	7	7	6	5
8 INCH - 22.5 DEG	31	24	20	17	15	13	12	10
8 INCH - 45 DEG	65	50	41	34	30	26	23	21
VERTICAL UP BENDS	3FT	4FT	5FT	6FT	7FT	8FT	9FT	10FT
8 INCH - 11.25 DEG	-	3	3	3	2	2	2	2
8 INCH - 22.5 DEG	-	6	5	5	4	4	4	3
8 INCH - 45 DEG	-	12	11	10	9	8	7	7

ASSUMPTIONS:
SAFETY FACTOR = 1.5
DESIGN PRESSURE = 200 PSI (TEST PRESSURE)
LAYING CONDITION = TYPE 4
SOIL DESIGNATION: CL (BROWN CLAY)

NOTES:
1. RESTRAINED LENGTH IS MEASURED FROM THE CENTER OF THE BEND AS FOLLOWS:
   A. HORIZONTAL AND VERTICAL BENDS: ALONG EACH SIDE OF THE BEND.
   B. HORIZONTAL AND VERTICAL BENDS - OFFSET OR COMBINED: ALONG THE OUTER SIDE OF EACH BEND. ALL PIPE BETWEEN THE TWO BENDS SHALL BE RESTRAINED JOINT WHEN:
      1) THE DISTANCE BETWEEN THEM IS EQUAL THE REQUIRED LENGTH
      2) THE DISTANCE BETWEEN THEM LESS THAN THE REQUIRED LENGTH
      3) AS NOTED ON THE PLANS
      4) AS DIRECTED BY THE ENGINEER

RESTRAINED JOINT DESIGN TABLE FOR PVC PIPE

FITTING	REQUIRED RESTRAINED LENGTH (FT) OF PVC PIPE BY DEPTH OF COVER							
HORIZONTAL BENDS	3FT	4FT	5FT	6FT	7FT	8FT	9FT	10FT
8 INCH - 11.25 DEG	4	3	3	3	2	2	2	2
8 INCH - 22.5 DEG	7	6	5	5	4	4	4	4
8 INCH - 45 DEG	13	12	10	9	9	8	7	7
VERTICAL DOWN BENDS	3FT	4FT	5FT	6FT	7FT	8FT	9FT	10FT
8 INCH - 11.25 DEG	11	10	9	8	7	7	6	6
8 INCH - 22.5 DEG	23	20	18	16	14	13	12	11
8 INCH - 45 DEG	47	41	36	32	29	27	25	23
VERTICAL UP BENDS	3FT	4FT	5FT	6FT	7FT	8FT	9FT	10FT
8 INCH - 11.25 DEG	-	3	3	3	2	2	2	2
8 INCH - 22.5 DEG	-	6	5	5	4	4	4	4
8 INCH - 45 DEG	-	12	10	9	9	8	7	7

ASSUMPTIONS:
SAFETY FACTOR = 1.5
DESIGN PRESSURE = 200 PSI (TEST PRESSURE)
LAYING CONDITION = TYPE 4
SOIL DESIGNATION: CL (BROWN CLAY)

NOTES:
1. RESTRAINED LENGTH IS MEASURED FROM THE CENTER OF THE BEND AS FOLLOWS:
   A. HORIZONTAL AND VERTICAL BENDS: ALONG EACH SIDE OF THE BEND.
   B. HORIZONTAL AND VERTICAL BENDS - OFFSET OR COMBINED: ALONG THE OUTER SIDE OF EACH BEND. ALL PIPE BETWEEN THE TWO BENDS SHALL BE RESTRAINED JOINT WHEN:
      1) THE DISTANCE BETWEEN THEM IS EQUAL THE REQUIRED LENGTH
      2) THE DISTANCE BETWEEN THEM LESS THAN THE REQUIRED LENGTH
      3) AS NOTED ON THE PLANS
      4) AS DIRECTED BY THE ENGINEER

PROJECT REFERENCE NO.	SHEET NO.
BP4.R005.1	UC-3B

DESIGNED BY: AJC
DRAWN BY: AJC
CHECKED BY: KSH
APPROVED BY: KCZ
REVISED:

NORTH CAROLINA PROFESSIONAL SEAL 27611 ENGINEER KEVIN C. ZACB 1/6/2022

NORTH CAROLINA DEPARTMENT OF TRANSPORTATION
UTILITIES ENGINEERING SEC.
PHONE:(919)707-6690
FAX:(919)250-4151

UTILITY CONSTRUCTION PLANS ONLY

Weston & Sampson
WSE of North Carolina, PC
598 East Chatham Street Suite 137
Phone: 919.297.0220
NC License: C-4647
Cary, NC 27511
Fax: 919.297.0221

UTILITY CONSTRUCTION

DOCUMENT NOT CONSIDERED FINAL UNTIL ALL SIGNATURES ARE COMPLETED

WATER LINE DETAILS

1/6/2022
10:47:02 AM
\\wsg03.local\WSE\Projects\NC\CDM Smith\ENG21-####_BP4.R005\Utilities\Engineering\UC\Proj\BP4R005_ut_UC-03B_dtl.dgn

DocuSign Envelope ID: 35AC87FE-6600-4DAB-9788-B4AADC5D9912

PROJECT REFERENCE NO.	SHEET NO.
BP4.R005.1	UC-4
DESIGNED BY: AJC	
DRAWN BY: AJC	
CHECKED BY: KSH	
APPROVED BY: KCZ	
REVISED:	

NORTH CAROLINA DEPARTMENT OF TRANSPORTATION

UTILITIES ENGINEERING SEC.
PHONE:(919)707-6690
FAX:(919)250-4151

NORTH CAROLINA PROFESSIONAL SEAL 19611 ENGINEER KEVIN C. ZOBB
DocuSigned by: SEAL
1/6/2022

UTILITY CONSTRUCTION PLANS ONLY

UTILITY CONSTRUCTION

DOCUMENT NOT CONSIDERED FINAL UNLESS ALL SIGNATURES COMPLETED

Weston & Sampson
WSE of North Carolina, PC
598 East Chatham Street Suite 137
Phone: 919.297.0220
Cary, NC 27511
Fax: 919.297.0221
NC License: C-4647

UTILITY OWNERS ON THIS PROJECT:

EDGECOMBE COUNTY UTILITIES
UTILITY: 8" WATER
CONTACT: STEVEN COBB
PHONE: 252-823-3848

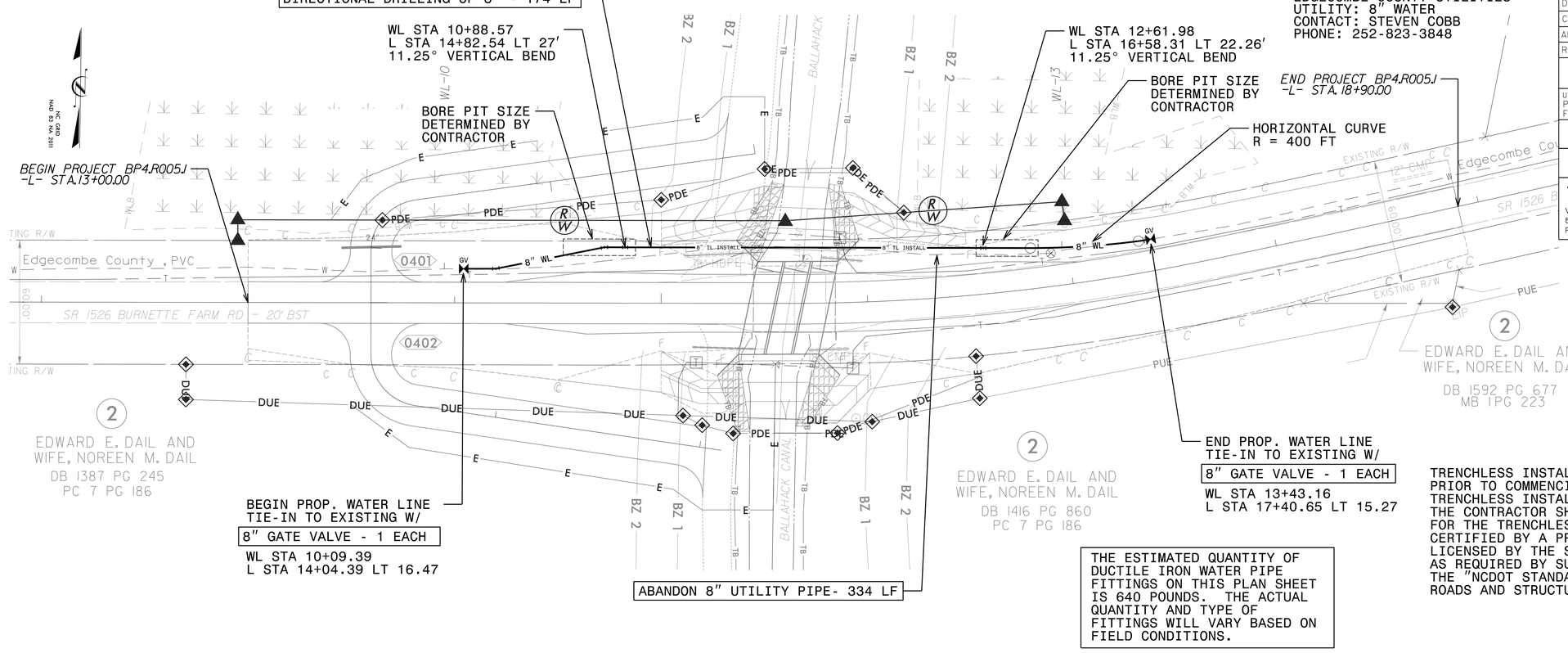

THE ESTIMATED QUANTITY OF DUCTILE IRON WATER PIPE FITTINGS ON THIS PLAN SHEET IS 640 POUNDS. THE ACTUAL QUANTITY AND TYPE OF FITTINGS WILL VARY BASED ON FIELD CONDITIONS.

TRENCHLESS INSTALLATION NOTE:
PRIOR TO COMMENCING ANY WORK ON ANY TRENCHLESS INSTALLATION ON THIS PROJECT, THE CONTRACTOR SHALL PROVIDE A DESIGN FOR THE TRENCHLESS INSTALLATION THAT IS CERTIFIED BY A PROFESSIONAL ENGINEER LICENSED BY THE STATE OF NORTH CAROLINA, AS REQUIRED BY SUBARTICLE 1550-3(B) OF THE "NCDOT STANDARD SPECIFICATIONS FOR ROADS AND STRUCTURES" DATED JANUARY 2018.

-WL-

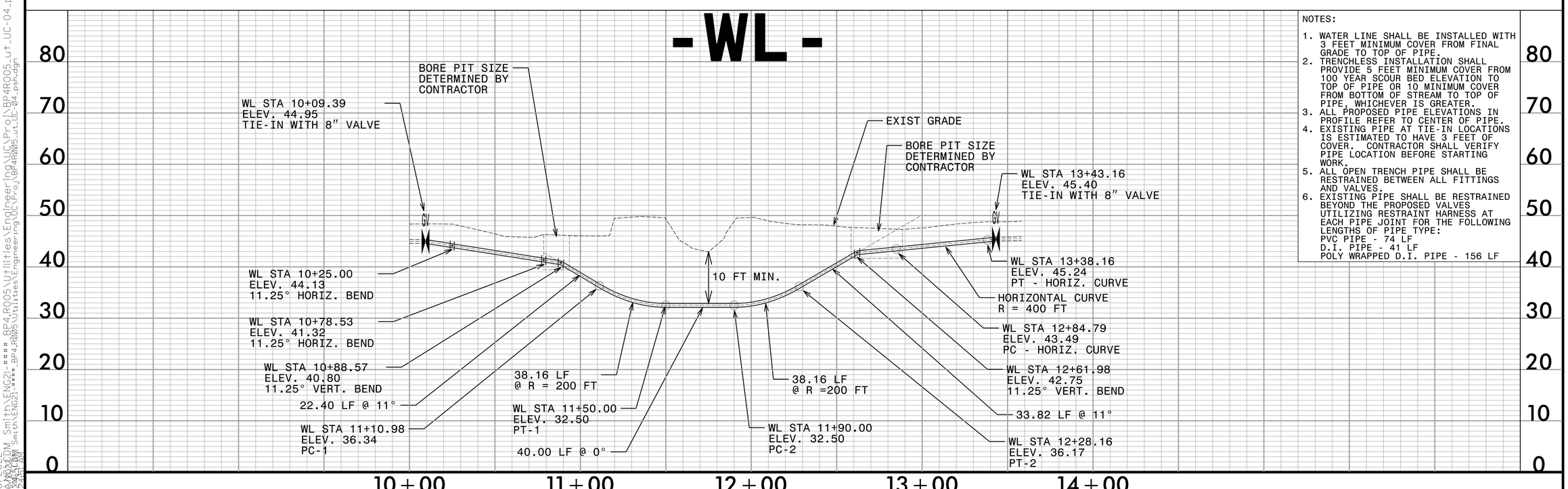

NOTES:

1. WATER LINE SHALL BE INSTALLED WITH 3 FEET MINIMUM COVER FROM FINAL GRADE TO TOP OF PIPE.
2. TRENCHLESS INSTALLATION SHALL PROVIDE 5 FEET MINIMUM COVER FROM 100 YEAR SCOUR BED ELEVATION TO TOP OF PIPE OR 10 MINIMUM COVER FROM BOTTOM OF STREAM TO TOP OF PIPE, WHICHEVER IS GREATER.
3. ALL PROPOSED PIPE ELEVATIONS IN PROFILE REFER TO CENTER OF PIPE.
4. EXISTING PIPE AT TIE-IN LOCATIONS IS ESTIMATED TO HAVE 3 FEET OF COVER. CONTRACTOR SHALL VERIFY PIPE LOCATION BEFORE STARTING WORK.
5. ALL OPEN TRENCH PIPE SHALL BE RESTRAINED BETWEEN ALL FITTINGS AND VALVES.
6. EXISTING PIPE SHALL BE RESTRAINED BEYOND THE PROPOSED VALVES UTILIZING RESTRAINT HARNESS AT EACH PIPE JOINT FOR THE FOLLOWING LENGTHS OF PIPE TYPE:
   PVC PIPE - 74 LF
   D.I. PIPE - 41 LF
   POLY WRAPPED D.I. PIPE - 156 LF

1/6/2022
R:\Projects\BP4.R005\Utilities\Engineering\UC\Proj\BP4R005_ut_UC-04_psh.dgn
BP4.R005_ut_UC-04_psh.dgn

PROJECT: BP4.R005.1

CONTRACT: DD00357

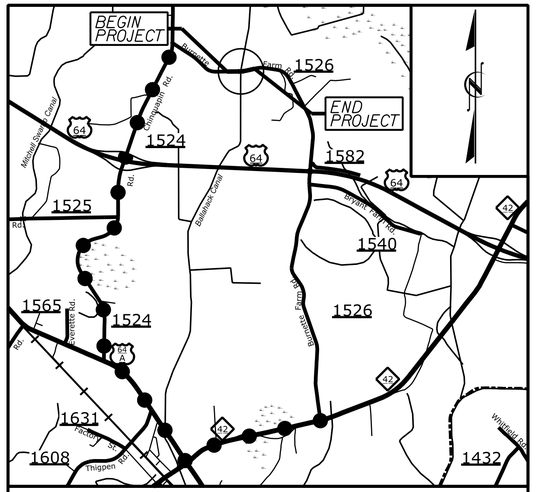

VICINITY MAP

DETOUR ROUTE

N.T.S.

STATE OF NORTH CAROLINA
DIVISION OF HIGHWAYS

UTILITIES BY OTHERS PLANS
EDGECOMBE COUNTY

T.I.P. NO.	SHEET NO.
BP4.R005.1	UO–1

NOTE:
ALL UTILITY WORK SHOWN ON THIS SHEET WILL BE DONE BY OTHERS. NO PAYMENT WILL BE MADE TO THE CONTRACTOR FOR UTILITY WORK SHOWN ON THIS SHEET.

LOCATION: REPLACE BRIDGE NO.320078 OVER BALLAHACK CANAL ON SR 1526 (BURNETTE FARM ROAD)

TYPE OF WORK: POWER (DISTRIBUTION) AND COMMUNICATIONS

NAD 83/NA 2011

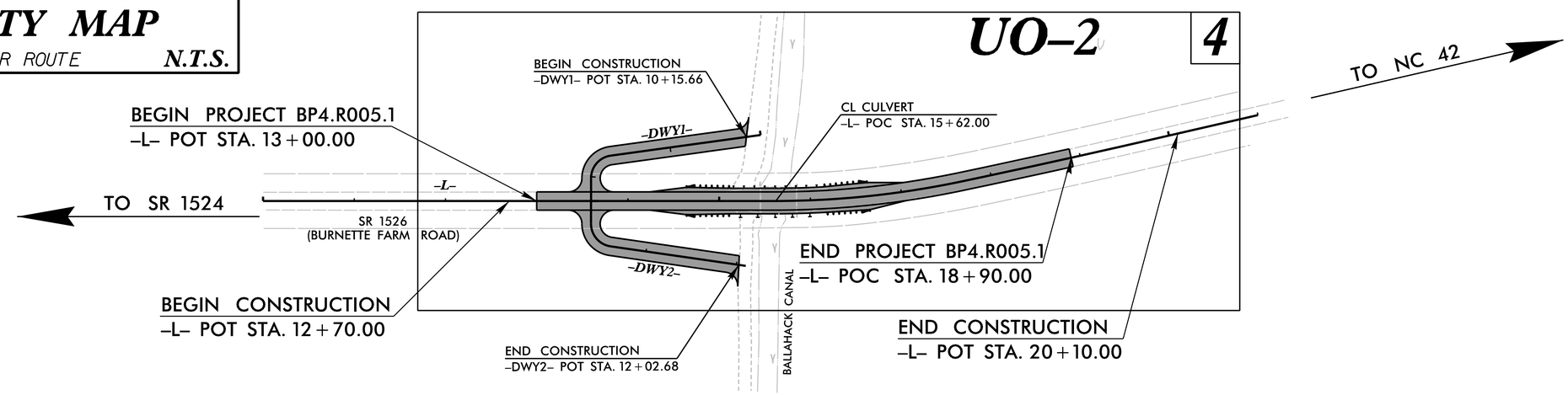

GRAPHIC SCALES

50 25 0 50 100
PLANS

50 25 0 50 100
PROFILE (HORIZONTAL)

10 5 0 10 20
PROFILE (VERTICAL)

INDEX OF SHEETS

SHEET NO.:	DESCRIPTION:
UO–1	TITLE SHEET
UO–2	UBO PLAN SHEET

UTILITY OWNERS WITH CONFLICTS

(A) POWER – EDGECOMBE /MARTIN EMC
(B) COMMUNICATIONS – CENTURYLINK

PREPARED IN THE OFFICE OF:

SAM™
2641 Sumner Boulevard
Suite 116
Raleigh, NC 27616
(919) 878–7466

Freddie Bunn — UTILITY PROJECT MANAGER
Scott Williford — PROJECT UTILITY COORDINATOR

DIVISION OF HIGHWAYS
DIVISION 04

DIV ADDRESS
509 WARD BLVD.
WILSON, NC 27895

Kyle Pleasant — DIVISION CONTACT #1
Butch Zdelar — DIVISION CONTACT #2

09/08/99
$$$

PROJECT REFERENCE NO.	SHEET NO.
BP4.R005J	4
THIS SHEET CORRESPONDS TO RDY- U0-2	

UTILITIES BY OTHERS

ALL PROPOSED UTILITY WORK SHOWN ON THIS SHEET WILL BE DONE BY OTHERS. NO PAYMENT WILL BE MADE TO THE CONTRACTOR FOR PROPOSED UTILITY WORK SHOWN ON THIS SHEET.

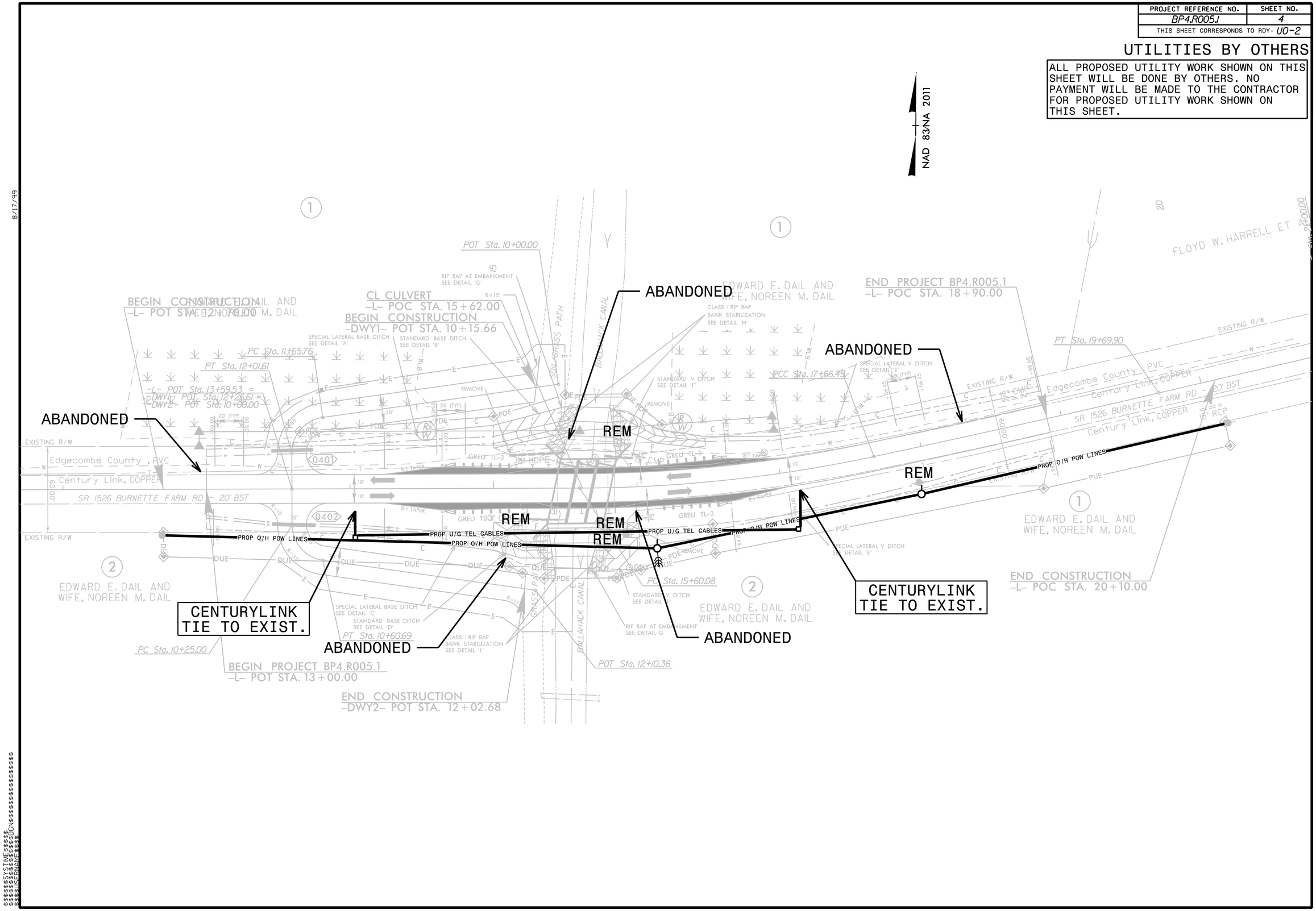

CROSS SECTION SHEET INDEX

X–1 CROSS SECTION SHEET INDEX
X–1A CROSS SECTION SUMMARY
X–2 THRU X–6 –L–

Note: "Quantities are approximate only. The Resident Engineer will re–cross–section the work accurately when the project is staked out. These cross–section notes will be used in computing the final quantities for which the contractor will be paid."

5/28/99
SYSTIME
-SYSDATE
BP4.R005.1.Rdy.X1.dgn
USER: PFRSTANIK

PROJ. REFERENCE NO.	SHEET NO.
BP4.R005.1	X-1A

STATE OF NORTH CAROLINA
DIVISION OF HIGHWAYS

Approximate quantities only. Unclassified excavation, borrow excavation, fine grading, clearing and grubbing and removal of existing pavement will be paid for at the lump sum price for "Grading".

NOTE: EMBANKMENT COLUMN DOES NOT INCLUDE BACKFILL FOR UNDERCUT

CROSS-SECTION SUMMARY

Station L	Uncl. Exc. (cu. yd.)	Embt (cu. yd.)
13+00.00	0	0
13+50.00	16	8
14+00.00	23	29
14+50.00	42	83
15+00.00	79	128
15+42.59	84	108
15+50.00	13	60
15+81.44	43	311
16+00.00	25	76
16+50.00	49	138
17+00.00	14	77
17+50.00	14	0
18+00.00	14	0
18+50.00	11	0
18+90.00	6	4

PROJ. REFERENCE NO.	SHEET NO.
BP4.R005.1	X-2

0 2.5 5

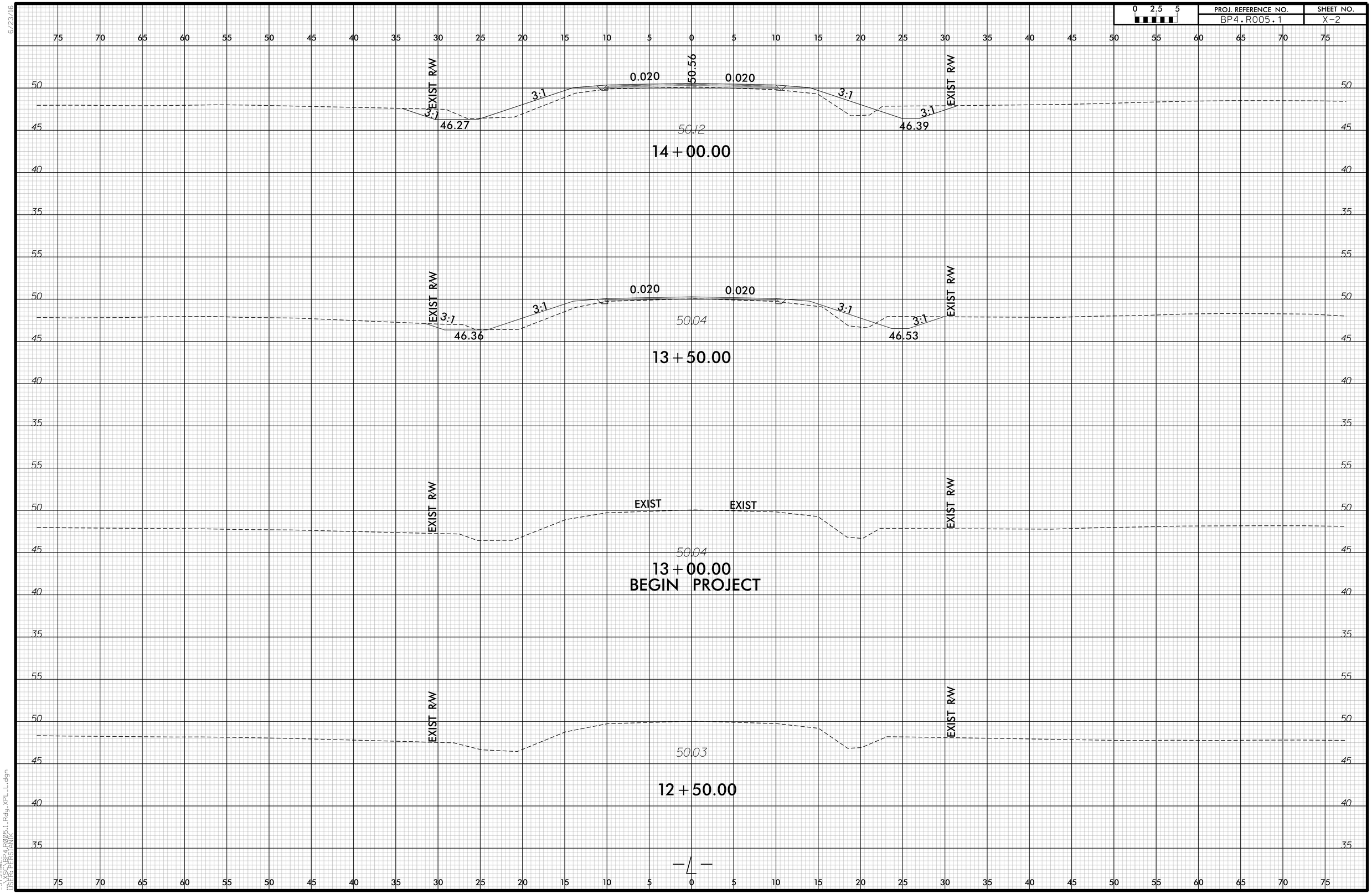

6/23/16

SYSTIME
...\XSC\BP4.R005.1.Rdy_XPL_L.dgn
USER: PERSIANIK

0 2.5 5	PROJ. REFERENCE NO.	SHEET NO.
	BP4.R005.1	X-3

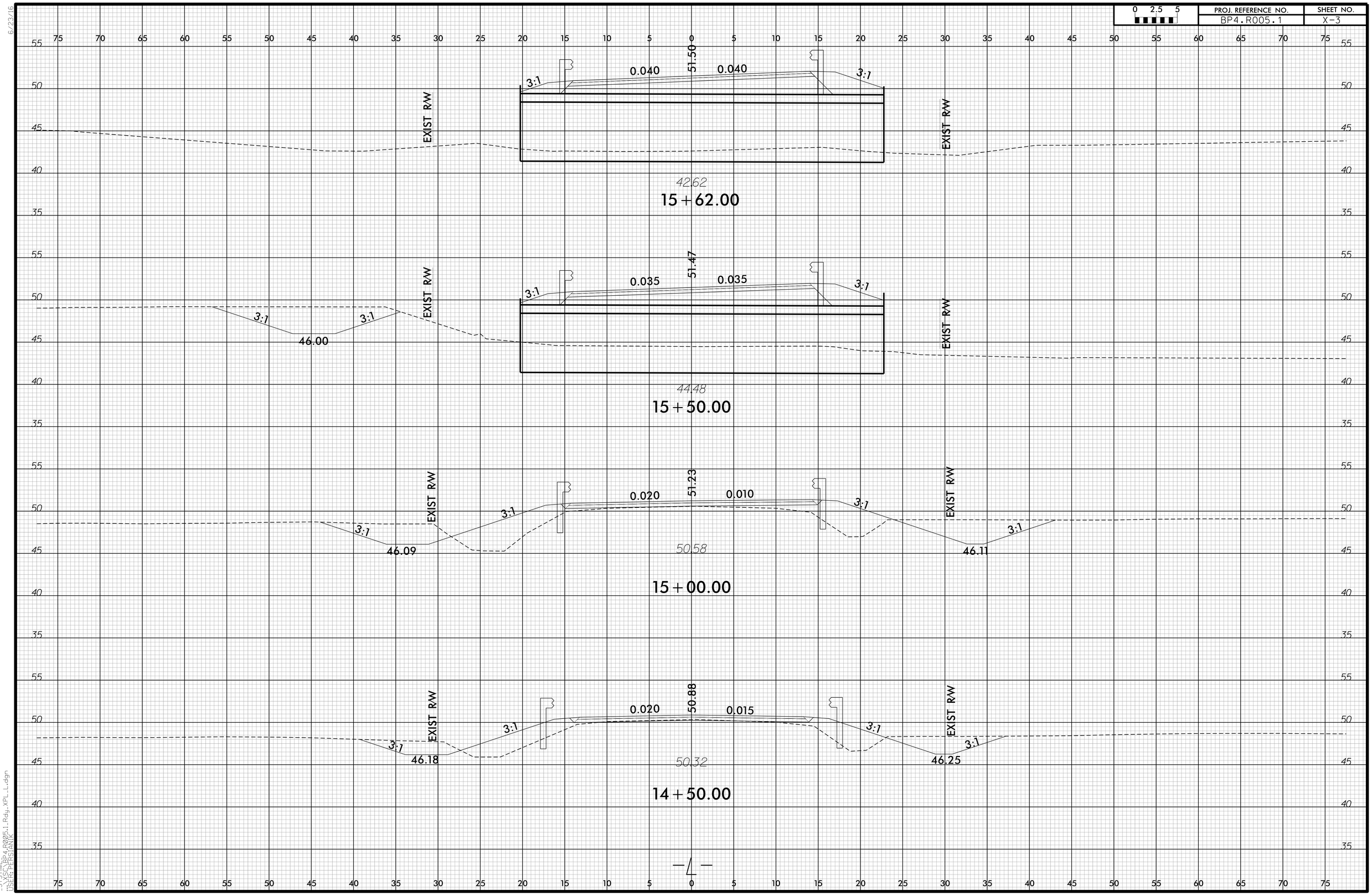

6/23/16
SYSTIME
...\XSC\BP4.R005.1_Rdy_XPL_L.dgn
USER: PERSIANIK

0 2.5 5	PROJ. REFERENCE NO.	SHEET NO.
	BP4.R005.1	X-4

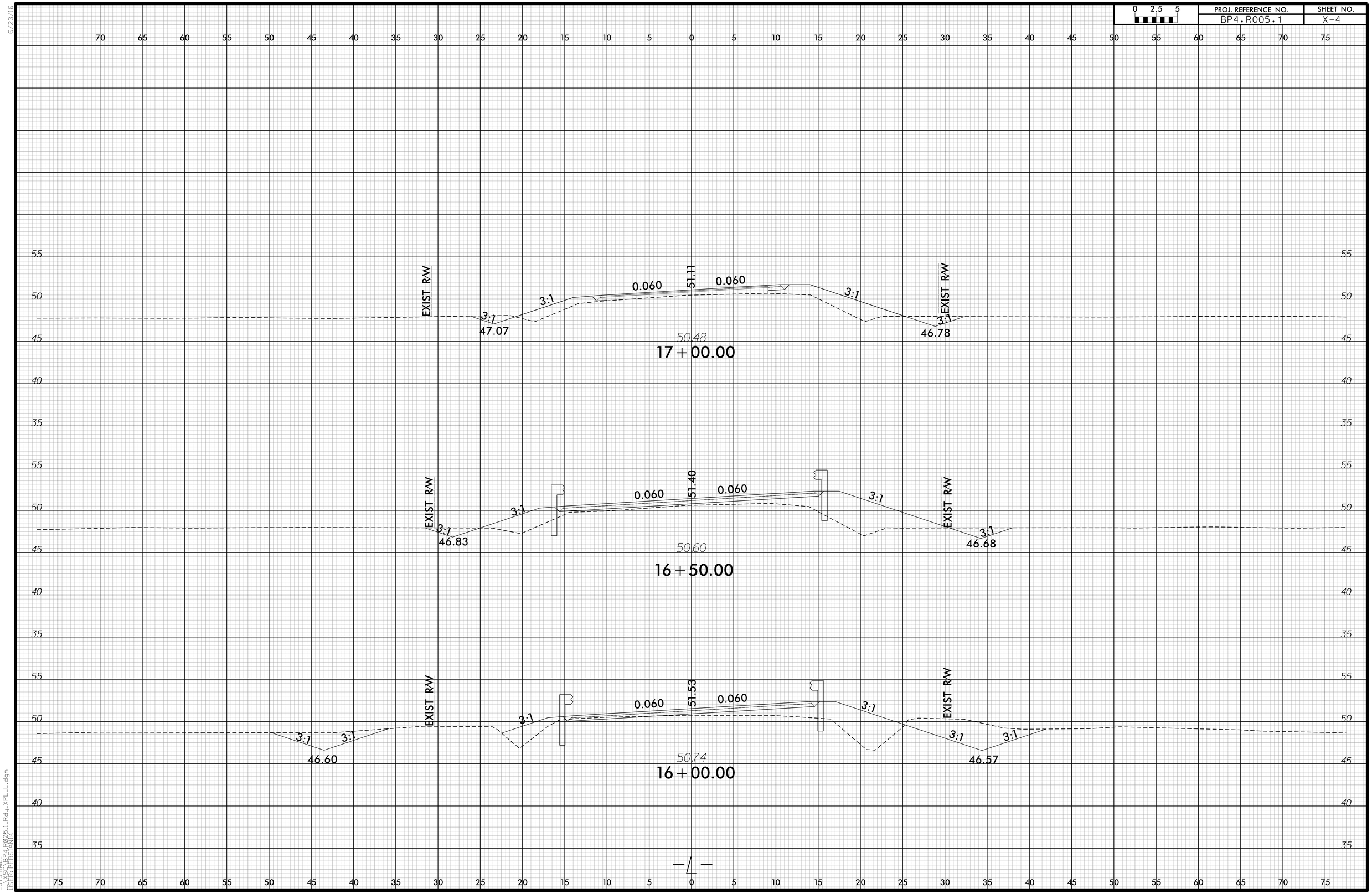

6/23/16

SYSTIME
...\XSC\BP4.R005.1.Rdy_XPL_L.dgn
USER: PERSIANIK

0 2.5 5	PROJ. REFERENCE NO.	SHEET NO.
	BP4.R005.1	X-5

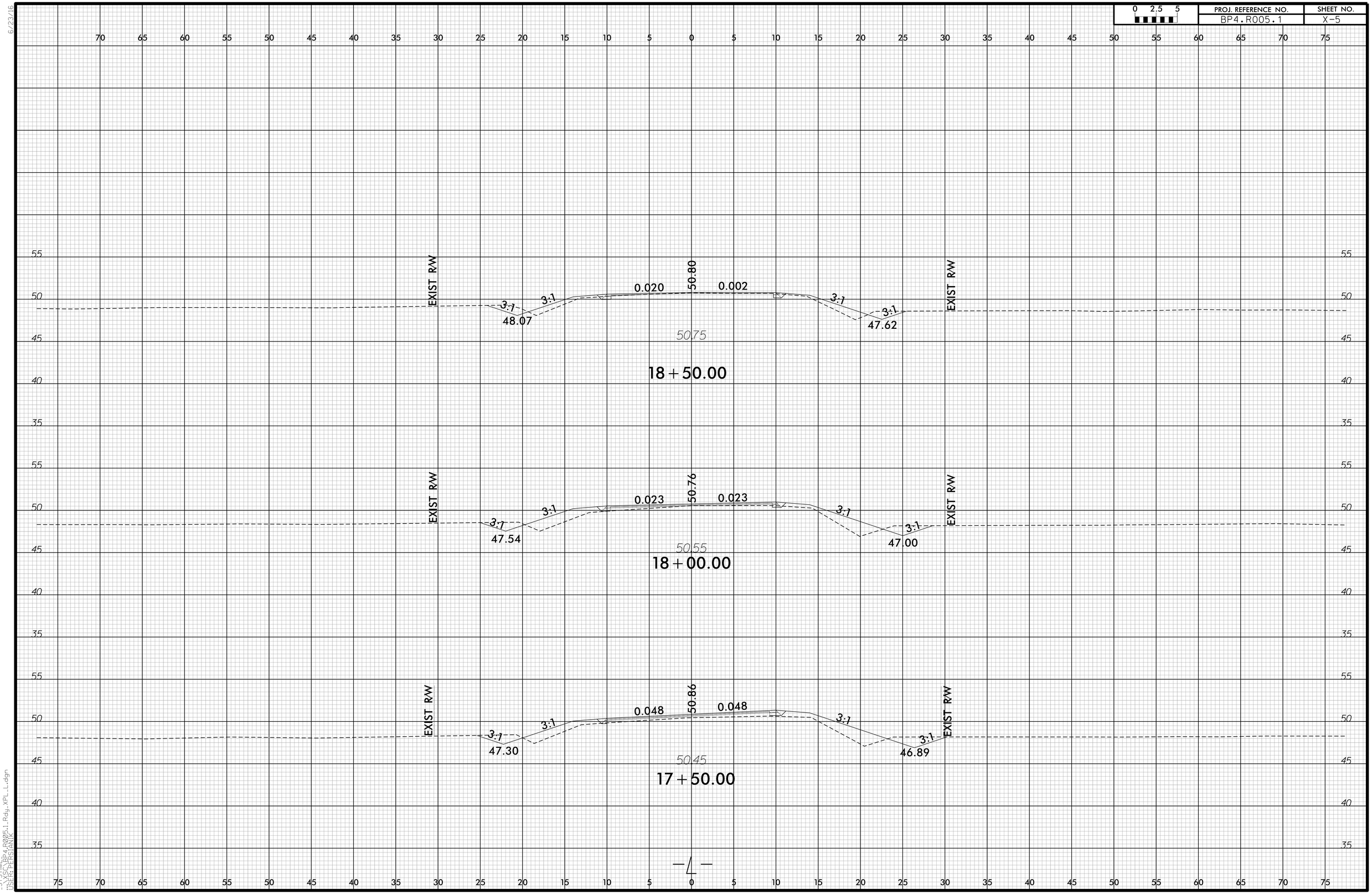

6/23/16

SYSTIME = 1:XSCVBP4.R005.1.Rdy_XPL_L.dgn
USER: PERSIANIK

6/23/16

0 2.5 5

PROJ. REFERENCE NO.	SHEET NO.
BP4.R005.1	X-6

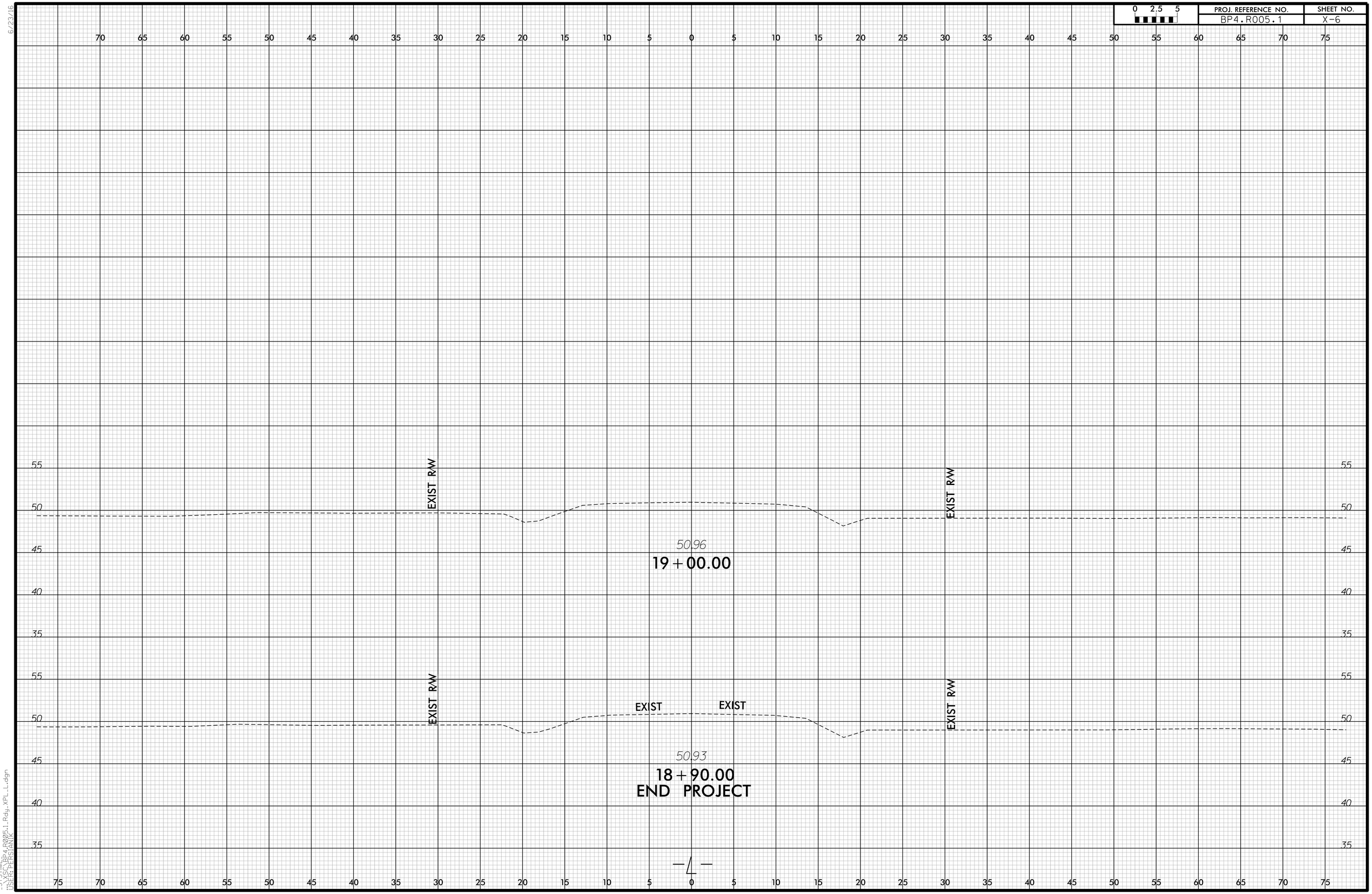

-SYSTIME
:\XSC\BP4.R005.1.Rdy_XPL_L.dgn
USER:PEERSMIK

DocuSign Envelope ID: D4AAC9AD-B3B3-411F-92A0-80BD0BDEE4DA

PROJECT: BP4.R005.1

CONTRACT: DD00357

CULVERT

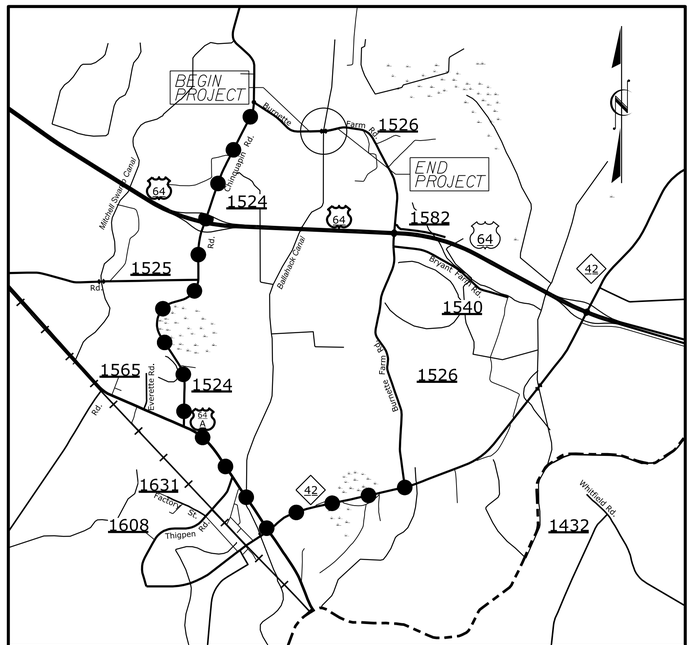

VICINITY MAP

DETOUR ROUTE

STATE OF NORTH CAROLINA
DIVISION OF HIGHWAYS

EDGECOMBE COUNTY

STATE	STATE PROJECT REFERENCE NO.	SHEET NO.	TOTAL SHEETS
N.C.	BP04.R005.1		8

STATE PROJ. NO.	F. A. PROJ. NO.	DESCRIPTION
BP04.R005.1	N/A	P.E.
BP04.R005.2	N/A	UTIL & R/W
BP04.R005.3	N/A	CONST.

LOCATION: REPLACE BRIDGE NO. 320078 OVER BALLAHACK CANAL ON SR 1526 (BURNETTE FARM ROAD)

TYPE OF WORK: GRADING, DRAINAGE, PAVING AND CULVERT

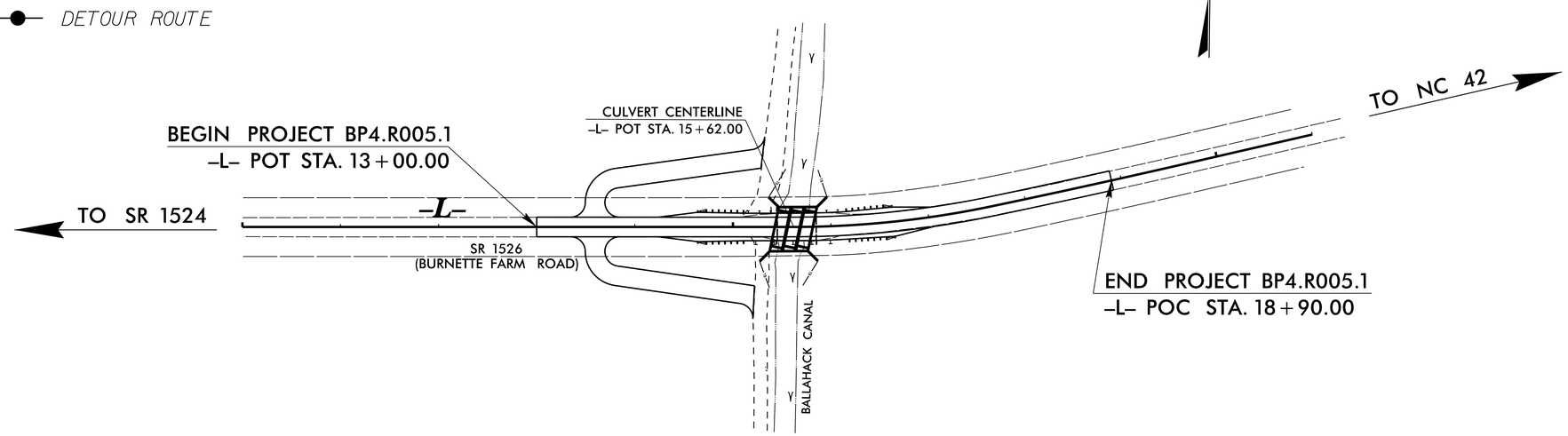

STATE OF NORTH CAROLINA DEPARTMENT OF TRANSPORTATION

DESIGN DATA

ADT 2021 = 400 VPD
ADT 2040 = 600 VDP
K = N/A
D = 50 %
T = 3 % *
V = 60 MPH
TTST = 1% DUAL = 2%
FUNC CLASS =
MAJOR COLLECTOR
SUB–REGIONAL TIER

PROJECT LENGTH

LENGTH ROADWAY PROJECT BP4.R005.1 = 0.104 MILES
LENGTH CULVERT PROJECT BP4.R005.1 = 0.008 MILES

TOTAL LENGTH PROJECT BP4.R005.1 = 0.112 MILES

Prepared In the Office of:

CDM Smith

CDM SMITH
5400 Glenwood Avenue, Suite 400
Raleigh, NC 27612–3228
NC COA No. F–1255

FOR THE NORTH CAROLINA DEPARTMENT OF TRANSPORTATION

2018 STANDARD SPECIFICATIONS

LETTING DATE : FEBRUARY 22, 2022

ADAM M. CONRAD, P.E.
PROJECT ENGINEER

TING H. FANG, P.E.
PROJECT DESIGN ENGINEER

JERRY P. PAGE, P.E.
NCDOT CONTACT

NORTH CAROLINA PROFESSIONAL SEAL 16301 ENGINEER TING HSIUNG FANG

Ting Fang

60E43C9AEA80462...

11/12/2021

DocuSign Envelope ID: 29A96E7B-B08B-4B0C-8EF2-6009A0326F12

BM 1 : RR SPIKE IN BASE OF 15" GUM; STA. 15+77.35, -L- 252.34' LT. EL. 49.83

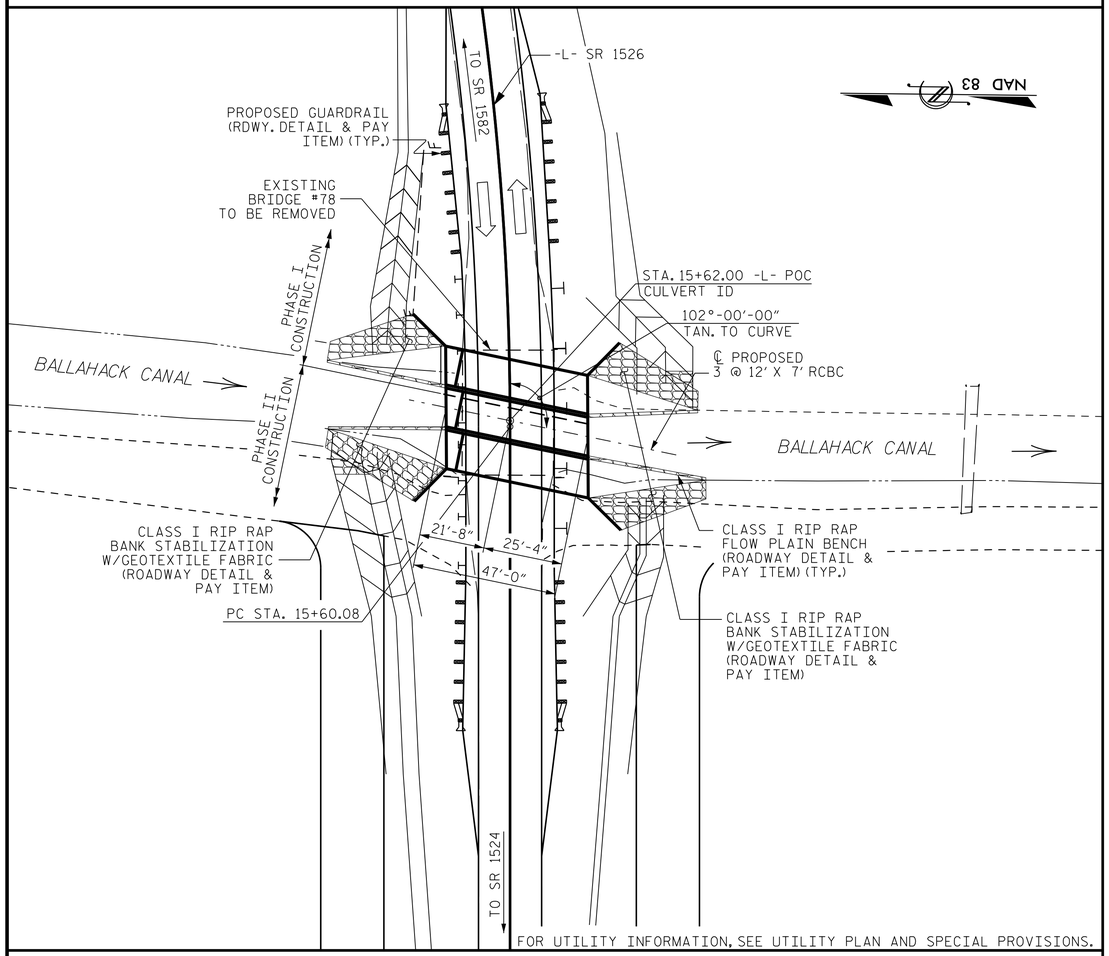

FOR UTILITY INFORMATION, SEE UTILITY PLAN AND SPECIAL PROVISIONS.

LOCATION SKETCH

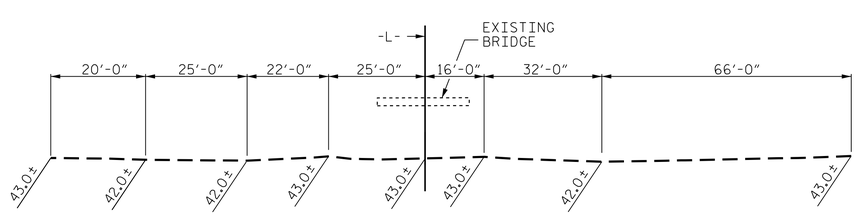

PROFILE ALONG ℄ CULVERT

ROADWAY DATA

GRADE PT. EL. @ STA. 15+62.00 -L-	= 51.50'
BED ELEV. @ STA. 15+62.00 -L-	= 41.40'
ROADWAY SLOPE	= 3 : 1

GRADE DATA –L–

P.V.I. = STA. 15+90.00
EL. = 51.88'
V.C. = 195.00'

(+)0.7203% △ (-)0.7038%

HYDRAULIC DATA

DESIGN DISCHARGE	= 510 CFS
FREQUENCY OF DESIGN FLOOD	= 25 YRS.
DESIGN HIGH WATER ELEVATION	= 49.0'
DRAINAGE AREA	= 3.32 SQ. MI.
BASE DISCHARGE (Q100)	= 780 CFS
BASE HIGH WATER ELEVATION	= 49.6'

OVERTOPPING FLOOD DATA

OVERTOPPING DISCHARGE	= 960 CFS
FREQUENCY OF OVERTOPPING FLOOD	= 100± YRS.
OVERTOPPING FLOOD ELEVATION	= 50.0' ✻

✻ OVERTOPPING @ STA. 11+50.0 -L- EXIST. SAG POINT

HORIZONTAL CURVE DATA

P.I. STA. = 16+63.63 -L-
△ = 11°-53'-01.1" (LT.)
D = 5°-45'-30.1"
L = 206.37'
T = 103.56'
R = 995.00'

TOTAL STRUCTURE QUANTITIES

REMOVAL OF EXISTING STRUCTURE	LUMP SUM
ASBESTOS ASSESSMENT	LUMP SUM
CULVERT EXCAVATION	LUMP SUM
FOUNDATION COND. MATERIAL	
PHASE I	54.1 TONS
PHASE II	87.3 TONS
TOTAL	141.4 TONS
CLASS A CONCRETE	
PHASE I	50.6 C.Y.
PHASE II	69.1 C.Y.
PHASE III	90.0 C.Y.
TOTAL	209.7 C.Y.
REINFORCING STEEL	
PHASE I	8,199 LBS.
PHASE II	10,179 LBS.
PHASE III	9,738 LBS.
TOTAL	28,115 LBS.

FOUNDATION NOTE

UNDERCUT MAYBE NECESSARY TO REMOVE VERY SOFT SOIL BENEATH THE FOUNDATION CONDITIONING MATERIAL. A 120 CY OF UNDERCUT EXCAVATION IN THE CONTRACT AS A CONTINGENCY ITEM TO BE USED BY THE DISCRETION OF THE ENGINEER. ALSO INCLUDE A CONTINGENCY QUANTITY OF 180 TONS OF CULVERT UNDERCUT BACKFILL MATERIAL TO BACKFILL UNDERNEATH FOUNDATION CONDITIONING MATERIAL. FOR CULVERT UNDERCUT BACKFILL MATERIAL, SEE THE CULVERT UNDERCUT BACKFILL MATERIAL SPECIAL PROVISION.

NOTES

ASSUMED LIVE LOAD ---------- HL-93 OR ALTERNATE LOADING.

FOR CULVERT DIVERSION DETAILS AND PAY ITEM, SEE EROSION CONTROL PLANS.

FOR CONSTRUCTION SEQUENCE, SEE EROSION CONTROL PLANS.

DESIGN FILL---------- 0.86' (MIN. FILL), 2.59' (MAX. FILL).

FOR OTHER DESIGN DATA AND NOTES SEE STANDARD NOTE SHEET.

3" Ø WEEP HOLES INDICATED TO BE IN ACCORDANCE WITH THE SPECIFICATIONS.

CONCRETE IN CULVERTS TO BE POURED IN THE FOLLOWING ORDER:

PHASE I - CONSTRUCT PARTIAL BARREL 1 (EAST SIDE)

1. WING FOOTINGS AND FLOOR SLAB INCLUDING 4" OF ALL VERTICAL WALLS.
2. THE REMAINING PORTIONS OF THE WALLS, AND WING FULL HEIGHT.
3. DO NOT INSTALL SILLS IN BARREL 1.

PHASE II - CONSTRUCT PARTIAL BARRELS 2 AND 3 (WEST SIDE)

1. WING FOOTINGS AND FLOOR SLAB INCLUDING 4" OF EXTERIOR WALL.
2. THE REMAINING PORTION OF THE WALLS AND WING FULL HEIGHT.
3. INSTALL SILLS IN BARRELS 2 & 3 AT INLET ENDS.
4. INSTALL SILLS IN BARREL 1 AFTER PHASE II CONSTRUCTION IS COMPLETE.

PHASE III - CONSTRUCT ENTIRE ROOF SLAB

1. ROOF SLAB INCLUDING REMAINING PORTION OF WALLS AND HEADWALLS.

THE CONTRACTOR SHALL CHECK THE LENGTH OF CULVERT BEFORE STAKING IT OUT TO MAKE CERTAIN THAT IT WILL PROPERLY TAKE CARE OF THE FILL.

DIMENSIONS FOR WING LAYOUT AS WELL AS ADDITIONAL REINFORCING STEEL EMBEDDED IN BARREL ARE SHOWN ON WING SHEET.

STEEL IN THE BOTTOM SLAB MAY BE SPLICED AT THE PERMITTED CONSTRUCTION JOINT AT THE CONTRACTOR'S OPTION. EXTRA WEIGHT OF STEEL DUE TO THE SPLICES SHALL BE PAID FOR BY CONTRACTOR.

AT THE CONTRACTOR'S OPTION, HE MAY SPLICE THE VERTICAL REINFORCING STEEL IN THE INTERIOR FACE OF EXTERIOR WALL AND BOTH FACES OF INTERIOR WALLS ABOVE LOWER WALL CONSTRUCTION JOINT. THE SPLICE LENGTH SHALL BE AS PROVIDED IN THE SPLICE LENGTH CHART SHOWN ON THE PLANS. EXTRA WEIGHT OF STEEL DUE TO THE SPLICES SHALL BE PAID FOR BY THE CONTRACTOR.

THE EXISTING STRUCTURE CONSISTING OF 2 SPANS, 2 @ 20'-0", 29'-2" CLEAR ROADWAY WIDTH AND PRECAST PRESTRESSED CONCRETE CHANNELS WITH A 2½" AWS; END BENTS AND INTERIOR BENT CONSISTING OF PRECAST PRESTRESSED CONCRETE CAP ON TIMBER PILES AND LOCATED AT THE PROPOSED STRUCTURE SITE SHALL BE REMOVED. THE EXISTING BRIDGE IS PRESENTLY NOT POSTED BELOW THE LEGAL LOAD LIMIT.

REMOVAL OF THE EXISTING BRIDGE SHALL BE PERFORMED SO AS NOT TO ALLOW DEBRIS TO FALL INTO THE WATER. THE CONTRACTOR SHALL REMOVE THE BRIDGE AND SUBMIT PLANS FOR DEMOLITION IN ACCORDANCE WITH ARTICLE 402-2 OF STANDARD SPECIFICATIONS.

A 3 FOOT STRIP OF FILTER FABRIC SHALL BE ATTACHED TO THE FILL FACE OF THE WING COVERING THE ENTIRE LENGTH OF THE EXPANSION JOINT.

NO PRECAST REINFORCED BOX CULVERT OPTION WILL BE ALLOWED.

FOR SUBMITTAL OF WORKING DRAWINGS, SEE SPECIAL PROVISIONS.

FOR ASBESTOS ASSESSMENT FOR BRIDGE DEMOLITION AND RENOVATION ACTIVITIES, SEE SPECIAL PROVISIONS.

FOR FALSEWORK AND FORMWORK, SEE SPECIAL PROVISIONS.

FOR CRANE SAFETY, SEE SPECIAL PROVISIONS.

FOR GROUT FOR STRUCTURES, SEE SPECIAL PROVISIONS

PROJECT NO. BP4.R005
EDGECOMBE COUNTY
STATION: 15+62.00 -L-POC

SHEET 1 OF 8 REPLACES BRIDGE NO. 78

STATE OF NORTH CAROLINA
DEPARTMENT OF TRANSPORTATION
RALEIGH

BARREL STANDARD

TRIPLE 12 FT. X 7 FT. CONCRETE BOX CULVERT 102° SKEW

DOCUMENT NOT CONSIDERED FINAL UNLESS ALL SIGNATURES COMPLETED

CDM Smith
CDM SMITH
5400 Glenwood Avenue, Suite 400
Raleigh, NC 27612-3228
NC COA No. F-1255

DRAWN BY :	JJR	DATE :	3/21
CHECKED BY :	THF	DATE :	4/21
DESIGN ENGINEER :	VDK	DATE :	4/21

DWG. No.

NORTH CAROLINA PROFESSIONAL SEAL 16301 ENGINEER TING-HSIUNG FANG
Ting Fang 60E43C9AEA60462... 9/8/2021

REVISIONS						
NO.	BY:	DATE:	NO.	BY:	DATE:	
1			3			
2			4			

SHEET NO. C-01
TOTAL SHEETS 8

DocuSigned by: Ting Fang 60E43C9AEA60462...

FILE: SPILES
DATE: SDATES
STIMES

DocuSign Envelope ID: 29A96E7B-B08B-4B0C-8EF2-6009A0326F12

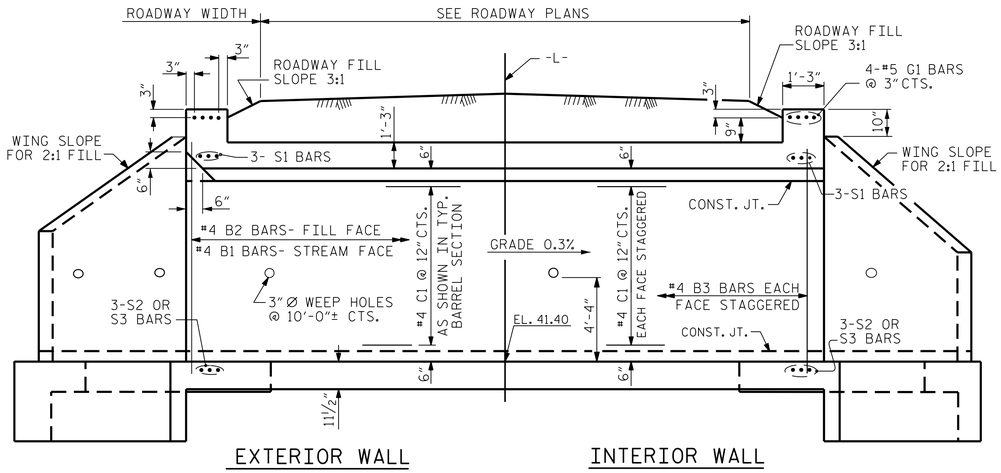

CULVERT SECTION NORMAL TO ROADWAY

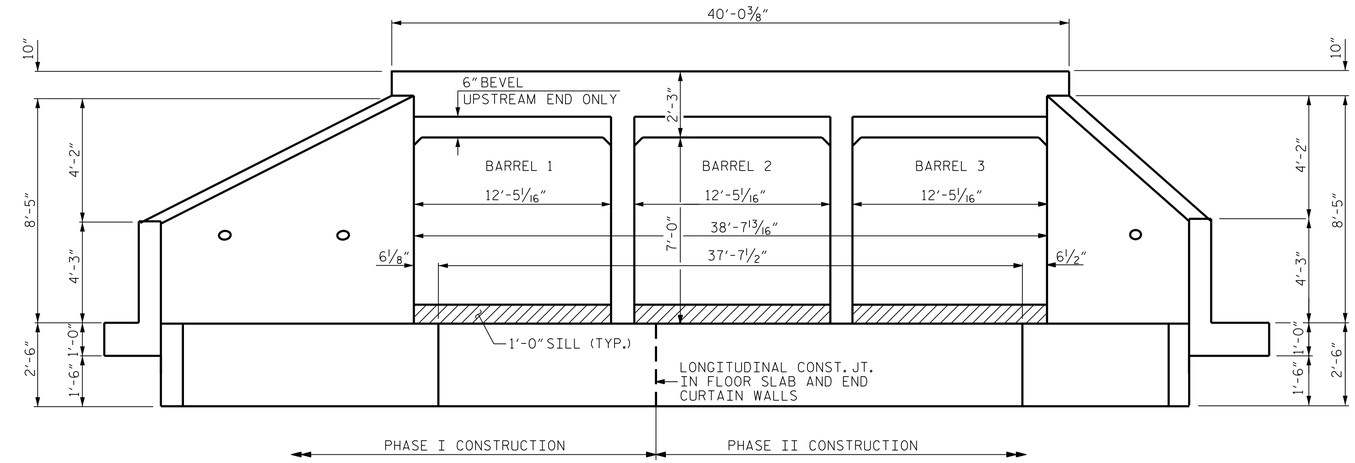

INLET END ELEVATION

NORMAL TO SKEW (LOOKING DOWNSTREAM)

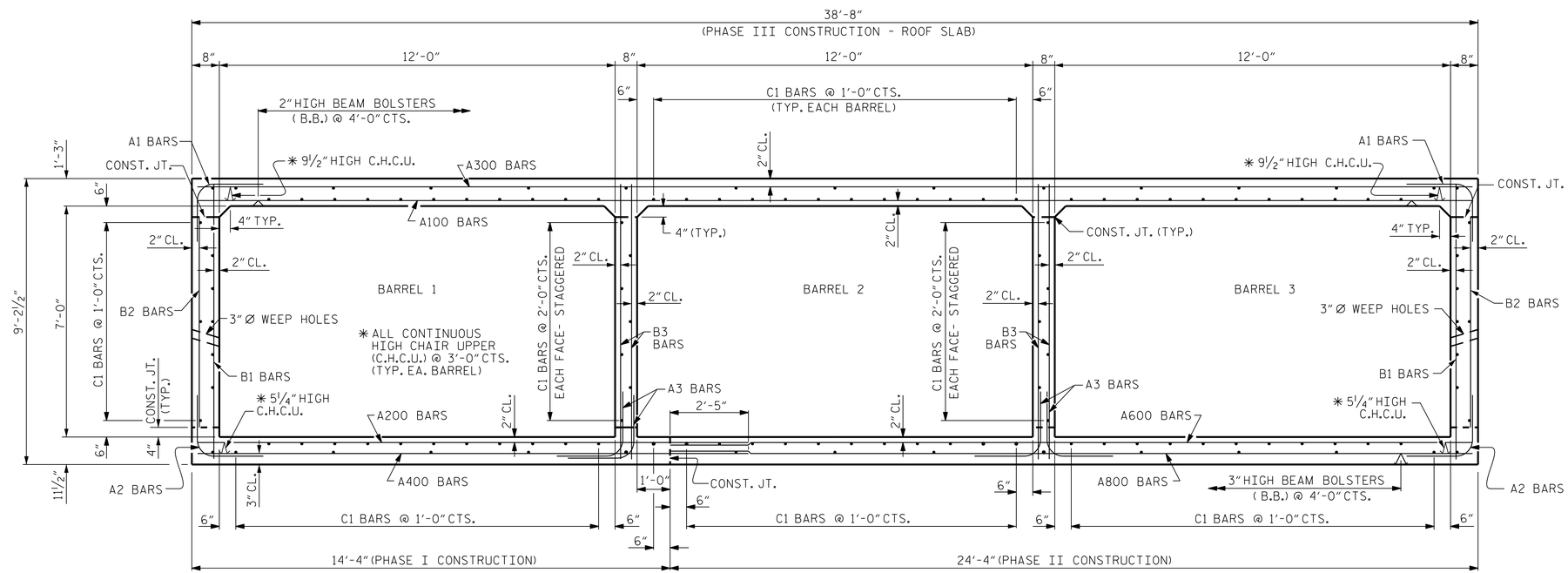

RIGHT ANGLE SECTION OF BARRELS

THERE ARE 128 C1 BARS IN SECTION OF BARRELS.
(LOOKING DOWNSTREAM)

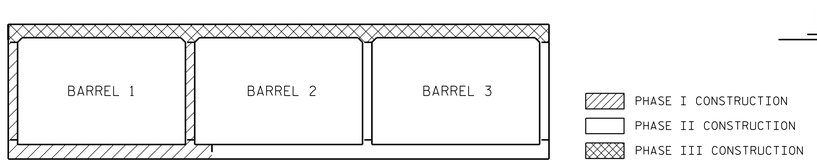

PHASED CONSTRUCTION LAYOUT

LOOKING DOWNSTREAM
PHASE II SHALL NOT STARTED UNTIL PHASE I IS COMPLETE.

PROJECT NO. BP4.R005
EDGECOMBE COUNTY
STATION: 15+62.00 -L-POC

SHEET 2 OF 8

STATE OF NORTH CAROLINA
DEPARTMENT OF TRANSPORTATION
RALEIGH

BARREL STANDARD

TRIPLE 12 FT. X 7 FT. CONCRETE BOX CULVERT

DOCUMENT NOT CONSIDERED FINAL UNLESS ALL SIGNATURES COMPLETED

CDM Smith
CDM SMITH
5400 Glenwood Avenue, Suite 400
Raleigh, NC 27612-3228
NC COA No. F-1255

DRAWN BY : JJR DATE : 3/21
CHECKED BY : THF DATE : 4/21
DESIGN ENGINEER : VDK DATE : 4/21

DWG. No.

NORTH CAROLINA PROFESSIONAL SEAL 16301 ENGINEER TING-SHUANG FANG
60E43C9AEA60462...
9/8/2021

REVISIONS						SHEET NO.
NO.	BY:	DATE:	NO.	BY:	DATE:	C-02
1			3			TOTAL SHEETS
2			4			8

FILE: STYLES
DATE: SDATES STYMES

STD. NO. CB105_3

DocuSign Envelope ID: 29A96E7B-B08B-4B0C-8EF2-6009A0326F12

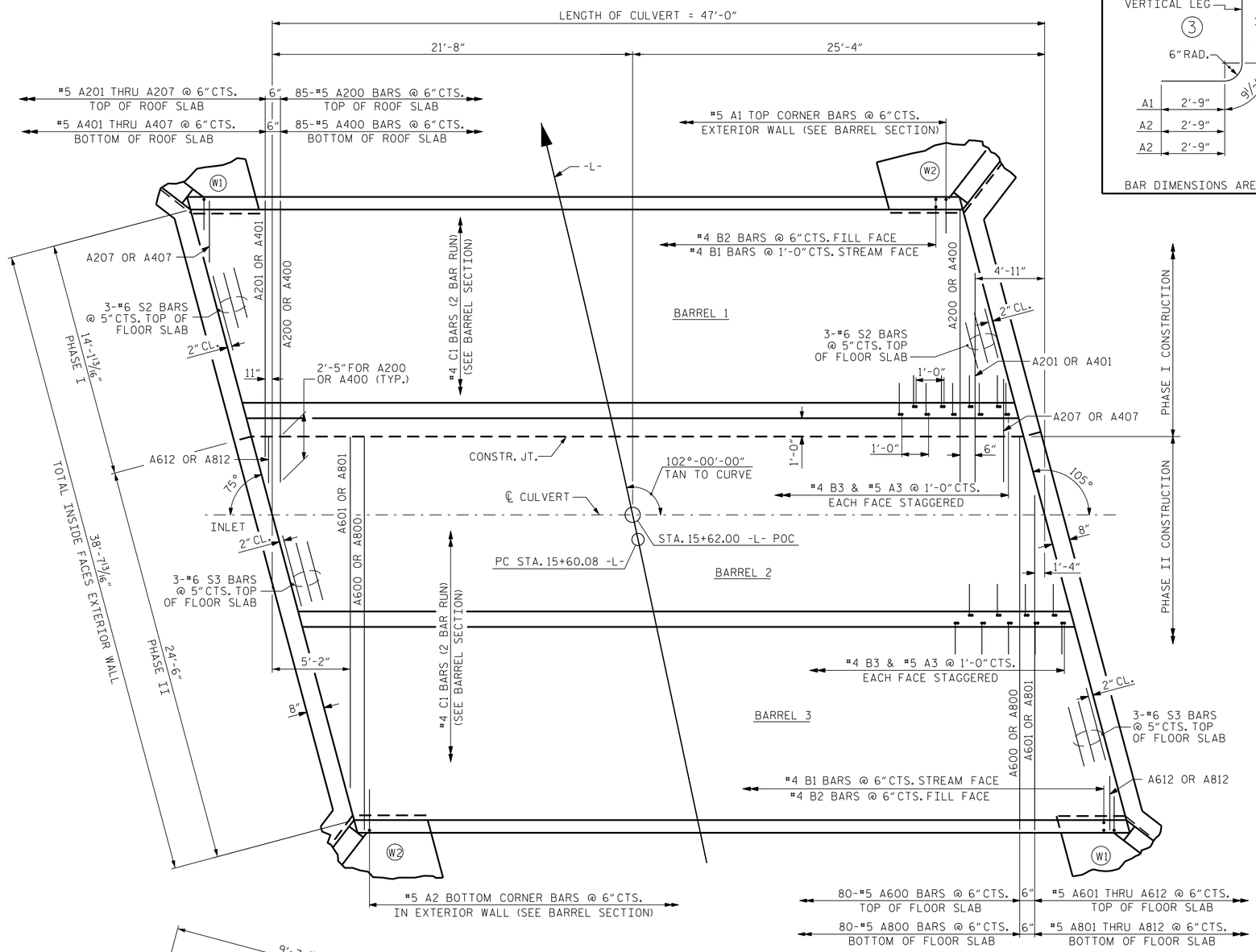

FLOOR SLAB

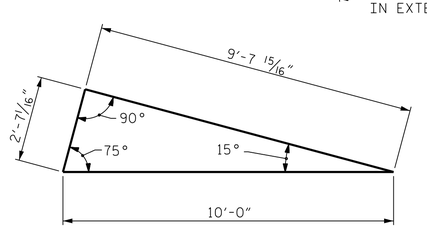

SKEW TRIANGLE

BAR TYPE

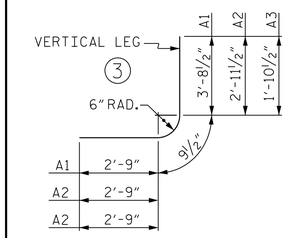

BAR DIMENSIONS ARE OUT TO OUT

REINFORCING BAR SCHEDULE

PHASE II

BAR	NO.	SIZE	TYPE	LENGTH	WEIGHT
A1	93	#5	3	7'-3"	703
A2	93	#5	3	6'-6"	630
A3	94	#5	3	5'-5"	535
B1	48	#4	STR	8'-10"	283
B2	94	#4	STR	6'-4"	398
B3	94	#4	STR	8'-10"	555
A600	80	#5	STR	24'-2"	2016
A601	2	#5	STR	23'-7"	49
A602	2	#5	STR	21'-8"	45
A603	2	#5	STR	19'-10"	41
A604	2	#5	STR	18'-0"	38
A605	2	#5	STR	16'-1"	34
A606	2	#5	STR	14'-3"	30
A607	2	#5	STR	12'-4"	26
A608	2	#5	STR	10'-6"	22
A609	2	#5	STR	8'-8"	18
A610	2	#5	STR	6'-9"	14
A611	2	#5	STR	4'-11"	10
A612	2	#5	STR	3'-0"	6
A800	80	#5	STR	24'-2"	2016
A801	2	#5	STR	23'-7"	49
A802	2	#5	STR	21'-8"	45
A803	2	#5	STR	19'-10"	41
A804	2	#5	STR	18'-0"	38
A805	2	#5	STR	16'-1"	34
A806	2	#5	STR	14'-3"	30
A807	2	#5	STR	12'-4"	26
A808	2	#5	STR	10'-6"	22
A809	2	#5	STR	8'-8"	18
A810	2	#5	STR	6'-9"	14
A811	2	#5	STR	4'-11"	10
A812	2	#5	STR	3'-0"	6
C1	92	#4	STR	24'-3"	1490
D1	10	#6	STR	1'-6"	23
S3	6	#6	STR	25'-0"	225
REINFORCING STEEL				LBS.	9,540

PHASE I

BAR	NO.	SIZE	TYPE	LENGTH	WEIGHT
A1	93	#5	3	7'-3"	703
A2	93	#5	3	6'-6"	630
A3	94	#5	3	5'-5"	535
B1	48	#4	STR	8'-10"	283
B2	94	#4	STR	6'-4"	398
B3	94	#4	STR	8'-10"	555
A200	85	#5	STR	16'-7"	1470
A201	2	#5	STR	15'-1"	31
A202	2	#5	STR	13'-3"	28
A203	2	#5	STR	11'-4"	24
A204	2	#5	STR	9'-6"	20
A205	2	#5	STR	7'-8"	16
A206	2	#5	STR	5'-9"	12
A207	2	#5	STR	3'-11"	8
A400	85	#5	STR	16'-7"	1470
A401	2	#5	STR	15'-1"	31
A402	2	#5	STR	13'-3"	28
A403	2	#5	STR	11'-4"	24
A404	2	#5	STR	9'-6"	20
A405	2	#5	STR	7'-8"	16
A406	2	#5	STR	5'-9"	12
A407	2	#5	STR	3'-11"	8
C1	66	#4	STR	24'-3"	1069
D1	5	#6	STR	1'-6"	11
S2	6	#6	STR	17'-6"	158
REINFORCING STEEL				LBS.	7,560

STRUCTURE QUANTITIES

PHASE I

FOUNDATION COND. MAT'L	54.1	TONS
CULVERT EXCAVATION	LUMP SUM	
CLASS A CONCRETE		
PARTIAL BARREL	39.4	C.Y.
WINGS ETC.	10.8	C.Y.
SILL	0.4	C.Y.
TOTAL	50.6	C.Y.
REINFORCING STEEL		
BARREL & SILL	7,560	LBS.
WINGS ETC.	639	LBS.
TOTAL	8,199	LBS.

STRUCTURE QUANTITIES

PHASE II

FOUNDATION COND. MAT'L	87.3	TONS
CULVERT EXCAVATION	LUMP SUM	
CLASS A CONCRETE		
PARTIAL BARREL	56.1	C.Y.
WINGS ETC.	12.1	C.Y.
SILLS	0.9	C.Y.
TOTAL	69.1	C.Y.
REINFORCING STEEL		
BARREL & SILLS	9,540	LBS.
WINGS ETC.	639	LBS.
TOTAL	10,179	LBS.

SPLICE LENGTHS CHART

BAR	SIZE	SPLICE LENGTH
C1	#4	1'-10"
B3	#4	1'-10"
A200	#5	2'-4"
A400	#5	2'-4"

PROJECT NO. BP4.R005
EDGECOMBE COUNTY
STATION: 15+62.00 -L-POC

SHEET 3 OF 8

STATE OF NORTH CAROLINA
DEPARTMENT OF TRANSPORTATION
RALEIGH

TRIPLE 12 FT. X 7 FT. CONCRETE BOX CULVERT PHASES I & II CONSTRUCTIONS

DOCUMENT NOT CONSIDERED FINAL UNLESS ALL SIGNATURES COMPLETED

CDM Smith
CDM SMITH
5400 Glenwood Avenue, Suite 400
Raleigh, NC 27612-3228
NC COA No. F-1255

DRAWN BY : JJR DATE : 3/21
CHECKED BY : THF DATE : 4/21
DESIGN ENGINEER : VDK DATE : 4/21

DWG. No.

NORTH CAROLINA PROFESSIONAL SEAL 16301 ENGINEER TING-HSIUNG FANG
Ting Fang
60E43C9AEA60462...
9/8/2021

REVISIONS						SHEET NO.
NO.	BY:	DATE:	NO.	BY:	DATE:	C-03
1			3			TOTAL SHEETS
2			4			8

FILE: STILES
DATE: SDATES STIMES

DocuSign Envelope ID: 29A96E7B-B08B-4B0C-8EF2-6009A0326F12

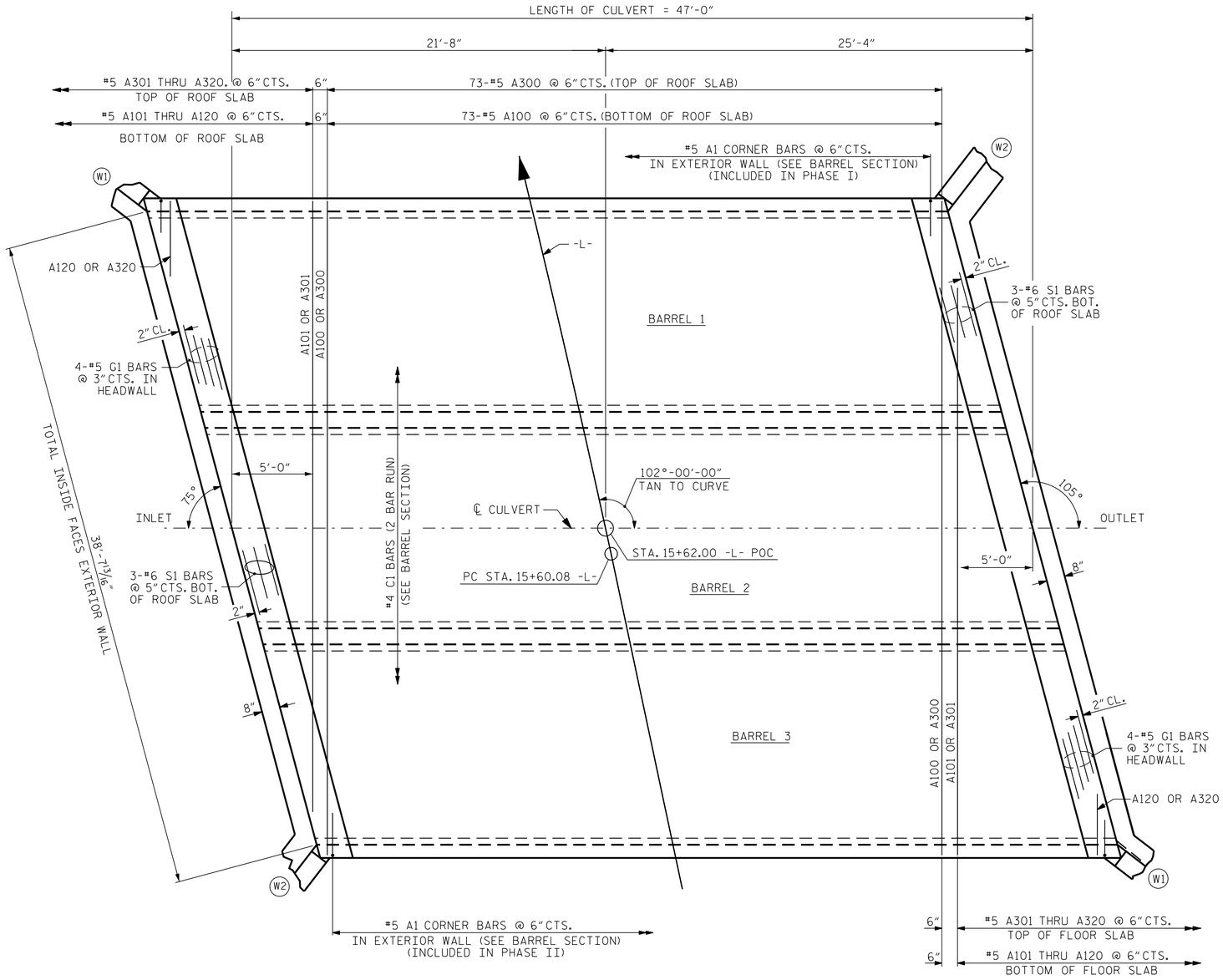

ROOF SLAB

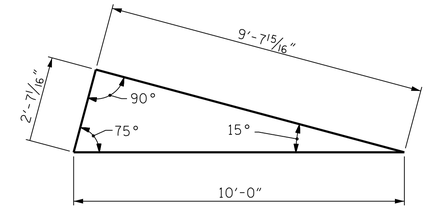

SKEW TRIANGLE

STRUCTURE QUANTITIES		
PHASE III		
CLASS A CONCRETE		
ROOF SLAB	86.3	C.Y.
HEADWALLS	3.7	C.Y.
TOTAL	90.0	C.Y.
REINFORCING STEEL		
ROOF SLAB & HEADWALLS	9,738	LBS.

REINFORCING BAR SCHEDULE

PHASE III

BAR	NO.	SIZE	TYPE	LENGTH	WEIGHT
A100	73	#5	STR	38'-4"	2919
A101	2	#5	STR	37'-2"	78
A102	2	#5	STR	35'-4"	74
A103	2	#5	STR	33'-5"	70
A104	2	#5	STR	31'-7"	66
A105	2	#5	STR	29'-9"	62
A106	2	#5	STR	27'-10"	58
A107	2	#5	STR	26'-0"	54
A108	2	#5	STR	24'-1"	50
A109	2	#5	STR	22'-6"	47
A110	2	#5	STR	20'-4"	42
A111	2	#5	STR	18'-6"	39
A112	2	#5	STR	16'-8"	35
A113	2	#5	STR	14'-9"	31
A114	2	#5	STR	12'-11"	27
A115	2	#5	STR	11'-1"	23
A116	2	#5	STR	9'-2"	19
A117	2	#5	STR	7'-4"	15
A118	2	#5	STR	5'-6"	11
A119	2	#5	STR	3'-7"	7
A120	2	#5	STR	1'-9"	4
A300	73	#5	STR	38'-4"	2919
A301	2	#5	STR	37'-2"	78
A302	2	#5	STR	35'-4"	74
A303	2	#5	STR	33'-5"	70
A304	2	#5	STR	31'-7"	66
A305	2	#5	STR	29'-9"	62
A306	2	#5	STR	27'-10"	58
A307	2	#5	STR	26'-0"	54
A308	2	#5	STR	24'-1"	50
A309	2	#5	STR	22'-6"	47
A310	2	#5	STR	20'-4"	42
A311	2	#5	STR	18'-6"	39
A312	2	#5	STR	16'-8"	35
A313	2	#5	STR	14'-9"	31
A314	2	#5	STR	12'-11"	27
A315	2	#5	STR	11'-1"	23
A316	2	#5	STR	9'-2"	19
A317	2	#5	STR	7'-4"	15
A318	2	#5	STR	5'-6"	11
A319	2	#5	STR	3'-7"	7
A320	2	#5	STR	1'-9"	4
C1	98	#4	STR	24'-3"	1588
G1	8	#5	STR	39'-8"	331
S1	6	#6	STR	39'-8"	357
REINFORCING STEEL				LBS.	9,738

SPLICE LENGTHS CHART

BAR	SIZE	SPLICE LENGTH
C1	#4	1'-10"

PROJECT NO. BP4.R005

EDGECOMBE COUNTY

STATION: 15+62.00 -L-POC

SHEET 4 OF 8

STATE OF NORTH CAROLINA
DEPARTMENT OF TRANSPORTATION
RALEIGH

TRIPLE 12 FT. X 7 FT. CONCRETE BOX CULVERT PHASE III CONSTRUCTION

DOCUMENT NOT CONSIDERED FINAL UNLESS ALL SIGNATURES COMPLETED

CDM Smith
CDM SMITH
5400 Glenwood Avenue, Suite 400
Raleigh, NC 27612-3228
NC COA No. F-1255

DRAWN BY : JJR DATE : 3/21
CHECKED BY : THF DATE : 4/21
DESIGN ENGINEER : VDK DATE : 4/21

DWG. No.

NORTH CAROLINA PROFESSIONAL SEAL 16301 ENGINEER TING HSIUNG FANG
Ting Fang
DocuSigned by: 9E7C2C0A6A0462...
9/8/2021

REVISIONS							
NO.	BY:	DATE:	NO.	BY:	DATE:	SHEET NO.	C-04
1			3			TOTAL SHEETS	8
2			4				

FILE: SPILES
DATE: SDATES
STAKES

DocuSign Envelope ID: D4AAC9AD-B3B3-411F-92A0-80BD0BDEE4DA

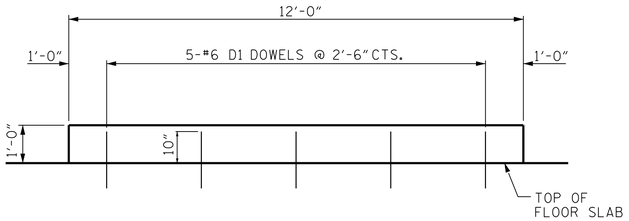

CONCRETE SILL DETAIL

AT INLET END IN ALL BARRELS

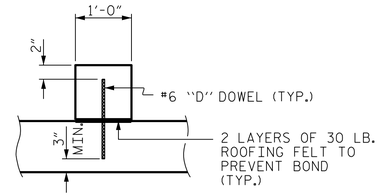

SECTION THROUGH SILL

DOWELS MAY BE PUSHED INTO GREEN CONCRETE AFTER SLAB HAS BEEN FLOAT FINISHED.

THE CONTRACTOR'S ATTENTION IS CALLED TO THE FACT THAT THE NATIVE MATERIAL BACKFILL SHALL BE PLACED PRIOR TO THE CASTING OF THE ROOF SLAB.

NOTES:

CULVERT FLOOR SLAB IS BURIED 1.0' BELOW EXISTING STREAM BED. BACKFILL WITH NATIVE MATERIAL TO SILL HEIGHT IN ALL BARRELS.

NATIVE MATERIAL BETWEEN SILLS IN THE CULVERT SHALL PROVIDE A CONTINUOUS LOW FLOW CHANNEL.

NATIVE MATERIAL CONSISTS OF MATERIAL THAT IS EXCAVATED FROM THE STREAM OR FLOODPLAIN AT THE PROJECT SITE DURING CONSTRUCTION. ONLY MATERIAL THAT IS EXCAVATED FROM THE STREAM BED MAY BE USED TO LINE CULVERT BARRELS. RIP RAP MAY BE USED TO SUPPLEMENT THE NATIVE MATERIAL IN BARRELS.

NATIVE MATERIAL IS SUBJECT TO APPROVAL BY THE ENGINEER AND MAY BE SUBJECT TO PERMIT CONDITIONS.

SILLS ARE TO BE 1 FOOT, CAST SEPARATELY AND ATTACHED BY DOWELS.

TOP OF SILLS SHOULD MATCH STREAM BED ELEVATION.

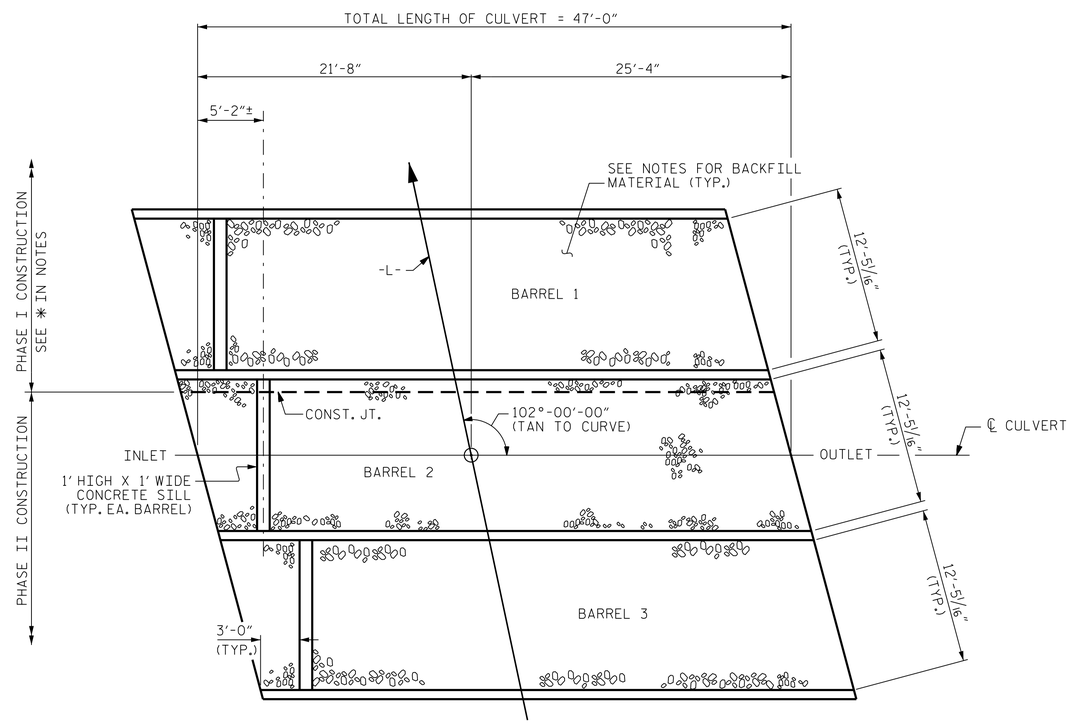

PLAN

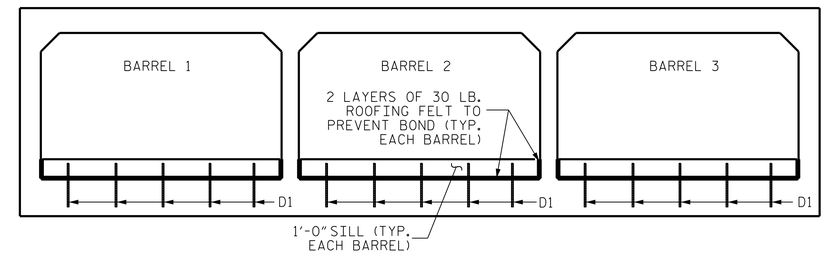

ELEVATION

SILLS AT INLET END ONLY

PROJECT NO. BP4.R005

EDGECOMBE COUNTY

STATION: 15+62.00 -L-POC

SHEET 5 OF 8

STATE OF NORTH CAROLINA
DEPARTMENT OF TRANSPORTATION
RALEIGH

DETAILS OF SILLS FOR CONCRETE BOX CULVERT

DOCUMENT NOT CONSIDERED FINAL UNLESS ALL SIGNATURES COMPLETED

CDM Smith

CDM SMITH
5400 Glenwood Avenue, Suite 400
Raleigh, NC 27612-3228
NC COA No. F-1255

DRAWN BY : JJR DATE : 3/21
CHECKED BY : THF DATE : 4/21
DESIGN ENGINEER : VDK DATE : 4/21

DWG. No.

NORTH CAROLINA PROFESSIONAL SEAL 16301 ENGINEER TING-HSIUNG FANG

Ting Fang
60E43C9AEA80462...
11/12/2021

REVISIONS						SHEET NO.
NO.	BY:	DATE:	NO.	BY:	DATE:	C-05
1			3			TOTAL SHEETS
2			4			8

FILE: STILES
DATE: SDATES STIMES

DocuSign Envelope ID: 29A96E7B-B08B-4B0C-8EF2-6009A0326F12

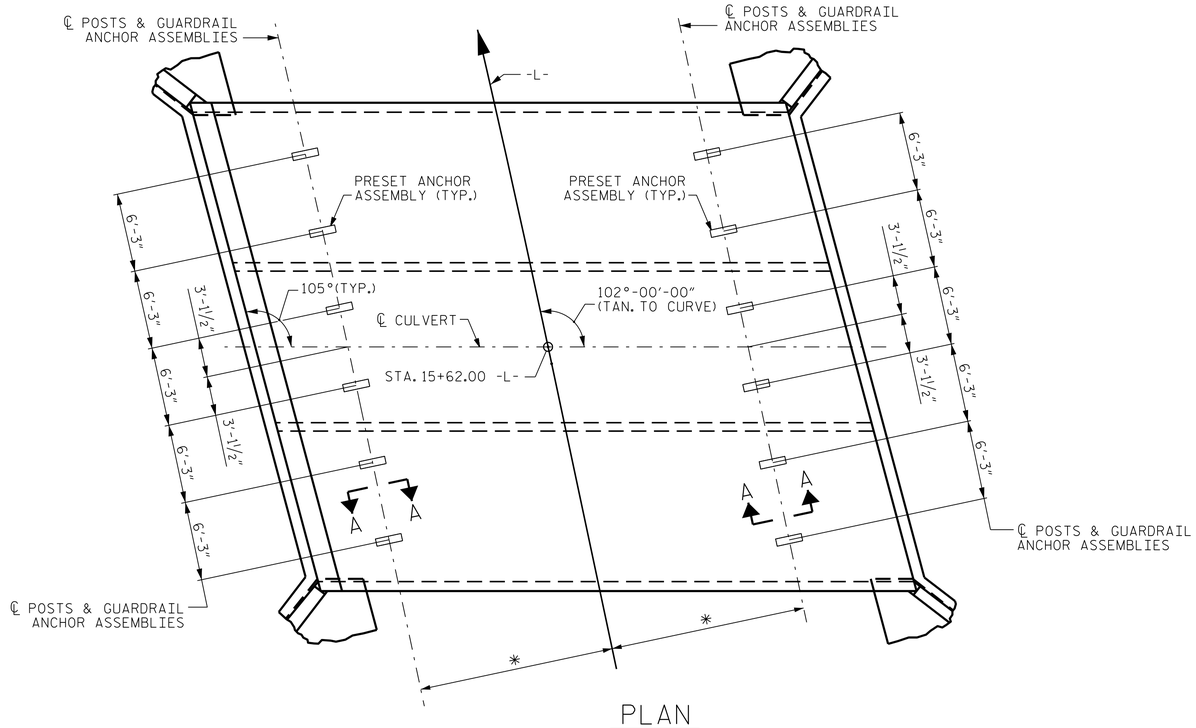

PLAN

* THIS DIMENSION TO BE VERIFIED BY THE RESIDENT ENGINEER.

NOTES

THE GUARDRAIL ANCHOR ASSEMBLY FOR CULVERTS SHALL CONSIST OF THE FOLLOWING COMPONENTS :

A. FERRULES SHALL BE MADE FROM STEEL MEETING THE REQUIREMENTS OF AASHTO M169, GRADE 12L14 AND SHALL HAVE A MINIMUM LENGTH OF THREADS OF 2½".

B. 4 - 1"Ø X 2¼" BOLTS WITH WASHERS, BOLTS SHALL CONFORM TO THE REQUIREMENTS OF ASTM A307. BOLTS AND WASHERS SHALL BE GALVANIZED. (AT THE CONTRACTOUSED AS AN ALTERNATE FOR THE 1"Ø X 2¼" GALVANIZED BOLTS ANDR'S OPTION, STAINLESS STEEL BOLTS AND WASHERS MAY BE WASHERS. THEY SHALL CONFORM TO OR EXCEED THE MECHANICAL REQUIREMENTS OF ASTM A307. THE USE OF THIS ALTERNATE SHALL BE APPROVED BY THE ENGINEER.)

C. WIRE STRUTS SHOWN IN THE GUARDRAIL ANCHOR ASSEMBLY FOR CULVERTS DETAIL ARE MINIMUM ALLOWABLE SIZE AND SHALL HAVE A MINIMUM TENSILE STRENGTH OF 100,000 P.S.I. AS AN OPTION, A 7/16"Ø WIRE STRUT WITH A MINIMUM TENSILE STRENGTH OF 90,000 PSI IS ACCEPTABLE.

GUARDRAIL ANCHOR ASSEMBLY WITH BOLTS SHALL BE ASSEMBLED IN THE SHOP. BOLT THREADS MAY BE RECUT AS NECESSARY TO INSURE FIT.

THE COST OF THE GUARDRAIL ANCHOR ASSEMBLY FOR CULVERTS COMPLETE IN PLACE, SHALL BE INCLUDED IN THE UNIT CONTRACT PRICE BID FOR CLASS "A" CONCRETE.

FERRULES TO BE PLUGGED DURING POURING OF SLAB AS RECOMMENDED BY THE MANUFACTURER.

AT THE CONTRACTOR'S OPTION, FERRULES WITH OPEN OR CLOSED ENDS MAY BE USED.

PAYMENT FOR GUARDRAIL, POSTS, AND POST BASE PLATES IS INCLUDED IN ROADWAY PAY ITEMS.

SLAB REINFORCING STEEL MAY BE SHIFTED AS NECESSARY TO CLEAR GUARDRAIL ANCHOR ASSEMBLY. CARE SHOULD BE TAKEN TO KEEP THE SHIFTING OF REINFORCING STEEL TO A MINIMUM.

THE CONTRACTOR MAY USE ADHESIVELY ANCHORED ANCHOR BOLTS IN PLACE OF GUARDRAIL ANCHOR ASSEMBLY. LEVEL TWO FIELD TESTING IS REQUIRED, AND THE YIELD LOAD OF THE 1"Ø BOLT IS 21.8 KIPS. FOR ADHESIVELY ANCHORED ANCHOR BOLTS OR DOWELS, SEE STANDARD SPECIFICATIONS.

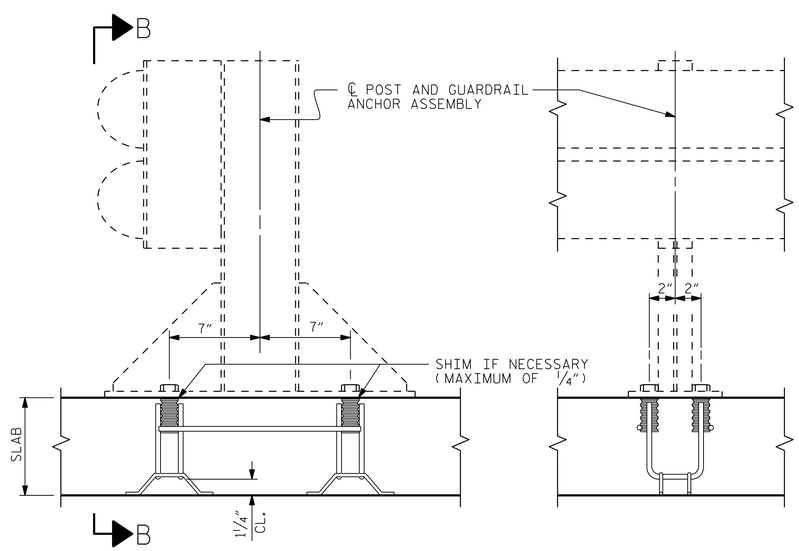

SECTION A-A

SECTION B-B

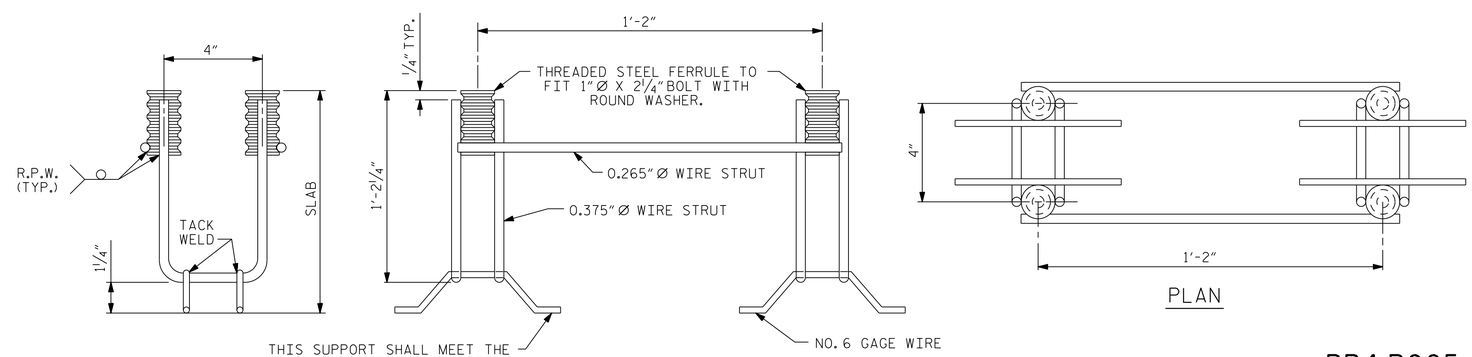

ELEVATION

SIDE VIEW

PLAN

GUARDRAIL ANCHOR ASSEMBLY FOR CULVERTS

PROJECT NO. BP4.R005
EDGECOMBE COUNTY
STATION: 15+62.00 -L-POC

SHEET 6 OF 8

STATE OF NORTH CAROLINA
DEPARTMENT OF TRANSPORTATION
RALEIGH
STANDARD
ANCHORAGE DETAILS FOR GUARDRAIL ANCHOR ASSEMBLY FOR CULVERT

DOCUMENT NOT CONSIDERED FINAL UNLESS ALL SIGNATURES COMPLETED

CDM Smith
CDM SMITH
5400 Glenwood Avenue, Suite 400
Raleigh, NC 27612-3228
NC COA No. F-1255

DRAWN BY : JJR DATE : 3/21
CHECKED BY : THF DATE : 4/21
DESIGN ENGINEER : VDK DATE : 4/21

DWG. No.

NORTH CAROLINA PROFESSIONAL SEAL 16301 ENGINEER TING-HSIUNG FANG
Ting Fang
DocuSigned by: 5F8D2D2D4452...
3/8/2021

REVISIONS						SHEET NO.
NO.	BY:	DATE:	NO.	BY:	DATE:	C-06
1			3			TOTAL SHEETS
2			4			8

STD. NO. GRA1

FILE: SFILES STMES
DATE: $DATES

DocuSign Envelope ID: 29A96E7B-B08B-4B0C-8EF2-6009A0326F12

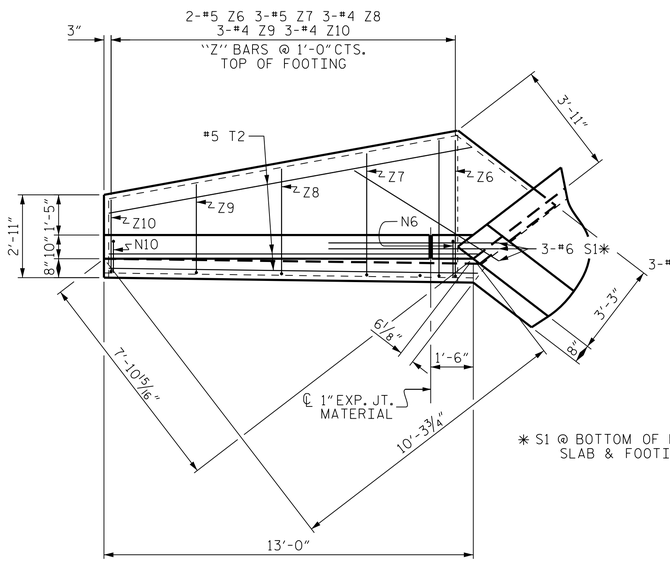

PLAN W1

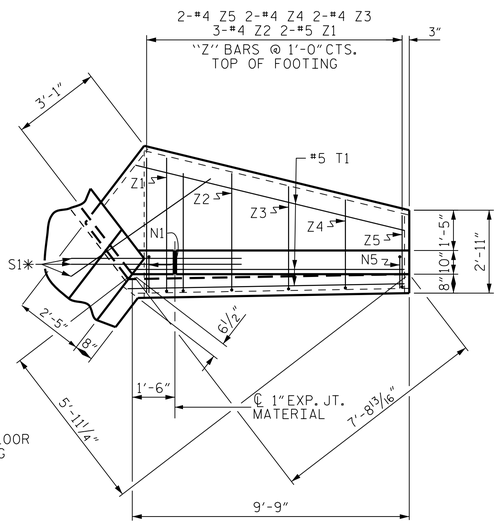

PLAN W2

* S1 @ BOTTOM OF FLOOR SLAB & FOOTING

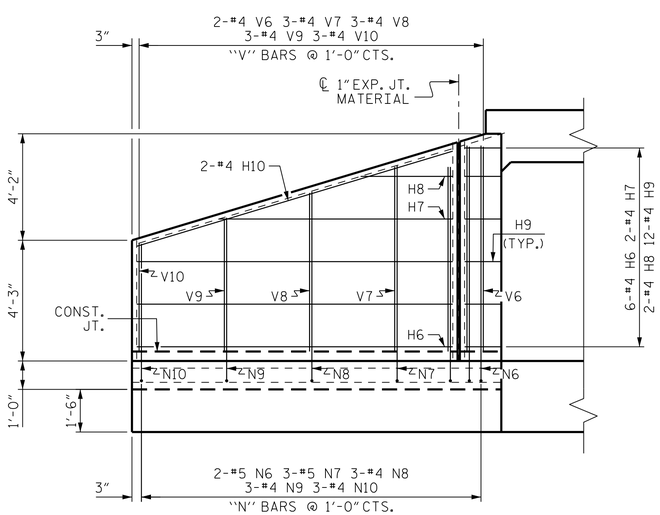

ELEVATION W1

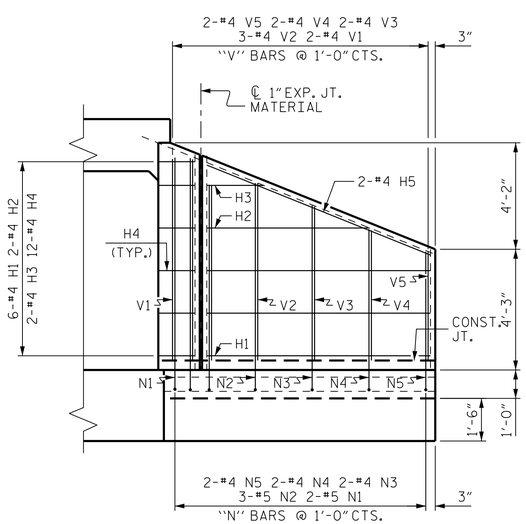

ELEVATION W2

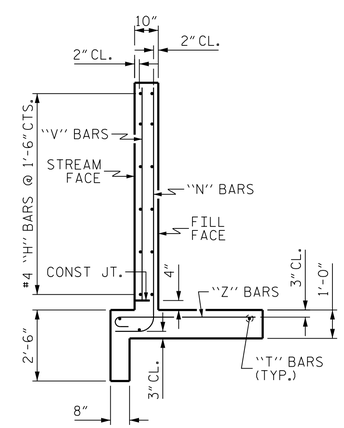

TYPICAL WING SECTION

BAR TYPES

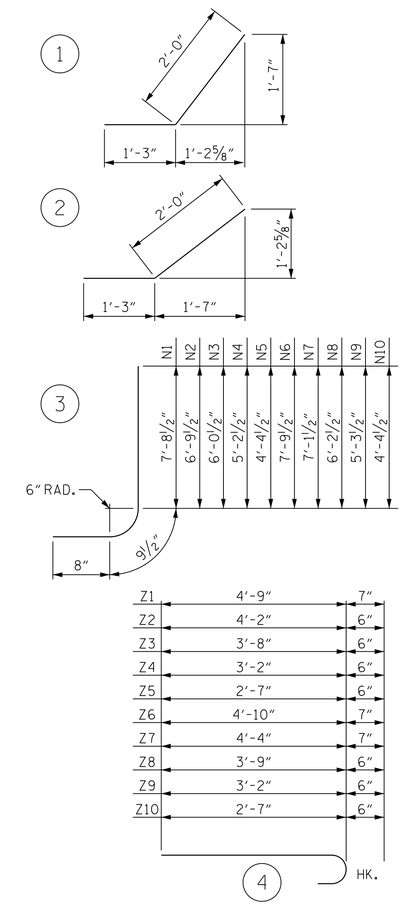

ALL BAR DIMENSIONS ARE OUT TO OUT.

BILL OF MATERIAL

BAR	NO.	SIZE	TYPE	LENGTH	WEIGHT
H1	12	#4	STR	7'-10"	63
H2	4	#4	STR	5'-8"	15
H3	4	#4	STR	2'-0"	5
H4	24	#4	1	3'-3"	52
H5	4	#4	STR	8'-5"	22
H6	12	#4	STR	11'-1"	89
H7	4	#4	STR	8'-2"	22
H8	4	#4	STR	3'-3"	9
H9	24	#4	2	3'-3"	52
H10	4	#4	STR	11'-7"	31
N1	4	#5	3	9'-2"	38
N2	6	#5	3	8'-3"	52
N3	4	#4	3	7'-6"	20
N4	4	#4	3	6'-8"	18
N5	4	#4	3	5'-10"	16
N6	4	#5	3	9'-3"	39
N7	6	#5	3	8'-7"	54
N8	6	#4	3	7'-8"	31
N9	6	#4	3	6'-9"	27
N10	6	#4	3	5'-10"	23
S1	12	#6	STR	6'-0"	108
T1	6	#5	STR	9'-9"	61
T2	6	#5	STR	13'-0"	81
V1	4	#4	STR	7'-1"	19
V2	6	#4	STR	6'-3"	25
V3	4	#4	STR	5'-5"	14
V4	4	#4	STR	4'-7"	12
V5	4	#4	STR	3'-10"	10
V6	4	#4	STR	7'-3"	19
V7	6	#4	STR	6'-6"	26
V8	6	#4	STR	5'-7"	22
V9	6	#4	STR	4'-8"	19
V10	6	#4	STR	3'-10"	15
Z1	4	#5	4	5'-4"	22
Z2	6	#4	4	4'-8"	19
Z3	4	#4	4	4'-2"	11
Z4	4	#4	4	3'-8"	10
Z5	4	#4	4	3'-1"	8
Z6	4	#5	4	5'-5"	23
Z7	6	#5	4	4'-11"	31
Z8	6	#4	4	4'-3"	17
Z9	6	#4	4	3'-8"	15
Z10	6	#4	4	3'-1"	12

REINFORCING STEEL FOR 4 WINGS 1277 LBS

CLASS A CONCRETE
- 4 WINGS 18.2 CY
- 2 HEADWALLS 3.7 CY
- 2 END CURTAIN WALLS 4.6 CY
- TOTAL 26.5 CY

PHASE I

CLASS A CONCRETE
- 2 WINGS 9.10 CY
- PARTIAL CURTAIN WALLS 1.68 CY
- TOTAL 10.78 CY

PHASE II

CLASS A CONCRETE
- 2 WINGS 9.10 CY
- PARTIAL CURTAIN WALLS 2.96 CY
- TOTAL 12.06 CY

PROJECT NO. BP4.R005
EDGECOMBE COUNTY
STATION: 15+62.00 -L-POC

SHEET 7 OF 8

STATE OF NORTH CAROLINA
DEPARTMENT OF TRANSPORTATION
RALEIGH

STANDARD WINGS FOR CONCRETE BOX CULVERT

H = 7'-0" SLOPE = 2:1

105° SKEW

DOCUMENT NOT CONSIDERED FINAL UNLESS ALL SIGNATURES COMPLETED

CDM Smith
CDM SMITH
5400 Glenwood Avenue, Suite 400
Raleigh, NC 27612-3228
NC COA No. F-1255

DRAWN BY : JJR DATE : 3/21
CHECKED BY : THF DATE : 4/21
DESIGN ENGINEER : VDK DATE : 4/21

DWG. No.

NORTH CAROLINA PROFESSIONAL SEAL 16301 ENGINEER TING HSIUNG FANG
DOCUSIGNED by: Ting Fang
DocuSign Envelope ID: 29A96E7B-B08B-4B0C-8EF2-6009A0326F12
9/8/2021

REVISIONS							
NO.	BY:	DATE:	NO.	BY:	DATE:	SHEET NO.	C-07
1			3			TOTAL SHEETS	8
2			4				

STD. NO. CW10507

FILE: STILES
DATE: STATES

DocuSign Envelope ID: 29A96E7B-B08B-4B0C-8EF2-6009A0326F12

LOAD AND RESISTANCE FACTOR RATING (LRFR) SUMMARY FOR REINFORCED CONCRETE BOX CULVERTS

LEVEL		VEHICLE	WEIGHT (W) (TONS)	CONTROLLING LOAD RATING (#)	MINIMUM RATING FACTORS (RF)	TONS = W × RF	STRENGTH I LIMIT STATE									COMMENT NUMBER
							LIVE-LOAD FACTORS (γ_{LL})	MOMENT				SHEAR				
								RATING FACTOR	BOX NO.	ELEMENT TYPE	DISTANCE FROM LEFT END OF ELEMENT (ft)	RATING FACTOR	BOX NO.	ELEMENT TYPE	DISTANCE FROM LEFT END OF ELEMENT (ft)	
DESIGN LOAD RATING		HL-93 (INVENTORY)	N/A	1	1.04	--	1.75	1.26	1	TOP SLAB	6.00	1.04	1	TOP SLAB	12.00	
		HL-93 (OPERATING)	N/A		1.34	--	1.35	1.63	1	TOP SLAB	6.00	1.34	1	TOP SLAB	12.00	
		HS-20 (INVENTORY)	36.000	2	1.08	38.88	1.75	1.31	1	TOP SLAB	6.00	1.08	1	TOP SLAB	12.00	
		HS-20 (OPERATING)	36.000		1.40	50.40	1.35	1.70	1	TOP SLAB	6.00	1.40	1	TOP SLAB	12.00	
LEGAL LOAD RATING	SINGLE VEHICLE (SV)	SNSH	13.500		2.39	32.27	1.40	2.62	1	TOP SLAB	6.00	2.39	1	TOP SLAB	12.00	
		SNGARBS2	20.000		2.21	44.20	1.40	2.45	1	TOP SLAB	6.00	2.21	1	TOP SLAB	12.00	
		SNAGRIS2	22.000		2.34	51.48	1.40	2.62	1	TOP SLAB	6.00	2.34	1	TOP SLAB	12.00	
		SNCOTTS3	27.250	3	1.28	34.88	1.40	1.57	1	TOP SLAB	6.00	1.28	1	TOP SLAB	12.00	
		SNAGGRS4	34.925		1.54	53.78	1.40	1.85	1	BOTTOM SLAB	12.00	1.54	1	TOP SLAB	12.00	
		SNS5A	35.550		1.43	50.84	1.40	1.79	1	TOP SLAB	6.00	1.43	1	TOP SLAB	12.00	
		SNS6A	39.950		1.42	56.73	1.40	1.64	1	BOTTOM SLAB	12.00	1.42	1	TOP SLAB	12.00	
		SNS7B	42.000		1.42	59.64	1.40	1.57	1	BOTTOM SLAB	12.00	1.42	1	TOP SLAB	12.00	
	TRUCK TRACTOR SEMI-TRAILER (TTST)	TNAGRIT3	33.000		2.00	66.00	1.40	2.01	1	BOTTOM SLAB	12.00	2.00	1	BOTTOM SLAB	12.00	
		TNT4A	33.075		1.50	49.61	1.40	1.87	1	TOP SLAB	6.00	1.50	1	TOP SLAB	12.00	
		TNT6A	41.600		1.42	59.07	1.40	1.58	1	BOTTOM SLAB	12.00	1.42	1	TOP SLAB	12.00	
		TNT7A	42.000		1.45	60.90	1.40	1.58	1	BOTTOM SLAB	12.00	1.45	1	TOP SLAB	12.00	
		TNT7B	42.000		1.47	61.74	1.40	1.64	1	BOTTOM SLAB	12.00	1.47	1	TOP SLAB	12.00	
		TNAGRIT4	43.000		1.46	62.78	1.40	1.55	1	BOTTOM SLAB	12.00	1.46	1	TOP SLAB	12.00	
		TNAGT5A	45.000		1.45	65.25	1.40	1.48	1	BOTTOM SLAB	12.00	1.45	1	TOP SLAB	12.00	
		TNAGT5B	45.000		1.42	63.90	1.40	1.47	1	BOTTOM SLAB	12.00	1.42	1	TOP SLAB	12.00	

LOAD FACTORS:

DESIGN LOAD RATING FACTORS

LOAD TYPE	MAX FACTOR	MIN FACTOR
DC	1.25	0.90
DW	1.50	0.65
EV	1.30	0.90
EH	1.35	0.90
ES	1.35	0.90
LS	1.75	--
WA	1.00	--

NOTE:

RATING FACTORS ARE BASED ON THE STRENGTH I LIMIT STATE.

COMMENTS:

1.
2.
3.
4.

(#) CONTROLLING LOAD RATING

(1) DESIGN LOAD RATING (HL-93)

(2) DESIGN LOAD RATING (HS-20)

(3) LEGAL LOAD RATING **

** SEE CHART FOR VEHICLE TYPE

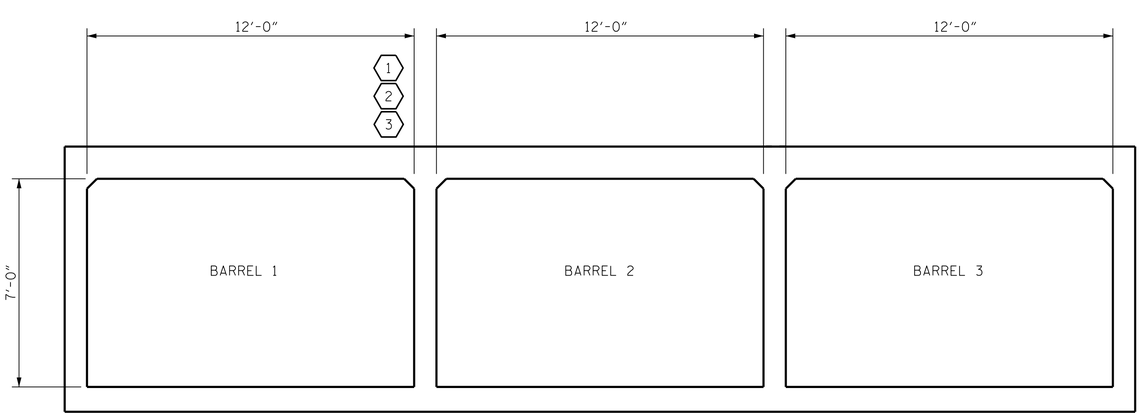

LRFR SUMMARY

(LOOKING DOWNSTREAM)

PROJECT NO. BP4.R005

EDGECOMBE COUNTY

STATION: 15+62.00 -L-POC

SHEET 8 OF 8

STATE OF NORTH CAROLINA
DEPARTMENT OF TRANSPORTATION
RALEIGH

STANDARD
LRFR SUMMARY FOR REINFORCED CONCRETE BOX CULVERTS
(NON-INTERSTATE TRAFFIC)

DOCUMENT NOT CONSIDERED FINAL UNLESS ALL SIGNATURES COMPLETED

CDM Smith
CDM SMITH
5400 Glenwood Avenue, Suite 400
Raleigh, NC 27612-3228
NC COA No. F-1255

DRAWN BY : JJR DATE : 3/21
CHECKED BY : THF DATE : 4/21
DESIGN ENGINEER : VDK DATE : 4/21

DWG. No.

NORTH CAROLINA PROFESSIONAL SEAL 16301 ENGINEER TING FANG
Ting Fang
9/8/2021
DocuSigned by: 9E4A62AEA60462...

REVISIONS						SHEET NO.
NO.	BY:	DATE:	NO.	BY:	DATE:	C-08
1			3			TOTAL SHEETS
2			4			8

STD. NO. LRFR5

FILE: SFILES STMES
DATE: SDATES