This electronic collection of documents is provided for the convenience of the user and is Not a Certified Document –

The documents contained herein were originally issued and sealed by the individuals whose names and license numbers appear on each page, on the dates appearing with their signature on that page.
This file or an individual page shall not be considered a certified document.

STATE OF NORTH CAROLINA
DIVISION OF HIGHWAYS

TRANSPORTATION MANAGEMENT PLAN

WAYNE COUNTY

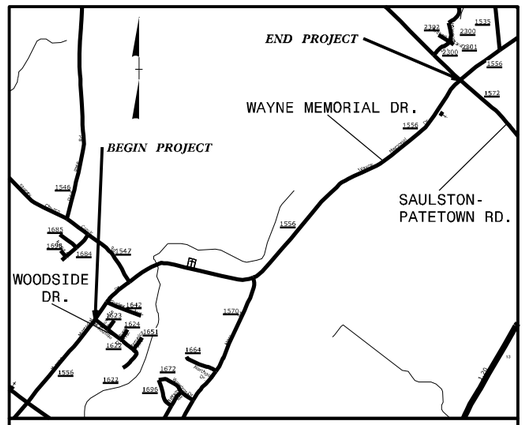

VICINITY MAP

LOCATION: SR 1556 (WAYNE MEMORIAL DR.) FROM SR 1622 (WOODSIDE DR.) TO SR 1572 (SAULSTON–PATETOWN RD.)

TYPE OF WORK: WIDENING, SHOULDERS, SUPERELEVATION REVISIONS, PAVEMENT MARKINGS, AND SIGNING

INDEX OF SHEETS

SHEET NO.	TITLE
TMP-1	TITLE SHEET, VICINITY MAP, AND INDEX OF SHEETS
TMP-1A	LIST OF APPLICABLE ROADWAY STANDARD DRAWINGS, AND LEGEND
TMP-1B	GENERAL NOTES & PHASING
TMP-2	TEMPORARY TRAFFIC CONTROL DETOUR DETAIL

SHEET NO.
TMP–1

W–5500

TIP PROJECT:

WORK ZONE SAFETY & MOBILITY
"from the MOUNTAINS to the COAST"

N.C.D.O.T. WORK ZONE TRAFFIC CONTROL
1561 MAIL SERVICE CENTER (MSC) RALEIGH, NC 27699–1561
750 N. GREENFIELD PARKWAY, GARNER, NC 27529 (DELIVERY)
PHONE: (919) 773–2800 FAX: (919) 771–2745

J. S. BOURNE, P.E. — STATE TRAFFIC MANAGEMENT ENGINEER
J. S. KITE, P.E. — TRAFFIC CONTROL PROJECT ENGINEER
M. V. SPRINGER, P.E. — TRAFFIC CONTROL PROJECT DESIGN ENGINEER
_____ — TRAFFIC CONTROL DESIGN ENGINEER

DOCUMENT NOT CONSIDERED FINAL
UNLESS ALL SIGNATURES COMPLETED

APPROVED: Steve Kite
DocuSigned by:
E27CE30E1DFC442...
DATE: 11/8/2016

SEAL

NORTH CAROLINA PROFESSIONAL SEAL 022104 ENGINEER JOHN S. KITE, III

11/8/2016
R:\Div\Proj\Division04\W5500\Traffic\TrafficControl\TCP\W5500_TC_TMP_01.dgn
User:mspringer

PROJ. REFERENCE NO.	SHEET NO.
W-5500	TMP-1A

ROADWAY STANDARD DRAWINGS

THE FOLLOWING ROADWAY STANDARDS AS SHOWN IN "ROADWAY STANDARD DRAWINGS" - PROJECT SERVICES UNIT - N.C. DEPARTMENT OF TRANSPORTATION - RALEIGH, N.C., DATED JANUARY 2012 ARE APPLICABLE TO THIS PROJECT AND BY REFERENCE HEREBY ARE CONSIDERED A PART OF THESE PLANS:

STD. NO.	TITLE
1101.01	WORK ZONE ADVANCE WARNING SIGNS
1101.02	TEMPORARY LANE CLOSURES
1101.03	TEMPORARY ROAD CLOSURES
1101.04	TEMPORARY SHOULDER CLOSURES
1101.05	WORK ZONE VEHICLE ACCESSES
1101.11	TRAFFIC CONTROL DESIGN TABLES
1110.01	STATIONARY WORK ZONE SIGNS
1110.02	PORTABLE WORK ZONE SIGNS
1130.01	DRUM
1135.01	CONES
1145.01	BARRICADES
1150.01	FLAGGING DEVICES
1160.01	TEMPORARY CRASH CUSHION
1170.01	POSITIVE PROTECTION
1180.01	SKINNY-DRUM
1205.01	PAVEMENT MARKINGS - LINE TYPES AND OFFSETS
1205.02	PAVEMENT MARKINGS - TWO-LANE AND MULTI-LANE ROADWAYS
1205.03	PAVEMENT MARKINGS - EXITS AND ENTRANCE RAMPS
1205.04	PAVEMENT MARKINGS - INTERSECTIONS
1205.05	PAVEMENT MARKINGS - TURN LANES
1205.06	PAVEMENT MARKINGS - LANE DROPS
1205.07	PAVEMENT MARKINGS - PEDESTRIAN CROSSWALKS
1205.08	PAVEMENT MARKINGS - SYMBOLS AND WORD MESSAGES
1205.09	PAVEMENT MARKINGS - PAINTED ISLANDS
1205.10	PAVEMENT MARKINGS - SCHOOL AREAS
1205.11	PAVEMENT MARKINGS - RAILROAD CROSSINGS
1205.12	PAVEMENT MARKINGS - BRIDGES
1205.13	PAVEMENT MARKINGS - LANE REDUCTIONS
1250.01	RAISED PAVEMENT MARKERS - INSTALLATION SPACING
1251.01	RAISED PAVEMENT MARKERS - PERMANENT AND TEMPORARY

LEGEND

GENERAL

- DIRECTION OF TRAFFIC FLOW
- DIRECTION OF PEDESTRIAN TRAFFIC FLOW
- EXIST. PVMT.
- NORTH ARROW
- PROPOSED PVMT.
- TEMP. SHORING (LOCATION PURPOSES ONLY)
- WORK AREA
- REMOVAL

SIGNALS

- EXISTING
- PROPOSED
- TEMPORARY

PAVEMENT MARKINGS

- EXISTING LINES
- TEMPORARY LINES

TRAFFIC CONTROL DEVICES

- BARRICADE (TYPE III)
- CONE
- DRUM
- SKINNY DRUM
- TUBULAR MARKER
- TEMPORARY CRASH CUSHION
- FLASHING ARROW BOARD
- FLAGGER
- LAW ENFORCEMENT
- TRUCK MOUNTED ATTENUATOR (TMA)
- CHANGEABLE MESSAGE SIGN

TEMPORARY SIGNING

- PORTABLE SIGN
- STATIONARY SIGN
- STATIONARY OR PORTABLE SIGN

PAVEMENT MARKERS

- CRYSTAL/CRYSTAL
- CRYSTAL/RED
- YELLOW/YELLOW

PAVEMENT MARKING SYMBOLS

PAVEMENT MARKING SYMBOLS

TEMPORARY PAVEMENT MARKING

4"	
PA	WHITE EDGELINE
PI	YELLOW DOUBLE CENTER

DocuSigned by:
Steve Kite
E27CE30E1DFC442...

APPROVED: _____

DATE: 11/8/2016

SEAL

NORTH CAROLINA PROFESSIONAL SEAL 022104 ENGINEER JOHN S KITE JR

DIVISION OF HIGHWAYS · STATE OF NORTH CAROLINA · DEPARTMENT OF TRANSPORTATION · WORK ZONE TRAFFIC CONTROL

DOCUMENT NOT CONSIDERED FINAL UNLESS ALL SIGNATURES COMPLETED

ROADWAY STANDARD DRAWINGS & LEGEND

11/8/2016
R:\DivProj\Division04\W5500\Traffic\TrafficControl\TCP\W5500_TC_TMP_01.dgn
User:mspringer

PROJ. REFERENCE NO.	SHEET NO.
W-5500	TMP-1B

GENERAL NOTES

CHANGES MAY BE REQUIRED WHEN PHYSICAL DIMENSIONS IN THE DETAIL DRAWINGS, STANDARD DETAILS, AND ROADWAY DETAILS ARE NOT ATTAINABLE TO MEET FIELD CONDITIONS OR RESULT IN DUPLICATE OR UNDESIRED OVERLAPPING OF DEVICES. MODIFICATION MAY INCLUDE: MOVING, SUPPLEMENTING, COVERING, OR REMOVAL OF DEVICES AS DIRECTED BY THE ENGINEER.

THE FOLLOWING GENERAL NOTES APPLY AT ALL TIMES FOR THE DURATION OF THE CONSTRUCTION PROJECT EXCEPT WHEN OTHERWISE NOTED IN THE PLAN OR DIRECTED BY THE ENGINEER.

LANE AND SHOULDER CLOSURE REQUIREMENTS

A) REMOVE LANE CLOSURE DEVICES FROM THE LANE WHEN WORK IS NOT BEING PERFORMED BEHIND THE LANE CLOSURE OR WHEN A LANE CLOSURE IS NO LONGER NEEDED OR AS DIRECTED BY THE ENGINEER.

B) WHEN PERSONNEL AND/OR EQUIPMENT ARE WORKING WITHIN 15 FT OF AN OPEN TRAVEL LANE, CLOSE THE NEAREST OPEN SHOULDER USING ROADWAY STANDARD DRAWING NO. 1101.04 UNLESS THE WORK AREA IS PROTECTED BY BARRIER OR GUARDRAIL OR A LANE CLOSURE IS INSTALLED.

C) WHEN PERSONNEL AND/OR EQUIPMENT ARE WORKING ON THE SHOULDER ADJACENT TO AN UNDIVIDED FACILITY AND WITHIN 5 FT OF AN OPEN TRAVEL LANE, CLOSE THE NEAREST OPEN TRAVEL LANE USING ROADWAY STANDARD DRAWING NO. 1101.02 UNLESS THE WORK AREA IS PROTECTED BY BARRIER OR GUARDRAIL.

D) WHEN PERSONNEL AND/OR EQUIPMENT ARE WORKING WITHIN A LANE OF TRAVEL OF AN UNDIVIDED OR DIVIDED FACILITY, CLOSE THE LANE ACCORDING TO THE TRAFFIC CONTROL PLANS, ROADWAY STANDARD DRAWINGS, OR AS DIRECTED BY THE ENGINEER. CONDUCT THE WORK SO THAT ALL PERSONNEL AND/OR EQUIPMENT REMAIN WITHIN THE CLOSED TRAVEL LANE.

E) DO NOT WORK SIMULTANEOUSLY WITHIN 15 FT ON BOTH SIDES OF AN OPEN TRAVELWAY, RAMP, OR LOOP WITHIN THE SAME LOCATION UNLESS PROTECTED WITH GUARDRAIL OR BARRIER.

F) DO NOT INSTALL MORE THAN ONE LANE CLOSURE IN ANY ONE DIRECTION ON WAYNE MEMORIAL DRIVE.

PAVEMENT EDGE DROP OFF REQUIREMENTS

G) BACKFILL AT A 6:1 SLOPE UP TO THE EDGE AND ELEVATION OF EXISTING PAVEMENT IN AREAS ADJACENT TO AN OPENED TRAVEL LANE THAT HAS AN EDGE OF PAVEMENT DROP-OFF AS FOLLOWS:

BACKFILL DROP-OFFS THAT EXCEED 2 INCHES ON ROADWAYS WITH POSTED SPEED LIMITS OF 45 MPH OR GREATER.

BACKFILL DROP-OFFS THAT EXCEED 3 INCHES ON ROADWAYS WITH POSTED SPEED LIMITS LESS THAN 45 MPH.

BACKFILL WITH SUITABLE COMPACTED MATERIAL, AS APPROVED BY THE ENGINEER, AT NO EXPENSE TO THE DEPARTMENT.

H) DO NOT EXCEED A DIFFERENCE OF 2 INCHES IN ELEVATION BETWEEN OPEN LANES OF TRAFFIC FOR NOMINAL LIFTS OF 1.5 INCHES. INSTALL ADVANCE WARNING "UNEVEN LANES" SIGNS (W8-11) IN ADVANCE AND A MINIMUM OF EVERY HALF MILE THROUGHOUT THE UNEVEN AREA.

TRAFFIC PATTERN ALTERATIONS

I) NOTIFY THE ENGINEER TWENTY ONE (21) CALENDAR DAYS PRIOR TO ANY TRAFFIC PATTERN ALTERATION.

SIGNING

J) INSTALL ADVANCE WORK ZONE WARNING SIGNS WHEN WORK IS WITHIN 40 FT FROM THE EDGE OF TRAVEL LANE AND NO MORE THAN THREE (3) DAYS PRIOR TO THE BEGINNING OF CONSTRUCTION.

K) THE CONTRACTOR SHALL INSTALL SIGNING AND DEVICES REQUIRED TO CLOSE THE ROAD ACCORDING TO THE ROADWAY STANDARD DRAWINGS AND TRAFFIC CONTROL PLANS.

THE CONTRACTOR SHALL INSTALL SIGNING REQUIRED FOR THE OFF-SITE DETOUR ROUTE AS SHOWN IN THE TRAFFIC CONTROL PLANS.

L) COVER OR REMOVE ALL SIGNS AND DEVICES REQUIRED TO CLOSE THE ROAD WHEN ROAD CLOSURE IS NOT IN OPERATION.

COVER OR REMOVE ALL SIGNS REQUIRED FOR THE OFF-SITE DETOUR WHEN THE DETOUR IS NOT IN OPERATION.

M) ENSURE ALL NECESSARY SIGNING IS IN PLACE PRIOR TO ALTERING ANY TRAFFIC PATTERN.

N) INSTALL BLACK ON ORANGE "DIP" SIGNS (W8-2) AND/OR "BUMP" SIGNS (W8-1) IN ADVANCE OF THE UNEVEN AREA, OR AS DIRECTED BY THE ENGINEER.

TRAFFIC CONTROL DEVICES

N) WHEN LANE CLOSURES ARE NOT IN EFFECT SPACE CHANNELIZING DEVICES IN WORK AREAS NO GREATER IN FEET THAN TWICE THE POSTED SPEED LIMIT (MPH) EXCEPT, 10 FT ON-CENTER IN RADII, AND 3 FT OFF THE EDGE OF AN OPEN TRAVELWAY. REFER TO STANDARD SPECIFICATIONS FOR ROADS AND STRUCTURES SECTION 1130 (DRUMS), 1135 (CONES) AND 1180 (SKINNY DRUMS) FOR ADDITIONAL REQUIREMENTS.

O) PLACE TYPE III BARRICADES, WITH "ROAD CLOSED" SIGN R11-2 ATTACHED, OF SUFFICIENT LENGTH TO CLOSE ENTIRE ROADWAY.

PAVEMENT MARKINGS AND MARKERS

P) INSTALL TEMPORARY PAVEMENT MARKINGS AND TEMPORARY PAVEMENT MARKERS ON INTERIM LAYERS OF PAVEMENT AS FOLLOWS:

ROAD NAME	MARKING	MARKER
ALL ROUTES	PAINT	TEMP. RAISED

Q) PLACE ONE APPLICATION OF PAINT FOR TEMPORARY TRAFFIC PATTERNS. PLACE A SECOND APPLICATION OF PAINT SIX (6) MONTHS AFTER THE INITIAL APPLICATION AND EVERY SIX MONTHS AS DIRECTED BY THE ENGINEER.

R) TIE PROPOSED PAVEMENT MARKING LINES TO EXISTING PAVEMENT MARKING LINES.

S) REMOVE/REPLACE ANY CONFLICTING/DAMAGED PAVEMENT MARKINGS AND MARKERS BY THE END OF EACH DAY'S OPERATION.

PHASING

PHASING NOTE:

1) THE CONTRACTOR SHALL MAINTAIN ACCESS TO EXISTING DRIVEWAYS AS DIRECTED BY THE ENGINEER.

STEP 1: INSTALL DETOUR SIGNING AS SHOWN ON TMP-2 AND IN ACCORDANCE WITH RSD 1101.03 (SHEET 1 OF 9).

STEP 2: USING THE OFF-SITE DETOUR AND RSD 1101.02 (SHEET 1 OF 15), CLOSE -L- (SR 1556) TO THRU TRAFFIC AND PERFORM THE FOLLOWING:

-CONSTRUCT CULVERT AT -L- STA. 34+63.25.
-CONSTRUCT AS MUCH OF -L- AS POSSIBLE WITH -L- CLOSED.

STEP 3: REOPEN -L- AND USING FLAGGERS AND RSD 1101.02 (SHEET 1 OF 15), PAVE FINAL LAYER OF -L- AND PLACE PAVEMENT MARKINGS IN FINAL PATTERN.

STEP 4: REMOVE ALL TRAFFIC CONTROL DEVICES.

DocuSigned by:
APPROVED: Steve Kite
DATE: 11/21/2016 E7CE305...
SEAL

NORTH CAROLINA PROFESSIONAL SEAL 022104 ENGINEER JOHN S. KITE, JR.

DOCUMENT NOT CONSIDERED FINAL UNLESS ALL SIGNATURES COMPLETED

DIVISION OF HIGHWAYS STATE OF NORTH CAROLINA DEPARTMENT OF TRANSPORTATION WORK ZONE TRAFFIC CONTROL

GENERAL NOTES & PHASING

11/16/2016
R:\Div\Proj\Division04\W5500\Traffic\TrafficControl\TCP\W5500_TC_TMP_01.dgn
User:mspringer

PROJ. REFERENCE NO.	SHEET NO.
W-5500	TMP-2

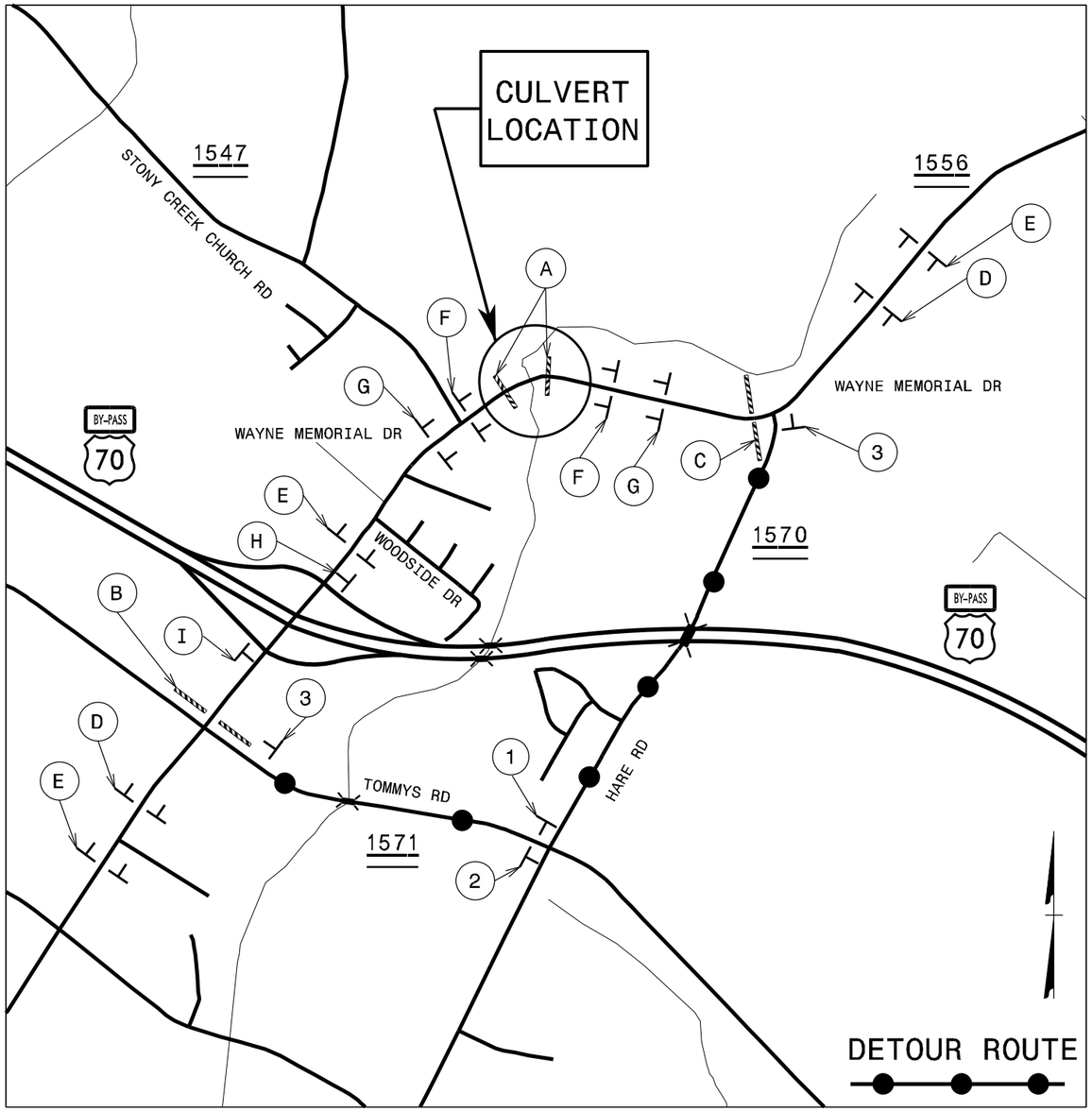

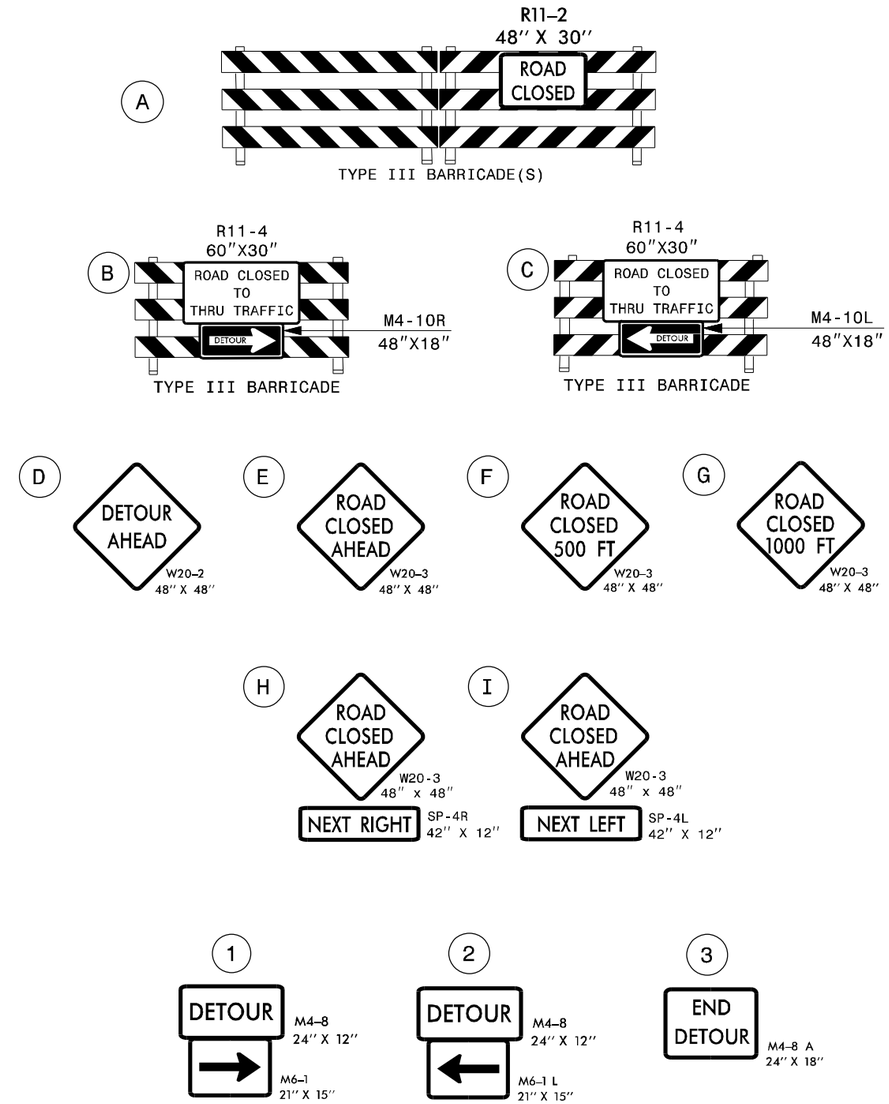

LEGEND

TRAFFIC CONTROL DEVICES

BARRICADE (TYPE III)

TEMPORARY SIGNING

STATIONARY SIGN

NOTES:
TRAFFIC CONTROL DEVICES (A) THROUGH (I) SHALL BE INSTALLED ACCORDING TO RSD 1101.03, SHEET 1 OF 9.

TRAFFIC CONTROL DEVICES (1) THROUGH (3) SHALL BE INSTALLED AS SHOWN ON PLAN OR AS DIRECTED BY THE ENGINEER.

DocuSigned by:
Steve Kite
2C8CE30E1DFC442...

APPROVED: 11/8/2016

DATE:

SEAL

NORTH CAROLINA PROFESSIONAL SEAL 022104 ENGINEER JOHN S. KITE, JR.

DOCUMENT NOT CONSIDERED FINAL UNLESS ALL SIGNATURES COMPLETED

DIVISION OF HIGHWAYS STATE OF NORTH CAROLINA DEPARTMENT OF TRANSPORTATION WORK ZONE TRAFFIC CONTROL

OFF-SITE DETOUR ROUTE AND BARRICADE PLACEMENT

11/8/2016
R:\DivProj\Division04\W5500\Traffic\TrafficControl\TCP\W5500_TC_TMP_02.dgn
User:msspringer

TIP NO.	SHEET NO.
W-5500	PMP-1

APPROVED: DocuSigned by: Ayman Alqudwah F32AC5CAF965472...

DATE: 1/5/2017

SEAL

NORTH CAROLINA PROFESSIONAL SEAL 028387 ENGINEER AYMAN I. ALQUDWAH

DOCUMENT NOT CONSIDERED FINAL UNLESS ALL SIGNATURES COMPLETED

STATE OF NORTH CAROLINA
DEPARTMENT OF TRANSPORTATION

PAVEMENT MARKING PLAN

WAYNE COUNTY

LOCATION: SR–1556 (WAYNE MEMORIAL DRIVE) FROM SR–1622 (WOODSIDE DRIVE) TO 0.1 MILES SOUTHWEST OF SR–1572 (SAULSTON ROAD).

T.I.P.: W–5500

W–5500 FINAL PAVEMENT MARKING SCHEDULE

SYMBOL	DESCRIPTION
	(FINAL PAVEMENT MARKINGS)
	THERMOPLASTIC (24″, 120 MILS)
T2	WHITE STOPBAR
	THERMOPLASTIC (4″, 120 MILS)
T8	2 FT.-6 FT./SP WHITE MINISKIP
TI	YELLOW DOUBLE CENTER
	THERMOPLASTIC (4″, 90 MILS)
TA	WHITE EDGELINE
TB	YELLOW EDGELINE
	THERMOPLASTIC (8″, 90 MILS)
TP	THERMOPLASTIC YELLOW DIAGONAL
	THERMOPLASTIC PAVEMENT MARKING SYMBOLS (90 MILS)
UD	COMBO LEFT/STRAIGHT ARROW
UE	COMBO RIGHT/STRAIGHT ARROW
UF	COMBO LEFT/RIGHT ARROW
	(MARKERS)
	PERMANENT RAISED PAVEMENT MARKERS
	NONE

ROADWAY STANDARD DRAWING

THE FOLLOWING ROADWAY STANDARDS AS APPEAR IN "ROADWAY STANDARD DRAWINGS" - PROJECT SERVICES UNIT - N.C. DEPARTMENT OF TRANSPORTATION - RALEIGH, N.C., DATED JANUARY 2012 ARE APPLICABLE TO THIS PROJECT AND BY REFERENCE HEREBY ARE CONSIDERED A PART OF THESE PLANS:

STD. NO.	TITLE
1205.01	PAVEMENT MARKINGS - LINE TYPES AND OFFSETS
1205.02	PAVEMENT MARKINGS - 2 LANE AND MULTILANE ROADWAYS
1205.04	PAVEMENT MARKINGS - INTERSECTIONS
1205.09	PAVEMENT MARKINGS - PAINTED ISLANDS
1261.01	GUARDRAIL AND BARRIER DELINEATOR SPACING
1261.02	GUARDRAIL AND BARRIER DELINEATOR TYPES
1262.01	GUARDRAIL END DELINEATION

GENERAL NOTES

THE FOLLOWING GENERAL NOTES APPLY AT ALL TIMES FOR THE DURATION OF THE CONSTRUCTION PROJECT, EXCEPT WHEN OTHERWISE NOTED IN THE PLAN, OR DIRECTED BY THE ENGINEER.

A) INSTALL PAVEMENT MARKINGS AND PAVEMENT MARKERS ON THE FINAL SURFACE AS FOLLOWS:

ROAD NAME	MARKING	MARKER
ALL	THERMOPLASTIC	NONE

B) TIE PROPOSED PAVEMENT MARKING LINES TO EXISTING PAVEMENT MARKING LINES.

C) REMOVE/REPLACE ANY CONFLICTING/DAMAGED PAVEMENT MARKINGS AND MARKERS.

D) PASSING ZONES WILL BE DETERMINED IN THE FIELD AND MUST BE APPROVED BY THE ENGINEER.

E) STOP BAR LOCATION AT NON-SIGNALIZED INTERSECTIONS MAY BE ADJUSTED AS DIRECTED BY THE ENGINEER.

F) UNLESS OTHERWISE SPECIFIED, HEATED-IN-PLACE THERMOPLASTIC MAY BE USED IN LIEU OF EXTRUDED THERMOPLASTIC FOR STOP BARS, SYMBOLS, CHARACTERS AND DIAGONALS. IF HEATED-IN-PLACE IS USED, IT SHALL BE PAID FOR USING THE EXTRUDED THERMOPLASTIC PAY ITEM.

G) SEE ROADWAY PLANS FOR ALTERNATE CURB RAMP DESIGNS WHEN INDICATED ON PAVEMENT MARKING DETAIL SHEETS.

INDEX

SHEET NO.	DESCRIPTION
PMP-1	PAVEMENT MARKING PLAN TITLE AND SCHEDULE SHEET
PMP-2 thru 5	PAVEMENT MARKING DETAIL

PLAN PREPARED BY: N.C.D.O.T. SIGNING AND DELINEATION UNIT

AYMAN ALQUDWAH, PE, CPM SIGNING & DELINEATION REGIONAL ENGINEER

D. M. EATON, PE SIGNING & DELINEATION PROJECT DESIGN ENGINEER

STATE OF NORTH CAROLINA DEPARTMENT OF TRANSPORTATION

04-JAN-2017 09:51
S:\S&DU\Regions\Signing\Basir\TIP Projects\W-5500\Signing\PM Plan\W-5500_PMP_PM-1.dgn
meaton AT TE274922

TIP NO.	SHEET NO.
W-5500	PMP-2

APPROVED: DocuSigned by: Ayman Alqudwah F32AC5CAF965472...

DATE: 1/5/2017

SEAL

NORTH CAROLINA PROFESSIONAL SEAL 028387 ENGINEER AYMAN I. ALQUDWAH

DOCUMENT NOT CONSIDERED FINAL UNLESS ALL SIGNATURES COMPLETED

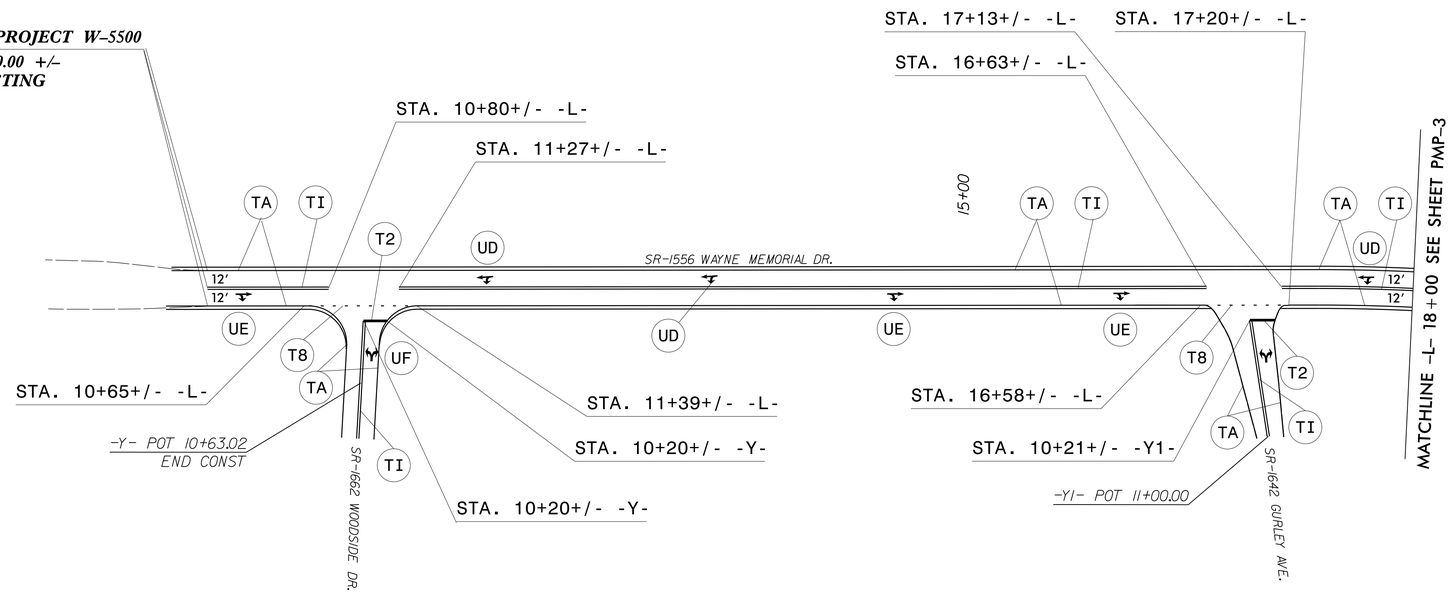

PAVEMENT MARKING DETAIL

TIP NO.	SHEET NO.
W-5500	PMP-3

APPROVED: DocuSigned by: Ayman Alqudwah F32AC5CAF965472...

DATE: 1/5/2017

SEAL

NORTH CAROLINA PROFESSIONAL SEAL 028387 ENGINEER AYMAN I. ALQUDWAH

DOCUMENT NOT CONSIDERED FINAL UNLESS ALL SIGNATURES COMPLETED

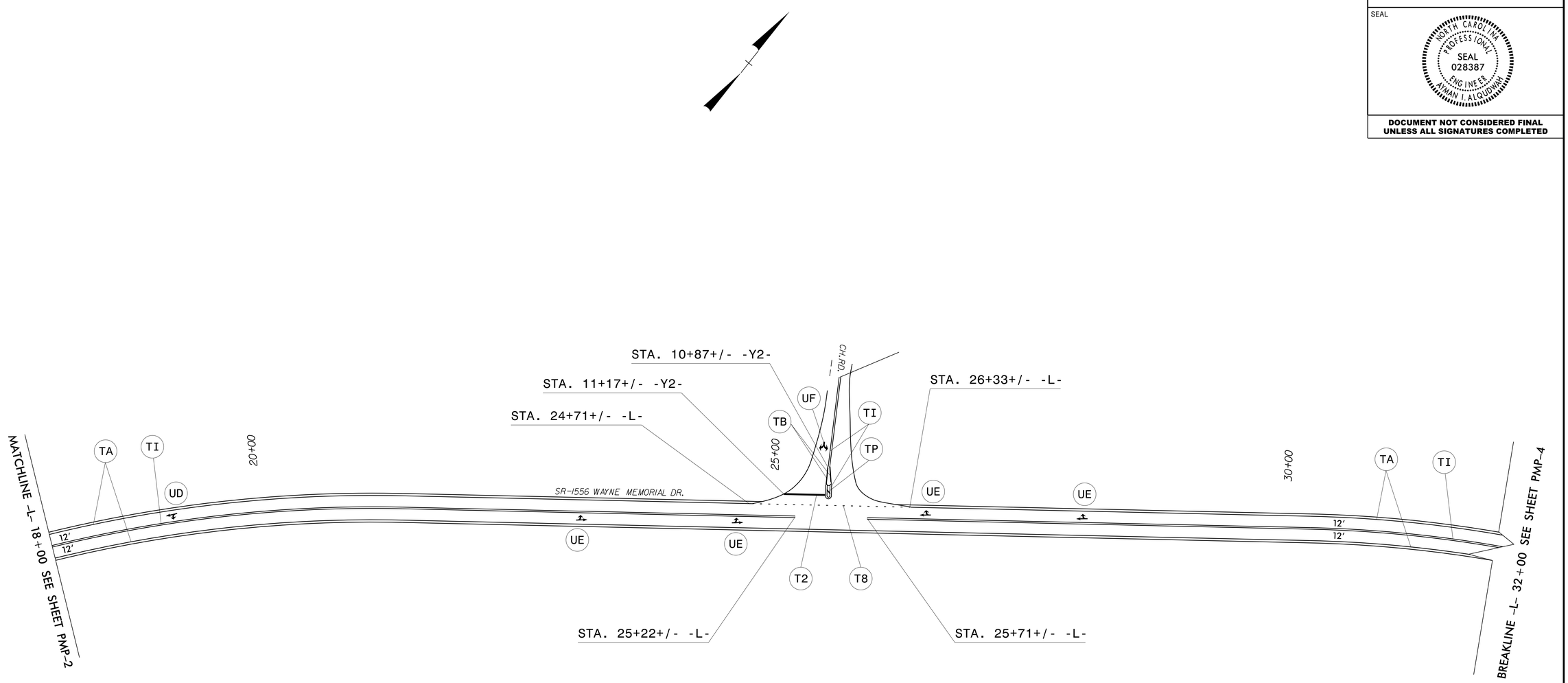

PAVEMENT MARKING DETAIL

TIP NO.	SHEET NO.
W-5500	PMP-4

APPROVED: DocuSigned by: Ayman Alqudwah F32AC5CAF965472...

DATE: 1/5/2017

SEAL

NORTH CAROLINA PROFESSIONAL SEAL 028387 ENGINEER AYMAN I. ALQUDWAH

DOCUMENT NOT CONSIDERED FINAL UNLESS ALL SIGNATURES COMPLETED

PAVEMENT MARKING DETAIL

TIP NO.	SHEET NO.
W-5500	PMP-5

APPROVED: DocuSigned by: Ayman Alqudwah F32AC5CAF965472...

DATE: 1/5/2017

SEAL

NORTH CAROLINA PROFESSIONAL SEAL 028387 ENGINEER AYMAN I. ALQUDWAH

DOCUMENT NOT CONSIDERED FINAL UNLESS ALL SIGNATURES COMPLETED

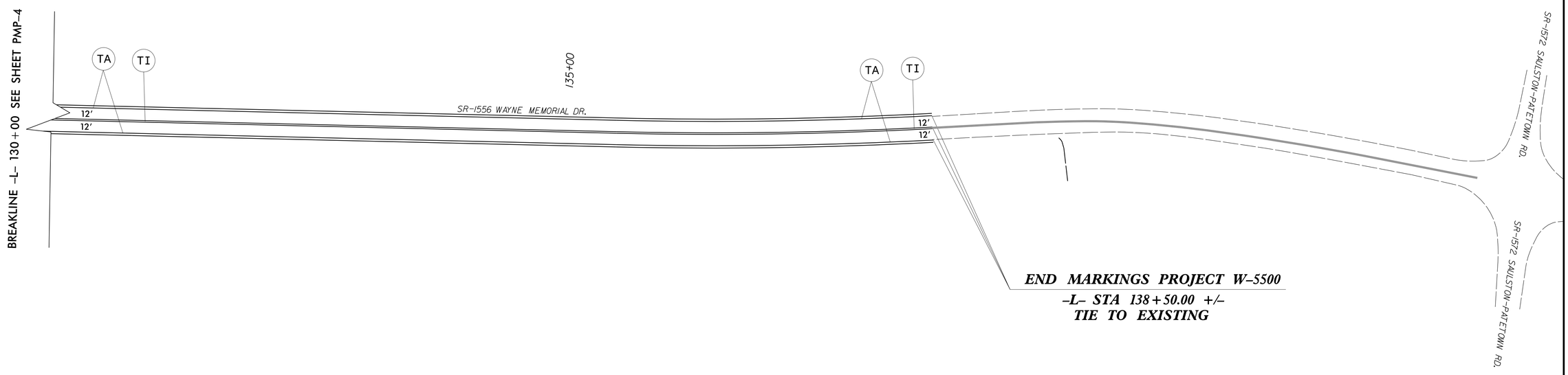

PAVEMENT MARKING DETAIL

TIP PROJECT: W-5500

STATE	STATE PROJECT REFERENCE NO.	SHEET NO.	TOTAL SHEETS
N.C.	W-5500	EC-1	

STATE PROJ. NO.	F. A. PROJ. NO.	DESCRIPTION

STATE OF NORTH CAROLINA

DIVISION OF HIGHWAYS

PLAN FOR PROPOSED

HIGHWAY EROSION CONTROL

WAYNE COUNTY

LOCATION: SR–1556 (WAYNE MEMORIAL DRIVE) FROM SR–1622 (WOODSIDE DRIVE) TO 0.1 MILES SOUTHWEST OF SR–1572 SAULSTON ROAD.

TYPE OF WORK: GRADING, DRAINAGE, PAVING AND CULVERT.

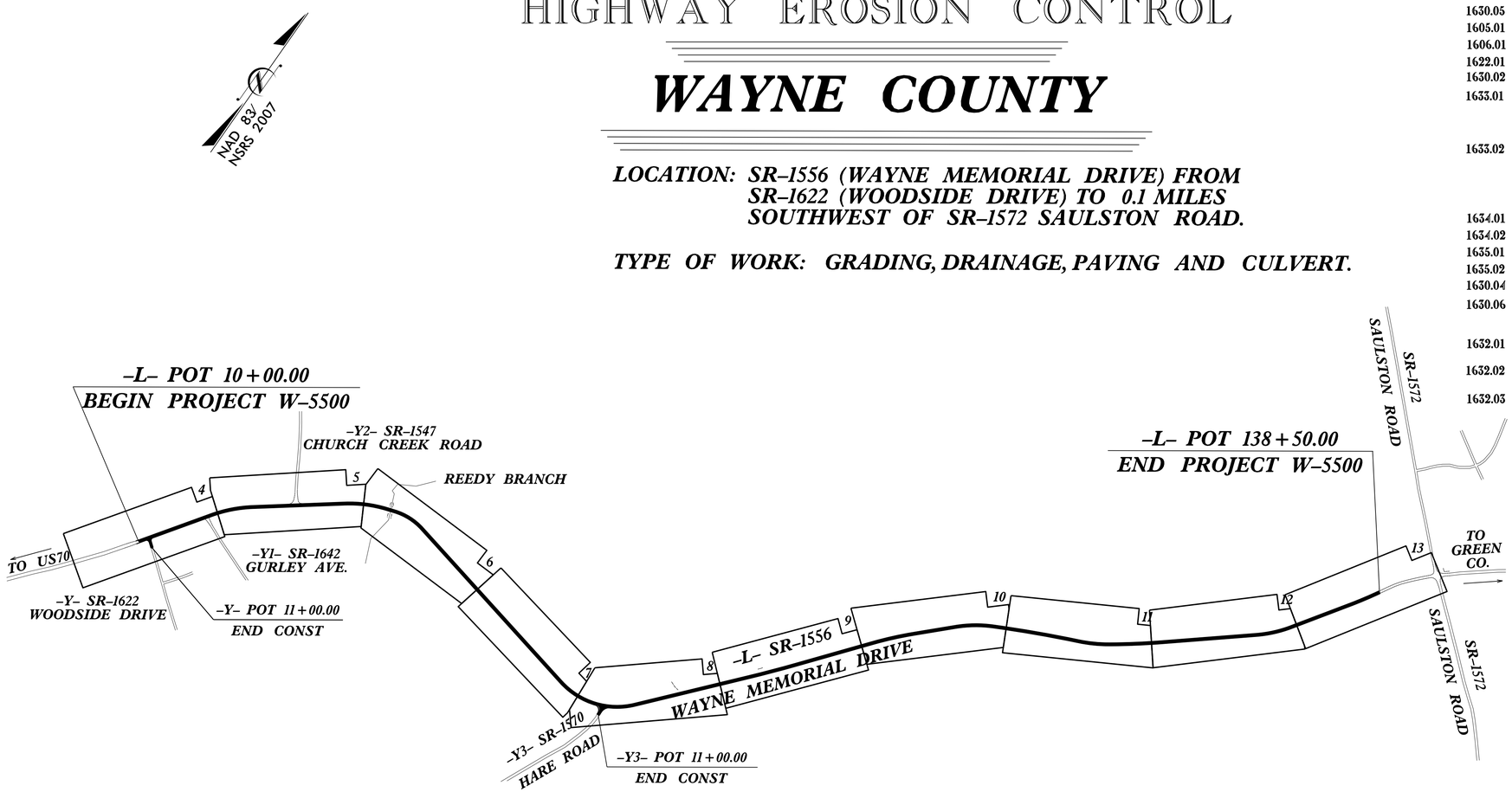

EROSION AND SEDIMENT CONTROL MEASURES

Std. #	Description	Symbol
1630.03	Temporary Silt Ditch	TSD
1630.05	Temporary Diversion	TD
1605.01	Temporary Silt Fence	
1606.01	Special Sediment Control Fence	
1622.01	Temporary Berms and Slope Drains	
1630.02	Silt Basin Type B	
1633.01	Temporary Rock Silt Check Type-A	
	Temporary Rock Silt Check Type-A with Matting and Polyacrylamide (PAM)	
1633.02	Temporary Rock Silt Check Type-B	
	Wattle / Coir Fiber Wattle	SW CFW
	Wattle / Coir Fiber Wattle with Polyacrylamide (PAM)	
1634.01	Temporary Rock Sediment Dam Type-A	
1634.02	Temporary Rock Sediment Dam Type-B	
1635.01	Rock Pipe Inlet Sediment Trap Type-A	
1635.02	Rock Pipe Inlet Sediment Trap Type-B	
1630.04	Stilling Basin	
1630.06	Special Stilling Basin	
	Rock Inlet Sediment Trap:	
1632.01	Type A	A
1632.02	Type B	B
1632.03	Type C	C
	Skimmer Basin	
	Tiered Skimmer Basin	
	Infiltration Basin	

THIS PROJECT CONTAINS EROSION CONTROL PLANS FOR CLEARING AND GRUBBING PHASE OF CONSTRUCTION.

ENVIRONMENTALLY SENSITIVE AREA(S) EXIST ON THIS PROJECT

Refer To E. C. Special Provisions for Special Considerations.

THIS PROJECT HAS BEEN DESIGNED TO SENSITIVE WATERSHED STANDARDS.

GRAPHIC SCALE

0

PLANS

0

PROFILE (HORIZONTAL)

0

PROFILE (VERTICAL)

ROADSIDE ENVIRONMENTAL UNIT
DIVISION OF HIGHWAYS
STATE OF NORTH CAROLINA

THESE EROSION AND SEDIMENT CONTROL PLANS COMPLY WITH THE REGULATIONS SET FORTH BY THE NCG–010000 GENERAL CONSTRUCTION PERMIT EFFECTIVE AUGUST 3, 2011 ISSUED BY THE NORTH CAROLINA DEPARTMENT OF ENVIRONMENT AND NATURAL RESOURCES DIVISION OF WATER QUALITY.

Prepared in the Office of:

ROADSIDE ENVIRONMENTAL UNIT

1 South Wilmington St.
Raleigh, NC 27611

2012 STANDARD SPECIFICATIONS

Designed by:

Noelle Ring — ***3456***

NAME — *LEVEL III CERTIFICATION NO.*

Roadway Standard Drawings

The following roadway english standards as appear in "Roadway Standard Drawings"– Roadway Design Unit – N. C. Department of Transportation – Raleigh, N. C., dated January 2012 and the latest revison thereto are applicable to this project and by reference hereby are considered a part of these plans.

1604.01	Railroad Erosion Control Detail	1632.01	Rock Inlet Sediment Trap Type A
1605.01	Temporary Silt Fence	1632.02	Rock Inlet Sediment Trap Type B
1606.01	Special Sediment Control Fence	1632.03	Rock Inlet Sediment Trap Type C
1607.01	Gravel Construction Entrance	1633.01	Temporary Rock Silt Check Type A
1622.01	Temporary Berms and Slope Drains	1633.02	Temporary Rock Silt Check Type B
1630.01	Riser Basin	1634.01	Temporary Rock Sediment Dam Type A
1630.02	Silt Basin Type B	1634.02	Temporary Rock Sediment Dam Type B
1630.03	Temporary Silt Ditch	1635.01	Rock Pipe Inlet Sediment Trap Type A
1630.04	Stilling Basin	1635.02	Rock Pipe Inlet Sediment Trap Type B
1630.05	Temporary Diversion	1640.01	Coir Fiber Baffle
1630.06	Special Stilling Basin	1645.01	Temporary Stream Crossing
1631.01	Matting Installation		

26-JAN-2017 08:52
rrong01 ...\Projects\W5500\Environmental\Design\W5500_EC_tsh.dgn

PROJECT REFERENCE NO.	SHEET NO.
W-5500	EC-2
R/W SHEET NO.	
ROADWAY DESIGN ENGINEER	HYDRAULICS ENGINEER

WATTLE WITH POLYACRYLAMIDE (PAM) DETAIL

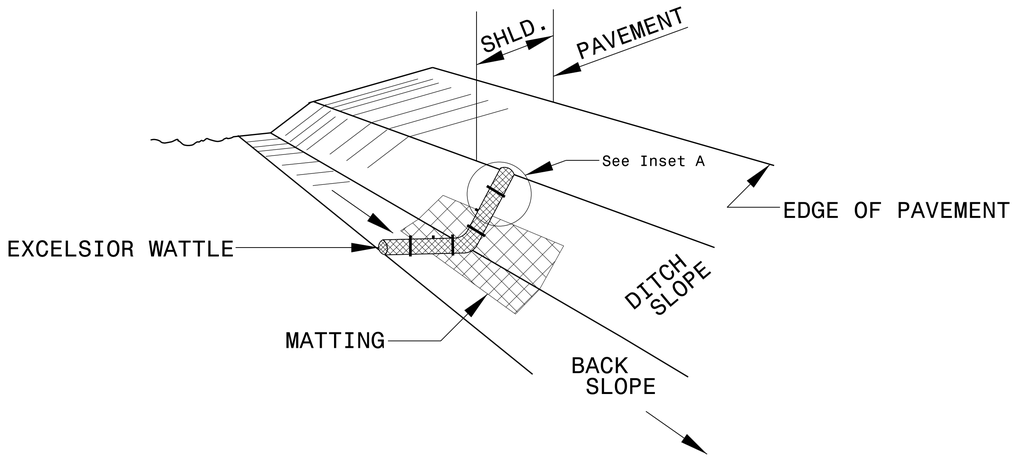

ISOMETRIC VIEW

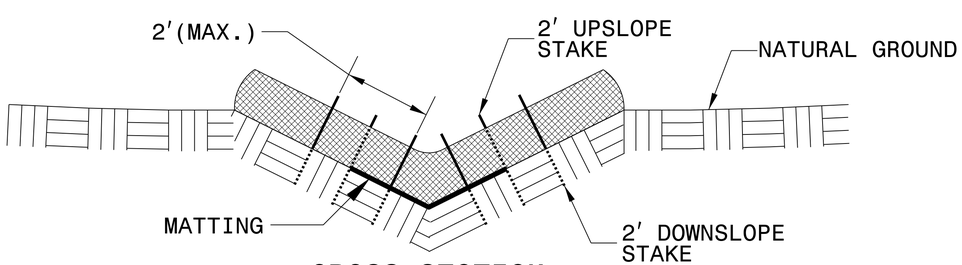

CROSS SECTION VEE DITCH

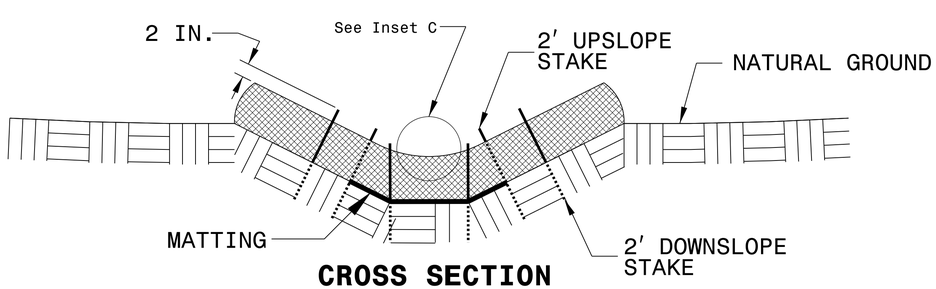

CROSS SECTION TRAPEZOIDAL DITCH

NOTES:

USE MINIMUM 12 IN. DIAMETER EXCELSIOR WATTLE.

USE 2 FT. WOODEN STAKES WITH A 2 IN. BY 2 IN. NOMINAL CROSS SECTION.

ONLY INSTALL WATTLE(S) TO A HEIGHT IN DITCH SO FLOW WILL NOT WASH AROUND WATTLE AND SCOUR DITCH SLOPES AND AS DIRECTED.

INSTALL A MINIMUM OF 2 UPSLOPE STAKES AND 4 DOWNSLOPE STAKES AT AN ANGLE TO WEDGE WATTLE TO BOTTOM OF DITCH.

PROVIDE STAPLES MADE OF 0.125 IN. DIAMETER STEEL WIRE FORMED INTO A U SHAPE NOT LESS THAN 12″ IN LENGTH.

INSTALL STAPLES APPROXIMATELY EVERY 1 LINEAR FOOT ON BOTH SIDES OF WATTLE AND AT EACH END TO SECURE IT TO THE SOIL.

INSTALL MATTING IN ACCORDANCE WITH SECTION 1631 OF THE STANDARD SPECIFICATIONS.

PRIOR TO POLYACRYLAMIDE (PAM) APPLICATION, OBTAIN A SOIL SAMPLE FROM PROJECT LOCATION, AND FROM OFFSITE MATERIAL, AND ANALYZE FOR APPROPRIATE PAM FLOCCULANT TO BE APPLIED TO EACH WATTLE.

INITIALLY APPLY 2 OUNCES OF ANIONIC OR NEUTRALLY CHARGED PAM OVER WATTLE WHERE WATER WILL FLOW AND 1 OUNCE OF PAM ON MATTING ON EACH SIDE OF WATTLE. REAPPLY PAM AFTER EVERY RAINFALL EVENT THAT IS EQUAL TO OR EXCEEDS 0.50 IN.

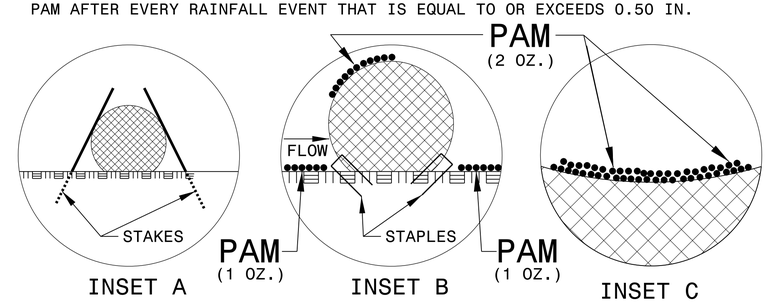

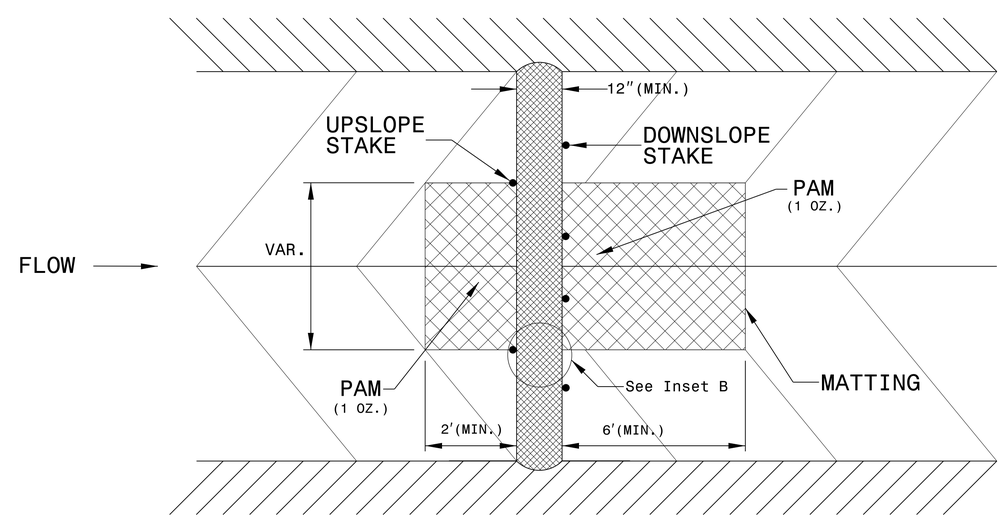

TOP VIEW

PROJECT REFERENCE NO.	SHEET NO.
W-5500	EC-2A
R/W SHEET NO.	
ROADWAY DESIGN ENGINEER	HYDRAULICS ENGINEER

TEMPORARY ROCK SILT CHECK TYPE 'A' WITH EXCELSIOR MATTING AND POLYACRYLAMIDE (PAM)

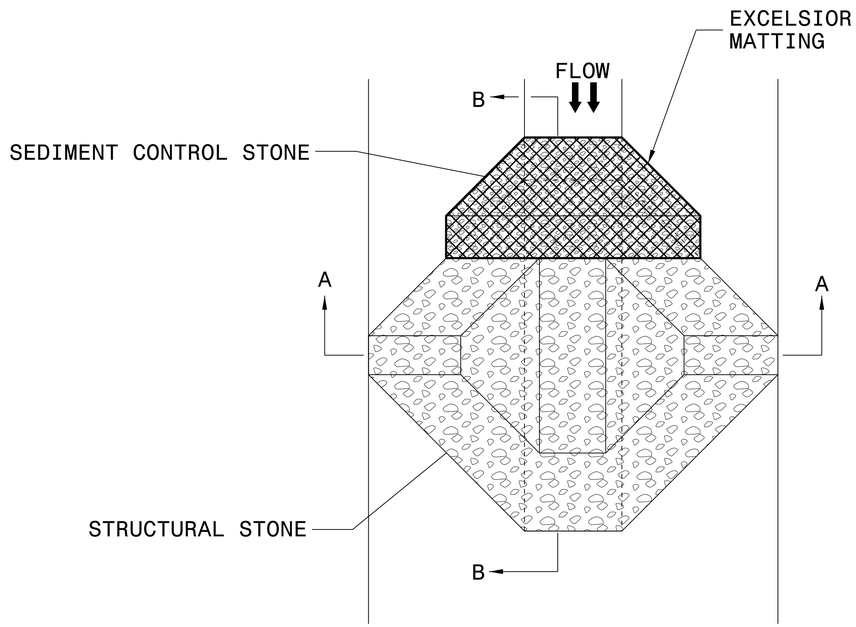

PLAN

NOTES:

INSTALL TEMPORARY ROCK SILT CHECK TYPE A IN ACCORDANCE WITH ROADWAY STANDARD DRAWING NO. 1633.01.

USE EXCELSIOR FOR MATTING MATERIAL AND ANCHOR MATTING SECTION AT TOP AND BOTTOM WITH CLASS B STONE.

PRIOR TO POLYACRYLAMIDE (PAM) APPLICATION, OBTAIN A SOIL SAMPLE FROM PROJECT LOCATION, AND FROM OFFSITE MATERIAL, AND ANALYZE FOR APPROPRIATE PAM FLOCCULANT TO BE APPLIED TO EACH ROCK SILT CHECK.

INITIALLY APPLY 4 OUNCES OF POLYACRYLAMIDE (PAM) TO TOP OF MATTING SECTION AND AFTER EVERY RAINFALL EVENT THAT EQUALS OR EXCEEDS 0.50 INCHES.

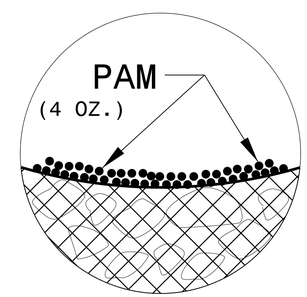

INSET A

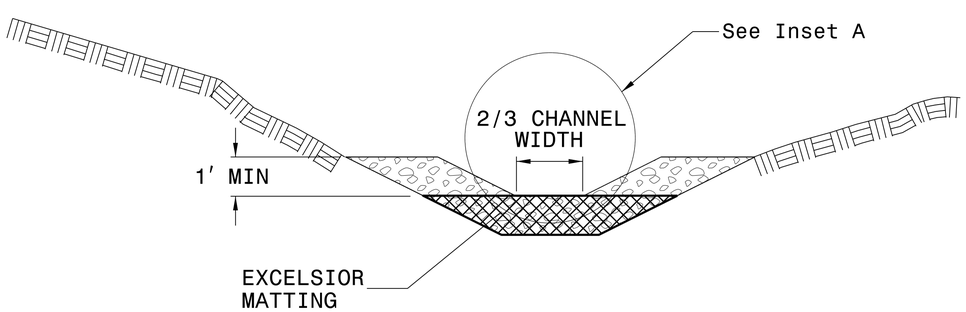

SECTION A-A

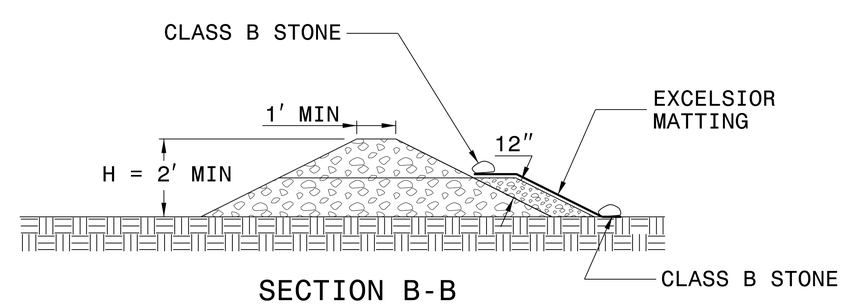

SECTION B-B

NOT TO SCALE

PROJECT REFERENCE NO.	SHEET NO.
W-5500	EC-3
ROADWAY DESIGN ENGINEER	HYDRAULICS ENGINEER

DIVISION OF HIGHWAYS
STATE OF NORTH CAROLINA

SOIL STABILIZATION TIMEFRAMES

SITE DESCRIPTION	STABILIZATION TIME	TIMEFRAME EXCEPTIONS
PERIMETER DIKES, SWALES, DITCHES AND SLOPES	7 DAYS	NONE
HIGH QUALITY WATER (HQW) ZONES	7 DAYS	NONE
SLOPES STEEPER THAN 3:1	7 DAYS	IF SLOPES ARE 10' OR LESS IN LENGTH AND ARE NOT STEEPER THAN 2:1, 14 DAYS ARE ALLOWED.
SLOPES 3:1 OR FLATTER	14 DAYS	7 DAYS FOR SLOPES GREATER THAN 50' IN LENGTH.
ALL OTHER AREAS WITH SLOPES FLATTER THAN 4:1	14 DAYS	NONE, EXCEPT FOR PERIMETERS AND HQW ZONES.

PROJECT REFERENCE NO.	SHEET NO.
W-5500	EC-3A
ROADWAY DESIGN ENGINEER	HYDRAULICS ENGINEER

DIVISION OF HIGHWAYS
STATE OF NORTH CAROLINA

SOIL STABILIZATION SUMMARY SHEET

MATTING FOR EROSION CONTROL

CONST SHEET NO.	LINE	FROM STATION	TO STATION	SIDE	ESTIMATE (SY)
5-6	-L-	26+00	34+00	LT	1135
6-7	-L-	38+00	39+50	RT	190
8	-L-	68+00	70+00	LT	360
8	-L-	68+00	70+00	RT	395
9	-L-	86+00	86+50	LT	50
9	-L-	86+00	86+50	RT	50
12	-L-	127+50	219+50	RT	210
				SUBTOTAL	2390
MISCELLANEOUS MATTING TO BE INSTALLED AS DIRECTED BY THE ENGINEER					6085
				TOTAL	8475
				SAY	8600

PERMANENT SOIL REINFORCEMENT MAT

CONST SHEET NO.	LINE	FROM STATION	TO STATION	SIDE	ESTIMATE (SY)
13	-L-	138+00	138+50	LT	70
				SUBTOTAL	70
		ADDITIONAL PSRM TO BE INSTALLED			0
				TOTAL	70
				SAY	75

PROJECT REFERENCE NO.	SHEET NO.
W-5500	EC-4/CONST.4
R/W SHEET NO.	04
ROADWAY DESIGN ENGINEER	HYDRAULICS ENGINEER

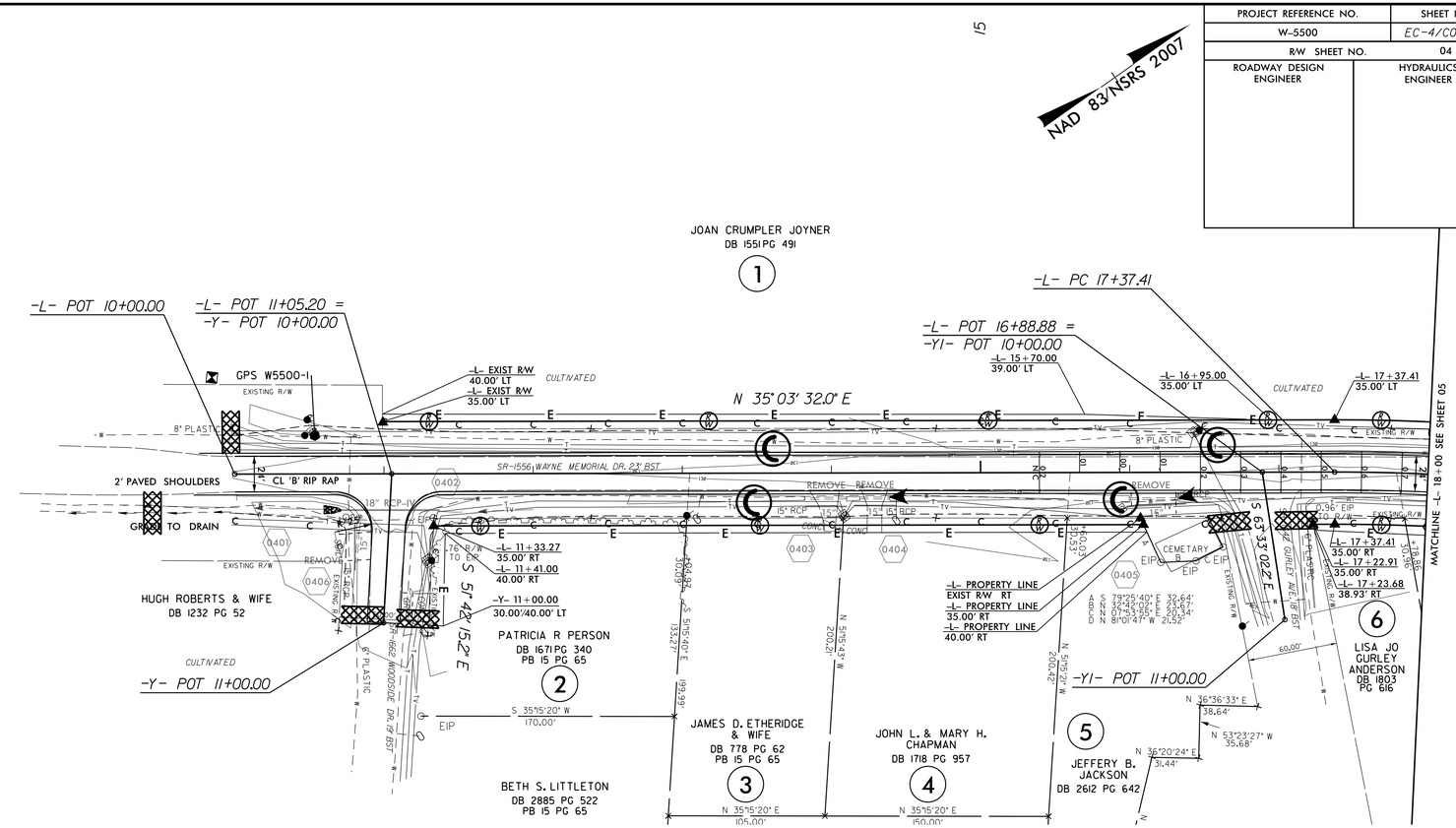

NOTE:
PLACE TEMPORARY ROCK SEDIMENT DAMS TYPE – B AND TEMPORARY ROCK SILT CHECKS TYPE – A AT DRAINAGE OUTLETS.

CLEARING AND GRUBBING
EROSION CONTROL FOR
CONSTRUCTION SHEET 4

PROJECT REFERENCE NO.	SHEET NO.
W-5500	EC-5/CONST.5
R/W SHEET NO.	05
ROADWAY DESIGN ENGINEER	HYDRAULICS ENGINEER

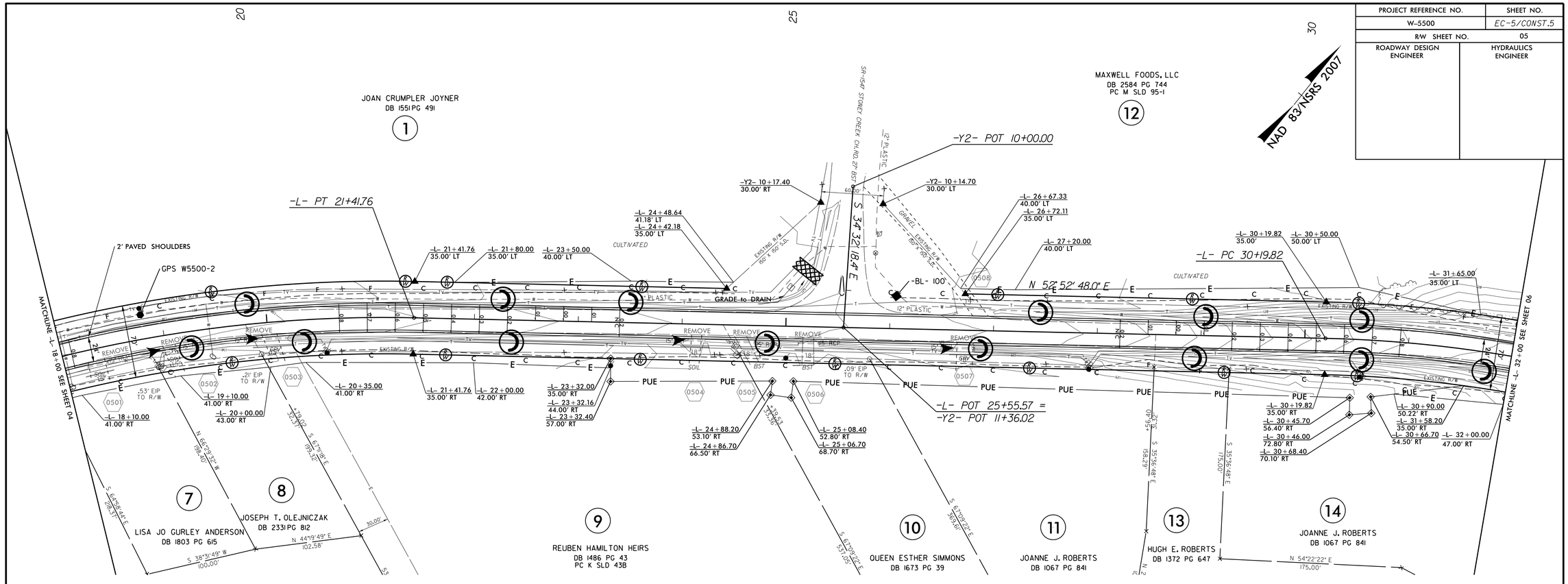

NOTE:
PLACE TEMPORARY ROCK SEDIMENT DAMS TYPE – B AND TEMPORARY ROCK SILT CHECKS TYPE – A AT DRAINAGE OUTLETS.

CLEARING AND GRUBBING
EROSION CONTROL FOR
CONSTRUCTION SHEET 5

PROJECT REFERENCE NO.	SHEET NO.
W-5500	EC-6/CONST.6
R/W SHEET NO.	06
ROADWAY DESIGN ENGINEER	HYDRAULICS ENGINEER

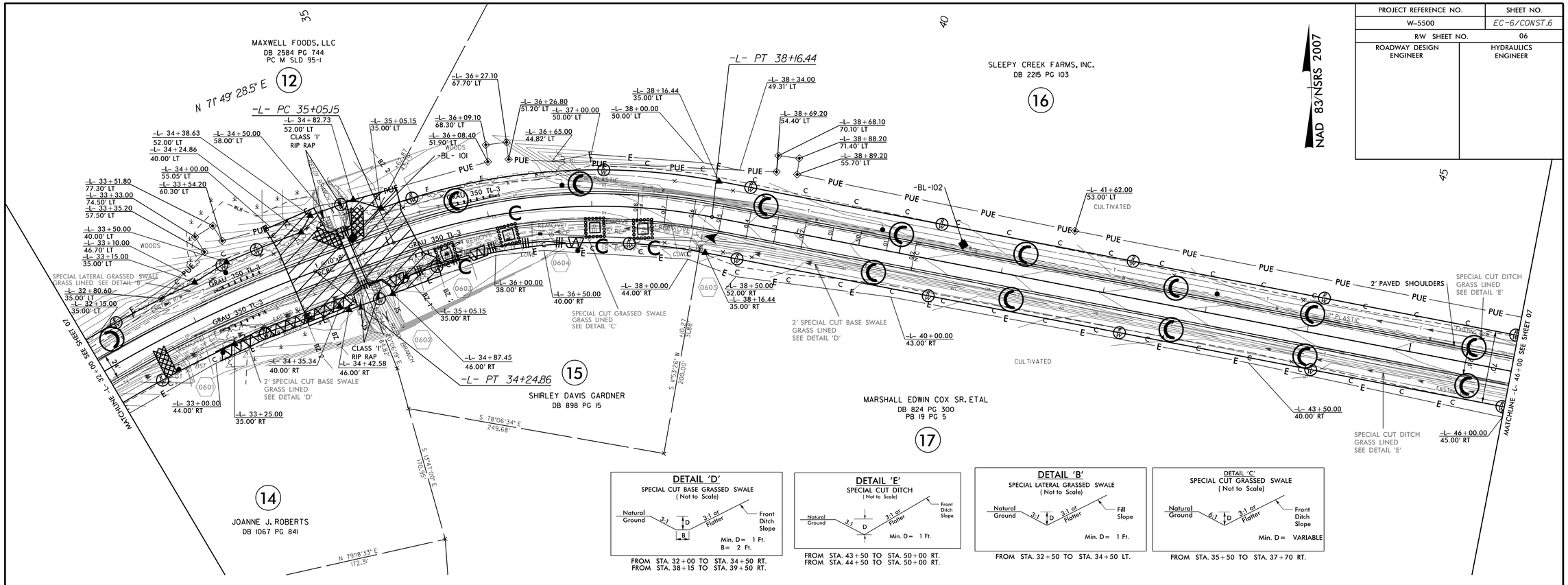

DETAIL 'D'
SPECIAL CUT BASE GRASSED SWALE
(Not to Scale)

FROM STA. 32+00 TO STA. 34+50 RT.
FROM STA. 38+15 TO STA. 39+50 RT.

DETAIL 'E'
SPECIAL CUT DITCH
(Not to Scale)

FROM STA. 43+50 TO STA. 50+00 RT.
FROM STA. 44+50 TO STA. 50+00 RT.

DETAIL 'B'
SPECIAL LATERAL GRASSED SWALE
(Not to Scale)

FROM STA. 32+50 TO STA. 34+50 LT.

DETAIL 'C'
SPECIAL CUT GRASSED SWALE
(Not to Scale)

FROM STA. 35+50 TO STA. 37+70 RT.

ENVIRONMENTALLY SENSITIVE AREA
SEE PROJECT SPECIAL PROVISIONS

NOTE:
PLACE TEMPORARY ROCK SEDIMENT DAMS TYPE – B AND TEMPORARY ROCK SILT CHECKS TYPE – A AT DRAINAGE OUTLETS.

CLEARING AND GRUBBING
EROSION CONTROL FOR
CONSTRUCTION SHEET 6

CULVERT CONSTRUCTION SEQUENCE STA. 34 + 63.25 –L–

PROJECT REFERENCE NO.	SHEET NO.
W-5500	EC-7/CONST.6
R/W SHEET NO.	
ROADWAY DESIGN ENGINEER	HYDRAULICS ENGINEER

1. UTILIZE SPECIAL STILLING BASIN(S) AS NEEDED THROUGHOUT CULVERT CONSTRUCTION.
2. CONSTRUCT TEMPORARY CHANNEL CHANGE WITH LINER (6 FT. BASE, 3 FT. DEEP, 2:1 SIDE SLOPES).
3. CONSTRUCT IMPERVIOUS DIKES, DIVERTING FLOW THROUGH TEMPORARY CHANNEL CHANGE.
4. REMOVE EXISTING CMPA.
5. CONSTRUCT PROPOSED CULVERT, AND ANY NECESSARY UPSTREAM/DOWNSTREAM CHANNEL IMPROVEMENTS.
6. REMOVE IMPERVIOUS DIKES AND TEMPORARY CHANNEL CHANGE, ALLOWING NORMAL FLOW THROUGH CULVERT.
7. REMOVE ANY REMAINING SPECIAL STILLING BASIN(S).
8. COMPLETE ROADWAY.

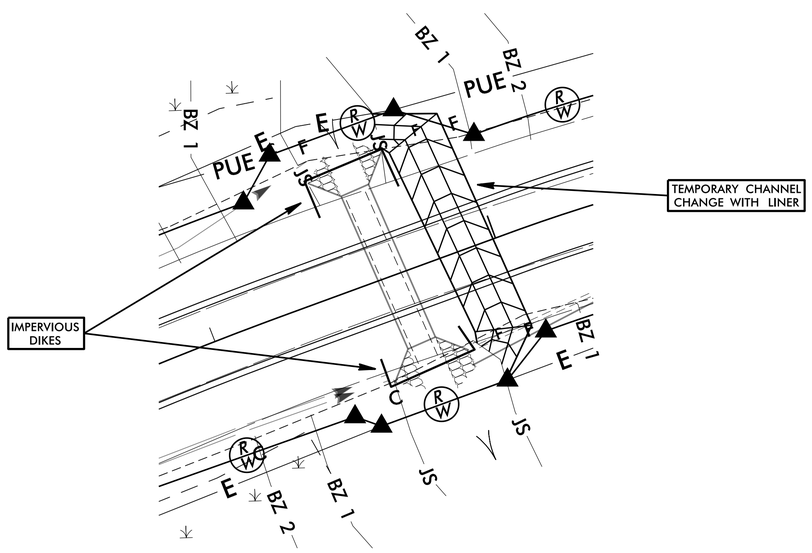

PROJECT REFERENCE NO.	SHEET NO.
W-5500	EC-8/CONST.7
R/W SHEET NO.	07
ROADWAY DESIGN ENGINEER	HYDRAULICS ENGINEER

NAD 83/NSRS 2007

SLEEPY CREEK FARMS, INC.
DB 2215 PG 103

16

DETAIL 'E'
SPECIAL CUT DITCH
(Not to Scale)

FROM STA. 43+50 TO STA. 50+00 RT.
FROM STA. 54+00 TO STA. 59+50 RT.
FROM STA. 54+00 TO STA. 56+50 LT.
FROM STA. 44+50 TO STA. 50+00 LT.

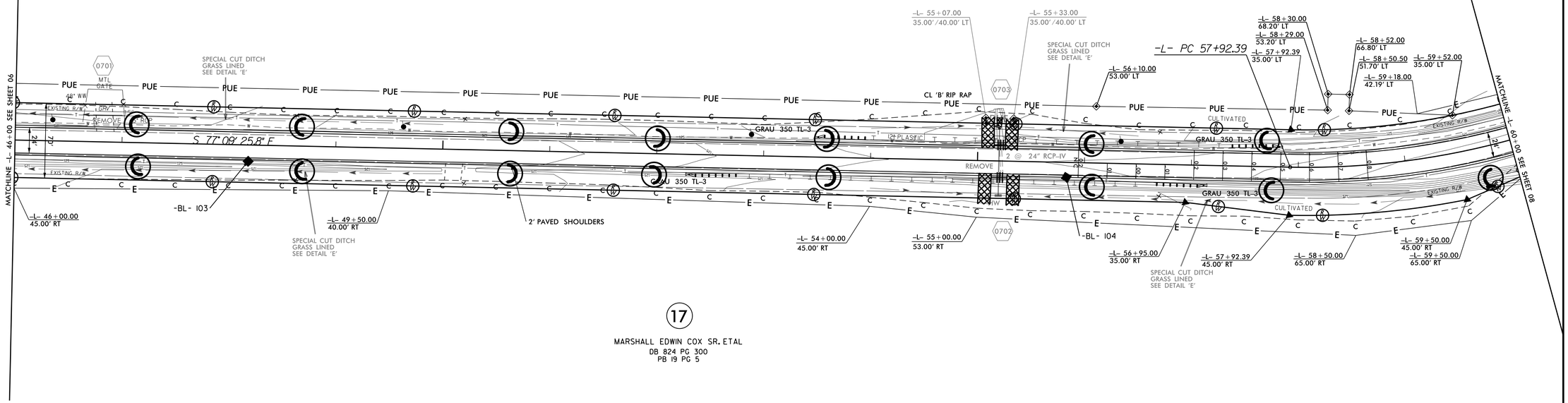

17

MARSHALL EDWIN COX SR. ETAL
DB 824 PG 300
PB 19 PG 5

CLEARING AND GRUBBING
EROSION CONTROL FOR
CONSTRUCTION SHEET 7

NOTE:
PLACE TEMPORARY ROCK SEDIMENT DAMS TYPE – B AND TEMPORARY ROCK SILT CHECKS TYPE – A AT DRAINAGE OUTLETS.

PROJECT REFERENCE NO.	SHEET NO.
W-5500	EC-9/CONST.8
R/W SHEET NO.	08
ROADWAY DESIGN ENGINEER	HYDRAULICS ENGINEER

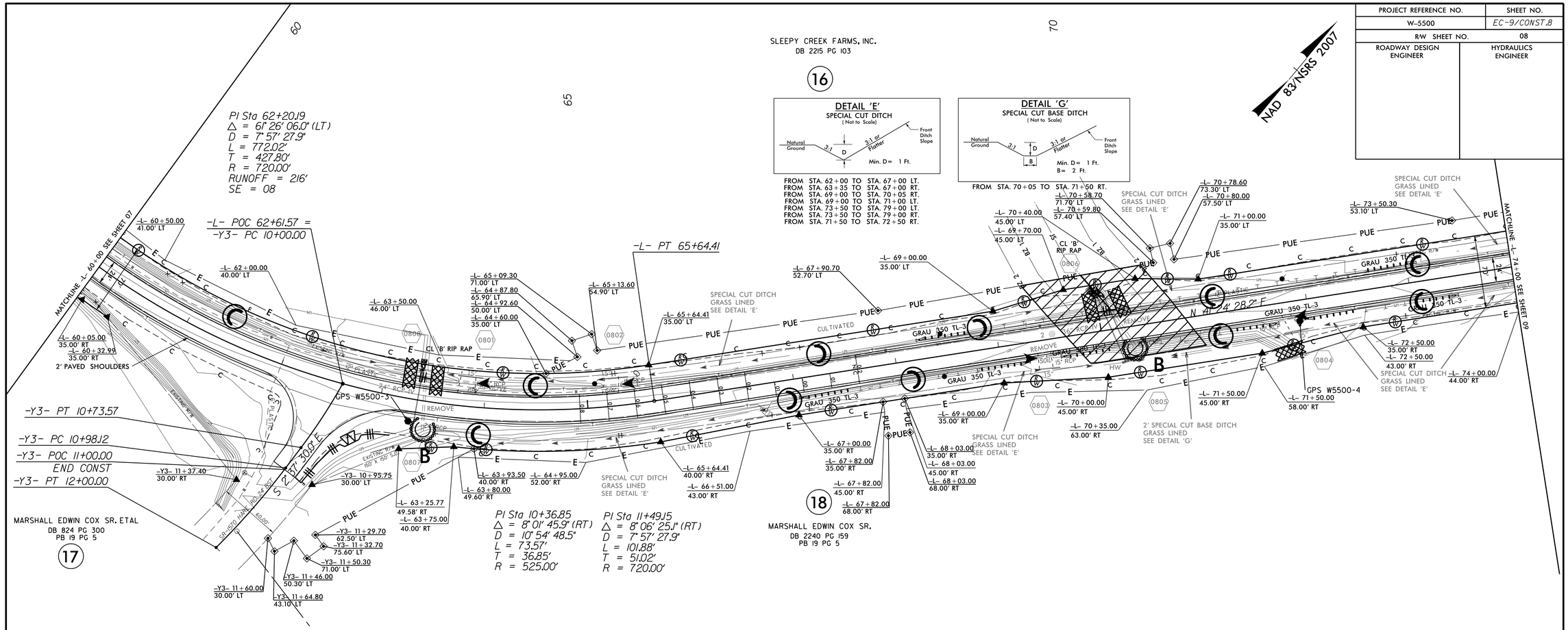

NOTE:
UTILIZE TEMPORARY SEDIMENT BASIN OR SPECIAL STILLING BASIN(S) AS STILLING BASIN WHERE APPLICABLE.

ENVIRONMENTALLY SENSITIVE AREA
SEE PROJECT SPECIAL PROVISIONS

NOTE:
PLACE TEMPORARY ROCK SEDIMENT DAMS TYPE – B AND TEMPORARY ROCK SILT CHECKS TYPE – A AT DRAINAGE OUTLETS.

CLEARING AND GRUBBING
EROSION CONTROL FOR
CONSTRUCTION SHEET 8

PROJECT REFERENCE NO.	SHEET NO.
W-5500	EC-10/CONST.9
R/W SHEET NO.	09
ROADWAY DESIGN ENGINEER	HYDRAULICS ENGINEER

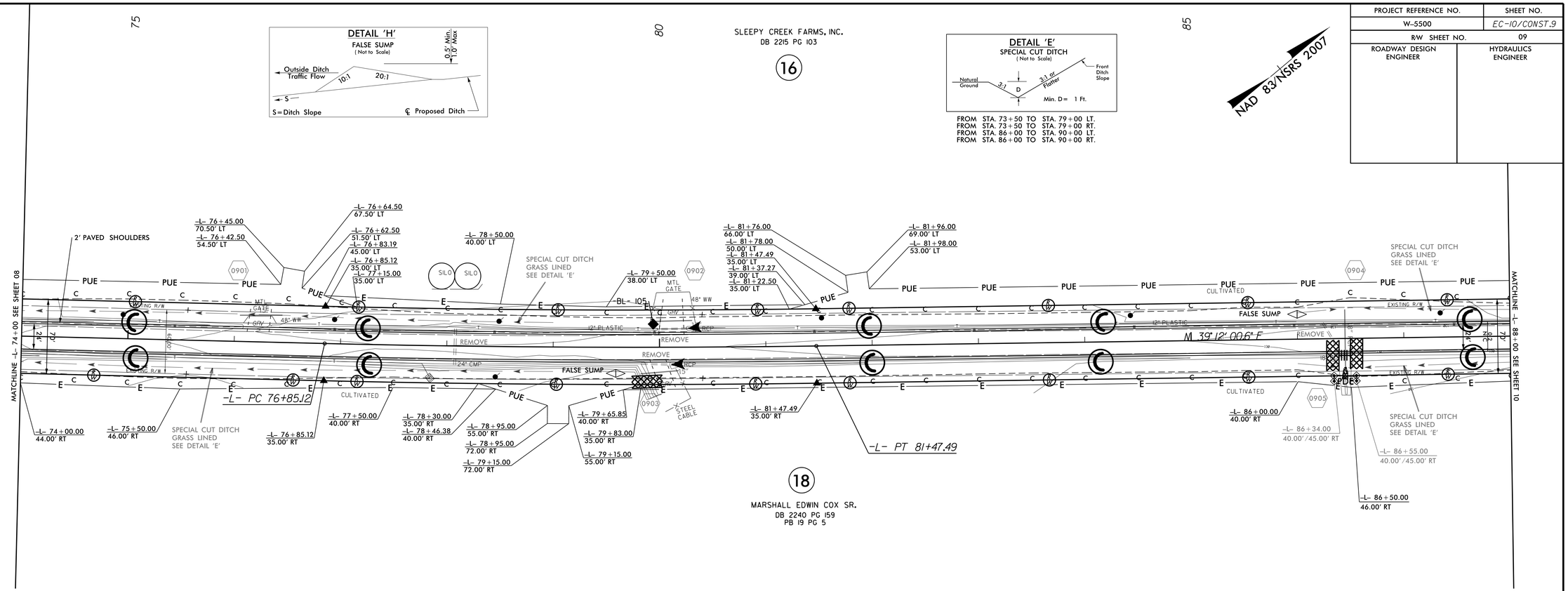

NOTE:
PLACE TEMPORARY ROCK SEDIMENT DAMS TYPE – B AND TEMPORARY ROCK SILT CHECKS TYPE – A AT DRAINAGE OUTLETS.

CLEARING AND GRUBBING
EROSION CONTROL FOR
CONSTRUCTION SHEET 9

REVISIONS

DDC4

PROJECT REFERENCE NO.	SHEET NO.
W-5500	EC-11/CONST.10
R/W SHEET NO.	10
ROADWAY DESIGN ENGINEER	HYDRAULICS ENGINEER

NAD 83/NSRS 2007

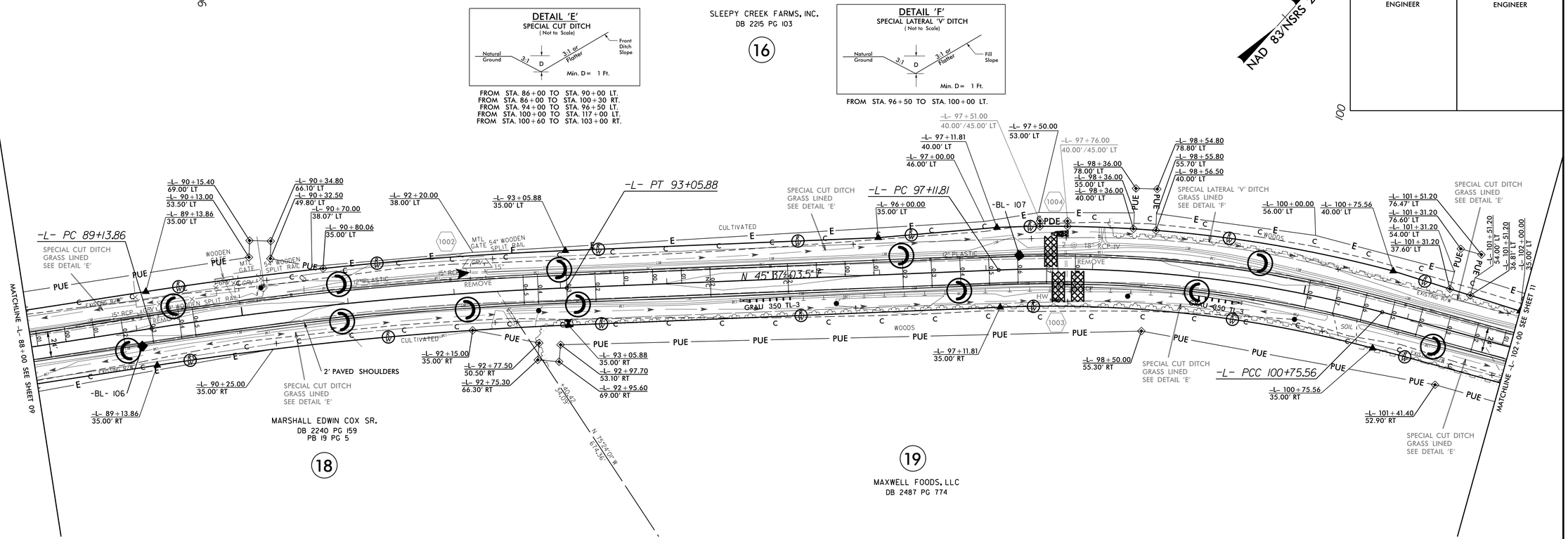

NOTE:
PLACE TEMPORARY ROCK SEDIMENT DAMS TYPE – B AND TEMPORARY ROCK SILT CHECKS TYPE – A AT DRAINAGE OUTLETS.

CLEARING AND GRUBBING
EROSION CONTROL FOR
CONSTRUCTION SHEET 10

PROJECT REFERENCE NO.	SHEET NO.
W-5500	EC-12/CONST.11
R/W SHEET NO.	11
ROADWAY DESIGN ENGINEER	HYDRAULICS ENGINEER

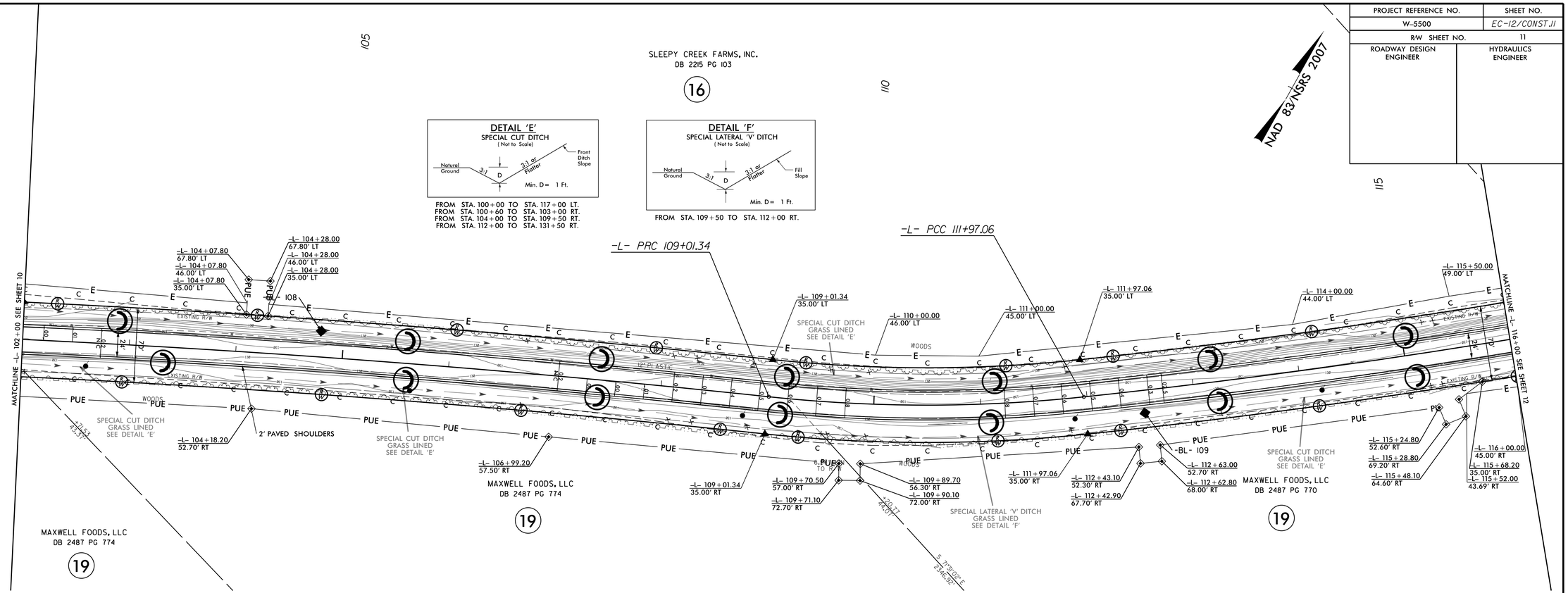

NOTE:
PLACE TEMPORARY ROCK SEDIMENT DAMS TYPE – B AND TEMPORARY ROCK SILT CHECKS TYPE – A AT DRAINAGE OUTLETS.

CLEARING AND GRUBBING
EROSION CONTROL FOR
CONSTRUCTION SHEET 11

PROJECT REFERENCE NO.	SHEET NO.
W-5500	EC-13/CONST.12
R/W SHEET NO.	12
ROADWAY DESIGN ENGINEER	HYDRAULICS ENGINEER

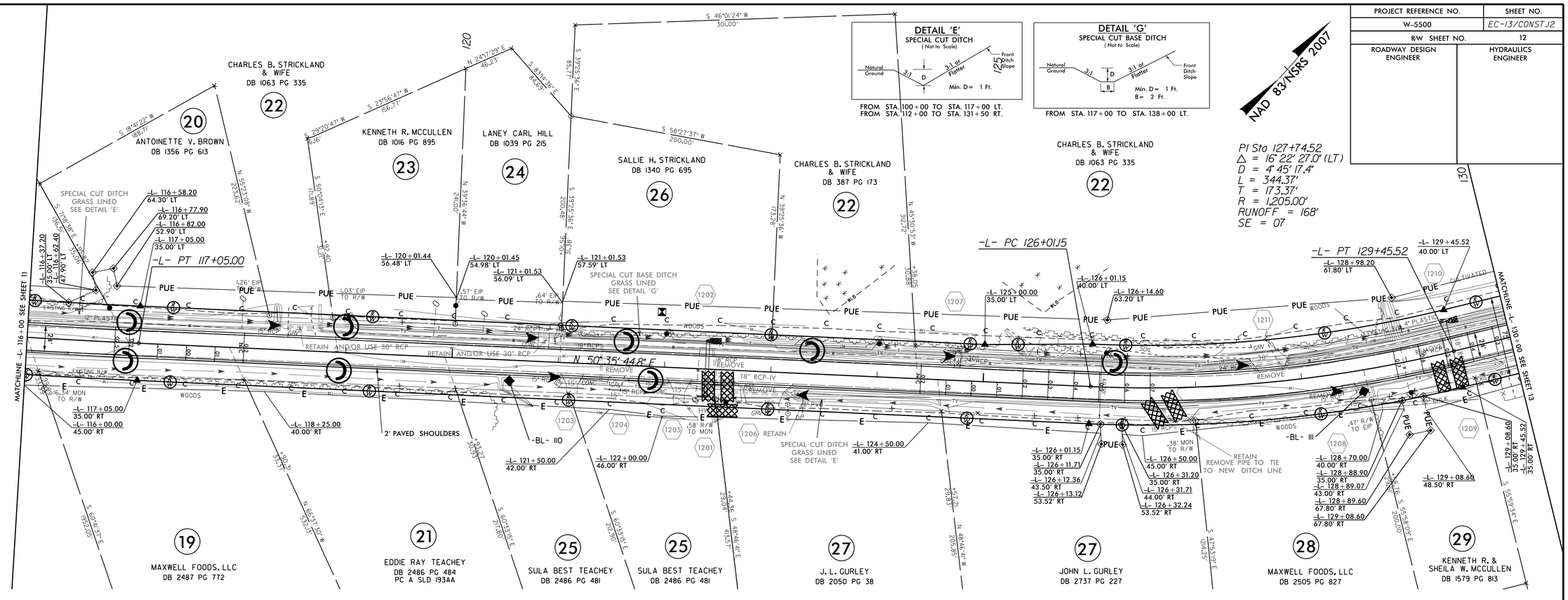

NOTE:
PLACE TEMPORARY ROCK SEDIMENT DAMS TYPE – B AND TEMPORARY ROCK SILT CHECKS TYPE – A AT DRAINAGE OUTLETS.

CLEARING AND GRUBBING
EROSION CONTROL FOR
CONSTRUCTION SHEET 12

PROJECT REFERENCE NO.	SHEET NO.
W-5500	EC-14/CONST.13
R/W SHEET NO.	13
ROADWAY DESIGN ENGINEER	HYDRAULICS ENGINEER

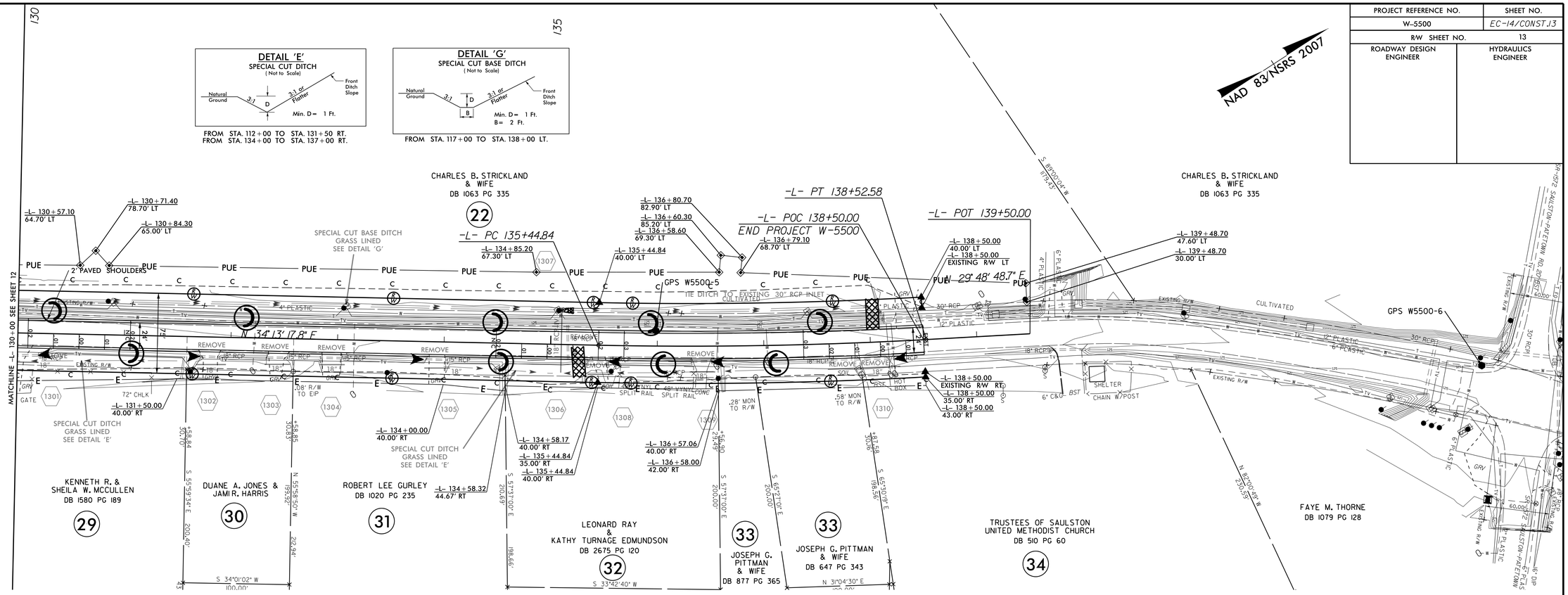

NOTE:
PLACE TEMPORARY ROCK SEDIMENT DAMS TYPE – B AND TEMPORARY ROCK SILT CHECKS TYPE – A AT DRAINAGE OUTLETS.

CLEARING AND GRUBBING
EROSION CONTROL FOR
CONSTRUCTION SHEET 13

PROJECT REFERENCE NO.	SHEET NO.
W-5500	EC-15/CONST.4
R/W SHEET NO.	04
ROADWAY DESIGN ENGINEER	HYDRAULICS ENGINEER

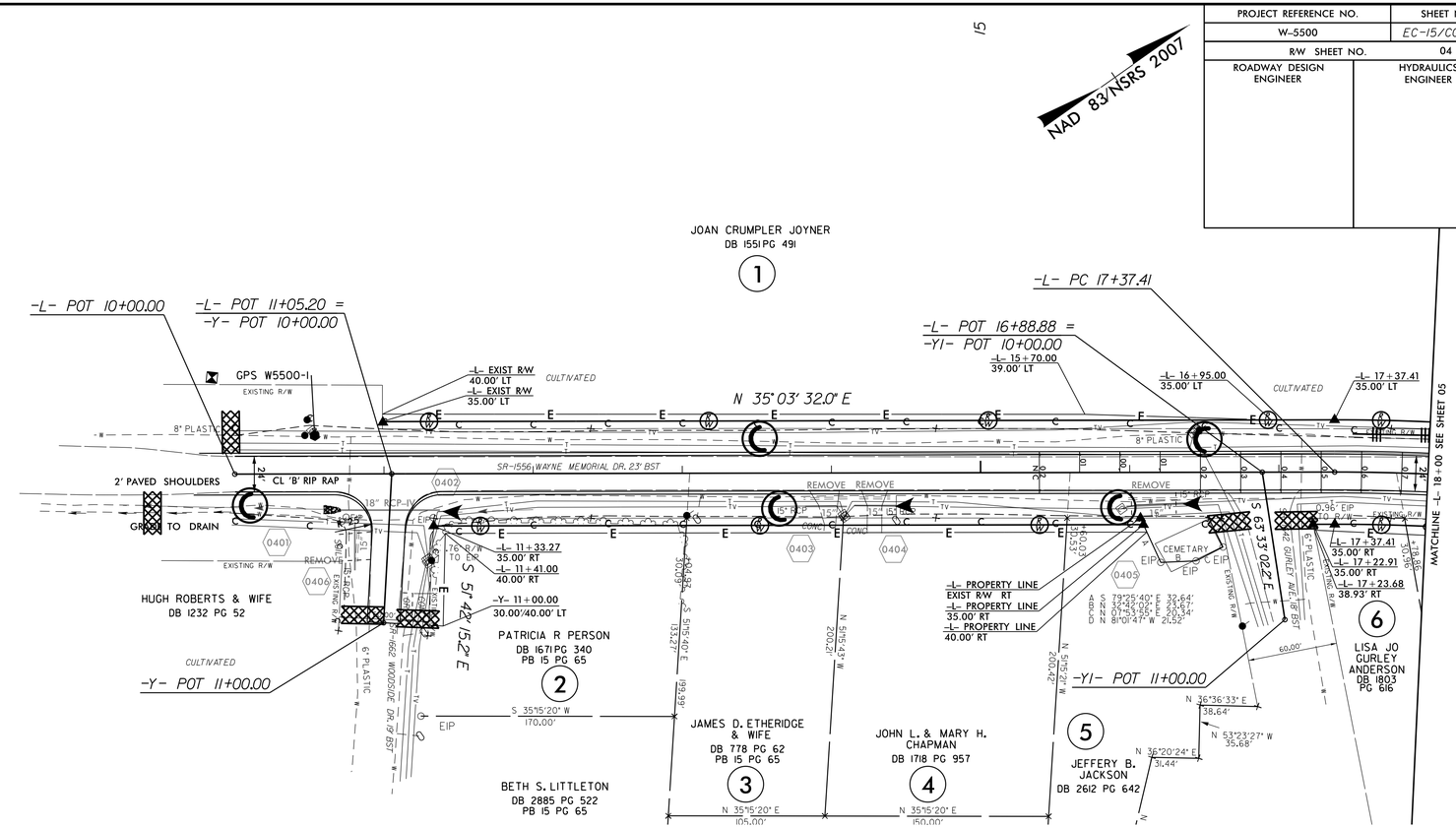

PROJECT REFERENCE NO.	SHEET NO.
W-5500	EC-16/CONST.5
R/W SHEET NO.	05
ROADWAY DESIGN ENGINEER	HYDRAULICS ENGINEER

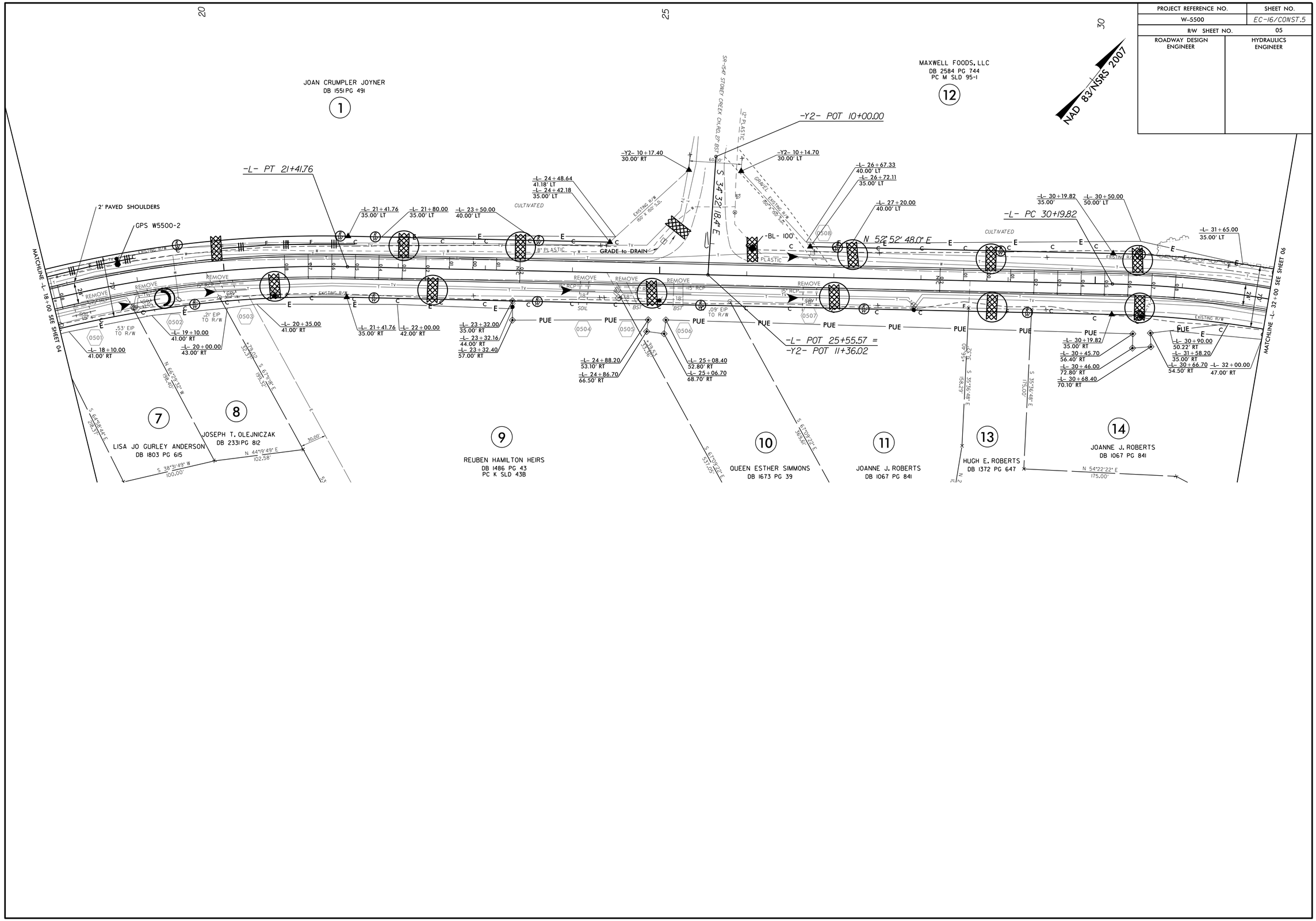

PROJECT REFERENCE NO.	SHEET NO.
W-5500	EC-17/CONST.6
R/W SHEET NO.	06
ROADWAY DESIGN ENGINEER	HYDRAULICS ENGINEER

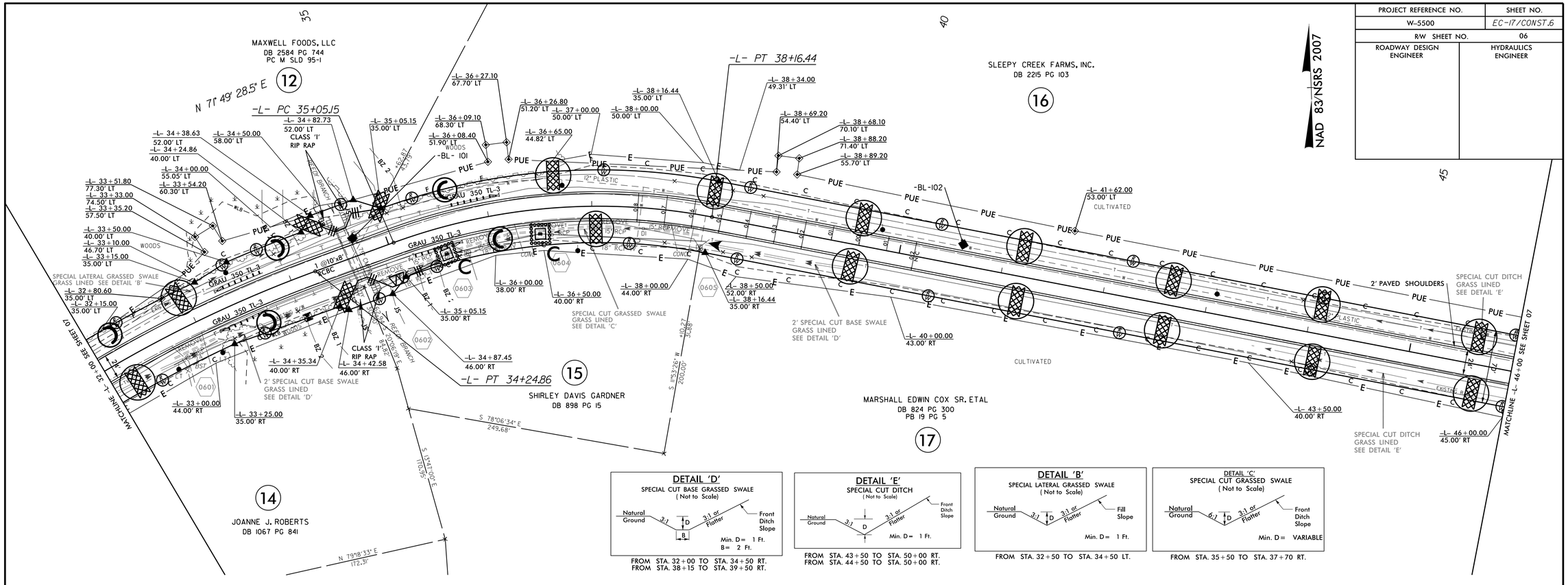

DETAIL 'D'
SPECIAL CUT BASE GRASSED SWALE
(Not to Scale)

FROM STA. 32+00 TO STA. 34+50 RT.
FROM STA. 38+15 TO STA. 39+50 RT.

DETAIL 'E'
SPECIAL CUT DITCH
(Not to Scale)

FROM STA. 43+50 TO STA. 50+00 RT.
FROM STA. 44+50 TO STA. 50+00 RT.

DETAIL 'B'
SPECIAL LATERAL GRASSED SWALE
(Not to Scale)

FROM STA. 32+50 TO STA. 34+50 LT.

DETAIL 'C'
SPECIAL CUT GRASSED SWALE
(Not to Scale)

FROM STA. 35+50 TO STA. 37+70 RT.

PROJECT REFERENCE NO.	SHEET NO.
W-5500	EC-18/CONST.7
R/W SHEET NO.	07
ROADWAY DESIGN ENGINEER	HYDRAULICS ENGINEER

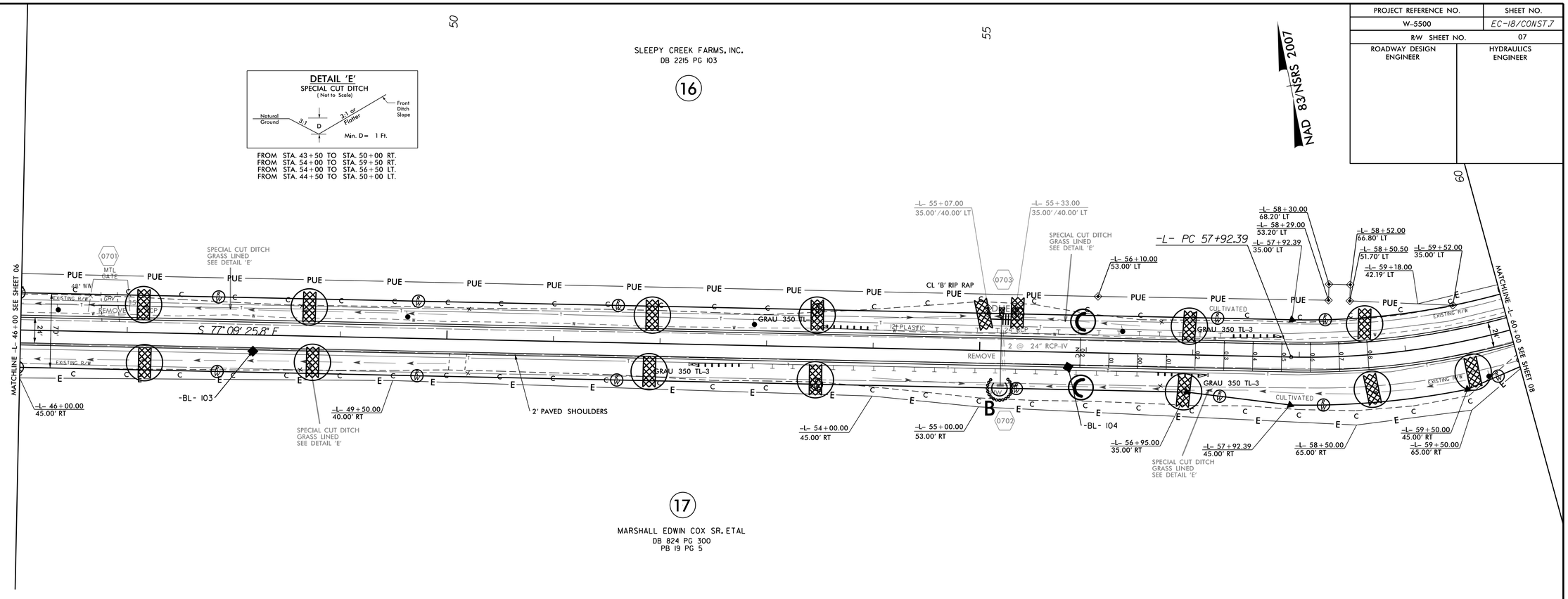

PROJECT REFERENCE NO.	SHEET NO.
W-5500	EC-19/CONST.8
R/W SHEET NO.	08
ROADWAY DESIGN ENGINEER	HYDRAULICS ENGINEER

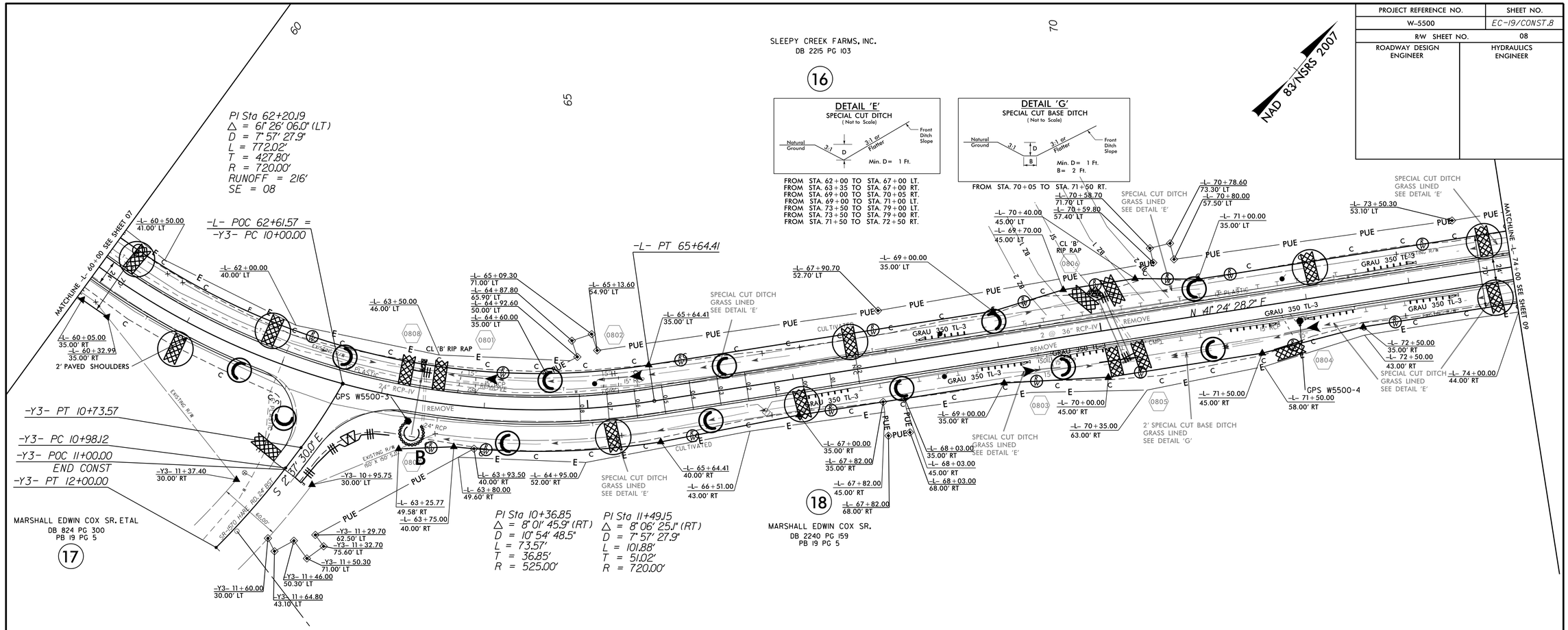

NOTE:
UTILIZE TEMPORARY SEDIMENT BASIN OR SPECIAL STILLING BASIN(S) AS STILLING BASIN WHERE APPLICABLE.

DDC4

PROJECT REFERENCE NO.	SHEET NO.
W-5500	EC-20/CONST.9
R/W SHEET NO.	09
ROADWAY DESIGN ENGINEER	HYDRAULICS ENGINEER

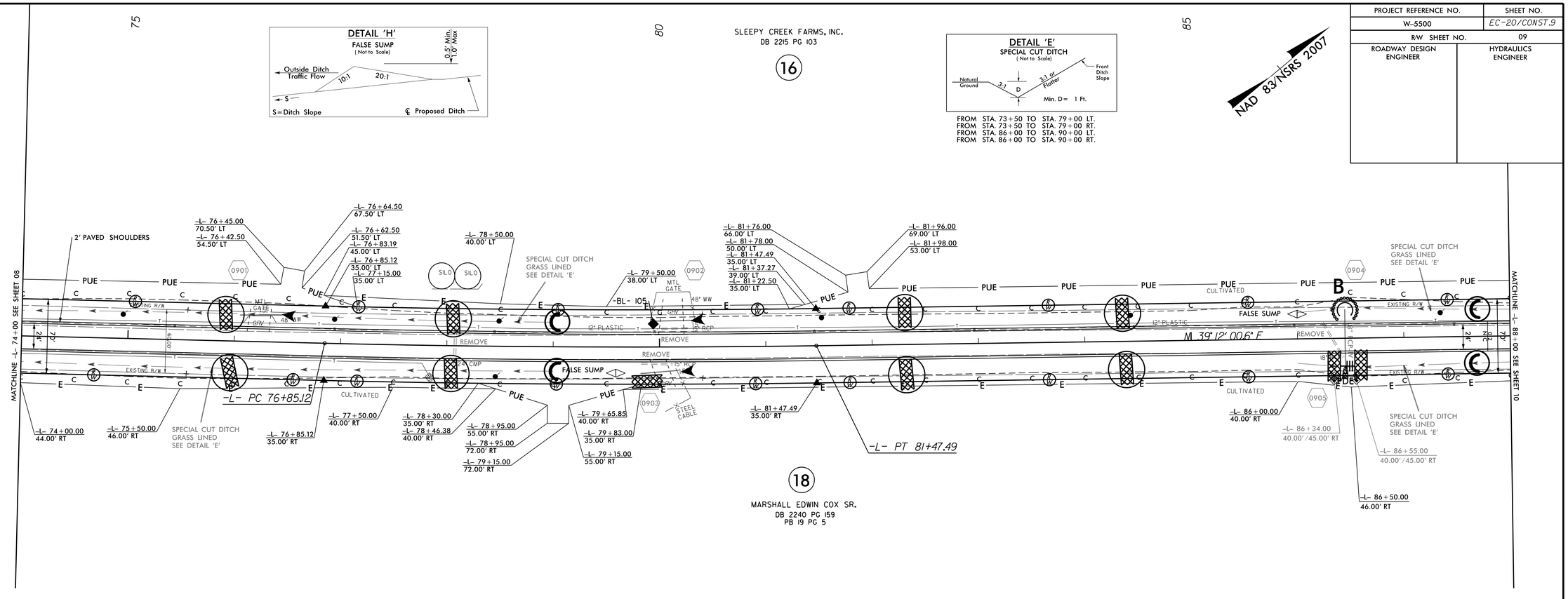

REVISIONS

PROJECT REFERENCE NO.	SHEET NO.
W-5500	EC-21/CONST.10
R/W SHEET NO.	10
ROADWAY DESIGN ENGINEER	HYDRAULICS ENGINEER

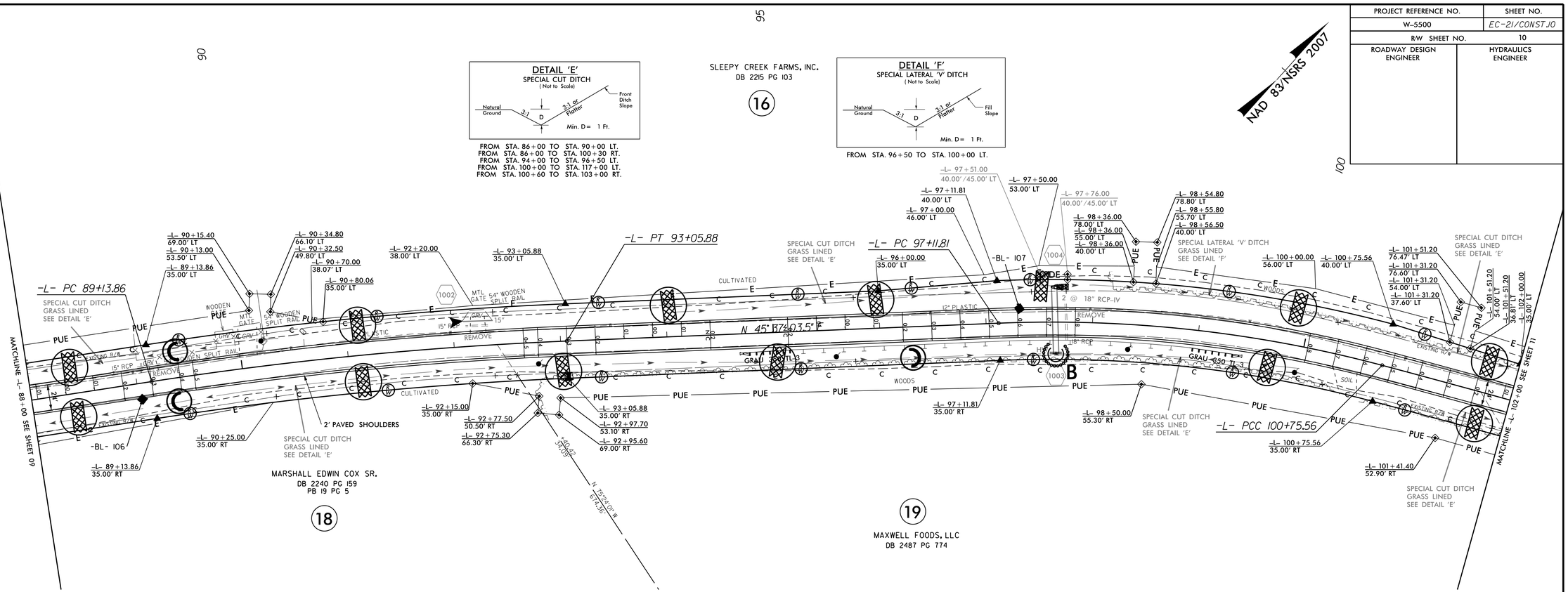

PROJECT REFERENCE NO.	SHEET NO.
W-5500	EC-22/CONST.II
R/W SHEET NO.	11
ROADWAY DESIGN ENGINEER	HYDRAULICS ENGINEER

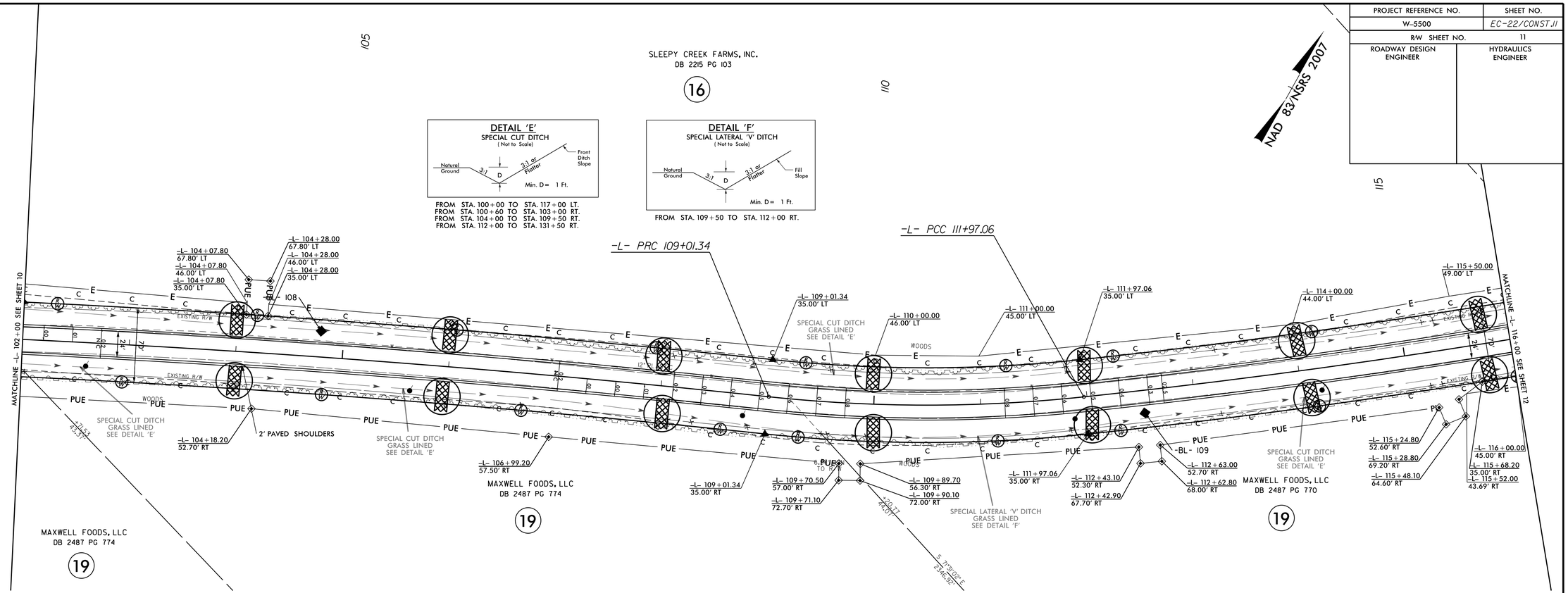

PROJECT REFERENCE NO.	SHEET NO.
W-5500	EC-23/CONST.12
R/W SHEET NO.	12
ROADWAY DESIGN ENGINEER	HYDRAULICS ENGINEER

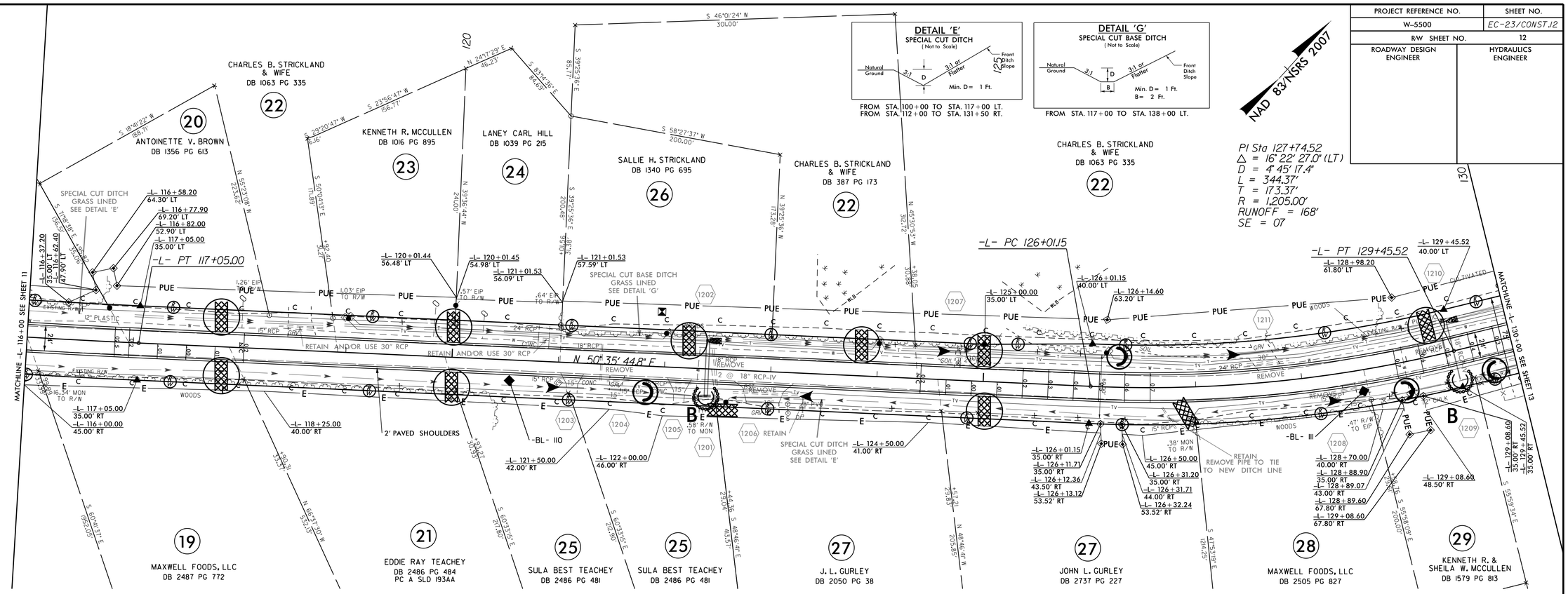

PROJECT REFERENCE NO.	SHEET NO.
W-5500	EC-24/CONST.J3
R/W SHEET NO.	13
ROADWAY DESIGN ENGINEER	HYDRAULICS ENGINEER

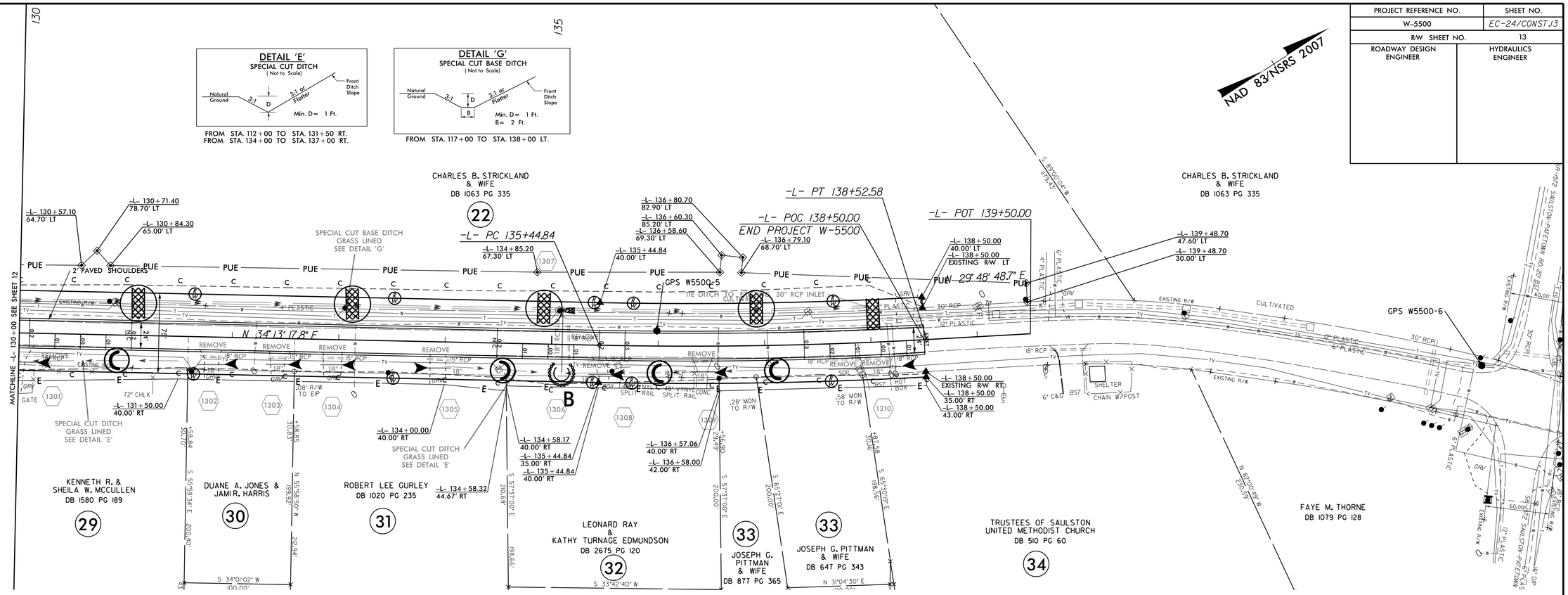

PROJECT REFERENCE NO.	SHEET NO.
W-5500	RF-1
R/W SHEET NO.	
ROADWAY DESIGN ENGINEER	HYDRAULICS ENGINEER

PLANTING DETAILS

SEEDLING / LINER BAREROOT PLANTING DETAIL

HEALING IN

1. Locate a healing-in site in a shady, well protected area.
2. Excavate a flat bottom trench 12 inches deep and provide drainage.

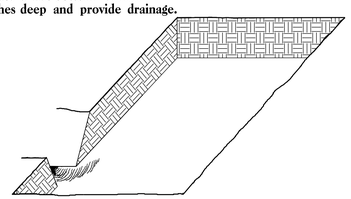

3. Backfill the trench with 2 inches well rotted sawdust. Place a 2 inch layer of well rotted sawdust at a sloping angle at one end of the trench.

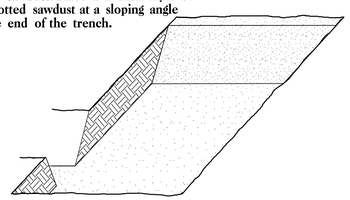

4. Place a single layer of plants against the sloping end so that the root collar is at ground level.

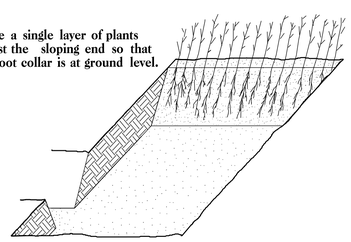

5. Place a 2 inch layer of well rotted sawdust over the roots maintaining a sloping angle.

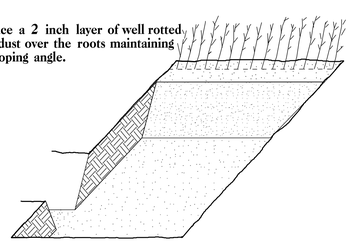

6. Repeat layers of plants and sawdust as necessary and water thoroughly.

DOUBLE PLANTING METHOD
USING THE KBC PLANTING BAR

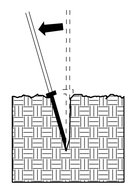

1. Insert planting bar as shown and pull handle toward planter.

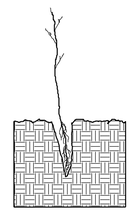

2. Remove planting bar and place seedling at correct depth.

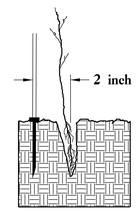

3. Insert planting bar 2 inches toward planter from seedling.

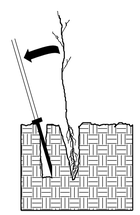

4. Pull handle of bar toward planter, firming soil at bottom.

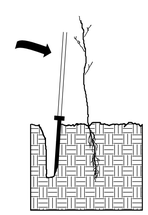

5. Push handle forward firming soil at top.

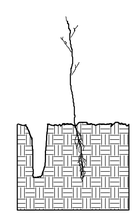

6. Leave compaction hole open. Water thoroughly.

PLANTING NOTES:

PLANTING BAG
During planting, seedlings shall be kept in a moist canvas bag or similar container to prevent the root systems from drying.

KBC PLANTING BAR
Planting bar shall have a blade with a triangular cross section, and shall be 12 inches long, 4 inches wide and 1 inch thick at center.

ROOT PRUNING
All seedlings shall be root pruned, if necessary, so that no roots extend more than 10 inches below the root collar.

REFORESTATION

☐ TREE REFORESTATION SHALL BE PLANTED 6 FT. TO 10 FT. ON CENTER, RANDOM SPACING, AVERAGING 8 FT. ON CENTER, APPROXIMATELY 680 PLANTS PER ACRE.

REFORESTATION

MIXTURE, TYPE, SIZE, AND FURNISH SHALL CONFORM TO THE FOLLOWING:

34%	PLATANUS OCCIDENTALIS	AMERICAN SYCAMORE	12 in - 18 in BR
33%	LIRIODENDRON TULIPIFERA	YELLOW POPLAR	12 in - 18 in BR
33%	FRAXINUS PENNSYLVANICA	GREEN ASH	12 in - 18 in BR

REFORESTATION DETAIL SHEET

N.C.D.O.T. - ROADSIDE ENVIRONMENTAL UNIT

TIP NO.	SHEET NO.
W-5500	SIGN-1

APPROVED: DocuSigned by: Ayman Alqudwah F32AC5CAF965472...

DATE: 1/5/2017

SEAL

NORTH CAROLINA PROFESSIONAL SEAL 028387 ENGINEER AYMAN I. ALQUDWAH

DOCUMENT NOT CONSIDERED FINAL UNLESS ALL SIGNATURES COMPLETED

STATE OF NORTH CAROLINA
DEPARTMENT OF TRANSPORTATION

SIGNING PLAN

WAYNE COUNTY

LOCATION: SR–1556 (WAYNE MEMORIAL DRIVE) FROM SR–1622 (WOODSIDE DRIVE) TO 0.1 MILES SOUTHWEST OF SR–1572 (SAULSTON ROAD).

T.I.P.: W–5500

ROADWAY STANDARD DRAWING

THE FOLLOWING ROADWAY STANDARDS AS APPEAR IN "ROADWAY STANDARD DRAWINGS" - PROJECT SERVICES UNIT - N.C. DEPARTMENT OF TRANSPORTATION - RALEIGH, N.C., DATED JANUARY 2012 ARE APPLICABLE TO THIS PROJECT AND BY REFERENCE HEREBY ARE CONSIDERED A PART OF THESE PLANS:

STD. NO.	TITLE
901.50	ARROWS AND SHIELDS
904.10	ORIENTATION OF GROUND MOUNTED SIGNS
904.50	MOUNTING OF TYPE 'D', 'E' AND 'F' SIGNS ON 'U' CHANNEL POSTS

GENERAL NOTES

- SIGNS FURNISHED BY STATE
- IF REMOVAL OR RELOCATION OF SIGNS ON PRIVATE STREET (NON-STATE MAINTAINED) IS REQUIRED DUE TO CONSTRUCTION, THE CONTRACTOR SHALL INFORM THE ENGINEER. THE WORK WILL BE COMPLETED BY OTHERS.
- SIGNING PLANS DO NOT INCLUDE TEMPORARY CONSTRUCTION SIGNING OR PAVEMENT MARKINGS. SEE TRAFFIC CONTROL PLANS.
- WHEN NOT STATIONED OR DIMENSIONED ON PLANS, ALL 'E' AND 'F' SIGNS SHALL BE FIELD LOCATED BY THE ENGINEER
- ALL EXISTING SIGNS ON "U" CHANNEL POST WITHIN THE PROJECT LIMITS SHALL BE REMOVED AND DISPOSED OF UNLESS OTHERWISE NOTED ON PLANS.
- WHEN EXISTING SIGNS ARE REMOVED AND INSTALLED ON NEW SUPPORTS, THE RE-ERECTION SHALL IMMEDIATELY FOLLOW THE REMOVAL.
- THE BACKGROUND FOR TYPE E & F SIGNS SHALL BE TYPE C REFLECTIVE SHEETING.
- SEE ROADWAY PLANS FOR GUARD/GUIDE RAIL DETAILS.

SUMMARY OF QUANTITIES

ITEM NO. DESC. NO.	ITEM NO. SECT. NO.	ITEM DESCRIPTION	QUANTITY	UNIT
4072000000	903	SUPPORTS, 3 LB STEEL U-CHANNEL	394	L.F.
4102000000	904	SIGN ERECTION, TYPE E	46	EA.
4155000000	907	DISPOSAL OF SIGN SYSTEM, U-CHANNEL	19	EA.
4158000000	907	DISPOSAL OF SIGN SYSTEM, WOOD	4	EA.

PAY ITEM NOTES

1 DISPOSAL OF SIGN SYSTEM, U-CHANNEL

2 DISPOSAL OF SIGN SYSTEM, WOOD

INDEX

SHEET NO.	DESCRIPTION
SIGN-1	TITLE SHEET
SIGN-2	TYPE E SIGNS SHEET
SIGN-3 - 10	SIGNING DETAIL SHEETS (PROPOSED SIGNS)

PLAN PREPARED BY: N.C.D.O.T. SIGNING AND DELINEATION UNIT

AYMAN I. ALQUDWAH, P.E. — SIGNING & DELINEATION REGIONAL ENGINEER

D. M. EATON, P.E. — SIGNING & DELINEATION PROJECT DESIGN ENGINEER

STATE OF NORTH CAROLINA DEPARTMENT OF TRANSPORTATION

04-JAN-2017 09:21
S:\S&D\Regions\Signing\Basir\TIP Projects\W-5500\Signing\Signing Plan\W-5500_Sgn_SIGN-1 and 2.dgn
meaton AT TE274922

TIP NO.	SHEET NO.
W-5500	SIGN-2

APPROVED: DocuSigned by: Ayman Alqudwah F32AC5CAF965472...

DATE: 1/5/2017

SEAL

NORTH CAROLINA PROFESSIONAL SEAL 028387 ENGINEER AYMAN I. ALQUDWAH

DOCUMENT NOT CONSIDERED FINAL UNLESS ALL SIGNATURES COMPLETED

(401) QUANTITY REQ'D _4_

24" X 30"
R2-1

ONE "U" POST PER SIGN

(402) QUANTITY REQ'D _1_

24" X 30"
R2-1

ONE "U" POST PER SIGN

(403) QUANTITY REQ'D _6_

30" X 30"
R1-1

ONE "U" POST PER SIGN

(404) QUANTITY REQ'D _1_

30" X 30"
W14-2

ONE "U" POST PER SIGN

(405) QUANTITY REQ'D _1_

30" X 30"
W1-2R

ONE "U" POST PER SIGN

(406) QUANTITY REQ'D _4_

18" X 18"
W13-1P

MOUNT BELOW SIGNS 405,407,408, & 409
IN 4 INSTALLATIONS

ONE "U" POST PER SIGN

(407) QUANTITY REQ'D _1_

30" X 30"
W1-2L

ONE "U" POST PER SIGN

(408) QUANTITY REQ'D _1_

36" X 36"
W1-10L

ONE "U" POST PER SIGN

(409) QUANTITY REQ'D _1_

36" X 36"
W1-10R

ONE "U" POST PER SIGN

(410) QUANTITY REQ'D _12_

18" X 24"
W1-8L

ONE "U" POST PER SIGN

(411) QUANTITY REQ'D _12_

18" X 24"
W1-8R

MOUNT BACK TO BACK WITH SIGN 410
IN 12 INSTALLATIONS

ONE "U" POST PER SIGN

(412) QUANTITY REQ'D _1_

36" X 36"
W3-5

ONE "U" POST PER SIGN

(413) QUANTITY REQ'D _1_

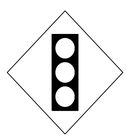

30" X 30"
W3-3

ONE "U" POST PER SIGN

TYPE "E" SIGNS

04-JAN-2017 09:22
S:\S&DU\Regions\Signing\Basir\TIP Projects\W-5500\Signing\Signing Plan\W-5500_Sgn_SIGN-1 and 2.dgn
meaton AT TE274422

TIP NO.	SHEET NO.
W-5500	SIGN-3

APPROVED: DocuSigned by: Ayman Alqudwah F32AC5CAF965472...

DATE: 1/5/2017

SEAL

NORTH CAROLINA PROFESSIONAL SEAL 028387 ENGINEER AYMAN I. ALQUDWAH

DOCUMENT NOT CONSIDERED FINAL UNLESS ALL SIGNATURES COMPLETED

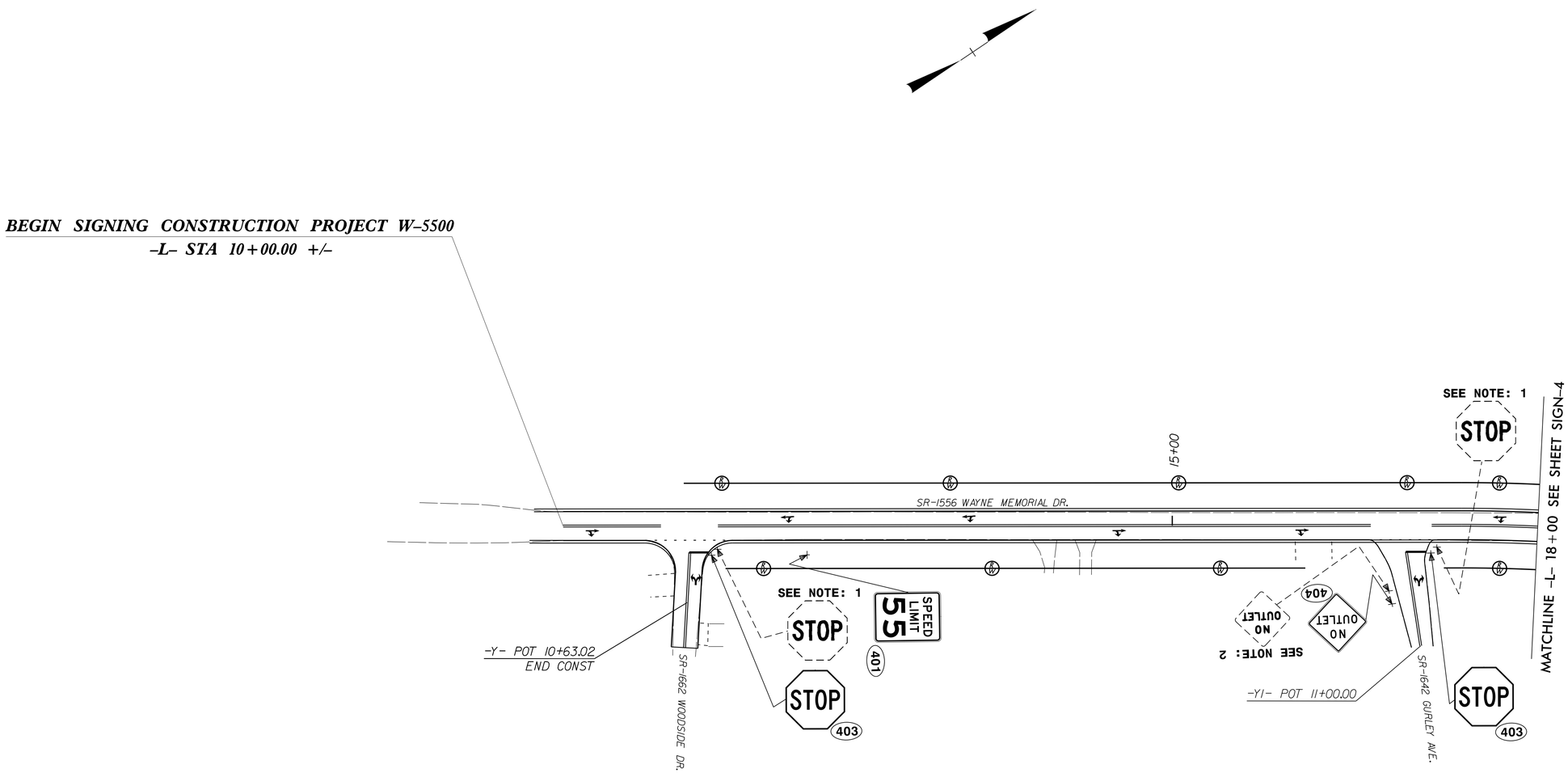

PROPOSED AND EXISTING SIGNS

-L- STA. 10+00 TO STA. 18+00

TIP NO.	SHEET NO.
W-5500	SIGN-4

APPROVED: DocuSigned by: Ayman Alqudwah F32AC5CAF965472...

DATE: 1/5/2017

SEAL

NORTH CAROLINA PROFESSIONAL SEAL 028387 ENGINEER AYMAN I. ALQUDWAH

DOCUMENT NOT CONSIDERED FINAL UNLESS ALL SIGNATURES COMPLETED

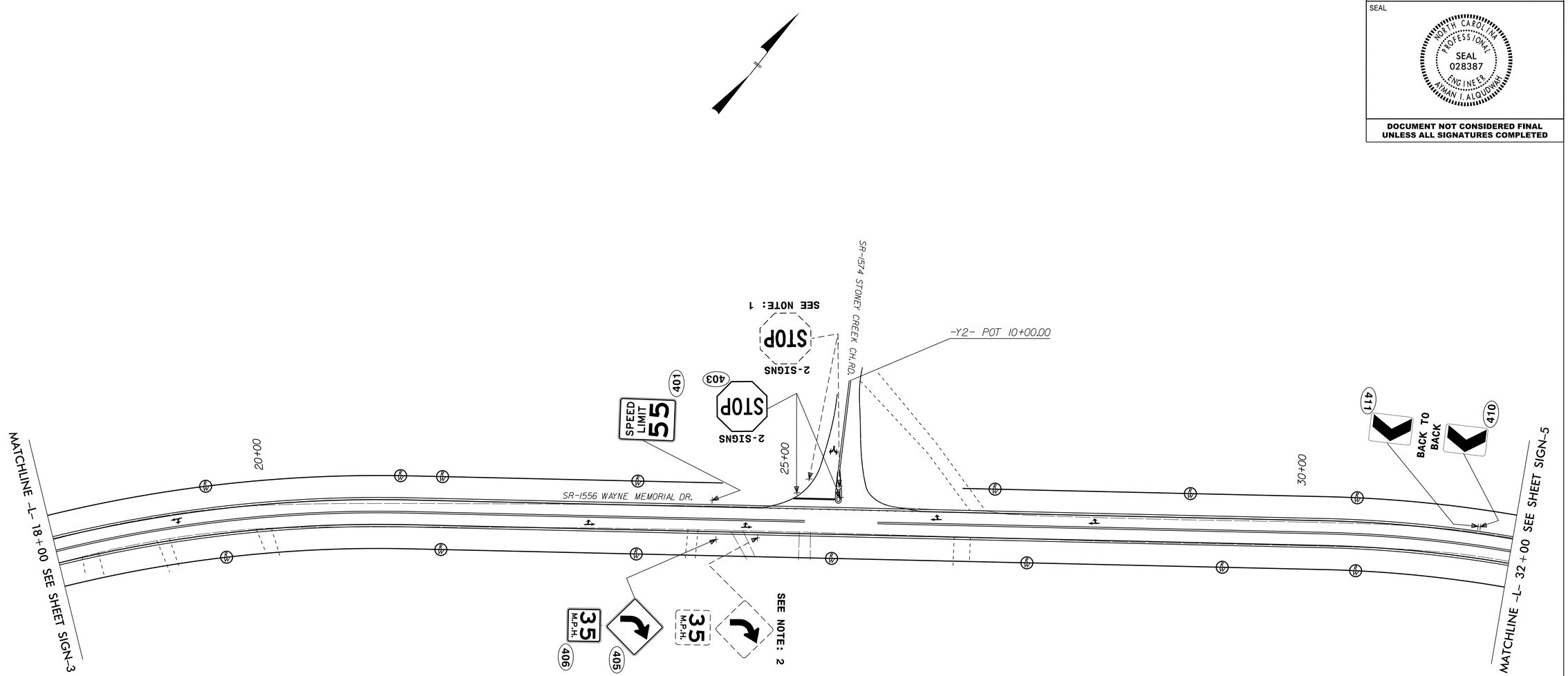

PROPOSED AND EXISTING SIGNS

-L- STA. 18+00 TO STA. 32+00

TIP NO.	SHEET NO.
W-5500	SIGN-5

APPROVED: DocuSigned by: Ayman Alqudwah F32AC5CAF965472...

DATE: 1/5/2017

SEAL

NORTH CAROLINA PROFESSIONAL SEAL 028387 ENGINEER AYMAN I. ALQUDWAH

DOCUMENT NOT CONSIDERED FINAL UNLESS ALL SIGNATURES COMPLETED

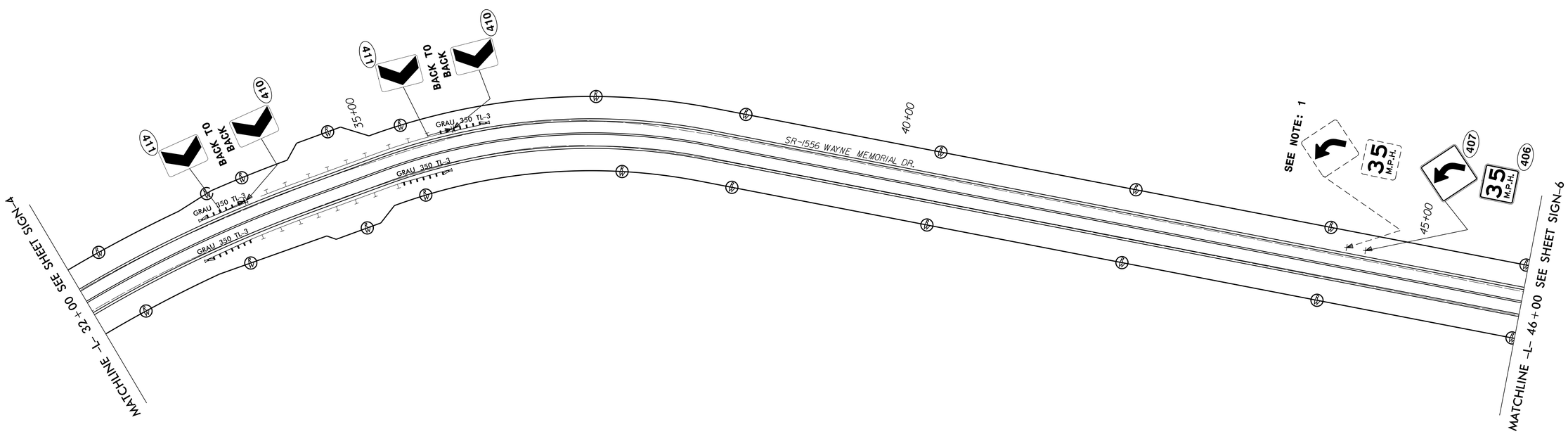

PROPOSED AND EXISTING SIGNS

-L- STA. 32+00 TO STA. 46+00

TIP NO.	SHEET NO.
W-5500	SIGN-6

APPROVED: DocuSigned by: Ayman Alqudwah F32AC5CAF965472...

DATE: 1/5/2017

SEAL

NORTH CAROLINA PROFESSIONAL SEAL 028387 ENGINEER AYMAN I. ALQUDWAH

DOCUMENT NOT CONSIDERED FINAL UNLESS ALL SIGNATURES COMPLETED

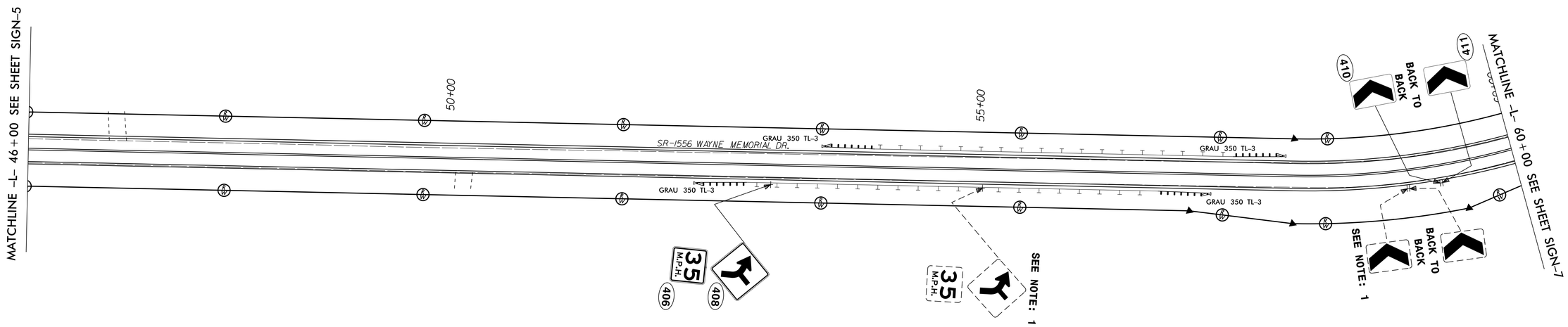

PROPOSED AND EXISTING SIGNS
-L- STA. 46+00 TO STA. 60+00

TIP NO.	SHEET NO.
W-5500	SIGN-7

APPROVED: DocuSigned by: Ayman Alqudwah E32AC5CAF965472...

DATE: 1/5/2017

SEAL

NORTH CAROLINA PROFESSIONAL SEAL 028387 ENGINEER AYMAN I. ALQUDWAH

DOCUMENT NOT CONSIDERED FINAL UNLESS ALL SIGNATURES COMPLETED

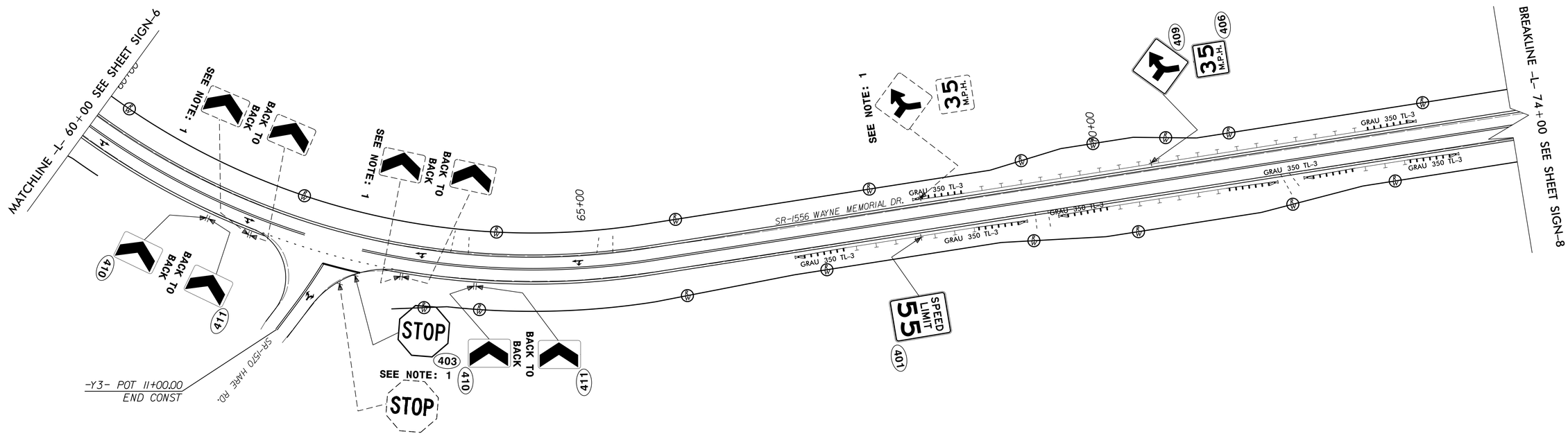

PROPOSED AND EXISTING SIGNS
-L- STA. 60+00 TO STA. 74+00

TIP NO.	SHEET NO.
W-5500	SIGN-8

APPROVED: DocuSigned by: Ayman Alqudwah F32AC5CAF965472...

DATE: 1/5/2017

SEAL

NORTH CAROLINA PROFESSIONAL SEAL 028387 ENGINEER AYMAN I. ALQUDWAH

DOCUMENT NOT CONSIDERED FINAL UNLESS ALL SIGNATURES COMPLETED

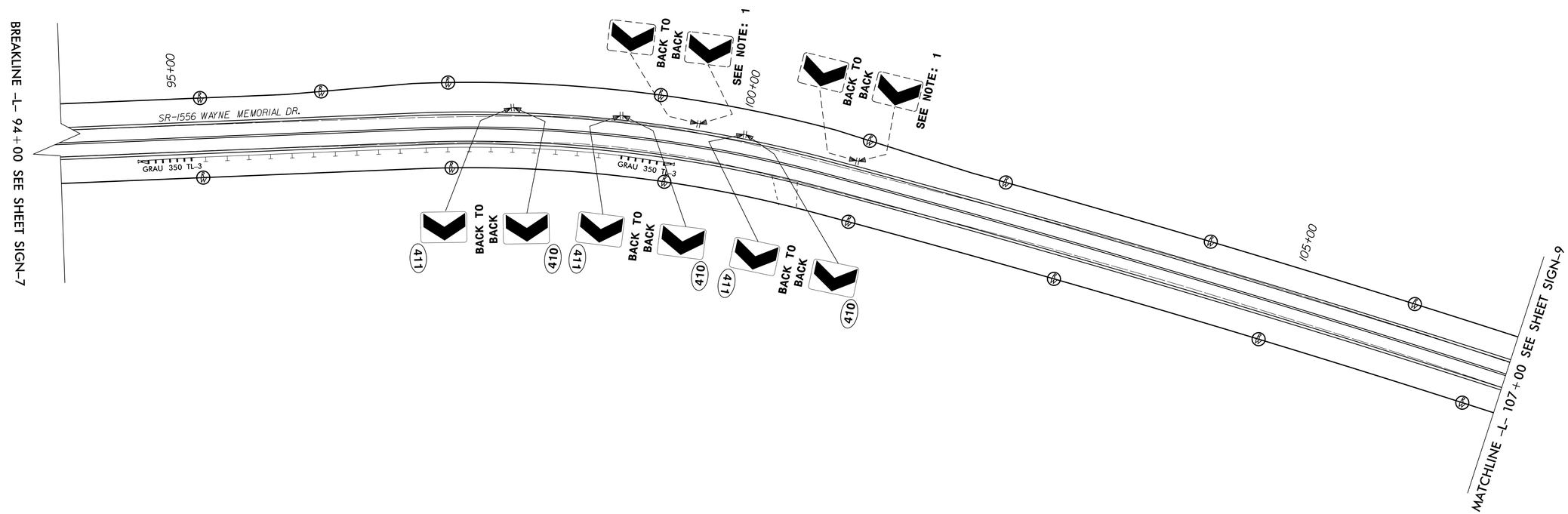

PROPOSED AND EXISTING SIGNS

-L- STA. 94+00 TO STA. 107+00

TIP NO.	SHEET NO.
W-5500	SIGN-9

APPROVED: DocuSigned by: Ayman Alqudwah 72AC5CAF965472...

DATE: 1/5/2017

SEAL

NORTH CAROLINA PROFESSIONAL SEAL 028387 ENGINEER AYMAN I. ALQUDWAH

DOCUMENT NOT CONSIDERED FINAL UNLESS ALL SIGNATURES COMPLETED

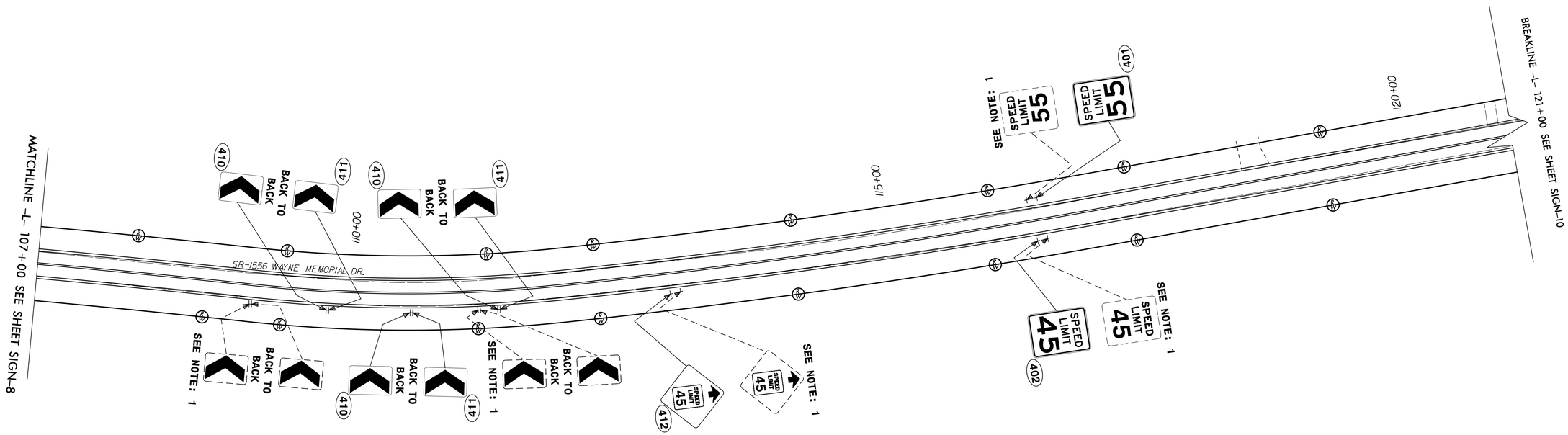

PROPOSED AND EXISTING SIGNS

-L- STA. 107+00 TO STA. 121+00

TIP NO.	SHEET NO.
W-5500	SIGN-10

APPROVED: DocuSigned by: Ayman Alqudwah E32AC5CAF96547...

DATE: 1/5/2017

SEAL

NORTH CAROLINA PROFESSIONAL SEAL 028387 ENGINEER AYMAN I. ALQUDWAH

DOCUMENT NOT CONSIDERED FINAL UNLESS ALL SIGNATURES COMPLETED

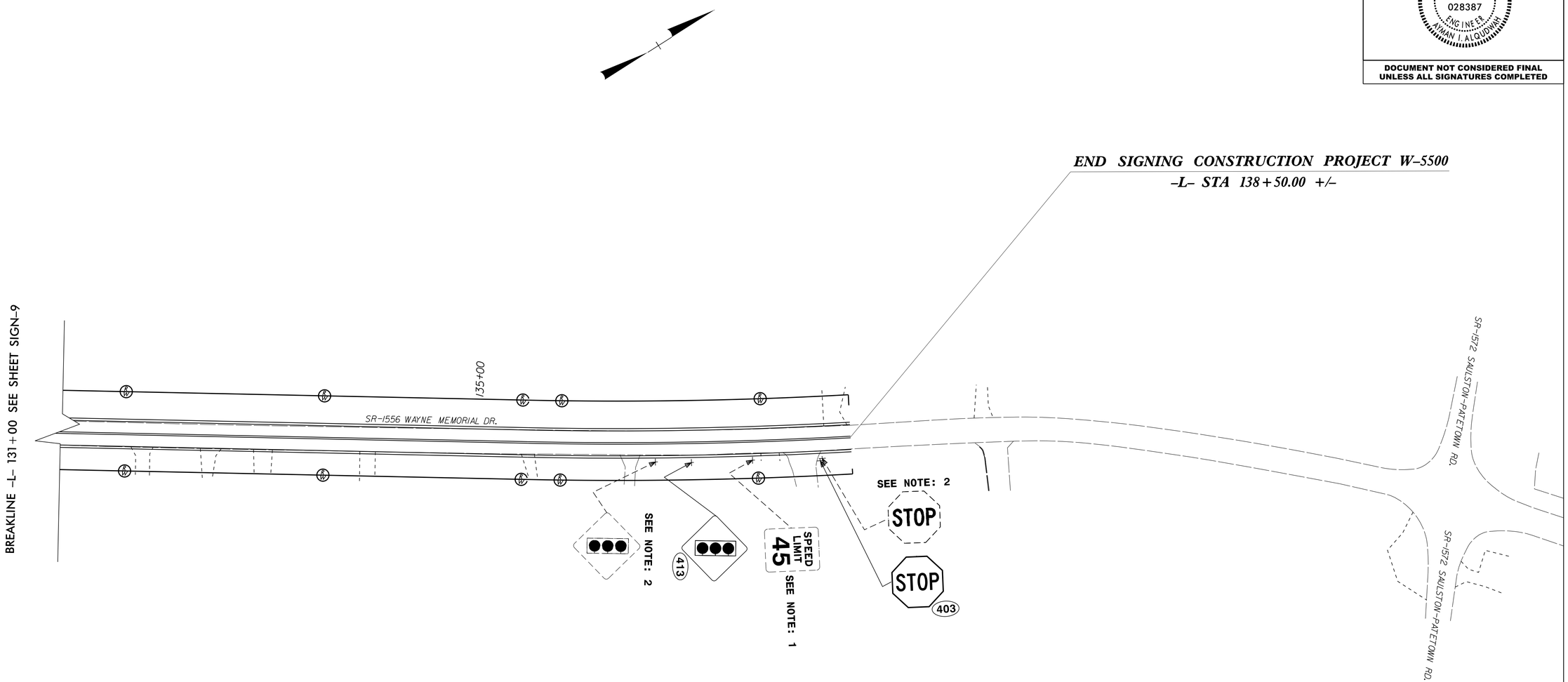

PROPOSED AND EXISTING SIGNS
-L- STA. 131+00 TO STA. 138+50

BM #2: RR SPIKE IN BASE OF 12" OAK, 39' RT OF 34+03.00 -L-, EL. 112.93

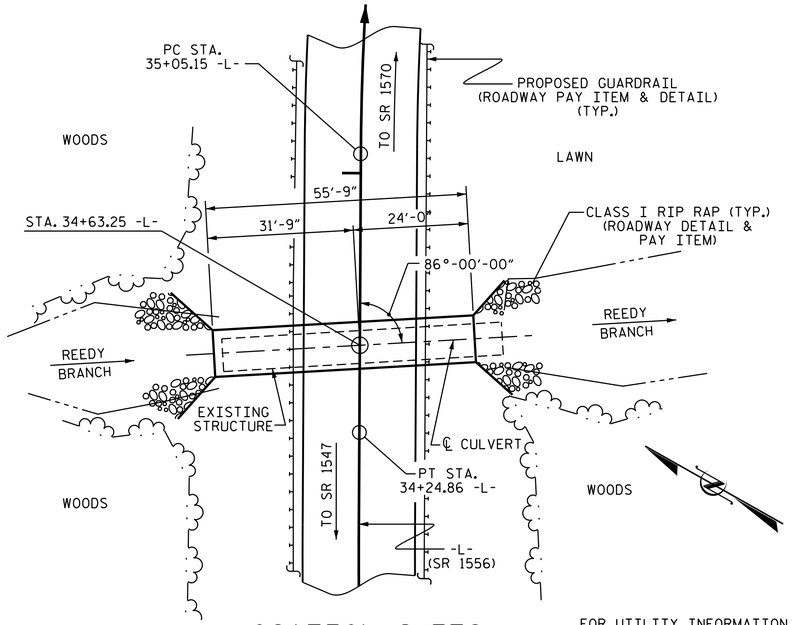

LOCATION SKETCH

FOR UTILITY INFORMATION
SEE UTILITY PLANS AND
SPECIAL PROVISIONS

BILL OF MATERIAL

BAR	NO.	SIZE	TYPE	LENGTH	WEIGHT
A1	224	#4	1	6'-6"	973
A2	224	#4	1	6'-1"	910
A100	112	#6	STR	10'-11"	1836
A200	112	#6	STR	10'-11"	1836
B1	112	#4	STR	8'-11"	667
B2	224	#4	STR	7'-4"	1097
C1	84	#4	STR	28'-9"	1613
D1	8	#6	STR	1'-4"	16
G1	4	#4	STR	11'-0"	29
REINFORCING STEEL					8,977 LBS

BAR TYPES

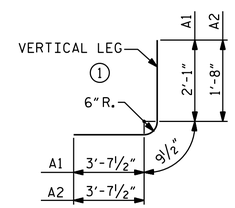

BAR DIMENSIONS ARE OUT TO OUT

SPLICE LENGTH CHART

BAR	SIZE	SPLICE LENGTH
B1	#4	1'-5"
C1	#4	1'-11"

HYDRAULIC DATA

DESIGN DISCHARGE	= 400 C.F.S.
FREQUENCY OF DESIGN FLOOD	= 25 YRS.
DESIGN HIGH WATER ELEVATION	= 112.8
DRAINAGE AREA	= 2.0 SQ. MI.
BASE DISCHARGE (Q100)	= 615 C.F.S.
BASE HIGH WATER ELEVATION	= 114.43

OVERTOPPING FLOOD DATA

OVERTOPPING DISCHARGE	= 930 C.F.S.
FREQUENCY OF OVERTOPPING FLOOD	= 500+ YRS.
OVERTOPPING FLOOD ELEVATION	= 117.5

GRADE DATA

GRADE POINT ELEVATION @ STA. 34+63.25 -L-	= 116.80'
BED ELEVATION @ STA. 34+63.25 -L-	= 105.10'
ROADWAY FILL SLOPES	= 3:1

TOTAL STRUCTURE QUANTITIES

CLASS A CONCRETE

BARREL @	1.011	CY/FT	56.4	C.Y.
SILLS			0.8	C.Y.
WING ETC.			23.4	C.Y.
TOTAL			80.6	C.Y.

REINFORCING STEEL

BARREL	8,977	LBS.
WINGS ETC.	1,453	LBS.
TOTAL	10,430	LBS.

FOUNDATION CONDITIONING MAT'L.	45 TONS
CULVERT EXCAVATION	LUMP SUM
REMOVAL OF EXISTING STRUCTURE	LUMP SUM

F.A. PROJECT No.: HSIP-1556(6)

NOTES

ASSUMED LIVE LOAD = HL-93 OR ALTERNATE LOADING.

DESIGN FILL = 4.76 MAX. FILL
2.65 MIN. FILL

FOR OTHER DESIGN DATA AND GENERAL NOTES, SEE SHEET SN.

3" Ø WEEP HOLES INDICATED TO BE IN ACCORDANCE WITH THE SPECIFICATIONS.

CONCRETE IN CULVERTS TO BE POURED IN THE FOLLOWING ORDER:

1. WING FOOTINGS AND FLOOR SLAB INCLUDING 4" OF ALL VERTICAL WALLS.
2. THE REMAINING PORTIONS OF THE WALLS AND WINGS FULL HEIGHT FOLLOWED BY ROOF SLAB AND HEADWALLS.

THE RESIDENT ENGINEER SHALL CHECK THE LENGTH OF CULVERT BEFORE STAKING IT OUT TO MAKE CERTAIN THAT IT WILL PROPERLY TAKE CARE OF THE FILL.

DIMENSIONS FOR WING LAYOUT AS WELL AS ADDITIONAL REINFORCING STEEL EMBEDDED IN BARREL ARE SHOWN ON WING SHEET.

AT THE CONTRACTORS OPTION, HE MAY SPLICE THE VERTICAL REINFORCING STEEL IN THE INTERIOR FACE OF EXTERIOR WALL ABOVE LOWER WALL CONSTRUCTION JOINT. THE SPLICE LENGTH SHALL BE AS PROVIDED IN THE SPLICE LENGTH CHART SHOWN ON THE PLANS. EXTRA WEIGHT OF STEEL DUE TO THE SPLICES SHALL BE PAID FOR BY THE CONTRACTOR.

AT THE CONTRACTOR'S OPTION HE MAY SUBMIT, TO THE ENGINEER FOR APPROVAL, DESIGN AND DETAIL DRAWINGS FOR A PRECAST REINFORCED CONCRETE BOX CULVERT IN LIEU OF THE CAST-IN-PLACE CULVERT SHOWN ON THE PLANS. THE DESIGN SHALL PROVIDE THE SAME SIZE AND NUMBER OF BARRELS AS USED ON THE CAST-IN-PLACE DESIGN. FOR OPTIONAL PRECAST REINFORCED CONCRETE BOX CULVERT, SEE SPECIAL PROVISIONS.

THE EXISTING STRUCTURE CONSISTING OF A 1 @ 117" X 79" CMPA, LOCATED AT THE PROPOSED STRUCTURE, SHALL BE REMOVED.

FOR SUBMITTAL OF WORKING DRAWINGS, SEE SPECIAL PROVISIONS.

FOR CRANE SAFETY, SEE SPECIAL PROVISIONS.

FOR FALSEWORK AND FORMWORK, SEE SPECIAL PROVISIONS.

FOR GROUT FOR STRUCTURES, SEE SPECIAL PROVISIONS.

FOR EROSION CONTROL MEASURES, SEE EROSION CONTROL PLANS.

THE PROFILE OF THE CULVERT BED SHALL BE ESTABLISHED SUCH THAT THE TOP OF THE BOTTOM SLAB IS 1 FOOT BELOW THE EXISTING STREAM BED.

A 3 FOOT STRIP OF FILTER FABRIC SHALL BE ATTACHED TO THE FILL FACE OF THE WING COVERING THE ENTIRE LENGTH OF THE EXPANSION JOINT.

NORTH CAROLINA PROFESSIONAL SEAL 030024 ENGINEER ASTER G. ABRAHA

DocuSigned by: Aster Abraha
DDA094AED51...
3/21/2017

DOCUMENT NOT CONSIDERED FINAL UNLESS ALL SIGNATURES COMPLETED

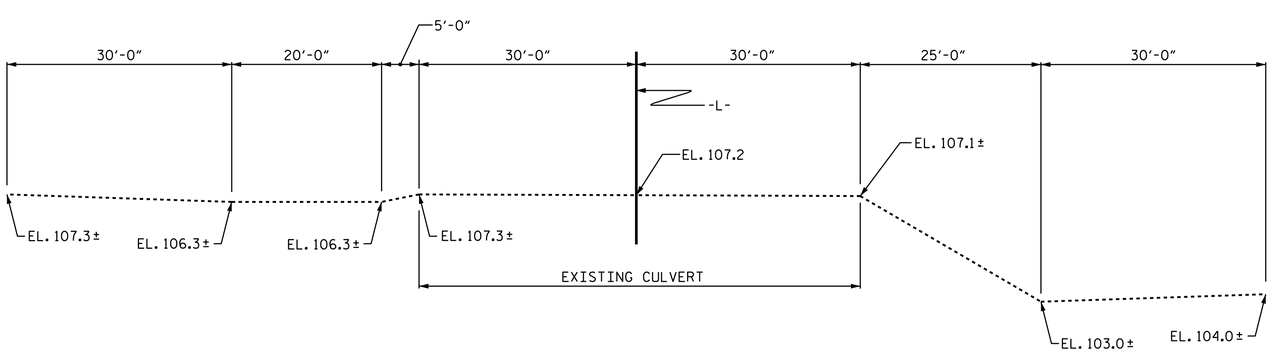

PROFILE ALONG ℄ CULVERT

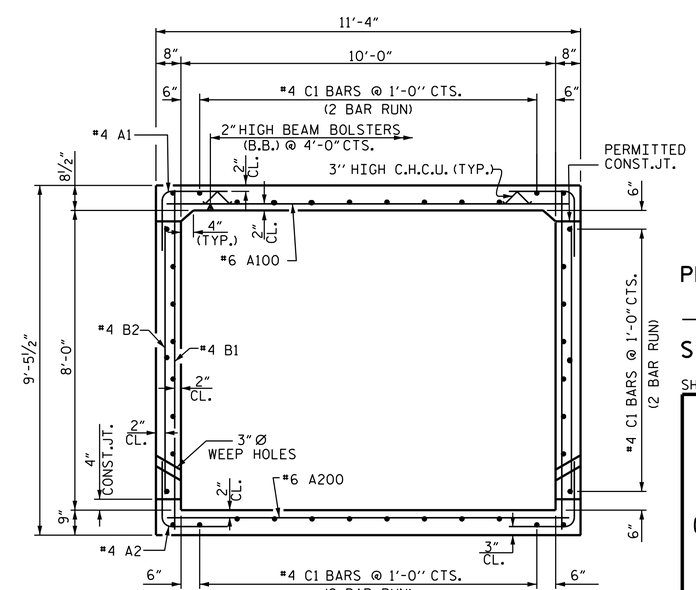

RIGHT ANGLE SECTION OF BARREL

THERE ARE 42 "C" BARS IN SECTION OF BARREL

PROJECT NO. W-5500

WAYNE COUNTY

STATION: 34+63.25 -L-

SHEET 1 OF 4

STATE OF NORTH CAROLINA
DEPARTMENT OF TRANSPORTATION
RALEIGH

SINGLE 10 FT. X 8 FT.
CONCRETE BOX CULVERT

REVISIONS						SHEET NO.
NO.	BY:	DATE:	NO.	BY:	DATE:	C-1
1			3			TOTAL SHEETS
2			4			4

DRAWN BY :	M. K. BEARD	DATE :	3/17
CHECKED BY :	S. B. WILLIAMS	DATE :	3/17
DESIGN ENGINEER OF RECORD:	K. P. SEDAI	DATE :	3/17

21-MAR-2017 14:31
O:\Division04\W5500\Structures\Plans\W-5500\Final_Plans\PDFs\W5500_SMU_CU.dgn
ksedai

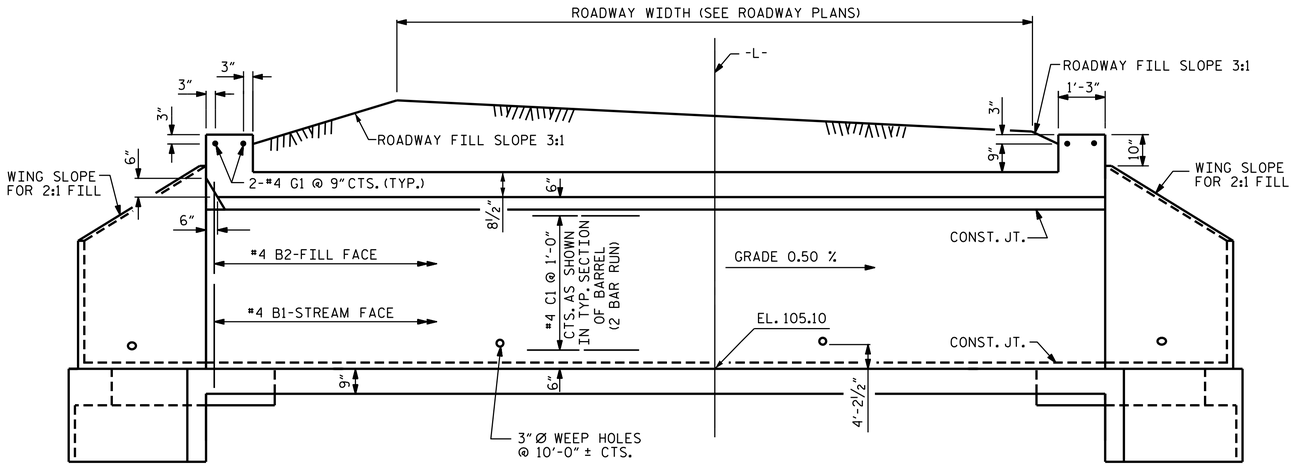

CULVERT SECTION NORMAL TO ROADWAY

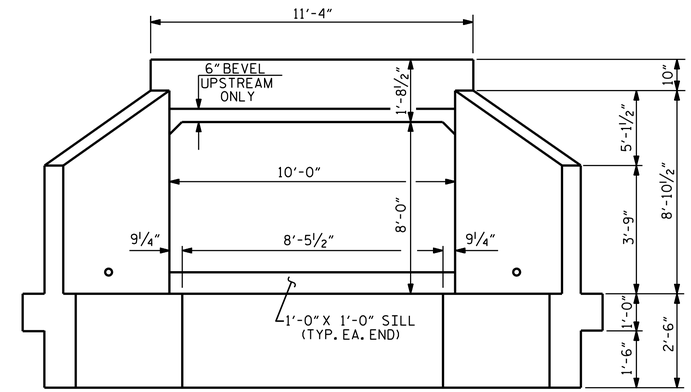

END ELEVATION

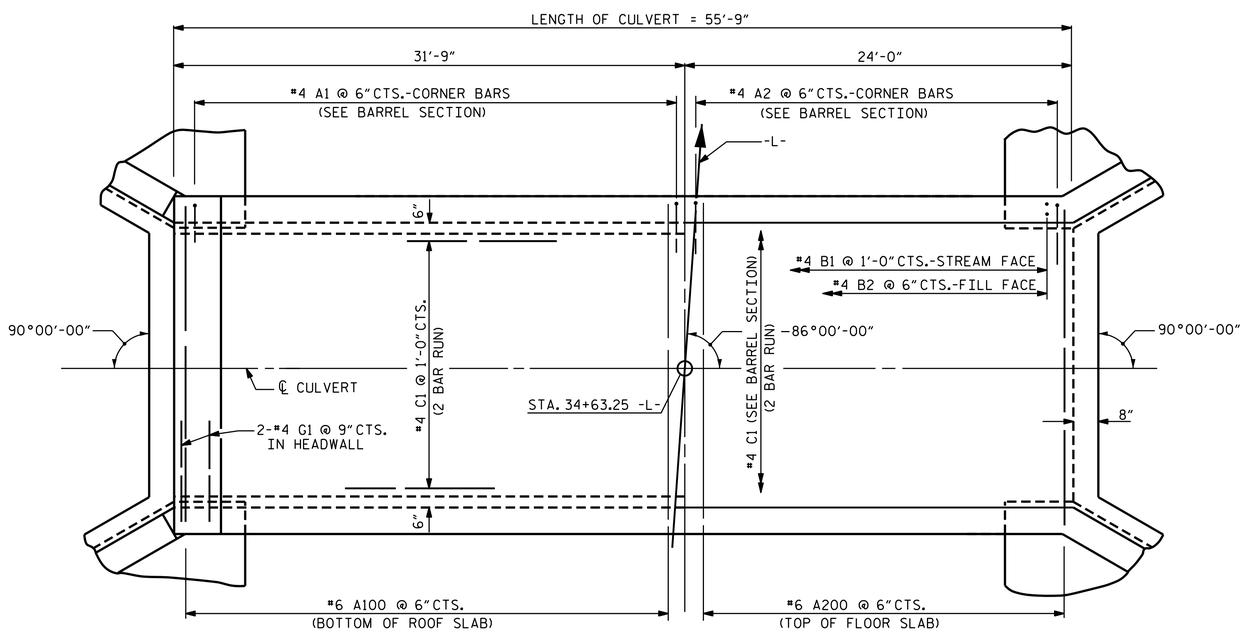

PART PLAN ROOF SLAB

PART PLAN FLOOR SLAB

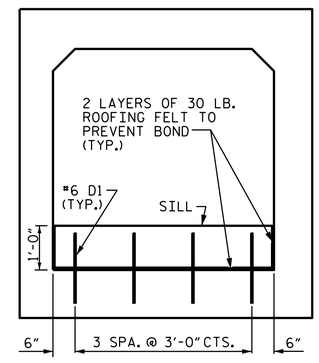

ELEVATION

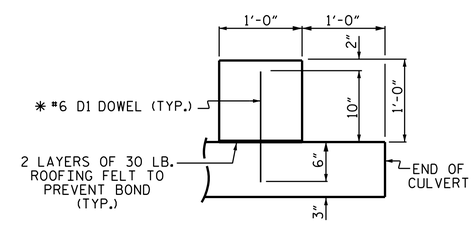

SECTION THROUGH SILL

* DOWELS MAY BE PUSHED INTO GREEN CONCRETE AFTER SLAB HAS BEEN FLOAT FINISHED.

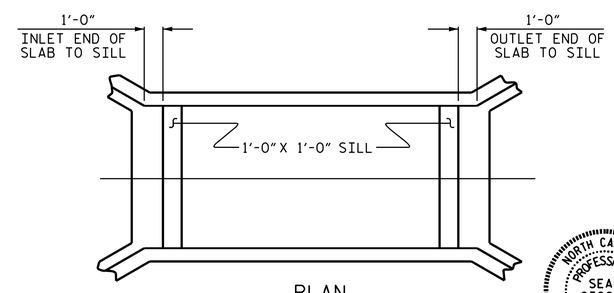

PLAN

SILL DETAILS

NORTH CAROLINA PROFESSIONAL SEAL 030024 ENGINEER ASTER G. ABRAHA

DocuSigned by: Aster Abraha 3/21/2017

PROJECT NO. W-5500

WAYNE COUNTY

STATION: 34+63.25 -L-

SHEET 2 OF 4

STATE OF NORTH CAROLINA
DEPARTMENT OF TRANSPORTATION
RALEIGH

SINGLE 10 FT. x 8 FT. CONCRETE BOX CULVERT

DRAWN BY :	M. K. BEARD	DATE :	3/17
CHECKED BY :	S. B. WILLIAMS	DATE :	3/17
DESIGN ENGINEER OF RECORD:	K. P. SEDAI	DATE :	3/17

DOCUMENT NOT CONSIDERED FINAL UNLESS ALL SIGNATURES COMPLETED

REVISIONS							
NO.	BY:	DATE:	NO.	BY:	DATE:	SHEET NO.	C-2
1			3			TOTAL SHEETS	4
2			4				

21-MAR-2017 14:31
Q:\Division04\W5500\Structures\Plans\W-5500\Final_Plans\PDFs\W5500_SMU_CU.dgn
ksedai

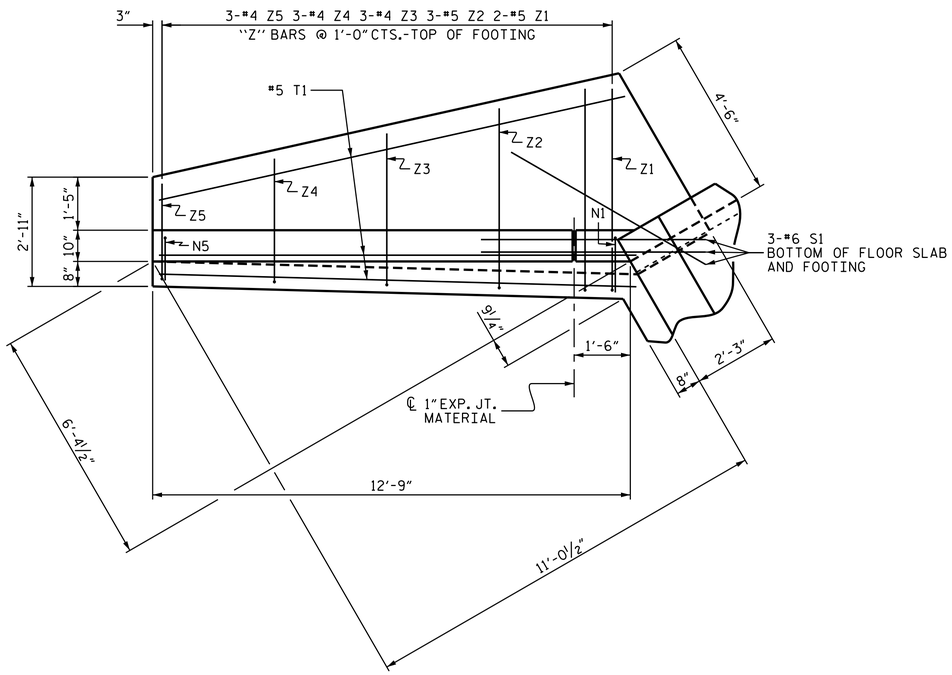

PLAN

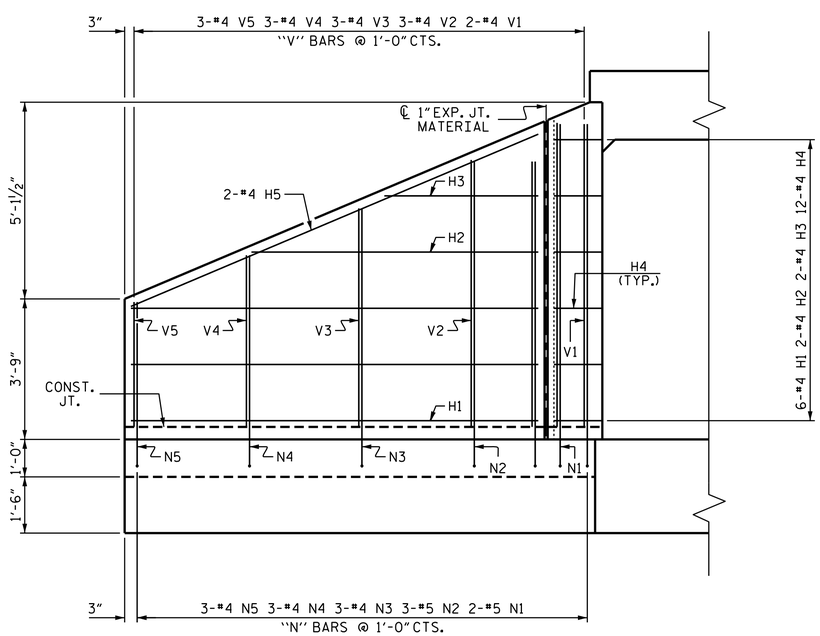

ELEVATION

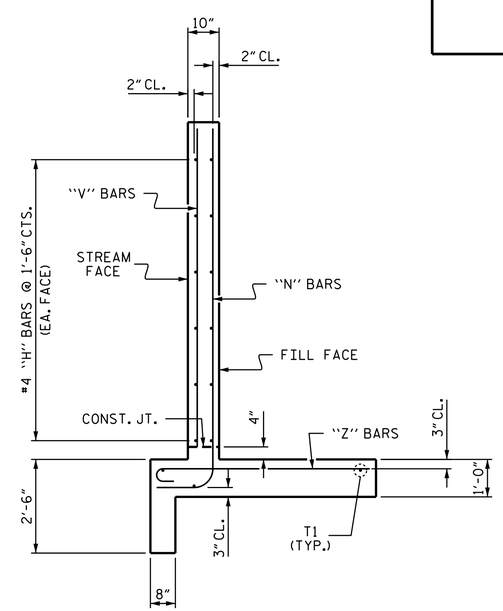

TYPICAL WING SECTION

BAR TYPES

ALL BAR DIMENSIONS ARE OUT TO OUT.

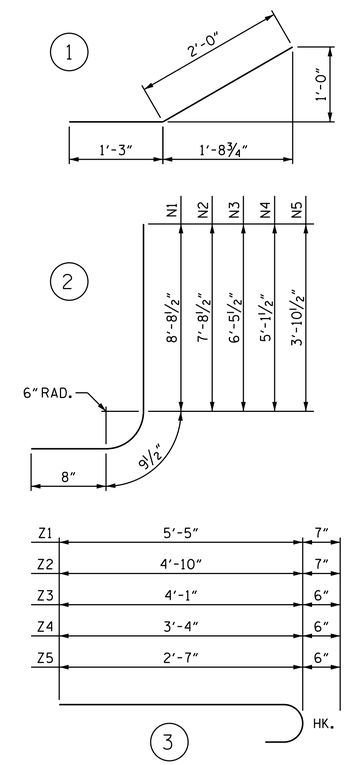

BILL OF MATERIAL

BAR	NO.	SIZE	TYPE	LENGTH	WEIGHT
H1	24	#4	STR	10'-10"	174
H2	8	#4	STR	7'-8"	41
H3	8	#4	STR	4'-1"	22
H4	48	#4	1	3'-3"	104
H5	8	#4	STR	11'-9"	63
N1	8	#5	2	10'-2"	85
N2	12	#5	2	9'-2"	115
N3	12	#4	2	7'-11"	63
N4	12	#4	2	6'-7"	53
N5	12	#4	2	5'-4"	43
S1	12	#6	STR	6'-0"	108
T1	12	#5	STR	12'-9"	160
V1	8	#4	STR	8'-1"	43
V2	12	#4	STR	7'-1"	57
V3	12	#4	STR	5'-10"	47
V4	12	#4	STR	4'-7"	37
V5	12	#4	STR	3'-4"	27
Z1	8	#5	3	6'-0"	50
Z2	12	#5	3	5'-5"	68
Z3	12	#4	3	4'-7"	37
Z4	12	#4	3	3'-10"	31
Z5	12	#4	3	3'-1"	25

REINFORCING STEEL
FOR 4 WINGS 1453 LBS

CLASS A CONCRETE
4 WINGS 21.4 CY
2 HEADWALLS 1.0 CY
2 END CURTAIN WALLS 1.0 CY
TOTAL 23.4 CY

PROJECT NO. W-5500
WAYNE COUNTY
STATION: 34+63.25 -L-

STATE OF NORTH CAROLINA
DEPARTMENT OF TRANSPORTATION
RALEIGH

STANDARD WINGS FOR CONCRETE BOX CULVERT

H = 8'-0" SLOPE = 2:1
90° SKEW

NORTH CAROLINA PROFESSIONAL SEAL 030024 ENGINEER ASTER G. ABRAHA

DocuSigned by: Aster Abraha
DDA004AED91...
3/21/2017

REVISIONS						SHEET NO.
NO.	BY:	DATE:	NO.	BY:	DATE:	C-3
1			3			TOTAL SHEETS
2			4			4

ASSEMBLED BY : K. P. SEDAI DATE : 3/17
CHECKED BY : A. G. ABRAHA DATE : 3/17
DRAWN BY : CCJ 10/99
CHECKED BY : RWW 03/00

STD. NO. CW9008

LOAD AND RESISTANCE FACTOR RATING (LRFR) SUMMARY FOR REINFORCED CONCRETE BOX CULVERT

LEVEL		VEHICLE	WEIGHT (W) (TONS)	CONTROLLING LOAD RATING (#)	MINIMUM RATING FACTORS (RF)	TONS = W x RF	STRENGTH I LIMIT STATE									COMMENT NUMBER
							LIVE-LOAD FACTORS (γ_{LL})	MOMENT				SHEAR				
								RATING FACTOR	BOX NO.	ELEMENT TYPE	DISTANCE FROM LEFT END OF ELEMENT (ft)	RATING FACTOR	BOX NO.	ELEMENT TYPE	DISTANCE FROM LEFT END OF ELEMENT (ft)	
DESIGN LOAD RATING		HL-93 (INVENTORY)	N/A	1	1.01	--	1.75	1.09	1	Top Slab	5.07	1.01	1	Top Slab	0.84	
		HL-93 (OPERATING)	N/A		1.31	--	1.35	1.41	1	Top Slab	5.07	1.31	1	Top Slab	0.84	
		HS-20 (INVENTORY)	36.000	2	1.17	42.24	1.75	1.17	1	Top Slab	5.33	1.18	1	Top Slab	0.84	
		HS-20 (OPERATING)	36.000		1.52	54.76	1.35	1.52	1	Top Slab	5.33	1.53	1	Top Slab	0.84	
LEGAL LOAD RATING	SINGLE VEHICLE (SV)	SNSH	13.500		2.13	28.76	1.40	2.13	1	Top Slab	5.33	2.15	1	Top Slab	0.84	
		SNGARBS2	20.000		1.99	39.86	1.40	1.99	1	Top Slab	5.33	2.01	1	Top Slab	0.84	
		SNAGRIS2	22.000		2.13	46.88	1.40	2.13	1	Top Slab	5.33	2.15	1	Top Slab	0.84	
		SNCOTTS3	27.250	3	1.26	34.31	1.40	1.36	1	Top Slab	5.07	1.26	1	Top Slab	0.84	
		SNAGGRS4	34.925		1.37	47.94	1.40	1.55	1	Bot Corner Wall	8.51	1.37	1	Bottom Slab	9.79	
		SNS5A	35.550		1.43	50.97	1.40	1.57	1	Top Slab	5.33	1.43	1	Bottom Slab	9.79	
		SNS6A	39.950		1.43	57.11	1.40	1.57	1	Top Slab	5.33	1.43	1	Bottom Slab	9.79	
		SNS7B	42.000		1.43	60.04	1.40	1.57	1	Top Slab	5.33	1.43	1	Bottom Slab	9.79	
	TRUCK TRACTOR SEMI-TRAILER (TTST)	TNAGRIT3	33.000		1.95	64.38	1.40	1.95	1	Bot Corner Wall	8.51	2.07	1	Bottom Slab	0.87	
		TNT4A	33.075		1.50	49.64	1.40	1.62	1	Top Slab	5.07	1.50	1	Top Slab	0.84	
		TNT6A	41.600		1.39	57.92	1.40	1.55	1	Top Slab	5.33	1.39	1	Bottom Slab	9.79	
		TNT7A	42.000		1.49	62.73	1.40	1.60	1	Top Slab	5.33	1.49	1	Top Slab	9.82	
		TNT7B	42.000		1.43	60.22	1.40	1.57	1	Top Slab	5.33	1.43	1	Bottom Slab	9.79	
		TNAGRIT4	43.000		1.43	61.62	1.40	1.54	1	Top Slab	5.07	1.43	1	Top Slab	0.84	
		TNAGT5A	45.000		1.46	65.74	1.40	1.57	1	Top Slab	5.60	1.46	1	Top Slab	9.82	
		TNAGT5B	45.000		1.50	67.54	1.40	1.62	1	Top Slab	5.60	1.50	1	Top Slab	0.84	

LOAD FACTORS:

DESIGN LOAD RATING FACTORS

LOAD TYPE	MAX FACTOR	MIN FACTOR
DC	1.25	0.90
DW	1.50	0.65
EV	1.30	0.90
EH	1.35	0.90
ES	1.35	0.90
LS	1.75	--
WA	1.00	--

NOTE:

RATING FACTORS ARE BASED ON THE STRENGTH I LIMIT STATE.

(#) CONTROLLING LOAD RATING

(1) DESIGN LOAD RATING (HL-93)

(2) DESIGN LOAD RATING (HS-20)

(3) LEGAL LOAD RATING **

** SEE CHART FOR VEHICLE TYPE

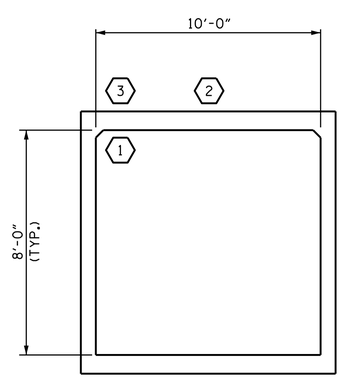

LRFR SUMMARY

(LOOKING DOWNSTREAM)

PROJECT NO. W-5500

WAYNE COUNTY

STATION: 34+63.25 -L-

SHEET 4 OF 4

NORTH CAROLINA PROFESSIONAL SEAL 030024 ENGINEER WALTER G. ABRAHA

DocuSigned by: Walter Abraha DDA094AED5104...

3/21/2017

STATE OF NORTH CAROLINA
DEPARTMENT OF TRANSPORTATION
RALEIGH

STANDARD
LRFR SUMMARY FOR REINFORCED CONCRETE BOX CULVERT
(NON-INTERSTATE TRAFFIC)

REVISIONS						SHEET NO.
NO.	BY:	DATE:	NO.	BY:	DATE:	C-4
1			3			TOTAL SHEETS
2			4			4

DOCUMENT NOT CONSIDERED FINAL UNLESS ALL SIGNATURES COMPLETED

DRAWN BY :	M.K. BEARD	DATE :	1/17
CHECKED BY :	S.B. WILLIAMS	DATE :	1/17
DESIGN ENGINEER OF RECORD:	K.P. SEDAI	DATE :	1/17

21-MAR-2017 14:31
Q:\Division04\W5500\Structures\Plans\W-5500\Final_Plans\PDFs\W5500_SMU_CU.dgn
ksedai

STD. NO. LRFR5