DocuSign Envelope ID: AC01E457-35E2-496D-9290-6FF203F01932

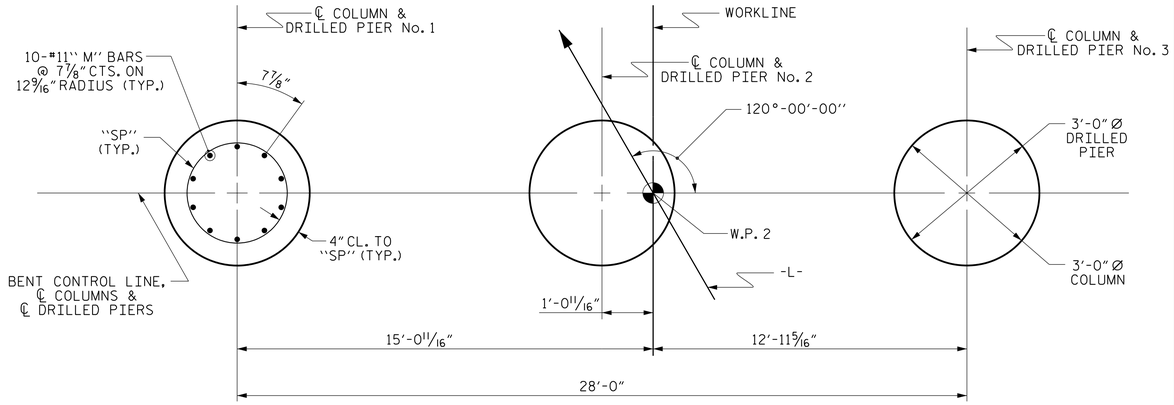

PLAN OF DRILLED PIERS & COLUMNS

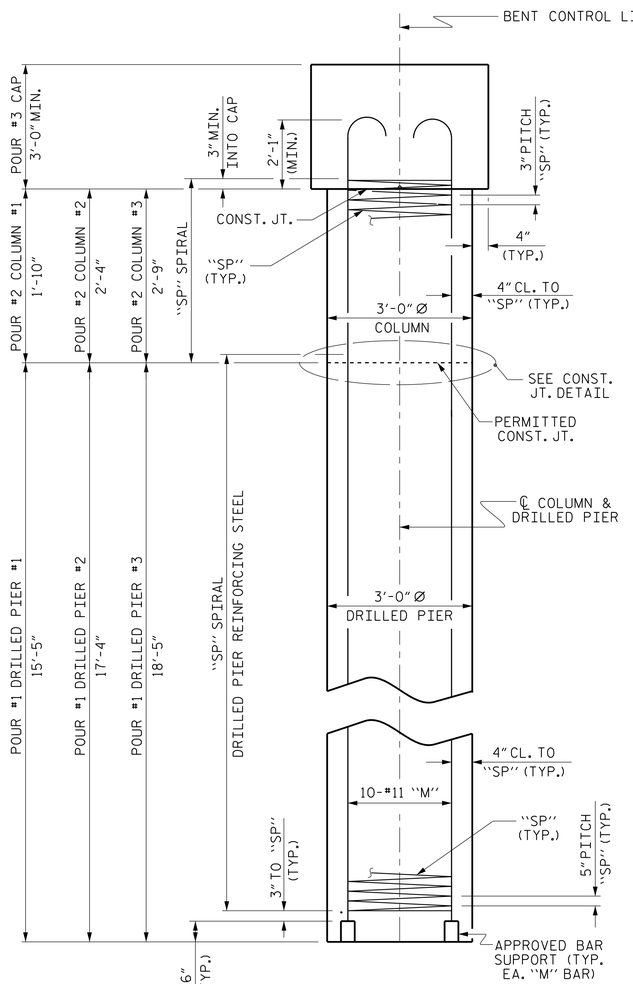

END ELEVATION

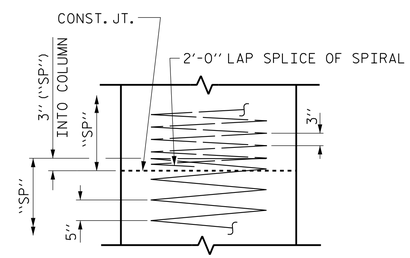

PERMITTED CONSTRUCTION JOINT DETAIL

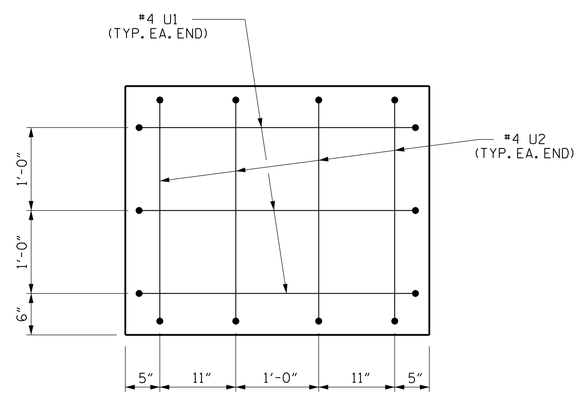

END OF CAP VIEW

(TYPICAL BOTH ENDS)

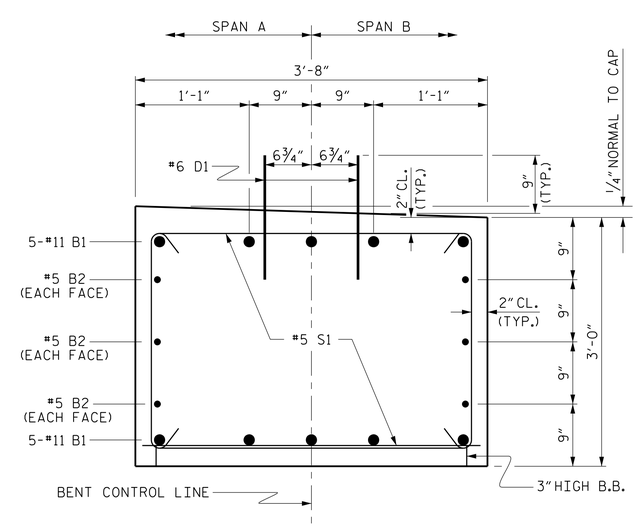

SECTION THRU CAP

BAR TYPES

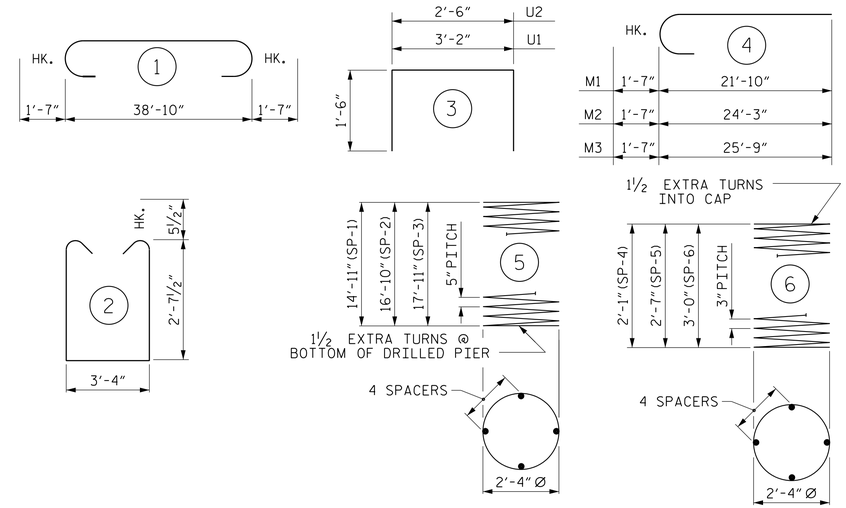

ALL BAR DIMENSIONS ARE OUT TO OUT

BILL OF MATERIAL
FOR ONE BENT

BAR	NO.	SIZE	TYPE	LENGTH	WEIGHT
B1	10	#11	1	42'-0"	2231
B2	6	#5	STR	39'-0"	244
D1	40	#6	STR	1'-6"	90
M1	10	#11	4	23'-5"	1244
M2	10	#11	4	25'-10"	1373
M3	10	#11	4	27'-4"	1452
S1	64	#5	2	9'-6"	634
U1	6	#4	3	6'-2"	25
U2	8	#4	3	5'-6"	29

REINFORCING STEEL (FOR ONE BENT) 7322 LBS.

SP-1	1	*	5	272'-10"	285
SP-2	1	*	5	301'-7"	315
SP-3	1	*	5	323'-1"	337
SP-4	1	**	6	72'-1"	48
SP-5	1	**	6	86'-6"	58
SP-6	1	**	6	100'-11"	67

SPIRAL COLUMN REINFORCING STEEL (FOR ONE BENT) 1110 LBS.

* THE SP-1, SP-2 & SP-3 SPIRAL REINFORCING STEEL SHALL BE W31 OR D-31 COLD DRAWN WIRE OR #5 PLAIN OR DEFORMED BAR

** THE SP-4, SP-5 & SP-6 SPIRAL REINFORCING STEEL SHALL BE W20 OR D-20 COLD DRAWN WIRE OR #4 PLAIN OR DEFORMED BAR

CLASS A CONCRETE BREAKDOWN (FOR ONE BENT)

POUR #2 (COLUMNS)	1.8 C.Y.
POUR #3 (CAP)	16.1 C.Y.
TOTAL CLASS A CONCRETE	17.9 C.Y.

DRILLED PIERS: (FOR ONE BENT)

DRILLED PIER CONCRETE POUR #1 (DRILLED PIERS)	13.4 C.Y.
3'-0" Ø DRILLED PIER NOT IN SOIL	21 LIN. FT.
3'-0" Ø DRILLED PIER IN SOIL	30.2 LIN. FT.
PERMANENT STEEL CASING FOR 3'-0" Ø DRILLED PIER	37.0 LIN. FT.
CSL TUBES	222.7 LIN. FT.
SID INSPECTIONS	1 EACH
CSL TESTING	1 EACH

PROJECT NO. 17BP.4.R.67
HALIFAX COUNTY
STATION: 13+40.00 -L-

SHEET 2 OF 2

STATE OF NORTH CAROLINA
DEPARTMENT OF TRANSPORTATION
RALEIGH

SUBSTRUCTURE
BENT No. 1

PLANS PREPARED BY:
CALYX ENGINEERS + CONSULTANTS
6750 TRYON ROAD
CARY, NC 27518
phone: 919.851.1912
CALYXengineers.com
NC License # F-1333

DOCUMENT NOT CONSIDERED FINAL UNLESS ALL SIGNATURES COMPLETED

THIS STANDARD DRAWING REVIEWED & ADOPTED FOR USE AT THE REFERENCED LOCATION BY THE UNDERSIGNED:

NORTH CAROLINA PROFESSIONAL SEAL 19861 ENGINEER L. KEVIN AUSTIN
DocuSigned by: L. Kevin Austin 52F7B37D5CA4EB...
11/1/2016

REVISIONS						
NO.	BY:	DATE:	NO.	BY:	DATE:	
1			3			
2			4			

SHEET NO. S-15
TOTAL SHEETS 18

ASSEMBLED BY : W. B. ALLEN DATE : 10/16
CHECKED BY : Z. H. BROWN DATE : 10/16
DRAWN BY : DGE 03/10
CHECKED BY : MKT 03/10

10/26/2016 1:17:28 PM R:\Structures\17BP.4.R.67_SMU_BL_02.dgn

STD. NO. DP_BT_30_120S_<50'