DocuSign Envelope ID: AC01E457-35E2-496D-9290-6FF203F01932

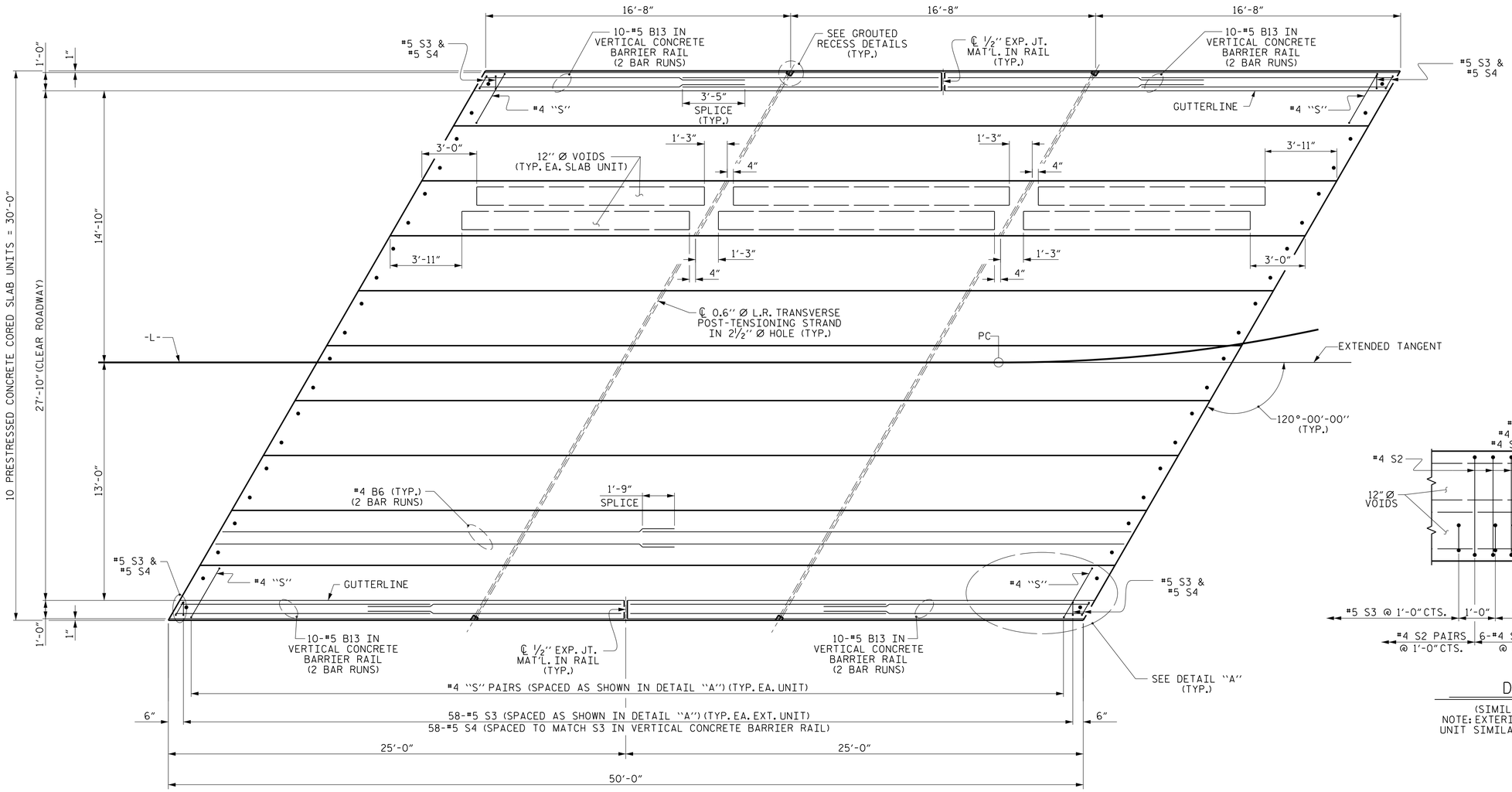

PLAN OF UNIT

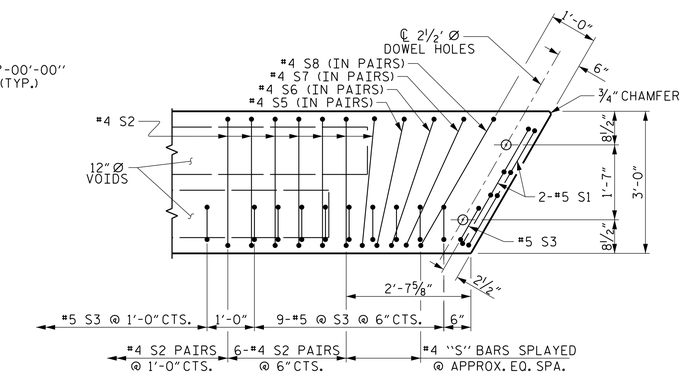

DETAIL "A"

(SIMILAR EACH END OF UNIT)
NOTE: EXTERIOR UNIT SHOWN - INTERIOR UNIT SIMILAR EXCEPT OMIT #5 S3 BARS.

PROJECT NO. 17BP.4.R.67

HALIFAX COUNTY

STATION: 13+40.00 -L-

SHEET 3 OF 4

STATE OF NORTH CAROLINA
DEPARTMENT OF TRANSPORTATION
RALEIGH

PLAN OF 50' UNIT 27'-10" CLEAR ROADWAY 120° SKEW

DOCUMENT NOT CONSIDERED FINAL UNLESS ALL SIGNATURES COMPLETED

THIS STANDARD DRAWING REVIEWED & ADOPTED FOR USE AT THE REFERENCED LOCATION BY THE UNDERSIGNED:

NORTH CAROLINA PROFESSIONAL SEAL 19861 ENGINEER K. KEVIN AUSTIN

DocuSigned by: K. Kevin Austin 5F7B372DEAA68...

11/1/2016

PLANS PREPARED BY:

CALYX ENGINEERS + CONSULTANTS
6750 TRYON ROAD
CARY, NC 27518
phone: 919.851.1912
CALYXengineers.com
NC License # F-1333

REVISIONS						
NO.	BY:	DATE:	NO.	BY:	DATE:	
1			3			
2			4			

SHEET NO. S-7
TOTAL SHEETS 18

ASSEMBLED BY :	W. B. ALLEN	DATE :	7/16
CHECKED BY :	W. A. DAVIS	DATE :	9/16
DRAWN BY : DGE	3/09	REV. 12/5/11	MAA/AAC
CHECKED BY : BCH	3/09	REV. 8/14	MAA/TMG

10/26/2016 1:17:08 PM R:\Structures\17BP.4.R.67_SMU_CS_03.dgn

STD. NO. 21" PCS_30_120S_50L