DocuSign Envelope ID: 4F931F9E-98FD-4A25-AA64-229EA0D7D580

CALYX ENGINEERS + CONSULTANTS
6750 TRYON ROAD
CARY, NC 27518
phone: 919.851.1912
CALYXengineers.com
NC License # F-1333

PROJECT REFERENCE NO.	SHEET NO.
17BP.4.R.67	2A-1
ROADWAY DESIGN ENGINEER	PAVEMENT DESIGN ENGINEER

DocuSigned by: Stephen C. Browde
0E27931F3EA42B...
11/4/2016

PAVEMENT SCHEDULE

C1	PROP. APPROX. 1 1/2" ASPHALT CONCRETE SURFACE COURSE TYPE SF9.5A, AT AN AVERAGE RATE OF 165 LBS. PER SQ. YD.
C2	PROP. APPROX. 3" ASPHALT CONCRETE SURFACE COURSE TYPE SF9.5A, AT AN AVERAGE RATE OF 165 LBS. PER SQ. YD. IN EACH OF TWO LAYERS.
C3	PROP. VAR. DEPTH ASPHALT CONCRETE SURFACE COURSE TYPE SF9.5A, AT AN AVERAGE RATE OF 110 LBS. PER SQ. YD. PER 1" DEPTH. TO BE PLACED IN LAYERS NOT TO EXCEED 1.5" IN DEPTH.
E1	PROP. APPROX. 6" ASPHALT CONCRETE BASE COURSE, TYPE B25.0B, AT AN AVERAGE RATE OF 342 LBS. PER SQ. YD. IN EACH OF TWO LAYERS.
E2	PROP. VAR. DEPTH ASPHALT CONCRETE BASE COURSE, TYPE B25.0B, AT AN AVERAGE RATE OF 114 LBS. PER SQ. YD. PER 1" DEPTH. TO BE PLACE IN LAYERS NOT LESS THAN 3" IN DEPTH OR GREATER THAN 5½" IN DEPTH.
R	PROP. SHOULDER BERM GUTTER
T	EARTH MATERIAL.
U	EXISTING PAVEMENT.
W	VARIABLE DEPTH ASPHALT PAVEMENT (SEE WEDGING DETAIL)

NOTE: PAVEMENT EDGE SLOPES ARE 1:1 UNLESS SHOWN OTHERWISE.

**NOTE 1: USE INSET "A" FOR LEFT SIDE GUARDRAIL LOCATIONS WITHOUT SHOULDER BERM GUTTER

**NOTE 2: USE INSET "B" FOR LEFT SIDE GUARDRAIL LOCATIONS WITH SHOULDER BERM GUTTER

**NOTE 3: USE INSET "C" FOR RIGHT SIDE GUARDRAIL LOCATIONS WITHOUT SHOULDER BERM GUTTER

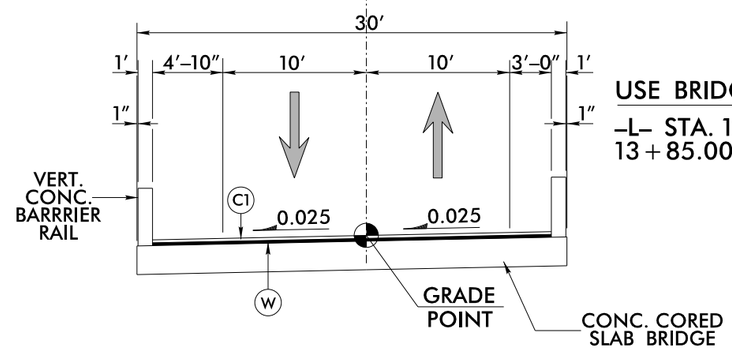

BRIDGE SKETCH NO. 1
BRIDGE #198

USE BRIDGE SKETCH NO. 1 AS FOLLOWS:
–L– STA. 12+95.00 (BEGIN BRIDGE) TO 13+85.00 (END BRIDGE)

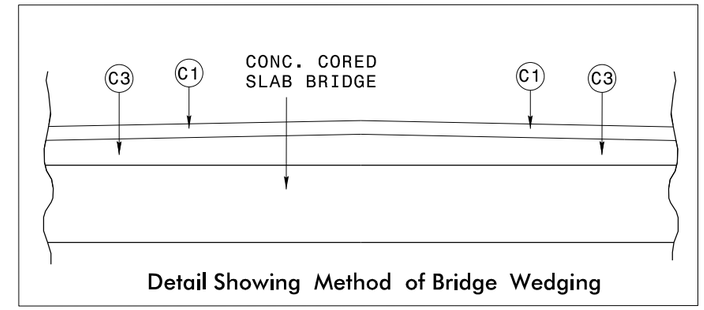

Detail Showing Method of Bridge Wedging

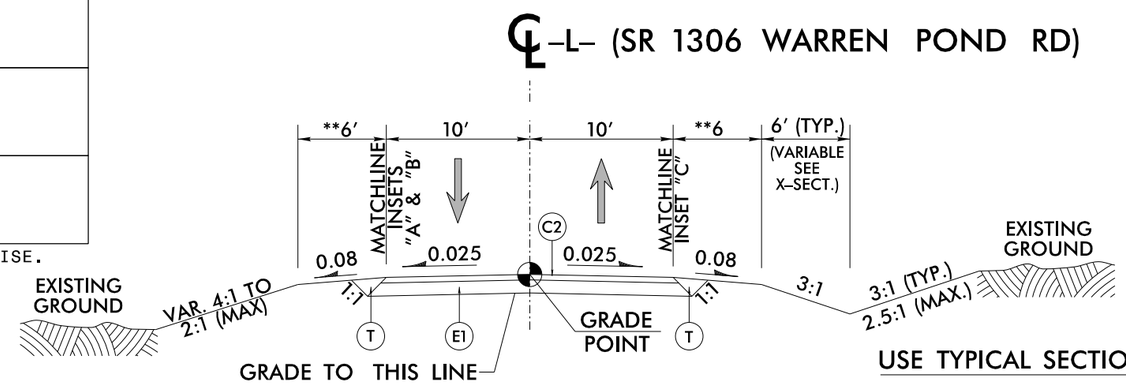

TYPICAL SECTION NO. 1

USE TYPICAL SECTION NO. 1 AS FOLLOWS:
–L– STA. 10+05.00 TO 12+94.93 (BEGIN BRIDGE)
–L– STA. 13+85.15 (END BRIDGE) TO 17+80.00

INSET "A"

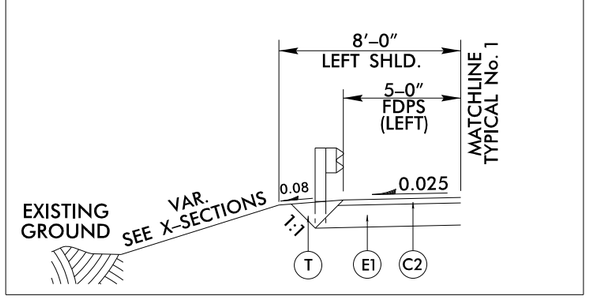

INSET "B"

SHOULDER BERM LOCATIONS:
–L– STA. 14+04 TO 14+52 (LT.)

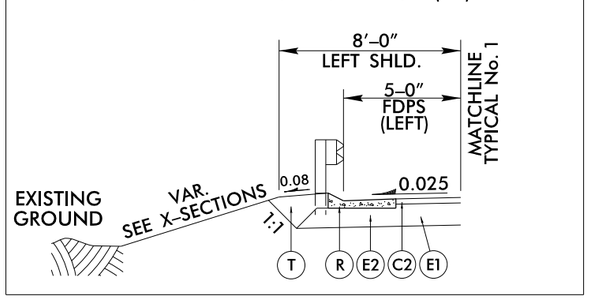

INSET "C"

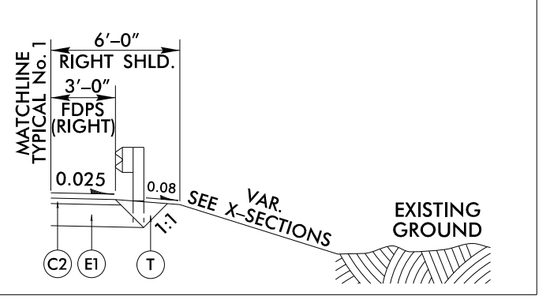

11/4/2016
R:\Roadway\Proj\Halifax 198_RDY_TYP.dgn
dlee