This electronic collection of documents is provided for the convenience of the user and is Not a Certified Document –

The documents contained herein were originally issued and sealed by the individuals whose names and license numbers appear on each page, on the dates appearing with their signature on that page.
This file or an individual page shall not be considered a certified document.

REVISED PLAN SET - MARCH 2, 2022

DocuSign Envelope ID: B47CAD2D-9406-463F-AC11-2251AA98B10E

09/08/99

TIP PROJECT: 80074

CONTRACT: DD00366

See Sheet 1A For Index of Sheets
See Sheet 1B For Conventional Symbols
See Sheet 1C-1 Thru 1C-3 For Survey Control Sheets

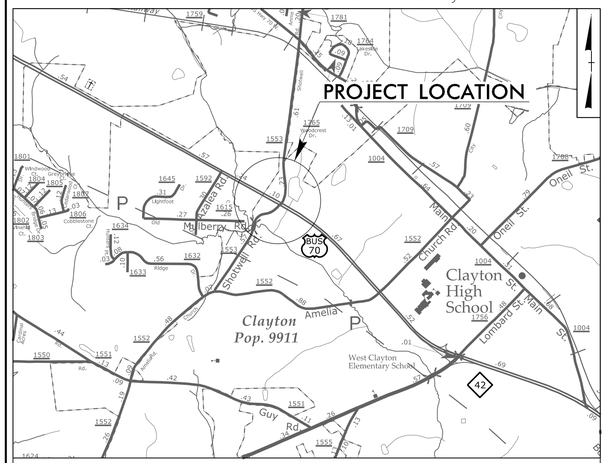

VICINITY MAP

STATE OF NORTH CAROLINA
DIVISION OF HIGHWAYS

JOHNSTON COUNTY

LOCATION: US–70 BUSINESS AT SR 1553 (SHOTWELL ROAD)

TYPE OF WORK: GRADING, DRAINAGE, PAVING AND SIGNAL,

STATE	STATE PROJECT REFERENCE NO.	SHEET NO.	TOTAL SHEETS
N.C.	80074	1	

STATE PROJ. NO.	F.A. PROJ. NO.	DESCRIPTION
80074		Y1, Y1A (CONST.)

UPDATED SIGNAL

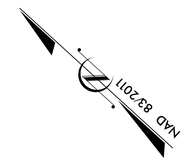

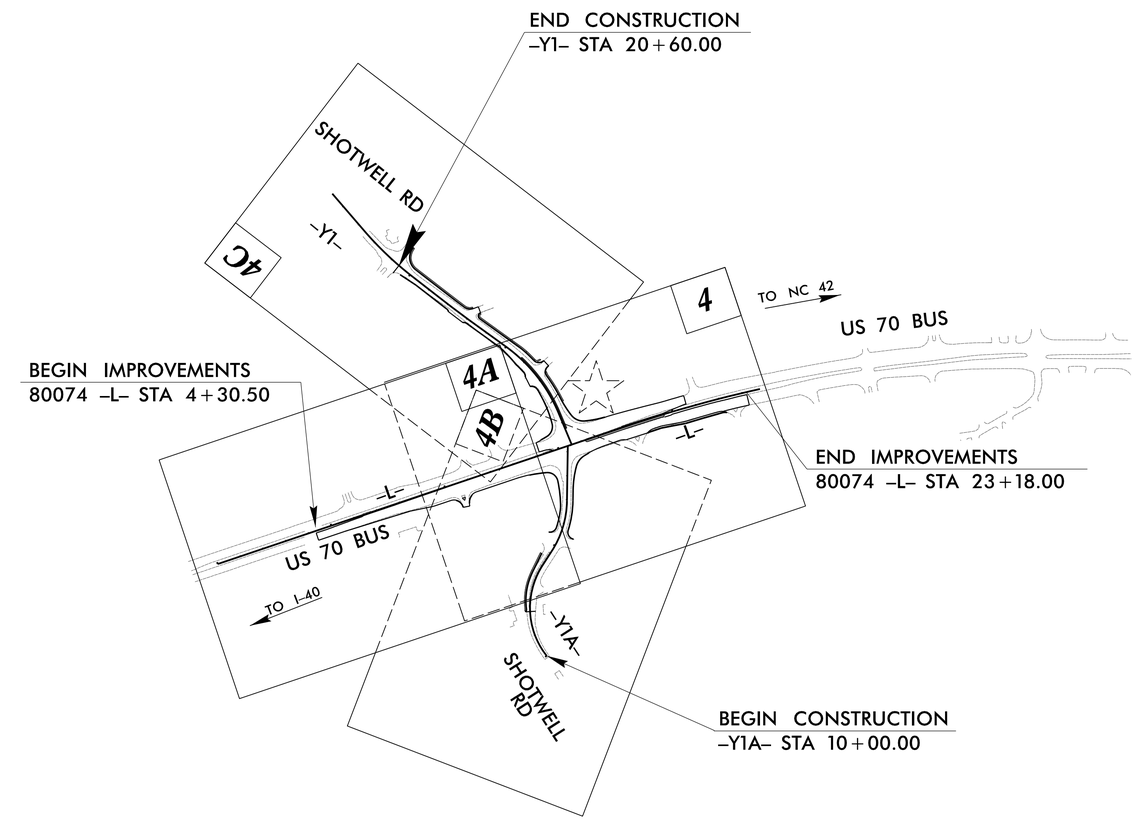

DOCUMENT NOT CONSIDERED FINAL UNLESS ALL SIGNATURES COMPLETED

GRAPHIC SCALES

50 25 0 50 100
PLANS

50 25 0 50 100
PROFILE (HORIZONTAL)

10 5 0 10 20
PROFILE (VERTICAL)

DESIGN DATA

ADT 2015 = 36000

K = %
D = %
T = % *
V = 50 MPH
* TTST= DUAL=
FUNC CLASS =
OTHER PRINCIPAL ARTERIAL

PROJECT LENGTH

LENGTH ROADWAY TIP PROJECT 80074 = 0.357 MILES

TOTAL LENGTH TIP PROJECT 80074 = 0.357 MILES

Prepared in the Office of:
SEPI Engineering & Construction, Inc.
1 Glenwood Avenue
Raleigh, NC 27603
Tel:919.789.9977
Fax:919.789.9591
License: C-2197

2018 STANDARD SPECIFICATIONS

RIGHT OF WAY DATE:

LETTING DATE:
NOVEMBER 23, 2021

BENJAMIN CRAWFORD. PE
PROJECT ENGINEER

WILLIAM POPE, PE
PROJECT DESIGN ENGINEER

ADDISON GAINEY, PE
NCDOT CONTACT

HYDRAULICS ENGINEER
DocuSigned by: Andrew M. Howell
10/8/2021 P.E.
SIGNATURE:

ROADWAY DESIGN ENGINEER
DocuSigned by: Benjamin R. Crawford
10/8/2021 P.E.
SIGNATURE:

STATE OF NORTH CAROLINA DEPARTMENT OF TRANSPORTATION

10/8/2021
...\80074_Rdy_tsh.dgn
USER:default

DocuSign Envelope ID: 9060AE98-AADD-43BA-940A-509B4B21733B

8/17/99

STATE OF NORTH CAROLINA
DIVISION OF HIGHWAYS

SEPI Engineering & Construction, Inc.
1 Glenwood Avenue
Raleigh, NC 27603
Tel:919.789.9977
Fax:919.789.9591
License: C-2197

PROJECT REFERENCE NO.	SHEET NO.
80074	1A

ROADWAY DESIGN ENGINEER

NORTH CAROLINA PROFESSIONAL SEAL 32606 ENGINEER
Benjamin Rutledge Crawford
41DA29B3E39E4B4...
10/22/2021

DOCUMENT NOT CONSIDERED FINAL UNLESS ALL SIGNATURES COMPLETED

INDEX OF SHEETS

SHEET NUMBER	SHEET
1	TITLE SHEET
1A	INDEX OF SHEETS, GENERAL NOTES, AND STANDARD DRAWINGS
1B	CONVENTIONAL PLAN SHEET SYMBOLS
1C-1 THRU 1C-3	SURVEY CONTROL SHEETS
2A-1 THRU 2A-3	PAVEMENT SCHEDULE, WEDGING DETAILS, AND TYPICAL SECTIONS
2C-1	GUARDRAIL PLACEMENT DETAIL
2C-2	MINIMUM DEPTH CONCRETE CATCH BASIN DETAIL
3B-1	SUMMARY OF EARTHWORK AND GUARDRAIL SUMMARY
3D-1 THRU 3D-2	DRAINAGE SUMMARIES
4 THRU 4C	PLAN SHEETS
5 THRU 7	PROFILE SHEETS
TMP-1 THRU TMP-3	TRAFFIC MANAGEMENT PLANS
PMP-1 THRU PMP-3A	PAVEMENT MARKING PLANS
EC-1 THRU EC-11	EROSION CONTROL PLANS
SIGN-1 THRU SIGN-3A	SIGNING PLANS
SIG-1 THRU SIG-M8	SIGNAL PLANS
SCP-1 THRU SCP-3	COMMUNICATIONS CABLE AND CONDUIT ROUTING PLANS UTILITIES
UC-1 THRU UC-6	CONSTRUCTION PLANS
UD-1 THRU UD-5	UTILITIES BY OTHERS PLANS
X-1A	CROSS SECTION INDEX SHEET
X-1B	CROSS SECTION SUMMARY
X-2 THRU X-23	CROSS SECTIONS

GENERAL NOTES: 2018 SPECIFICATIONS
EFFECTIVE: 01-16-2018
REVISED:

GRADING AND SURFACING OR RESURFACING AND WIDENING:

THE GRADE LINES SHOWN DENOTE THE FINISHED ELEVATION OF THE PROPOSED SURFACING AT GRADE POINTS SHOWN ON THE TYPICAL SECTIONS. WHERE NO GRADE LINES ARE SHOWN, THE PROFILES SHOWN DENOTE THE TOP ELEVATION OF THE EXISTING PAVEMENT ALONG THE CENTER LINE OF SURVEY ON WHICH THE PROPOSED RESURFACING WILL BE PLACED. GRADE LINES MAY BE ADJUSTED BY THE ENGINEER IN ORDER TO SECURE A PROPER TIE-IN.

CLEARING:

CLEARING ON THIS PROJECT SHALL BE PERFORMED TO THE LIMITS ESTABLISHED BY METHOD II.

SUPERELEVATION:

ALL CURVES ON THIS PROJECT SHALL BE SUPERELEVATED IN ACCORDANCE WITH STD. NO. 225.04 USING THE RATE OF SUPERELEVATION AND RUNOFF SHOWN ON THE PLANS. SUPERELEVATION IS TO BE REVOLVED ABOUT THE GRADE POINTS SHOWN ON THE TYPICAL SECTIONS.

SHOULDER CONSTRUCTION:

ASPHALT, EARTH, AND CONCRETE SHOULDER CONSTRUCTION ON THE HIGH SIDE OF SUPERELEVATED CURVES SHALL BE IN ACCORDANCE WITH STD. NO. 560.01

SIDE ROADS:

THE CONTRACTOR WILL BE REQUIRED TO DO ALL NECESSARY WORK TO PROVIDE SUITABLE CONNECTIONS WITH ALL ROADS, STREETS, AND DRIVES ENTERING THIS PROJECT. THIS WORK WILL BE PAID FOR AT THE CONTRACT UNIT PRICE FOR THE PARTICULAR ITEMS INVOLVED.

STREET TURNOUT:

STREET RETURNS SHALL BE CONSTRUCTED IN ACCORDANCE WITH STD. NO. 848.04 USING THE RADII NOTED ON PLANS.

GUARDRAIL:

THE GUARDRAIL LOCATIONS SHOWN ON THE PLANS MAY BE ADJUSTED DURING CONSTRUCTION AS DIRECTED BY THE ENGINEER. THE CONTRACTOR SHOULD CONSULT WITH THE ENGINEER PRIOR TO ORDERING GUARDRAIL MATERIAL.

TEMPORARY SHORING:

SHORING REQUIRED FOR THE MAINTENANCE OF TRAFFIC WILL BE PAID FOR AS "EXTRA WORK" IN ACCORDANCE WITH SECTION 104-7.

UTILITIES:

UTILITY OWNERS ON THIS PROJECT ARE:
TOWN OF CLAYTON
DUKE ENERGY
PIEDMONT NATURAL GAS
CENTURY LINK
CHARTER
VERIZON

ANY RELOCATION OF EXISTING UTILITIES WILL BE ACCOMPLISHED BY OTHERS, EXCEPT AS SHOWN ON THE PLANS.

CURB RAMPS

CURB RAMPS ARE SHOWN ON THE PLANS AT APPROXIMATE LOCATIONS.
CONSTRUCT ALL CURB RAMPS ACCORDANCE WITH STD 848.05 and/or 848.06.

EFF. 01-16-2018
REV.

2018 ROADWAY ENGLISH STANDARD DRAWINGS

The following Roadway Standards as appear in "Roadway Standard Drawings" Highway Design Branch - N. C. Department of Transportation - Raleigh, N. C., Dated January, 2018 are applicable to this project and by reference hereby are considered a part of these plans:

STD.NO.	TITLE
DIVISION 2 - EARTHWORK	
200.02	Method of Clearing - Method II
225.02	Guide for Grading Subgrade - Secondary and Local
225.04	Method of Obtaining Superelevation - Two Lane Pavement
225.06	Method of Grading Sight Distance at Intersections
DIVISION 3 - PIPE CULVERTS	
300.01	Method of Pipe Installation
DIVISION 4 - MAJOR STRUCTURES	
422.01	Bridge Approach Fills - Type I Standard Approach Fill
DIVISION 5 - SUBGRADE, BASES AND SHOULDERS	
560.01	Method of Shoulder Construction - High Side of Superelevated Curve - Method I
DIVISION 6 - ASPHALT BASES AND PAVEMENTS	
654.01	Pavement Repairs
DIVISION 8 - INCIDENTALS	
840.00	Concrete Base Pad for Drainage Structures
840.01	Brick Catch Basin - 12" thru 54" Pipe
840.02	Concrete Catch Basin - 12" thru 54" Pipe
840.03	Frame, Grates and Hood - for Use on Standard Catch Basin
840.16	Drop Inlet Frame and Grates - for use with Std. Dwg 840.14 and 840.15
840.22	Frames and Wide Slot Sag Grates
840.24	Frames and Narrow Slot Sag Grates
840.29	Frames and Narrow Slot Flat Grates
840.34	Traffic Bearing Junction Box
840.35	Traffic Bearing Grated Drop Inlet
840.45	Precast Drainage Structure
840.46	Traffic Bearing Precast Drainage Structure
840.66	Drainage Structure Steps
840.72	Pipe Collar
846.01	Concrete Curb, Gutter and Curb & Gutter
846.02	Drop Inlet Installation in Expressway Gutter
848.01	Concrete Sidewalk
848.04	Street Turnout
848.05	Curb Ramp - Proposed Curb & Gutter
852.01	Concrete Islands
852.06	Method for Placement of Drop Inlets in Concrete Islands
862.01	Guardrail Placement
862.02	Guardrail Installation
876.01	Rip Rap in Channels
876.02	Guide for Rip Rap at Pipe Outlets

10/22/2021
W:\80074\...\1A_Rdy_1A.dgn
USER:brutledge

12/2/2016

PROJECT REFERENCE NO.	SHEET NO.
8007.4	1B

STATE OF NORTH CAROLINA, DIVISION OF HIGHWAYS

CONVENTIONAL PLAN SHEET SYMBOLS

Note: Not to Scale **S.U.E. = Subsurface Utility Engineering*

BOUNDARIES AND PROPERTY:

- State Line
- County Line
- Township Line
- City Line
- Reservation Line
- Property Line
- Existing Iron Pin — EIP
- Computed Property Corner
- Property Monument — ECM
- Parcel/Sequence Number — 123
- Existing Fence Line
- Proposed Woven Wire Fence
- Proposed Chain Link Fence
- Proposed Barbed Wire Fence
- Existing Wetland Boundary — WLB
- Proposed Wetland Boundary — WLB
- Existing Endangered Animal Boundary — EAB
- Existing Endangered Plant Boundary — EPB
- Existing Historic Property Boundary — HPB
- Known Contamination Area: Soil — S
- Potential Contamination Area: Soil — S
- Known Contamination Area: Water — W
- Potential Contamination Area: Water — W
- Contaminated Site: Known or Potential

BUILDINGS AND OTHER CULTURE:

- Gas Pump Vent or U/G Tank Cap
- Sign — S
- Well — W
- Small Mine
- Foundation
- Area Outline
- Cemetery
- Building
- School
- Church
- Dam

HYDROLOGY:

- Stream or Body of Water
- Hydro, Pool or Reservoir
- Jurisdictional Stream — JS
- Buffer Zone 1 — BZ 1
- Buffer Zone 2 — BZ 2
- Flow Arrow
- Disappearing Stream
- Spring
- Wetland
- Proposed Lateral, Tail, Head Ditch — FLOW
- False Sump

RAILROADS:

- Standard Gauge — CSX TRANSPORTATION
- RR Signal Milepost — MILEPOST 35
- Switch — SWITCH
- RR Abandoned
- RR Dismantled

RIGHT OF WAY & PROJECT CONTROL:

- Secondary Horiz and Vert Control Point
- Primary Horiz Control Point
- Primary Horiz and Vert Control Point
- Exist Permanent Easement Pin and Cap
- New Permanent Easement Pin and Cap
- Vertical Benchmark
- Existing Right of Way Marker
- Existing Right of Way Line
- New Right of Way Line — RW
- New Right of Way Line with Pin and Cap — RW
- New Right of Way Line with Concrete or Granite R/W Marker — RW
- New Control of Access Line with Concrete C/A Marker — CA
- Existing Control of Access — CA
- New Control of Access — CA
- Existing Easement Line — E
- New Temporary Construction Easement — E
- New Temporary Drainage Easement — TDE
- New Permanent Drainage Easement — PDE
- New Permanent Drainage / Utility Easement — DUE
- New Permanent Utility Easement — PUE
- New Temporary Utility Easement — TUE
- New Aerial Utility Easement — AUE

ROADS AND RELATED FEATURES:

- Existing Edge of Pavement
- Existing Curb
- Proposed Slope Stakes Cut — C
- Proposed Slope Stakes Fill — F
- Proposed Curb Ramp — CR
- Existing Metal Guardrail
- Proposed Guardrail
- Existing Cable Guiderail
- Proposed Cable Guiderail
- Equality Symbol
- Pavement Removal

VEGETATION:

- Single Tree
- Single Shrub
- Hedge
- Woods Line
- Orchard
- Vineyard — Vineyard

EXISTING STRUCTURES:

MAJOR:

- Bridge, Tunnel or Box Culvert — CONC
- Bridge Wing Wall, Head Wall and End Wall — CONC WW

MINOR:

- Head and End Wall — CONC HW
- Pipe Culvert
- Footbridge
- Drainage Box: Catch Basin, DI or JB — CB
- Paved Ditch Gutter
- Storm Sewer Manhole — S
- Storm Sewer — S

UTILITIES:

POWER:

- Existing Power Pole
- Proposed Power Pole
- Existing Joint Use Pole
- Proposed Joint Use Pole
- Power Manhole — P
- Power Line Tower
- Power Transformer
- U/G Power Cable Hand Hole
- H-Frame Pole
- U/G Power Line LOS B (S.U.E.*) — P
- U/G Power Line LOS C (S.U.E.*) — P
- U/G Power Line LOS D (S.U.E.*) — P

TELEPHONE:

- Existing Telephone Pole
- Proposed Telephone Pole
- Telephone Manhole — T
- Telephone Pedestal — T
- Telephone Cell Tower
- U/G Telephone Cable Hand Hole — HH
- U/G Telephone Cable LOS B (S.U.E.*) — T
- U/G Telephone Cable LOS C (S.U.E.*) — T
- U/G Telephone Cable LOS D (S.U.E.*) — T
- U/G Telephone Conduit LOS B (S.U.E.*) — TC
- U/G Telephone Conduit LOS C (S.U.E.*) — TC
- U/G Telephone Conduit LOS D (S.U.E.*) — TC
- U/G Fiber Optics Cable LOS B (S.U.E.*) — T FO
- U/G Fiber Optics Cable LOS C (S.U.E.*) — T FO
- U/G Fiber Optics Cable LOS D (S.U.E.*) — T FO

WATER:

- Water Manhole — W
- Water Meter
- Water Valve
- Water Hydrant
- U/G Water Line LOS B (S.U.E*) — W
- U/G Water Line LOS C (S.U.E*) — W
- U/G Water Line LOS D (S.U.E*) — W
- Above Ground Water Line — A/G Water

TV:

- TV Pedestal — C
- TV Tower
- U/G TV Cable Hand Hole — HH
- U/G TV Cable LOS B (S.U.E.*) — TV
- U/G TV Cable LOS C (S.U.E.*) — TV
- U/G TV Cable LOS D (S.U.E.*) — TV
- U/G Fiber Optic Cable LOS B (S.U.E.*) — TV FO
- U/G Fiber Optic Cable LOS C (S.U.E.*) — TV FO
- U/G Fiber Optic Cable LOS D (S.U.E.*) — TV FO

GAS:

- Gas Valve
- Gas Meter
- U/G Gas Line LOS B (S.U.E.*) — G
- U/G Gas Line LOS C (S.U.E.*) — G
- U/G Gas Line LOS D (S.U.E.*) — G
- Above Ground Gas Line — A/G Gas

SANITARY SEWER:

- Sanitary Sewer Manhole
- Sanitary Sewer Cleanout
- U/G Sanitary Sewer Line — SS
- Above Ground Sanitary Sewer — A/G Sanitary Sewer
- SS Forced Main Line LOS B (S.U.E.*) — FSS
- SS Forced Main Line LOS C (S.U.E.*) — FSS
- SS Forced Main Line LOS D (S.U.E.*) — FSS

MISCELLANEOUS:

- Utility Pole
- Utility Pole with Base
- Utility Located Object
- Utility Traffic Signal Box — S
- Utility Unknown U/G Line LOS B (S.U.E.*) — ?UTL
- U/G Tank; Water, Gas, Oil
- Underground Storage Tank, Approx. Loc. — UST
- A/G Tank; Water, Gas, Oil
- Geoenvironmental Boring
- U/G Test Hole LOS A (S.U.E.*)
- Abandoned According to Utility Records — AATUR
- End of Information — E.O.I.

PROJECT REFERENCE NO.	SHEET NO.
80074	1C-1
Location and Surveys	

SURVEY CONTROL SHEET 80074

W/ EXISTING CENTERLINE ALIGNMENTS PRIOR TO CONSTRUCTION

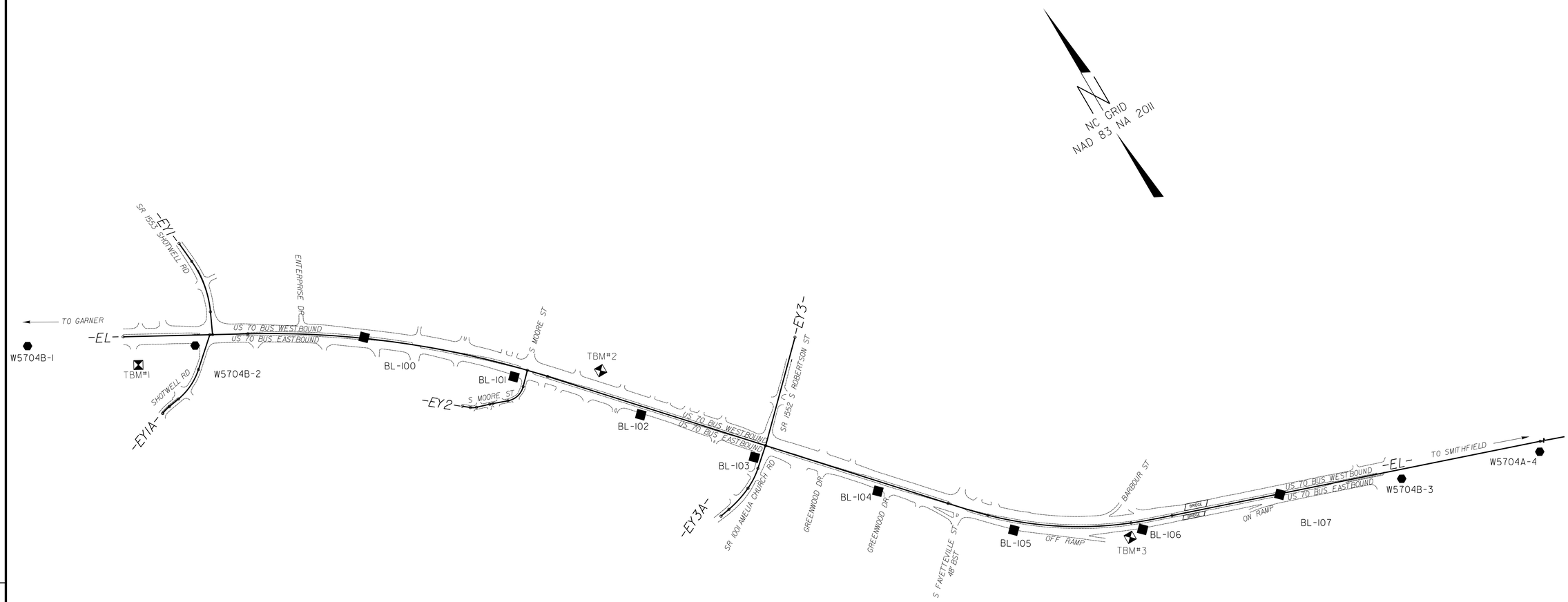

DATUM DESCRIPTION

THE LOCALIZED COORDINATE SYSTEM DEVELOPED FOR THIS PROJECT IS BASED ON THE STATE PLANE COORDINATES ESTABLISHED BY NCDOT FOR MONUMENT "W5704A-4"
WITH NAD 83/NA 2011 STATE PLANE GRID COORDINATES OF
NORTHING: 689572.893(ft) EASTING: 2161708.733(ft)
ELEVATION: 324.246(ft)
THE AVERAGE COMBINED GRID FACTOR USED ON THIS PROJECT (GROUND TO GRID) IS: 0.99988687
THE N.C. LAMBERT GRID BEARING AND LOCALIZED HORIZONTAL GROUND DISTANCE FROM "W5704A-4" TO -L- 10+00.00 IS
N 55°01'10.08"W 8,861.81'
ALL LINEAR DIMENSIONS ARE LOCALIZED HORIZONTAL DISTANCES
VERTICAL DATUM USED IS NAVD 88

NOTES:

1. IF FURTHER INFORMATION REGARDING PROJECT CONTROL IS NEEDED, PLEASE CONTACT THE LOCATION AND SURVEYS UNIT.
2. PROJECT CONTROL WAS ESTABLISHED USING GNSS, THE GLOBAL NAVIGATION SATELLITE SYSTEM.
3. NOTE: DRAWING NOT TO SCALE

6/2/99

10/7/2021
...\w5704b_ls_lc1.dgn
USER:default

PROJECT REFERENCE NO.	SHEET NO.
80074	1C-2

Location and Surveys

PROJECT SURVEYOR

SURVEY CONTROL SHEET 80074

W/ EXISTING CENTERLINE ALIGNMENTS PRIOR TO CONSTRUCTION

BASELINE DATA

BL

POINT	DESC.	NORTH	EAST	ELEVATION
1	W5704B-1	694904.6232	2153904.3110	285.57
2	W5704B-2	694379.5330	2154807.5990	288.75
100	BL-100	693891.6345	2155742.4922	273.37
101	BL-101	693207.3621	2156424.6293	263.24
102	BL-102	692603.5960	2156987.6256	263.79
103	BL-103	692017.1447	2157465.0346	262.50
104	BL-104	691445.2714	2158022.7891	263.48
105	BL-105	690807.3685	2158631.1374	270.11
106	BL-106	690405.6063	2159327.1348	282.18
107	BL-107	690161.9456	2160176.0502	282.13
3	W5704B-3	689862.3680	2160880.9750	293.45

BENCHMARK DATA

```
****************************************
BM1       ELEVATION = 287.12
N 694468      E 2154424
YELLOW BENCH TIE IN 12IN MAPLE
****************************************
****************************************
BM2       ELEVATION = 267.63
N 692967      E 2156910
YELLOW BENCH TIE IN 8IN OAK
****************************************
****************************************
BM3       ELEVATION = 275.41
N 690403      E 2159235
YELLOW BENCH TIE IN 7IN CHERRY
****************************************
```

NOTES:

1. IF FURTHER INFORMATION REGARDING PROJECT CONTROL IS NEEDED, PLEASE CONTACT THE LOCATION AND SURVEYS UNIT.

2. PROJECT CONTROL WAS ESTABLISHED USING GNSS, THE GLOBAL NAVIGATION SATELLITE SYSTEM.

6/2/99

10/7/2021
...\w5704b_ls_1c2.dgn
USER:default

6/2/99

PROJECT REFERENCE NO.	SHEET NO.
80074	1C-3
Location and Surveys	

PROJECT SURVEYOR

SURVEY CONTROL SHEET 80074

W/ EXISTING CENTERLINE ALIGNMENTS PRIOR TO CONSTRUCTION

ALIGNMENT DATA

EL

POINT	N	E	BEARING	DIST	DELTA	D	L	T	R	DELTA S	Ls	LT	ST
POT	694653.349	2154447.841											
LINE			S 61°02'24.2" E	777.63									
PC	694276.820	2155128.237											
CURVE			S 51°33'23.0" E	1888.08	18°58'02.4"(RT)	01°00'00.0"	1896.73	957.12	5729.58				
PT	693102.915	2156607.023											
LINE			S 42°04'21.8" E	2618.93									
TS	691158.893	2158361.901											
SPIRAL			S 43°09'21.7" E	259.96						03°15'00.0"(LT)	260.00	173.36	86.69
SC	690969.252	2158539.712											
CURVE			S 56°33'55.9" E	893.66	22°29'08.2"(LT)	02°30'00.0"	899.42	455.57	2291.83				
CS	690476.858	2159285.490											
SPIRAL			S 69°58'30.1" E	259.96						03°15'00.0"(LT)	260.00	173.36	86.69
ST	690387.839	2159529.736											
LINE			S 71°03'30.0" E	2341.46									
PC	689627.788	2161744.408											
CURVE			S 69°27'13.0" E	448.07	03°12'34.1"(RT)	00°42'58.3"	448.13	224.12	8000.00				
PT	689470.532	2162163.972											
LINE			S 67°50'55.9" E	0.82									
PC	689470.222	2162164.734											
CURVE			S 62°24'23.8" E	1195.02	10°53'04.3"(RT)	00°54'34.0"	1196.82	600.21	6300.00				
PT	688916.697	2163223.826											
LINE			S 56°57'51.6" E	3.10									
PC	688915.008	2163226.423											
CURVE			S 54°59'56.3" E	233.21	03°55'50.6"(RT)	01°41'06.6"	233.25	116.67	3400.00				
PT	688781.242	2163417.454											
LINE			S 53°02'01.0" E	2795.10									
PC	687100.418	2165650.708											
CURVE			S 51°30'29.5" E	103.82	03°03'03.0"(RT)	02°56'17.7"	103.83	51.93	1950.00				
PT	687035.800	2165731.967											
LINE			S 49°58'58.0" E	4.42									
PC	687032.960	2165735.350											
CURVE			S 51°31'34.1" E	105.04	03°05'12.1"(LT)	02°56'17.7"	105.05	52.54	1950.00				
PT	686967.609	2165817.584											
LINE			S 53°04'10.1" E	2356.54									
PC	685551.691	2167701.319											
CURVE			S 50°48'55.7" E	450.68	04°30'28.8"(RT)	01°00'00.0"	450.80	225.52	5729.58				
PT	685266.939	2168050.652											
LINE			S 48°33'41.3" E	3.25									
POT	685264.789	2168053.088											

EY1

POINT	N	E	BEARING	DIST	DELTA	D	L	T	R
POT	694979.290	2155042.666							
LINE			S 04°56'48.2" E	136.44					
PC	694843.355	2155054.432							
CURVE			S 09°59'43.4" W	335.20	29°53'03.2"(RT)	08°48'53.0"	339.03	173.46	650.00
PT	694513.247	2154996.252							
LINE			S 24°56'15.0" W	143.31					
POT	694383.298	2154935.829							

EY1A

POINT	N	E	BEARING	DIST	DELTA	D	L	T	R
POT	694391.674	2154920.694							
LINE			S 48°25'26.0" W	228.61					
PC	694239.963	2154749.674							
CURVE			S 64°29'34.3" W	221.44	32°08'16.6"(RT)	14°19'26.2"	224.37	115.22	400.00
PT	694144.608	2154549.821							
LINE			S 80°33'42.6" W	74.55					
PC	694132.383	2154476.280							
CURVE			S 74°40'33.8" W	57.43	11°46'17.5"(LT)	20°27'46.0"	57.53	28.86	280.00
PT	694117.206	2154420.896							
LINE			S 68°47'25.1" W	2.07					
POT	694116.459	2154418.970							

EY2

POINT	N	E	BEARING	DIST	DELTA	D	L	T	R
POT	693200.016	2156517.315							
LINE			S 44°43'43.0" W	105.16					
PC	693125.303	2156443.306							
CURVE			S 77°20'11.9" W	129.33	65°12'57.8"(RT)	47°44'47.3"	136.59	76.77	120.00
PT	693096.950	2156317.119							
LINE			N 70°03'19.2" W	95.60					
PC	693129.561	2156227.252							
CURVE			N 71°21'11.2" W	20.38	02°35'43.9"(LT)	12°43'56.6"	20.39	10.19	450.00
PT	693136.078	2156207.938							
LINE			N 72°39'03.1" W	84.76					
PC	693161.355	2156127.030							
CURVE			N 61°40'28.7" W	38.08	21°57'08.7"(RT)	57°17'44.8"	38.31	19.39	100.00
PT	693179.423	2156093.509							
LINE			N 50°41'54.4" W	51.21					
POT	693211.862	2156053.878							

EY3

POINT	N	E	BEARING	DIST
POT	692426.389	2157951.334		
LINE			S 45°27'35.0" W	545.06
POT	692044.079	2157562.839		

EY3A

POINT	N	E	BEARING	DIST	DELTA	D	L	T	R
POT	692045.232	2157561.798							
LINE			S 48°36'40.0" W	150.34					
PC	691945.836	2157449.011							
CURVE			S 56°57'55.1" W	138.03	16°42'30.2"(RT)	12°03'44.2"	138.52	69.75	475.00
PT	691870.590	2157333.297							
LINE			S 65°19'10.2" W	0.39					
PC	691870.426	2157332.940							
CURVE			S 72°25'30.2" W	176.89	14°12'40.0"(RT)	08°00'48.2"	177.34	89.13	715.00
PT	691817.014	2157164.309							
LINE			S 79°31'50.2" W	65.07					
POT	691805.191	2157100.323							

NOTES:

1. IF FURTHER INFORMATION REGARDING PROJECT CONTROL IS NEEDED, PLEASE CONTACT THE LOCATION AND SURVEYS UNIT.

2. PROJECT CONTROL WAS ESTABLISHED USING GNSS, THE GLOBAL NAVIGATION SATELLITE SYSTEM.

10/7/2021
dgn\80074sb_ls_lc3.dgn
USER:dpuit

DocuSign Envelope ID: D2D85B51-871B-4D61-9DC0-027531D9417F

6/2/99

PROJECT REFERENCE NO.	SHEET NO.
80074	2A-1

ROADWAY DESIGN ENGINEER	PAVEMENT DESIGN ENGINEER
NORTH CAROLINA PROFESSIONAL SEAL 32606 ENGINEER BENJAMIN R. CRAWFORD	NORTH CAROLINA PROFESSIONAL SEAL ENGINEER LAWRENCE A. WOOD
Benjamin R. Crawford	Lawrence A. Wood, III
DocuSigned by: 10AD29B3E39E484...	DocuSigned by: 0A450448...
10/11/2021	10/11/2021

DOCUMENT NOT CONSIDERED FINAL UNLESS ALL SIGNATURES COMPLETED

SEPI Engineering & Construction, Inc.
1 Glenwood Avenue
Raleigh, NC 27603
Tel:919.789.9977
Fax:919.789.9591
License: C-2197

℄ –L–

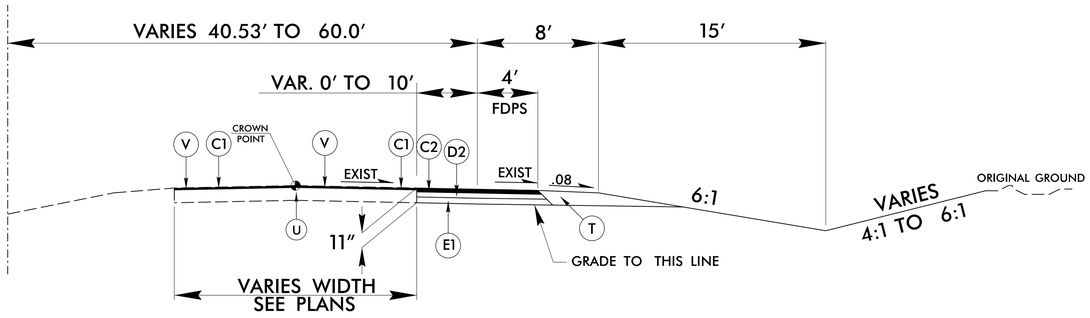

TYPICAL SECTION NO. 1

–L– STA. 4+30.50 TO STA. 23+18.00 RT

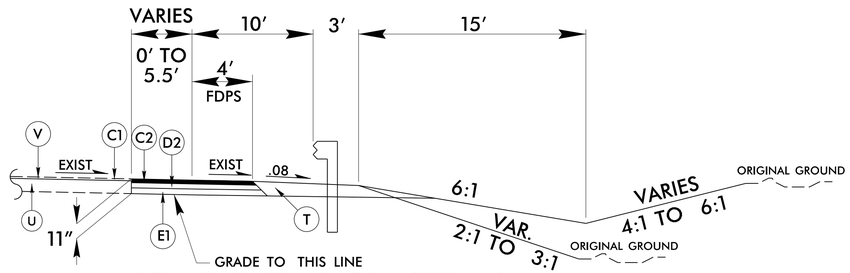

DETAIL 1 TO BE USED WITH TYPICAL SECTION NO. 1

–L– STA. 4+30.50 TO STA. 7+86.78 RT

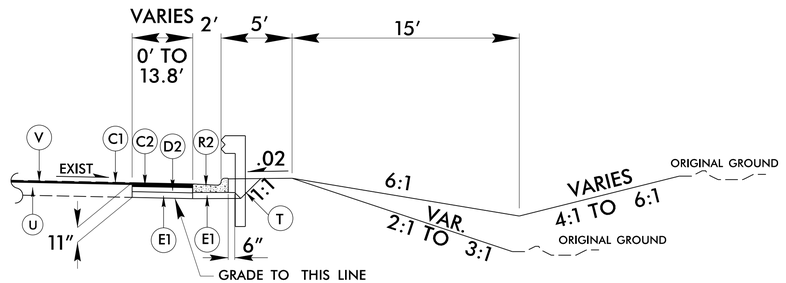

DETAIL 2 TO BE USED WITH TYPICAL SECTION NO. 1

–L– STA. 13+50.74 TO STA. 16+14.80 RT

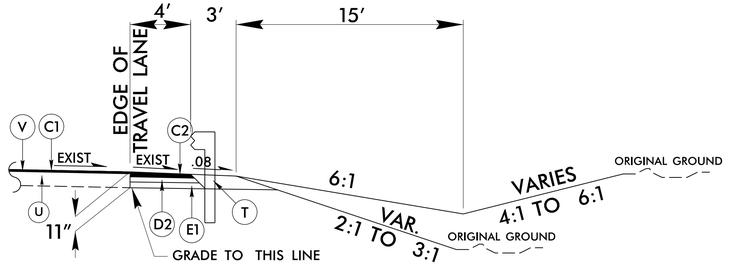

DETAIL 3 TO BE USED WITH TYPICAL SECTION NO. 1

–L– STA. 16+14.80 TO STA. 17+66.77 RT

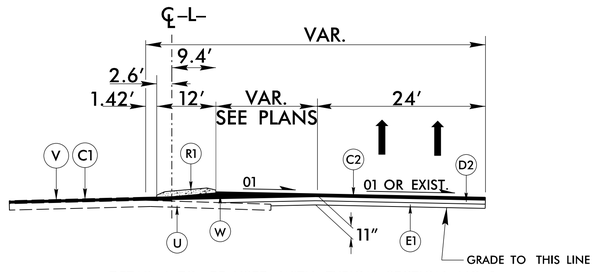

DETAIL 4 TO BE USED WITH TYPICAL SECTION NO. 1
MEDIAN DETAIL – REVERSE FOR WESTBOUND TURN LANE
–L– STA. 16+17.96 TO 19+62.71

PAVEMENT SCHEDULE

C1	PROP. APPROX. 1 1/2″ ASPHALT CONCRETE SURFACE COURSE, TYPE S9.5C, AT AN AVERAGE RATE OF 168 LBS. PER SQ. YD.
C2	PROP. APPROX. 3″ ASPHALT CONCRETE SURFACE COURSE, TYPE S9.5C, AT AN AVERAGE RATE OF 168 LBS. PER SQ. YD. IN EACH OF TWO LAYERS
C3	PROP. VAR. DEPTH ASPHALT CONCRETE SURFACE COURSE, TYPE S9.5C, AT AN AVERAGE RATE OF 112 LBS. PER SQ. YD. PER 1″ DEPTH TO BE PLACED IN LAYERS NOT LESS THAN 1.5″ OR GREATER THAN 2″ IN DEPTH.
D1	PROP. APPROX. 2 ½″ ASPHALT CONCRETE INTERMEDIATE COURSE, TYPE I19.0C, AT AN AVERAGE RATE OF 285 LBS. PER SQ. YD.
D2	PROP. APPROX. 4″ ASPHALT CONCRETE INTERMEDIATE COURSE, TYPE I19.0C, AT AN AVERAGE RATE OF 456 LBS. PER SQ. YD.
D3	PROP. VAR. DEPTH ASPHALT CONCRETE INTERMEDIATE COURSE, TYPE I19.0C, AT AN AVERAGE RATE OF 114 LBS. PER SQ. YD. PER 1″ DEPTH TO BE PLACED IN LAYERS NOT LESS THAN 2½″ OR GREATER THEN 4″ IN DEPTH.
E1	PROP. APPROX. 4″ ASPHALT CONCRETE BASE COURSE, TYPE B25.0C, AT AN AVERAGE RATE OF 456 LBS. PER SQ. YD.
E2	PROP. VAR. DEPTH ASPHALT CONCRETE BASE COURSE, TYPE B25.0C, AT AN AVERAGE RATE OF 114 LBS. PER SQ. YD. PER 1″ DEPTH TO BE PLACED IN LAYERS NOT LESS THAN 3″ OR GREATER THAN 5 ½″ IN DEPTH.
R1	PROP. 5″ MONOLITHIC CONCRETE ISLAND (KEYED IN)
R2	PROP. 2′–6″ CONCRETE CURB & GUTTER
R3	PROP. 4′ CONCRETE EXPRESSWAY GUTTER
S	PROP. 4″ SIDEWALK
T	EARTH MATERIAL
U	EXISTING PAVEMENT
V	1 1/2″ DEPTH MILLING
W	VARIABLE DEPTH ASPHALT PAVEMENT (SEE WEDGING DETAIL)

NOTES: PAVEMENT EDGE SLOPES ARE 1:1 UNLESS SHOWN OTHERWISE.

℄ –L–

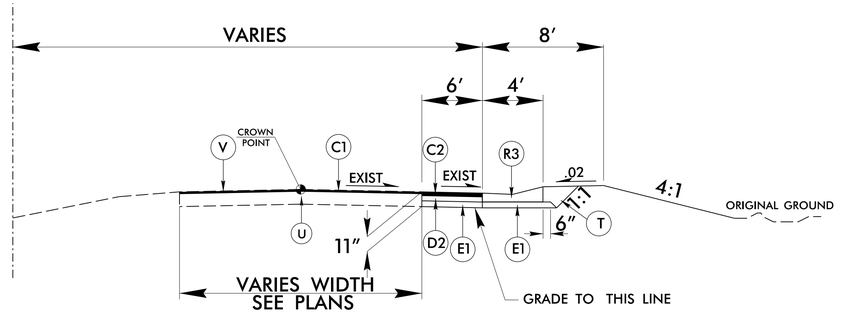

DETAIL 5 TO BE USED WITH TYPICAL SECTION NO. 1

–L– STA. 18+73.04 TO STA. 22+19.92 RT

10/8/2021
I:\Projects\80074\08 Rdy_typ.dgn
USER:bburris

DocuSign Envelope ID: D2D85B51-871B-4D61-9DC0-027531D9417F

6/2/99

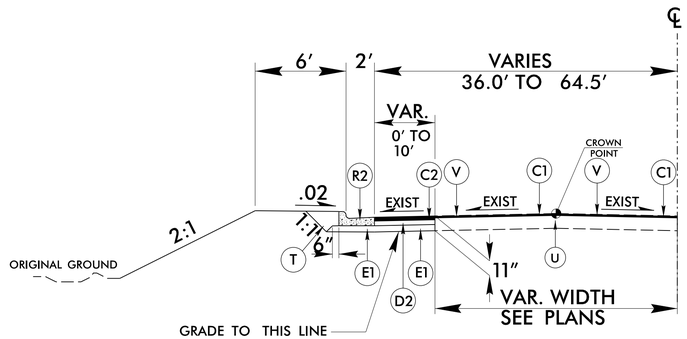

TYPICAL SECTION NO. 2

–L– STA. 14+41.58 TO STA. 20+62.85 LT

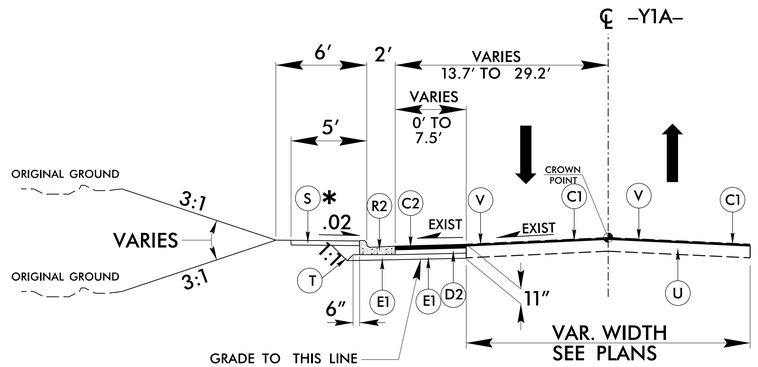

TYPICAL SECTION NO. 3

*–Y1A– STA. 12+00.00 TO STA. 14+42.41
–Y1A– STA. 14+42.41 TO STA. 15+41.34

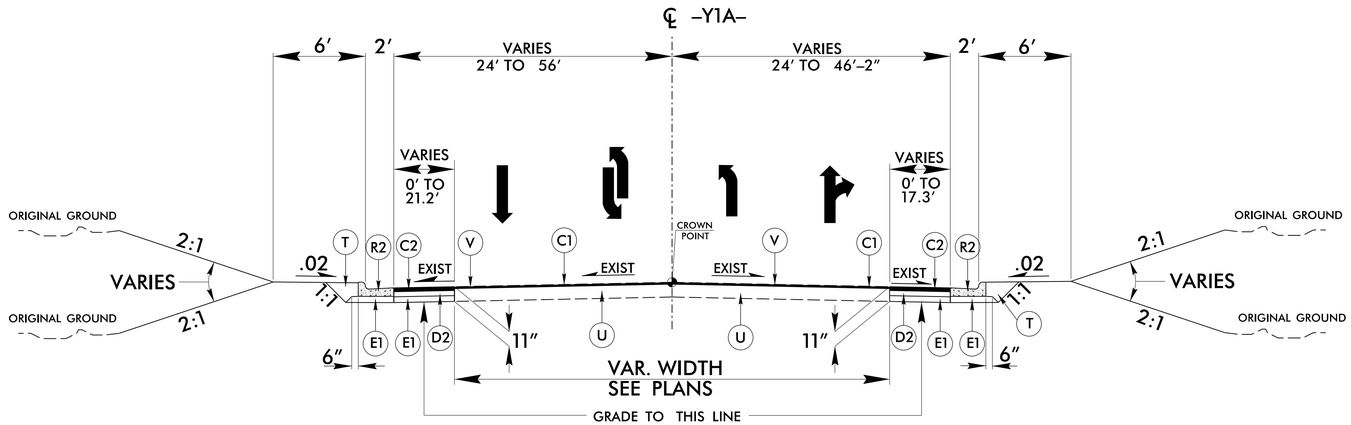

TYPICAL SECTION NO. 4

–Y1A– STA. 15+41.34 TO STA. 18+60.86

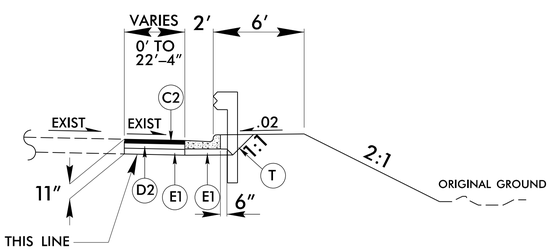

USE WITH TYPICAL SECTION NO. 4
–Y1A– STA. 16+61.64 TO STA. 18+34.44 RT

PROJECT REFERENCE NO.	SHEET NO.
80074	2A-2

ROADWAY DESIGN ENGINEER
NORTH CAROLINA PROFESSIONAL SEAL 32606 ENGINEER BENJAMIN R CRAWFORD
Benjamin R Crawford
10/11/2021

PAVEMENT DESIGN ENGINEER
NORTH CAROLINA PROFESSIONAL SEAL ENGINEER
Norwood Robinson Gurley III
10/11/2021

DOCUMENT NOT CONSIDERED FINAL UNLESS ALL SIGNATURES COMPLETED

SEPI Engineering & Construction, Inc.
1 Glenwood Avenue
Raleigh, NC 27603
Tel:919.789.9977
Fax:919.789.9591
License: C-2197

PAVEMENT SCHEDULE	
C1	1.5″ S9.5C
C2	3″ S9.5C
C3	VAR. DEPTH S9.5C
D1	2.5″ I19.0C
D2	4″ I19.0C
D3	VAR. DEPTH I19.0C
E1	4″ B25.0C
E2	VAR. DEPTH B25.0C
R1	5″ MONO. ISLAND (KEYED IN)
R2	PROP. 2′-6″ CURB & GUTTER
R3	PROP. 4′ EXPRESSWAY GUTTER
S	PROP. 4″ SIDEWALK
T	EARTH MATERIAL
U	EXISTING PAVEMENT
V	1.5″ MILLING
W	VAR. DEPTH WEDGING

NOTES: PAVEMENT EDGE SLOPES ARE 1:1 UNLESS SHOWN OTHERWISE.

10/8/2021
W:\80074\Roadway\Design\80074_Rdy_typ.dgn
tbrittain

DocuSign Envelope ID: D2D85B51-871B-4D61-9DC0-027531D9417F

6/2/99

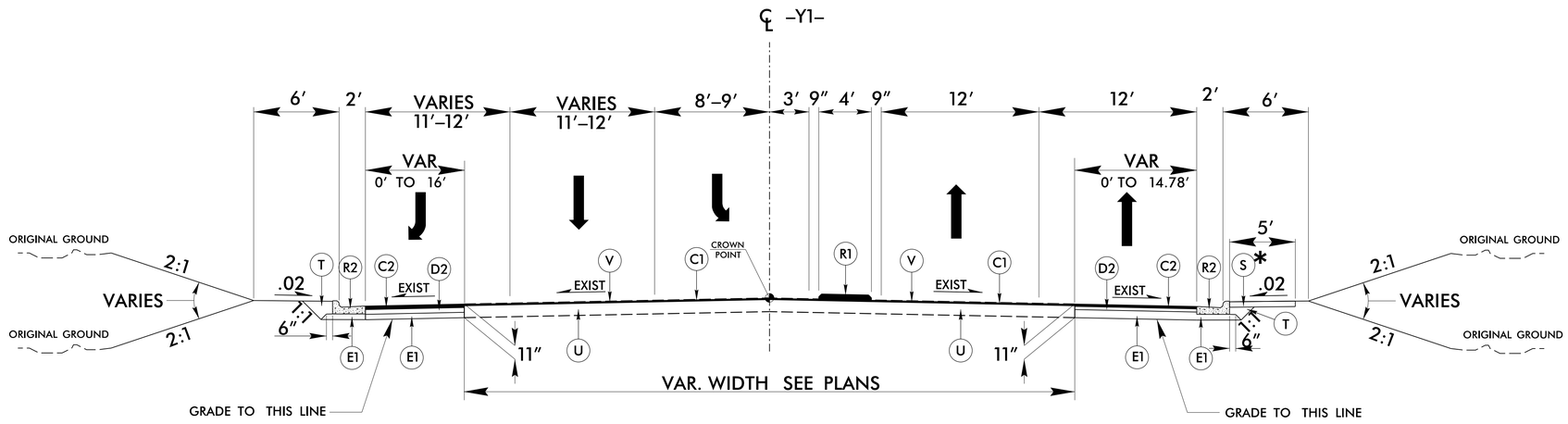

TYPICAL SECTION NO. 5

–Y1– STA. 10+71.30 TO STA. 11+79.59
✱ –Y1– STA. 11+79.59 TO STA. 14+21.30

NOTE: TRANSITION FROM T.S. NO. 5 TO T. S. NO. 6
–Y1– STA. 14+21.30 TO STA. 14+54.84

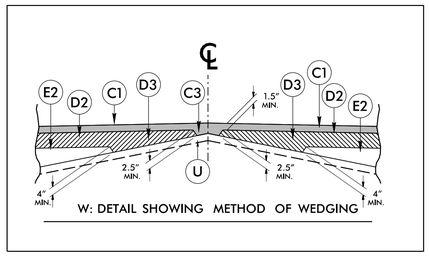

W: DETAIL SHOWING METHOD OF WEDGING

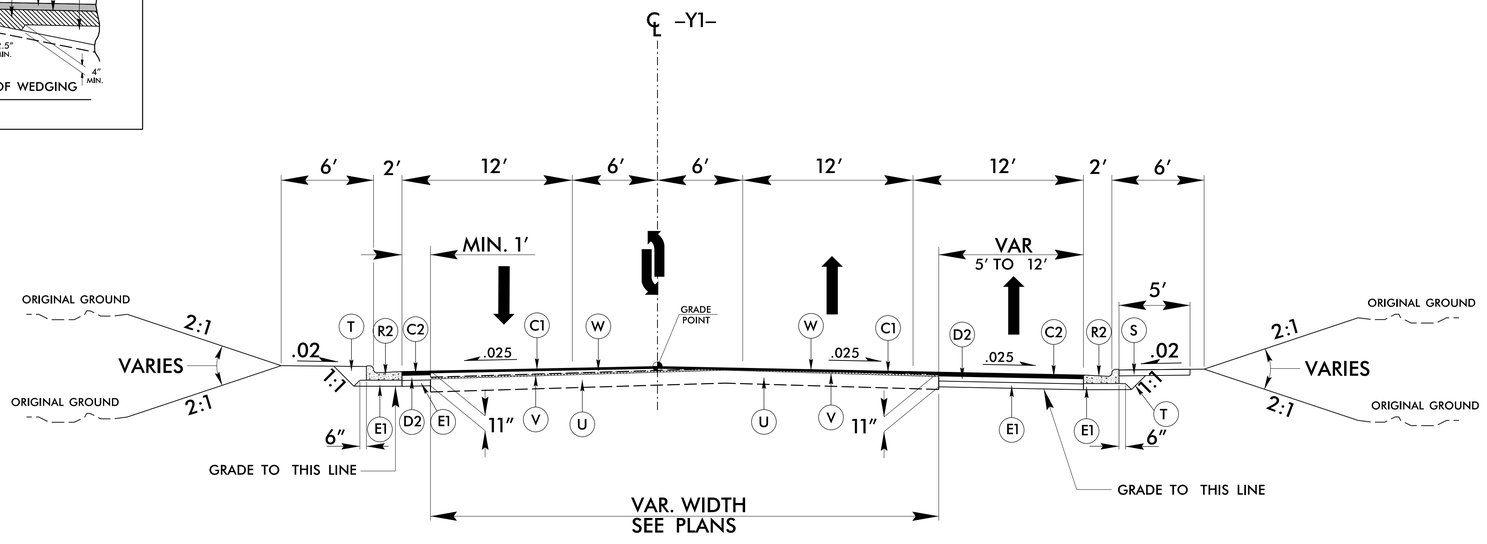

TYPICAL SECTION NO. 6

–Y1– STA. 14+54.84 TO STA. 20+60.00

PROJECT REFERENCE NO.	SHEET NO.
80074	2A-3

ROADWAY DESIGN ENGINEER

NORTH CAROLINA PROFESSIONAL SEAL 32606 ENGINEER BENJAMIN R. CRAWFORD

Signed by: Benjamin R Crawford 61DA2983E39E404...

10/11/2021

PAVEMENT DESIGN ENGINEER

NORTH CAROLINA PROFESSIONAL SEAL ENGINEER JOHN L. GOURLEY III

DocuSigned by: John L Gourley III 0B0A3A450449...

10/11/2021

DOCUMENT NOT CONSIDERED FINAL UNLESS ALL SIGNATURES COMPLETED

SEPI Engineering & Construction, Inc.
1 Glenwood Avenue
Raleigh, NC 27603
Tel:919.789.9977
Fax:919.789.9591
License: C-2197

PAVEMENT SCHEDULE

C1	1.5″ S9.5C
C2	3″ S9.5C
C3	VAR. DEPTH S9.5C
D1	2.5″ I19.0C
D2	4″ I19.0C
D3	VAR. DEPTH I19.0C
E1	4″ B25.0C
E2	VAR. DEPTH B25.0C
R1	5″ MONO. ISLAND (KEYED IN)
R2	PROP. 2′-6″ CURB & GUTTER
R3	PROP. 4′ EXPRESSWAY GUTTER
S	PROP. 4″ SIDEWALK
T	EARTH MATERIAL
U	EXISTING PAVEMENT
V	1.5″ MILLING
W	VAR. DEPTH WEDGING

NOTES: PAVEMENT EDGE SLOPES ARE 1:1 UNLESS SHOWN OTHERWISE.

10/8/2021
10/5/2021
10/4/2021
10/4/2021
10/4

DocuSign Envelope ID: 592603A2-D042-4443-8376-475C0374548F

PROJECT REFERENCE NO.	SHEET NO.
80074	2C-1

DOCUMENT NOT CONSIDERED FINAL UNLESS ALL SIGNATURES COMPLETED

STATE OF NORTH CAROLINA
DEPT. OF TRANSPORTATION
DIVISION OF HIGHWAYS
RALEIGH, N.C.

ROADWAY DETAIL DRAWING FOR
GUARDRAIL INSTALLATION

SHEET 6 OF 8
862D02

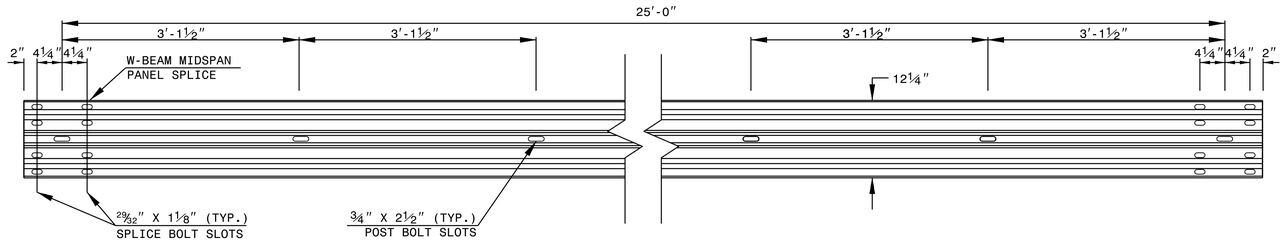

STANDARD W-BEAM GUARDRAIL

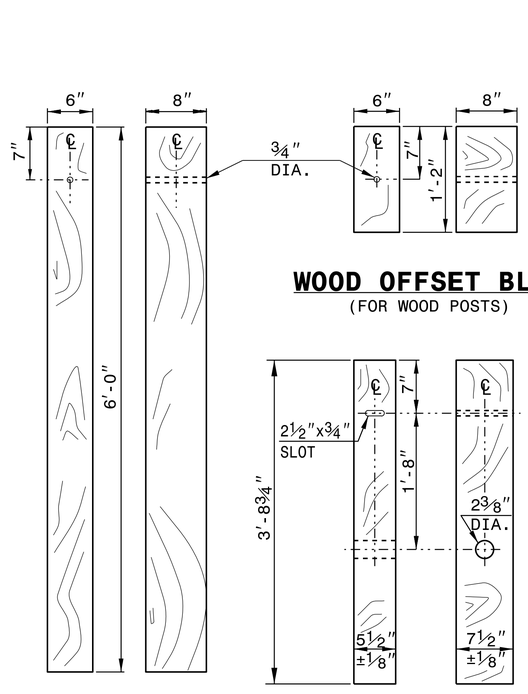

WOOD OFFSET BLOCK
(FOR WOOD POSTS)

STANDARD LINE POST

SHORT WOOD BREAKAWAY POST

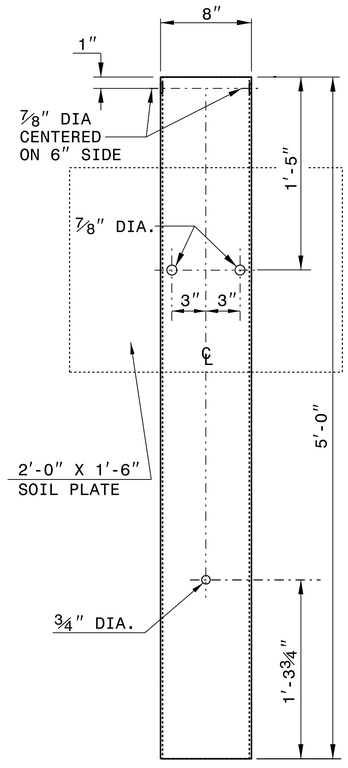

STEEL TUBE
TS 6"x8"x0.1875"

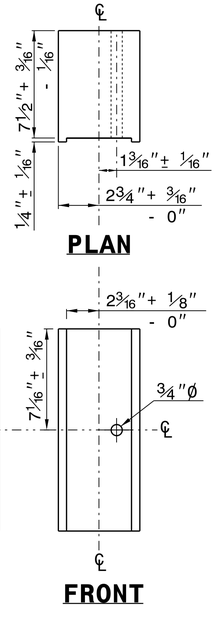

PLAN

SIDE

FRONT

ROUTED OFFSET BLOCK

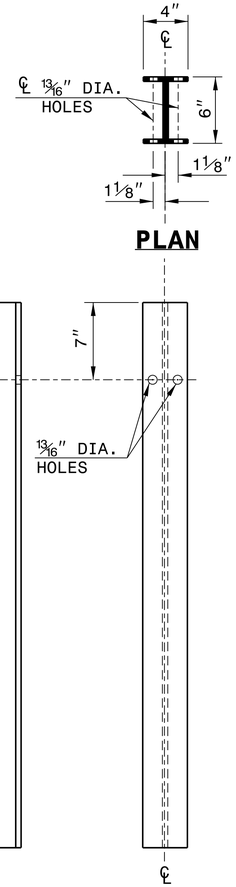

PLAN

SIDE

FRONT

"W6" STEEL POST

SYSTEM PARTS

STATE OF
NORTH CAROLINA
DEPT. OF TRANSPORTATION
DIVISION OF HIGHWAYS
RALEIGH, N.C.

ROADWAY DETAIL DRAWING FOR
GUARDRAIL INSTALLATION

SHEET 6 OF 8
862D02

NORTH CAROLINA PROFESSIONAL SEAL 022966 ENGINEER JOHN S. HOWERTON

Signed by: John S. Howerton
873F3D17DCDC45F...

10/11/2021

CONTRACTS STANDARDS AND DEVELOPMENT UNIT
Office 919-707-6950 FAX 919-250-4119

SEE TITLE BLOCK

ORIGINAL BY: J.HOWERTON DATE: 3-7-2018
MODIFIED BY: DATE:
CHECKED BY: DATE:
FILE SPEC.:

DocuSign Envelope ID: C32D1881-45CA-4637-B122-52B81593D4DF

PROJECT REFERENCE NO.	SHEET NO.
80074	2C-2

GENERAL NOTES:

USE CLASS "B" CONCRETE THROUGHOUT.

PROVIDE ALL CATCH BASINS OVER 3'-6" IN DEPTH WITH STEPS 12" ON CENTER. USE STEPS WHICH COMPLY WITH STD. DRAWING 840.66.

OPTIONAL CONSTRUCTION - MONOLITHIC POUR, 2" KEYWAY, OR #4 BAR DOWELS AT 12" CENTERS AS DIRECTED BY THE ENGINEER.

USE FORMS FOR THE CONSTRUCTION OF THE BOTTOM SLAB.

IF REINFORCED CONCRETE PIPE IS SET IN BOTTOM SLAB OF BOX, ADD TO SLAB AS SHOWN ON STD. NO. 840.00.

USE TYPE "E", "F" AND "G" GRATES UNLESS OTHERWISE INDICATED.

FOR 8'-0" IN HEIGHT OR LESS USE 6" WALLS AND BOTTOM SLAB. OVER 8'-0" TO 16'-0" IN HEIGHT USE 8" WALLS AND BOTTOM SLAB. ADJUST QUANTITIES ACCORDINGLY.

CONSTRUCT WITH PIPE CROWNS MATCHING.

CHAMFER ALL EXPOSED CORNERS 1".

** FOR STRUCTURES WITH PIPE LARGER THAN 54", MAKE THE TOP SLAB 8" THICK.

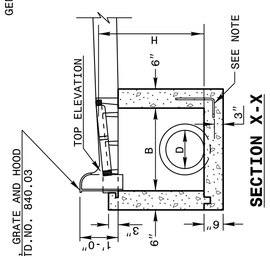

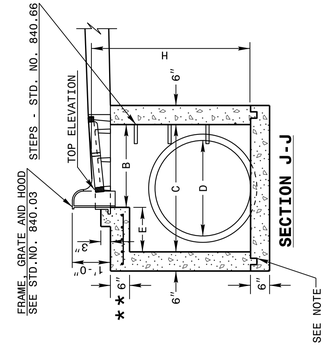

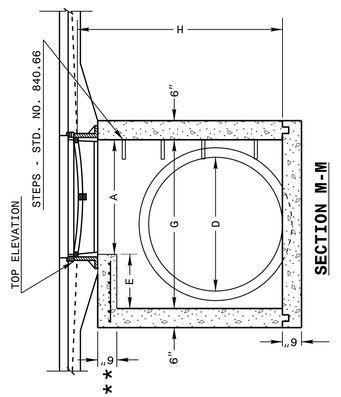

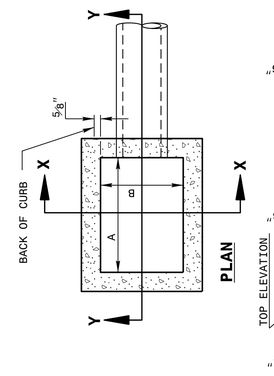

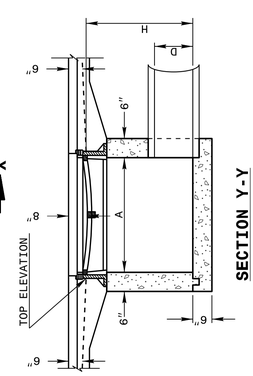

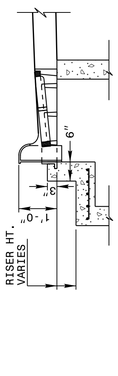

DETAIL SHOWING METHOD OF RISER CONSTRUCTION

STATE OF NORTH CAROLINA DEPT. OF TRANSPORTATION DIVISION OF HIGHWAYS RALEIGH, N.C.	ENGLISH DETAIL DRAWING FOR **MINIMUM DEPTH CONCRETE CATCH BASIN** 12" THRU 84" PIPE	SHEET 1 OF 2 **840D02**

STATE OF NORTH CAROLINA DEPT. OF TRANSPORTATION DIVISION OF HIGHWAYS RALEIGH, N.C.	ENGLISH DETAIL DRAWING FOR **MINIMUM DEPTH CONCRETE CATCH BASIN** 12" THRU 84" PIPE	SHEET 2 OF 2 **840D02**

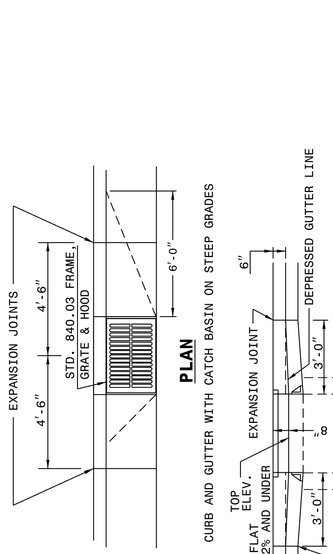

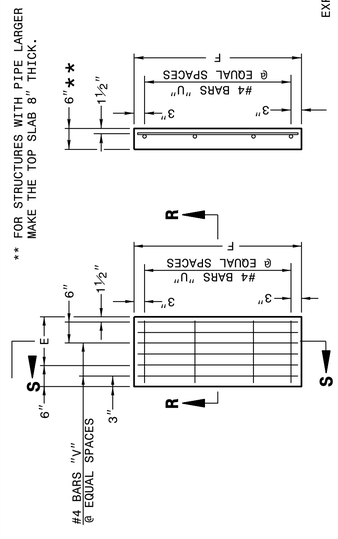

* RISER HAS .228 CUBIC YARDS OF CONCRETE PER FOOT HEIGHT

MINIMUM DIMENSIONS AND QUANTITIES FOR CONCRETE CATCH BASIN(BASED ON MIN. HEIGHT, H, WITH NO RISER) *

PIPE D	DIMENSIONS OF BOX AND PIPE SPAN A	WIDTH B	WIDTH C	SPAN G	MIN. HEIGHT H	COVER DIMENSION E	COVER DIMENSION F	BARS-U NO.	BARS-U LENGTH	BARS-V NO.	BARS-V LENGTH	BARS-W NO.	BARS-W LENGTH	TOTAL LBS.	CU.YDS. CONC. IN BOX TOP SLAB	CU.YDS. CONC. IN BOX BOTTOM SLAB	CU.YDS. CONC. IN BOX TOT. CONC. PER LINEAL FT. MIN. HEIGHT	DEDUCTIONS ONE PIPE C.M.	DEDUCTIONS ONE PIPE R.C.
12"	3'-0"	2'-2"	--	--	2'-0"	--	--	--	--	--	--	--	--	--	--	0.235	0.772	0.015	0.026
15"	3'-0"	2'-2"			2'-3"											0.235	0.829	0.023	0.036
18"	3'-0"	2'-2"			2'-6"											0.235	0.887	0.033	0.049
24"	3'-0"	2'-2"			3'-1"											0.235	1.001	0.059	0.085
30"	3'-0"	2'-2"	3'-4"	3'-4"	3'-10"	1'-2"	4'-4"	4	1'-6"	2	4'-1"	3	4'-1"	39	0.123	0.347	1.433	0.092	0.127
36"	3'-0"	2'-2"	3'-10"	3'-10"	4'-4"	1'-8"	4'-10"	4	1'-11"	3	4'-7"	3	4'-7"	43	0.161	0.432	1.714	0.132	0.178
42"	3'-0"	2'-2"	4'-5"	4'-5"	4'-11"	2'-2"	5'-5"	5	2'-5"	4	5'-1"	3	5'-2"	47	0.200	0.543	1.738	0.160	0.243
48"	3'-0"	2'-2"	5'-0"	5'-0"	5'-6"	2'-10"	6'-0"	5	3'-1"	4	5'-9"	3	5'-9"	51	0.235	0.667	2.052	0.235	0.317
54"	3'-0"	2'-2"	5'-7"	5'-7"	6'-0"	3'-5"	6'-7"	6	3'-8"	5	6'-4"	3	6'-4"	56	0.289	0.802	2.387	0.297	0.401
60"	3'-0"	2'-2"	6'-3"	6'-3"	6'-6"	4'-1"	7'-3"	6	4'-4"	6	7'-0"	3	7'-0"	61	0.340	0.973	2.722	0.363	0.546
66"	3'-0"	2'-2"	6'-11"	6'-11"	7'-0"	4'-8"	7'-11"	7	5'-0"	6	7'-6"	3	7'-8"	66	0.391	1.160	3.057	0.440	0.655
72"	3'-0"	2'-2"	7'-6"	7'-6"	7'-6"	5'-3"	8'-6"	7	5'-6"	6	8'-3"	3	8'-3"	72	0.442	1.340	3.392	0.524	0.774
78"	3'-0"	2'-2"	8'-1"	8'-1"	8'-0"	5'-11"	9'-1"	8	6'-2"	7	8'-10"	3	8'-10"	78	0.493	1.530	3.727	0.615	0.893
84"	3'-0"	2'-2"	8'-9"	8'-9"	8'-6"	6'-7"	9'-9"	8	6'-10"	7	9'-6"	3	9'-6"	84	0.544	1.760	4.062	0.713	1.010

STATE OF NORTH CAROLINA DEPT. OF TRANSPORTATION DIVISION OF HIGHWAYS RALEIGH, N.C.	ENGLISH DETAIL DRAWING FOR **MINIMUM DEPTH CONCRETE CATCH BASIN** 12" THRU 84" PIPE	SHEET 2 OF 2 **840D02**

NORTH CAROLINA PROFESSIONAL SEAL 022966 ENGINEER Joel S. Howerton
Digitally signed by: Joel S. Howerton 673F3D17DCDC45F...
10/11/2021

DOCUMENT NOT CONSIDERED FINAL UNLESS ALL SIGNATURES COMPLETED

CONTRACT STANDARDS AND DEVELOPMENT UNIT
Office 919-707-6950 FAX 919-250-4119

SEE PLATE FOR TITLE

ORIGINAL BY: 2002 Std.840.01 DATE:
MODIFIED BY: E.E. WARD DATE: 3-1-02
CHECKED BY: DATE:
FILE SPEC.: s:Special Details/jhowerton/840d02.dgn

10-AUG-2017 10:11
S:\Contracts\Special Details\jhowerton\840d02 Min Depth CB.dgn
jhowerton
AT CSD-292595

COMPUTED BY: WP 12/16/2018 CHECKED BY: DWG 01/02/19	PROJECT NO.	SHEET NO.
	80074	3B-1

STATE OF NORTH CAROLINA
DIVISION OF HIGHWAYS

SUMMARY OF EARTHWORK

CUBIC YARDS

Station to Station	Uncl. Exc. C.Y.	Embank. +% C.Y.	Borrow C.Y.	Waste C.Y.
-L- 4+30.50 TO 23+18.00	1,445	319		1,126
-Y1A- 10+50.00 TO 18+50.00	379	509	130	
-Y1- 10+73.30 TO 20+60.00	395	571	176	
SUB TOTAL	2,219	1,399	306	1,126
WASTE IN LIEU OF BORROW			-306	-306
PROJECT 80074 TOTAL	2,219			820
SAY	2,500			

Approximate quantities only. Unclassified excavation, Fine Grading AND clearing and grubbing will be paid for at the lump sum price for "Grading".

GUARDRAIL SUMMARY

"N" = DISTANCE FROM EDGE OF LANE TO FACE OF GUARDRAIL
TOTAL SHOULDER WIDTH = DISTANCE FROM EDGE OF TRAVEL LANE TO SHOULDER BREAK POINT.
FLARE LENGTH = DISTANCE FROM LAST SECTION OF PARALLEL GUARDRAIL TO END OF GUARDRAIL.
W = TOTAL WIDTH OF FLARE FROM BEGINNING OF TAPER TO END OF GUARDRAIL
G = GATING IMPACT ATTENUATOR TYPE 350
NG = NON-GATING IMPACT ATTENUATOR TYPE 350

LINE	BEG. STA.	END STA.	LOC.	LENGTH (FT.)			WARRANT POINT		"N" DIST.	TOTAL	FLARE LENGTH		W		ANCHORS						IMP. ATTEN. TYPE 350			REMOVE EXISTING	REMARKS
				STRAIGHT	SHOP CURVED	DOUBLE FACED	APPR. END	TRAIL. END	FROM E.O.L.	SHLDR WIDTH	APPR. END	TRAIL. END	APPR. END	TRAIL. END	CAT-1	GREU TL-2					EA	G	NG	GUARDRAIL	
80074																									
-L-	4+30.50	7+73.98	RT																					350'	REMOVE TO WIDEN ROAD
-L-	4+30.50	7+93.00	RT	362.50					10'	13'					1										
-Y1A-, -L-	16+61.64	17+66.77	RT	362.50	62.50		17+36.64		2'-4'		50'		1.0'		1	1									FILL SLOPE WARRANT
			TOTALS	**725.00**	**62.50**										**2**	**1**									
		ESS DEDUCTIONS FOR ANCHOR																							
		CAT-1 2 @ 6.25 =		-12.50																					
		GREU-TL-2 @ 25 =		-25.00																					
		PROJECT TOTALS		687.50'	62.50'										**2**	**1**								350	
5 ADDITIONAL GUARDRAIL POSTS			SAY	**700.00'**	**75.00'**																			**350**	

4/04/06

COMPUTED BY: TDO DATE: 12-21-18
CHECKED BY: AMH DATE: 11-04-19

PROJECT REFERENCE NO.	SHEET NO.
80074	3D-1

STATE OF NORTH CAROLINA
DIVISION OF HIGHWAYS

NOTE: Invert Elevations are for Bid Purposes only and shall not be used for project construction stakeout. See "Standard Specifications For Roads and Structures, Section 300-5".

SUB-REGIONAL & REGIONAL

LIST OF PIPES, ENDWALLS, ETC. (FOR PIPES 48" & UNDER)

STATION	LOCATION (LT,RT, OR CL)	STRUCTURE NO. FROM.	STRUCTURE NO. TO	TOP ELEVATION	INVERT ELEVATION	INVERT ELEVATION	SLOPE CRITICAL
SIZE							
THICKNESS OR GAUGE							
21+54 -L-	RT	0411		276.8	274.3		
		0411	0412		274.3	274.1	
21+54 -L-	RT	0412		277.1	274.1		
		0412	0408		274.1	273.6	X
14+00 -L-	RT	0414		286.1	283.3		
		0414	0415		283.3	283.0	
14+23 -L-	RT	0415		288.2	283.0		
		0415	0418		283.0	281.6	
18+60 -Y1A-	RT	0418		286.8	281.6		
					281.6		
14+50 -Y1-	LT	1311		293.7	290.7		
		1311	1310		290.7	290.6	
14+50 -Y1-	LT	1310		295.1	290.6		
		1310	0427		290.6	289.0	
12+70 -Y1-	LT	0427		292.7	289.0		
		0427	0426		289.0	288.0	
12+00 -Y1-	LT	0426		291.8	288.0		
		0426	0421		288.0	286.8	X
11+18 -Y1-	LT	0421		289.8	286.0		
		0421	0423		286.0	285.6	
11+11 -Y1-	RT	0423		291.0	285.6		
11+55 -Y1-	LT	0420		291.3	287.0		
		0420	0422		287.0	286.1	
11+19 -Y1-	LT	0422		290.6	286.1		
		0422	0421		286.1	286.0	
12+40 -Y1-	RT	0429		294.3	291.1		
		0429	0425		291.1	290.0	
12+00 -Y1-	RT	0425		293.2	290.0		
		0425	0428		290.0	288.5	
11+50 -Y1-	RT	0428		291.8	288.5		
		0428	0423		288.5	286.4	
17+00 -L-	LT	0430		287.6	284.6		
		0430	0432		284.6	283.3	
16+80 -L-	LT	0432		287.8	283.3		
		0432	0431		283.3	281.0	
SHEET TOTALS							

| DRAINAGE PIPE (RCP, CSP, CAAP, HDPE, or PVC) | | | | | | |

4/04/06

COMPUTED BY: TDO DATE: 12-21-18
CHECKED BY: AMH DATE: 11-04-19

PROJECT REFERENCE NO.	SHEET NO.
80074	3D-2

STATE OF NORTH CAROLINA
DIVISION OF HIGHWAYS

NOTE: Invert Elevations are for Bid Purposes only and shall not be used for project construction stakeout. See "Standard Specifications For Roads and Structures, Section 300-5".

SUB-REGIONAL & REGIONAL

LIST OF PIPES, ENDWALLS, ETC. (FOR PIPES 48" & UNDER)

STATION	LOCATION (LT,RT, OR CL)	STRUCTURE NO. FROM.	STRUCTURE NO. TO	TOP ELEVATION	INVERT ELEVATION	INVERT ELEVATION	SLOPE CRITICAL	DRAINAGE PIPE (RCP, CSP, CAAP, HDPE, or PVC) SIZE	12"	15"	18"	24"	30"	36"	42"	48"	DO NOT USE RCP	DO NOT USE CSP	DO NOT USE CAAP	DO NOT USE HDPE
								THICKNESS OR GAUGE												
6+42 -L-	RT	1102			278.9															
		1102	1103		278.9	275.0														
15+85 -Y1A-	LT	1203		277.9	273.9															
		1203	1201		273.9	273.7				16								X	X	
15+77 -Y1A-	LT	1201		277.2	273.4															
		1201	1202		273.4	269.6														
14+65 -Y1A-	LT																			
14+46 -Y1A-	LT	1202		273.3	269.6															
		1202	1206		269.6	269.3														
14+39 -Y1A-	LT																			
14+00 -Y1A-	LT	1206		273.2	269.3															
		1206	1207		269.3	267.2														
13+15 -Y1A-	LT	1207		270.9	267.2															
		1207	1208		267.2	265.4														
12+50 -Y1A-	LT	1208		268.49	265.4															
		1208	1209		265.4	265.3														
20+10 -Y1-	RT	1302		307.0	304.3															
		1302	1303		304.3	300.0														
18+83 -Y1-	RT	1303		304.5	300.0															
10+61 -L-	RT	1110			285.6	286.5														
16+90 -L-	LT	0402			282.1															
		0402	0403		282.1	281.7														
17+15 -L-	LT	0403		285.4	281.3															
		0403	0405		281.3	280.9														
17+15 -L-	RT	0405		286.1	280.9															
19+25 -L-	CL	0409		282.9	279.4															
		0409	0406		279.4	279.0														
19+47 -L-	CL	0406		282.5	279.0															
		0406	0407		279.0	274.5														
21+53 -L-	CL	0407		277.3	274.5															
SHEET TOTALS										16										
PROJECT TOTALS										140		12								

C.S. PIPE (CLASS I, II, III)	12"	15"	18"	24"	36"	42"	48"	15" SIDE DRAIN PIPE	18" SIDE DRAIN PIPE
	.064	.064	.064	.064	.079	.109	.109		

DocuSign Envelope ID: 03524335-07C1-4967-90EC-BD6A423A65FC

8/17/99

-L-	-Y1-	-Y1A-
PI Sta 27+34.76	PI Sta 13+27.21	PI Sta 15+86.74
Δ = 18° 58' 02.4" (RT)	Δ = 31° 35' 40.3" (LT)	Δ = 32° 08' 16.6" (LT)
D = 1° 00' 00.0"	D = 8° 48' 53.0"	D = 14° 19' 26.2"
L = 1,896.73'	L = 358.43'	L = 224.37'
T = 957.12'	T = 183.90'	T = 115.22'
R = 5,729.58'	R = 650.00'	R = 400.00'
SE = EXIST.	SE = SEE PLANS	SE = EXIST.

NAD 83/NA 2011

PROJECT REFERENCE NO.	SHEET NO.
80074	4
R/W SHEET NO.	W-5704A&B 4

ROADWAY DESIGN ENGINEER — NORTH CAROLINA PROFESSIONAL ENGINEER SEAL 32606 BENJAMIN R CRANE — Signed by: Benjamin R Crane 41DC883E3864B4... — 10/11/2021

HYDRAULICS ENGINEER — NORTH CAROLINA PROFESSIONAL ENGINEER SEAL 35621 ANDREW M HOWELL — Signed by: Andrew M Howell 28ADF9424DE046... — 10/11/2021

DOCUMENT NOT CONSIDERED FINAL UNLESS ALL SIGNATURES COMPLETED

SEPI Engineering & Construction, Inc.
1 Glenwood Avenue
Raleigh, NC 27603
Tel:919.789.9977
Fax:919.789.9591
License: C-2197

MATCHLINE -Y1- STA. 14+00.00 SEE SHEET 4C

MATCHLINE -L STA. 11+00.00 SEE SHEET 4A

MATCHLINE -Y1A- STA. 16+50.00 SEE SHEET 4B

EXECUTIVE DRIVE

ENTERPRISE DRIVE

7 PECO TIRE STORE-CLAYTON, LLC
DB 4740 PG 928
MB 65 PG 232

8 WELLS FARGO
DB 2637 PG 945
MB 62 PG 450

5 BARKER FAMILY PROPERTIES, LLLP
DB 3716 PG 155
MB 48 PG 214
MB 49 PG 371

UNITED ENERGY, INC.
DB 1589 PG 800
MB 49 PG 371

2 M. CLAYTON REALTY ASSOCIATES, LLC
DB 3985 PG 784
MB 56 PG 54

A PNC BANK NA
DB 2030 PG 69

Forthlink Business LLC

-Y1- PC Sta. 11+43.31

BEGIN 2'-6" C&G -L- STA.14+41.12 LT.

BEGIN 2'-6" C&G -L- STA.13+50.74 RT.

BEGIN 5' SIDEWALK -Y1- STA.11+80.00 RT.

-L- POT Sta. 15+57.73

-Y1- POT Sta. 10+00.00

END 2'-6" C&G -L- STA.17+24.87 LT.

END PROPOSED WIDENING -L- STA.23+18.00

SEE INSET

DO NOT DISTURB CVS SIGN

-Y1A- PT Sta. 16+95.89

BEGIN EXPRESSWAY GUTTER TIE TO EXISTING 2'-6" C & G -L- STA.18+73.04 RT.

END EXPRESSWAY GUTTER TIE TO EXISTING 2'-6" C & G -L- STA.22+19.92 RT.

-L- PC Sta. 17+77.63

END 2'-6" C&G -L- STA.16+14.80 RT.

-L- POT Sta.15+40.43

-Y1A- POT Sta. 19+24.50

CL 'B' RIP RAP (043) EST. 2 TONS EST. 7 SYGF

CLASS B RIP RAP EST 3 TONS EST 10 SYGF

FALSE SUMP SEE DETAIL 1

SPECIAL CUT 'V' DITCH SEE DETAIL 3

100' MEDIAN TAPER

100' TAPER

150' FULL LANE

600' LANE TRANSITION

435' FULL LANE

350' FULL LANE

150' TAPER

DETAIL 1
FALSE SUMP
(Not to Scale)

Median Ditch — 9" — 2' — L (See Chart Below) — 20' — GI etc. — S

S=Ditch Slope — ℄ Proposed Ditch

Ditch Grade	L	Ditch Grade	L
0.0% To 2.0%	20'	Over 4.0% To 6.0%	40'
Over 2.0% To 4.0%	30'	Over 6.0%	50'

FROM STA. 21+57 TO STA. 21+97 -L- MED

DETAIL 3
SPECIAL CUT DITCH
(Not to Scale)

Natural Ground — 4:1 — D — 4:1 or flatter — Front Ditch Slope — Min. D=1.0 Ft.

FROM STA. 11+50 TO STA. 14+00 -L- RT

INSET

R 70'

R 2.5'

15+00

GRASS

+19.50

+44.32

+71.89

NTS

SEE SHEET 5 & 6 FOR -L- PROFILE
SEE SHEET 7 FOR -Y1A- & -Y1- PROFILE

10/14/2021
W-5704A&B_Rdy_psh_4.dgn
USER:rdelaney

DocuSign Envelope ID: 03524335-07C1-4967-90EC-BD6A423A65FC

8/17/99

PROJECT REFERENCE NO.	SHEET NO.
80074	4A
R/W SHEET NO.	W-5704B 4A

ROADWAY DESIGN ENGINEER
NORTH CAROLINA PROFESSIONAL ENGINEER SEAL 32606 BENJAMIN R CRAWFORD
10/11/2021

HYDRAULICS ENGINEER
NORTH CAROLINA PROFESSIONAL ENGINEER SEAL 35621 ANDREW M HOWELL
10/11/2021

DOCUMENT NOT CONSIDERED FINAL UNLESS ALL SIGNATURES COMPLETED

SEPI Engineering & Construction, Inc.
1 Glenwood Avenue
Raleigh, NC 27603
Tel:919.789.9977
Fax:919.789.9591
License: C-2197

NAD 83/NA 2011

DETAIL 4
SPECIAL CUT DITCH
(Not to Scale)

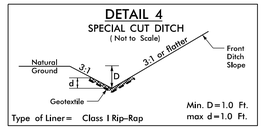

Type of Liner= Class I Rip-Rap
Min. D=1.0 Ft.
max d=1.0 Ft.

FROM STA. 6+66 TO STA. 7+50 -L- RT

DETAIL 3
SPECIAL CUT DITCH
(Not to Scale)

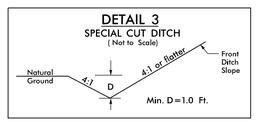

Min. D=1.0 Ft.

FROM STA. 7+50 TO STA. 10+29 -L- RT

	NORTH	EAST	ELEV.
CUL1	695141.00	2153723.81	261.40
CUL2	695138.39	2153728.66	261.42
CE1	695139.15	2153726.60	270.42
HW1	695139.44	2153726.47	272.11
CUL3	694979.87	2153683.32	259.45
CUL4	694976.85	2153688.88	259.45
CE2	694978.95	2153685.69	268.46
HW2	694978.76	2153685.57	270.14

CULVERT #1
ONE BARREL

-L- POT Sta. 0+00.00

BEGIN PROPOSED WIDENING
-L- STA.4+30.50

STALLINGS MILL APARTMENTS, LLC
DB 4424 PG 368
MB 69 PG 144
MB 84 PG 241

-L- US 70 BUS.

TIE TO EXISTING GUARDRAIL
-L- STA.4+30.50 RT.

MATCHLINE -L- STA. 11+00.00
SEE SHEET 4

SEE SHEET 5 FOR -L- PROFILE

JAMES W. CASH
DB 552 PG 347

TEDDY FOSTER BEDDINGFIELD
DB 528 PG 427
DB 895 PG 538

SHOTWELL 70 PARTNERS, LLC & CONWAY CENTRE, LLC
DB 3616 PG 920
MB 77 PG 495-496
MB 50 PG 160

HEALTH PROPERTIES INVESTMENTS, INC.
DB 4286 PG 499
MB 77 PG 495-496

1 SHOTWELL 70 PARTNERS, LLC & CONWAY CENTRE, LLC
DB 3616 PG 920
DB 1933 PG 754
MB 77 PG 495-496
MB 69 PG 144
MB 56 PG 54

3 BALDIES RESTAURANT GROUP, LLC
DB 4359 PG 113
PB 77 PG 495
PB 77 PG 496

Earthlink Business LLC

INSET

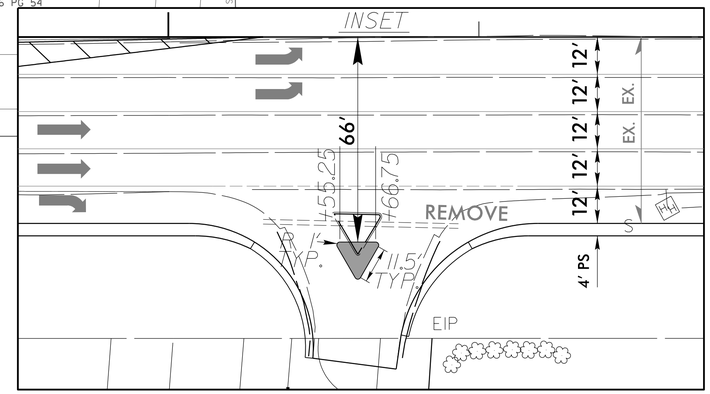

10/11/2021 10:44:08 AM
USER:rdail
C:\Projects\80074\08_Rdy_psh_4a.dgn

DocuSign Envelope ID: 03524335-07C1-4967-90EC-BD6A423A65FC

PROJECT REFERENCE NO.	SHEET NO.
80074	4B
R/W SHEET NO.	W-5704B 4B

ROADWAY DESIGN ENGINEER	HYDRAULICS ENGINEER
NORTH CAROLINA PROFESSIONAL SEAL 32606 ENGINEER BENJAMIN R. CRAWFORD	NORTH CAROLINA PROFESSIONAL SEAL 35621 ENGINEER ANDREW M. HOWELL
Designed by: Benjamin R Crawford 41DA29B3E39E4E4...	Designed by: Andrew M Howell 26ADF9424DE046A...
10/11/2021	10/11/2021

DOCUMENT NOT CONSIDERED FINAL UNLESS ALL SIGNATURES COMPLETED

SEPI Engineering & Construction, Inc.
1 Glenwood Avenue
Raleigh, NC 27603
Tel:919.789.9977
Fax:919.789.9591
License: C-2197

-Y1A-	
PI Sta 12+36.87	PI Sta 15+86.74
△ = 67° 38' 52.1" (RT)	△ = 32° 08' 16.6" (LT)
D = 17° 37' 46.1"	D = 14° 19' 26.2"
L = 383.72'	L = 224.37'
T = 217.76'	T = 115.22'
R = 325.00'	R = 400.00'

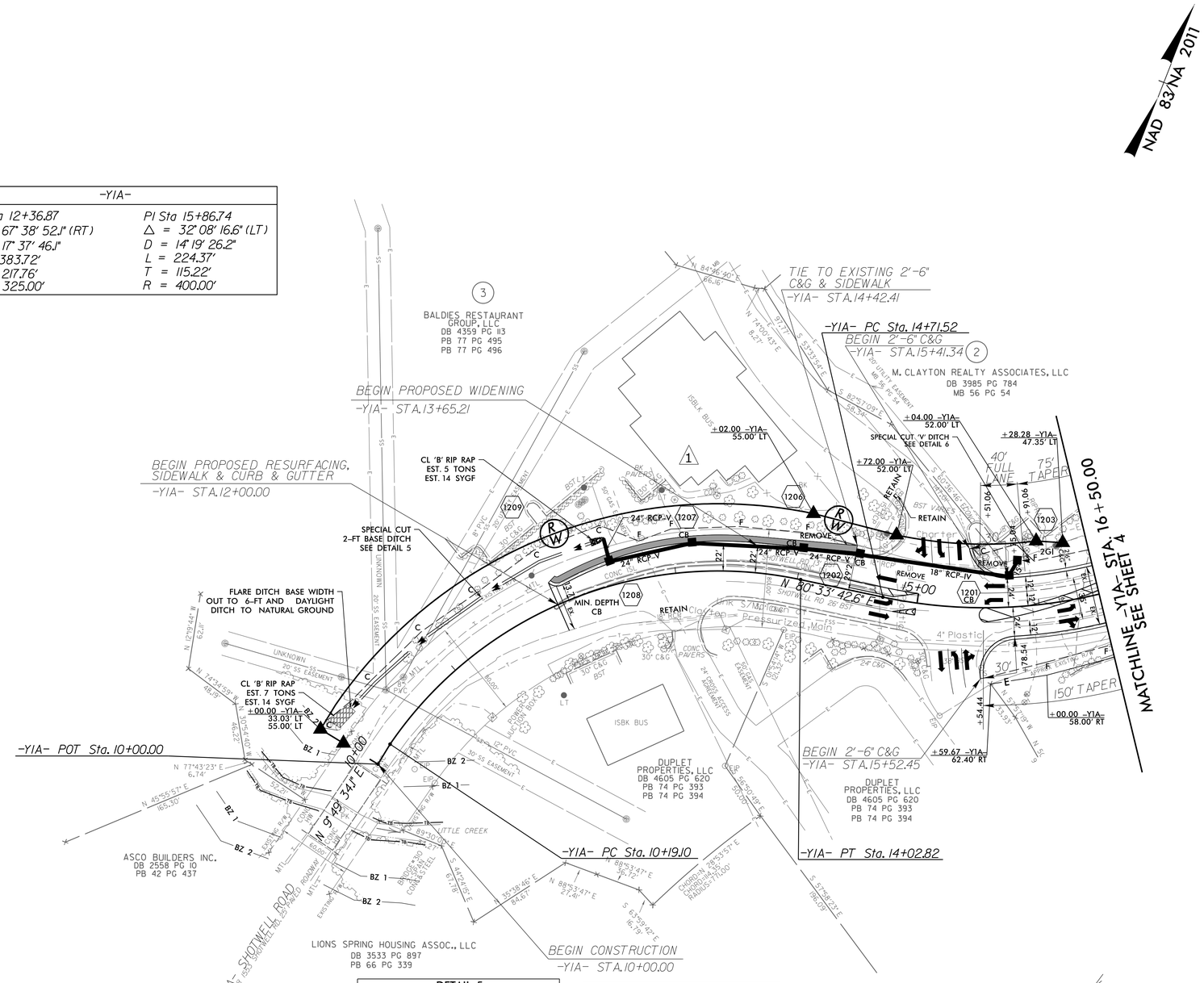

SEE SHEET 7 FOR -Y1A- PROFILE

8/17/99

10/11/2021
...\W-5704A&B_Rdy_psh_4b.dgn
USER:default

DocuSign Envelope ID: 03524335-07C1-4967-90EC-BD6A423A65FC

8/17/99

PROJECT REFERENCE NO.	SHEET NO.
80074	4C
R/W SHEET NO.	W-5704B 4C

ROADWAY DESIGN ENGINEER
NORTH CAROLINA PROFESSIONAL SEAL 32606 ENGINEER BENJAMIN R CRAWFORD
Benjamin R Crawford
41DAC983E39E4B4...
10/11/2021

HYDRAULICS ENGINEER
NORTH CAROLINA PROFESSIONAL SEAL 35621 ENGINEER ANDREW M NOWELL
Andrew M Nowell
28ADF942ADED46A...
10/11/2021

DOCUMENT NOT CONSIDERED FINAL UNLESS ALL SIGNATURES COMPLETED

SEPI Engineering & Construction, Inc.
1 Glenwood Avenue
Raleigh, NC 27603
Tel:919.789.9977
Fax:919.789.9591
License: C-2197

NAD 83/NA 2011

-Y1- POT Sta. 24+69.12

MATCHLINE -Y1- STA. 14+00.00 SEE SHEET 4

6
TRIARC FOOD SYSTEMS INC. 23
DB 1348 PG 626
MB 48 PG 214
MB 49 PG 371

STALLINGS MILL APARTMENTS, LLC
DB 4424 PG 368
MB 69 PG 144
MB 84 PG 241

20' PUBLIC UTILITY EASEMENT MB 84 PG 241

VARIABLE WIDTH PUBLIC UTILITY EASEMENT MB 84 PG 241

N 37°45'30" E 108.93'

-Y1- PC Sta. 16+47.93

-Y1- PT Sta. 15+01.74

TIE TO EXIST. 2'-6" C&G
-Y1- STA. 20+31.58

END CONSTRUCTION
-Y1- STA. 20+60.00

33.75' INC.

REMOVE JB AND 6 LF OF 15" RCP — REPLACE w/ MIN. DEPTH CB

RETAIN

Century Link Marker

N 6° 54' 41.7" E

LEE BROTHERS RENTAL
DB 3344 PG 564
MB 84 PG 113

EXISTING R/W

100' TAPER

100' FULL LANE

46.5' INC TYP

MTL UNDER CONSTRUCTION

TIE TO EXIST. 2'-6" C&G

TIE PROPOSED CATCH BASIN TO EXISTING SITE DRAINAGE INSTALLED DURING DEVELOPMENT OF PARCEL #9 "LA COCINA #3, INC"

-Y1- PC Sta. 19+82.10

-Y1- PT Sta. 18+24.94

-Y1- PT Sta. 22+69.12

7
PECO TIRE STORE-CLAYTON, LLC
DB 4740 PG 928
MB 65 PG 232

9
LA COCINA #3, INC.
DB 5113 PG 589
MB 83 PG 470

TREE HOUSE PROPERTIES, LLC
DB 3358 PG 947
MB 70 PG 184

20' DRAINAGE EASEMENT MB 65 PG 232

NON-EXCLUSIVE SEWER EASEMENT MB 83 PG 470

20' UTILITY EASEMENT MB 70 PG 184

SR 1553 SHOTWELL RD VARIES

SR 1553 SHOTWELL RD 37.5' BST

SR 1553 SHOTWELL RD 30.5' BST

Unk. S/M, Town of Clayton

Found 4" Pinched Top

Century Link Marker

-Y1-	
PI Sta 17+36.45	PI Sta 21+26.10
△ = 2° 01' 42.5" (RT)	△ = 11° 32' 24.5" (RT)
D = 1° 08' 45.3"	D = 4° 01' 14.7"
L = 177.02'	L = 287.01'
T = 88.52'	T = 143.99'
R = 5,000.00'	R = 1,425.00'
SE = SEE PLANS	SE = SEE PLANS

NOTE:

PARCEL #9 "LA COCINA #3, INC." WAS UNDER CONSTRUCTION AT THE TIME OF ROADWAY PLAN DEVELOPMENT. FIELD SURVEYS WERE COMPLETED PRIOR TO SITE GRADING AND INSTALLATION OF DRAINAGE INFRASTRUCTURE. SITE PLANS HAVE BEEN REVIEWED IN ORDER TO COORDINATE ROADWAY AND DRAINAGE DESIGN FOR THE 80074 PROJECT.

NEWLY INSTALLED PIPED DRAINAGE INFRASTRUCTURE ON PARCEL #9 WILL SERVE AS THE DRAINAGE OUTLET FOR THE ROADWAY DRAINAGE SYSTEM LEAVING THE RIGHT-OF-WAY AT PROPOSED STRUCTURE 1303. THE INVERT ELEVATION FOR STRUCTURE 1303 IS BASED ON SITE DEVELOPMENT PLANS BY OTHERS, AND SHOULD BE VERIFIED PRIOR TO CONSTRUCTION.

SEE SHEET 7 FOR -Y1- PROFILE

10/W_5704A&B_Rdy_psh_4c.dgn
USER:Bridget

DocuSign Envelope ID: B47CAD2D-9406-463F-AC11-2251AA98B10E

PROJECT REFERENCE NO.	SHEET NO.
80074	5

ROADWAY DESIGN ENGINEER
NORTH CAROLINA PROFESSIONAL SEAL 32606 ENGINEER BENJAMIN R. CRAWFORD
Delegated by: Benjamin R. Crawford
DAC9B3E39E4B4...
10/8/2021

HYDRAULICS ENGINEER
NORTH CAROLINA PROFESSIONAL SEAL 35621 ENGINEER ANDREW M. HOWELL
Delegated by: Andrew M. Howell
28ADF9424DE046A...
10/8/2021

DOCUMENT NOT CONSIDERED FINAL UNLESS ALL SIGNATURES COMPLETED

SEPI Engineering & Construction, Inc.
1 Glenwood Avenue
Raleigh, NC 27603
Tel:919.789.9977
Fax:919.789.9591
License: C-2197

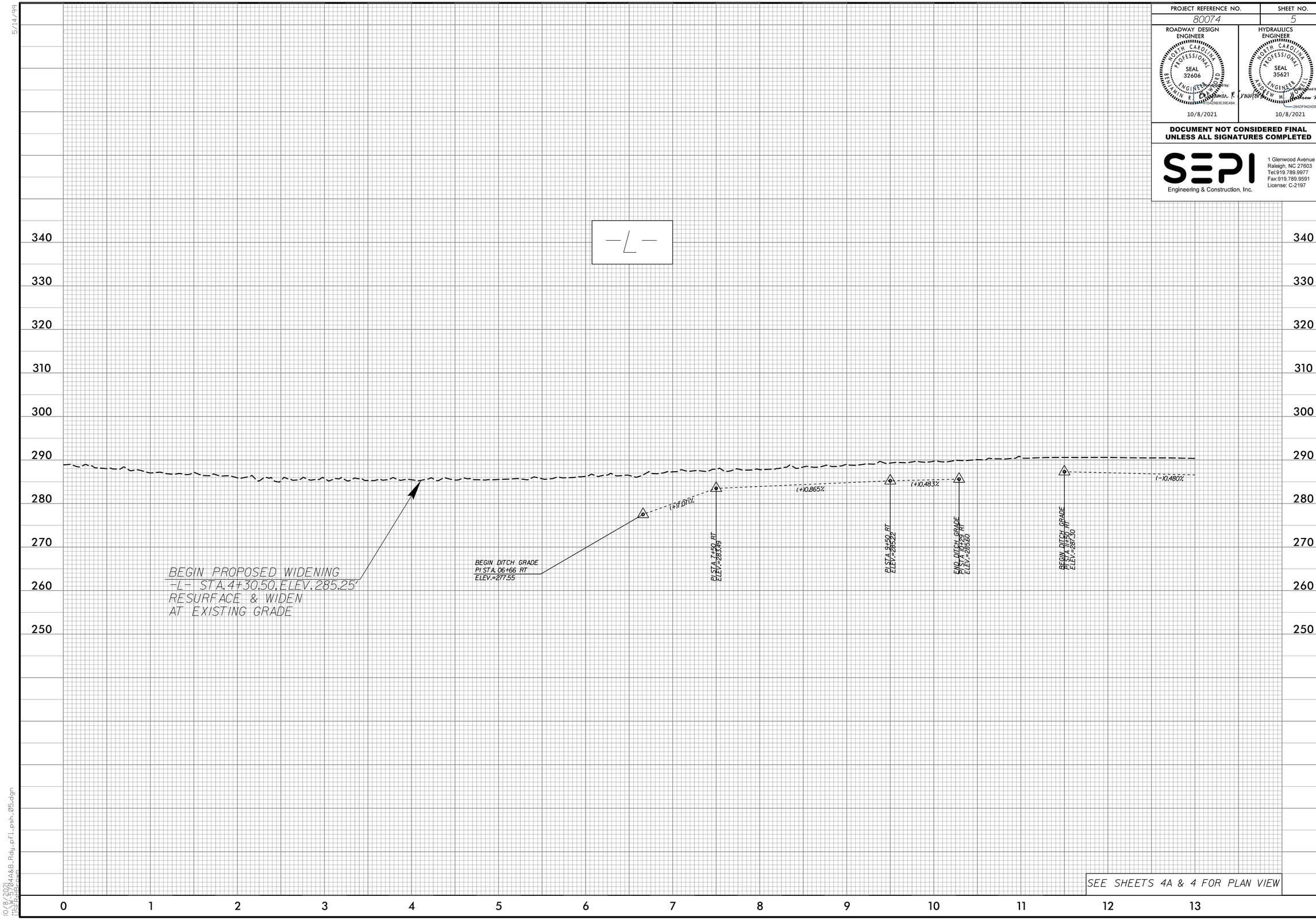

5/14/99

10/8/2021
...\W-5704A&B_Rdy_pfl_psh_05.dgn
USER:HBrown

DocuSign Envelope ID: B47CAD2D-9406-463F-AC11-2251AA98B10E

PROJECT REFERENCE NO.	SHEET NO.
80074	6

ROADWAY DESIGN ENGINEER
NORTH CAROLINA PROFESSIONAL SEAL 32606 ENGINEER BENJAMIN R. CRAWFORD
Digitally signed by: Benjamin R. Crawford 41DA29B3E39E4BB...
10/8/2021

HYDRAULICS ENGINEER
NORTH CAROLINA PROFESSIONAL SEAL 35621 ENGINEER ANDREW M. HOWELL
Digitally signed by: Andrew M. Howell 28ADF9424DE046A...
10/8/2021

DOCUMENT NOT CONSIDERED FINAL UNLESS ALL SIGNATURES COMPLETED

SEPI Engineering & Construction, Inc.
1 Glenwood Avenue
Raleigh, NC 27603
Tel:919.789.9977
Fax:919.789.9591
License: C-2197

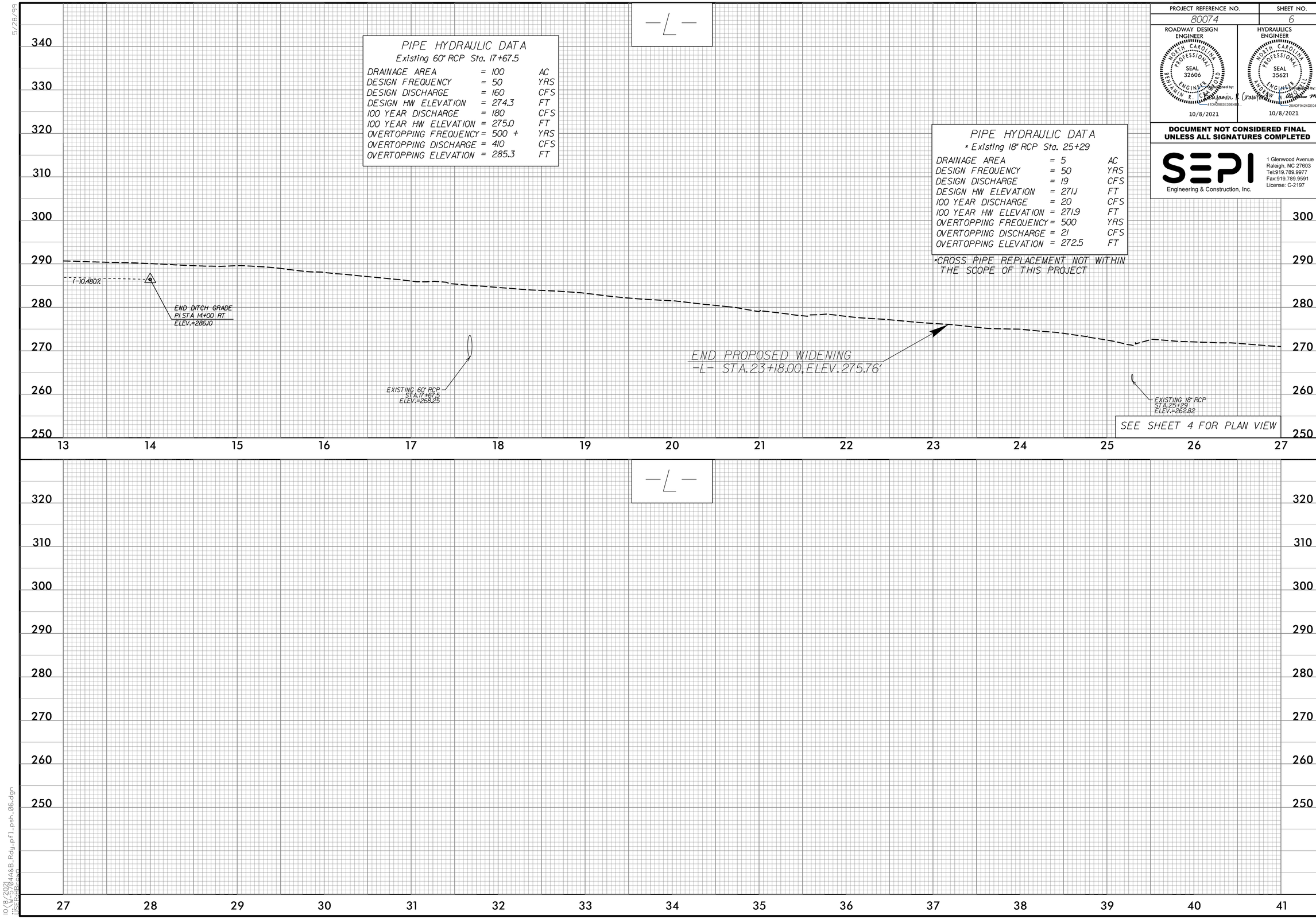

5/28/99

10/8/2021
...\W-5704A&B_Rdy_pfl_psh_06.dgn
USER:HBrown

DocuSign Envelope ID: B47CAD2D-9406-463F-AC11-2251AA98B10E

5/28/99

-Y1A-

PROJECT REFERENCE NO.	SHEET NO.
80074	7

ROADWAY DESIGN ENGINEER — NORTH CAROLINA PROFESSIONAL SEAL 32606 ENGINEER — Signed by: Benjamin R. [illegible] 410A29B3E39E484... — 10/8/2021

HYDRAULICS ENGINEER — NORTH CAROLINA PROFESSIONAL SEAL 35621 ENGINEER — Signed by: Andrew M Howell 28ADF9424DE046... — 10/8/2021

DOCUMENT NOT CONSIDERED FINAL UNLESS ALL SIGNATURES COMPLETED

SEPI Engineering & Construction, Inc.
1 Glenwood Avenue
Raleigh, NC 27603
Tel:919.789.9977
Fax:919.789.9591
License: C-2197

BEGIN PROPOSED WIDENING
-Y1A- STA.13+65.21, ELEV.289.95'
RESURFACE & WIDEN
AT EXISTING GRADE

BEGIN PROPOSED RESURFACING,
SIDEWALK,& CURB & GUTTER
-Y1A- STA.12+00.00, ELEV.265.79'

END PROPOSED RESURFACING,CURB &
GUTTER,& WIDENING
-Y1A- STA.18+50.00, ELEV.288.58'

BEGIN DITCH GRADE
PI STA 10+10 LT
ELEV.=259.60

PI STA 10+50 LT
ELEV.=260.10

PI STA 11+50 LT
ELEV.=263.23

(+)1.258%

(+)3.130%

(+)2.085%

END DITCH GRADE
PI STA 12+50 LT
ELEV.=265.32

PROPOSED 15" RCP
STA.18+43
ELEV.=282.1

END PROPOSED SIDEWALK
TIE TO EXISTING SIDEWALK
-Y1A- STA.14+42.40, ELEV.273.49'

PIPE HYDRAULIC DATA
Proposed 15" RCP-IV Sta.18+43

DRAINAGE AREA	= 0.5	AC
DESIGN FREQUENCY	= 25	YRS
DESIGN DISCHARGE	= 2.6	CFS
DESIGN HW ELEVATION	= 283.9	FT
100 YEAR DISCHARGE	= 3.0	CFS
100 YEAR HW ELEVATION	= 284.2	FT
OVERTOPPING FREQUENCY	= 500+	YRS
OVERTOPPING DISCHARGE	= 11	CFS
OVERTOPPING ELEVATION	= 288.1	FT

SEE SHEETS 4B & 4 FOR PLAN VIEW

-Y1-

BEGIN PROPOSED RESURFACING
& CURB & GUTTER
-Y1- STA.10+51.44, ELEV.289.63'

PI = 14+82.34
EL = 297.89'
VC = 55'
K = 173
DS = 50 MPH

PI = 15+70.00
EL = 299.02'
VC = 105'
K = 142
DS = 55 MPH

PI = 16+75.00
EL = 301.15'
VC = 85'
K = 221
DS = 55 MPH

PI = 17+87.50
EL = 303.00'
VC = 80'
K = 129
DS = 50 MPH

PI = 19+00.00
EL = 305.55'
VC = 30'
K = 81
DS = 40 MPH

(+)1.6079%

(+)1.2891%

(+)2.0286%

(+)1.6444%

(+)2.2667%

(+)2.6369%

END PROPOSED GRADE,
SIDEWALK,& CURB & GUTTER
-Y1- STA.20+60.00, ELEV.309.77'
MILLING REQUIRED FOR TIE IN

BEGIN PROPOSED SIDEWALK
-Y1- STA.11+79.59, ELEV.292.94'

END PROPOSED RESURFACING
BEGIN PROPOSED GRADE
-Y1- STA.14+82.34, ELEV.297.87'

PROPOSED 24" RCP
STA.11+12
ELEV.=285.7

PIPE HYDRAULIC DATA
Proposed 24" RCP-V Sta.11+12

DRAINAGE AREA	= 3.5	AC
DESIGN FREQUENCY	= 25	YRS
DESIGN DISCHARGE	= 19	CFS
DESIGN HW ELEVATION	= 288.9	FT
100 YEAR DISCHARGE	= 22	CFS
100 YEAR HW ELEVATION	= 289.4	FT
OVERTOPPING FREQUENCY	= 500+	YRS
OVERTOPPING DISCHARGE	= 26	CFS
OVERTOPPING ELEVATION	= 290.0	FT

SEE SHEETS 4 & 4C FOR PLAN VIEW

10/8/2021 10:48:8 Rdy_pf1_psh_07.dgn
USER:kcrawford

DocuSign Envelope ID: 278855FF-A3B0-4920-89E1-FE8FCA5403B6

STATE OF NORTH CAROLINA
DIVISION OF HIGHWAYS

TRANSPORTATION MANAGEMENT PLAN

JOHNSTON COUNTY

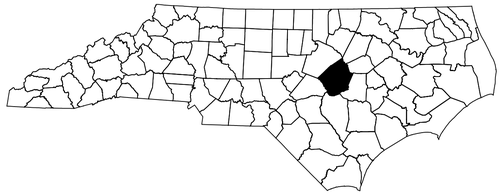

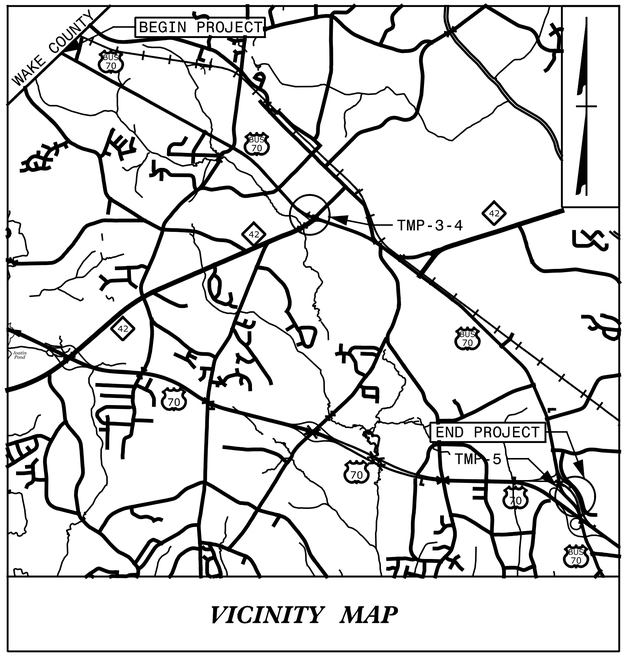

VICINITY MAP

LOCATION: US 70 BUSINESS AT SR 1553 (SHOTWELL ROAD)

TYPE OF WORK: GRADING, DRAINAGE, PAVING, SIGNAL, AND PAVEMENT MARKING

INDEX OF SHEETS

SHEET NO.	TITLE
TMP-1	TITLE SHEET, VICINITY MAP, AND INDEX OF SHEETS
TMP-1A	LIST OF APPLICABLE ROADWAY STANDARD DRAWINGS AND LEGEND
TMP-1B	TRANSPORTATION OPERATIONS PLAN: (MANAGEMENT STRATEGIES, GENERAL NOTES, AND PHASING)
TMP-2-3	PHASE I

SHEET NO.
TMP–1

PROJECT: 80074



WORK ZONE SAFETY & MOBILITY
"from the MOUNTAINS to the COAST"

PLANS PREPARED BY:

JOHN BAUMAN, P.E.

STEVE MILLER, P.E.

NCDOT CONTACTS:

KENNETH C. THORNEWELL, P.E.
PROJECT ENGINEER

SPENCER B. JENNINGS
PROJECT DESIGN ENGINEER

DIVISION OF HIGHWAYS * STATE OF NORTH CAROLINA * DEPARTMENT OF TRANSPORTATION * WORK ZONE TRAFFIC CONTROL

DOCUMENT NOT CONSIDERED FINAL UNLESS ALL SIGNATURES COMPLETED

SEPI Engineering & Construction, Inc.
1 Glenwood Avenue
Raleigh, NC 27603
Tel:919.789.9977
Fax:919.789.9591
License: C-2197

APPROVED: DocuSigned by: Steve Miller 9FBC6C15CEEB486...

DATE: 10/8/2021

SEAL

NORTH CAROLINA PROFESSIONAL SEAL 037026 ENGINEER STEVEN D. MILLER

10/8/2021
X:\2019\SEI\49.01\WBS 80074 ShotwellRoad and US 70\TP\Traffic\TMP\W-5704 TMP-1.dgn
JBauman

DocuSign Envelope ID: 278855FF-A3B0-4920-89E1-FE8FCA5403B6

PROJ. REFERENCE NO.	SHEET NO.
80074	TMP-1A

ROADWAY STANDARD DRAWINGS

THE FOLLOWING ROADWAY STANDARDS AS SHOWN IN "ROADWAY STANDARD DRAWINGS" - PROJECT SERVICES UNIT - N.C. DEPARTMENT OF TRANSPORTATION - RALEIGH, N.C., DATED JANUARY 2018 ARE APPLICABLE TO THIS PROJECT AND BY REFERENCE HEREBY ARE CONSIDERED A PART OF THESE PLANS:

STD. NO.	TITLE
1101.01	WORK ZONE ADVANCE WARNING SIGNS
1101.02	TEMPORARY LANE CLOSURES
1101.04	TEMPORARY SHOULDER CLOSURES
1101.11	TRAFFIC CONTROL DESIGN TABLES
1110.01	STATIONARY WORK ZONE SIGNS
1110.02	PORTABLE WORK ZONE SIGNS
1115.01	FLASHING ARROW BOARDS
1130.01	DRUMS
1135.01	CONES
1145.01	BARRICADES - TYPE III
1150.01	FLAGGERS
1165.01	TRUCK MOUNTED ATTENUATOR
1180.01	SKINNY - DRUM

LEGEND

GENERAL

- DIRECTION OF TRAFFIC FLOW
- DIRECTION OF PEDESTRIAN TRAFFIC FLOW
- EXIST. PVMT.
- NORTH ARROW
- PROPOSED PVMT.
- TEMP. SHORING (LOCATION PURPOSES ONLY)
- WORK AREA
- REMOVAL
- MILL AND FILL OPERATION
- USER DEFINED (IF NEEDED)

SIGNALS

EXISTING PROPOSED TEMPORARY

PAVEMENT MARKINGS

- EXISTING LINES
- TEMPORARY LINES

TRAFFIC CONTROL DEVICES

- BARRICADE (TYPE III)
- CONE
- DRUM SKINNY DRUM TUBULAR MARKER
- TEMPORARY CRASH CUSHION
- FLASHING ARROW BOARD
- FLAGGER
- LAW ENFORCEMENT
- TRUCK MOUNTED ATTENUATOR (TMA)
- CHANGEABLE MESSAGE SIGN

TEMPORARY SIGNING

- PORTABLE SIGN
- STATIONARY SIGN
- STATIONARY OR PORTABLE SIGN

PAVEMENT MARKERS

- CRYSTAL/CRYSTAL
- CRYSTAL/RED
- YELLOW/YELLOW

PAVEMENT MARKING SYMBOLS

PAVEMENT MARKING SYMBOLS

SEPI Engineering & Construction, Inc.
1 Glenwood Avenue
Raleigh, NC 27603
Tel:919.789.9977
Fax:919.789.9591
License: C-2197

APPROVED: DocuSigned by: Steve Miller 9FBC6C15CEEB486...

DATE: 10/8/2021

SEAL

NORTH CAROLINA PROFESSIONAL ENGINEER SEAL 037026 STEVEN D. MILLER

DOCUMENT NOT CONSIDERED FINAL UNLESS ALL SIGNATURES COMPLETED

DIVISION OF HIGHWAYS STATE OF NORTH CAROLINA DEPARTMENT OF TRANSPORTATION WORK ZONE TRAFFIC CONTROL

ROADWAY STANDARD DRAWINGS & LEGEND

10/8/2021
X:\2019\SEI9.149.01 WBS 80074 Shotwell Road and US 70\TP\Traffic\TMP\W-5704 TMP-1A.dgn
JBauman

DocuSign Envelope ID: 278855FF-A3B0-4920-89E1-FE8FCA5403B6

PROJ. REFERENCE NO.	SHEET NO.
80074	TMP-1B

MANAGEMENT STRATEGIES

- LOCAL ACCESS TO ALL RESIDENCES AND BUSINESSES WILL BE MAINTAINED BETWEEN CLOSURE POINTS AT ALL TIMES DURING CONSTRUCTION

- TRAFFIC WILL BE MAINTAINED THROUGH CONSTRUCTION WITH THE USE OF LANE CLOSURES

PHASING

STEP 1: USING ROADWAY STANDARD DRAWING (RSD) 1101.01 SHEETS 2 AND 3 OF 3, INSTALL ADVANCE WORK ZONE WARNING SIGNS ON BUS US 70 AND SHOTWELL RD.

STEP 2: USING RSD 1101.02 SHEETS 1 AND 3 OF 14, PLACE DEVICES AS SHOWN ON TMP-2 AND TMP-3 AND BEGIN OPERATION TO CONSTRUCT MEDIAN IMPROVEMENTS ALONG -L- (US 70BUS) AND WIDENING ALONG -L- & SHOTWELL RD, PLACE DEVICES AS SHOWN ON TMP-2 AND TMP-3.

STEP 3: USING RSD 1101.02 SHEET 1 OF 14, ONCE SHOTWELL RD. WIDENING IS COMPLETE, CONSTRUCT MEDIAN IMPROVEMENTS ON -Y1- (SHOTWELL RD) AS SHOWN ON TMP-2 (INSET-A).

STEP 4: COMPLETE CONSTRUCTION AS SHOWN ON TMP-2 AND TMP-3 UP TO, BUT NOT INCLUDING, THE FINAL LAYER OF SURFACE COURSE.

STEP 5: USING RSD 1101.02 SHEETS 11 AND 12 OF 14, COMPELTE MILL AND FILL OPERATION, PLACE FINAL LAYER OF SURFACE COURSE, FINAL PAVEMENT MARKINGS, MARKERS, AND SIGNING AS SHOWN ON THE PAVEMENT MARKING AND SIGNING PLANS AND REMOVE ALL WORK ZONE TRAFFIC CONTROL DEVICES.

GENERAL NOTES

CHANGES MAY BE REQUIRED WHEN PHYSICAL DIMENSIONS IN THE DETAIL DRAWINGS, STANDARD DETAILS, AND ROADWAY DETAILS ARE NOT ATTAINABLE TO MEET FIELD CONDITIONS OR RESULT IN DUPLICATE OR UNDESIRED OVERLAPPING OF DEVICES. MODIFICATION MAY INCLUDE: MOVING, SUPPLEMENTING, COVERING, OR REMOVAL OF DEVICES AS DIRECTED BY THE ENGINEER.

THE FOLLOWING GENERAL NOTES APPLY AT ALL TIMES FOR THE DURATION OF THE CONSTRUCTION PROJECT EXCEPT WHEN OTHERWISE NOTED IN THE PLAN OR DIRECTED BY THE ENGINEER.

TIME RESTRICTIONS

A) DO NOT CLOSE OR NARROW TRAVEL LANES AS FOLLOWS:

ROAD NAME	DAY AND TIME RESTRICTIONS
US BUS 70 & SHOTWELL RD.	MONDAY TO SUNDAY 6:00 A.M. TO 8:30 P.M.

B) DO NOT CLOSE OR NARROW TRAVEL LANES DURING HOLIDAYS AND SPECIAL EVENTS AS FOLLOWS:

ROAD NAME
BUS US 70, AND SHOTWELL RD.

HOLIDAY

1. FOR ANY UNEXPECTED OCCURRENCE THAT CREATES UNUSUALLY HIGH TRAFFIC VOLUMES, AS DIRECTED BY THE ENGINEER.

2. FOR NEW YEAR'S, BETWEEN THE HOURS OF 6:00 A.M. DECEMBER 31ST TO 8:30 P.M. JANUARY 2ND. IF NEW YEAR'S DAY IS ON A FRIDAY, SATURDAY, SUNDAY, OR MONDAY THEN UNTIL 8:30 P.M. THE FOLLOWING TUESDAY.

3. FOR EASTER, BETWEEN THE HOURS OF 6:00 A.M. THURSDAY AND 8:30 P.M. MONDAY.

4. FOR MEMORIAL DAY, BETWEEN THE HOURS OF 6:00 A.M. FRIDAY TO 8:30 P.M. TUESDAY.

5. FOR INDEPENDENCE DAY, BETWEEN THE HOURS OF 6:00 A.M. THE DAY BEFORE INDEPENDENCE DAY AND 8:30 P.M. THE DAY AFTER INDEPENDENCE DAY.

   IF INDEPENDENCE DAY IS ON A FRIDAY, SATURDAY, SUNDAY, OR MONDAY THEN BETWEEN THE HOURS OF 6:00 A.M. THE THURSDAY BEFORE INDEPENDENCE DAY AND 8:30 P.M. THE TUESDAY AFTER INDEPENDENCE DAY.

6. FOR LABOR DAY, BETWEEN THE HOURS OF 6:00 A.M. FRIDAY AND 8:30 P.M. TUESDAY.

7. FOR THANKSGIVING DAY, BETWEEN THE HOURS OF 6:00 A.M. TUESDAY TO 8:30 P.M. MONDAY.

8. FOR CHRISTMAS, BETWEEN THE HOURS OF 6:00 A.M. THE FRIDAY BEFORE THE WEEK OF CHRISTMAS DAY AND 8:30 P.M. THE FOLLOWING TUESDAY AFTER THE WEEK OF CHRISTMAS.

LANE AND SHOULDER CLOSURE REQUIREMENTS

C) REMOVE LANE CLOSURE DEVICES FROM THE LANE WHEN WORK IS NOT BEING PERFORMED BEHIND THE LANE CLOSURE OR WHEN A LANE CLOSURE IS NO LONGER NEEDED OR AS DIRECTED BY THE ENGINEER.

D) WHEN PERSONNEL AND/OR EQUIPMENT ARE WORKING WITHIN 15 FT OF AN OPEN TRAVEL LANE, CLOSE THE NEAREST OPEN SHOULDER USING ROADWAY STANDARD DRAWING NO. 1101.04 UNLESS THE WORK AREA IS PROTECTED BY BARRIER OR GUARDRAIL OR A LANE CLOSURE IS INSTALLED.

E) WHEN PERSONNEL AND/OR EQUIPMENT ARE WORKING ON THE SHOULDER ADJACENT TO AN UNDIVIDED FACILITY AND WITHIN 5 FT OF AN OPEN TRAVEL LANE, CLOSE THE NEAREST OPEN TRAVEL LANE USING ROADWAY STANDARD DRAWING NO. 1101.02 UNLESS THE WORK AREA IS PROTECTED BY BARRIER OR GUARDRAIL.

   WHEN PERSONNEL AND/OR EQUIPMENT ARE WORKING ON THE SHOULDER ADJACENT TO A DIVIDED FACILITY AND WITHIN 10 FT OF AN OPEN TRAVEL LANE, CLOSE THE NEAREST OPEN TRAVEL LANE USING ROADWAY STANDARD DRAWING NO. 1101.02 UNLESS THE WORK AREA IS PROTECTED BY BARRIER OR GUARDRAIL.

F) WHEN PERSONNEL AND/OR EQUIPMENT ARE WORKING WITHIN A LANE OF TRAVEL OF AN UNDIVIDED OR DIVIDED FACILITY, CLOSE THE LANE ACCORDING TO THE TRAFFIC CONTROL PLANS, ROADWAY STANDARD DRAWINGS, OR AS DIRECTED BY THE ENGINEER. CONDUCT THE WORK SO THAT ALL PERSONNEL AND/OR EQUIPMENT REMAIN WITHIN THE CLOSED TRAVEL LANE.

G) DO NOT WORK SIMULTANEOUSLY WITHIN 15 FT ON BOTH SIDES OF AN OPEN TRAVELWAY, RAMP, OR LOOP WITHIN THE SAME LOCATION UNLESS PROTECTED WITH GUARDRAIL OR BARRIER.

PAVEMENT EDGE DROP OFF REQUIREMENTS

H) BACKFILL AT A 6:1 SLOPE UP TO THE EDGE AND ELEVATION OF EXISTING PAVEMENT IN AREAS ADJACENT TO AN OPENED TRAVEL LANE THAT HAS AN EDGE OF PAVEMENT DROP-OFF AS FOLLOWS:

   BACKFILL DROP-OFFS THAT EXCEED 2 INCHES ON ROADWAYS WITH POSTED SPEED LIMITS OF 45 MPH OR GREATER.

   BACKFILL DROP-OFFS THAT EXCEED 3 INCHES ON ROADWAYS WITH POSTED SPEED LIMITS LESS THAN 45 MPH.

   BACKFILL WITH SUITABLE COMPACTED MATERIAL, AS APPROVED BY THE ENGINEER, AT NO EXPENSE TO THE DEPARTMENT.

I) DO NOT EXCEED A DIFFERENCE OF 2 INCHES IN ELEVATION BETWEEN OPEN LANES OF TRAFFIC FOR NOMINAL LIFTS OF 1.5 INCHES. INSTALL ADVANCE WARNING "UNEVEN LANES" SIGNS (W8-11) 500 FEET IN ADVANCE AND A MINIMUM OF EVERY HALF MILE THROUGHOUT THE UNEVEN AREA.

TRAFFIC PATTERN ALTERATIONS

J) NOTIFY THE ENGINEER ONE MONTH PRIOR TO ANY TRAFFIC PATTERN ALTERATION.

SIGNING

K) INSTALL ADVANCE WORK ZONE WARNING SIGNS NO MORE THAN THREE (3) DAYS PRIOR TO THE BEGINNING OF CONSTRUCTION.

L) ENSURE ALL NECESSARY SIGNING IS IN PLACE PRIOR TO ALTERING ANY TRAFFIC PATTERN.

TRAFFIC CONTROL DEVICES

M) WHEN LANE CLOSURES ARE NOT IN EFFECT SPACE CHANNELIZING DEVICES IN WORK AREAS NO GREATER IN FEET THAN TWICE THE POSTED SPEED LIMIT (MPH) EXCEPT, 10 FT ON-CENTER IN RADII, AND 3 FT OFF THE EDGE OF AN OPEN TRAVELWAY. REFER TO STANDARD SPECIFICATIONS FOR ROADS AND STRUCTURES SECTIONS 1130 (DRUMS), 1135 (CONES), AND 1180 (SKINNY DRUMS) FOR ADDITIONAL REQUIREMENTS.

N) PLACE TYPE III BARRICADES, WITH "ROAD CLOSED" SIGN R11-2 ATTACHED, OF SUFFICIENT LENGTH TO CLOSE ENTIRE ROADWAY.

SEPI Engineering & Construction, Inc.
1 Glenwood Avenue
Raleigh, NC 27603
Tel:919.789.9977
Fax:919.789.9591
License: C-2197

APPROVED: DocuSigned by: Steve Miller 9FBC6C15CEEB486...

DATE: 10/8/2021

SEAL

NORTH CAROLINA PROFESSIONAL SEAL 037026 ENGINEER STEVEN D. MILLER

DOCUMENT NOT CONSIDERED FINAL UNLESS ALL SIGNATURES COMPLETED

DIVISION OF HIGHWAYS * STATE OF NORTH CAROLINA * DEPARTMENT OF TRANSPORTATION * WORK ZONE TRAFFIC CONTROL

TRANSPORTATION OPERATIONS PLAN

10/8/2021
X:\2019\SEI9.149.01 WBS 80074 Shotwell Road and US 70\TP\Traffic\TMP\W-5704 TMP-1B.dgn
dBauman

DocuSign Envelope ID: 278855FF-A3B0-4920-89E1-FE8FCA5403B6

PROJ. REFERENCE NO.	SHEET NO.
80074	TMP-2

INSET A
STEP-3

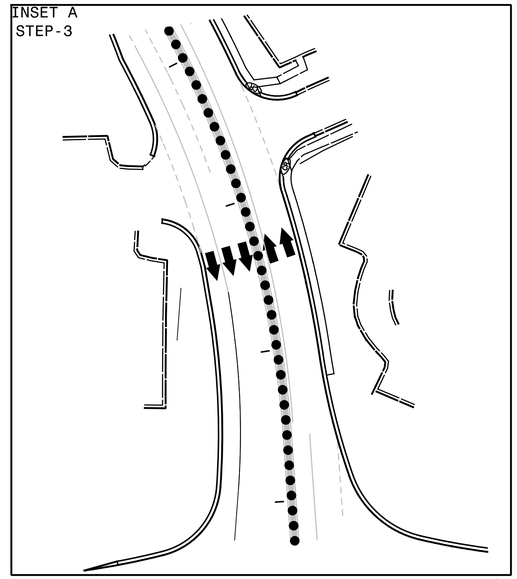

SEPI Engineering & Construction, Inc.
1 Glenwood Avenue
Raleigh, NC 27603
Tel:919.789.9977
Fax:919.789.9591
License: C-2197

APPROVED: Docusigned by: Steve Miller 9FBC6C15CEEB486...

DATE: 10/8/2021

SEAL

NORTH CAROLINA PROFESSIONAL SEAL 037026 ENGINEER STEVEN D. MILLER

DOCUMENT NOT CONSIDERED FINAL UNLESS ALL SIGNATURES COMPLETED

DIVISION OF HIGHWAYS * STATE OF NORTH CAROLINA * DEPARTMENT OF TRANSPORTATION * WORK ZONE TRAFFIC CONTROL

PHASE I

10/8/2021
X:\2019\SEI9J49.01 WBS 80074 ShotwellRoad and US 70\TP\Traffic\TMP\W-5704 TMP-2.dgn
JBauman

DocuSign Envelope ID: 278855FF-A3B0-4920-89E1-FE8FCA5403B6

PROJ. REFERENCE NO.	SHEET NO.
80074	TMP-3

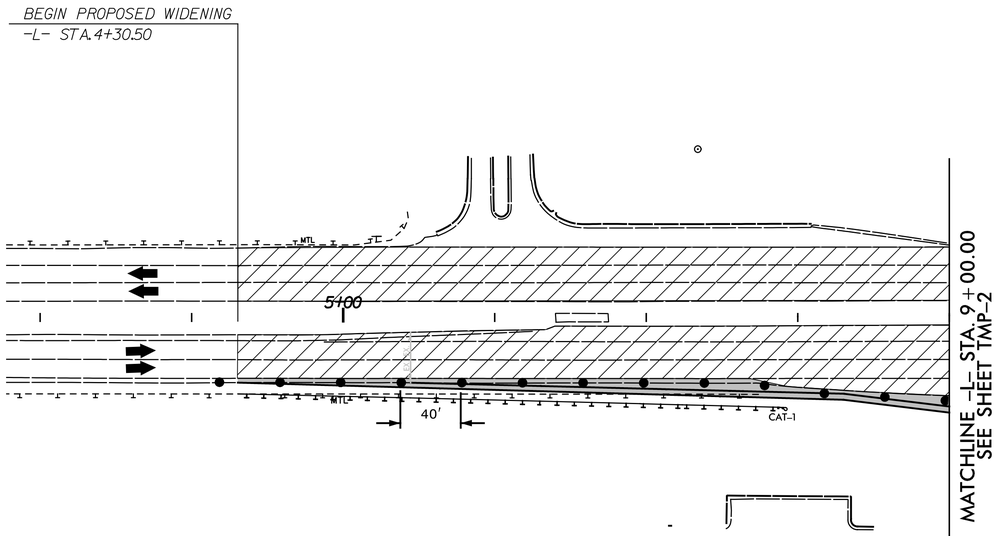

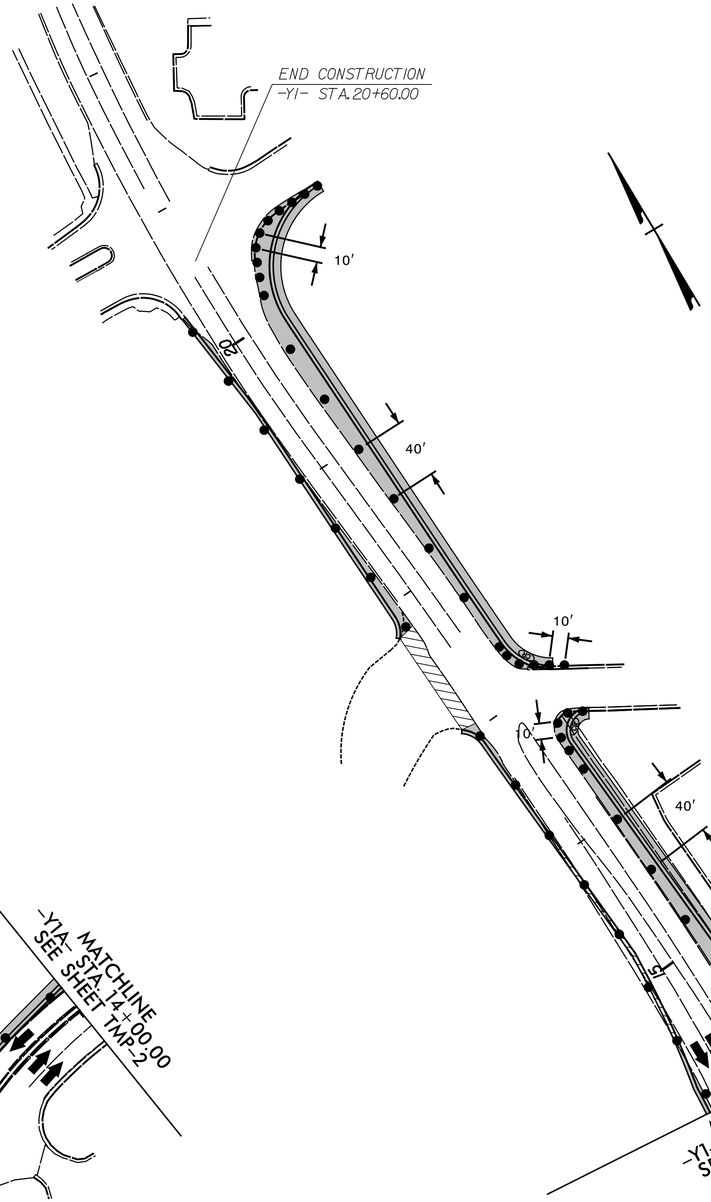

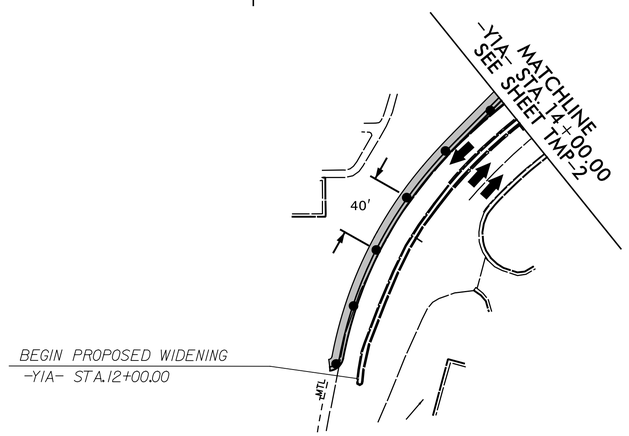

APPROVED: DocuSigned by: Steve Miller 9FBC6C15CEEB486...

DATE: 10/8/2021

SEAL

NORTH CAROLINA PROFESSIONAL SEAL 037026 ENGINEER STEVEN D. MILLER

DOCUMENT NOT CONSIDERED FINAL UNLESS ALL SIGNATURES COMPLETED

DIVISION OF HIGHWAYS * STATE OF NORTH CAROLINA * DEPARTMENT OF TRANSPORTATION * WORK ZONE TRAFFIC CONTROL

PHASE I

SEPI Engineering & Construction, Inc.
1 Glenwood Avenue
Raleigh, NC 27603
Tel:919.789.9977
Fax:919.789.9591
License: C-2197

10/8/2021
X:\2019\SE19.149.01 WBS 80074 Shotwell Road and US 70\TP\Traffic\TMP\W-5704 TMP-3.dgn
JBauman

DocuSign Envelope ID: 278855FF-A3B0-4920-89E1-FE8FCA5403B6

TIP NO.	SHEET NO.
80074	PMP-1

APPROVED: DocuSigned by: Steve Miller 9FBC6C15CEEB486...

DATE: 10/8/2021

SEAL

NORTH CAROLINA PROFESSIONAL SEAL 037026 ENGINEER STEVEN D. MILLER

DOCUMENT NOT CONSIDERED FINAL UNLESS ALL SIGNATURES COMPLETED

STATE OF NORTH CAROLINA
DEPARTMENT OF TRANSPORTATION

PAVEMENT MARKING PLAN
JOHNSTON COUNTY

LOCATION: US–70 BUSINESS AT SR 1553 (SHOTWELL ROAD)

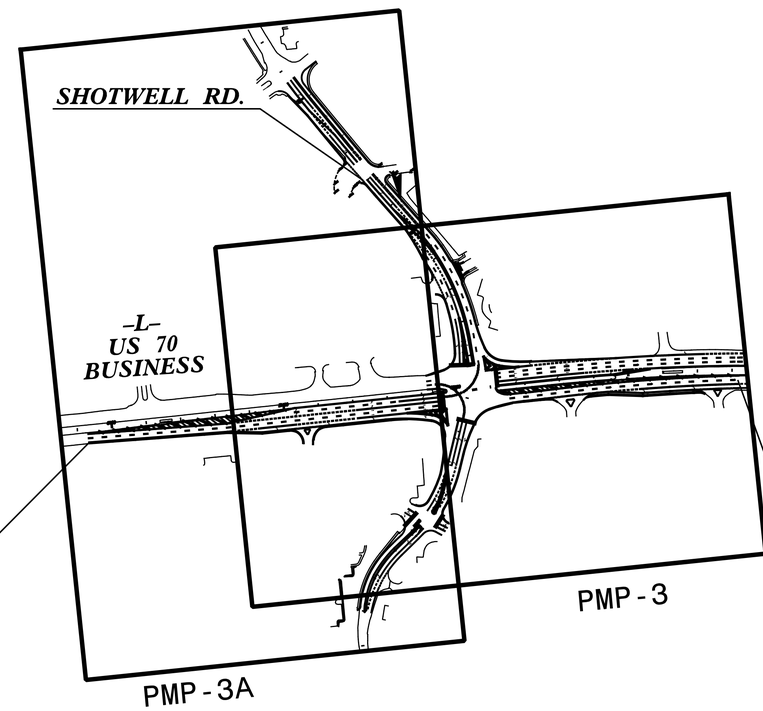

INDEX

SHEET NO.	DESCRIPTION
PMP-1	PAVEMENT MARKING PLAN TITLE SHEET
PMP-2	PAVEMENT MARKING SCHEDULE, GENERAL NOTES ROADWAY STANDARD DRAWINGS & QUANTITIES
PMP-3,3A	PAVEMENT MARKING DETAILS

PLAN PREPARED BY:
SEPI ENGINEERING & CONSTRUCTION

Steve Miller, PE — PROJECT MANAGER
John Bauman, PE — DESIGN ENGINEER

SEPI Engineering & Construction, Inc.
1 Glenwood Avenue
Raleigh, NC 27603
Tel:919.789.9977
Fax:919.789.9591
License: C-2197

PROJECT: 80074

CONTRACT: –

10/8/2021
X:\2019\SE19.149.01 WBS 80074 Shotwell Road and US 70\TP\Traffic\PMP\W-5704A&B_PMP_1.dgn
JBauman

DocuSign Envelope ID: FE0CAA84-198A-4FD6-91C0-6785CA5E7D52

TIP NO.	SHEET NO.
80074	PMP-2

APPROVED: DocuSigned by: Steve Miller 9FBC6C15CEEB486...

DATE: 11/4/2021

SEAL

NORTH CAROLINA PROFESSIONAL SEAL 037026 ENGINEER STEVEN D. MILLER

DOCUMENT NOT CONSIDERED FINAL UNLESS ALL SIGNATURES COMPLETED

PAVEMENT MARKING SCHEDULE

SYMBOL	DESCRIPTION
	THERMOPLASTIC (24", 90 MILS)
T61	WHITE STOPBAR
	THERMOPLASTIC (4", 90 MILS)
T1	WHITE EDGE LINE
T2	WHITE SOLID LANE LINE
T3	10 FT. WHITE SKIP
T4	3 FT. - 9 FT./SP WHITE MINISKIP
T5	2 FT. - 6 FT./SP WHITE MINISKIP
T10	YELLOW EDGE LINE
T13	YELLOW DOUBLE CENTER
	THERMOPLASTIC (6", 90 MILS)
T20	WHITE EDGE LINE
T21	WHITE SOLID LANE LINE
T22	10 FT. WHITE SKIP
T23	3 FT. - 9 FT./SP WHITE MINISKIP
T24	2 FT. - 6 FT./SP WHITE MINISKIP
T30	YELLOW EDGE LINE
	THERMOPLASTIC (8", 90 MILS)
T40	WHITE GORE LINE
T41	WHITE DIAGONAL
T42	YELLOW DIAGONAL
T43	WHITE SOLID LANE LINE
T44	3 FT. - 9 FT./SP WHITE MINISKIP
T46	WHITE CROSSWALK LINE
	THERMOPLASTIC (12", 90 MILS)
T52	YELLOW DIAGONAL
	THERMOPLASTIC PAVEMENT MARKING SYMBOLS (90 MILS)
T70	LEFT TURN ARROW
T71	RIGHT TURN ARROW
T72	STRAIGHT ARROW
T73	COMBO LEFT/STRAIGHT ARROW
T74	COMBO RIGHT/STRAIGHT ARROW
T103	24" YIELD LINE TRIANGLE
	THERMOPLASTIC PAVEMENT MARKING SYMBOLS (90 MILS)
T100	ALPHANUMEIC CHARACTERS
	NON CAST IRON SNOWPLOWABLE PAVEMENT MARKERS
ME	YELLOW & YELLOW
MF	CRYSTAL & RED

GENERAL NOTES

THE FOLLOWING GENERAL NOTES APPLY AT ALL TIMES FOR THE DURATION OF THE CONSTRUCTION PROJECT, EXCEPT WHEN OTHERWISE NOTED IN THE PLAN, OR DIRECTED BY THE ENGINEER.

A) INSTALL PAVEMENT MARKINGS AND PAVEMENT MARKERS ON THE FINAL SURFACE AS FOLLOWS:

ROAD NAME	MARKING	MARKER
US 70 BUSINESS	THERMOPLASTIC	SNOWPLOWABLE
SHOTWELL RD(SR1553)	THERMOPLASTIC	SNOWPLOWABLE

B) TIE PROPOSED PAVEMENT MARKING LINES TO EXISTING PAVEMENT MARKING LINES.

C) REMOVE/REPLACE ANY CONFLICTING/DAMAGED PAVEMENT MARKINGS AND MARKERS.

D) STOP BAR LOCATION AT NON-SIGNALIZED INTERSECTIONS MAY BE ADJUSTED AS DIRECTED BY THE ENGINEER.

E) UNLESS OTHERWISE SPECIFIED, HEATED-IN-PLACE THERMOPLASTIC MAY BE USED IN LIEU OF EXTRUDED THERMOPLASTIC FOR STOP BARS, SYMBOLS, CHARACTERS AND DIAGONALS. IF HEATED-IN-PLACE IS USED, IT SHALL BE PAID FOR USING THE EXTRUDED THERMOPLASTIC PAY ITEM.

F) SEE ROADWAY PLANS FOR ALTERNATE CURB RAMP DESIGNS WHEN INDICATED ON PAVEMENT MARKING DETAIL SHEETS.

ROADWAY STANDARD DRAWINGS

THE FOLLOWING ROADWAY STANDARDS AS APPEAR IN "ROADWAY STANDARD DRAWINGS" - PROJECT SERVICES UNIT - N.C. DEPARTMENT OF TRANSPORTATION - RALEIGH, N.C., DATED JANUARY 2018 ARE APPLICABLE TO THIS PROJECT AND BY REFERENCE HEREBY ARE CONSIDERED A PART OF THESE PLANS:

STD. NO.	TITLE
848.05	CURB RAMP - PROPOSED CURB AND GUTTER
848.06	CURB RAMP - EXISTING CURB AND GUTTER
1205.01	PAVEMENT MARKINGS - LINE TYPES AND OFFSETS
1205.02	PAVEMENT MARKINGS - TWO-LANE AND MULTILANE ROADWAYS
1205.04	PAVEMENT MARKINGS - INTERSECTIONS
1205.05	PAVEMENT MARKINGS - TURN LANES
1205.06	PAVEMENT MARKINGS - LANE DROPS
1205.07	PAVEMENT MARKINGS - PEDESTRIAN CROSSWALKS
1205.08	PAVEMENT MARKINGS - SYMBOLS AND WORD MESSAGES
1205.09	PAVEMENT MARKINGS - PAINTED ISLANDS
1250.01	RAISED PAVEMENT MARKERS - INSTALLATION SPACING
1253.01	RAISED PAVEMENT MARKERS - SNOWPLOWABLE
1264.01	OBJECT MARKERS - TYPES
1264.02	OBJECT MARKERS - INSTALLATION

SUMMARY OF QUANTITIES

ITEM NO.		ITEM DESCRIPTION	QUANTITY	UNIT
DESC. NO.	SECT. NO.			
4685000000-E	1205	THERMOPLASTIC PAVEMENT MARKING (4", 90 MILS)	8,715	LF
4688000000-E	1205	THERMOPLASTIC PAVEMENT MARKING (6", 90 MILS)	7,740	LF
4695000000-E	1205	THERMOPLASTIC PAVEMENT MARKING (8", 90 MILS)	1,615	LF
4700000000-E	1205	THERMOPLASTIC PAVEMENT MARKING (12", 90 MILS)	635	LF
4890000000-E	SP	THERMOPLASTIC PAVEMENT MARKING (24", 90 MILS)	310	LF
4720000000-N	1205	THERMOPLASTIC PAVEMENT MARKING CHARACTER (90 MILS)	8	EA
4725000000-E	1205	THERMOPLASTIC PAVEMENT MARKING SYMBOL (90 MILS)	69	EA
4895000000-N	SP	NON CAST IRON SNOWPLOWABLE PAVEMENT MARKERS	315	EA

SEPI Engineering & Construction, Inc.
1 Glenwood Avenue
Raleigh, NC 27603
Tel:919.789.9977
Fax:919.789.9591
License: C-2197

PAVEMENT MARKING SCHEDULE GENERAL NOTES, ROADWAY STANDARD DRAWINGS & SUMMARY OF QUANTITIES

V4.2202
V4.2201
Roadway
K:\TPD\Projects\2019\SE19.149.01 WBS 80074 Shotwell Road and US 70\TPT\Traffic\PMP\W-5704A&B_PMP_2.dgn

DocuSign Envelope ID: 278855FF-A3B0-4920-89E1-FE8FCA5403B6

TIP NO.	SHEET NO.
80074	PMP-3

APPROVED: DocuSigned by: Steve Miller 9FBC6C15CEEB486...

DATE: 10/8/2021

SEAL

NORTH CAROLINA PROFESSIONAL SEAL 037026 ENGINEER STEVEN D. MILLER

DOCUMENT NOT CONSIDERED FINAL UNLESS ALL SIGNATURES COMPLETED

NUMBER	CURB RAMP TYPE	STATION
1	TYPE 1D	-Y1-STA 13+13
2	TYPE 1D	-Y1-STA 13+68

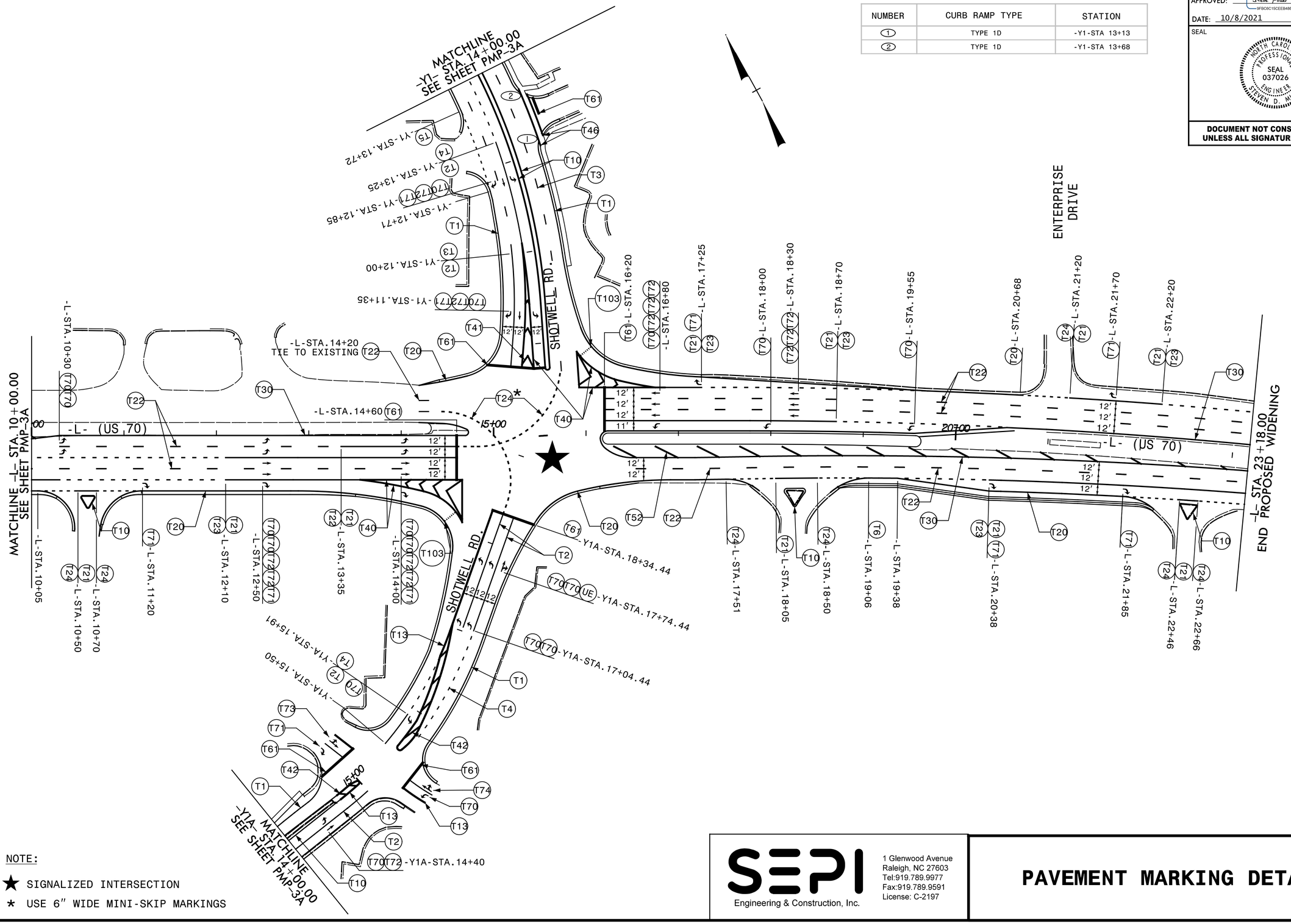

NOTE:

★ SIGNALIZED INTERSECTION

* USE 6" WIDE MINI-SKIP MARKINGS

SEPI Engineering & Construction, Inc.
1 Glenwood Avenue
Raleigh, NC 27603
Tel:919.789.9977
Fax:919.789.9591
License: C-2197

PAVEMENT MARKING DETAIL

10/8/2021
X:\2019\SE19.149.01 WBS 80074 Shotwell Road and US 70\TP\Traffic\PMP\W-5704A&B_PMP_3.dgn
JBauman

DocuSign Envelope ID: 278855FF-A3B0-4920-89E1-FE8FCA5403B6

TIP NO.	SHEET NO.
80074	PMP-3A

APPROVED: DocuSigned by: Steve Miller 9FBC6C15CEEB486...

DATE: 10/8/2021

SEAL

NORTH CAROLINA PROFESSIONAL SEAL 037026 ENGINEER STEVEN D. MILLER

DOCUMENT NOT CONSIDERED FINAL UNLESS ALL SIGNATURES COMPLETED

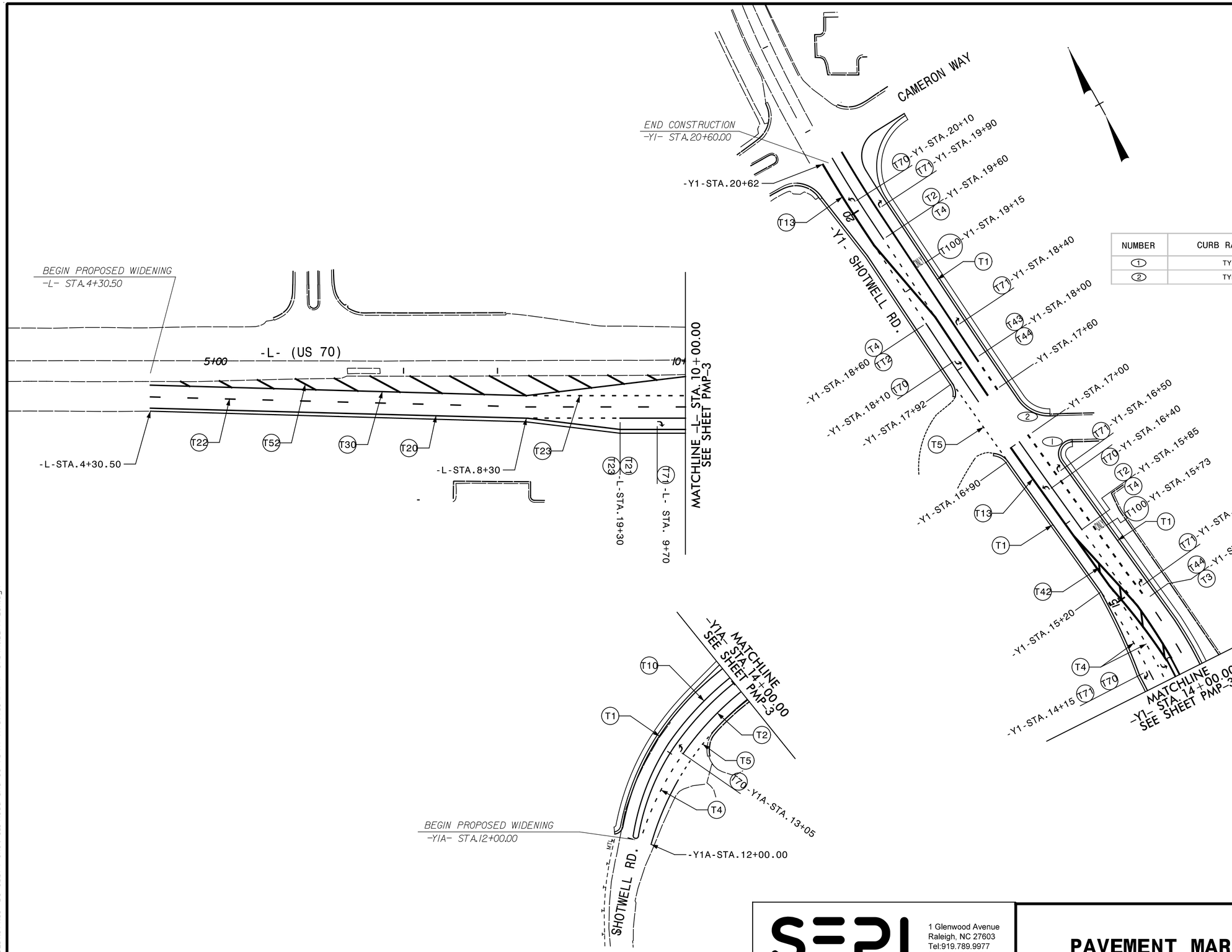

NUMBER	CURB RAMP TYPE	STATION
1	TYPE 1D	-Y1-STA 16+66
2	TYPE 1D	-Y1-STA 17+20

SEPI Engineering & Construction, Inc.
1 Glenwood Avenue
Raleigh, NC 27603
Tel:919.789.9977
Fax:919.789.9591
License: C-2197

PAVEMENT MARKING DETAIL

10/8/2021
X:\2019\SE19.149.01 WBS 80074 Shotwell Road and US 70\TP\Traffic\PMP\W-5704A&B_PMP_3A.dgn
JBaumon

09/08/49

TIP PROJECT: 80074

CONTRACT: DD00366

STATE OF NORTH CAROLINA
DIVISION OF HIGHWAYS

PLAN FOR PROPOSED
HIGHWAY EROSION CONTROL

JOHNSTON COUNTY

STATE	STATE PROJECT REFERENCE NO.	SHEET NO.	TOTAL SHEETS
N.C.	80074	1	

STATE PROJ. NO.	F. A. PROJ. NO.	DESCRIPTION
80074		Y1, Y1A (CONST.)

UPDATED SIGNAL

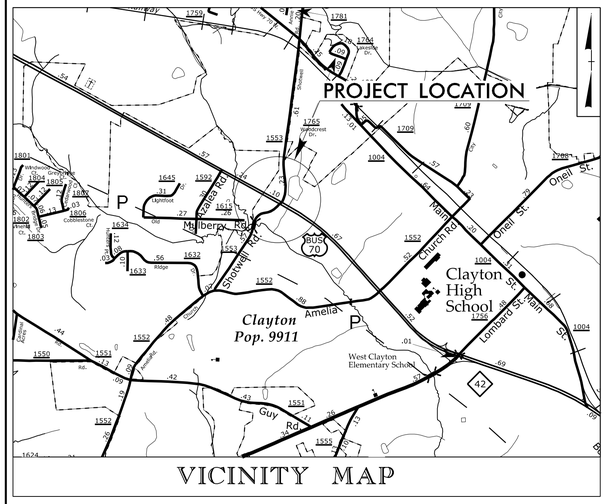

VICINITY MAP

LOCATION: US–70 BUSINESS AT SR 1553 (SHOTWELL ROAD)
TYPE OF WORK: GRADING, DRAINAGE, PAVING AND SIGNAL,

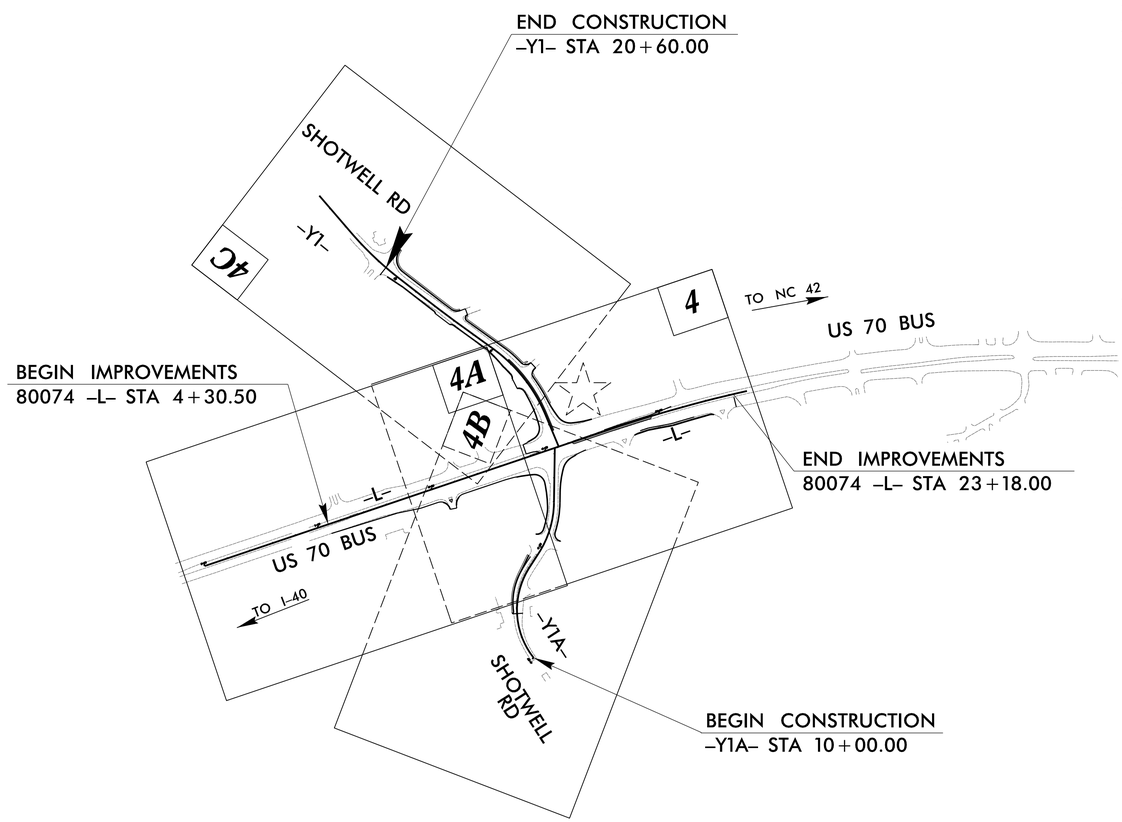

THIS PROJECT CONTAINS EROSION CONTROL PLANS FOR CLEARING AND GRUBBING PHASE OF CONSTRUCTION.

THIS PROJECT HAS BEEN DESIGNED TO SENSITIVE WATERSHED STANDARDS.

ENVIRONMENTALLY SENSITIVE AREA(S) EXIST ON THIS PROJECT

Refer To E. C. Special Provisions for Special Considerations.

EROSION AND SEDIMENT CONTROL MEASURES

Std. #	Description	Symbol
1630.03	Temporary Silt Ditch	TSD
1630.05	Temporary Diversion	TD
1605.01	Temporary Silt Fence	
1606.01	Special Sediment Control Fence	
1622.01	Temporary Berms and Slope Drains	
1630.02	Silt Basin Type B	
1633.01	Temporary Rock Silt Check Type–A	
	Temporary Rock Silt Check Type–A with Matting and Polyacrylamide (PAM)	
1633.02	Temporary Rock Silt Check Type–B	
	Wattle / Coir Fiber Wattle	EW CFW
	Wattle / Coir Fiber Wattle with Polyacrylamide (PAM)	
1634.01	Temporary Rock Sediment Dam Type–A	
1634.02	Temporary Rock Sediment Dam Type–B	
1635.01	Rock Pipe Inlet Sediment Trap Type–A	
1635.02	Rock Pipe Inlet Sediment Trap Type–B	
1630.04	Stilling Basin	
1630.06	Special Stilling Basin	
	Rock Inlet Sediment Trap:	
1632.01	Type A	A
1632.02	Type B	B
1632.03	Type C	C
	Skimmer Basin	
	Tiered Skimmer Basin	
	Infiltration Basin	

DOCUMENT NOT CONSIDERED FINAL UNLESS ALL SIGNATURES COMPLETED

GRAPHIC SCALES

50 25 0 50 100

PLANS

THESE EROSION AND SEDIMENT CONTROL PLANS COMPLY WITH THE APPLICABLE REGULATIONS SET FORTH BY THE NCG–010000 GENERAL CONSTRUCTION PERMIT EFFECTIVE APRIL 1, 2019 AND ISSUED BY THE NORTH CAROLINA DEPARTMENT OF ENVIRONMENTAL QUALITY DIVISION OF WATER RESOURCES.

SEPI Engineering & Construction, Inc.

1 Glenwood Avenue
Raleigh, NC 27603
Tel:919.789.9977
Fax:919.789.9591
License: C-2197

Prepared in the Office of:

SEPI, Inc.
1 Glenwood Avenue
Raleigh, NC 27603

Reviewed in the Office of:

Roadside Environmental Unit
1 South Wilmington Street
Raleigh, NC 27611

Designed by:

Tyler D. Overby ***4140***
NAME *LEVEL III CERTIFICATION NO.*

Reviewed by:

Aaron Harper, PE
NAME

Roadway Standard Drawings

The following roadway english standards as appear in "Roadway Standard Drawings"– Roadway Design Unit – N. C. Department of Transportation – Raleigh, N. C., dated January 2018 and the latest revison thereto are applicable to this project and by reference hereby are considered a part of these plans.

1604.01	Railroad Erosion Control Detail	1632.01	Rock Inlet Sediment Trap Type A
1605.01	Temporary Silt Fence	1632.02	Rock Inlet Sediment Trap Type B
1606.01	Special Sediment Control Fence	1632.03	Rock Inlet Sediment Trap Type C
1607.01	Gravel Construction Entrance	1633.01	Temporary Rock Silt Check Type A
1622.01	Temporary Berms and Slope Drains	1633.02	Temporary Rock Silt Check Type B
1630.01	Riser Basin	1634.01	Temporary Rock Sediment Dam Type A
1630.02	Silt Basin Type B	1634.02	Temporary Rock Sediment Dam Type B
1630.03	Temporary Silt Ditch	1635.01	Rock Pipe Inlet Sediment Trap Type A
1630.04	Stilling Basin	1635.02	Rock Pipe Inlet Sediment Trap Type B
1630.05	Temporary Diversion	1640.01	Coir Fiber Baffle
1630.06	Special Stilling Basin	1645.01	Temporary Stream Crossing
1631.01	Matting Installation		

10/8/2021
...\W5704A_B_reu_EC-01_TSH.dgn
USER:jfw

PROJECT REFERENCE NO.	SHEET NO.
80074	EC-2

SEPI Engineering & Construction, Inc.
1 Glenwood Avenue
Raleigh, NC 27603
Tel:919.789.9977
Fax:919.789.9591
License: C-2197

WATTLE WITH POLYACRYLAMIDE (PAM) DETAIL

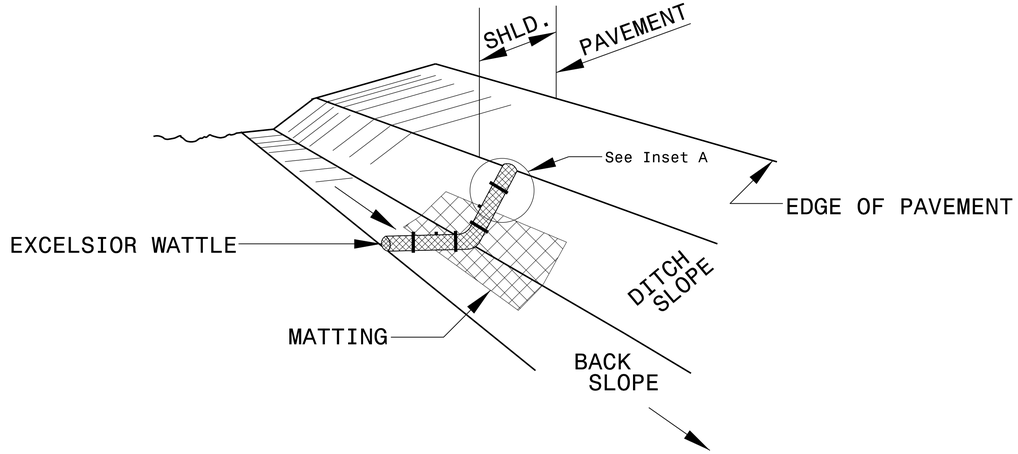

ISOMETRIC VIEW

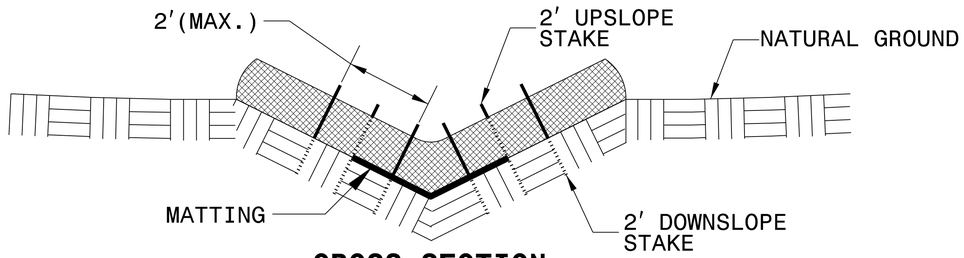

CROSS SECTION VEE DITCH

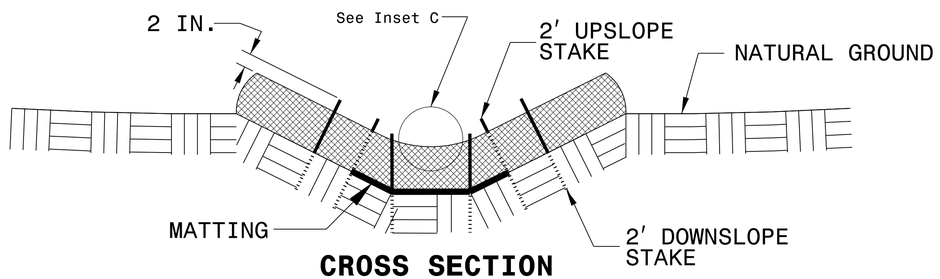

CROSS SECTION TRAPEZOIDAL DITCH

NOTES:

USE MINIMUM 12 IN. DIAMETER EXCELSIOR WATTLE.

USE 2 FT. WOODEN STAKES WITH A 2 IN. BY 2 IN. NOMINAL CROSS SECTION.

ONLY INSTALL WATTLE(S) TO A HEIGHT IN DITCH SO FLOW WILL NOT WASH AROUND WATTLE AND SCOUR DITCH SLOPES AND AS DIRECTED.

INSTALL A MINIMUM OF 2 UPSLOPE STAKES AND 4 DOWNSLOPE STAKES AT AN ANGLE TO WEDGE WATTLE TO BOTTOM OF DITCH.

PROVIDE STAPLES MADE OF 0.125 IN. DIAMETER STEEL WIRE FORMED INTO A U SHAPE NOT LESS THAN 12" IN LENGTH.

INSTALL STAPLES APPROXIMATELY EVERY 1 LINEAR FOOT ON BOTH SIDES OF WATTLE AND AT EACH END TO SECURE IT TO THE SOIL.

INSTALL MATTING IN ACCORDANCE WITH SECTION 1631 OF THE STANDARD SPECIFICATIONS.

PRIOR TO POLYACRYLAMIDE (PAM) APPLICATION, OBTAIN A SOIL SAMPLE FROM PROJECT LOCATION, AND FROM OFFSITE MATERIAL, AND ANALYZE FOR APPROPRIATE PAM FLOCCULANT TO BE APPLIED TO EACH WATTLE.

INITIALLY APPLY 2 OUNCES OF ANIONIC OR NEUTRALLY CHARGED PAM OVER WATTLE WHERE WATER WILL FLOW AND 1 OUNCE OF PAM ON MATTING ON EACH SIDE OF WATTLE. REAPPLY PAM AFTER EVERY RAINFALL EVENT THAT IS EQUAL TO OR EXCEEDS 0.50 IN.

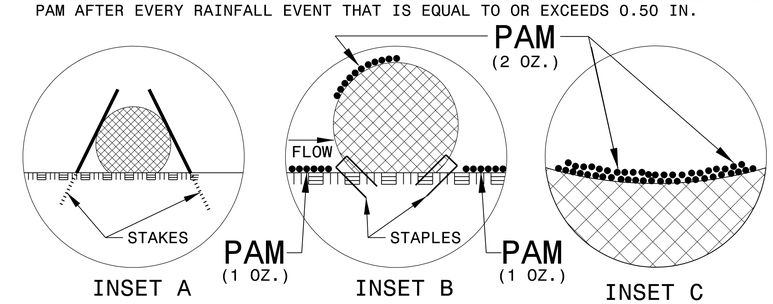

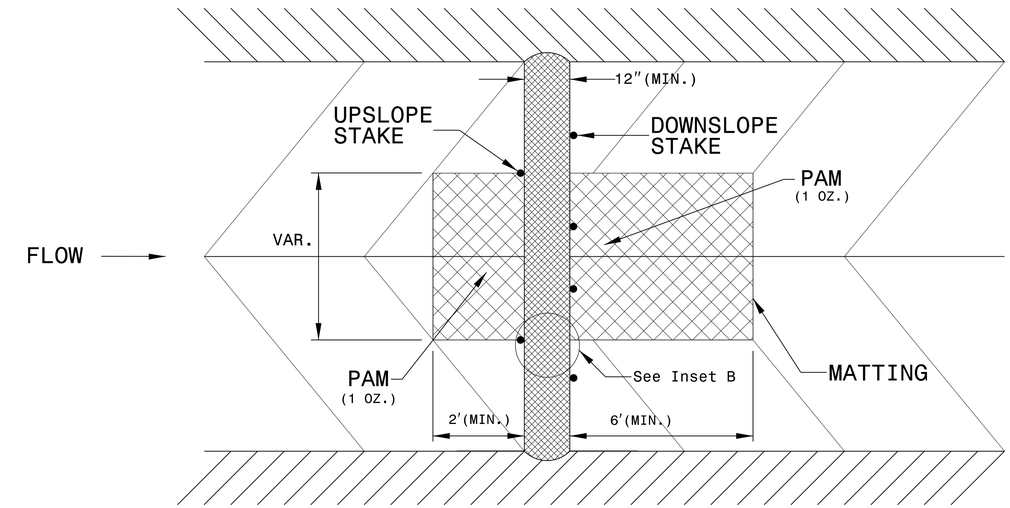

TOP VIEW

8/17/99
10/7/2021
...\W5704A_B_rev_EC-02_DTL.dgn
USER:ltw

8/17/99

PROJECT REFERENCE NO.	SHEET NO.
80074	EC-2A

SEPI Engineering & Construction, Inc.
1 Glenwood Avenue
Raleigh, NC 27603
Tel:919.789.9977
Fax:919.789.9591
License: C-2197

TEMPORARY ROCK SILT CHECK TYPE 'A' WITH EXCELSIOR MATTING AND POLYACRYLAMIDE (PAM)

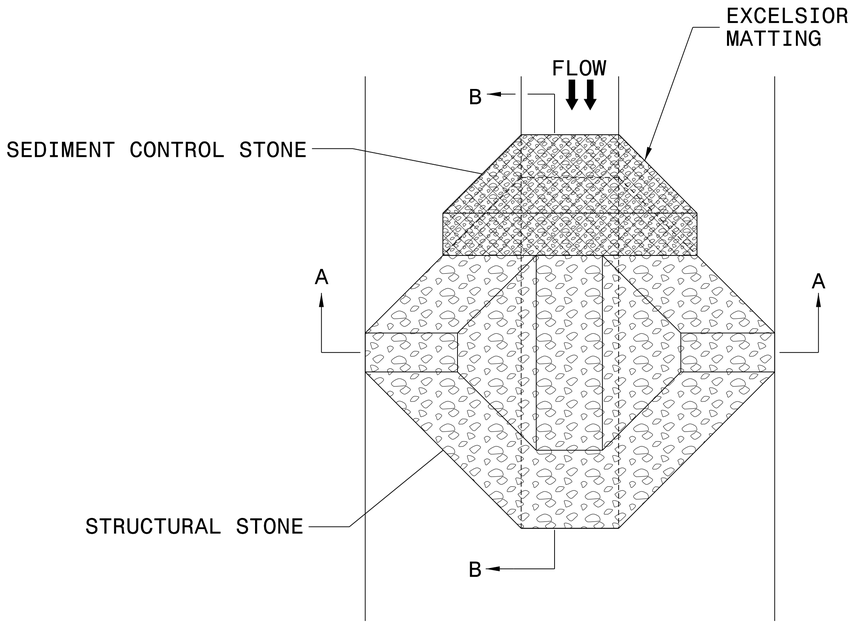

PLAN

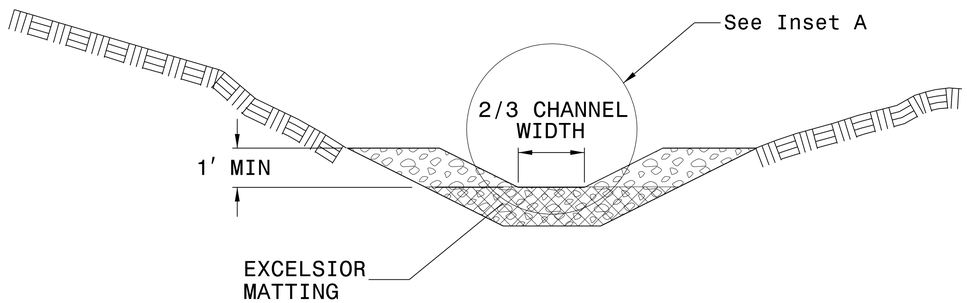

SECTION A-A

NOTES:

INSTALL TEMPORARY ROCK SILT CHECK TYPE A IN ACCORDANCE WITH ROADWAY STANDARD DRAWING NO. 1633.01.

USE EXCELSIOR FOR MATTING MATERIAL AND ANCHOR MATTING SECTION AT TOP AND BOTTOM WITH CLASS B STONE.

PRIOR TO POLYACRYLAMIDE (PAM) APPLICATION, OBTAIN A SOIL SAMPLE FROM PROJECT LOCATION, AND FROM OFFSITE MATERIAL, AND ANALYZE FOR APPROPRIATE PAM FLOCCULANT TO BE APPLIED TO EACH ROCK SILT CHECK.

INITIALLY APPLY 4 OUNCES OF POLYACRYLAMIDE (PAM) TO TOP OF MATTING SECTION AND AFTER EVERY RAINFALL EVENT THAT EQUALS OR EXCEEDS 0.50 INCHES.

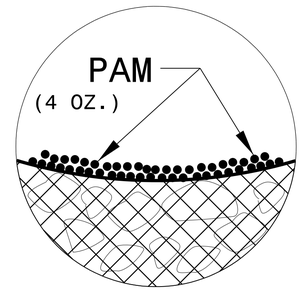

INSET A

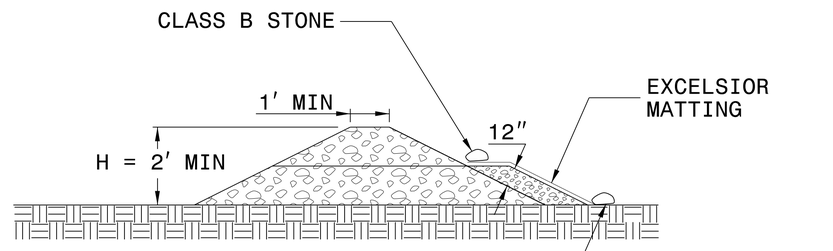

SECTION B-B

NOT TO SCALE

10/7/2021
USER: tw
I:\projects\80074\Roadway\Design\Sheets\80074A_B_rev_EC-02_DTL.dgn

8/17/99

REVISIONS

PROJECT REFERENCE NO.	SHEET NO.
80074	EC-3

SEPI Engineering & Construction, Inc.
1 Glenwood Avenue
Raleigh, NC 27603
Tel:919.789.9977
Fax:919.789.9591
License: C-2197

DIVISION OF HIGHWAYS
STATE OF NORTH CAROLINA

SOIL STABILIZATION SUMMARY SHEET

MATTING FOR EROSION CONTROL

CONST SHEET NO.	LINE	FROM STATION	TO STATION	SIDE	ESTIMATE (SY)
4	-L-	10+92	11+50	RT	80
4 / 4B	-Y1A-	16+00	17+00	LT	170
4A	-L-	7+50	9+50	RT	225
4B	-Y1A-	10+10	12+50	LT	220
4B	-Y1A-	13+00	14+35	LT	275
4C	-Y1-	14+50	16+50	LT	120
				SUBTOTAL	1,090
MISCELLANEOUS MATTING TO BE INSTALLED AS DIRECTED BY THE ENGINEER					340
				TOTAL	1,430
				SAY	1,430

MATTING FOR EROSION CONTROL

CONST SHEET NO.	LINE	FROM STATION	TO STATION	SIDE	ESTIMATE (SY)

10/7/2021
...\45704_B_rev_EC-03_SUM.dgn
USER: ty

PROJECT REFERENCE NO.	SHEET NO.
80074	EC-3A

SEPI Engineering & Construction, Inc.
1 Glenwood Avenue
Raleigh, NC 27603
Tel:919.789.9977
Fax:919.789.9591
License: C-2197

DIVISION OF HIGHWAYS
STATE OF NORTH CAROLINA

SOIL STABILIZATION TIMEFRAMES

SITE DESCRIPTION	STABILIZATION TIME	TIMEFRAME EXCEPTIONS
PERIMETER DIKES, SWALES, DITCHES AND SLOPES	7 DAYS	NONE
HIGH QUALITY WATER (HQW) ZONES	7 DAYS	NONE
SLOPES STEEPER THAN 3:1	7 DAYS	IF SLOPES ARE 10' OR LESS IN LENGTH AND ARE NOT STEEPER THAN 2:1, 14 DAYS ARE ALLOWED.
SLOPES 3:1 OR FLATTER	14 DAYS	7 DAYS FOR SLOPES GREATER THAN 50' IN LENGTH.
ALL OTHER AREAS WITH SLOPES FLATTER THAN 4:1	14 DAYS	NONE, EXCEPT FOR PERIMETERS AND HQW ZONES.

PROJECT REFERENCE NO.	SHEET NO.
80074	EC-4/CONST-4
R/W SHEET NO.	
ROADWAY DESIGN ENGINEER	HYDRAULICS ENGINEER

INCOMPLETE PLANS
DO NOT USE FOR R/W ACQUISITION

DOCUMENT NOT CONSIDERED FINAL UNLESS ALL SIGNATURES COMPLETED

SEPI Engineering & Construction, Inc.
1 Glenwood Avenue
Raleigh, NC 27603
Tel:919.789.9977
Fax:919.789.9591
License: C-2197

-L-	-Y1-	-Y1A-
PI Sta 27+34.76	PI Sta 13+27.21	PI Sta 15+86.74
△ = 18° 58' 02.4" (RT)	△ = 31° 35' 40.3" (LT)	△ = 32° 08' 16.6" (LT)
D = 1° 00' 00.0"	D = 8° 48' 53.0"	D = 14° 19' 26.2"
L = 1,896.73'	L = 358.43'	L = 224.37'
T = 957.12'	T = 183.90'	T = 115.22'
R = 5,729.58'	R = 650.00'	R = 400.00'
	SE = SEE PLANS	

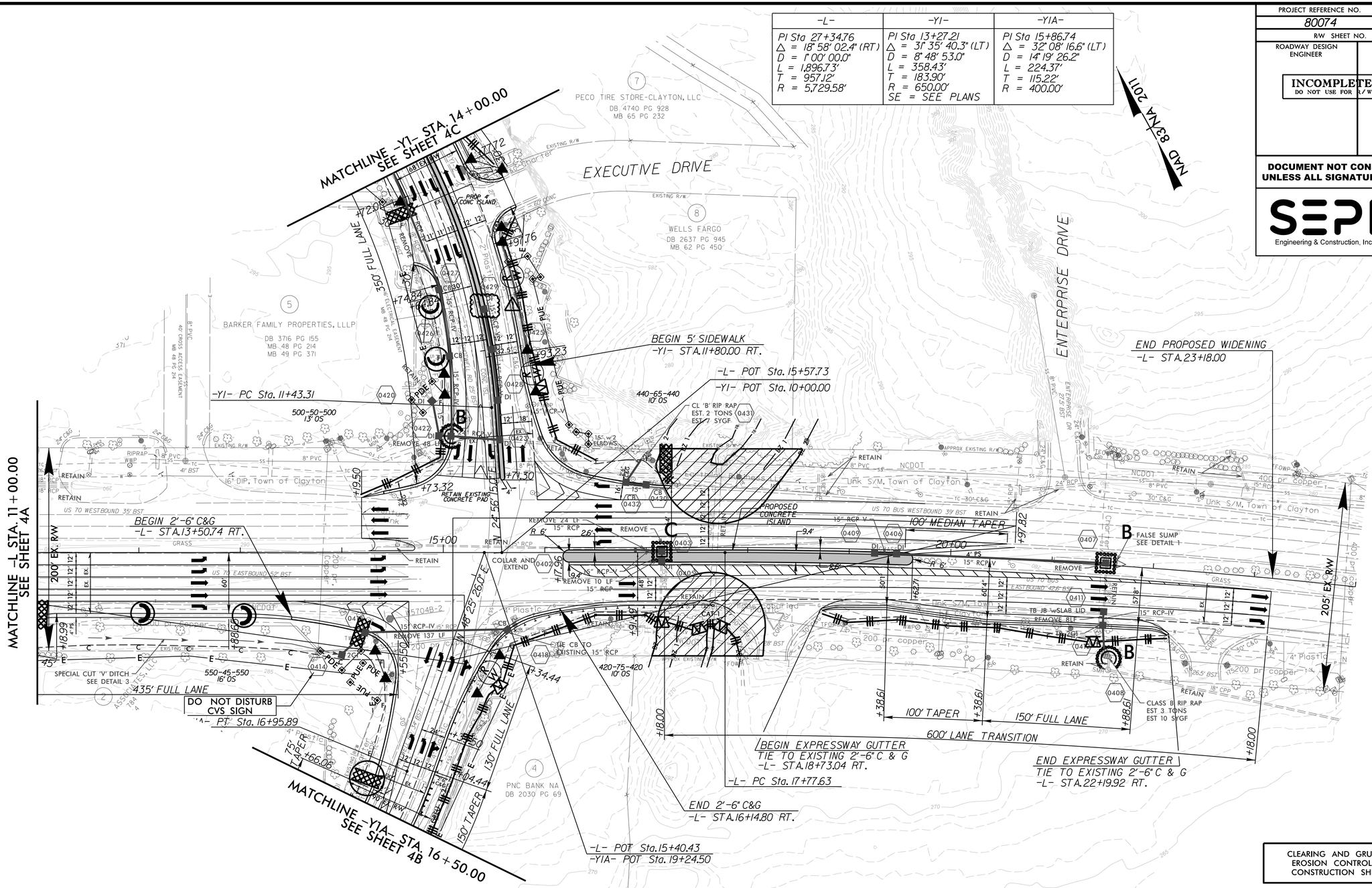

CLEARING AND GRUBBING EROSION CONTROL FOR CONSTRUCTION SHEET 4

NOTE:
PLACE TEMPORARY ROCK SEDIMENT DAMS TYPE - B AND TEMPORARY ROCK SILT CHECKS TYPE - A AT DRAINAGE OUTLETS.

ENVIRONMENTALLY SENSITIVE AREA
SEE PROJECT SPECIAL PROVISIONS

DETAIL 1
FALSE SUMP
(Not to Scale)

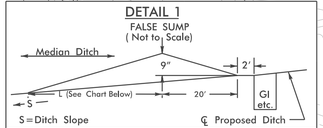

Ditch Grade	L	Ditch Grade	L
0.0% To 2.0%	20'	Over 4.0% To 6.0%	40'
Over 2.0% To 4.0%	30'	Over 6.0%	50'

FROM STA. 21+57 TO STA. 21+97 -L- MED

DETAIL 3
SPECIAL CUT DITCH
(Not to Scale)

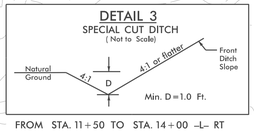

FROM STA. 11+50 TO STA. 14+00 -L- RT

INLET PROTECTION TYPE TO BE DETERMINED BY ENGINEER

REVISIONS

8/17/99

PROJECT REFERENCE NO.	SHEET NO.
80074	EC-5/CONST-4A
R/W SHEET NO.	
ROADWAY DESIGN ENGINEER	HYDRAULICS ENGINEER

INCOMPLETE PLANS
DO NOT USE FOR R/W ACQUISITION

DOCUMENT NOT CONSIDERED FINAL UNLESS ALL SIGNATURES COMPLETED

SEPI Engineering & Construction, Inc.
1 Glenwood Avenue
Raleigh, NC 27603
Tel:919.789.9977
Fax:919.789.9591
License: C-2197

INLET PROTECTION TYPE TO BE DETERMINED BY ENGINEER

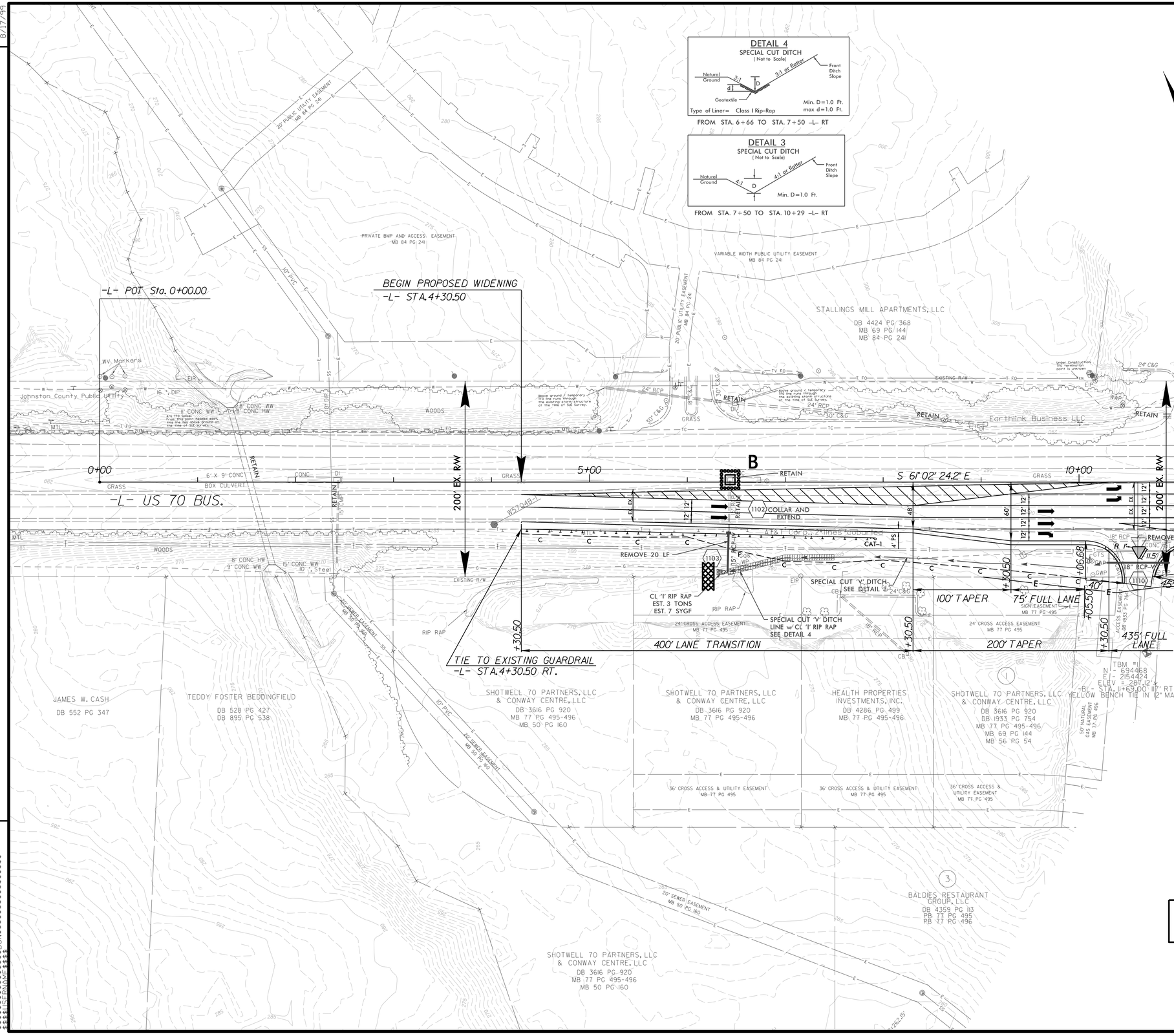

CLEARING AND GRUBBING
EROSION CONTROL FOR
CONSTRUCTION SHEET 4A

NOTE:
PLACE TEMPORARY ROCK SEDIMENT DAMS TYPE – B AND TEMPORARY ROCK SILT CHECKS TYPE – A AT DRAINAGE OUTLETS.

REVISIONS

8/17/99

8/17/99

REVISIONS

PROJECT REFERENCE NO.	SHEET NO.
80074	EC-6/CONST-4B
R/W SHEET NO.	
ROADWAY DESIGN ENGINEER	HYDRAULICS ENGINEER

INCOMPLETE PLANS
DO NOT USE FOR R/W ACQUISITION

DOCUMENT NOT CONSIDERED FINAL UNLESS ALL SIGNATURES COMPLETED

SEPI Engineering & Construction, Inc.
1 Glenwood Avenue
Raleigh, NC 27603
Tel:919.789.9977
Fax:919.789.9591
License: C-2197

NAD 83/NA 2011

-Y1A-	
PI Sta 12+36.87	PI Sta 15+86.74
△ = 67° 38' 52.1" (RT)	△ = 32° 08' 16.6" (LT)
D = 17° 37' 46.1"	D = 14° 19' 26.2"
L = 383.72'	L = 224.37'
T = 217.76'	T = 115.22'
R = 325.00'	R = 400.00'

INLET PROTECTION TYPE TO BE DETERMINED BY ENGINEER

BEGIN PROPOSED RESURFACING, SIDEWALK & CURB & GUTTER
-Y1A- STA.12+00.00

BEGIN PROPOSED WIDENING
-Y1A- STA.13+65.21

TIE TO EXISTING 2'-6" C&G & SIDEWALK
-Y1A- STA.14+42.41

-Y1A- PC Sta. 14+71.52

BEGIN 2'-6" C&G
-Y1A- STA.15+52.45

-Y1A- PT Sta. 14+02.82

-Y1A- POT Sta. 10+00.00

-Y1A- PC Sta. 10+19.10

BEGIN CONSTRUCTION
-Y1A- STA.10+00.00

-Y1A- SHOTWELL ROAD

MATCHLINE -Y1A- STA. 16+50.00
SEE SHEET 4

SPECIAL CUT 2-FT BASE DITCH SEE DETAIL 5

SPECIAL CUT 'V' DITCH SEE DETAIL 6

CL 'B' RIP RAP EST. 5 TONS EST. 14 SYGF

CL 'B' RIP RAP EST. 7 TONS EST. 14 SYGF

FLARE DITCH BASE WIDTH OUT TO 6-FT AND DAYLIGHT DITCH TO NATURAL GROUND

RETAIN

40' FULL LANE

75' TAPER

150' TAPER

30' FULL LANE

+51.06

+91.06

+54.44

+85.44

N 30° 33' 42.6" E

15+00

M. CLAYTON RL DB 39[illegible] MB 56 [illegible]

M. CLAYTON REALTY ASSOCIATES, DB 3985 PG 784 MB 56 PG 54

BALDIES RESTAURANT GROUP, LLC DB 4359 PG 113 PB 77 PG 495 PB 77 PG 496

DUPLET PROPERTIES, LLC DB 4605 PG 620 PB 74 PG 393 PB 74 PG 394

ASCO BUILDERS INC. DB 2558 PG 10 PB 42 PG 437

LIONS SPRING HOUSING ASSOC., LLC DB 3533 PG 897 PB 66 PG 339

SHOTWELL 70 PARTNERS, LLC & CONWAY CENTRE, LLC DB 6866 PG 520 DB 6935 PG 758 MB 77 PG 495-496 MB 69 PG 544 MB 56 PG 54

DUPLET PROPERTIES, INC. DB 4605 PG 620 PB 74 PG 393 PB 74 PG 394

YELLOW BRANCH

LITTLE CREEK

WOODS

ISBK BUS

Clay Pressurized Main

4" Plastic

DETAIL 5
SPECIAL CUT BASE DITCH
(Not to Scale)

Natural Ground | 3:1 | D | B | 3:1 OR FLATTER | Front Ditch Slope

Min. D=1.0 Ft.
B=2.0 Ft.

FROM STA. 10+10 TO STA. 12+50 -Y1A- LT

DETAIL 6
SPECIAL CUT DITCH
(Not to Scale)

Natural Ground | 3:1 | D | 4:1 or Flatter | Front Ditch Slope

Min. D=1.0 Ft.

FROM STA. 15+85 TO STA. 16+00 -Y1A- LT

ENVIRONMENTALLY SENSITIVE AREA
SEE PROJECT SPECIAL PROVISIONS

CLEARING AND GRUBBING
EROSION CONTROL FOR
CONSTRUCTION SHEET 4B

NOTE:
PLACE TEMPORARY ROCK SEDIMENT DAMS TYPE – B AND TEMPORARY ROCK SILT CHECKS TYPE – A AT DRAINAGE OUTLETS.

SYSTIME $$S
FILENAME $$DGN $$S $$S $$S

8/17/99

REVISIONS

CLEARING AND GRUBBING
EROSION CONTROL FOR
CONSTRUCTION SHEET 4C

NOTE:
PLACE TEMPORARY ROCK SEDIMENT DAMS TYPE – B AND TEMPORARY ROCK SILT CHECKS TYPE – A AT DRAINAGE OUTLETS.

INLET PROTECTION TYPE TO BE DETERMINED BY ENGINEER

PROJECT REFERENCE NO.	SHEET NO.
80074	EC-7/CONST-4C
R/W SHEET NO.	
ROADWAY DESIGN ENGINEER	HYDRAULICS ENGINEER

INCOMPLETE PLANS
DO NOT USE FOR R/W ACQUISITION

DOCUMENT NOT CONSIDERED FINAL UNLESS ALL SIGNATURES COMPLETED

SEPI Engineering & Construction, Inc.
1 Glenwood Avenue
Raleigh, NC 27603
Tel:919.789.9977
Fax:919.789.9591
License: C-2197

NAD 83/NA 2011

MATCHLINE -Y1- STA. 14+00.00
SEE SHEET 4

-Y1- PT Sta. 15+01.74
-Y1- PC Sta. 16+47.93
TIE TO EXIST. 2'-6" C&G
-Y1- STA. 20+31.58
END CONSTRUCTION
-Y1- STA. 20+60.00
-Y1- POT Sta. 24+69.12
-Y1- PT Sta. 18+24.94
-Y1- PC Sta. 19+82.10
-Y1- PT Sta. 22+69.12

TRIARC FOOD SYSTEMS INC. 23
DB 1348 PG 626
MB 48 PG 214
MB 49 PG 371

STALLINGS MILL APARTMENTS, LLC
DB 4424 PG 368
MB 69 PG 144
MB 84 PG 241

PECO TIRE STORE-CLAYTON, LLC
DB 4740 PG 928
MB 65 PG 232

LA COCINA #3, INC.
DB 5113 PG 589
MB 83 PG 470

TREE HOUSE PROPERTIES, LLC
DB 3358 PG 947
MB 70 PG 184

LEE BROTHERS RENTAL
DB 3344 PG 564
MB 84 PG 113

100' TAPER
100' FULL LANE
46.5' INC.
33.75' INC.
N 6° 39' 25.3" W
N 4° 37' 42.9" W
N 6° 54' 41.7" E
15" RCP-IV
18" RCP-IV
96 str FO
12" PVC
REMOVE JB AND 6 LF OF 15" RCP – REPLACE w/ MIN. DEPTH CB
TIE TO EXIST. 24" C&G
TIE PROPOSED CATCH BASIN TO EXISTING SITE DRAINAGE INSTALLED DURING DEVELOPMENT OF PARCEL #9 "LA COCINA #3, INC"
MTL UNDER CONSTRUCTION
ISBK
5' METAL AND BRICK FENCE
4' CLK FENCE
Century Link Marker
Town of Clayton Unk S/M 625
SR 1553 SHOTWELL RD 30.5' BST
SR 1553 SHOTWELL RD 37.5' BST
SR 1553 SHOTWELL RD BST VARIES
Unk S/M, Town of Clayton
20' DRAINAGE EASEMENT MB 65 PG 232
NON-EXCLUSIVE SEWER EASEMENT MB 83 PG 470
20' PUBLIC UTILITY EASEMENT MB 84 PG 241
VARIABLE WIDTH PUBLIC UTILITY EASEMENT MB 84 PG 241
20' UTILITY EASEMENT MB 70 PG 184
EXISTING R/W
RETAIN
PUE
DUE

NOTE:
PARCEL #9 "LA COCINA #3, INC." WAS UNDER CONSTRUCTION AT THE TIME OF ROADWAY PLAN DEVELOPMENT. FIELD SURVEYS WERE COMPLETED PRIOR TO SITE GRADING AND INSTALLATION OF DRAINAGE INFRASTRUCTURE. SITE PLANS HAVE BEEN REVIEWED IN ORDER TO COORDINATE ROADWAY AND DRAINAGE DESIGN FOR THE 80074 PROJECT.

NEWLY INSTALLED PIPED DRAINAGE INFRASTRUCTURE ON PARCEL #9 WILL SERVE AS THE DRAINAGE OUTLET FOR THE ROADWAY DRAINAGE SYSTEM LEAVING THE RIGHT-OF-WAY AT PROPOSED STRUCTURE 1303. THE INVERT ELEVATION FOR STRUCTURE 1303 IS BASED ON SITE DEVELOPMENT PLANS BY OTHERS, AND SHOULD BE VERIFIED PRIOR TO CONSTRUCTION.

-Y1-	
PI Sta 17+36.45	PI Sta 21+26.10
Δ = 2° 01' 42.5" (RT)	Δ = 11° 32' 24.5" (RT)
D = 1° 08' 45.3"	D = 4° 01' 14.7"
L = 177.02'	L = 287.01'
T = 88.52'	T = 143.99'
R = 5,000.00'	R = 1,425.00'
SE = SEE PLANS	SE = SEE PLANS

P:\Sn 97\...\...

SYSTIME
SERENME

-L-	-Y1-	-Y1A-
PI Sta 27+34.76 △ = 18° 58' 02.4" (RT) D = 1° 00' 00.0" L = 1,896.73' T = 957.12' R = 5,729.58'	PI Sta 13+27.21 △ = 31° 35' 40.3" (LT) D = 8° 48' 53.0" L = 358.43' T = 183.90' R = 650.00' SE = SEE PLANS	PI Sta 15+86.74 △ = 32° 08' 16.6" (LT) D = 14° 19' 26.2" L = 224.37' T = 115.22' R = 400.00'

NAD 83/NA 2011

PROJECT REFERENCE NO.	SHEET NO.
80074	EC-8/CONST-4
R/W SHEET NO.	
ROADWAY DESIGN ENGINEER	HYDRAULICS ENGINEER

INCOMPLETE PLANS
DO NOT USE FOR R/W ACQUISITION

DOCUMENT NOT CONSIDERED FINAL UNLESS ALL SIGNATURES COMPLETED

SEPI Engineering & Construction, Inc.
1 Glenwood Avenue
Raleigh, NC 27603
Tel:919.789.9977
Fax:919.789.9591
License: C-2197

8/17/99

REVISIONS

MATCHLINE -L STA. 11+00.00 SEE SHEET 4A

MATCHLINE -Y1- STA. 14+00.00 SEE SHEET 4C

MATCHLINE -Y1A- STA. 16+50.00 SEE SHEET 4B

EXECUTIVE DRIVE

ENTERPRISE DRIVE

PECO TIRE STORE-CLAYTON, LLC
DB 4740 PG 928
MB 65 PG 232

WELLS FARGO
DB 2637 PG 945
MB 62 PG 450

BARKER FAMILY PROPERTIES, LLLP
DB 3716 PG 155
MB 48 PG 214
MB 49 PG 371

PNC BANK NA
DB 2030 PG 69

-Y1- PC Sta. 11+43.31

500-50-500
13' 0S

BEGIN 5' SIDEWALK
-Y1- STA.11+80.00 RT.

-L- POT Sta. 15+57.73
-Y1- POT Sta. 10+00.00

440-65-440
10' 0S

END PROPOSED WIDENING
-L- STA.23+18.00

BEGIN 2'-6" C&G
-L- STA.13+50.74 RT.

DO NOT DISTURB CVS SIGN

-L- PT Sta. 16+95.89

END 2'-6" C&G
-L- STA.16+14.80 RT.

-L- POT Sta.15+40.43
-Y1A- POT Sta. 19+24.50

BEGIN EXPRESSWAY GUTTER
TIE TO EXISTING 2'-6" C & G
-L- STA.18+73.04 RT.

-L- PC Sta. 17+77.63

END EXPRESSWAY GUTTER
TIE TO EXISTING 2'-6" C & G
-L- STA.22+19.92 RT.

350' FULL LANE

435' FULL LANE

150' FULL LANE

130' FULL LANE

600' LANE TRANSITION

100' TAPER

100' MEDIAN TAPER

75' TAPER

150' TAPER

PROPOSED CONCRETE ISLAND

SPECIAL CUT 'V' DITCH
SEE DETAIL 3

550-45-550
16' 0S

420-75-420
10' 0S

CL 'B' RIP RAP
EST. 2 TONS
EST. 7 SYGF

CLASS B RIP RAP
EST 3 TONS
EST 10 SYGF

FALSE SUMP
SEE DETAIL 1

TIE CB TO EXISTING 15" RCP

RETAIN EXISTING CONCRETE PAD

COLLAR AND EXTEND

REMOVE 24 LF 15" RCP

REMOVE 137 LF

REMOVE 10 LF 15" RCP

TB JB w/SLAB LID
REMOVE 8LF

DETAIL 1
FALSE SUMP
(Not to Scale)

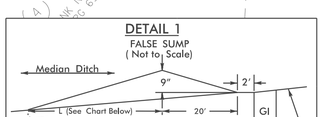

S=Ditch Slope ℄ Proposed Ditch

Ditch Grade	L	Ditch Grade	L
0.0% To 2.0%	20'	Over 4.0% To 6.0%	40'
Over 2.0% To 4.0%	30'	Over 6.0%	50'

FROM STA. 21+57 TO STA. 21+97 -L- MED

DETAIL 3
SPECIAL CUT DITCH
(Not to Scale)

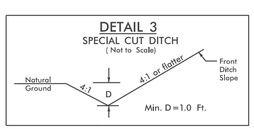

FROM STA. 11+50 TO STA. 14+00 -L- RT

INLET PROTECTION TYPE TO BE DETERMINED BY ENGINEER

FINAL PHASE
EROSION CONTROL FOR CONSTRUCTION SHEET 4

$$$$SYSTIME$$$$
$$$$SYSNAME$$$$
$$$$USERNAME$$$$

8/17/99

REVISIONS

PROJECT REFERENCE NO.	SHEET NO.
80074	EC-9/CONST-4A
R/W SHEET NO.	
ROADWAY DESIGN ENGINEER	HYDRAULICS ENGINEER

INCOMPLETE PLANS
DO NOT USE FOR R/W ACQUISITION

DOCUMENT NOT CONSIDERED FINAL UNLESS ALL SIGNATURES COMPLETED

SEPI Engineering & Construction, Inc.
1 Glenwood Avenue
Raleigh, NC 27603
Tel:919.789.9977
Fax:919.789.9591
License: C-2197

FINAL PHASE
EROSION CONTROL FOR
CONSTRUCTION SHEET 4A

INLET PROTECTION TYPE TO BE DETERMINED BY ENGINEER

NAD 83/NA 2011

DETAIL 4
SPECIAL CUT DITCH
(Not to Scale)

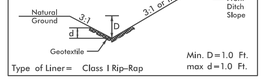

Min. D=1.0 Ft.
max d=1.0 Ft.
Type of Liner= Class I Rip-Rap

FROM STA. 6+66 TO STA. 7+50 -L- RT

DETAIL 3
SPECIAL CUT DITCH
(Not to Scale)



Min. D=1.0 Ft.

FROM STA. 7+50 TO STA. 10+29 -L- RT

-L- POT Sta. 0+00.00

BEGIN PROPOSED WIDENING
-L- STA. 4+30.50

-L- US 70 BUS.

TIE TO EXISTING GUARDRAIL
-L- STA. 4+30.50 RT.

MATCHLINE -L- STA. 11+00.00
SEE SHEET 4

PRIVATE BMP AND ACCESS EASEMENT
MB 84 PG 241

VARIABLE WIDTH PUBLIC UTILITY EASEMENT
MB 84 PG 241

20' PUBLIC UTILITY EASEMENT
MB 84 PG 241

STALLINGS MILL APARTMENTS, LLC
DB 4424 PG 368
MB 69 PG 144
MB 84 PG 241

Earthlink Business LLC

JAMES W. CASH
DB 552 PG 347

TEDDY FOSTER BEDDINGFIELD
DB 528 PG 427
DB 895 PG 538

SHOTWELL 70 PARTNERS, LLC
& CONWAY CENTRE, LLC
DB 3616 PG 920
MB 77 PG 495-496
MB 50 PG 160

HEALTH PROPERTIES INVESTMENTS, INC.
DB 4286 PG 499
MB 77 PG 495-496

SHOTWELL 70 PARTNERS, LLC
& CONWAY CENTRE, LLC
DB 3616 PG 920
DB 1933 PG 754
MB 77 PG 495-496
MB 69 PG 144
MB 56 PG 54

BALDIES RESTAURANT GROUP, LLC
DB 4359 PG 113
PB 77 PG 495
PB 77 PG 496

TBM #1
N = 694468
E = 2154424
ELEV = 287.12'
-BL- STA. 11+69.00 '
YELLOW BENCH TIE IN

S 61° 02' 24.2" E

100' TAPER
75' FULL LANE
400' LANE TRANSITION
200' TAPER
435' FULL LANE

200' EX. R/W

CL 'I' RIP RAP
EST. 3 TONS
EST. 7 SYGF

SPECIAL CUT 'V' DITCH
LINE w/ CL 'I' RIP RAP
SEE DETAIL 4

SPECIAL CUT 'V' DITCH
SEE DETAIL 4

REMOVE 20 LF

(1102) COLLAR AND EXTEND.

REMOVE CONC. FLUME

AT&T Corp. Z-Lines Cobbled

WV Markers

Johnston County Public Utility

16" DIP
12" CONC WW
8" CONC HW
10" DIP
8" CONC HW
9" CONC WW
15" CONC WW
10" Steel
6' X 9' CONC BOX CULVERT
24" RCP
30" C&G
24" C&G
18" RCP
15" RCP
10" PVC
4" FPS
CAT-1
WOODS
GRASS
RETAIN
EXISTING R/W
RIP RAP
INV=282.01'
INV=267.15'
INV=279.68'
INV=279.40'
INV=279.30'
INV=279.20'
INV=279.10'
INV=279.00'
INV=278.90'
INV=278.80'
INV=278.70'
INV=278.60'
INV=278.50'
INV=278.40'
INV=278.30'
INV=278.20'
INV=278.10'
INV=278.00'
INV=277.90'
INV=277.80'
INV=277.70'
INV=277.60'
INV=277.50'
INV=277.40'
INV=277.30'
INV=277.20'
INV=277.10'
INV=277.00'
INV=276.90'
INV=276.80'
INV=276.70'
INV=276.60'
INV=276.50'
INV=276.40'
INV=276.30'
INV=276.20'
INV=276.10'
INV=276.00'
INV=275.90'
INV=275.80'
INV=275.70'
INV=275.60'
INV=275.50'

PROJECT REFERENCE NO.	SHEET NO.
80074	EC-10/CONST-4B
R/W SHEET NO.	
ROADWAY DESIGN ENGINEER	HYDRAULICS ENGINEER

INCOMPLETE PLANS
DO NOT USE FOR R/W ACQUISITION

DOCUMENT NOT CONSIDERED FINAL UNLESS ALL SIGNATURES COMPLETED

SEPI Engineering & Construction, Inc.
1 Glenwood Avenue
Raleigh, NC 27603
Tel:919.789.9977
Fax:919.789.9591
License: C-2197

FINAL PHASE
EROSION CONTROL FOR CONSTRUCTION SHEET 4B

INLET PROTECTION TYPE TO BE DETERMINED BY ENGINEER

NAD 83/NA 2011

8/17/99 REVISIONS

-Y1A-

PI Sta 12+36.87	PI Sta 15+86.74
Δ = 67° 38' 52.1" (RT)	Δ = 32° 08' 16.6" (LT)
D = 17° 37' 46.1"	D = 14° 19' 26.2"
L = 383.72'	L = 224.37'
T = 217.76'	T = 115.22'
R = 325.00'	R = 400.00'

BEGIN PROPOSED WIDENING
-Y1A- STA.13+65.21

BEGIN PROPOSED RESURFACING, SIDEWALK & CURB & GUTTER
-Y1A- STA.12+00.00

-Y1A- POT Sta. 10+00.00

-Y1A- PC Sta. 10+19.10

BEGIN CONSTRUCTION
-Y1A- STA.10+00.00

-Y1A- SHOTWELL ROAD

TIE TO EXISTING 2'-6" C&G & SIDEWALK
-Y1A- STA.14+42.41

-Y1A- PC Sta. 14+71.52

BEGIN 2'-6" C&G
-Y1A- STA.15+52.45

-Y1A- PT Sta. 14+02.82

MATCHLINE -Y1A- STA. 16+50.00 SEE SHEET 4

N 9° 49' 34.1" E 10.00

N 80° 33' 42.6" E 15+00

CL 'B' RIP RAP EST. 5 TONS EST. 14 SYGF

CL 'B' RIP RAP EST. 7 TONS EST. 14 SYGF

SPECIAL CUT 2-FT BASE DITCH SEE DETAIL 5

SPECIAL CUT 'V' DITCH SEE DETAIL 6

FLARE DITCH BASE WIDTH OUT TO 6-FT AND DAYLIGHT DITCH TO NATURAL GROUND

40' FULL LANE

75' TAPER

150' TAPER

30'

+51.06

+54.44

+73.54

RETAIN

REMOVE 18" RCP-IV

24" RCP-V

18" RCP-V

MIN. DEPTH CB

BZ 1

BZ 2

DETAIL 5
SPECIAL CUT BASE DITCH
(Not to Scale)

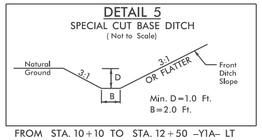

FROM STA. 10+10 TO STA. 12+50 -Y1A- LT

DETAIL 6
SPECIAL CUT DITCH
(Not to Scale)

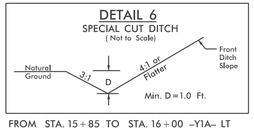

FROM STA. 15+85 TO STA. 16+00 -Y1A- LT

BALDIES RESTAURANT GROUP, LLC
DB 4359 PG 113
PB 77 PG 495
PB 77 PG 496

M. CLAYTON REALTY ASSOCIATES, DB 3985 PG 784 MB 56 PG 54

DUPLET PROPERTIES, LLC DB 4605 PG 620 PB 74 PG 393 PB 74 PG 394

ASCO BUILDERS INC. DB 2558 PG 10 PB 42 PG 437

LIONS SPRING HOUSING ASSOC., LLC DB 3533 PG 897 PB 66 PG 339

SHOTWELL 70 PARTNERS, LLC & CONWAY CENTRE, LLC DB 4936 PG 520 DB 4936 PG 522 MB 77 PG 495-496 MB 69 PG 54 MB 56 PG 54

ISBK BUS

LITTLE CREEK

WOODS

$$$$SYSTIME$$$$
$$$$USERNAME$$$$ $$$$DGNS$$$$

8/17/99

REVISIONS

INLET PROTECTION TYPE TO BE DETERMINED BY ENGINEER

NAD 83/NA 2011

PROJECT REFERENCE NO.	SHEET NO.
80074	EC-11/CONST-4C
R/W SHEET NO.	
ROADWAY DESIGN ENGINEER	HYDRAULICS ENGINEER

INCOMPLETE PLANS
DO NOT USE FOR R/W ACQUISITION

DOCUMENT NOT CONSIDERED FINAL UNLESS ALL SIGNATURES COMPLETED

SEPI Engineering & Construction, Inc.
1 Glenwood Avenue
Raleigh, NC 27603
Tel:919.789.9977
Fax:919.789.9591
License: C-2197

FINAL PHASE
EROSION CONTROL FOR CONSTRUCTION SHEET 4C

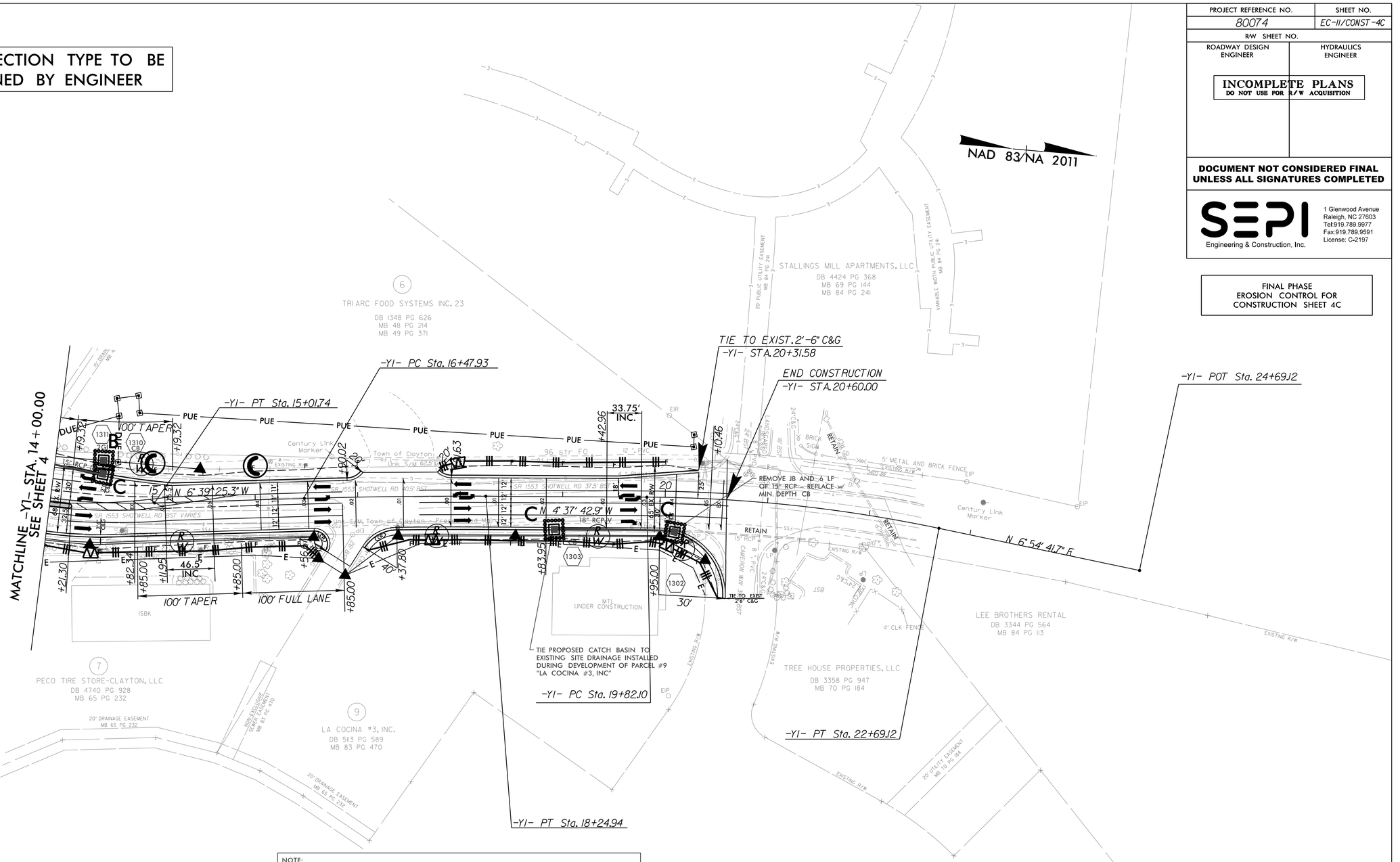

NOTE:

PARCEL #9 "LA COCINA #3, INC." WAS UNDER CONSTRUCTION AT THE TIME OF ROADWAY PLAN DEVELOPMENT. FIELD SURVEYS WERE COMPLETED PRIOR TO SITE GRADING AND INSTALLATION OF DRAINAGE INFRASTRUCTURE. SITE PLANS HAVE BEEN REVIEWED IN ORDER TO COORDINATE ROADWAY AND DRAINAGE DESIGN FOR THE 80074 PROJECT.

NEWLY INSTALLED PIPED DRAINAGE INFRASTRUCTURE ON PARCEL #9 WILL SERVE AS THE DRAINAGE OUTLET FOR THE ROADWAY DRAINAGE SYSTEM LEAVING THE RIGHT-OF-WAY AT PROPOSED STRUCTURE 1303. THE INVERT ELEVATION FOR STRUCTURE 1303 IS BASED ON SITE DEVELOPMENT PLANS BY OTHERS, AND SHOULD BE VERIFIED PRIOR TO CONSTRUCTION.

-Y1-	
PI Sta 17+36.45	PI Sta 21+26.10
Δ = 2° 01' 42.5" (RT)	Δ = 11° 32' 24.5" (RT)
D = 1° 08' 45.3"	D = 4° 01' 14.7"
L = 177.02'	L = 287.01'
T = 88.52'	T = 143.99'
R = 5,000.00'	R = 1,425.00'
SE = SEE PLANS	SE = SEE PLANS

$$$$SYSTIME$$$$
$$$$USERNAME$$$$
$$$$DGN$$$$

DocuSign Envelope ID: 29CDFCA1-4ACE-4670-88B4-AFA2A507B96D

TIP PROJECT: W-5704A&B

CONTRACT: -

STATE OF NORTH CAROLINA
DEPARTMENT OF TRANSPORTATION

SIGNING PLAN
JOHNSTON COUNTY

LOCATION: US 70 BUSINESS FROM SR 1553 (SHOTWELL ROAD) TO WILDWOOD DRIVE

TIP NO.	SHEET NO.
W-5704A&B	SIGN-1

APPROVED: DocuSigned by: Steven D Miller 1583A429322B44A...

DATE: 11/7/2019

SEAL

NORTH CAROLINA PROFESSIONAL SEAL 037026 ENGINEER STEVEN D. MILLER

DOCUMENT NOT CONSIDERED FINAL UNLESS ALL SIGNATURES COMPLETED

ROADWAY STANDARD DRAWINGS

THE FOLLOWING ROADWAY STANDARDS AS APPEAR IN "ROADWAY STANDARD DRAWINGS" - PROJECT SERVICES UNIT - N.C. DEPARTMENT OF TRANSPORTATION - RALEIGH, N.C., DATED JANUARY 2012 ARE APPLICABLE TO THIS PROJECT AND BY REFERENCE HEREBY ARE CONSIDERED A PART OF THESE PLANS:

STD. NO.	TITLE
904.10	ORIENTATION OF GROUND MOUNTED SIGNS
904.50	MOUNTING OF TYPE 'E' AND 'F' SIGNS ON 'U' CHANNEL POSTS

PROJECT NOTES

1. DISPOSAL OF SIGN SYSTEM, U-CHANNEL

GENERAL NOTES

. SIGNS FURNISHED BY STATE

. WHEN NOT STATIONED OR DIMENSIONED ON PLANS, ALL 'E' AND 'F' SIGNS SHALL BE FIELD LOCATED BY THE ENGINEER.

. ALL EXISTING SIGNS ON "U" CHANNEL POST WITHIN THE PROJECT LIMITS SHALL BE REMOVED AND DISPOSED OF UNLESS OTHERWISE NOTED ON PLANS.

. WHEN EXISTING SIGNS ARE REMOVED AND INSTALLED ON NEW SUPPORTS, THE RE-ERECTION SHALL IMMEDIATELY FOLLOW THE REMOVAL.

. THE BACKGROUND FOR TYPE E & F SIGNS SHALL BE TYPE C REFLECTIVE SHEETING.

. SEE ROADWAY PLANS FOR GUARD/GUIDE RAIL DETAILS.

SUMMARY OF QUANTITIES

ITEM NO.		ITEM DESCRIPTION	QUANTITY	UNIT
DESC. NO.	SECT. NO.			
4072000000	903	SUPPORTS, 3 LB STEEL U-CHANNEL	392	LF
4102000000	904	SIGN ERECTION, TYPE E	21	EA
4155000000	907	DISPOSAL OF SIGN SYSTEM, U-CHANNEL	14	EA

INDEX

SHEET NO.	DESCRIPTION
SIGN-1	TITLE SHEET
SIGN-2	TYPE E SIGNS
SIGN-3,3A	EXISTING & PROPOSED SIGNING DETAIL

N.C.D.O.T. CONTACT INFORMATION

Ayman I. Alqudwah, PE — SIGNING AND DELINEATION REGIONAL ENGINEER

D. Mitchell Eaton, PE — SIGNING AND DELINEATION PROJECT DESIGN ENGINEER

PLAN PREPARED BY: SEPI ENGINEERING & CONSTRUCTION

Steve Miller, PE — PROJECT MANAGER

Robert Screws, EI — DESIGN ENGINEER

SEPI Engineering & Construction, Inc.
1 Glenwood Avenue
Raleigh, NC 27603
Tel:919.789.9977
Fax:919.789.9591
License: C-2197

11/7/2019
W-5704A&B_SIGN_1.dgn
USER:rbowman

DocuSign Envelope ID: 278855FF-A3B0-4920-89E1-FE8FCA5403B6

(401) QUANTITY REQ'D 4



36" X 36"
R1-1

TWO "U" POSTS PER SIGN

(406) QUANTITY REQ'D 3



30" X 36"
R4-7

ONE "U" POST PER SIGN

(402) QUANTITY REQ'D 1



30" X 36"
R2-1 (45)

ONE "U" POST PER SIGN

(407) QUANTITY REQ'D 1



24" X 30"
R2-1 (35)

ONE "U" POST PER SIGN

(403) QUANTITY REQ'D 1



36" X 36"
R3-4

ONE "U" POST PER SIGN

(411) QUANTITY REQ'D 2



36" X 36"
R1-2

ONE "U" POST PER SIGN

(404) QUANTITY REQ'D 5



54" X 18"
R6-1R

TWO "U" POST PER SIGN

(412) QUANTITY REQ'D 2



36" X 36"
R5-1

ONE "U" POST PER SIGN

(405) QUANTITY REQ'D 2



36" X 36"
R3-7R

ONE "U" POST PER SIGN

(413) QUANTITY REQ'D 3

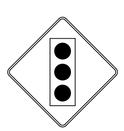

30" X 30"
W3-3

ONE "U" POST PER SIGN

TIP NO.	SHEET NO.
80074	SIGN-2

APPROVED: DocuSigned by: Steve Miller 9FBC6C15CEEB486...

DATE: 10/8/2021

SEAL

NORTH CAROLINA PROFESSIONAL SEAL 037026 ENGINEER STEVEN D. MILLER

DOCUMENT NOT CONSIDERED FINAL UNLESS ALL SIGNATURES COMPLETED

SEPI Engineering & Construction, Inc.
1 Glenwood Avenue
Raleigh, NC 27603
Tel:919.789.9977
Fax:919.789.9591
License: C-2197

TYPE "E" SIGNS

10/8/2021
K:\2019\SE19.149.01 WBS 80074 Shotwell Road and US 70\TP\Traffic\Signing\W-5704A&B_SIGN_2.dgn
jbaynon

DocuSign Envelope ID: 278855FF-A3B0-4920-89E1-FE8FCA5403B6

TIP NO.	SHEET NO.
80074	SIGN-3

APPROVED: DocuSigned by: Steve Miller 9FBC6C15CEEB486...

DATE: 10/8/2021

SEAL

NORTH CAROLINA PROFESSIONAL SEAL 037026 ENGINEER STEVEN D. MILLER

DOCUMENT NOT CONSIDERED FINAL UNLESS ALL SIGNATURES COMPLETED

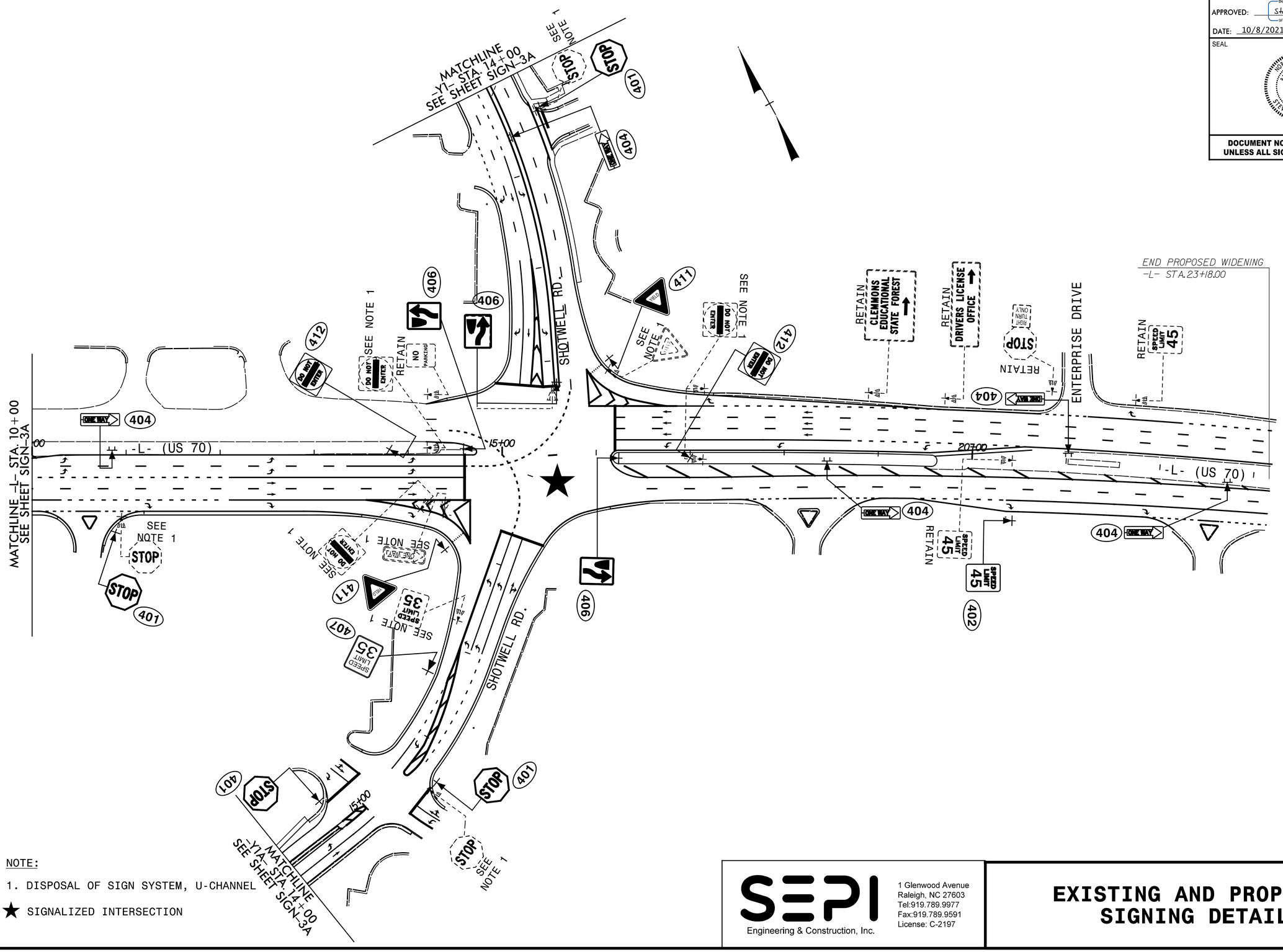

NOTE:

1. DISPOSAL OF SIGN SYSTEM, U-CHANNEL

★ SIGNALIZED INTERSECTION

SEPI Engineering & Construction, Inc.
1 Glenwood Avenue
Raleigh, NC 27603
Tel:919.789.9977
Fax:919.789.9591
License: C-2197

EXISTING AND PROPOSED SIGNING DETAIL

10/8/2021
X:\2019\SE19.149.01 WBS 80074 Shotwell Road and US 70\TP\Traffic\Signing\W-5704A&B_SIGN_3.dgn
JBauman

DocuSign Envelope ID: 278855FF-A3B0-4920-89E1-FE8FCA5403B6

TIP NO.	SHEET NO.
80074	SIGN-3A

APPROVED: Steve Miller (DocuSigned by: 9FBC6C15CEEB486...)

DATE: 10/8/2021

SEAL

NORTH CAROLINA PROFESSIONAL SEAL 037026 ENGINEER STEVEN D. MILLER

DOCUMENT NOT CONSIDERED FINAL UNLESS ALL SIGNATURES COMPLETED

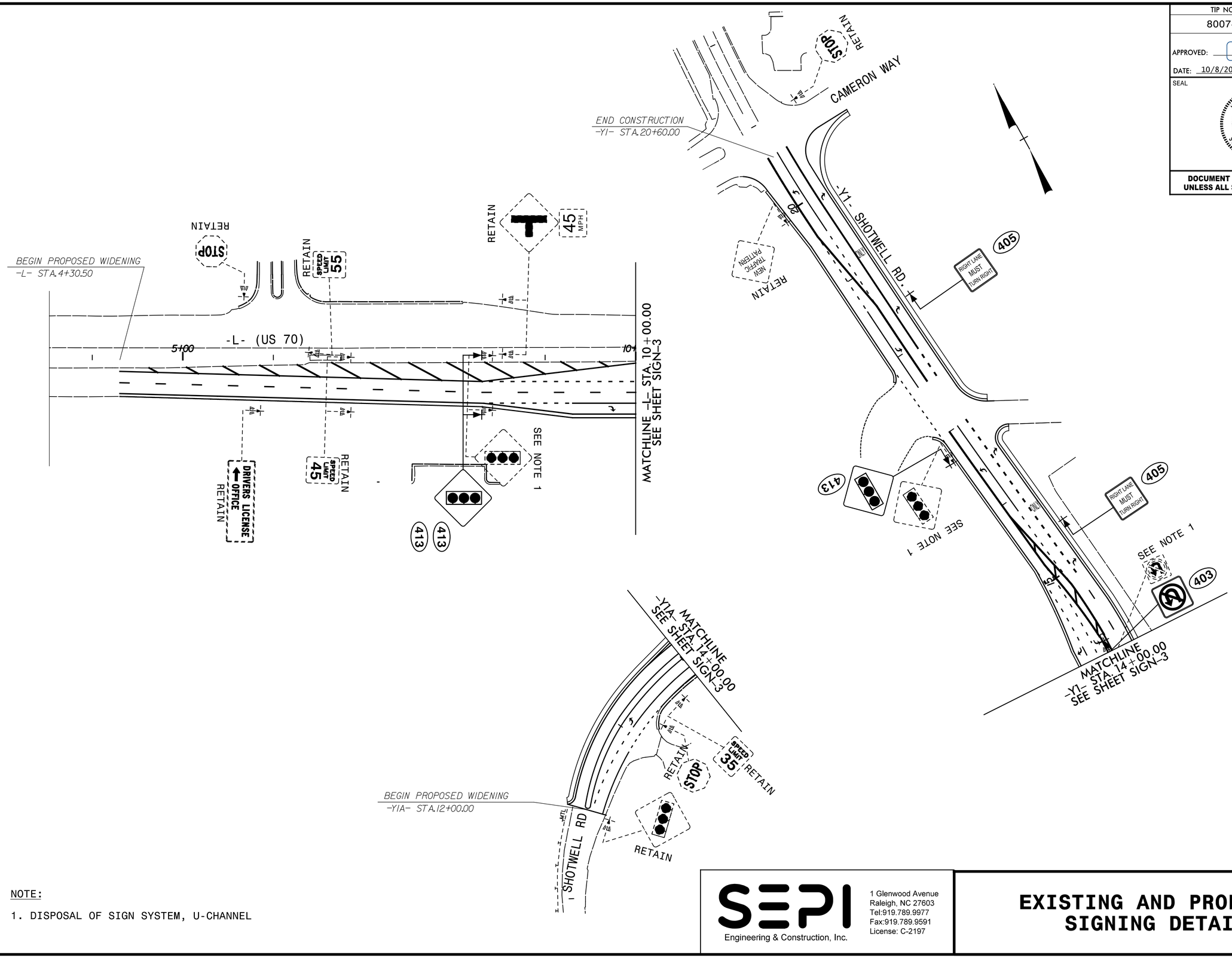

NOTE:

1. DISPOSAL OF SIGN SYSTEM, U-CHANNEL

SEPI Engineering & Construction, Inc.
1 Glenwood Avenue
Raleigh, NC 27603
Tel:919.789.9977
Fax:919.789.9591
License: C-2197

EXISTING AND PROPOSED SIGNING DETAIL

10/8/2021
W:\2019\SE19.149.01 WBS 80074 Shotwell Road and US 70\TP\Traffic\Signing\W-5704A&B_SIGN_3A.dgn
IBaumgardner

DocuSign Envelope ID: 84970217-ED34-417F-8434-4265F0BBA040

PROJECT REFERENCE NO.	SHEET NO.
80074	Sig-1.0

8 Phase
Fully Actuated
US 70 Bus. - NC 42 (Clayton) CLS

PHASING DIAGRAM

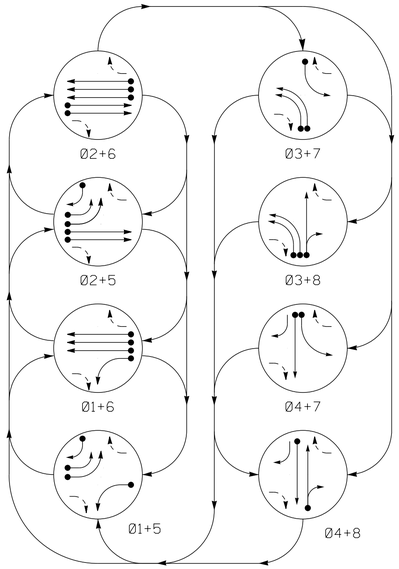

PHASING DIAGRAM DETECTION LEGEND

- DETECTED MOVEMENT
- UNDETECTED MOVEMENT (OVERLAP)
- UNSIGNALIZED MOVEMENT
- PEDESTRIAN MOVEMENT

TABLE OF OPERATION

SIGNAL FACE	PHASE 0 1 + 5	0 1 + 6	0 2 + 5	0 2 + 6	0 3 + 7	0 3 + 8	0 4 + 7	0 4 + 8	FLASH
11	↚	↚	↚R	↚R	↚R	↚R	↚R	↚R	↚R
21,22	R	R	G	G	R	R	R	R	Y
31,32	↚R	↚R	↚R	↚R	↚	↚	↚R	↚R	↚R
41,43	R	R	R	R	R	R	G	G	R
42	R↘	R	R↘	R	R	R	G	G	R
51,52	↚	↚R	↚	↚R	↚R	↚R	↚R	↚R	↚R
61,62,63,64	R	G	R	G	R	R	R	R	Y
71	↚R	↚R	↚R	↚R	↚	↚R	↚	↚R	↚R
81,82,83	R	R	R	R	R	G	R	G	R

SIGNAL FACE I.D.

All Heads L.E.D.

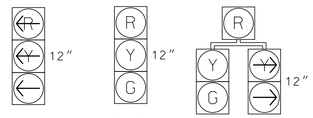

11
31,32
51,52
71

21,22
41,43
61,62,63,64
81,82,83

42

OASIS 2070 LOOP & DETECTOR INSTALLATION

INDUCTIVE LOOPS					DETECTOR PROGRAMMING						
LOOP	SIZE (FT)	DISTANCE FROM STOPBAR (FT)	TURNS	NEW LOOP	PHASE	CALLING	EXTENSION	FULL TIME DELAY	STRETCH TIME	DELAY TIME	SYSTEM LOOP	NEW CARD
1A	6x40	0	2-4-2	Y	1	Y	Y	–	–	–	–	–
2A	6x6	300	6	Y	2	Y	Y	–	–	–	–	–
2B	6x6	300	6	Y	2	Y	Y	–	–	–	–	–
3A	6x40	0	2-4-2	Y	3	Y	Y	–	–	3	–	–
3B	6x40	0	2-4-2	Y	3	Y	Y	–	–	-	–	–
4A	6x40	0	2-4-2	Y	4	Y	Y	–	–	-	–	–
5A	6x40	0	2-4-2	Y	5	Y	Y	–	–	–	–	–
5B	6x40	0	2-4-2	Y	5	Y	Y	–	–	–	–	Y
5C	6x40	0	2-4-2	Y	5	Y	Y	–	–	15	–	–
5D	6x6	0	3	Y	5	Y	Y	–	–	15	–	–
6A	6x6	300	6	Y	6	Y	Y	–	–	–	–	–
6B	6x6	300	6	Y	6	Y	Y	–	–	–	–	–
6C	6x6	300	6	Y	6	Y	Y	–	–	–	–	–
7A	6x40	0	2-4-2	Y	7	Y	Y	–	–	-	–	–
8A	6x40	0	2-4-2	Y	8	Y	Y	–	–	10	–	–
S32	6X6	+200	4	Y	–	–	–	–	–	–	Y	–
S33	6X6	+200	4	Y	–	–	–	–	–	–	Y	–
S34	6X6	+200	4	Y	–	–	–	–	–	–	Y	–
S35	6X6	+200	4	Y	–	–	–	–	–	–	Y	–
S36	6X6	+200	4	Y	–	–	–	–	–	–	Y	–

NOTES

1. Refer to "Roadway Standard Drawings NCDOT" dated January 2018, "Standard Specifications for Roads and Structures" dated January 2018, and all applicable sections of the latest version of the generic Project Special Provisions. The PSP can be accessed at the following website: https://connect.ncdot.gov/resources/safety/pages/ITS-Design-Resources.aspx
2. Do not program signal for late night flashing operation unless otherwise directed by the Engineer.
3. Phase 1 and/or phase 5 may be lagged.
4. Phase 3 and/or phase 7 may be lagged.
5. Set all detector units to presence mode.
6. Refer to W-5704A&B Pavement Marking Plans for pavement markings.
7. Maximum times shown in timing chart are for free-run operation only. Coordinated signal system timing values supersede these values.
8. Closed loop system data:
   Master Asset #:
   Controller Asset #: 1086.

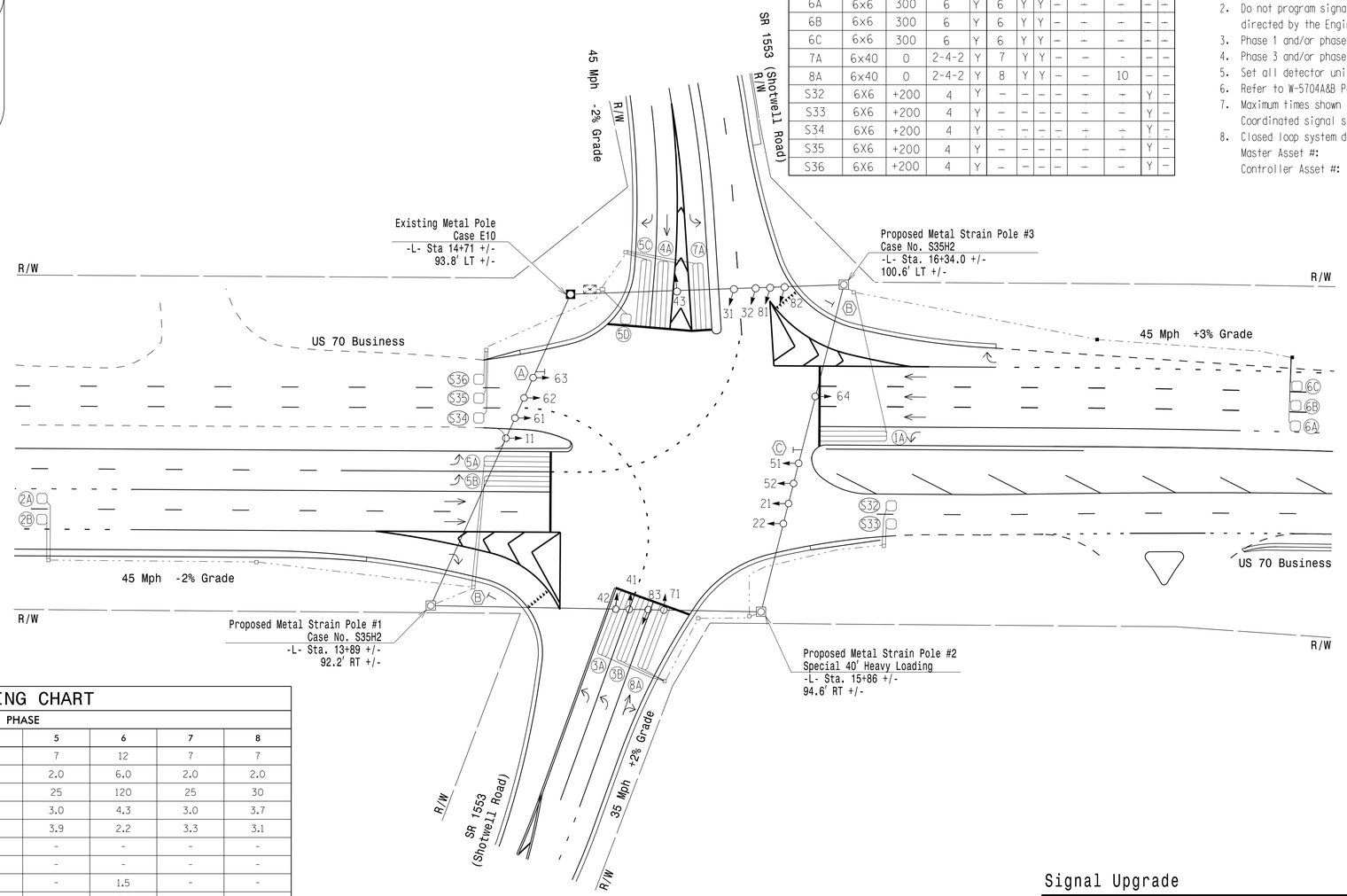

LEGEND

PROPOSED		EXISTING
○→	Traffic Signal Head	●→
◐→	Modified Signal Head	N/A
⊣	Sign	⊣
○	Signal Pole with Guy	●
○	Signal Pole with Sidewalk Guy	●
▭	Inductive Loop Detector	▭
⊠	Controller & Cabinet	⊠
□	Junction Box	■
□	Oversized Junction Box	■
-------	2-in Underground Conduit	-·-·-
———	Right of Way	———
→	Directional Arrow	→
⊠	Strain Pole	□
□→	Pedestrian Signal Head With Push Button & Sign	■→
Ⓐ	"LANE ENDS 2000 FT" Sign	Ⓐ
Ⓑ	"YIELD" Sign (R1-2)	Ⓑ
Ⓒ	"U-TURN YIELD TO RIGHT TURN" Sign (R10-16)	Ⓒ

OASIS 2070 TIMING CHART

FEATURE	PHASE 1	2	3	4	5	6	7	8
Min Green 1 *	7	12	7	7	7	12	7	7
Extension 1 *	2.0	6.0	2.0	2.0	2.0	6.0	2.0	2.0
Max Green 1 *	25	120	25	30	25	120	25	30
Yellow Clearance	3.0	4.7	3.0	4.7	3.0	4.3	3.0	3.7
Red Clearance	4.3	1.7	3.9	2.0	3.9	2.2	3.3	3.1
Walk 1 *	-	-	-	-	-	-	-	-
Don't Walk 1	-	-	-	-	-	-	-	-
Seconds Per Actuation *	-	1.5	-	-	-	1.5	-	-
Max Variable Initial *	-	34	-	-	-	34	-	-
Time Before Reduction *	-	15	-	-	-	15	-	-
Time To Reduce *	-	30	-	-	-	30	-	-
Minimum Gap	-	3.0	-	-	-	3.0	-	-
Recall Mode	-	MIN RECALL	-	-	-	MIN RECALL	-	-
Vehicle Call Memory	-	YELLOW	-	-	-	YELLOW	-	-
Dual Entry	-	-	-	-	-	-	-	-
Simultaneous Gap	ON	ON	ON	ON	ON	ON	ON	ON

* These values may be field adjusted. Do not adjust Min Green and Extension times for phases 2 and 6 lower than what is shown. Min Green for all other phases should not be lower than 4 seconds.

THIS PLAN SUPERSEDES THE PLAN SIGNED AND SEALED ON 2/22/2019

RS&H
8521 SIX FORKS ROAD, SUITE 400
RALEIGH, NC 27615
(919) 926-4100

Signal Upgrade

DOCUMENT NOT CONSIDERED FINAL UNLESS ALL SIGNATURES COMPLETED

Prepared In the Offices of:
Transportation Mobility and Safety Division
Traffic Engineering Branch
Signal Design Section
750 N.Greenfield Pkwy.Garner,NC 27529

US 70 Business
at
SR 1533 (Shotwell Road)

Division 4 Johnston County Clayton

PLAN DATE: February 2019 REVIEWED BY: J. Townsend
PREPARED BY: S.G. Haynie REVIEWED BY:

REVISIONS	INIT.	DATE

SCALE 0 40' 1"=40'

SEAL
NORTH CAROLINA PROFESSIONAL SEAL 029531 ENGINEER STEVEN G. HAYNIE
DocuSigned by: Steve Haynie 10/26/2021
SIGNATURE DATE
SIG. INVENTORY NO. 04-1086

10/26/2021
R:\Projects\Traffic\Signals\Design\Systems\New Plansheets\W-5704B_sig_psh_1-0.dgn
3:08:42 PM

DocuSign Envelope ID: 84970217-ED34-417F-8434-4265F0BBA040

PROJECT REFERENCE NO.	SHEET NO.
80074	Sig-1.1

EDI MODEL 2010ECL CONFLICT MONITOR PROGRAMMING DETAIL

(remove jumpers and set switches as shown)

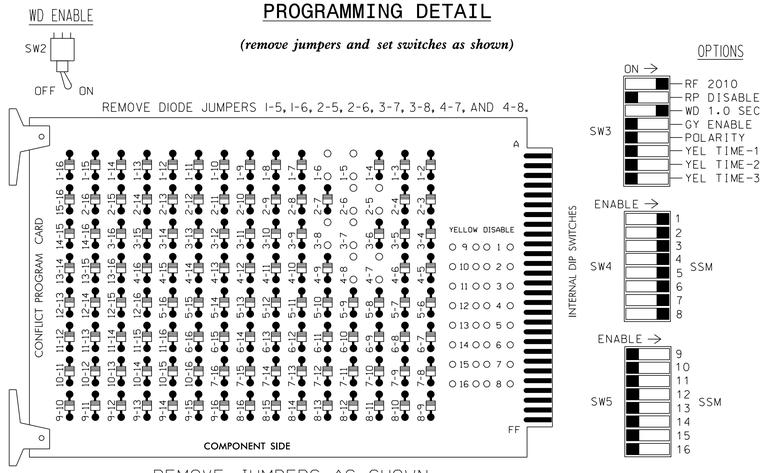

REMOVE JUMPERS AS SHOWN

■ = DENOTES POSITION OF SWITCH

NOTES:

1. Card is provided with all diode jumpers in place. Removal of any jumper allows its channels to run concurrently.
2. Make sure jumpers SEL2-SEL5 are present on the monitor board.

NOTES

1. To prevent "flash-conflict" problems, insert red flash program blocks for all unused vehicle load switches in the output file. The installer shall verify that signal heads flash in accordance with the Signal Plans.
2. Ensure that Red Enable is active at all times during normal operation. To prevent Red Failures on unused monitor channels, tie unused red monitor inputs 9, 10, 11, 12, 13, 14, 15 & 16 to load switch AC+ per the cabinet manufacturer's instructions.
3. Enable simultaneous Gap-Out for all phases.
4. Program phases 2 and 6 for Variable Initial and Gap Reduction.
5. Program phases 2 and 6 for Start Up In Green.
6. Program phases 2 and 6 for Yellow Flash.
7. The cabinet and controller are part of the US 70 Bus. - NC 42 (Clayton) CLS.

SIGNAL HEAD HOOK-UP CHART

LOAD SWITCH NO.	S1	S2	S2P	S3	S4	S4P	S5		S6	S6P	S7	S8	S8P
PHASE	1	2	2 PED	3	4	4 PED	5		6	6 PED	7	8	8 PED
SIGNAL HEAD NO.	11	21,22	NU	31,32	41,42 43	NU	51,52	42	61,62 63,64	NU	71	81,82 83	NU
RED		128			101				134			107	
YELLOW		129			102				135			108	
GREEN		130			103				136			109	
RED ARROW	125			116			131				122		
YELLOW ARROW	126			117			132	132			123		
GREEN ARROW	127			118			133	133			124		

NU = Not Used

EQUIPMENT INFORMATION

CONTROLLER.....2070
CABINET.....332
SOFTWARE.....ECONOLITE OASIS
CABINET MOUNT.....BASE
OUTPUT FILE POSITIONS...12
LOAD SWITCHES USED.....S1,S2,S3,S4,S5,S6,S7,S8
PHASES USED.....1,2,3,4,5,6,7,8
OVERLAPS.....NONE

INPUT FILE POSITION LAYOUT

(front view)

		1	2	3	4	5	6	7	8	9	10	11	12	13	14
FILE "I"	U	ø1 1A	ø2 2A	SLOT EMPTY	SLOT EMPTY	SLOT EMPTY	ø3 3A	ø7 7A	SLOT EMPTY	SYS DET. S32	SLOT EMPTY	SLOT EMPTY	SLOT EMPTY	SLOT EMPTY	FS DC ISOLATOR
	L	NOT USED	ø2 2B				ø3 3B	ø4 4A		SYS DET. S33					ST DC ISOLATOR
FILE "J"	U	ø5 5A	ø6 6A	ø6 6C	SLOT EMPTY	SLOT EMPTY	SYS DET. S34	SYS DET. S35	ø8 8A	ø5 5C	SLOT EMPTY	SLOT EMPTY	SLOT EMPTY	SLOT EMPTY	SLOT EMPTY
	L	NOT USED	ø6 6B	ø5 5B			NOT USED	SYS DET. S36	NOT USED	ø5 5D					

EX.: 1A, 2A, ETC. = LOOP NO.'S

FS = FLASH SENSE
ST = STOP TIME

INPUT FILE CONNECTION & PROGRAMMING CHART

LOOP NO.	LOOP TERMINAL	INPUT FILE POS.	PIN NO.	INPUT ASSIGNMENT NO.	DETECTOR NO.	NEMA PHASE	CALL	EXTEND	FULL TIME DELAY	STRETCH TIME	DELAY TIME
1A	TB2-1,2	I1U	56	18	1	1	Y	Y			
2A	TB2-5,6	I2U	39	1	2	2	Y	Y			
2B	TB2-7,8	I2L	43	5	12	2	Y	Y			
3A	TB4-9,10	I6U	41	3	4	3	Y	Y			3
3B	TB4-11,12	I6L	45	7	14	3	Y	Y			
4A	TB6-3,4	I7L	78	40	44	4	Y	Y			
5A	TB3-1,2	J1U	55	17	5	5	Y	Y			
5B	TB3-11,12	J3L	77	39	46	5	Y	Y			
5C	TB7-9,10	J9U	59	21	15	5	Y	Y			15
5D	TB7-11,12	J9L	61	23	17	5	Y	Y			15
6A	TB3-5,6	J2U	40	2	6	6	Y	Y			
6B	TB3-7,8	J2L	44	6	16	6	Y	Y			
6C	TB3-9,10	J3U	64	26	36	6	Y	Y			
7A	TB6-1,2	I7U	65	27	34	7	Y	Y			
8A	TB7-5,6	J8U	50	12	28	8	Y	Y			10
✳S32	TB6-9,10	I9U	60	22	11	SYS					
✳S33	TB6-11,12	I9L	62	24	13	SYS					
✳S34	TB5-9,10	J6U	42	4	8	SYS					
✳S35	TB7-1,2	J7U	66	28	38	SYS					
✳S36	TB7-3,4	J7L	79	41	48	SYS					

✳ System detector only. Remove the vehicle phase assigned to this detector in the default programming.

INPUT FILE POSITION LEGEND: J2L
FILE J
SLOT 2
LOWER

THIS PLAN SUPERSEDES THE PLAN SIGNED AND SEALED ON 2/22/2019

THIS ELECTRICAL DETAIL IS FOR
THE SIGNAL DESIGN: 04-1086
DESIGNED: February 2019
SEALED: February 2019
REVISED: October 2021

Signal Upgrade

DOCUMENT NOT CONSIDERED FINAL UNLESS ALL SIGNATURES COMPLETED

Prepared for the Office of:
NCDOT Transportation Mobility and Safety Division Traffic Engineering Branch Signals Management Section
750 N. Greenfield Pkwy., Garner, NC 27529

RS&H
8521 SIX FORKS ROAD, SUITE 400
RALEIGH, NC 27615
(919) 926-4100

US 70 Business
at
SR 1533 (Shotwell Road)

Division 4 Johnston County Clayton

PLAN DATE:	February 2019	REVIEWED BY:	J. Townsend
PREPARED BY:	S.G. Haynie	REVIEWED BY:	-

REVISIONS	INIT.	DATE

SEAL
NORTH CAROLINA PROFESSIONAL SEAL 029531 ENGINEER STEVEN G. HAYNIE

DocuSigned by: Steve Haynie 10/26/2021
DESIGNER'S SIGNATURE DATE

Sig. Inventory No. 04-1086

10/26/2021 8:10:39 AM
C:\Users\shaynie\Documents\Traffic\Signals\Design\System\New Plansheets\W-5704B_sig_psh_1-1.dgn

DocuSign Envelope ID: 84970217-ED34-417F-8434-4265F0BBA040

PROJECT REFERENCE NO.	SHEET NO.
80074	Sig-1.2

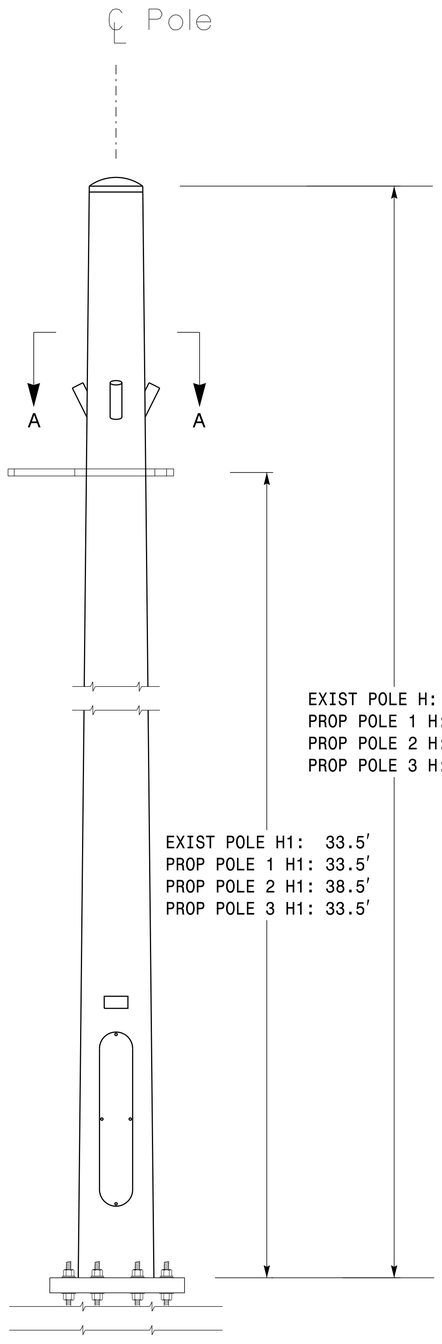

Pole Elevation

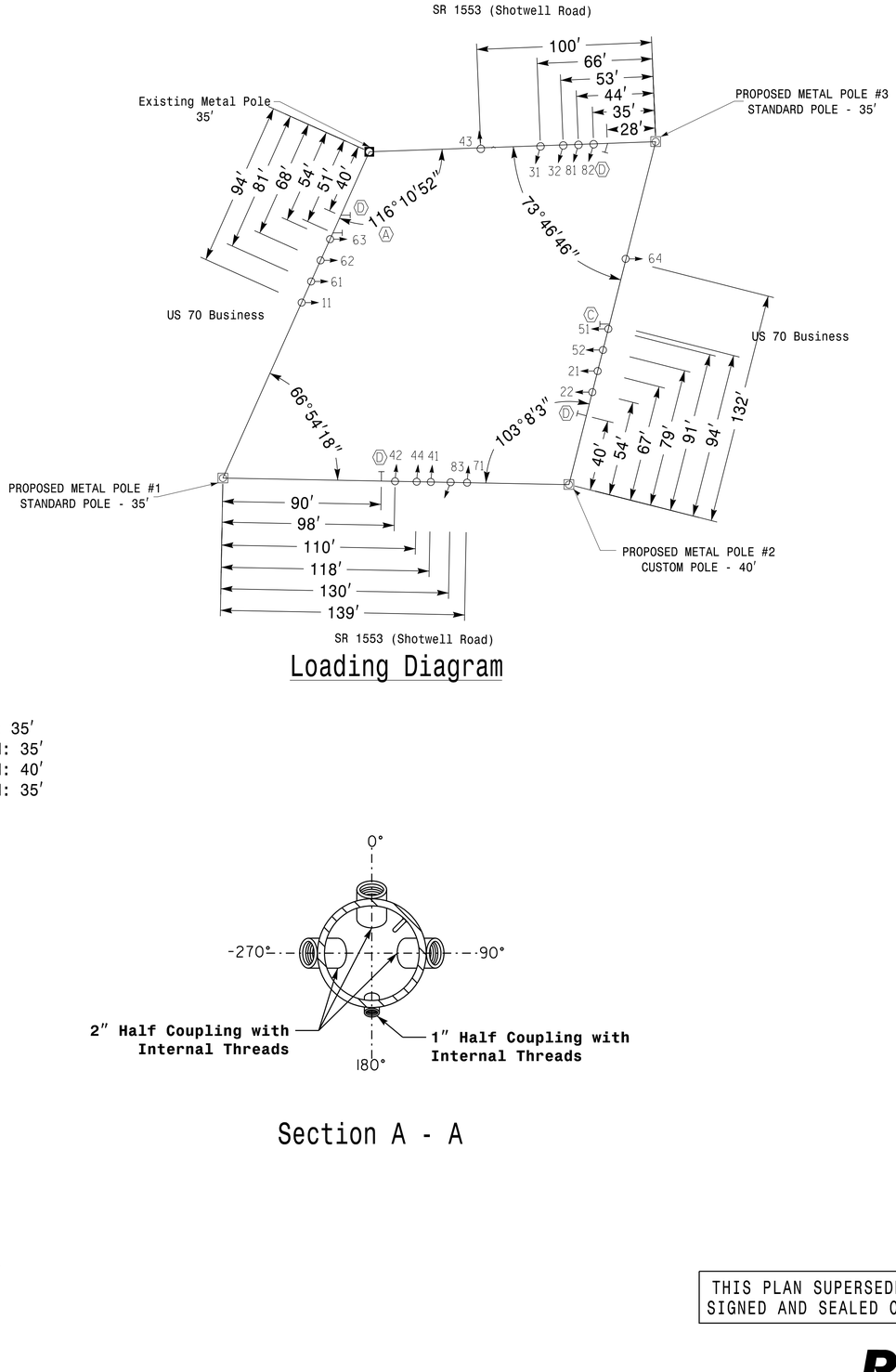

Loading Diagram

Section A - A

NOTES

1. Design the traffic signal structure and foundation in accordance with:
   - *The 6th Edition 2013 AASHTO "Standard Specifications for Structural Supports for Highway Signs, Luminaires, and Traffic Signals, including all of the latest interim revisions.
   - *The 2018 NCDOT "Standard Specifications for Roads and Structures." The latest addenda to the specifications can be found in the traffic signal project special provisions.
   - *The 2018 NCDOT Roadway Standard Drawings.
   - *The traffic signal project plans and special provisions.
   - *The NCDOT "Metal Pole Standards" located at the following NCDOT website: https:/connect.ncdot.gov/resources/safety/pages/ITS-Design-Resources.aspx
2. Fabricate Metal Poles #1, #2, and #3 using design loadings shown. The contractor may revise attachment heights and radial orientations of wire entrances with approval from the Division Traffic Engineer. Any modifications to the original location of accessories must be reflected on the shop drawings when they are submitted for review and approval.
3. Design a drilled pier foundation that conforms to the requirements of ITSS Project Special Provisions (Version 18.2) included with and as part of these plans.

LOADING SCHEDULE FOR STRAIN POLES

HEAD	DESCRIPTION	AREA	SIZE	WEIGHT
11 21, 22 31, 32 41, 43, 44* 51, 52 61, 62, 63, 64 71 81, 82, 83	SIGNAL HEAD 12″ – 3 SECTION–WITH BACKPLATE, HANGER, AND BALANCE ADJUSTER	9.2 S.F.	25.5″ W X 52.0″ L	56 LBS
42*	SIGNAL HEAD 12″ – 4 SECTION (VERTICAL) –WITH BACKPLATE, HANGER, AND BALANCE ADJUSTER	11.6 S.F.	25.5″ W X 65.5″ L	69 LBS
Ⓐ	"LANE ENDS 2000 FT" SIGN WITH HANGER	7.5 S.F.	30.0″ W X 36.0″ L	14 LBS
Ⓒ	R10–16 SIGN WITH HANGER	7.5 S.F.	30.0″ W X 36.0″ L	14 LBS
Ⓓ	STREET NAME SIGN WITH HANGER	16.0 S.F.	24.0″ W X 96.0″ L	36 LBS

*4–SECTION FYA (42) AND ADDITIONAL 3–SECTION HEAD (44) WORST CASE LOADING CONDITION

LOADING DIAGRAM:
EXISTING METAL POLE
PROPOSED METAL POLES 1, 2, AND 3

DOCUMENT NOT CONSIDERED FINAL UNLESS ALL SIGNATURES COMPLETED

THIS PLAN SUPERSEDES THE PLAN SIGNED AND SEALED ON 2/22/2019

RS&H
8521 SIX FORKS ROAD, SUITE 400
RALEIGH, NC 27615
(919) 926-4100

Prepared for the Office of:
Transportation Mobility and Safety Division
STATE OF NORTH CAROLINA • DEPARTMENT OF TRANSPORTATION
Intelligent Transportation Systems Section
750 N. Greenfield Pkwy., Garner, NC 27529

US 70 Business
at
SR 1533 (Shotwell Road)

Division 4 Johnston County Clayton

PLAN DATE:	February 2019	REVIEWED BY:	J. Townsend
PREPARED BY:	S.G. Haynie	REVIEWED BY:	-

REVISIONS	INIT.	DATE

SEAL
NORTH CAROLINA PROFESSIONAL SEAL 029531 ENGINEER STEVEN G. HAYNIE
DocuSigned by: Steve Haynie 0E53CCDCA3C4498...
SIGNATURE 10/26/2021 DATE

Sig. Inventory No. 04-1086

10/26/2021
3:40:08 PM
Traffic\Signals\Design\System\New Plansheets\W-5704B_sig_psh_1-2.dgn
Steven G. Haynie

PROJECT I.D. NO.	SHEET NO.
80074	Sig.M1

STATE OF NORTH CAROLINA
DIVISION OF HIGHWAYS

STANDARD DRAWINGS FOR ALL METAL POLES

POLE STANDARDS

NCDOT METAL P

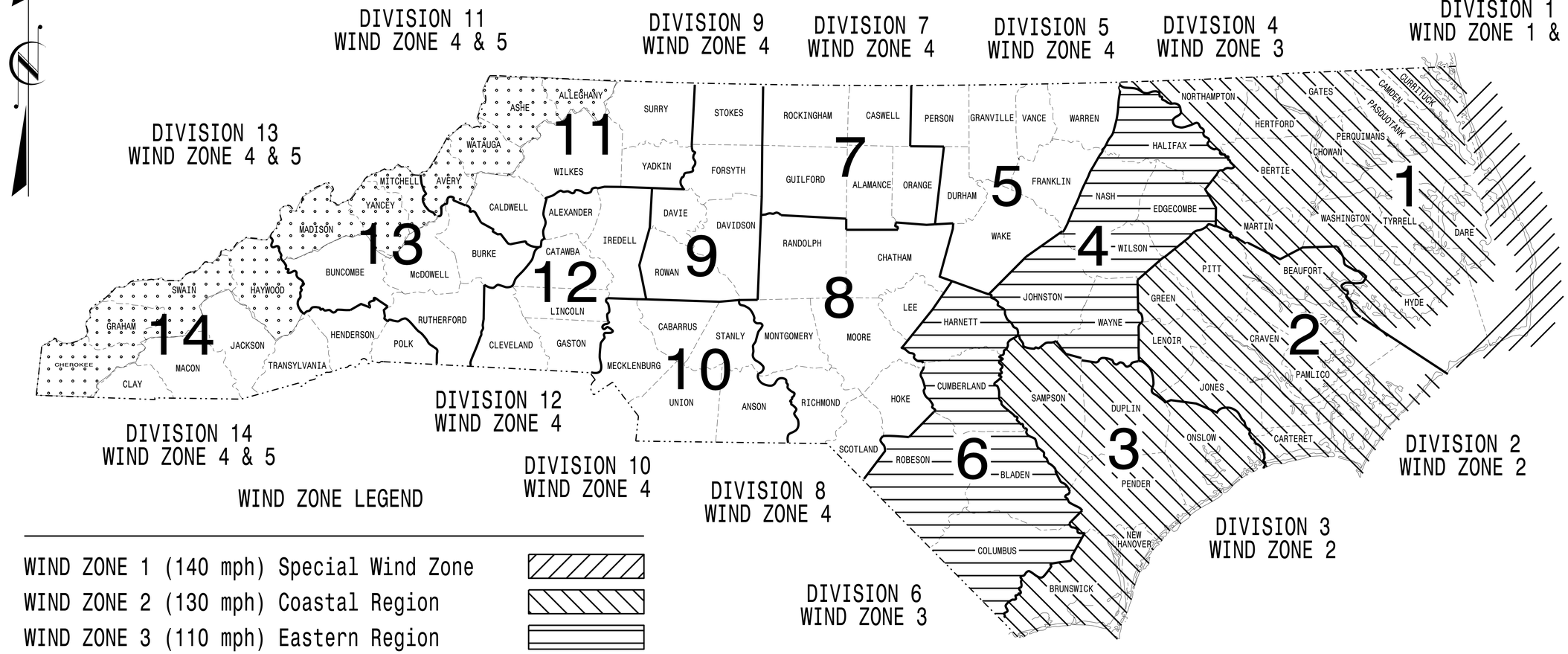

WIND ZONE LEGEND

WIND ZONE 1 (140 mph) Special Wind Zone	
WIND ZONE 2 (130 mph) Coastal Region	
WIND ZONE 3 (110 mph) Eastern Region	
WIND ZONE 4 (90 mph) Central & Mtn. Region	
WIND ZONE 5 (120 mph) Special Wind Zone	

https://connect.ncdot.gov/resources/safety/Pages/ITS-Design-Resources.aspx

Prepared In the Offices of:

Transportation Mobility and Safety Division
Signal Design Section
STATE OF NORTH CAROLINA · DEPARTMENT OF TRANSPORTATION

750 N.Greenfield Pkwy.
Garner,NC 27529

Designed in conformance with the latest 2015 Interim to the 6th Edition 2013

AASHTO

Standard Specifications for Structural Supports for Highway Signs, Luminaires, and Traffic Signals

INDEX OF PLANS

DRAWING NUMBER	DESCRIPTION
Sig. M 1	Statewide Wind Zone Map
Sig. M 2	Typical Fabrication Details–All Metal Poles
Sig. M 3	Typical Fabrication Details–Strain Poles
Sig. M 4	Typical Fabrication Details–Mast Arm Poles
Sig. M 5	Typical Fabrication Details–Mast Arm Connection
Sig. M 6	Typical Fabrication Details–Strain Pole Attachments
Sig. M 7	Construction Details–Foundations
Sig. M 8	Standard Strain Pole Foundation–All Soil Conditions

NCDOT CONTACTS:

MOBILITY AND SAFETY DIVISION – ITS AND SIGNALS UNIT

M.M. MCDIARMID, P.E. – STATE ITS AND SIGNALS ENGINEER

J. P. GALLOWAY, P.E. – STATE SIGNALS ENGINEER

D.C. SARKAR, P.E. – ITS AND SIGNALS SENIOR STRUCTURAL ENGINEER

SEAL

NORTH CAROLINA PROFESSIONAL SEAL 028094 ENGINEER DEBESH C. SARKAR

DocuSigned by: Debesh C. Sarkar 44E8E3... SIGNATURE

10/11/2017 DATE

PROJECT ID. NO.	SHEET NO.
80074	Sig.M2

Fabrication Details – All Metal Poles

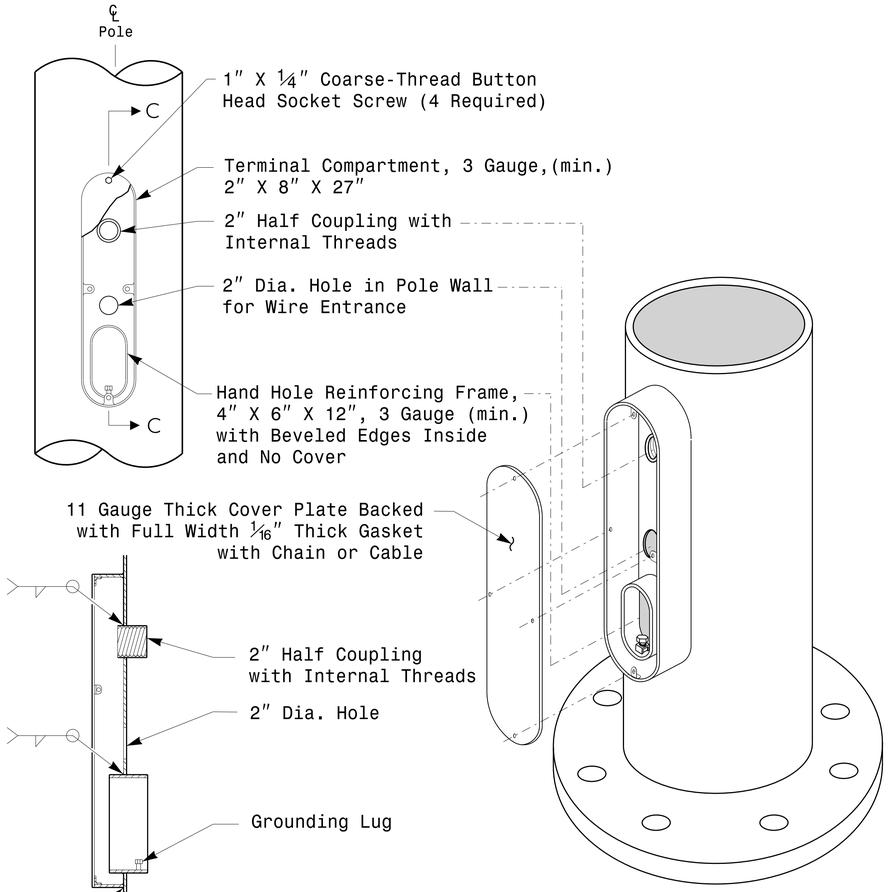

Section C-C

Note: Unless otherwise specified, locate Terminal Compartment 1 foot above the pole base plate at 180 degrees on the pole's radial index.

Terminal Compartment Detail

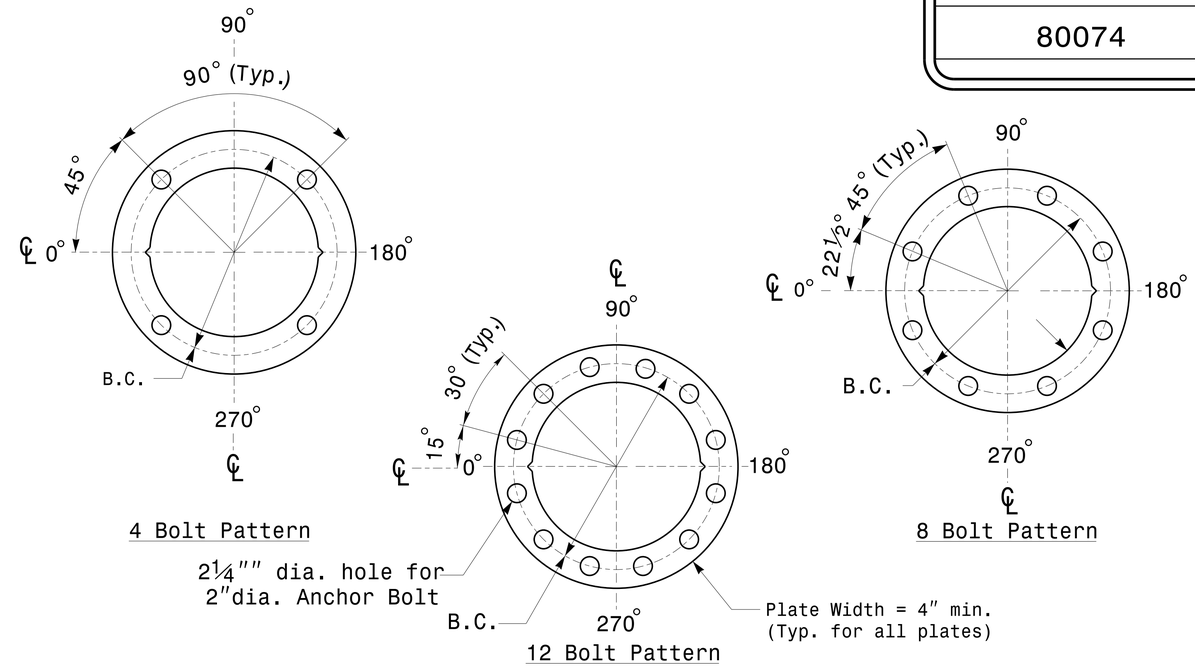

Construct Templates and Plates from ¼" min. thick Steel. Galvanizing is not required.

Base Plate Template and Anchor Bolt Lock Plate Details

MFG _____ MFG. DATE: MM/YY
SHAFT D/T/L/Y ----/----/----/----
ARM-A D/T/L/Y ----/----/----/----
----/----/----/----
ARM-B D/T/L/Y ----/----/----/----
----/----/----/----
A.B. DIA./B.C./L/Y ----/----/----/----
NCDOT SIG. INV. NO. _____
NCDOT POLE NO. _____

Shaft I.D. Tag
(Provide on Shaft of Strain Poles and Mast Arm Poles Shaft)

MFG _____ MFG. DATE: MM/YY
SECTION D/T/L/Y ----/----/----/----
NCDOT SIG. INV. NO. _____
NCDOT POLE NO. _____

Arm I.D. Tag
(Provide on each section of a multi-section mast arm.)

Notes:
1) D= Diameter, T= Thickness, L= Length, Y= Yield Strength
2) A.B. = Anchor Bolt
3) B.C. = Bolt Circle of Anchor Bolts
4) If Custom Design, use "NCDOT STANDARD" line for Signal Inv. Number and pole I.D. number
5) See drawing M3 and M4 for mounting positions of I.D. tags.

Identification Tag Details

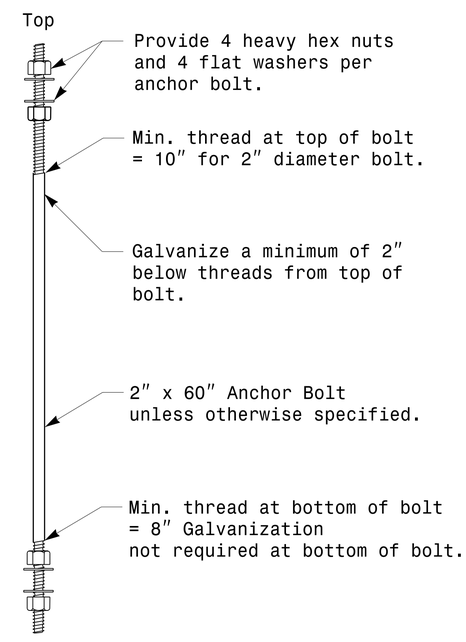

Anchor Bolt Detail

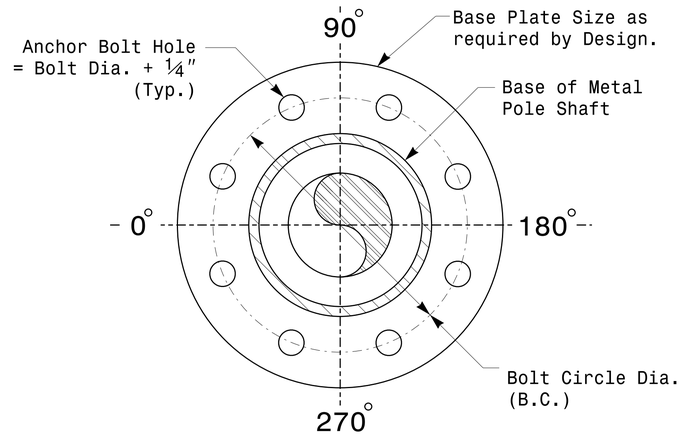

Note: Base plate may be circular,octagonal,square or rectangular in shape.

Typical Base Plate Detail

Prepared in the Offices of:
Transportation Mobility and Safety Division
Signal Design Section
750 N.Greenfield Pkwy,Garner,NC 27529

SCALE
0 NA
NONE

Typical Fabrication Details For All Metal Poles

PLAN DATE:	OCTOBER 2017	DESIGNED BY:	C.F.ANDREWS
PREPARED BY:	N. BITTING	REVIEWED BY:	D.C. SARKAR

REVISIONS	INIT.	DATE

SEAL
NORTH CAROLINA PROFESSIONAL SEAL 028094 ENGINEER DEBESH C. SARKAR

DocuSigned by: Debesh C. Sarkar
SIGNATURE
10/11/2017
DATE

11-OCT-2017 08:30
S:\ITS&SU\ITS Signals\Signal Design Section\Eastern Region\MM Sheets\2016\2014 Sig.M2 Std. Fabrication Details-All Poles..dgn
rnzinser

PROJECT ID. NO.	SHEET NO.
80074	Sig.M3

Details – Strain Poles

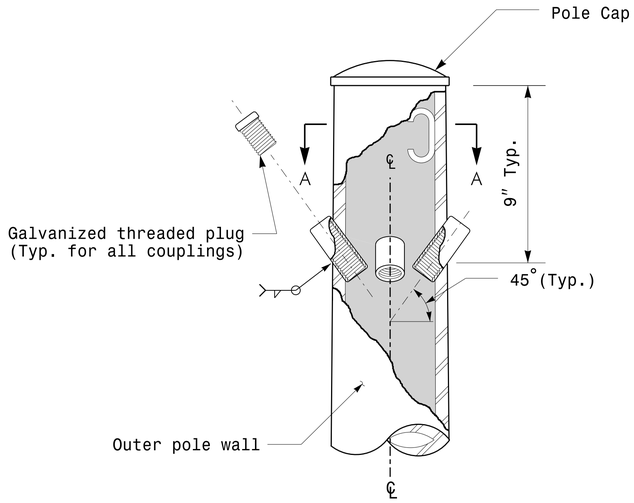

Cable Entrances at Top of Pole

Note:
1. Opening in pole base plate shall be equal to pole base inside diameter minus 3½" but shall not be less than 8½".

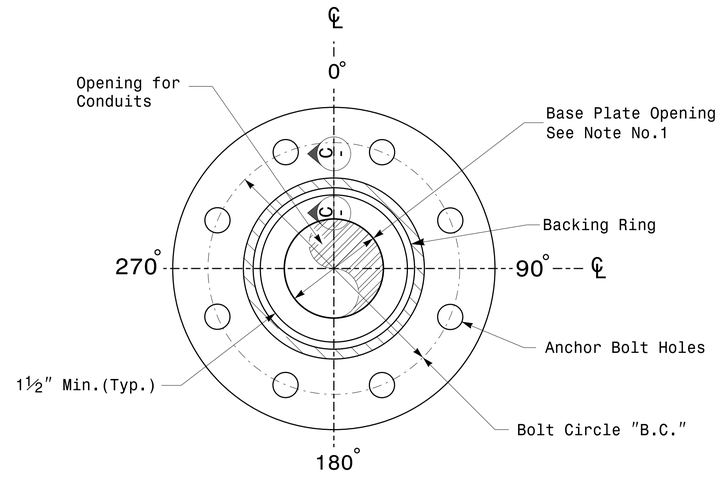

Section B-B

Pole Base Plate Details
(8 and 12 Bolt Pattern)

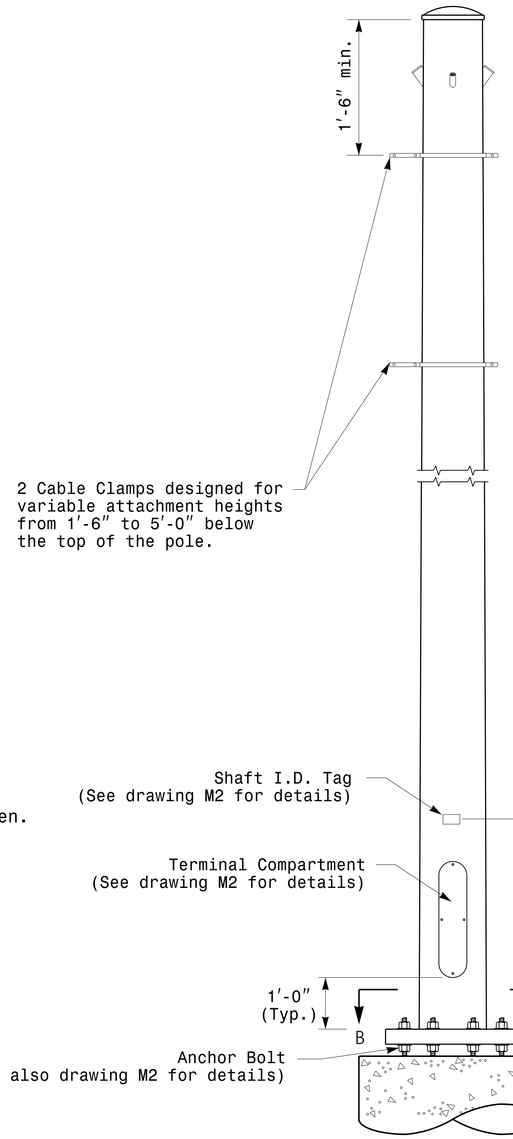

Monotube Strain Pole

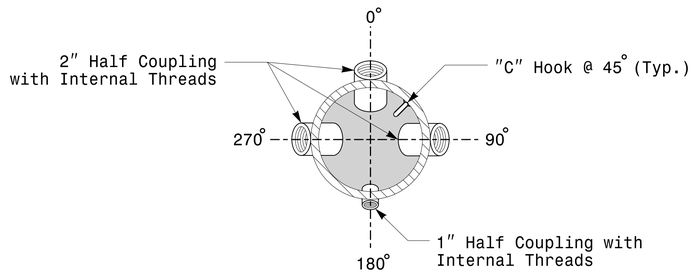

Section A-A

Radial Orientation for Factory Installed
Accessories at Top of Pole

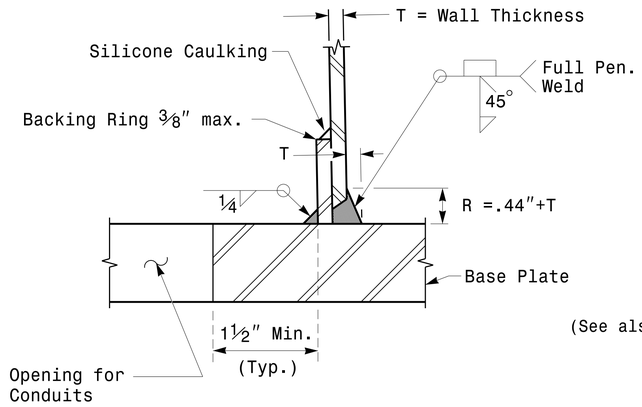

Section C-C
(Pole Attachment to Base Plate)

Full-Penetration
Groove Weld Detail

Prepared in the Offices of:
Transportation Mobility and Safety Division
Traffic Engineering Branch
Signal Design Section
750 N.Greenfield Pkwy,Garner,NC 27529

Typical Fabrication Details
For
Strain Poles

PLAN DATE:	OCTOBER 2017	DESIGNED BY:	K.C.DURIGON
PREPARED BY:	N. BITTING	REVIEWED BY:	D.C. SARKAR

REVISIONS	INIT.	DATE

SCALE
0 NA
NONE

SEAL
NORTH CAROLINA
PROFESSIONAL
SEAL
028094
ENGINEER
DEBESH C. SARKAR

DocuSigned by:
Debesh C. Sarkar
44EBE3B3D9A74FF...
SIGNATURE

10/11/2017
DATE

11-OCT-2017 08:25
S:*ITS&SW*ITS Signals*Signal Design Section\Eastern Region\MJ Sheets\2016\2014 Sig-M3 Std. Fabrication Details-Strain Poles.dgn
rmathisdgn

PROJECT ID. NO.	SHEET NO.
80074	Sig.M4

Fabrication Details – Mast Arm Poles

Note:
1. Opening in pole base plate shall be equal to pole base inside diameter minus 3½" but shall not be less than 8½".

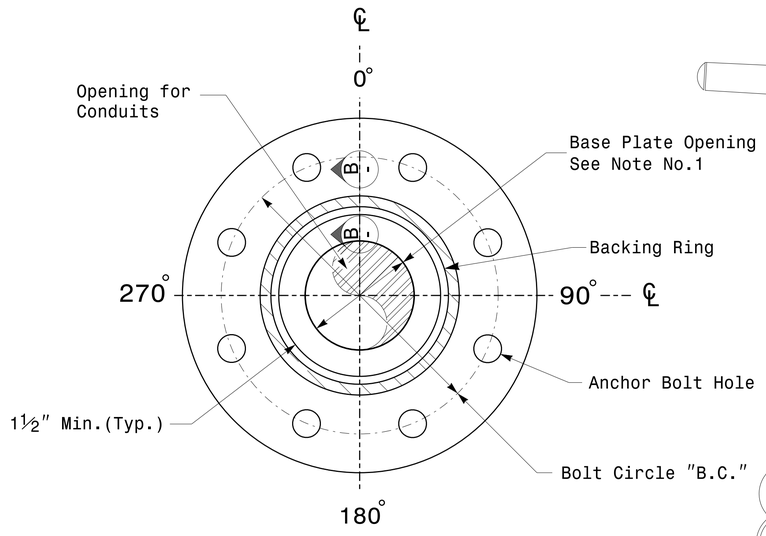

Section A-A

Pole Base Plate Details

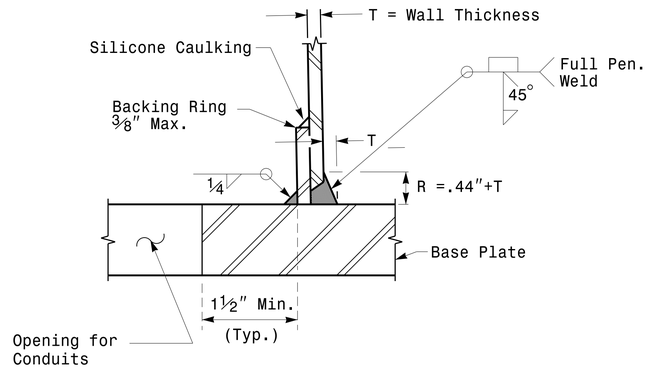

Section B-B

(Pole Attachment to Base Plate)

Full-Penetration Groove Weld Detail

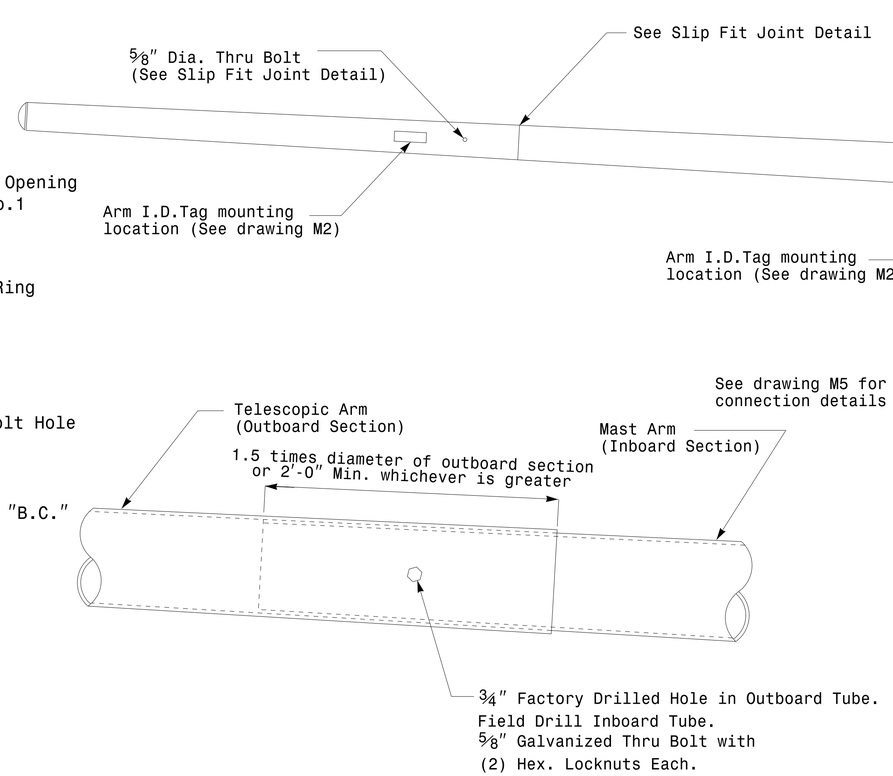

Slip Fit Joint Detail for Mast Arm

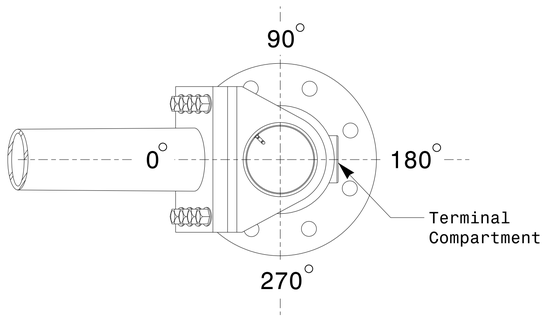

Mast Arm Radial Orientation

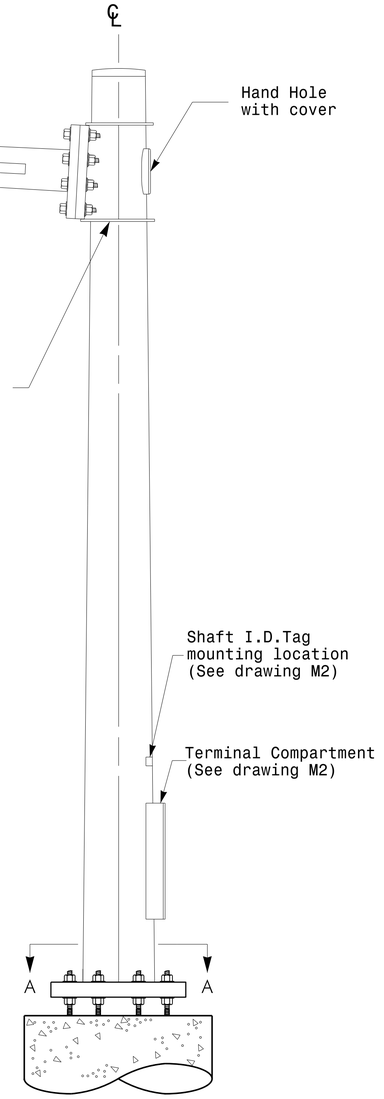

Mast Arm Pole

Prepared in the Offices of:
Transportation Mobility and Safety Division
NORTH CAROLINA DEPARTMENT OF TRANSPORTATION
Signal Design Section
750 N.Greenfield Pkwy.Garner,NC 27529

SCALE: 0 NA — NONE

Typical Fabrication Details For Mast Arm Poles

PLAN DATE:	OCTOBER 2017	DESIGNED BY:	K.C.DURIGON
PREPARED BY:	N. BITTING	REVIEWED BY:	D.C. SARKAR

REVISIONS	INIT.	DATE

SEAL
NORTH CAROLINA PROFESSIONAL SEAL 028094 ENGINEER DEBESH C. SARKAR

DocuSigned by: Debesh C. Sarkar 44EBE3B5B5A47...
SIGNATURE

10/11/2017
DATE

11-OCT-2017 08:33
S:\TTSAS\ITS Signals\Signal Design Section\Eastern Region\M Sheets\2016\2014 Sig.M4 Std. Fabrication Details-Mast Arm Poles.dgn
rstidham

Welded Ring Stiffened Mast Arm Connection

PROJECT ID. NO.	SHEET NO.
80074	Sig.M5

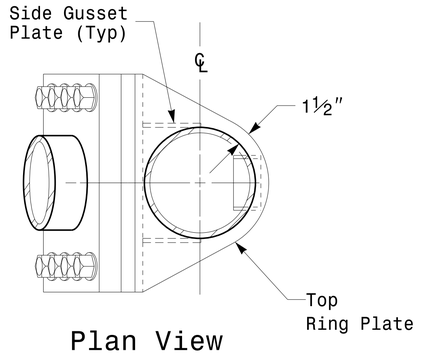

Plan View

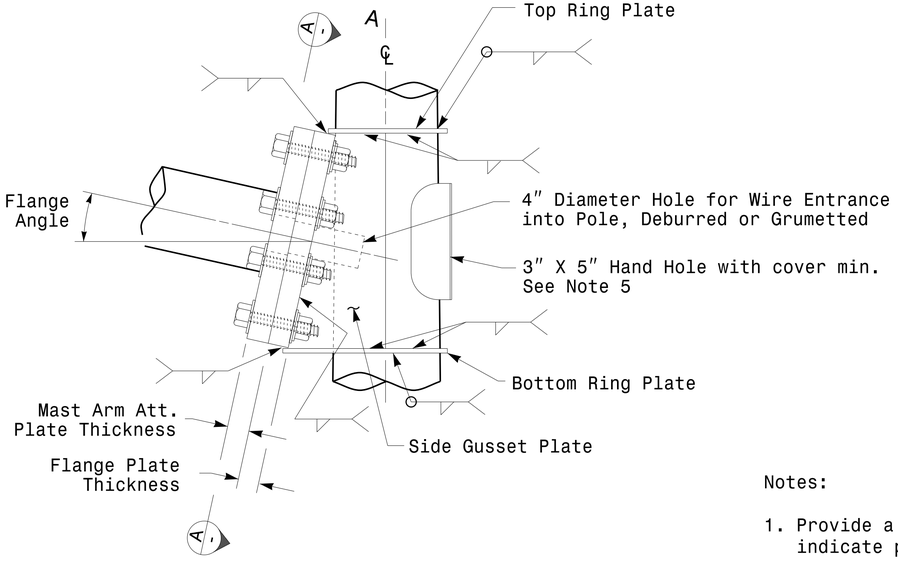

Side Elevation View

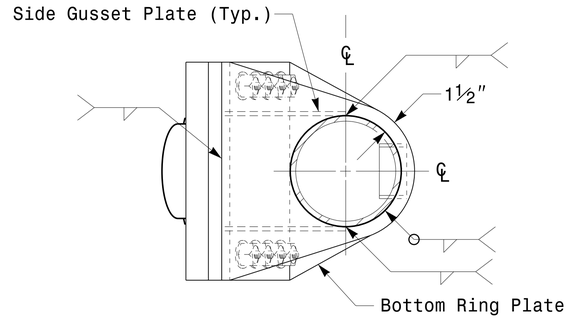

Bottom View

Notes:

1. Provide a permanent means of identification above the mast arm to indicate proper attachment orientation of the mast arm.
2. Designer will determine the size of all structural components, plates, fasteners, and welds shown unless they are already specified.
3. Fabricator is responsible for providing appropriate holes at drainage points to drain galvanizing materials.
4. For minimum edge distance follow AISC Table J3.4 and J3.5. For nominal bolt hole size use Table J3.3.
5. Provide upper handhole as necessary when shaft extensions are reguired for luminaire arms or camera. For poles without luminaires/camera, wiring can be done through the top of pole.
6. Allowable range of flange tilt angle will vary from 0° to as required.

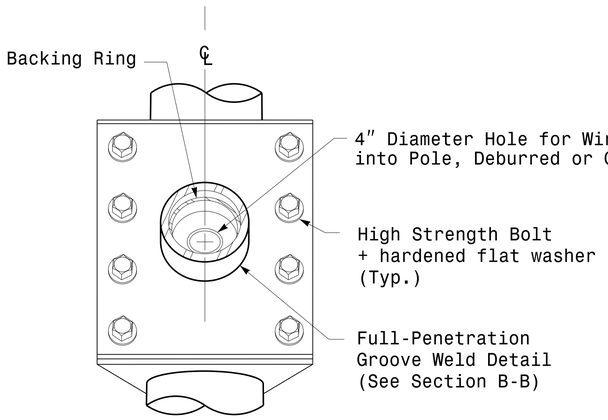

Front Elevation View

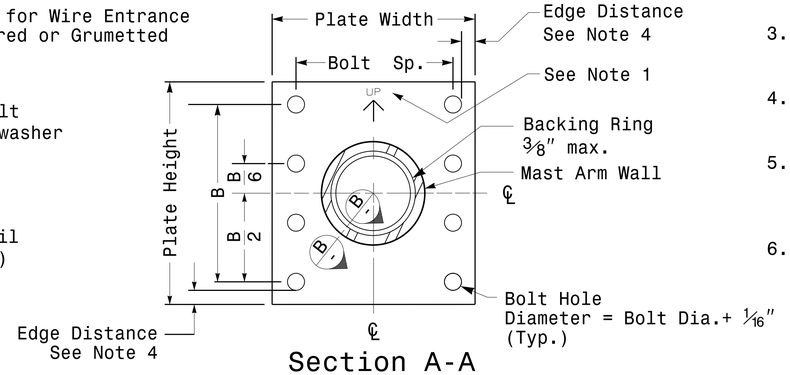

Section A-A

Mast Arm Attachment Plate

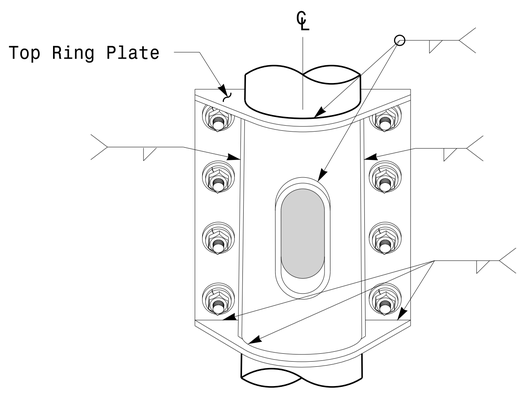

Back Elevation View

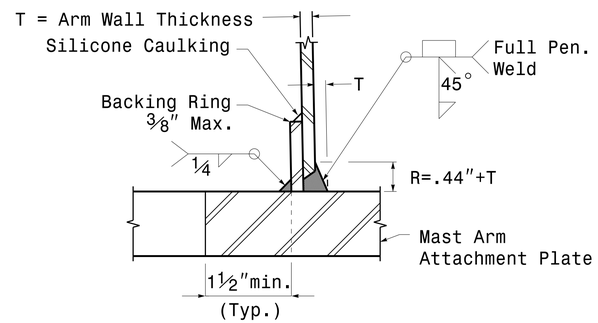

Section B-B

Full-Penetration Groove Weld Detail

Prepared in the Offices of:
Transportation Mobility and Safety Division
Signal Design Section
750 N.Greenfield Pkwy.Garner,NC 27529

Typical Fabrication Details For Mast Arm Connection To Pole

PLAN DATE:	OCTOBER 2017	DESIGNED BY:	C.F.ANDREWS
PREPARED BY:	N. BITTING	REVIEWED BY:	D.C. SARKAR

REVISIONS	INIT.	DATE

SCALE 0 NA NONE

SEAL
NORTH CAROLINA PROFESSIONAL SEAL 028094 ENGINEER DEBESH C. SARKAR

DocuSigned by: Debesh C. Sarkar 44EBE3E5A0A44... SIGNATURE

10/11/2017 DATE

Fabrication Details — Mast Arm Connection

11-OCT-2017 08:35
Sc#1TS&SU#ITS Signal#Signal Design Section#Eastern Region#M Sheets#2016#2014 Sig.M5 Std. Connection Fabrication Details-Mast Arm Poles.dgn
rsilfuser

PROJECT ID. NO.	SHEET NO.
80074	Sig.M6

Fabrication Details – Strain Pole Attachments

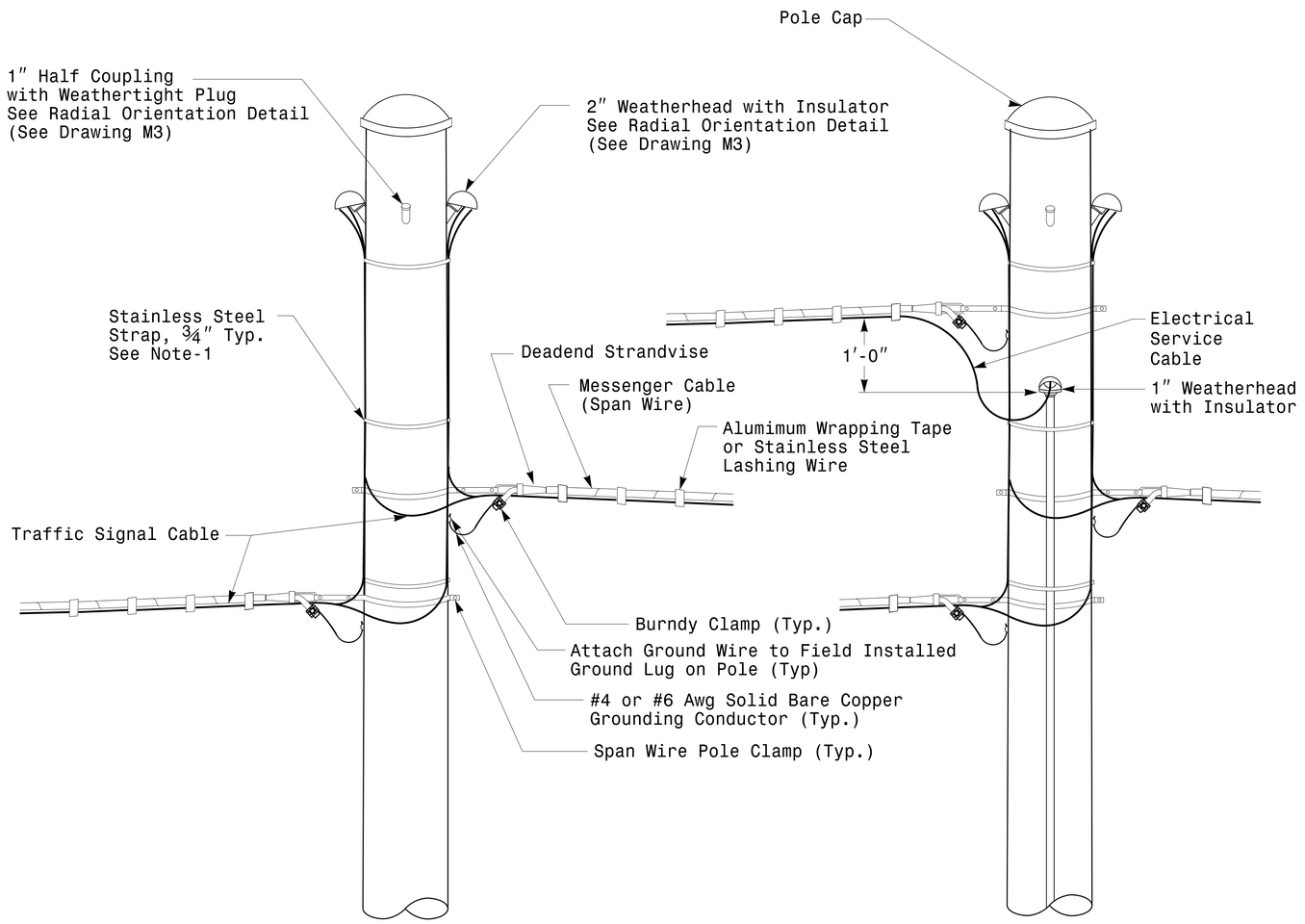

Strain Pole Attachments

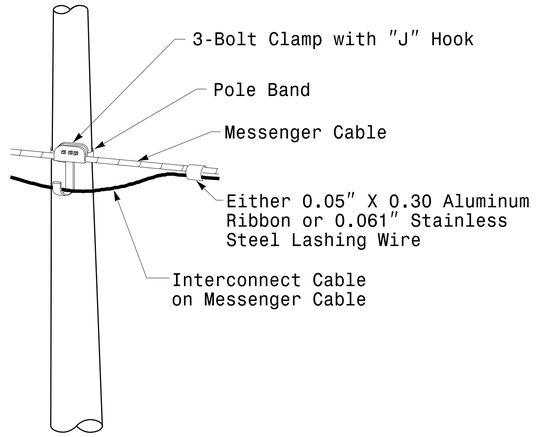

Attachment of Cable to Intermediate Metal Pole

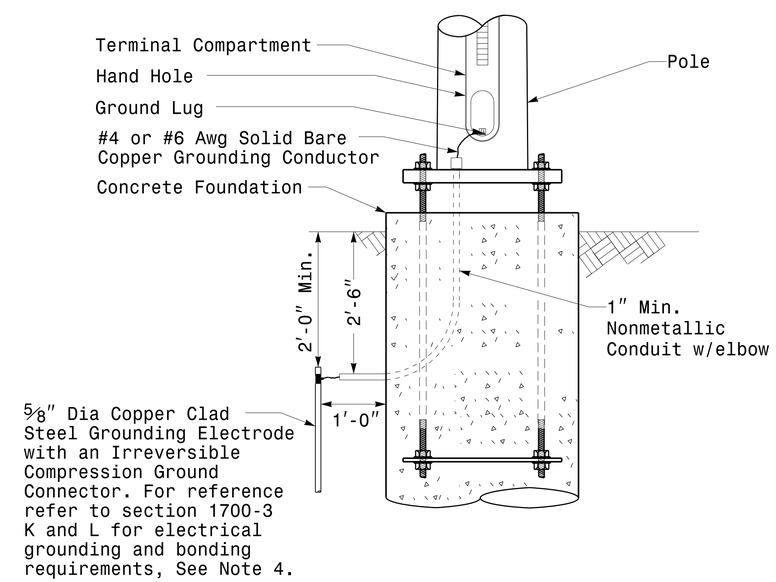

Metal Pole Grounding Detail For Strain Pole and Mast Arm

NOTE:

1. Strap all signal cables to the side of the pole with ¾" stainless steel straps when the distance between the spanwire attachment clamp and the weatherheads exceeds 3'-0".
2. Provide minimum two spanwire pole clamps per pole.
3. It is prohibited to attach two span wires at one pole clamp.
4. For general requirements refer to NCDOT Standard Specifications for Roadway and Structures, January 2018.

Prepared in the Offices of:
Transportation Mobility and Safety Division
Signal Design Section
750 N.Greenfield Pkwy.Garner.NC 27529

SCALE
0 NA
NONE

Typical Fabrication Details For Strain Pole Attachments

PLAN DATE:	OCTOBER 2017	DESIGNED BY:	C.F.ANDREWS
PREPARED BY:	N. BITTING	REVIEWED BY:	D.C. SARKAR

REVISIONS	INIT.	DATE

SEAL
NORTH CAROLINA PROFESSIONAL SEAL 028094 ENGINEER DEBESH C. SARKAR

DocuSigned by: Debesh C. Sarkar
SIGNATURE
10/11/2017
DATE

11-OCT-2017 08:36
S:\ITS&SU\ITS Signals\Signal Design Section\Eastern Region\M Sheets\2016\2014 Sig.M6 Std. Fabrication Details-Strain Poles.dgn
rnzinser

PROJECT ID. NO.	SHEET NO.
80074	Sig.M7

Construction Details – Foundations

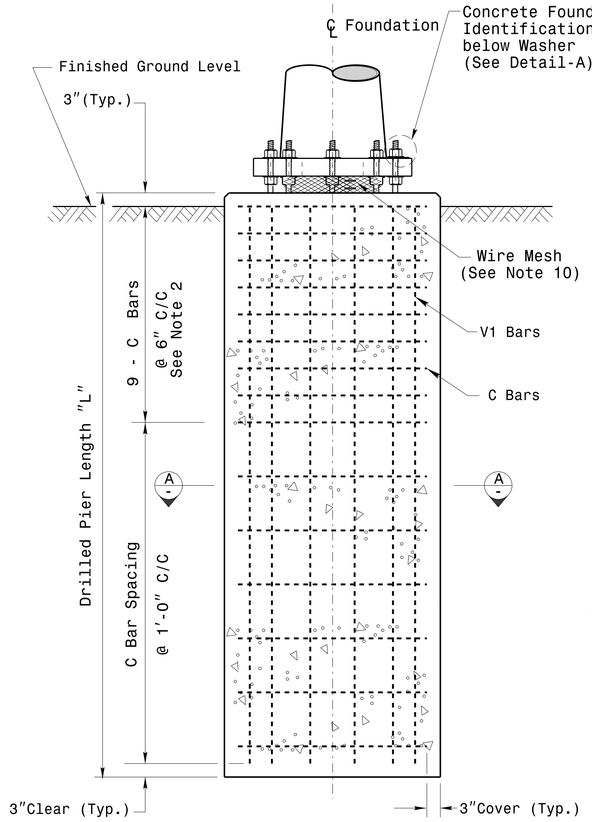

Concrete Shaft Elevation

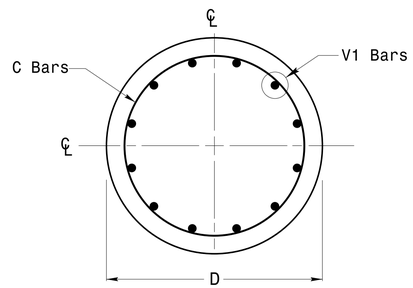

Section A-A

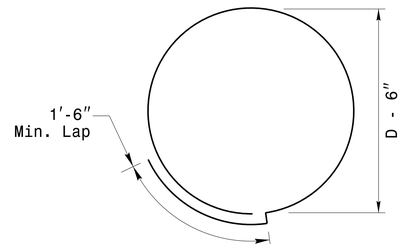

Typical "C" Bar Detail

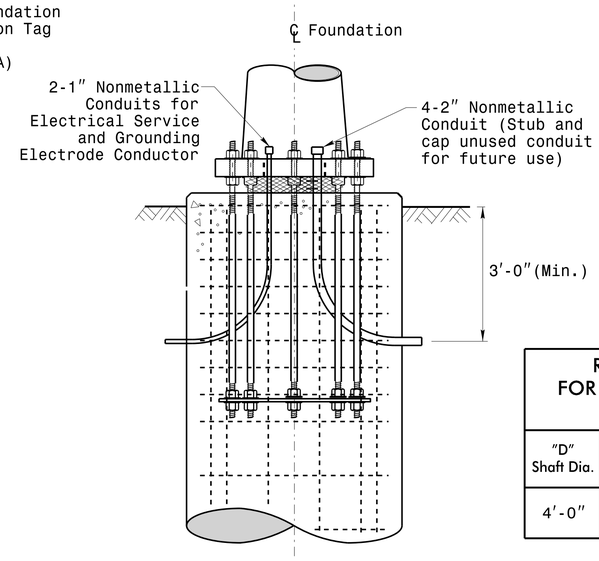

Typical Foundation Conduit Details

REINFORCING STEEL TABLE FOR STANDARD DRILL PIER SHAFT (4′–0″ DIAMETER)						
"D" Shaft Dia.	Conc. Volume (cu. yds.)	Bar Name	MIN.	Size	Type	Length
4′-0″	.465 x L	V1	—	#8	STR.	**
		C	*	#4	CIR.	12′-6″

* See Note No. 2
** See Note No. 3

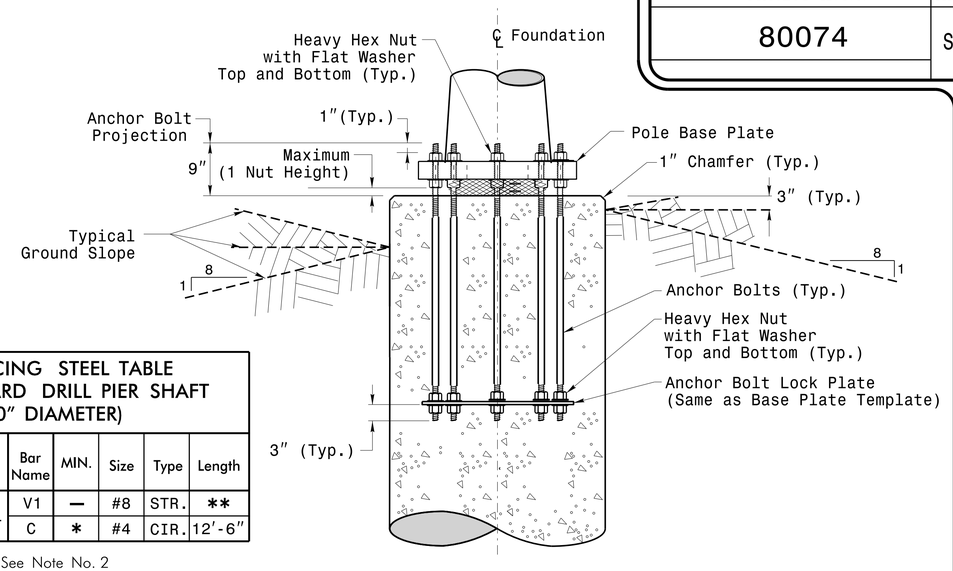

Typical Foundation Anchor Bolt Details

(Reinforcing Cage Not Shown for Clarity)

General Notes:

1. If actual subsurface conditions differ significantly from boring data contact the Engineer before excavating or placing concrete.
2. Circular tie reinforcing rings may be vertically adjusted by +/-3″ at a depth between 2′-0″ and 3′-0″ to facilitate the installation of electrical conduit entering in the cage.
3. For standard foundations, see sheet Sig. M8 for details. Vertical reinforcing bars (V1) may be horizontally adjusted by +/-3″ to facilitate the installation of electrical conduit entering into the cage.
4. Provide 2″ to 5″ foundation projection above ground level depending on the ground slope.
5. Unless otherwise shown, foundation designs are based on non-sloping level ground surfaces with slope ratios of 8:1 (H:V) or flatter. If actual ground line slopes are steeper contact the Engineer before excavating or placing concrete.
6. Construct foundations in accordance with NCDOT Standard Provisions SP09 R005- Foundations and Anchor Rod Assemblies for Metal Poles. All applicable 2018 NCDOT Standard Specifications are referenced in this provision. Refer to the NCDOT Resources/Specifications page located on the Connect NCDOT website.

   https://connect.ncdot.gov/resources/Specifications and Special Provisions.aspx
7. Use air entrained AA concrete mix with a compression strength of f′c=4500 psi.(min.) after 28 days.
8. Use ASTM A615 grade 60 deformed bars for all reinforcing steel. Maintain at least 3″ cover on all reinforcement.
9. Locate the Identification Tag on the top of the base plate, directly above the conduit's entry point.
10. Provide two layers of galvanized welded 23 gauge (0.25) 6″ wide 4 mesh wire around pipes under the base plate and secure it with ties if necessary.
11. Preferred location for the I.D. Tag is as shown in Detail-A; directly above the conduit entering the foundation.

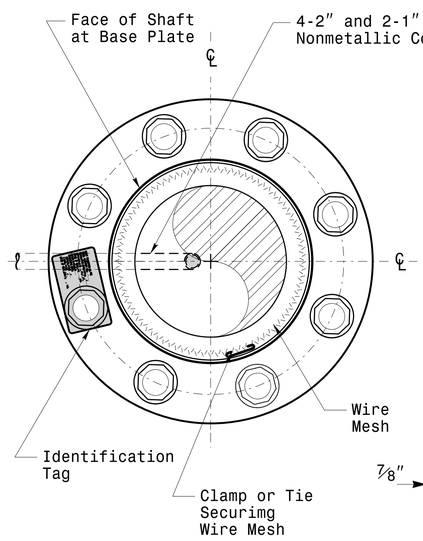

D = Diameter
L = Length/Depth
mm = Month
yy = Year

Detail-A

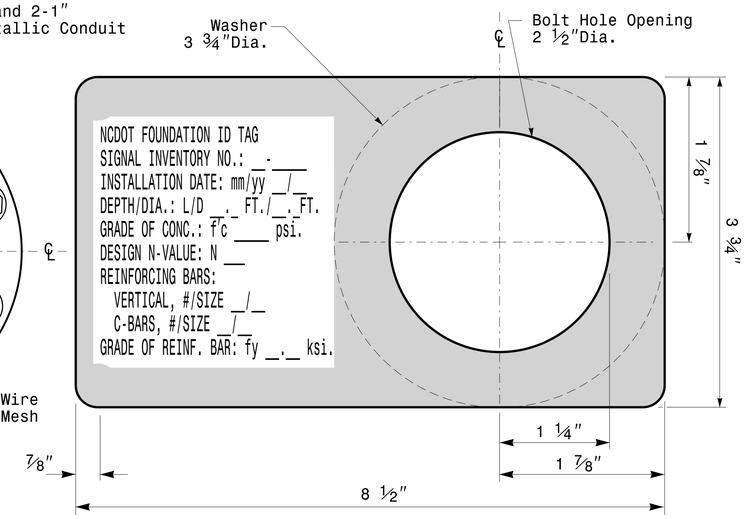

Concrete Foundation Identification Tag Details

Prepared in the Offices of:
Transportation Mobility and Safety Division
Signal Design Section
750 N.Greenfield Pkwy.Garner,NC 27529

Construction Details For Foundations			
PLAN DATE:	OCTOBER 2018	DESIGNED BY:	C.B.COGDELL
PREPARED BY:	N. BITTING	REVIEWED BY:	D.C. SARKAR

REV. NO.	COMMENTS	INIT.	DATE
1	Revised Foundation Tag Details	N.B.	5/11/2015

SCALE: 0 NA — NONE

SEAL
NORTH CAROLINA PROFESSIONAL SEAL 028094 ENGINEER DEBESH C. SARKAR

DocuSigned by: Debesh C. Sarkar 4AE8E3D5SIGNATURE — 10/11/2017 DATE

11-OCT-2017 08:37
S:\ITS&SU\ITS Signals\Signal Design Section\Eastern Region\MS Sheets\2016\2014 Sig.M7 Std. Construction Details-Strain Poles.dgn
rgardner

SOIL CONDITION

PROJECT ID. NO.	SHEET NO.
80074	Sig.M8

		STANDARD STRAIN POLES						STANDARD FOUNDATIONS 48″ Diameter Drilled Pier Length (L) – Feet							Reinforcement			
					Reactions at the Pole Base			Clay				Sand			Longitudinal		Stirrups	
		Case No.	Pole Height (Ft.)	Base Plate BC (In.)	Axial (kip)	Shear (kip)	Moment (ft-kip)	Medium N-Value 4–8	Stiff N-Value 9–15	Very Stiff N-Value 16–30	Hard N-Value >30	Loose N-Value 4–10	Medium N-Value 11–30	Dense N-Value >30	Bar Size (#)	Quantity (ea.)	Bar Size (#)	Spacing (in.)
WIND ZONE 1	LIGHT	S26L3	26	25	2	11	270	19	13	10	8	17	14.5	12.5	8	12	4	12
		S30L3	30	25	2	11	300	19.5	13.5	10	8	17.5	15	13	8	14	4	12
		S35L3	35	25	3	11	320	20	13.5	10.5	8	17.5	15	13	8	14	4	12
	HEAVY	S30H3	30	29	3	16	450	24.5	16	12	9	21	17.5	15	8	16	4	6
		S35H3	35	29	4	16	515	26	17	12.5	9.5	22	18.5	16	8	16	4	6
WIND ZONE 2	LIGHT	S26L2	26	23	2	10	245	18	12.5	9.5	8	16.5	14	12	8	12	4	12
		S30L2	30	23	2	10	270	18.5	12.5	10	8	16.5	14	12.5	8	12	4	12
		S35L2	35	23	3	10	300	19.5	13	10	8	17	14.5	13	8	12	4	12
	HEAVY	S30H2	30	29	3	15	415	23	15.5	11.5	9	20	17	14.5	8	16	4	6
		S35H2	35	29	4	15	475	25	16.5	12	9.5	21	17.5	15.5	8	16	4	6
WIND ZONE 3	LIGHT	S26L2	26	23	2	10	245	18	12.5	9.5	8	16.5	14	12	8	12	4	12
		S30L2	30	23	2	10	270	18.5	12.5	10	8	16.5	14	12.5	8	12	4	12
		S35L2	35	23	3	10	300	19.5	13	10	8	17	14.5	13	8	12	4	12
	HEAVY	S30H2	30	29	3	15	415	23	15.5	11.5	9	20	17	14.5	8	16	4	6
		S35H2	35	29	4	15	475	25	16.5	12	9.5	21	17.5	15.5	8	16	4	6
WIND ZONE 4	LIGHT	S26L1	26	22	2	8	190	16	11.5	8.5	8	15	12.5	11	8	12	4	12
		S30L1	30	22	2	8	205	16.5	11.5	9	8	15	13	11.5	8	12	4	12
		S35L1	35	22	3	8	230	17	12	9	8	15.5	13.5	11.5	8	12	4	12
	HEAVY	S30H1	30	25	3	12	320	20.5	13.5	10.5	8	18	15	13.5	8	16	4	6
		S35H1	35	25	4	12	350	21	14	10.5	8.5	18.5	15.5	13.5	8	16	4	6
WIND ZONE 5	LIGHT	S26L2	26	23	2	10	245	18	12.5	9.5	8	16.5	14	12	8	12	4	12
		S30L2	30	23	2	10	270	18.5	12.5	10	8	16.5	14	12.5	8	12	4	12
		S35L2	35	23	3	10	300	19.5	13	10	8	17	14.5	13	8	12	4	12
	HEAVY	S30H2	30	29	3	15	415	23	15.5	11.5	9	20	17	14.5	8	16	4	6
		S35H2	35	29	4	15	475	25	16.5	12	9.5	21	17.5	15.5	8	16	4	6

48″ Dia. Foundations Concrete Volume (cubic yards) = (0.465) x Drilled Pier Length

General Notes:

1. Values shown in the "Reactions at the Pole Base" column represent the minimum acceptable capacity allowed for design using a design CSR of 1.00.
2. Use chairs and spacers to maintain proper clearance.
3. For foundation, always use air-entrain concrete mix.

Foundation Selection:

1. Perform a standard penetration test at each proposed foundation site to determine "N" value.
2. Select the appropriate wind zone from M 1 drawing.
3. Select the soil type (Clay or Sand) that best describes the soil characteristics.
4. Get the appropriate standard pole case number from the plans or from the Engineer.
5. Select the appropriate column under "Standard Foundations" based on soil type and "N" value. Select the appropriate row based on the pole load case.
6. The foundation depth is the value shown in the "Standard Foundations" category where the column and the row intersect.
7. Use Construction Procedures and Design Methods prescribed by FHWA-NHI-10-016 for Reference Drilled Shafts.

Standard Strain Pole Foundation–All Soil Condition

Prepared in the Offices of:
Transportation Mobility and Safety Division
NORTH CAROLINA DEPARTMENT OF TRANSPORTATION
Signal Design Section
750 N.Greenfield Pkwy.,Garner,NC 27529

Standard Strain Pole Foundation for All Soil Conditions

PLAN DATE:	OCTOBER 2017	DESIGNED BY:	C.B. COGDELL
PREPARED BY:	N. BITTING	REVIEWED BY:	D.C. SARKAR

REVISIONS	INIT.	DATE
Changed "Foundation Depth" to "Drilled Pier Length"in Conc. Eqn.	N.B.	7/12/2015

SCALE: 0 NA NONE

SEAL
NORTH CAROLINA PROFESSIONAL SEAL 028094 ENGINEER DEBESH C. SARKAR

DocuSigned by: Debesh C. Sarkar
SIGNATURE

10/11/2017
DATE

11-OCT-2017 08:40
S:\TS&SU\TS Signals\Signal Design Section\Eastern Region\M Sheets\2016\2014 Sig.M8 Std. Strain Pole Found.-Saturated Soil Condition.dgn
rtaylor

DocuSign Envelope ID: 84970217-ED34-417F-8434-4265F0BBA040

LEGEND

FO — NEW FIBER OPTIC COMMUNICATIONS CABLE	EXISTING METAL POLE
EXI — EXISTING COMMUNICATIONS CABLE	NEW CONTROLLER AND CABINET
REM — EXISTING COMMUNICATIONS CABLE TO BE REMOVED	EXISTING CONTROLLER AND CABINET
NEW AND EXISTING AERIAL GUY ASSEMBLY	NEW AERIAL SPLICE ENCLOSURE
NEW CONDUIT	EXISTING AERIAL SPLICE ENCLOSURE
EXISTING CONDUIT	NEW CABLE STORAGE GUIDES (SNOW–SHOES)
DD — NEW DIRECTIONAL DRILLED CONDUIT	EXISTING CABLE STORAGE GUIDES (SNOW–SHOES)
NEW WOOD POLE	NEW STANDARD GUY ASSEMBLY
EXISTING WOOD POLE	EXISTING STANDARD GUY ASSEMBLY
NEW METAL POLE	NEW SIDEWALK GUY ASSEMBLY
	EXISTING SIDEWALK GUY ASSEMBLY

NEW JUNCTION BOX	
EXISTING JUNCTION BOX	
NEW OVER–SIZED OR SPECIAL–SIZED JUNCTION BOX	
EXISTING OVER–SIZED OR SPECIAL–SIZED JUNCTION BOX	
XX–XXXX SIGNAL INVENTORY NUMBER	
EOP EDGE OF PAVEMENT	
EOL EDGE OF LANE	
BOC BACK OF CURB	
FOC FACE OF CURB	
NEW SYSTEM DETECTOR	
EXISTING SYSTEM DETECTOR	

ABBREVIATIONS

AGUY	Aerial Guy
ARLT	Area Light
BS	Backside Attachment
DL	Drip Loop
DRP	Drop
ELEC	Electric
EXI	Existing Communications Cable
FO	Fiber Optic
FS	Front Side Attachment
IMC	Intermediate Metallic Cable
LIC	Lead–In Cable (Detector)
MSGR	Messenger
NCDOT	North Carolina Department of Transportation
NEUT	Neutral
OH	Overhead
OWS	Open Wire Secondary
PWR	Power
RSR	Riser
SAME	Same Elevation/Attachment Height
SEC	Secondary Power
SGRSR	Signal Riser
SIG	Signal Span
SP	Signal Pole
SO	Standoff
STLT	Streetlight
SVRSR	Service Riser
TEL	Telephone
TFMR	Transformer
TOP	Top of Pole
TRI	Triplex
UG	Underground
UNK	Unknown
X ANY	Crossing Line, where "Any" is the abbreviation for the overhead line that is crossing existing/proposed cable route

NOTES

4 INSTALL SMFO CABLE

47 INSTALL MESSENGER CABLE

48 REMOVE EXISTING COMMUNICATIONS CABLE AND MESSENGER CABLE

51 INSTALL CABLE STORAGE GUIDE(S) (SNOW SHOES) AND STORE 100 FT OF EACH CABLE

56 LASH CABLE(S) TO NEW MESSENGER CABLE

CONSTRUCTION NOTE SYMBOLOGY KEY

XX INDICATES NUMBER OF CABLES, LOOPS, ETC.

XX INDICATES NUMBER OF FIBERS PER CABLE, TWISTED PAIRS PER CABLE, ETC.

XX INDICATES NUMBER OF RISER(S)/CONDUIT(S)

XX INDICATES DIAMETER OF RISER(S)/CONDUIT(S) (INCH)

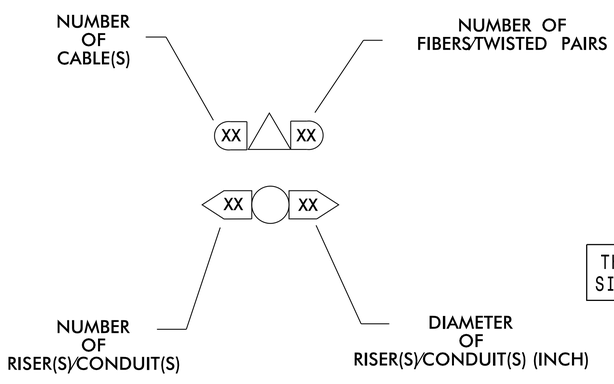

ROADWAY STANDARD DRAWINGS

PROJECT REFERENCE NO.	SHEET NO.
80074	SCP-1

THE FOLLOWING ROADWAY STANDARDS AS APPEAR IN "ROADWAY STANDARD DRAWINGS" PROJECT SERVICES UNIT – N. C. DEPARTMENT OF TRANSPORTATION – RALEIGH, N. C., DATED JANUARY, 2012 ARE APPLICABLE TO THIS PROJECT AND BY REFERENCE ARE HEREBY CONSIDERED A PART OF THESE PLANS:

STD.NO.	TITLE
848.01	CONCRETE SIDEWALK
1101.01	WORK ZONE ADVANCED WARNING SIGNS
1101.02	TEMPORARY LANE CLOSURES
1101.03	TEMPORARY ROAD CLOSURES
1101.04	TEMPORARY SHOULDER CLOSURES
1101.11	TRAFFIC CONTROL DESIGN TABLES
1110.02	PORTABLE WORK ZONE SIGNS
1115.01	FLASHING ARROW BOARDS
1130.01	DRUM
1135.01	CONES
1145.01	BARRICADES
1150.01	FLAGGING DEVICES /FLAGGERS
1165.01	WORK VEHICLE LIGHTING SYSTEMS AND TMA DELINEATION
1180.01	SKINNY–DRUM
1205.01	PAVEMENT MARKINGS – LINE TYPES AND OFFSETS
1205.02	PAVEMENT MARKINGS – TWO– LANE AND MULTI– LANE ROADWAYS
1205.04	PAVEMENT MARKINGS – INTERSECTIONS
1205.05	PAVEMENT MARKINGS – TURN LANES
1205.07	PAVEMENT MARKINGS – PEDESTRIAN CROSSWALKS
1205.08	PAVEMENT MARKINGS – SYMBOLS AND WORD MESSAGES
1700.01	ELECTRICAL SERVICE OPTIONS
1700.02	ELECTRICAL SERVICE GROUNDING
1705.01	SIGNAL HEADS – VEHICULAR SIGNAL HEADS
1705.02	SIGNAL HEADS – MOUNTING
1705.03	SIGNAL HEADS – WIRE COLOR CONVENTIONS
1715.01	UNDERGROUND CONDUIT – TRENCHING
1716.01	JUNCTION BOXES
1720.01	WOOD POLES
1721.01	GUY ASSEMBLIES
1725.01	INDUCTIVE DETECTION LOOPS
1730.01	FIBER– OPTIC CABLE – SPARE CABLE STORAGE
1736.01	SPREAD SPECTRUM RADIO
1743.01	PEDESTALS – PEDESTRIAN PUSHBUTTON (TYPE I)
1743.04	PEDESTALS – FOUNDATIONS
1751.01	CONTROLLERS AND CABINETS – CABINET COMPONENT LAYOUT
1751.02	CONTROLLERS AND CABINETS – POWER, GROUND AND AUXILIARY

GENERAL NOTES

1. ACTUAL CONDITIONS IN THE FIELD AT THE TIME OF CONSTRUCTION MAY BE DIFFERENT FROM THOSE SHOWN IN THE PLANS.
2. THE FIELD LOCATION OF ANY ITEM TO BE INSTALLED AS PART OF THIS PROJECT SHALL BE APPROVED BY THE ENGINEER PRIOR TO INSTALLATION.
3. BURIED UTILITIES AND STRUCTURES: PIPELINES, STORM SEWERS, POWER CABLES, UTILITY CABLES, AND OTHER PUBLICLY AND PRIVATELY OWNED UNDERGROUND OBSTRUCTIONS EXIST ADJACENT TO AND WITHIN THE STREET RIGHT–OF–WAY WITHIN THE CONSTRUCTION LIMITS OF THIS PROJECT. INVESTIGATE THE LOCATION OF SUCH BURIED UTILITIES AND STRUCTURES WITH PUBLIC AND PRIVATE UTILITIES.
4. THE PLAN SHEETS HAVE BEEN DEVELOPED AS CLOSE TO SCALE AS PRACTICAL. HOWEVER, ACTUAL FIELD CONDITIONS SHALL PROVIDE THE BASIS FOR APPLYING THE WORK SHOWN.
5. THE ROADWAY STANDARD DRAWINGS AND THE DETAILS PROVIDED IN THIS PLAN SHEET SHALL ALL APPLY TO ALL WORK REQUIRED IN THIS PROJECT, WHETHER A PARTICULAR DETAIL IS SPECIFICALLY REFERENCED TO A WORK ITEM OR NOT. IN THE EVENT OF A CONFLICT, THE ORDER OF PRECEDENCE SHALL BE: THE PROJECT SPECIAL PROVISIONS, THE PLAN SET – INCLUDING DETAILS – SUPPLEMENTAL SPECIFICATIONS, THE STANDARD SPECIFICATIONS, AND THEN THE ROADWAY STANDARD DRAWINGS. THE CONTRACTOR SHALL BE RESPONSIBLE FOR APPLYING THE PROPER DETAILS.
6. ANY OF THE CONTRACTOR'S WORK ACTIVITIES WHICH IMPACT ANY UTILITY FACILITY SHALL BE COORDINATED WITH THE OWNER OF THE AFFECTED UTILITIES. THE CONTRACTOR SHALL FOLLOW ANY AND ALL WORK PROCEDURES THE UTILITY OWNERS MAY REQUIRE.
7. ALL WORK SHOWN ON THESE PLANS SHALL BE PERFORMED BY THE CONTRACTOR UNLESS SPECIFICALLY NOTED TO BE PERFORMED BY OTHERS.

THIS PLAN SUPERSEDES THE PLAN SIGNED AND SEALED ON 2/22/2019

RS&H
8521 SIX FORKS ROAD, SUITE 400
RALEIGH, NC 27615
(919) 926-4100

DOCUMENT NOT CONSIDERED FINAL UNLESS ALL SIGNATURES COMPLETED

Prepared for the Office of:
Transportation Mobility and Safety Division
STATE OF NORTH CAROLINA • DEPARTMENT OF TRANSPORTATION •
Intelligent Transportation Systems Section
750 N. Greenfield Pkwy., Garner, NC 27529

US 70 Bus./SR 1553 (Shotwell Rd.)
Intersection Modifications
Signal System Legend/ General Notes/Abbreviations/Std. Dwgs.

Division 4 Johnston County Clayton

PLAN DATE:	February 2019	REVIEWED BY:	J. Townsend
PREPARED BY:	S.G. Haynie	REVIEWED BY:	-

REVISIONS	INIT.	DATE

SEAL
NORTH CAROLINA PROFESSIONAL SEAL 029531 ENGINEER STEVEN G. HAYNIE
DocuSigned by: Steve Haynie 10/26/2021
SIGNATURE DATE

Sig. Inventory No. 04-1086

10/26/2021
R:\Projects\Traffic\Signals\Design\System\New Plansheets\W-5704B_sig_psh_scp-01.dgn
10:09:37 PM

DocuSign Envelope ID: 84970217-ED34-417F-8434-4265F0BBA040

PROJECT REFERENCE NO.	SHEET NO.
80074	SCP-2

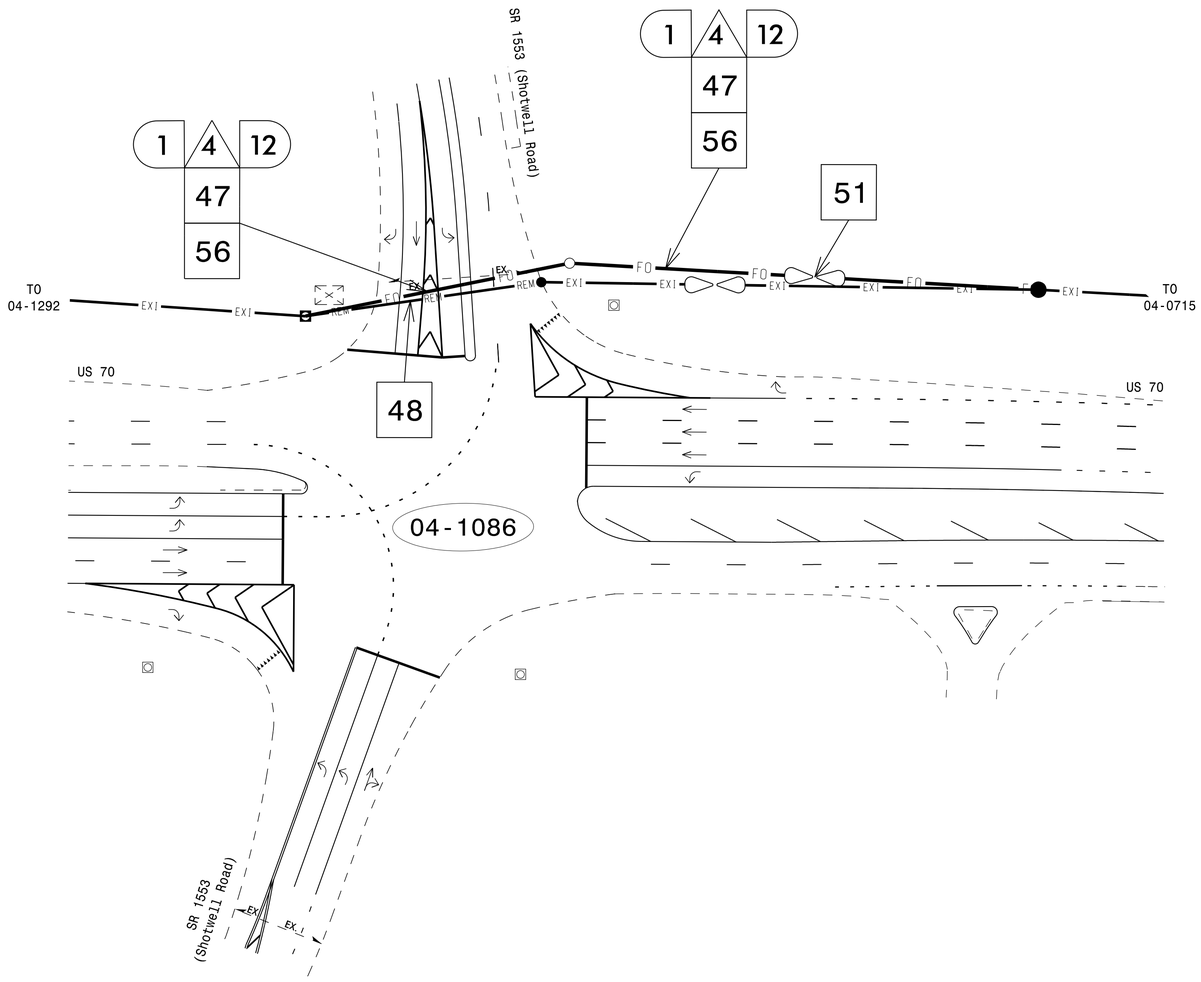

NOTES

These communications routing instructions should be coordinated with the utility plans for the roadway portion of W-5704AB.

The existing condition of the existing 12-SMFO cable from Moore Street to Shotwell Road.

1. Snow shoes and fiber storage are located just east of the existing power pole.
2. The SMFO cable attaches to the existing power pole.
3. From the power pole, the SMFO is attached to a messenger cable to the existing metal traffic signal pole in the northwest corner of the Shotwell Road intersection.
4. The SMFO cable then enters the top of the signal pole, down the inside of the pole and into the signal cabinet.

Cable re-routing instructions

1. After the proposed power pole is set,

a. Install new messenger cable from the existing signal pole to the new power pole and from the new power pole to the nearest power pole to the east.
b. Contractor to record exising splice arrangement for comparison to the supplied splice details. If discrepancies exist, contact the Engineer to determine how to proceed with re-splicing. Provide As-built plans to the Engineer if final spliced arrangement differs from the supplied splice details.
c. Back pull existing fiber and messenger cable to the existing power pole to the east of the new pole.
d. Re-route existing fiber around the existing power pole by lashing to the new messenger cable back to the signal cabinet.
e. Re-terminate fibers on the existing patch panel as recorded to re-establish communications.
f. Re-install the existing snow shoes and store the slack cable on the new messenger just east of the new power pole.
g. Remove and dispose of the abandoned messenger cable.

THIS PLAN SUPERSEDES THE PLAN SIGNED AND SEALED ON 2/22/2019

RS&H

8521 SIX FORKS ROAD, SUITE 400
RALEIGH, NC 27615
(919) 926-4100

DOCUMENT NOT CONSIDERED FINAL UNLESS ALL SIGNATURES COMPLETED

Prepared for the Office of:

750 N. Greenfield Pkwy., Garner, NC 27529

SCALE 0 40 1"=40'

Communications Cable and Conduit Routing Plan

Division 4 Johnston County Clayton

PLAN DATE:	February 2019	REVIEWED BY:	J. Townsend
PREPARED BY:	S.G. Haynie	REVIEWED BY:	-

REVISIONS	INIT.	DATE

SEAL

NORTH CAROLINA PROFESSIONAL SEAL 029531 ENGINEER STEVEN G. HAYNIE

DocuSigned by: Steve Haynie 10/26/2021

SIGNATURE DATE

Sig. Inventory No. 04-1086

10/26/2021
R:\Design\Traffic\Signals\Design\System\New Plansheets\W-5704B_sig_psh_scp-02.dgn
3:20:09 PM

DocuSign Envelope ID: 84970217-ED34-417F-8434-4265F0BBA040

PROJECT REFERENCE NO.	SHEET NO.
80074	SCP-3

US 70 BUSINESS AT SR 1553 (SHOTWELL ROAD)

SIG. INV. # 04-1086

NOTE:
CONTRACTOR TO RECORD EXISTING SPLICE ARRANGEMENT FOR COMPARISON TO THE SUPPLIED SPLICE DETAILS. IF DISCREPANCIES EXIST, CONTACT THE ENGINEER TO DETERMINE HOW TO PROCEED WITH THE RE-SPLICING. PROVIDE AS-BUILT PLANS TO THE ENGINEER IF FINAL SPLICE ARRANGEMENT DIFFERS FROM THE SUPPLIED SPLICE DETAILS.

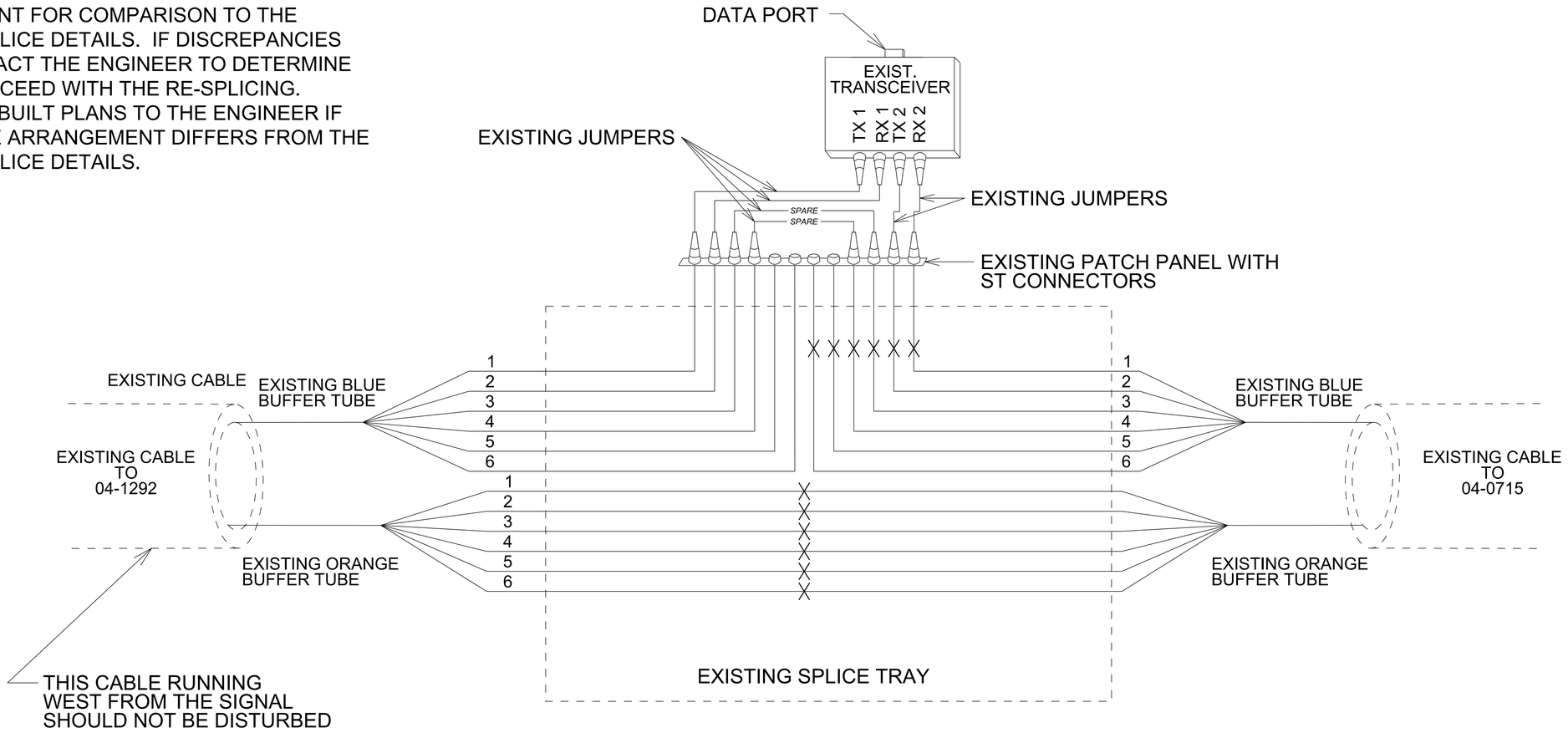

LEGEND

COLOR CODE TIA/EIA 598-A

(1) BLUE
(2) ORANGE
(3) GREEN
(4) BROWN
(5) SLATE
(6) WHITE

- - - - - - - - - = EXISTING CABLE

——————— = NEW CABLE

╳ = FUSION SPLICE INDIVIDUAL FIBER

THIS PLAN SUPERSEDES THE PLAN SIGNED AND SEALED ON 2/22/2019

RS&H
8521 SIX FORKS ROAD, SUITE 400
RALEIGH, NC 27615
(919) 926-4100

Prepared for the Office of:
Transportation Mobility and Safety Division
STATE OF NORTH CAROLINA
DEPARTMENT OF TRANSPORTATION
Intelligent Transportation Systems Section
750 N. Greenfield Pkwy., Garner, NC 27529

DOCUMENT NOT CONSIDERED FINAL UNLESS ALL SIGNATURES COMPLETED

Splice Detail

Division 4 Johnston County Clayton

PLAN DATE:	February 2019	REVIEWED BY:	J. Townsend
PREPARED BY:	S.G. Haynie	REVIEWED BY:	-

REVISIONS	INIT.	DATE

SEAL
NORTH CAROLINA PROFESSIONAL SEAL 029531 ENGINEER STEVEN G. HAYNIE

DocuSigned by: Steve Haynie 10/26/2021
DESIGNER'S SIGNATURE DATE

Sig. Inventory No. 04-1086

10/26/2021
S:\Traffic\Signals\Design\System\New Plansheets\W-5704B_sig_psh_scp-03.dgn
S. Haynie, PM

DocuSign Envelope ID: FBCD8768-5D23-458C-88AF-08FB90DD1465

TIP PROJECT: 80074

See Sheet 1A For Index of Sheets
See Sheet 1B For Conventional Symbols
See Sheet 1C-1 Thru 1C-6 For Survey Control Sheets

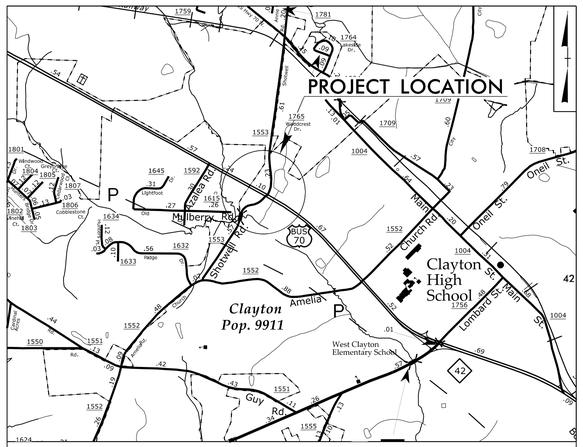

VICINITY MAP

STATE OF NORTH CAROLINA
DIVISION OF HIGHWAYS

T.I.P. NO.	SHEET NO.
80074	UC–1

DOCUMENT NOT CONSIDERED FINAL UNLESS ALL SIGNATURES COMPLETED

UTILITY CONSTRUCTION PLANS
JOHNSTON COUNTY

UPDATED SIGNAL

PROPOSED SIGNAL

LOCATION: US–70 BUSINESS FROM SR 1553 (SHOTWELL ROAD) TO WILDWOOD DRIVE

TYPE OF WORK: WATER AND SANITARY SEWER RELOCATIONS

NAD 83/2011

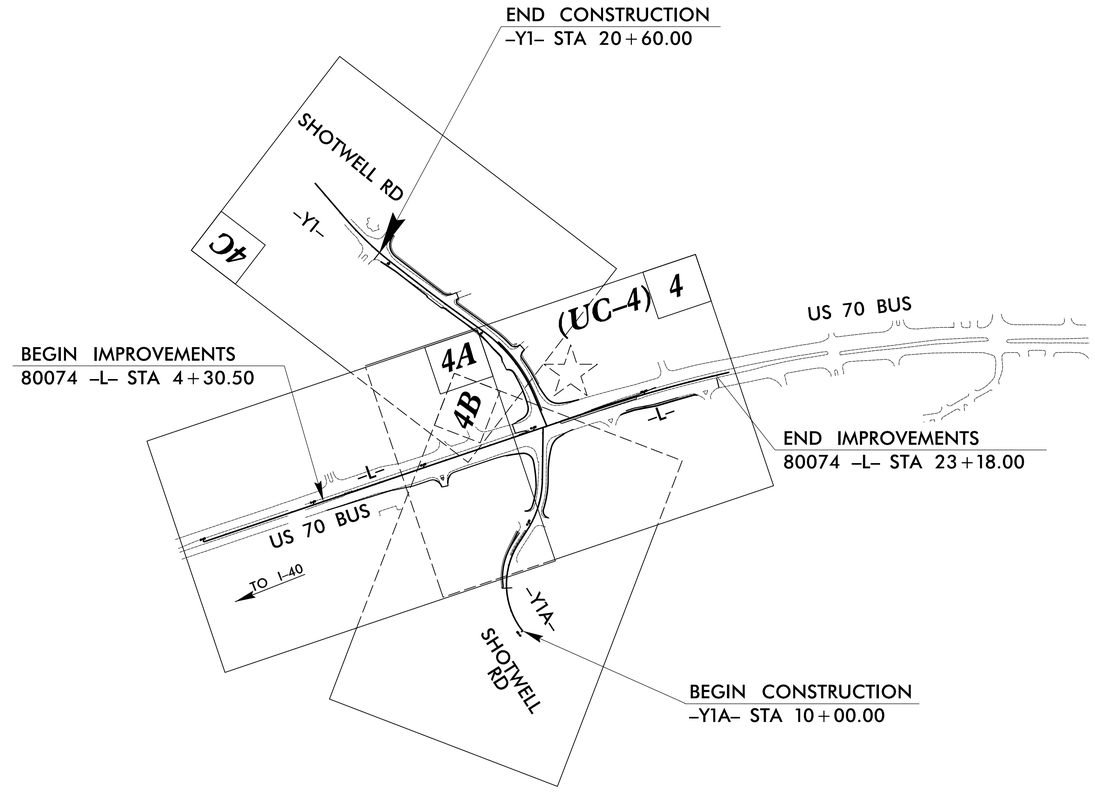

GRAPHIC SCALES

50 25 0 50 100
PLANS

50 25 0 50 100
PROFILE (HORIZONTAL)

10 5 0 10 20
PROFILE (VERTICAL)

INDEX OF SHEETS

SHEET NO.	*DESCRIPTION*
UC–1	*TITLE SHEET*
UC–2	*UTILITY SYMBOLOGY*
UC–3	*NOTES*
UC–3A TO UC–3D	*DETAILS*
UC–4	*UTILITY CONSTRUCTION SHEET*
UC–5 TO UC–6	*PROFILE SHEETS*

WATER AND SEWER OWNERS ON PROJECT

(A) TOWN OF CLAYTON

PREPARED IN THE OFFICE OF:

HINDE ENGINEERING
License No. C-2639
401 Harrison Oaks Blvd., Suite 220 Cary, NC 27513
Ph. (919) 653-0001

Clint L. Stevens, P.E. — *UTILITIES PROJECT MANAGER*
Corey D. Bousquet, P.E. — *UTILITIES PROJECT ENGINEER*
Jordan Chapman — *UTILITIES PROJECT DESIGNER*

SEAL

NORTH CAROLINA PROFESSIONAL SEAL 023047 ENGINEER COREY D BOUSQUET
Docusigned by: Corey D. Bousquet, P.E.
8/4/2021

DIVISION OF HIGHWAYS
DIVISION 4
509 WARD BLVD.
WILSON NC 27895
PHONE (252) 640-6400
FAX (252) 234-6174

Kyle Pleasant — *DIVISION UTILITIES ENGINEER*
Frank Zdelar — *DIVISION UTILITY COORDINATOR*

04-AUG-2021 10:20
S:\Server Files\PROJECTS\2021\A2021302.00_SEPI_ShotwellRoad\Design\Utilities\Engineering\UC\Proj\80074_Ut_tsh_UCl_psh.dgn
$$$$USERNAME$$$$

DocuSign Envelope ID: FBCD8768-5D23-458C-88AF-08FB90DD1465

PROJECT REFERENCE NO.	SHEET NO.
80074	UC-2

HINDE ENGINEERING
License No. C-2639
401 Harrison Oaks Blvd., Suite 220 Cary, NC 27513

STATE OF NORTH CAROLINA
DIVISION OF HIGHWAYS

UTILITIES PLAN SHEET SYMBOLS

PROPOSED WATER SYMBOLS

- Water Line (Sized as Shown) — 12" WL
- 11¼ Degree Bend
- 22½ Degree Bend
- 45 Degree Bend
- 90 Degree Bend
- Plug
- Tee
- Cross
- Reducer
- Gate Valve — GV
- Butterfly Valve — BV
- Tapping Valve — TGV
- Line Stop — LS
- Line Stop with Bypass — LS/BP
- Blow Off — BO
- Fire Hydrant — PFH
- Relocate Fire Hydrant — RFH
- Remove Fire Hydrant — REM FH
- Water Meter — PWM
- Relocate Water Meter — RWM
- Remove Water Meter — REM WM
- Water Pump Station — PS(W)
- RPZ Backflow Preventer — PRPZ
- DCV Backflow Preventer — PBFP
- Relocate RPZ Backflow Preventer — RRPZ
- Relocate DCV Backflow Preventer — RBFP

PROPOSED SEWER SYMBOLS

- Gravity Sewer Line (Sized as Shown) — 12" SS
- Force Main Sewer Line (Sized as Shown) — 12" FSS
- Manhole (Sized per Note)
- Sewer Pump Station — PS(SS)

PROPOSED MISCELLANOUS UTILITIES SYMBOLS

- Power Pole
- Telephone Pole
- Joint Use Pole
- Telephone Pedestal — TEL PED
- Utility Line by Others (Type as Shown) — PROP O/H POW LINES
- Trenchless Installation — 12" TL INSTALL
- Encasement by Open Cut — 24" ENCAS BY OC
- Encasement — 24" ENCASEMENT
- Thrust Block
- Air Release Valve — AR
- Utility Vault — UV
- Concrete Pier — CP
- Steel Pier — SP
- Plan Note — NOTE
- Pay Item Note — PAY ITEM

EXISTING UTILITIES SYMBOLS

- Power Pole
- Telephone Pole
- Joint Use Pole
- Utility Pole
- Utility Pole with Base
- H-Frame Pole
- Power Transmission Line Tower
- Water Manhole
- Power Manhole
- Telephone Manhole
- Sanitary Sewer Manhole
- Hand Hole for Cable
- Power Transformer
- Telephone Pedestal
- CATV Pedestal
- Gas Valve
- Gas Meter
- Located Miscellaneous Utility Object
- Abandoned According to Utility Records — AATUR
- End of Information — E.O.I.
- *Underground Power Line — P
- *Underground Telephone Cable — T
- *Underground Telephone Conduit — TC
- *Underground Fiber Optics Telephone Cable — T FO
- *Underground TV Cable — TV
- *Underground Fiber Optics TV Cable — TV FO
- *Underground Gas Pipeline — G
- Aboveground Gas Pipeline — A/G Gas
- *Underground Water Line — W
- Aboveground Water Line — A/G Water
- *Underground Gravity Sanitary Sewer Line — SS
- Aboveground Gravity Sanitary Sewer Line — A/G Sanitary Sewer
- *Underground SS Forced Main Line — FSS
- Underground Unknown Utility Line — ?UTL
- SUE Test Hole
- Water Meter
- Water Valve
- Fire Hydrant
- Sanitary Sewer Cleanout

*For Existing Utilities

- Utility Line Drawn from Record (Type as Shown) — W
- Designated Utility Line (Type as Shown) — W

REV: 2/1/2012

04-AUG-2021 10:20
02.00 SEPI Shotwell Road\Design\Utilities\Engineering\UC\Proj\80074_Ut_sym_UC2_psh.dgn
$$$$USERNAME$$$$

DocuSign Envelope ID: 976BB692-A4F4-46BE-A13A-9BC7692510ED

HINDE ENGINEERING
License No. C-2639
401 Harrison Oaks Blvd., Suite 220 Cary, NC 27513

DOCUMENT NOT CONSIDERED FINAL UNLESS ALL SIGNATURES COMPLETED

PROJECT REFERENCE NO.	SHEET NO.
80074	UC-3
DESIGNED BY: JKC	
DRAWN BY: JKC	
CHECKED BY: CLS	
APPROVED BY: CDB	
REVISED:	

NORTH CAROLINA DEPARTMENT OF TRANSPORTATION
UTILITIES ENGINEERING SEC.
PHONE:(919)707-6690
FAX:(919)250-4151

NORTH CAROLINA PROFESSIONAL SEAL 042071 ENGINEER CASEY D BOUSQUET
DocuSigned by: Casey D. Bousquet, PE
B4C9F928878C49A...

11/11/2021
UTILITY CONSTRUCTION PLANS ONLY

UTILITY CONSTRUCTION

UTILITY CONSTRUCTION

GENERAL NOTES:

1. THE PROPOSED UTILITY CONSTRUCTION SHALL MEET THE APPLICABLE REQUIREMENTS OF THE NC DEPARTMENT OF TRANSPORTATION'S "STANDARD SPECIFICATIONS FOR ROADS AND STRUCTURES" DATED JANUARY 2012.

2. THE EXISTING UTILITIES BELONG TO TOWN OF CLAYTON. THE CONTACT PERSON FOR THE TOWN OF CLAYTON IS MR. JOSHUA BAIRD, MR. BAIRD CAN BE REACHED BY PHONE AT (919) 359-9379.

3. ALL WATER LINES TO BE INSTALLED WITHIN COMPLIANCE OF THE RULES AND REGULATIONS OF THE NORTH CAROLINA DEPARTMENT OF ENVIRONMENTAL QUALITY, DIVISION OF WATER RESOURCES, PUBLIC WATER SUPPLY SECTION. ALL SEWER LINES TO BE INSTALLED WITHIN COMPLIANCE OF THE RULES AND REGULATIONS OF THE NORTH CAROLINA DEPARTMENT OF ENVIRONMENT QUALITY, DIVISION OF WATER RESOURCES, WATER QUALITY SECTION. PERFORM ALL WORK IN ACCORDANCE WITH THE APPLICABLE PLUMBING CODES.

4. THE UTILITY OWNER OWNS THE EXISTING UTILITY FACILITIES AND WILL OWN THE NEW UTILITY FACILITIES AFTER ACCEPTANCE BY THE DEPARTMENT. THE DEPARTMENT OWNS THE CONSTRUCTION CONTRACT AND HAS ADMINISTRATIVE AUTHORITY. COMMUNICATIONS AND DECISIONS BETWEEN THE CONTRACTOR AND UTILITY OWNER ARE NOT BINDING UPON THE DEPARTMENT OR THIS CONTRACT UNLESS AUTHORIZED BY THE ENGINEER. AGREEMENTS BETWEEN THE UTILITY OWNER AND CONTRACTOR FOR THE WORK THAT IS NOT PART OF THIS CONTRACT OR IS SECONDARY TO THIS CONTRACT ARE ALLOWED, BUT ARE NOT BINDING UPON THE DEPARTMENT.

5. PROVIDE ACCESS FOR THE DEPARTMENT PERSONNEL AND THE OWNER'S REPRESENTATIVES TO ALL PHASES OF CONSTRUCTION. NOTIFY DEPARTMENT PERSONNEL AND THE UTILITY OWNER TWO WEEKS PRIOR TO COMMENCEMENT OF ANY WORK AND ONE WEEK PRIOR TO SERVICE INTERRUPTION. KEEP UTILITY OWNERS' REPRESENTATIVES INFORMED OF WORK PROGRESS AND PROVIDE OPPORTUNITY FOR INSPECTION OF CONSTRUCTION AND TESTING.

6. THE PLANS DEPICT THE BEST AVAILABLE INFORMATION FOR THE LOCATION, SIZE, AND TYPE OF MATERIAL FOR ALL EXISTING UTILITIES. MAKE INVESTIGATIONS FOR DETERMINING THE EXACT LOCATION, SIZE, AND TYPE MATERIAL OF THE EXISTING FACILITIES AS NECESSARY FOR THE CONSTRUCTION OF THE PROPOSED UTILITIES AND FOR AVOIDING DAMAGE TO EXISTING FACILITIES. REPAIR ANY DAMAGE INCURRED TO EXISTING FACILITIES TO THE ORIGINAL OR BETTER CONDITION AT NO ADDITIONAL COST TO THE DEPARTMENT.

7. MAKE FINAL CONNECTIONS OF THE NEW WORK TO THE EXISTING SYSTEM WHERE INDICATED ON THE PLANS, AS REQUIRED TO FIT THE ACTUAL CONDITIONS, OR AS DIRECTED.

8. MAKE CONNECTIONS BETWEEN EXISTING AND PROPOSED UTILITIES AT TIMES MOST CONVENIENT TO THE PUBLIC, WITHOUT ENDANGERING THE UTILITY SERVICE, AND IN ACCORDANCE WITH THE UTILITY OWNER'S REQUIREMENTS. MAKE CONNECTIONS ON WEEKENDS, AT NIGHT, AND ON HOLIDAYS IF NECESSARY.

9. ALL UTILITY MATERIALS SHALL BE APPROVED PRIOR TO DELIVERY TO THE PROJECT. SEE 1500-7, " SUBMITTALS AND RECORDS" IN SECTION 1500 OF THE STANDARD SPECIFICATIONS.

10. CONTRACTOR SHALL FIELD VERIFY THE VERTICAL AND HORIZONTAL ALIGNMENTS OF THE PROPOSED UTILITY TIE-IN POINTS SHOWN ON THE PLANS. ONCE THE TIE-IN POINTS AND GRADE OF PROPOSED UTILITY LINES ARE VERIFIED AS CORRECT, THE CONTRACTOR CAN BEGIN CONSTRUCTION ON THE PROPOSED UTILITY LINES.

PROJECT SPECIFIC NOTES:

1. PROPOSED 12" WATER LINE FROM STATION 10+70.76 TO STATION 14+86.37 LINE -Y1- SHALL BE D.I.R.J. (DUCTILE IRON RESTRAINED JOINT) PIPE.

2. PROPOSED 16" WATER LINE FROM STATION 14+77.84 TO STATION 15+09.77 LINE -L- SHALL BE D.I.R.J. (DUCTILE IRON RESTRAINED JOINT) PIPE.

3. PROPOSED 16" WATER LINE FROM STATION 16+59.44 TO STATION 16+84.44 LINE -L- SHALL BE D.I.R.J. (DUCTILE IRON RESTRAINED JOINT) PIPE.

4. PROPOSED 8" RECLAIMED WATER DISTRIBUTION LINE FROM STATION 16+40.68 TO STATION 18+17.40 LINE -Y1A- SHALL BE D.I.R.J. (DUCTILE IRON RESTRAINED JOINT) PIPE.

5.INDENIFICATION TAPE SHALL BE INSTALLED ALONG THE PROPOSED RECLAIMED WATER DISTRIBUTION LINE AND SHALL BE AT LEAST THREE INCHES WIDE AND HAVE WHITE OR BLACK LETTERS ON PURPLE (PANTONE 522 OR EQUIVALENT) INSCRIBED WITH "CAUTION: RECLAIMED WATER - DO NOT DRINK". THE INDENIFICATION TAPE SHALL BE INSTALLED ON TOP OF RECLAIMED WATER LINE, FASTEN AT LEAST EVERY 10 FEET AND RUN CONTINUOSLY THE ENTIRE LENGTH OF THE PIPE.

L:\NW-2021\2\3
C:\Users\jkc\AppData\Local\Temp\$$$$INFRNAME$$$$
L:\PROJECTS\2021\A2021302.00_SEPI_Shotwell Road\Design\Utilities\Engineering\UCVP-o_\80074_Ut_notes_UC3_psh.dgn

DocuSign Envelope ID: FDCBA0F7-B5D6-48E2-A6FC-F33134170E85

PROJECT TYPICAL DETAILS

NOT TO SCALE

HINDE ENGINEERING
License No. C-2639
401 Harrison Oaks Blvd., Suite 220 Cary, NC 27513

DOCUMENT NOT CONSIDERED FINAL UNLESS ALL SIGNATURES COMPLETED

PROJECT REFERENCE NO.	SHEET NO.
80074	UC-3A

DESIGNED BY: JKC
DRAWN BY: JKC
CHECKED BY: CLS
APPROVED BY: CDB
REVISED:

NORTH CAROLINA DEPARTMENT OF TRANSPORTATION
UTILITIES ENGINEERING SEC.
PHONE:(919)707-6690
FAX:(919)250-4151

NORTH CAROLINA PROFESSIONAL SEAL 023041 ENGINEER CUREY D. BOUSQUET
Docusigned by: Carey D. Bousquet, P.E.
8/4/2021
UTILITY CONSTRUCTION PLANS ONLY

UTILITY CONSTRUCTION

RELOCATION OF WATER METERS AND BACKFLOW PREVENTERS SHALL BE COORDINATED WITH THE PROPERTY OWNER AND TOWN OF CLAYTON

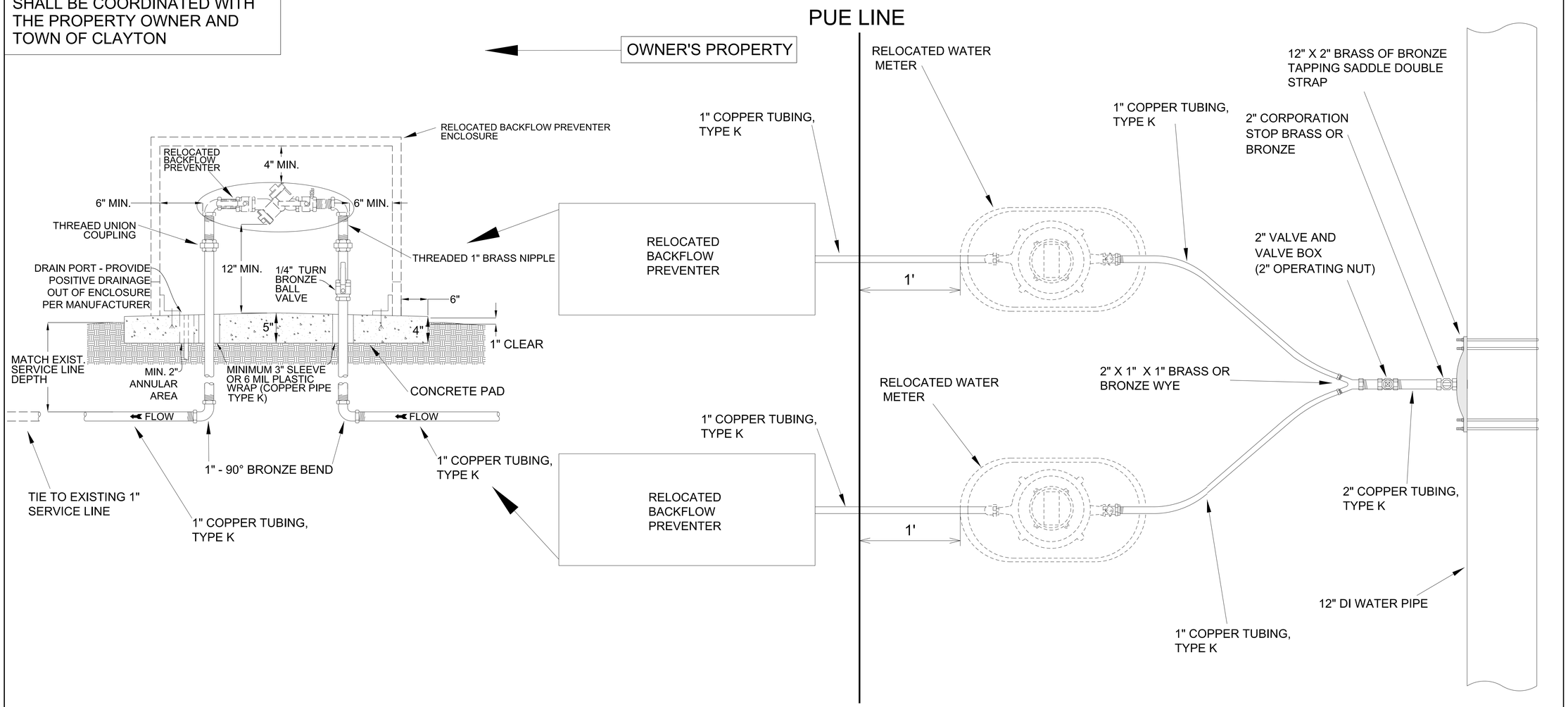

ALL FITTINGS, TAPPING SADDLES, CORPORATION STOPS AND BALL VALVES ARE INCIDENTAL TO RELOCATE WATER METER, RELOCATE RPZ BACKFLOW PREVENTION ASSEMBLY AND WATER SERVICE LINE PAY ITEMS

WATER METER AND BACKFLOW PREVENTER RELOCATION

PLACE 3" OF #57 OR #78 WASHED STONE BENEATH RELOCATED WATER METERS

04-AUG-2021 13:44
S:\Server Files\PROJECTS\2021\A2021302.00_SEPI_Shotwell Road\Design\Utilities\Engineering\UC\Proj\80074_Ut_dtl_UC3A_psh.dgn
$$$$USERNAME$$$$

DocuSign Envelope ID: 976BB692-A4F4-46BE-A13A-9BC7692510ED

NOT TO SCALE

HINDE ENGINEERING
License No. C-2639
401 Harrison Oaks Blvd., Suite 145 Cary, NC 27513

DOCUMENT NOT CONSIDERED FINAL UNLESS ALL SIGNATURES COMPLETED

PROJECT REFERENCE NO.	SHEET NO.
80074	UC-3B

DESIGNED BY:	JKC
DRAWN BY:	JKC
CHECKED BY:	CLS
APPROVED BY:	CDB
REVISED:	

NORTH CAROLINA DEPARTMENT OF TRANSPORTATION
UTILITIES ENGINEERING SEC.
PHONE:(919)707-6690
FAX:(919)250-4151

NORTH CAROLINA PROFESSIONAL ENGINEER SEAL DocuSigned by: Corey D Bousquet, PE 12.3107777 BC9F92887BC49A... COREY D BOUSQUET

11/11/2021
UTILITY CONSTRUCTION PLANS ONLY

UTILITY CONSTRUCTION

PROJECT TYPICAL DETAILS

Details Provided by APPIAN Consulting Engineers – www.appianengineers.com 08/06/2010 – 10:40:22 AM

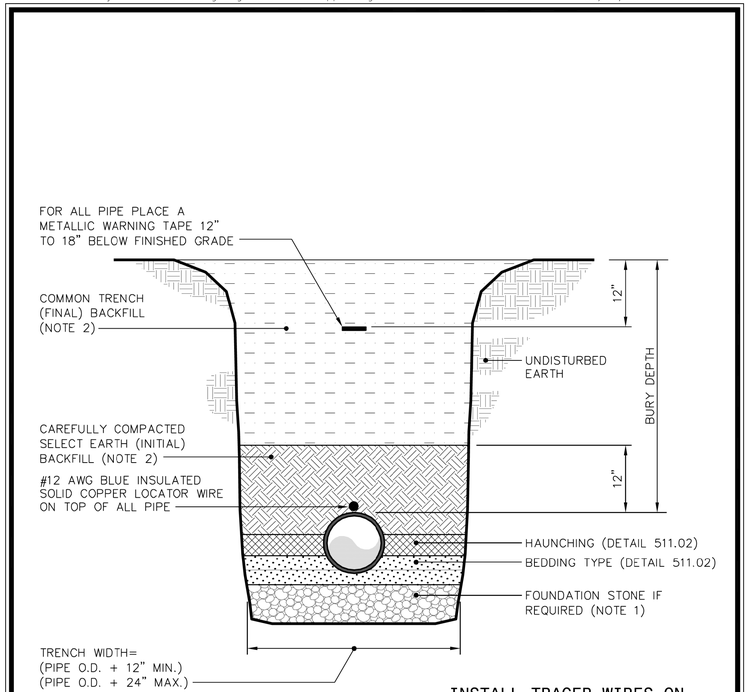

INSTALL TRACER WIRES ON WATER AND FORCE MAINS AS DIRECTED BY THE TOWN OF CLAYTON

NOTES:

1. 8" deep No. 57 stone or equal wrapped in non-woven geotextile filter fabric lightly compacted. Overlap fabric by minimum one pipe O.D.
2. See specifications Section 02275, Part 2 – PRODUCTS for composition of Select Earth Backfill and Common Trench Backfill.

TOWN of CLAYTON
USE WITH THE TOWN of CLAYTON STANDARD SPECIFICATIONS ONLY

SEWER & WATER MAIN PIPE LAYING CONDITIONS

SCALE:	DETAIL #
Not To Scale	2 511.01
REVISION DATE: July, 2010	SHEET #: 1 of 1

MAXIMUM TRENCH WIDTH AT TOP OF PIPE

NOMINAL PIPE SIZE (INCHES)	TRENCH WIDTH (INCHES)	NOMINAL PIPE SIZE (INCHES)	TRENCH WIDTH (INCHES)
4	28	20	44
6	30	24	48
8	32	30	54
10	34	36	60
12	36	42	66
14	38	48	72
16	40	54	78
18	42		

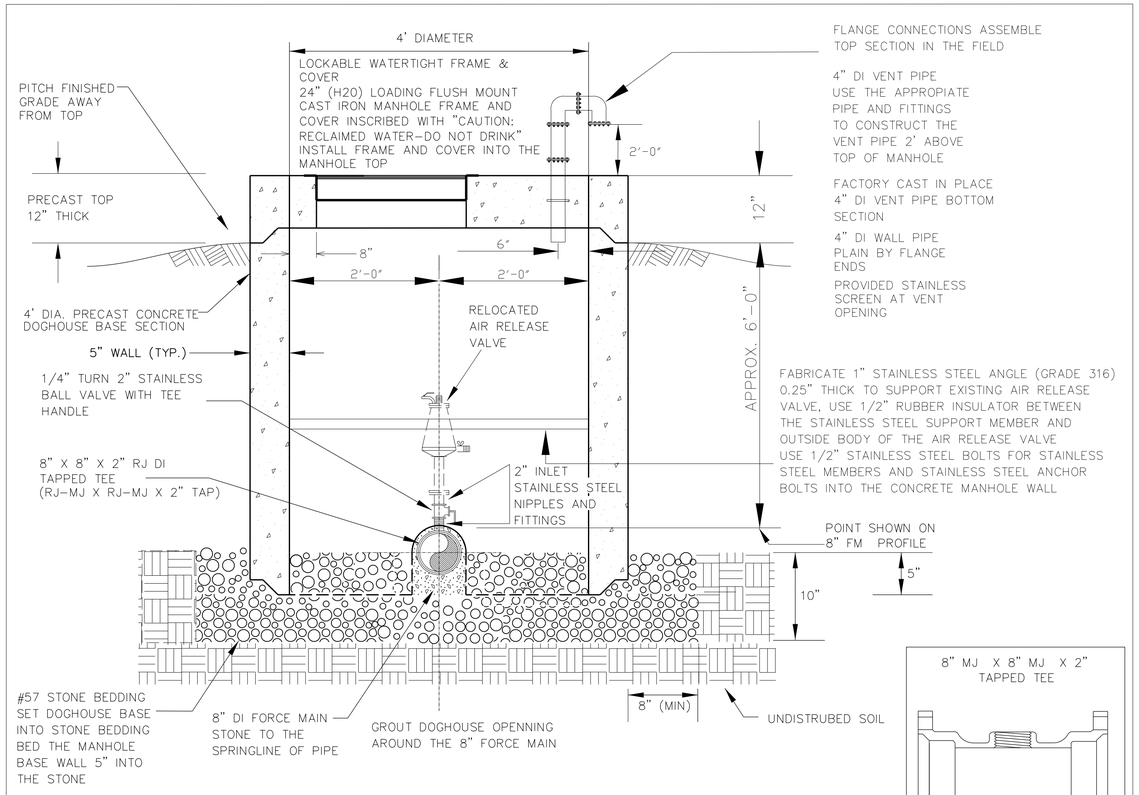

NOTES:

1. USE NECESSARY FITTINGS SPECIFIED BY THE TOWN OF CLAYTON TO CONNECT THE EXISTING AIR RELEASE VALVE TO THE PROP. 8" FORCE MAIN.
2. MANHOLE STRUCTURE/ FRAME AND COVER TO BE RATED FOR AASHTO H20 LOADING.
3. CONNECT RELOCATED AIR RELEASE VALVE USING NECESSARY FITTINGS
4. ALL MANHOLE JOINTS TO BE T & G W/ PREFORMED BUTYL RUBBER (MASTIC) OR O-RING GASKET.

USE REINFORCEMENT STEEL FOR PRECAST MANHOLE AS SHOWN IN NCDOT ROADWAY STANDARD DRAWING 2018 "STANDARD DETAIL 840.52"

RELOCATE AIR RELEASE VALVE
(8" FORCE MAIN)
NTS

PLOTTED: 11-NOV-2021 10:37
C:\Users\...\PROJECTS\2021\A2021302.00_SEPI_Shotwell Road\Design\Utilities\Engineering\UCVP-0J\80074_Ut_dtl_UC3B_psh.dgn
$$$$USERNAME$$$$

DocuSign Envelope ID: 976BB692-A4F4-46BE-A13A-9BC7692510ED

NOT TO SCALE

HINDE ENGINEERING
License No. C-2639
401 Harrison Oaks Blvd., Suite 145 Cary, NC 27513

DOCUMENT NOT CONSIDERED FINAL UNLESS ALL SIGNATURES COMPLETED

PROJECT REFERENCE NO.	SHEET NO.
80074	UC-3C
DESIGNED BY: JKC	
DRAWN BY: JKC	
CHECKED BY: CLS	
APPROVED BY: CDB	
REVISED:	

NORTH CAROLINA DEPARTMENT OF TRANSPORTATION
UTILITIES ENGINEERING SEC.
PHONE:(919)707-6690
FAX:(919)250-4151

NORTH CAROLINA PROFESSIONAL ENGINEER SEAL — DocuSigned by: Corey D Bousquet, PE — 11/12/2021 — B4C9F928878C49A... — COREY D BOUSQUET

11/11/2021
UTILITY CONSTRUCTION PLANS ONLY

PROJECT TYPICAL DETAILS

UTILITY CONSTRUCTION

Details Provided by APPIAN Consulting Engineers — www.appianengineers.com 08/06/2010 — 10:39:16 AM

ONLY USE PROPOSED BLOCKING AT:
1. TIE-IN POINTS ON THE 12" WATER AND 8" FORCE MAIN.
2. 16" X 16" X 12" TEE AND 16" X 16" X 6" TEE AFTER THE WATER LINE IS PUT IN SERVICE.

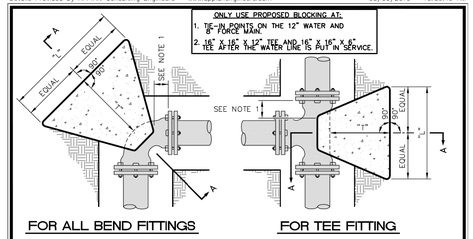

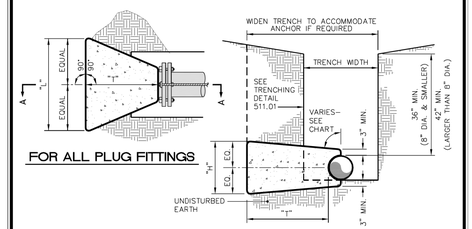

NOTES:
1. Concrete blocking is to be formed to ensure accessibility to fittings and poured against undisturbed earth.
2. Fittings are to be completely wrapped with plastic, prior to pouring concrete.
3. Concrete to be minimum 3,000 psi. @ 28 days.

TOWN of CLAYTON
USE WITH THE TOWN of CLAYTON STANDARD SPECIFICATIONS ONLY

HORIZONTAL BLOCKING DETAIL for BENDS, TEE, & PLUG

SCALE: Not To Scale	DETAIL # 512-01
REVISION DATE: July, 2010	SHEET # 1 of 2

Details Provided by APPIAN Consulting Engineers — www.appianengineers.com 08/06/2010 — 10:39:02 AM

TEST PRESSURE = 150 P.S.I.

PIPE SIZE	TYPE FITTING	DIMENSIONS (Ft.) "L"	"H"	"T"	VOLUME CONCRETE CU. YD.
4" INCHES	11 1/4°	---	---	---	---
	22 1/2°	1.00	1.00	1.50	0.06
	45°	1.00	1.00	1.50	0.06
	90°	1.00	1.00	2.50	0.09
	TEE / PLUG	1.00	1.00	2.00	0.07
4" INCHES	11 1/4°	1.00	1.00	2.50	0.09
	22 1/2°	1.00	1.00	2.50	0.09
	45°	1.00	1.00	2.50	0.09
	90°	1.50	1.50	2.50	0.15
	TEE / PLUG	1.50	1.50	2.00	0.12
6" INCHES	11 1/4°	1.50	1.50	2.50	0.15
	22 1/2°	1.50	1.50	2.50	0.15
	45°	1.50	1.50	2.50	0.15
	90°	2.00	2.00	3.00	0.28
	TEE / PLUG	2.00	2.00	2.50	0.23
8" INCHES	11 1/4°	2.00	2.00	2.50	0.23
	22 1/2°	2.00	2.00	2.50	0.23
	45°	2.00	2.00	2.75	0.25
	90°	3.00	3.00	3.00	0.39
	TEE / PLUG	3.00	2.00	2.50	0.32
12" INCHES	11 1/4°	2.00	2.00	3.00	0.28
	22 1/2°	2.00	2.00	3.00	0.28
	45°	3.00	2.50	3.00	0.47
	90°	4.50	3.00	3.50	0.94
	TEE / PLUG	4.50	3.00	3.00	0.81
16" INCHES	11 1/4°	2.00	2.00	3.00	0.28
	22 1/2°	3.00	2.00	3.00	0.39
	45°	4.00	3.00	3.50	0.84
	90°	6.50	3.50	3.50	1.54
	TEE / PLUG	6.50	3.50	3.00	1.32

TEST PRESSURE = 200 P.S.I.

PIPE SIZE	TYPE FITTING	DIMENSIONS (Ft.) "L"	"H"	"T"	VOLUME CONCRETE CU. YD.
4" INCHES	11 1/4°	1.00	1.00	1.00	0.04
	22 1/2°	1.00	1.00	1.50	0.06
	45°	1.00	1.00	1.50	0.06
	90°	1.50	1.50	2.50	0.15
	TEE	1.50	1.50	2.00	0.12
6" INCHES	11 1/4°	1.00	1.00	2.50	0.09
	22 1/2°	1.00	1.00	2.50	0.09
	45°	1.50	1.50	2.50	0.15
	90°	1.50	1.50	2.50	0.15
	TEE	1.50	1.50	2.00	0.12
8" INCHES	11 1/4°	1.50	1.50	2.50	0.15
	22 1/2°	1.50	1.50	2.50	0.15
	45°	1.50	1.50	2.50	0.15
	90°	2.50	2.00	3.00	0.33
	TEE	2.50	2.00	2.50	0.28
12" INCHES	11 1/4°	2.00	2.00	2.50	0.23
	22 1/2°	2.00	2.00	2.50	0.23
	45°	2.00	2.00	2.50	0.23
	90°	4.00	2.00	3.00	0.50
	TEE	4.00	2.00	2.50	0.42
16" INCHES	11 1/4°	2.00	2.00	3.00	0.28
	22 1/2°	3.00	2.00	3.00	0.39
	45°	4.00	2.50	3.00	0.61
	90°	5.50	3.00	3.50	1.13
	TEE	5.50	3.00	3.00	0.97
20" INCHES	11 1/4°	2.00	2.00	3.00	0.28
	22 1/2°	4.00	2.00	3.00	0.50
	45°	5.50	3.00	3.50	1.13
	90°	7.50	4.00	3.50	2.01
	TEE	7.50	4.00	3.00	1.72

CHART NOTES:
1. If blocking excavation is in lightly compacted fill areas, or in areas where boulders or stumps have been removed, blocking size must be re-sized for the specific location/circumstance by a NC licensed Professional Engineer.
2. Blocking sizes shown in these tables assume the following:
   A. Blocking is constructed in residual soils as shown in detail.
   B. Soil bearing pressure = 2000 psf
   C. Velocity of flow = 15 fps.
3. This detail not applicable to reducing bends.
4. Neither the weight of the concrete blocking nor friction between concrete blocking and soil was added into blocking sizes computation. Therefore, blocking size is conservative.

TOWN of CLAYTON
USE WITH THE TOWN of CLAYTON STANDARD SPECIFICATIONS ONLY

HORIZONTAL BLOCKING DETAIL for BENDS, TEE, & PLUG

SCALE: Not To Scale	DETAIL # 512-01
REVISION DATE: July, 2010	SHEET # 2 of 2

Details Provided by APPIAN Consulting Engineers — www.appianengineers.com 08/06/2010 — 10:40:57 AM

PART	MANUFACTURER MODEL / Cat. No.
SADDLE (BRASS OR BRONZE FOR "CC" THREADS)	FORD / 202B MUELLER / BR2B SMITH BLAIR / 325-000 SERIES (OR APPROVED EQUAL)
CORP. STOP (BRASS OR BRONZE FOR "CC" THREADS)	MUELLER / H-15008 SERIES FORD / F-1000G A.Y. McDONALD / 4701T (OR APPROVED EQUAL)

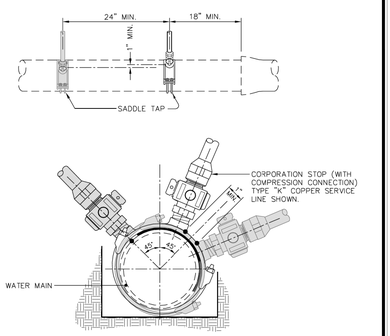

NOTES:
1. If 2 taps are made on each side of the main there shall be a minimum of 24" horizontal separation. Multiple taps on the same side shall have a minimum 24" horizontal separation and staggered a minimum of 1" vertically to prevent damage to the main.

TOWN of CLAYTON
USE WITH THE TOWN of CLAYTON STANDARD SPECIFICATIONS ONLY

STANDARD WATER TAP DETAIL (3/4" AND 1" TAPS)

SCALE: Not To Scale	DETAIL # 513.04
REVISION DATE: July, 2010	SHEET # 1 of 1

Details Provided by APPIAN Consulting Engineers — www.appianengineers.com

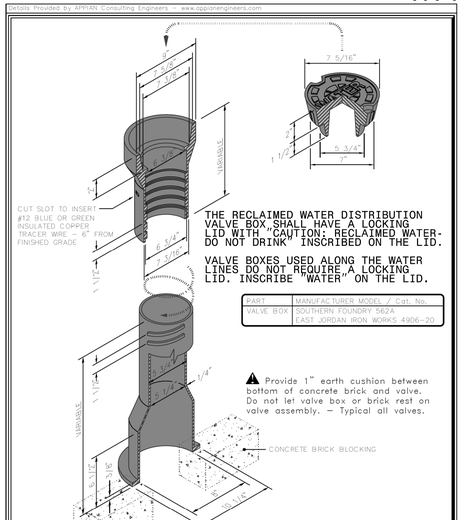

THE RECLAIMED WATER DISTRIBUTION VALVE BOX SHALL HAVE A LOCKING LID WITH "CAUTION: RECLAIMED WATER- DO NOT DRINK" INSCRIBED ON THE LID.

VALVE BOXES USED ALONG THE WATER LINES DO NOT REQUIRE A LOCKING LID. INSCRIBE "WATER" ON THE LID.

PART	MANUFACTURER MODEL / Cat. No.
VALVE BOX	SOUTHERN FOUNDRY 562A EAST JORDAN IRON WORKS 4906-20

⚠ Provide 1" earth cushion between bottom of concrete brick and valve. Do not let valve box or brick rest on valve assembly. — Typical all valves.

NOTES:
1. Use heavy duty traffic lid marked "WATER" OR "CAUTION: RECLAIMED WATER- DO NOT DRINK"

TOWN of CLAYTON
USE WITH THE TOWN of CLAYTON STANDARD SPECIFICATIONS ONLY

STANDARD SCREW VALVE BOX DETAIL

SCALE: Not To Scale	DETAIL # 513.01
REVISION DATE: APRIL, 2014	SHEET # 1 of 1

Details Provided by APPIAN Consulting Engineers — www.appianengineers.com 08/06/2010 — 10:44:15 AM

PART	MANUFACTURER MODEL / Cat. No.
BUT. VALVE	CLOW (M&H) / 4500-01 FLANGED MUELLER / LINSEAL 111 B3211-20 FLANGED DEZURIK / M-SERIES

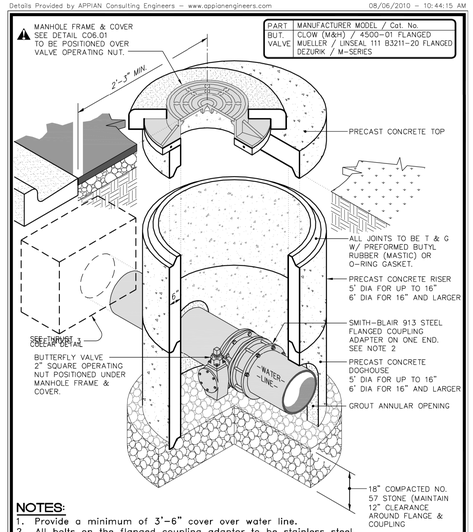

NOTES:
1. Provide a minimum of 3'-6" cover over water line.
2. All bolts on the flanged coupling adaptor to be stainless steel.
3. Thrust collar without rodding to be provided on both sides of manhole. See detail 512.02.

TOWN of CLAYTON
USE WITH THE TOWN of CLAYTON STANDARD SPECIFICATIONS ONLY

BUTTERFLY VALVE (16" and LARGER) in PRECAST MANHOLE

SCALE: Not To Scale	DETAIL # 513.09
REVISION DATE: July, 2010	SHEET # 1 of 2

Details Provided by APPIAN Consulting Engineers — www.appianengineers.com

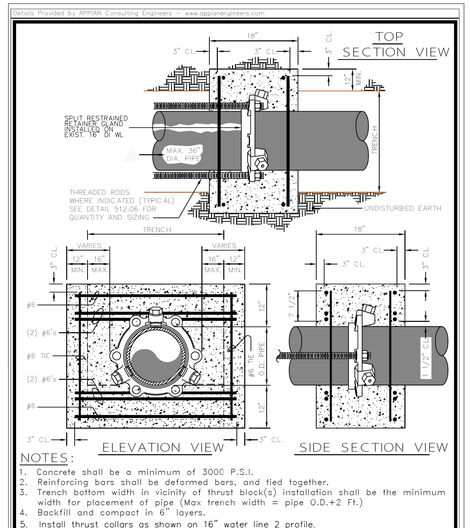

NOTES:
1. Concrete shall be a minimum of 3000 P.S.I.
2. Reinforcing bars shall be deformed bars, and tied together.
3. Trench bottom width in vicinity of thrust block(s) installation shall be the minimum width for placement of pipe (Max trench width = pipe O.D.+2 Ft.)
4. Backfill and compact in 6" layers.
5. Install thrust collars as shown on 16" water line 2 profile.
6. Install thrust collars on existing 16" water prior to installing the proposed 16" water line

TOWN of CLAYTON
USE WITH THE TOWN of CLAYTON STANDARD SPECIFICATIONS ONLY

THRUST COLLAR & BLOCKING with WEDGE ACTION RESTRAINER GLAND

SCALE: Not To Scale	DETAIL # 512.01
REVISION DATE: April, 2013	SHEET # 1 of 1

Details Provided by APPIAN Consulting Engineers — www.appianengineers.com 08/06/2010 — 10:41:48 AM

TIE ROD ANCHORS DATUM

PIPE SIZE (INCHES)	ROD DIAMETER	NUMBER OF SS RODS REQUIRED
TEST PRESSURE = 150 PSI		
6	3/4"	2
8	3/4"	2
10	3/4"	2
12	3/4"	4
16	3/4"	6
20	3/4"	8
24	3/4"	8
30	1"	10
36"	1"	12
TEST PRESSURE = 200 PSI		
6	3/4"	2
8	3/4"	2
10	3/4"	4
12	3/4"	6
16	3/4"	8
20	3/4"	12
24	3/4"	10
30	1"	14
36"	1"	16

316 GRADE STAINLESS STEEL (ALL THREAD) RODS

TOWN of CLAYTON
USE WITH THE TOWN of CLAYTON STANDARD SPECIFICATIONS ONLY

TIE ROD ANCHORS DATUM CHART

SCALE: Not To Scale	DETAIL # 512.06
REVISION DATE: July, 2010	SHEET # 1 of 1

Details Provided by APPIAN Consulting Engineers — www.appianengineers.com

PART	MANUFACTURER MODEL / Cat. No.
METER BOX	SOUTHERN FOUNDRY / MBX-1 EAST JORDAN IRON WORKS / V-8404-1 CAPITAL FOUNDRY/MBX-1 OR APPROVED EQUAL
METER SETTER	FORD/VBHC72-12W-44-33-Q(5/8"x3/4") NL FORD/VBHC74-15W-44-44-Q (1") NL MUELLER / B-2470-2A (12" HEIGHT) NL
METER	INSTALLED BY CLAYTON UPON PAYMENT OF FEES
TAPPING	SEE DETAIL 513.04

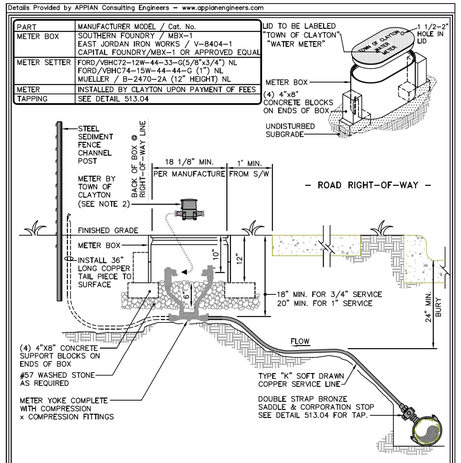

NOTES:
1. Contractor to place meter box in non-traffic area only.
2. Meter must be level across meter connections.
3. Lock setter with highfield security prod. part#93210142 & 93280148 after waterline testing is completed.

TOWN of CLAYTON
USE WITH THE TOWN of CLAYTON STANDARD SPECIFICATIONS ONLY

3/4" & 1" WATER METER SERVICE DETAIL

SCALE: Not To Scale	DETAIL # 519.01
REVISION DATE: OCT., 2014	SHEET # 1 of 2

DLI: NOV-2021 623
PROJECTS\2021\A2021302.00 SEPI Shotwell Road\Design\Utilities\Engineering\UC\Proj\80074_Ut_dtl_UC3C_psh.dgn
USERNAME
$$$

DocuSign Envelope ID: 10E15621-A93A-4B30-8DFE-A58114A5963A

NOT TO SCALE

HINDE ENGINEERING
License No. C-2639
401 Harrison Oaks Blvd., Suite 145 Cary, NC 27513

DOCUMENT NOT CONSIDERED FINAL UNLESS ALL SIGNATURES COMPLETED

PROJECT REFERENCE NO.	SHEET NO.
80074	UC-3D
DESIGNED BY: JKC	
DRAWN BY: JKC	
CHECKED BY: CLS	
APPROVED BY: CDB	
REVISED:	
NORTH CAROLINA DEPARTMENT OF TRANSPORTATION	
UTILITIES ENGINEERING SEC. PHONE:(919)707-6690 FAX:(919)250-4151	UTILITY CONSTRUCTION PLANS ONLY

NORTH CAROLINA PROFESSIONAL SEAL 023041 ENGINEER COREY D. BOUSQUET
DocuSigned by: Corey D. Bousquet, P.E.
BE23F928878C49A...
8/4/2021

UTILITY CONSTRUCTION

PROJECT TYPICAL DETAILS

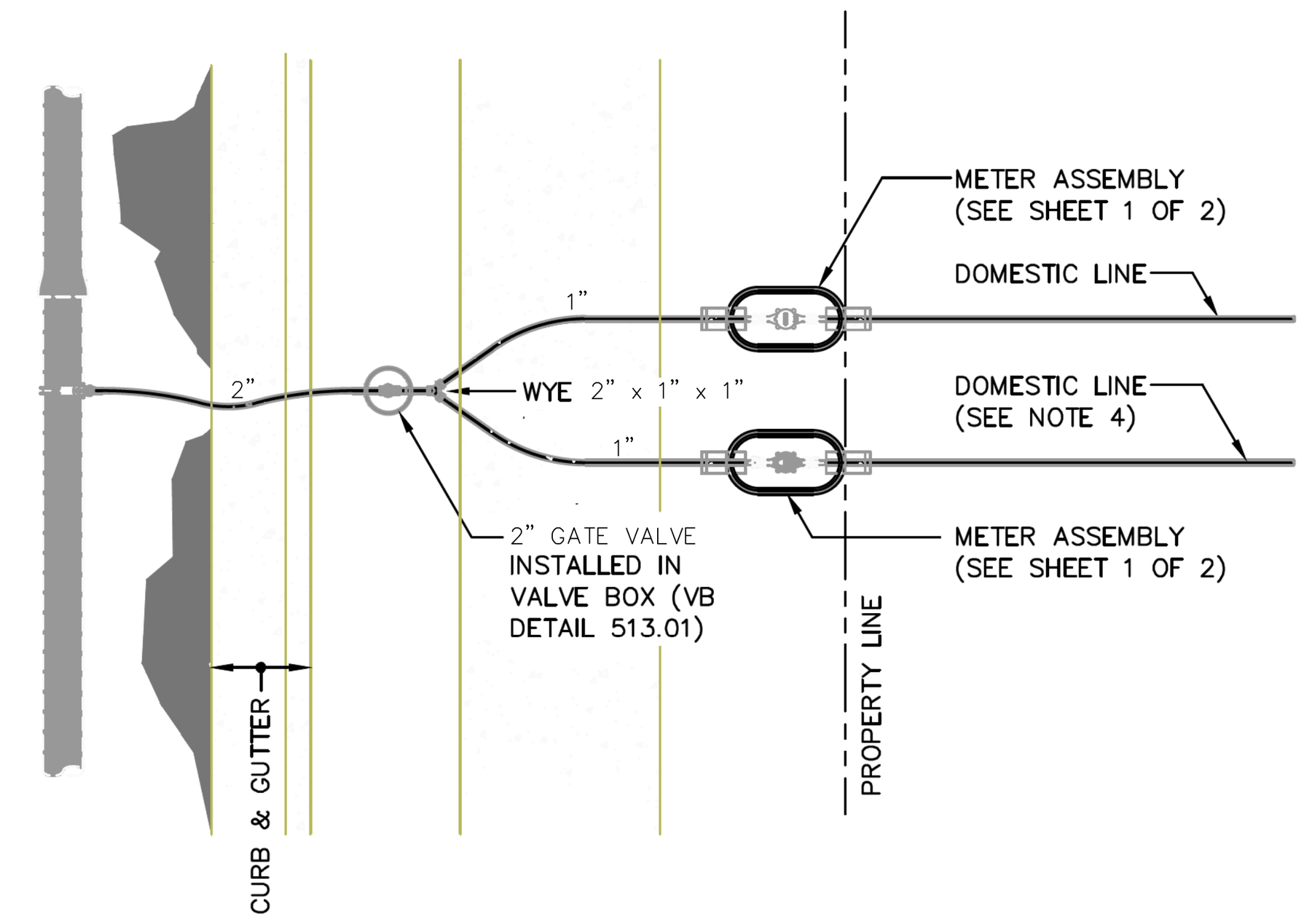

NOTES:
1. See detail 513.03 for top of valve box treatment.
2. See detail sheet 1 of 2 for water meter assembly.
3. This detail to be used when directed by Town Engineer.

TOWN of CLAYTON
USE WITH THE TOWN of CLAYTON STANDARD SPECIFICATIONS ONLY
TAP for DUPLEX SERVICE or IRRIGATION USE
SCALE: Not To Scale | DETAIL # 2519.01 | REVISION DATE: July, 2010 | SHEET #: 2 of 2

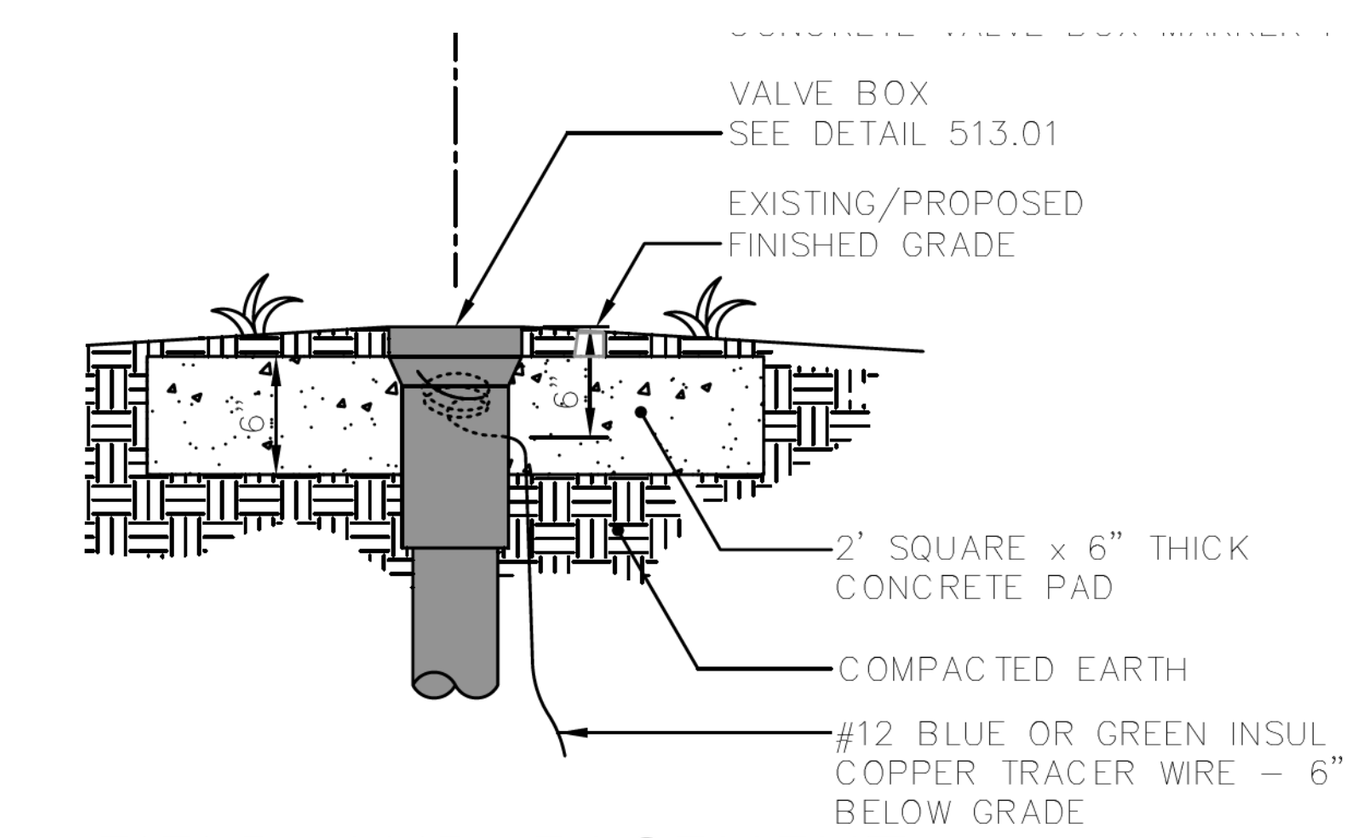

FIELD AND EASEMENT OR SIDE OF ROAD LOCATION

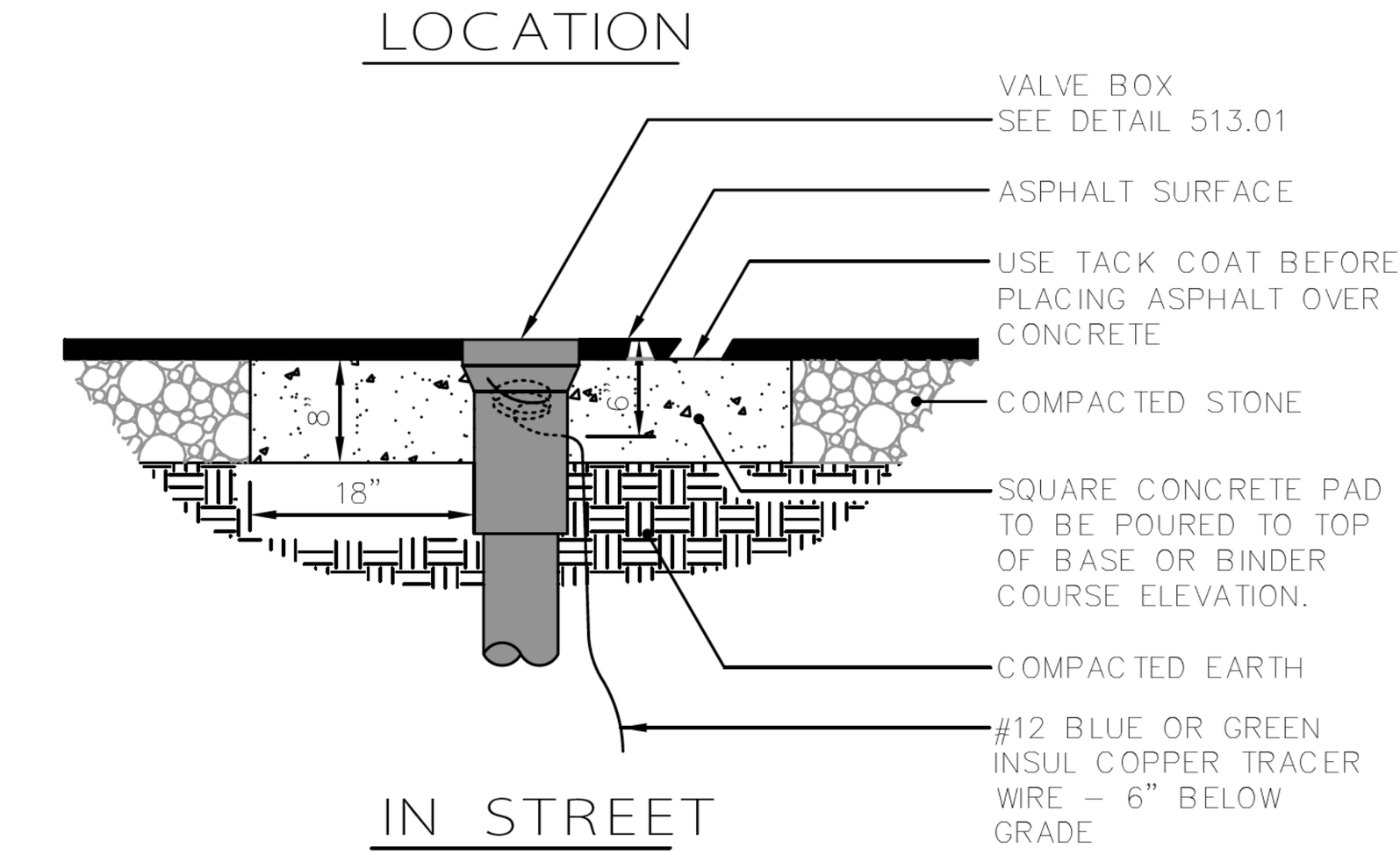

IN STREET LOCATION

NOTES:
1. Concrete to be minimum 3,000 PSI @ 28 days.

TOWN of CLAYTON
USE WITH THE TOWN of CLAYTON STANDARD SPECIFICATIONS ONLY
VALVE, VALVE BOX, AND MARKER INSTALLATION DETAIL
SCALE: Not To Scale | DETAIL # 2513.03 | REVISION DATE: APRIL, 2014 | SHEET #: 1 of 1

Details Provided by APPIAN Consulting Engineers – www.appianengineers.com 08/06/2010 – 10:40:13 AM

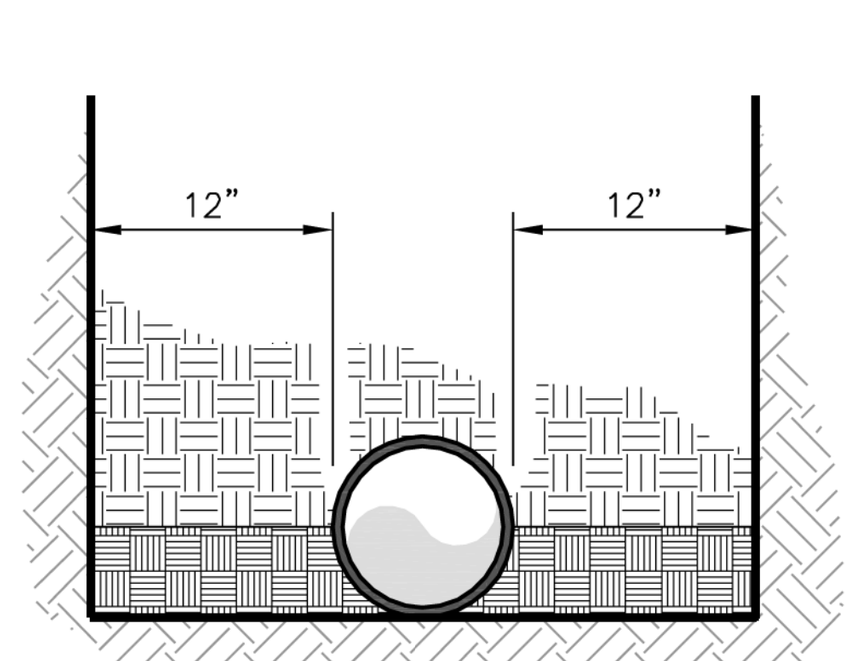

TYPE 1
FLAT BOTTOM TRENCH WITH BACKFILL LIGHTLY CONSOLIDATED TO CENTERLINE OF PIPE (FLAT BOTTOM IS DEFINED AS UNDISTURBED EARTH)

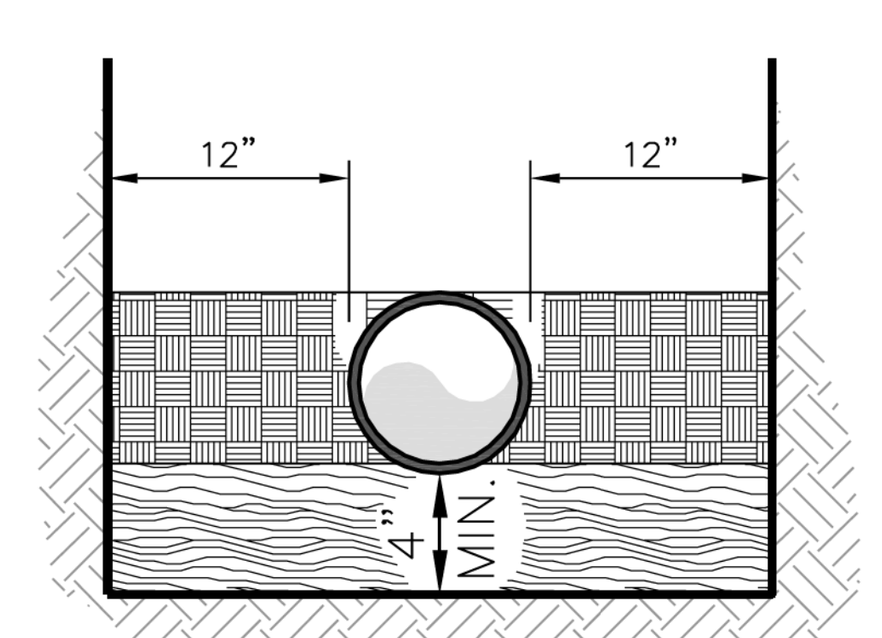

TYPE 2
PIPE BEDDED IN 4" MINIMUM SAND OR LOOSE SOIL (NOTE 5) TO A DEPTH OF 1/8 PIPE DIA. WITH BACKFILL COMPACTED TO TOP OF PIPE

NOTES:
1. For normal pipe sizes 14 inch and larger, consideration should be given to the use of laying conditions other than Type 1.
2. Consideration of the pipe-zone embedment conditions included in this figure may be influenced by factors other than pipe strength. For additional information on pipe bedding and backfill, see ANSI/AWWA C600.
3. See detail 511.01 for unsuitable trench subgrade requirements.
4. See Specifications Section 02275, Section 2.1.2 for pipe bedding definitions.
5. Loose soil shall be either native soil excavated from trench or borrow, both conforming in composition to "Select Earth Backfill" as defined in Specifications Section 02275, Part 2 – PRODUCTS.

TOWN of CLAYTON
USE WITH THE TOWN of CLAYTON STANDARD SPECIFICATIONS ONLY
WATER MAIN EMBEDMENT DETAILS
SCALE: Not To Scale | DETAIL # 2511.02 | REVISION DATE: July, 2010 | SHEET #: 1 of 4

Details Provided by APPIAN Consulting Engineers – www.appianengineers.com 08/06/2010 – 10:40:00 AM

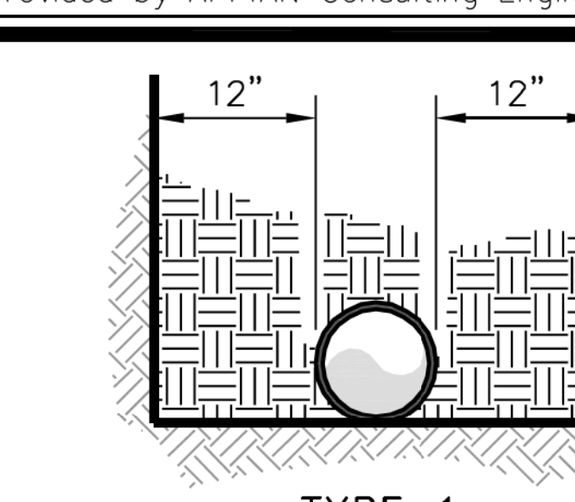

TYPE 1
(NOTE 1)
FLAT BOTTOM TRENCH WITH LOOSE DIRT (FLAT BOTTOM IS DEFINED AS UNDISTURBED EARTH)

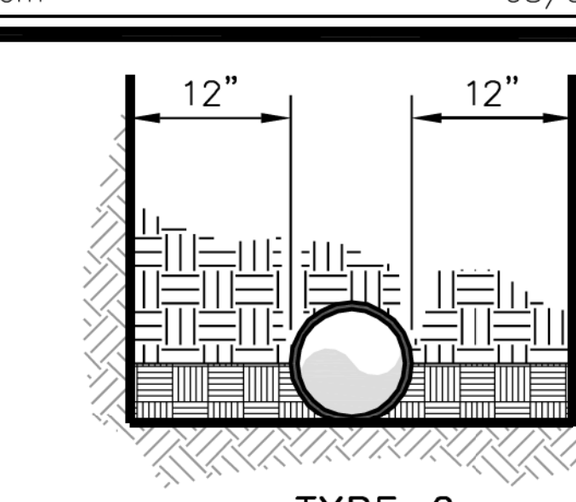

TYPE 2
FLAT BOTTOM TRENCH WITH BACKFILL LIGHTLY CONSOLIDATED TO CENTERLINE OF PIPE (FLAT BOTTOM IS DEFINED AS UNDISTURBED EARTH)

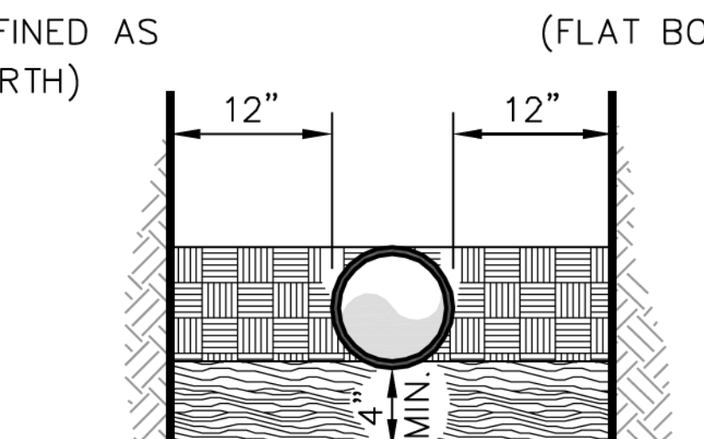

TYPE 3
PIPE BEDDED IN 4" MINIMUM LOOSE SOIL WITH BACKFILL LIGHTLY CONSOLIDATED TO TOP OF PIPE (LOOSE SOIL IS DEFINED AS NATIVE SOIL EXCAVATED FROM THE TRENCH, FREE OF ROCKS, ORGANIC MATERIAL, FOREIGN MATERIALS AND FROZEN EARTH)

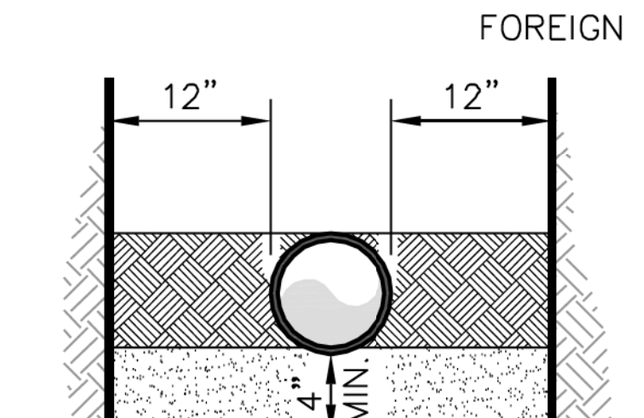

TYPE 4
PIPE BEDDED IN SAND, GRAVEL, or CRUSHED STONE TO A DEPTH OF 1/8 PIPE DIAMETER, 4" MINIMUM. WITH BACKFILL COMPACTED TO TOP OF PIPE. (APPROXIMATELY 80 PERCENT STANDARD PROCTOR, AASHTO T-99)

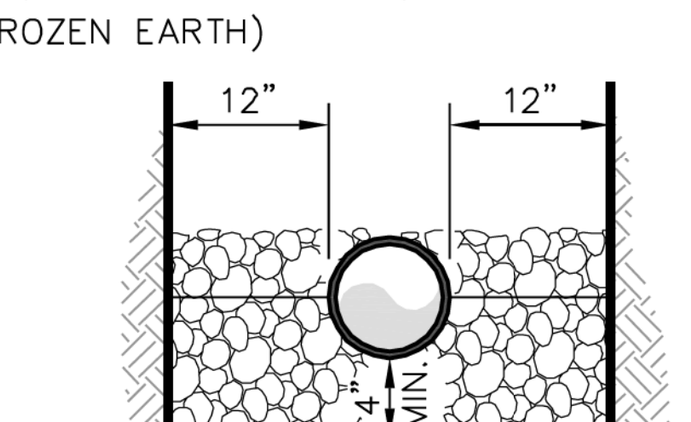

TYPE 5
PIPE BEDDED TO IT'S CENTERLINE IN COMPACTED GRANULAR MATERIAL, 4" MINIMUM UNDER PIPE. COMPACTED GRANULAR OR SELECT MATERIAL TO TOP OF PIPE. (APPROXIMATELY 90 PERCENT STANDARD PROCTOR, AASHTO T-99) (SELECT MATERIAL IS DEFINED AS NATIVE SOIL EXCAVATED FROM THE TRENCH, FREE OF ROCKS, ORGANIC MATERIAL, FOREIGN MATERIALS AND FROZEN EARTH)

NOTES:
1. For normal water pipe sizes 14 inch and larger, consideration should be given to the use of laying conditions other than Type 1.
2. Consideration of the pipe-zone embedment conditions included in this figure may be influenced by factors other than pipe strength. For additional information on pipe bedding and backfill, see ANSI/AWWA C600.

TOWN of CLAYTON
USE WITH THE TOWN of CLAYTON STANDARD SPECIFICATIONS ONLY
PIPE EMBEDMENT DETAILS
SCALE: Not To Scale | DETAIL # 2511.02 | REVISION DATE: July, 2010 | SHEET #: 2 of 4

Details Provided by APPIAN Consulting Engineers – www.appianengineers.com 08/06/2010 – 10:39:49 AM

TABLE 10.7 – DESCRIPTION OF MATERIAL CLASSIFICATION (As Defined in ASTM 2321)

Class	Type	Soil Symbol Group	Description ASTM D 2487	Percentage Passing Sieve Sizes 1.5 in (40 mm)	No. 4 (4.75 mm)	No. 200 (0.075 mm)	Atterberg Limits LL	PL	Coefficients Uniformity Cu	Curvature Cc
IA	Manufactured Aggregates: open graded, clean	None	Angular, crushed stone or rock, crushed gravel, broken coral, crushed slag, cinders or shells: large void content, contain little or no fines	100	≤10%	<5	Non Plastic			
IB	Manufactured, Processed Aggregates: dense graded, clean	None	Angular, crushed stone (or other Class IA materials) and stone/sand mixtures with gradations selected to minimize migration of adjacent soils: contain little or no fines	100	≤50%	<5	Non Plastic			
II	Coarse-Grained Soils, clean	GW	Well-graded gravels and gravel-sand mixtures; little or no fines	100	<50% of Coarse Fraction	<5	Non Plastic		>4	1 to 3
		GP	Poorly-graded gravels and gravel-sand mixtures; little or no fines						<4	<1 or >3
		SW	Well-graded sands and gravelly sands; little or no fines		>50% of Coarse Fraction				>6	1 to 3
		SP	Poorly-graded sands and gravelly sands; little or no fines						<6	<1 or >3
	Coarse-Grained Soils, borderline clean to w/fines	e.g. GW-GC, SP-SM	Sands and gravels which are borderline between clean and with fines	100	Varies	5% to 12%	Non Plastic		Same as for GW, GP, SW and SP	
III	Coarse-Grained Soils with Fines	GM	Silty gravels, gravel-sand-silt mixtures	100	>50% of Coarse Fraction	>12% to <50%		<4 or <"A" Line		
		GC	Clayey gravels, gravel-sand-clay mixtures					<7 or >"A" Line		
		SM	Silty sands, sand-silt mixtures		>50% of Coarse Fraction			>4 or <"A" Line		
		SC	Clayey sands, sand-silt mixtures					>7 or >"A" Line		
IV	Fine-Grained Soils (inorganic)	ML	Inorganic silts and very fine sands, rock flour, silty or clayey fine sands, silts with slight plasticity	100	100	>50	<50	<4 or <"A" Line		
		CL	Inorganic clays of low to medium plasticity, gravely clays, sandy clays, silty clays, lean clays					>7 or >"A" Line		
IVB	Fine-Grained Soils (inorganic)	MH	Inorganic silts, micaceous or diatomaceous fine sandy or silty soils, elastic silts	100	100	>50	>50	<"A" Line		
		CH	Inorganic clays of high plasticity, fat clays					>"A" Line		
V	Organic Soils	OL	Organic silts and organic silty clays of low plasticity	100	100	>50	<50	<4 or <"A" Line		
		OH	Organic clays of medium to high plasticity, organic silts				>50	<"A" Line		
	Highly Organic	PT	Peat and other high organic soils							

TOWN of CLAYTON
USE WITH THE TOWN of CLAYTON STANDARD SPECIFICATIONS ONLY
PIPE EMBEDMENT DETAILS
SCALE: Not To Scale | DETAIL # 2511.02 | REVISION DATE: July, 2010 | SHEET #: 3 of 4

Details Provided by APPIAN Consulting Engineers – www.appianengineers.com 08/06/2010 – 10:39:36 AM

TABLE 10.8
RECOMMENDATIONS FOR INSTALLATION AND USE OF SOILS AND AGGREGATES FOR FOUNDATION, EMBEDMENT AND BACKFILL

	Soil Class (see Table 10.7)A CLASS IA	CLASS IB	CLASS II	CLASS III	CLASS IV-A
General Recommendations and Restrictions	Do not use where conditions may cause migration of fines from adjacent soil and loss of pipe support. Suitable for use as a drainage blanket and underdrain in rock cuts where adjacent material is suitably graded.	Process materials as required to obtain gradation which will minimize migration of adjacent materials. Suitable for use as drainage blanket and underdrain.	Where hydraulic gradient exists check gradation to minimize migration. "Clean" groups suitable for use as drainage blanket and underdrain.	Do not use where water conditions in trench may cause instability.	Obtain geotechnical evaluation of proposed material. May not be suitable under high earth fills, surface applied wheel loads and under heavy vibratory compactors and tampers. Do not use where water conditions in trench may cause instability.
Foundation	Suitable as foundation and for replacing over-excavated and unstable trench bottom as restricted above. Install and compact in 6-in. maximum layers.	Suitable as foundation and for replacing over-excavated and unstable trench bottom. Install and compact in 6-in. maximum layers.	Suitable as foundation and for replacing over-excavated and unstable trench bottom as restricted above. Install and compact in 6-in. maximum layers.	Suitable as foundation and for replacing over-excavated and unstable trench bottom as restricted above. Do not use in thickness greater than 12 in. total. Install and compact in 6-in. maximum layers.	Suitable only in undisturbed condition and where trench is dry. Remove all loose material and provide firm, uniform trench bottom before bedding is placed.
Bedding	Suitable as restricted above. Install in 6-in. maximum layers. Level final grade by hand. Minimum depth 4 in. (6 in. in rock cuts).	Install and compact in 6-in. maximum layers. Level final grade by hand. Minimum depth 4 in. (6 in. in rock cuts).	Suitable as restricted above. Install and compact in 6-in. maximum layers. Level final grade by hand. Minimum depth 4 in. (6 in. in rock cuts).	Suitable only in dry trench conditions. Install and compact in 6-in. maximum layers. Level final grade by hand. Minimum depth 4 in. (6 in. in rock cuts).	Suitable only in dry trench conditions and when optimum placement and compaction control is maintained. Install and compact in 6-in. maximum layers. Level final grade by hand. Minimum depth 4 in. (6 in. in rock cuts).
Haunching	Suitable as restricted above. Install in 6-in. maximum layers. Work in around pipe by hand to provide uniform support.	Install and compact in 6-in. maximum layers. Work in around pipe by hand to provide uniform support.	Suitable as restricted above. Install and compact in 6-in. maximum layers. Work in around pipe by hand to provide uniform support.	Suitable as restricted above. Install and compact in 6-in. maximum layers. Work in around pipe by hand to provide uniform support.	Suitable only in dry trench conditions and when optimum placement and compaction control is maintained. Install and compact in 6-in. maximum layers. Work in around pipe by hand to provide uniform support.
Initial Backfill	Suitable as restricted above. Install to a minimum of 6 in. above pipe crown.	Install and compact to a minimum of 6 in. above pipe crown.	Suitable as restricted above. Install and compact to a minimum of 6 in. above pipe crown.	Suitable as restricted above. Install and compact to a minimum of 6 in. above pipe crown.	Suitable as restricted above. Install and compact to a minimum of 6 in. above pipe crown.
Final Backfill	Compact as required by the engineer.	Compact as required by the engineer.	Compact as required by the engineer.	Compact as required by the engineer.	Suitable as restricted above. Compact as required by the engineer.

TOWN of CLAYTON
USE WITH THE TOWN of CLAYTON STANDARD SPECIFICATIONS ONLY
PIPE EMBEDMENT DETAILS
SCALE: Not To Scale | DETAIL # 2511.02 | REVISION DATE: July, 2010 | SHEET #: 4 of 4

04-AUG-2021 13:17
S:\Server Files\PROJECTS\2021\A2021302.00_SEPI_Shotwell Road\Design\Utilities\Engineering\UC\Proj\80074_Ut_dtl_UC3D_psh.dgn
$$$$USERNAME$$$$

DocuSign Envelope ID: 002E7AD3-A868-454D-BA3C-BEA4006A83B2

HINDE ENGINEERING
License No. C-2639
401 Harrison Oaks Blvd., Suite 220 Cary, NC 27513

DOCUMENT NOT CONSIDERED FINAL UNLESS ALL SIGNATURES COMPLETED

PROJECT REFERENCE NO.	SHEET NO.
80074	UC-4

DESIGNED BY:	JKC
DRAWN BY:	JKC
CHECKED BY:	CLS
APPROVED BY:	CDB
REVISED:	

NORTH CAROLINA DEPARTMENT OF TRANSPORTATION
UTILITIES ENGINEERING SEC.
PHONE:(919)707-6690
FAX:(919)250-4151

NORTH CAROLINA PROFESSIONAL ENGINEER SEAL 052917 CASEY D BOUSQUET
DocuSigned by: Casey D. Bousquet, PE
BF928878C49A...
11/11/2021
UTILITY CONSTRUCTION PLANS ONLY

UTILITY CONSTRUCTION

NAD 83/NA 2011

1-12" VALVE (RELSILIENT WEDGE GATE VALVE)

PROP. 513' OF 12" WATER LINE
(RJ, DI PC 350)
1-12" VALVE (RELSILIENT WEDGE GATE VALVE)
SEE 12" WATER LINE 1 ON SHEET UC-5 FOR PROFILE

1-12" VALVE (RELSILIENT WEDGE GATE VALVE)

ABANDON 385' OF 12" UTILTIY PIPE

PROP. 11' OF WATER SERVICE LINE
(2" COPPER, TYPE K)
1-2" VALVE (RESILIENT WEDGE GATE VALVE)
RELOCATE 2-1" WATER METERS AND
2-1" RPZ BACKFLOW PREVENTION ASSEMBLIES
42' OF WATER SERVICE LINE
(1" COPPER, TYPE K)
SEE DETAILS ON SHEET UC-3A, UC-3C AND UC-3D

PROP. 29' OF FIRE HYDRANT LEG
(RJ, DI PC 350)
1-6" VALVE (RESILIENT WEDGE GATE VAVLE)

PROP. 25' OF 16" WATER LINE
(RJ, DI PC 250)
1-16" VALVE (BUTTERFLY VALVE & MANHOLE)
SEE 16" WATER LINE 2 ON SHEET UC-5 FOR PROFILE

16" X 16" x 6" RJ DI TEE

16" X 16" X 12" RJ DI TEE

PROP. 33' OF 16" WATER LINE
(RJ, DI PC 250)
TIE-IN PROP. 16" WL DIRECTLY TO THE EXISTING 16" BUTTERFLY WITH RESTRAINED RETAINER GLAND
SEE 16" WATER LINE 2 ON SHEET UC-5 FOR PROFILE

ABANDON UTILITY MANHOLE (REMOVE)

ABANDON 58' OF 16" UTILTIY PIPE (REMOVE)

PROP. 185' OF 8" RECLAIMED WATER DISTIBUTION LINE (RJ, DI PC 350)
RELOCATE AIR RELEASE VALVE WITH NEW MANHOLE
SEE DETAIL ON SHEET UC-3B
1-8" RECLAIMED WATER DISTRIBUTION VALVE
SEE 8" RECLAIMED WATER DISTRIBUTION LINE 3 ON SHEET UC-6 FOR PROFILE

DETAIL 1
FALSE SUMP
(Not to Scale)

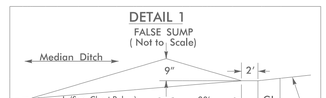

Ditch Grade	L	Ditch Grade	L
0.0% To 2.0%	20'	Over 4.0% To 6.0%	40'
Over 2.0% To 4.0%	30'	Over 6.0%	50'

FROM STA. 21+57 TO STA. 21+97 -L- MED

DETAIL 3
SPECIAL CUT DITCH
(Not to Scale)

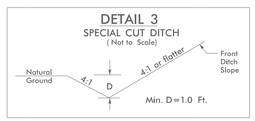

FROM STA. 11+50 TO STA. 14+00 -L- RT

NOTE:
THE ESTIMATED QUANTITY OF DUCTILE IRON RECLAIMED WATER DISTRIBUTION PIPE FITTINGS ON THIS PLAN SHEET IS 610 POUNDS. THE ACTUAL QUANTITY AND TYPE OF FITTINGS WILL VARY BASED ON FIELD CONDITIONS.

NOTE:
THE ESTIMATED QUANTITY OF DUCTILE IRON WATER PIPE FITTINGS ON THIS PLAN SHEET IS 3400 POUNDS. THE ACTUAL QUANTITY AND TYPE OF FITTINGS WILL VARY BASED ON FIELD CONDITIONS.

PLOT DATE: 29-NOV-2021 08:29
DESIGN FILE: C:\PROJECTS\2021\A20221302.00-SEP1 Shotwell Road\Design\Utilities\Engineering\UC\Proj\80074_Ut_rdy4_UC4_psh.dgn
USER NAME = $$$$
PLOT SCALE = $$$$

DocuSign Envelope ID: 002E7AD3-A868-454D-BA3C-BEA4006A83B2

HINDE ENGINEERING
License No. C-2639
401 Harrison Oaks Blvd., Suite 220 Cary, NC 27513

DOCUMENT NOT CONSIDERED FINAL UNLESS ALL SIGNATURES COMPLETED

PROJECT REFERENCE NO.	SHEET NO.
80074	UC-5
DESIGNED BY: JKC	
DRAWN BY: JKC	
CHECKED BY: CLS	
APPROVED BY: CDB	
REVISED:	

NORTH CAROLINA DEPARTMENT OF TRANSPORTATION
UTILITIES ENGINEERING SEC.
PHONE:(919)707-6690
FAX:(919)250-4151

NORTH CAROLINA PROFESSIONAL ENGINEER SEAL 123041 CASEY D BOUSQUET
DocuSigned by: Casey Bousquet, PE
B823F928878C49A...
11/11/2021

UTILITY CONSTRUCTION PLANS ONLY

UTILITY CONSTRUCTION

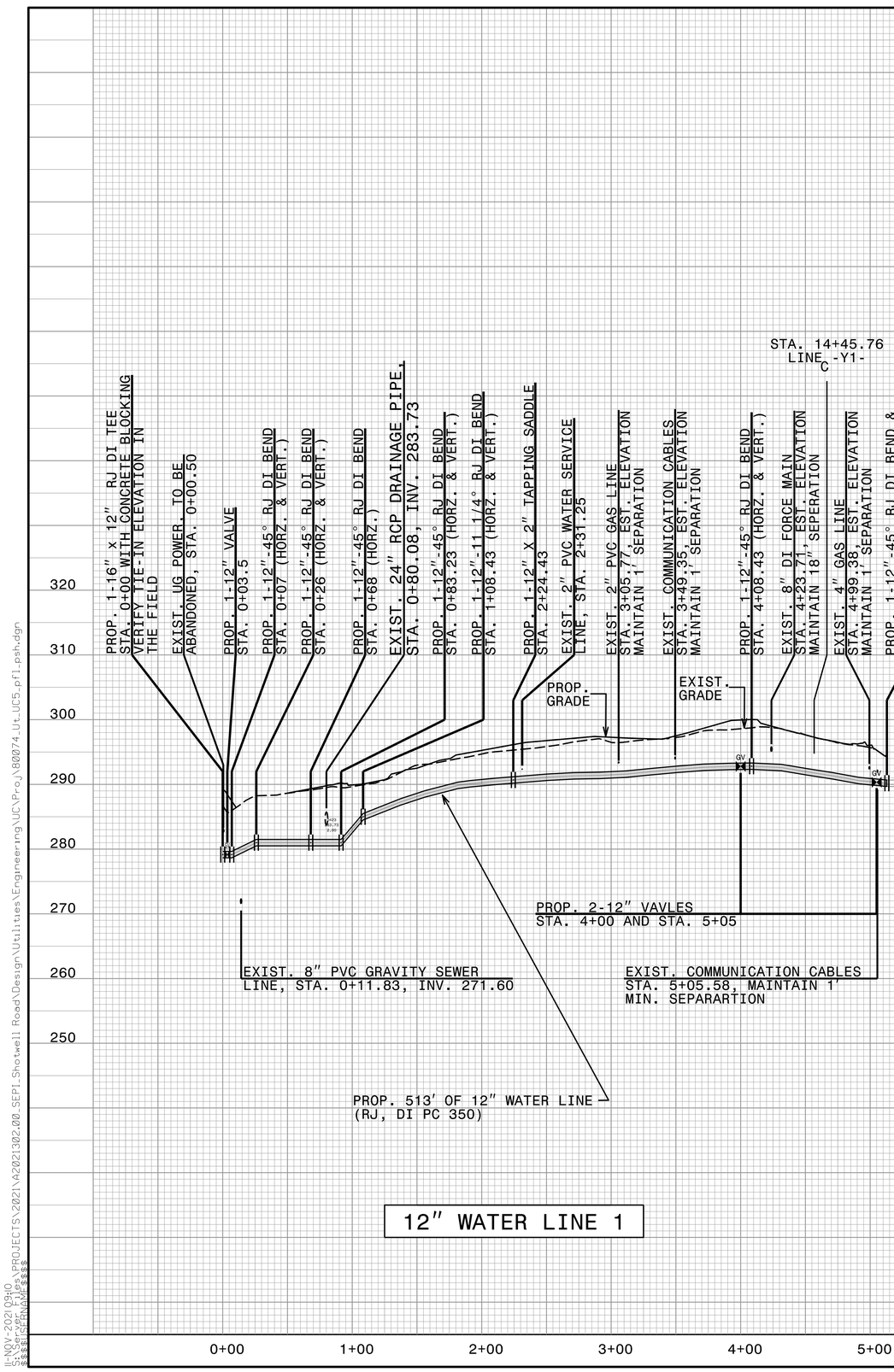

12" WATER LINE 1

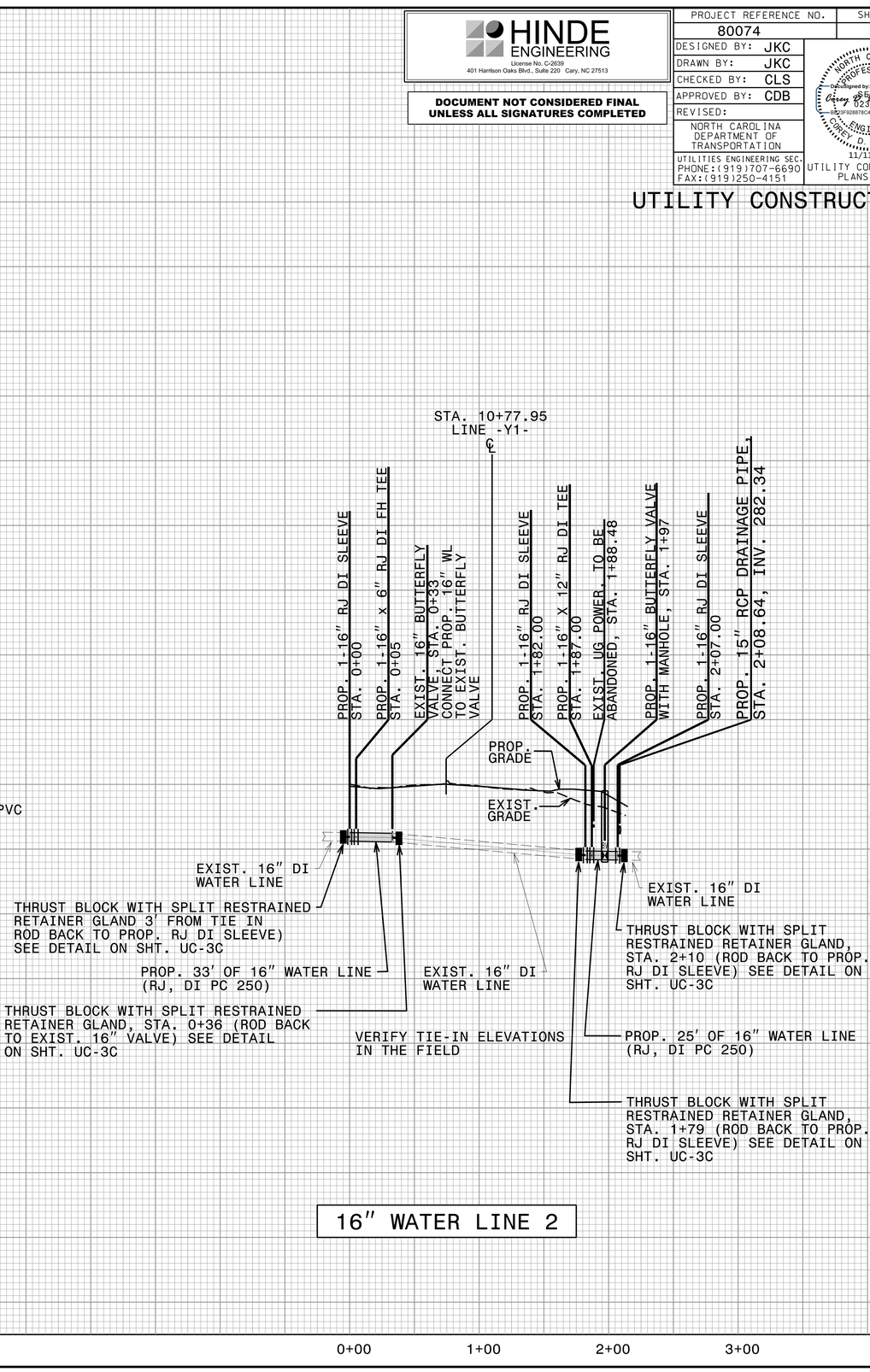

16" WATER LINE 2

11/NOV-2021 09:10
C:\Users\cbousquet\OneDrive - HINDE ENGINEERING\PROJECTS\2021\A2021302.00_SEP1_Shotwell Road\Design\Utilities\Engineering\UC\Proj\80074_Ut_UC5_pf1_psh.dgn
$$$$USERNAME$$$$

DocuSign Envelope ID: 002E7AD3-A868-454D-BA3C-BEA4006A83B2

HINDE ENGINEERING
License No. C-2639
401 Harrison Oaks Blvd., Suite 220 Cary, NC 27513

DOCUMENT NOT CONSIDERED FINAL UNLESS ALL SIGNATURES COMPLETED

PROJECT REFERENCE NO.	SHEET NO.
80074	UC-6

DESIGNED BY: JKC
DRAWN BY: JKC
CHECKED BY: CLS
APPROVED BY: CDB
REVISED:

NORTH CAROLINA DEPARTMENT OF TRANSPORTATION
UTILITIES ENGINEERING SEC.
PHONE:(919)707-6690
FAX:(919)250-4151

NORTH CAROLINA PROFESSIONAL SEAL 023041 ENGINEER CAREY D. BOUSQUET
Docusigned by: Carey D. Bousquet, P.E.
BE23F928878C49A...
11/11/2021
UTILITY CONSTRUCTION PLANS ONLY

UTILITY CONSTRUCTION

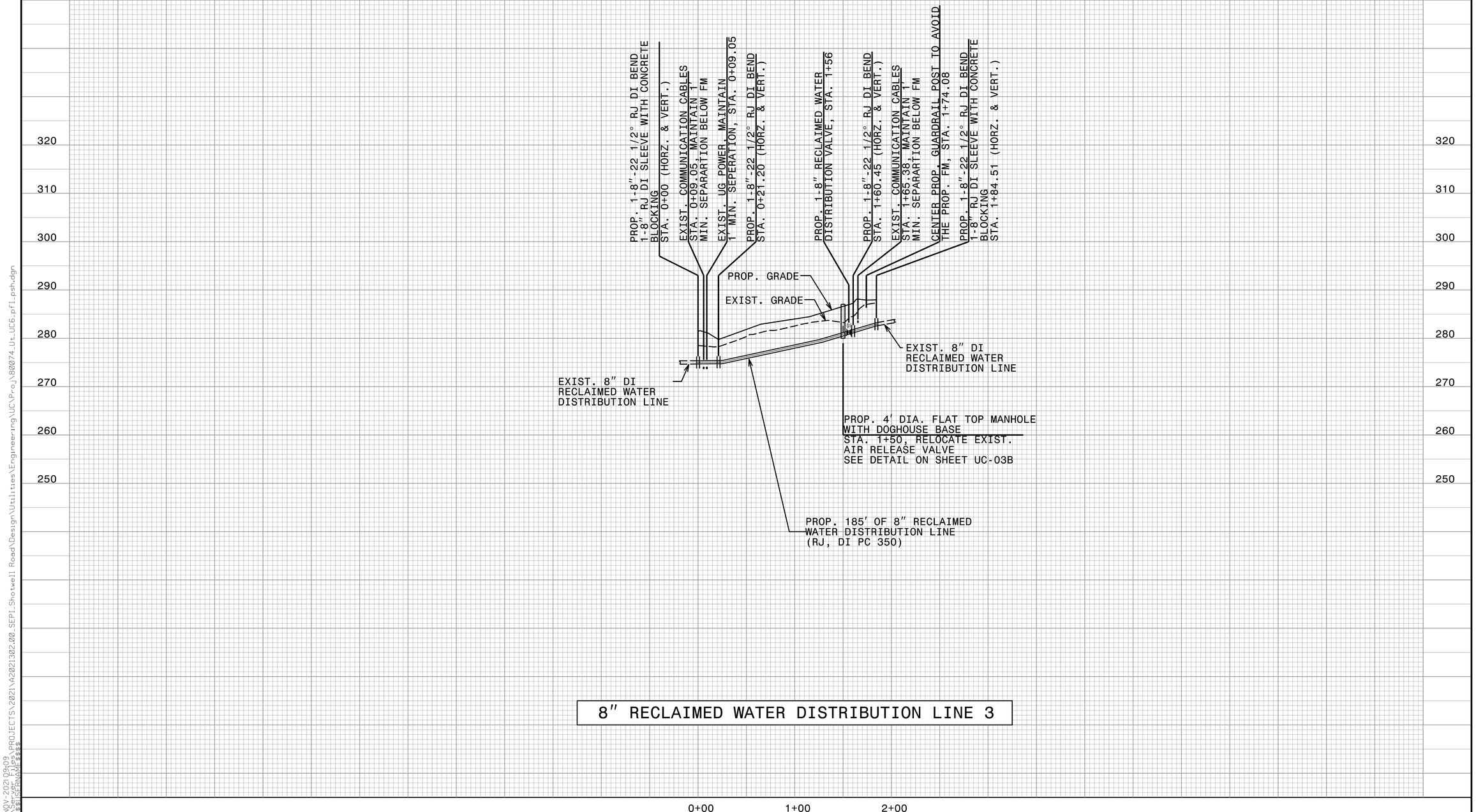

8" RECLAIMED WATER DISTRIBUTION LINE 3

11-NOV-2021 09:09
S:\Server Files\PROJECTS\2021\A2021302.00_SEPI_Shotwell Road\Design\Utilities\Engineering\UC\Proj\80074_Ut_UC6_pfl_psh.dgn
$$$$USERNAME$$$$

09/08/09

TIP PROJECT: 80074

T.I.P. NO.	SHEET NO.
80074	UO–1

NOTE:
ALL UTILITY WORK SHOWN ON THIS SHEET WILL BE DONE BY OTHERS. NO PAYMENT WILL BE MADE TO THE CONTRACTOR FOR UTILITY WORK SHOWN ON THIS SHEET.

See Sheet 1A For Index of Sheets
See Sheet 1B For Conventional Symbols
See Sheet 1C-1 Thru 1C-3 For Survey Control Sheets

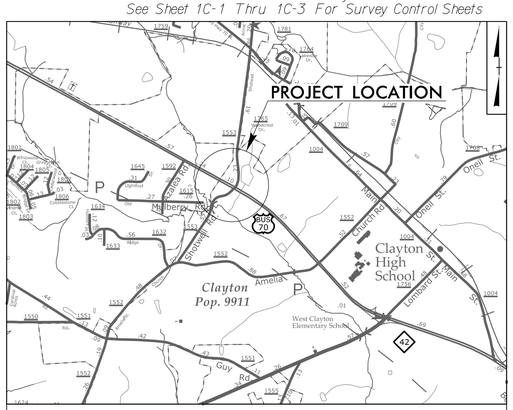

VICINITY MAP

STATE OF NORTH CAROLINA
DIVISION OF HIGHWAYS

UTILITIES BY OTHERS PLANS
JOHNSTON COUNTY

LOCATION: INTERSECTION OF SR 1553 (SHOTWELL ROAD) AND US 70 BUSINESS

TYPE OF WORK: ELECTRIC POWER DISTRIBUTION, GAS, TELEPHONE, AND CABLE TV

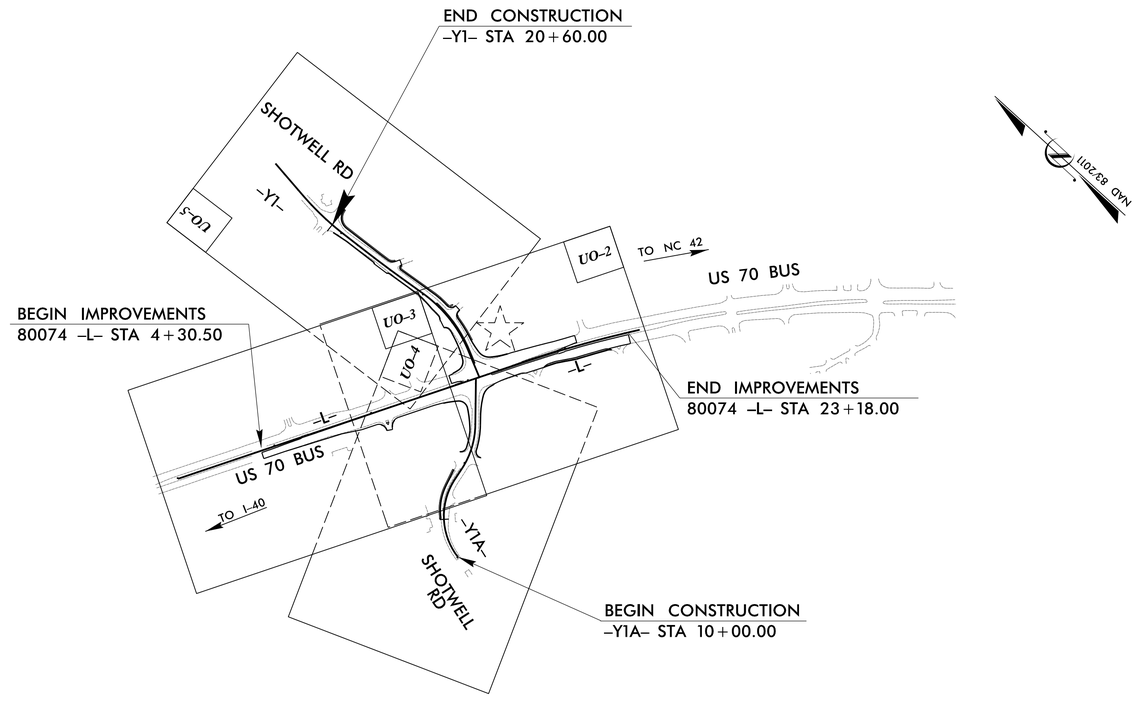

PRELIMINARY PLANS
DO NOT USE FOR CONSTRUCTION

GRAPHIC SCALES

50 25 0 50 100
PLANS

50 25 0 50 100
PROFILE (HORIZONTAL)

10 5 0 10 20
PROFILE (VERTICAL)

INDEX OF SHEETS

SHEET NO.:	*DESCRIPTION:*
UO–1	*TITLE SHEET*
UO–2 THRU UO–5	*UBO PLAN SHEETS*

UTILITY OWNERS WITH CONFLICTS

(A) DISTRIBUTION – DUKE ENERGY
(B) DISTRIBUTION – PIEDMONT NATURAL GAS
(C) COMMUNICATIONS – CENTURY LINK
(D) COMMUNICATIONS – CHARTER
(E) COMMUNICATIONS – VERIZON

PREPARED IN THE OFFICE OF:

SEPI Engineering & Construction, Inc.
1 Glenwood Avenue
Raleigh, NC 27603
Tel:919.789.9977
Fax:919.789.9591
License: C-2197

Ben Crawford, PE *CONSULTANT CONTACT #1*

DIVISION OF HIGHWAYS
UTILITIES UNIT
1555 MAIL SERVICES CENTER
RALEIGH NC 27699-1555
PHONE (919) 707-6690
FAX (919) 250-4151

Nabil Hamdan *UTILITIES REGIONAL ENGINEER*
Stephen Sealy *UTILITIES ENGINEER*
Bo Hemphill *UTILITIES AREA COORDINATOR*
Frank Zdelar *UTILITIES COORDINATOR*

10/22/2021
...\UBO_80074_Rdy_tsh.dgn
USER:tyounis

8/17/99

PROJECT REFERENCE NO.	SHEET NO.
80074	UO-2

UTILITIES BY OTHERS

NOTE:
ALL PROPOSED UTILITY WORK SHOWN ON THIS SHEET WILL BE DONE BY OTHERS. NO PAYMENT WILL BE MADE TO THE CONTRACTOR FOR PROPOSED UTILITY WORK SHOWN ON THIS SHEET.

SEPI Engineering & Construction, Inc.
1 Glenwood Avenue
Raleigh, NC 27603
Tel:919.789.9977
Fax:919.789.9591
License: C-2197

NAD 83/NA 2011

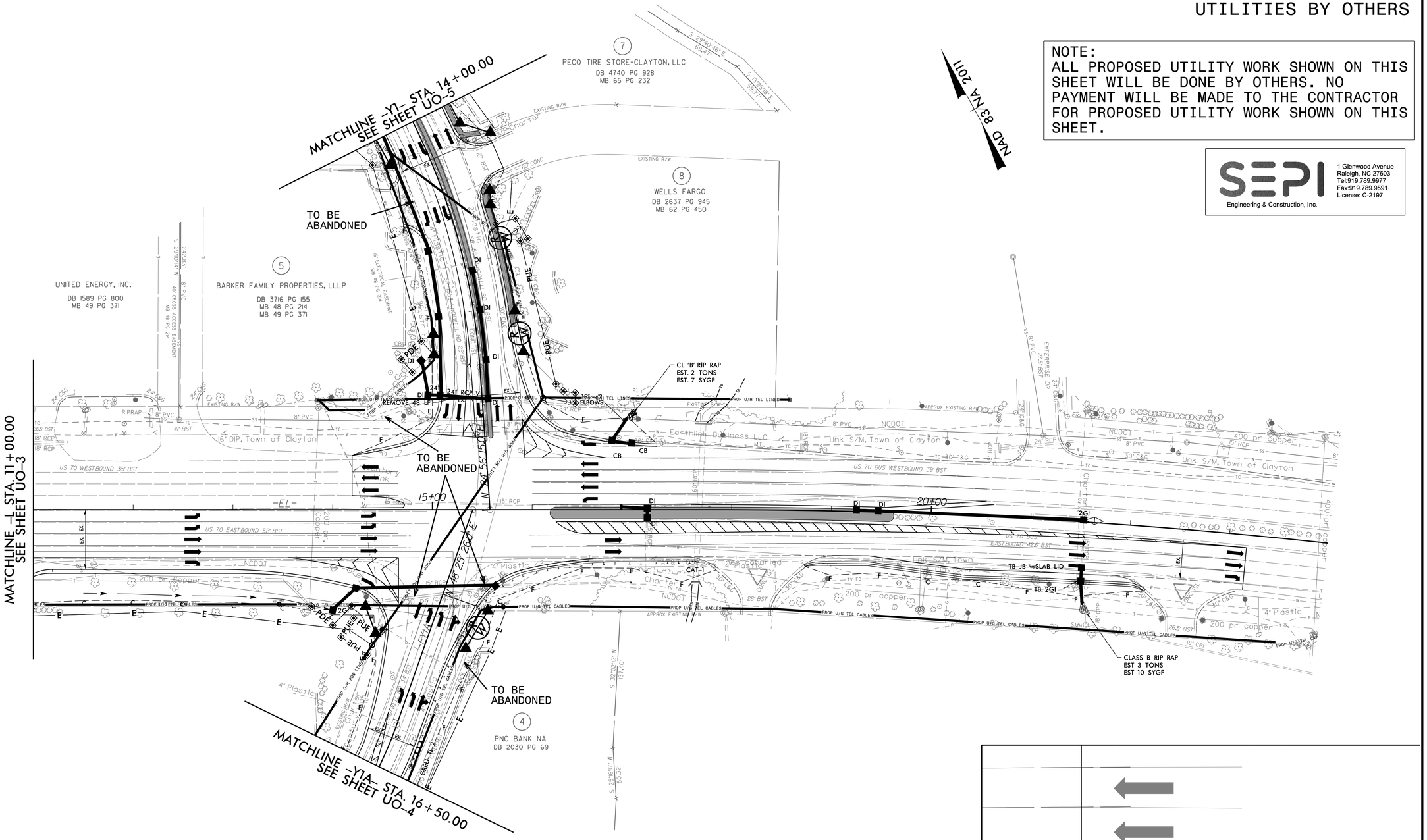

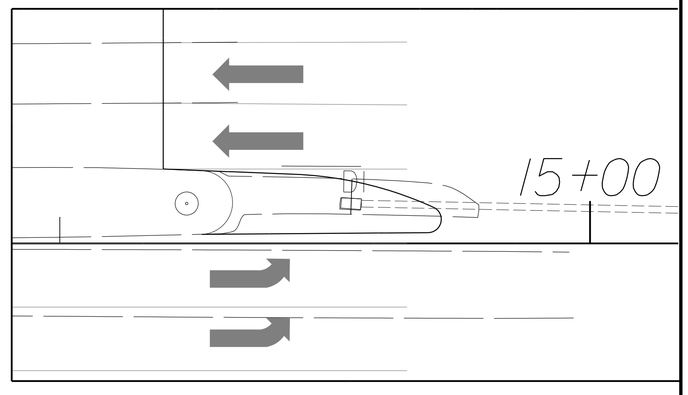

10/8/2021
USER:hbrown
...\80074_U5704B_Ut_4_UO_2.psh.dgn

8/17/99

PROJECT REFERENCE NO.	SHEET NO.
80074	UO-3

UTILITIES BY OTHERS

NOTE:
ALL PROPOSED UTILITY WORK SHOWN ON THIS SHEET WILL BE DONE BY OTHERS. NO PAYMENT WILL BE MADE TO THE CONTRACTOR FOR PROPOSED UTILITY WORK SHOWN ON THIS SHEET.

SEPI Engineering & Construction, Inc.
1 Glenwood Avenue
Raleigh, NC 27603
Tel:919.789.9977
Fax:919,789.9591
License: C-2197

NAD 83/NA 2011

-L- POT Sta. 0+00.00

BEGIN PROPOSED WIDENING
-L- STA.4+30.50

STALLINGS MILL APARTMENTS, LLC
DB 4424 PG 368
MB 69 PG 144
MB 84 PG 241

PRIVATE BMP AND ACCESS EASEMENT MB 84 PG 241

VARIABLE WIDTH PUBLIC UTILITY EASEMENT MB 84 PG 241

20' PUBLIC UTILITY EASEMENT MB 84 PG 241

Johnston County Public Utility

Earthlink Business LLC

-L- US 70 BUS.

0+00 5+00 10+00

S 61° 02' 24.2" E

200' EX. R/W

US HWY 70 BUS WEST 41' BST
US HWY 70 BUS WEST 36' BST
US HWY 70 BUS WEST 35' BST
US HWY 70 BUS WEST 31.5' BST
US HWY 70 BUS WEST 48' BST

1102 COLLAR AND EXTEND

1103 REMOVE 20 LF

CL 'I' RIP RAP
EST. 3 TONS
EST. 7 SYGF

TO BE ABANDONED

TIE TO EXISTING GUARDRAIL
-L- STA.4+30.50 RT.

400' LANE TRANSITION

100' TAPER

75' FULL LANE

200' TAPER

435' FULL LANE

SEE INSET

REMOVE

MATCHLINE -L STA. 11+00.00
SEE SHEET UO-2

JAMES W. CASH
DB 552 PG 347

TEDDY FOSTER BEDDINGFIELD
DB 528 PG 427
DB 895 PG 538

SHOTWELL 70 PARTNERS, LLC & CONWAY CENTRE, LLC
DB 3616 PG 920
MB 77 PG 495-496
MB 50 PG 160

HEALTH PROPERTIES INVESTMENTS, INC.
DB 4286 PG 499
MB 77 PG 495-496

SHOTWELL 70 PARTNERS, LLC & CONWAY CENTRE, LLC
DB 3616 PG 920
DB 1933 PG 754
MB 77 PG 495-496
MB 69 PG 144
MB 56 PG 54

1 SHOTWELL 70 PARTNERS, LLC & CONWAY CENTRE, LLC
DB 3616 PG 920
MB 77 PG 495-496
MB 50 PG 160

3 BALDIES RESTAURANT GROUP, LLC
DB 4359 PG 113
PB 77 PG 495
PB 77 PG 496

24' CROSS ACCESS EASEMENT MB 77 PG 495

36' CROSS ACCESS & UTILITY EASEMENT MB 77 PG 495

20' SEWER EASEMENT MB 50 PG 160

50' NATURAL GAS EASEMENT MB 77 PG 496

INSET

66'
55.25'
66.75'
EX.
12' 12' 12' 12'
4' PS
11.5' TYP.
REMOVE
EIP

10/8/2021
10:16:18 AM
U:\ERHB\Projects\80074-5704B_Ut_11_UO_3.psh.dgn

PROJECT REFERENCE NO.	SHEET NO.
80074	UO-4

UTILITIES BY OTHERS

NOTE:
ALL PROPOSED UTILITY WORK SHOWN ON THIS SHEET WILL BE DONE BY OTHERS. NO PAYMENT WILL BE MADE TO THE CONTRACTOR FOR PROPOSED UTILITY WORK SHOWN ON THIS SHEET.

SEPI Engineering & Construction, Inc.
1 Glenwood Avenue
Raleigh, NC 27603
Tel:919.789.9977
Fax:919.789.9591
License: C-2197

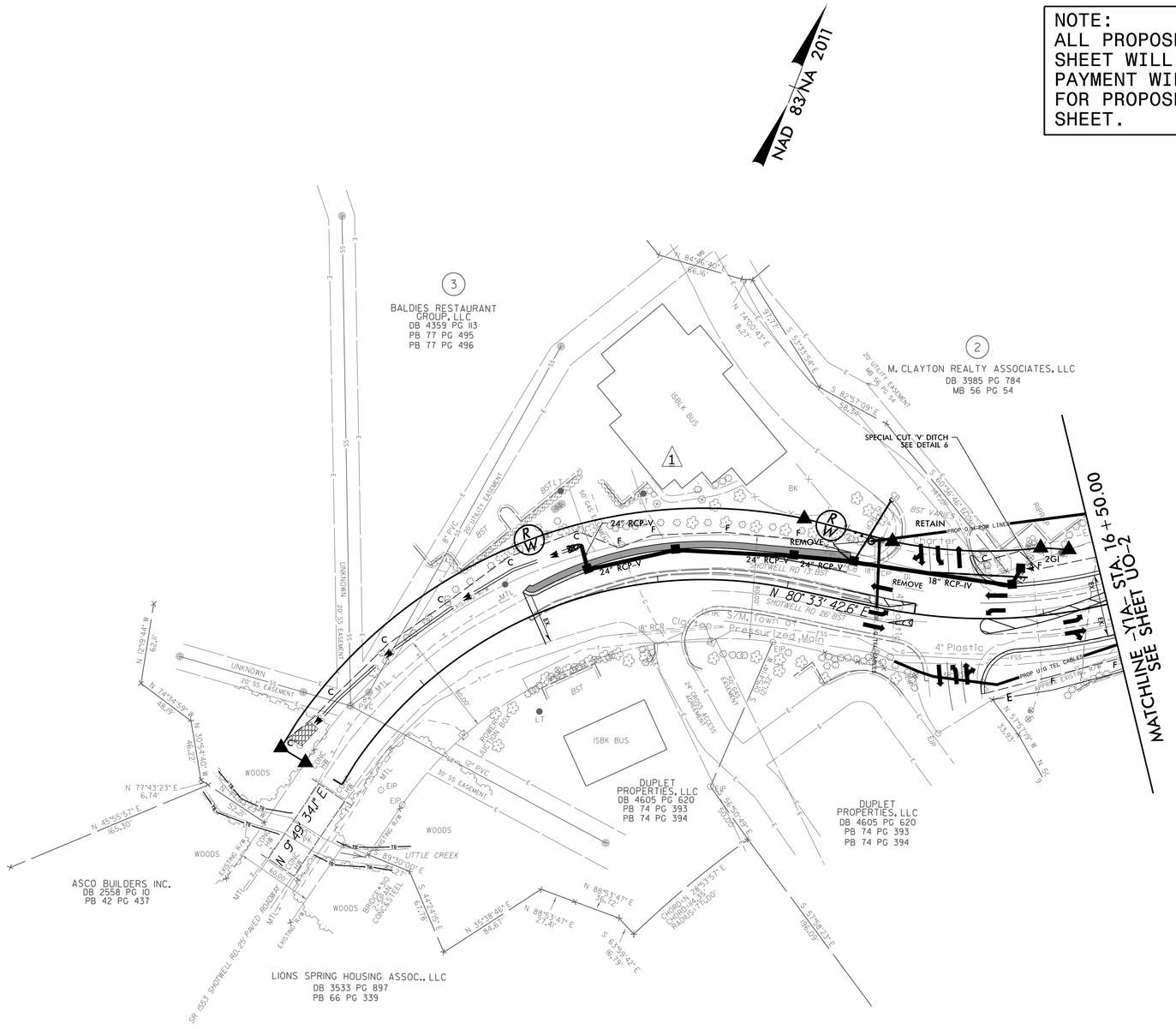

8/17/99

10/8/2021
..\UBO\W-5704B_Ut_12_UO_4_psh.dgn
USER:HBrown

PROJECT REFERENCE NO.	SHEET NO.
80074	UO-5

UTILITIES BY OTHERS

NOTE:
ALL PROPOSED UTILITY WORK SHOWN ON THIS SHEET WILL BE DONE BY OTHERS. NO PAYMENT WILL BE MADE TO THE CONTRACTOR FOR PROPOSED UTILITY WORK SHOWN ON THIS SHEET.

SEPI
Engineering & Construction, Inc.
1 Glenwood Avenue
Raleigh, NC 27603
Tel:919.789.9977
Fax:919.789.9591
License: C-2197

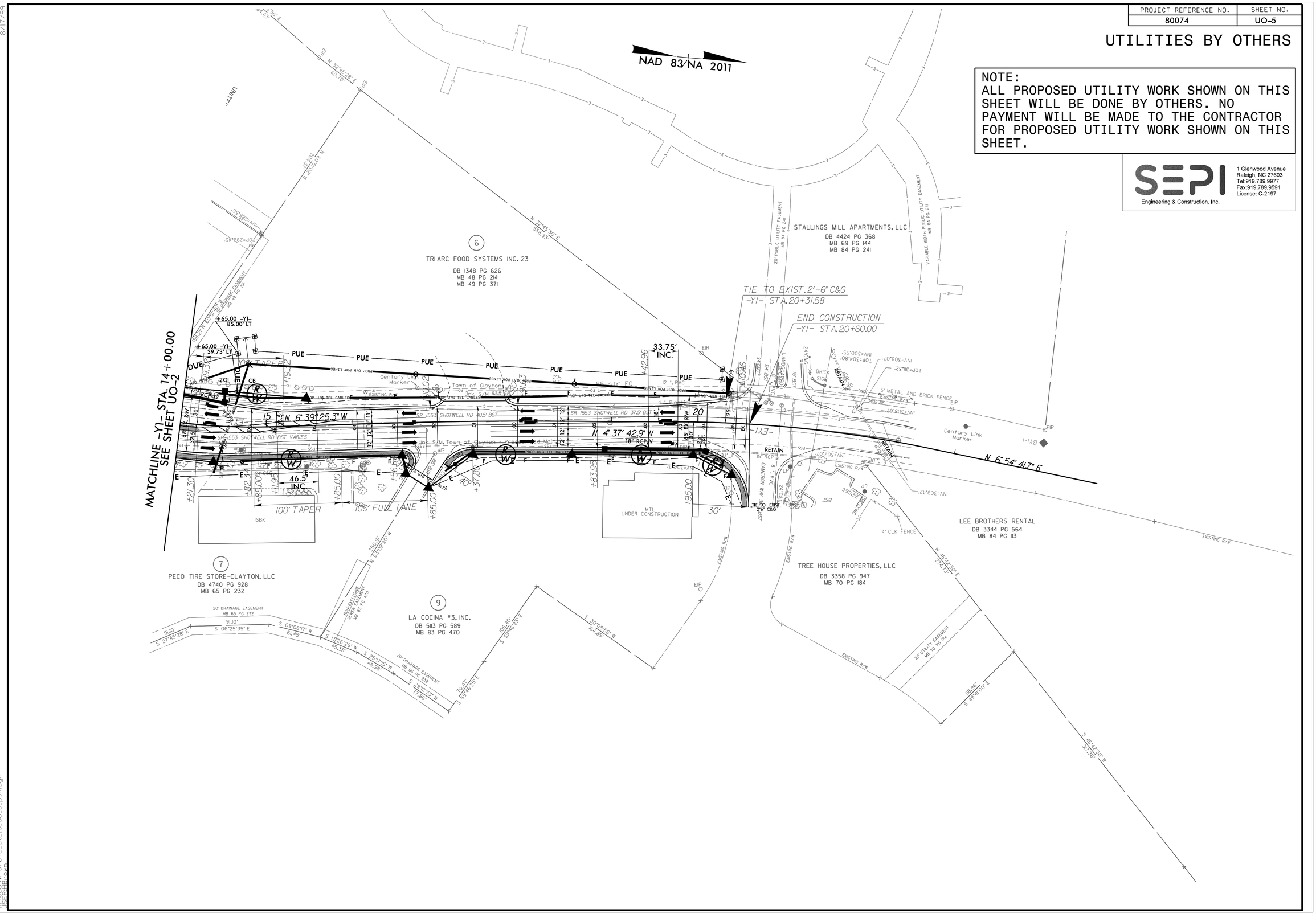

8/17/99

10/8/2021
...\UBO\W-5704B_Ut_13_UO_5_psh.dgn
USER:HBrown

PROJECT REFERENCE NO.	SHEET NO.
80074	X-1A

STATE OF NORTH CAROLINA
DIVISION OF HIGHWAYS

80074
CROSS SECTION INDEX OF SHEETS

ALIGNMENT AND STATIONING	SHEET NUMBERS
CROSS SECTION SUMMARY	X-1B
-L- STA. 4+00.00 TO STA. 23+50.00	X-2 TO X-13
-Y1A- STA. 10+10.00 TO STA. 18+50.00	X-14 TO X-18
-Y1- STA. 10+50.00 TO STA. 21+00.00	X-19 TO X-23

8/17/99

10/8/2021
...\XSC\W-5704A&B_Rdy_xpl_X-1B.dgn
jjSFRHBrown

PROJ. REFERENCE NO.	SHEET NO.
80074	X-1B

STATE OF NORTH CAROLINA
DIVISION OF HIGHWAYS

CROSS-SECTION SUMMARY

Approximate quantities only. Unclassified excavation, fine grading, and clearing and grubbing will be paid for at the lump sum price for "Grading".

NOTE: EMBANKMENT COLUMN DOES NOT INCLUDE BACKFILL FOR UNDERCUT

Station L	Uncl. Exc. (cu. yd.)	Embt (cu. yd.)
4+00.000	0	0
4+50.000	9	0
5+00.000	18	0
5+50.000	19	0
6+00.000	24	0
6+50.000	24	12
7+00.000	31	19
7+50.000	49	7
8+00.000	48	0
8+50.000	53	0
9+00.000	67	0
9+50.000	111	0
10+00.000	129	0
10+50.000	50	0
11+00.000	36	0
11+50.000	53	3
12+00.000	35	6
12+50.000	40	6
13+00.000	47	6
13+50.000	53	6
14+00.000	49	21
14+50.000	81	19
15+00.000	81	2
15+50.000	68	1
16+00.000	77	10
16+50.000	44	25
17+00.000	20	33
17+50.000	6	29
18+00.000	0	10
18+50.000	0	0
19+00.000	5	5
19+50.000	10	6
20+00.000	18	1
20+50.000	28	0
21+00.000	25	3
21+50.000	14	13
22+00.000	14	11
22+50.000	9	1
23+00.000	0	0
23+50.000	0	0

Station Y1A	Uncl. Exc. (cu. yd.)	Embt (cu. yd.)
10+10.000	0	0
10+50.000	4	0
11+00.000	14	0
11+50.000	14	0
12+00.000	36	2
12+50.000	58	5
12+75.000	16	2
13+00.000	3	4
13+50.000	6	15

Station Y1A	Uncl. Exc. (cu. yd.)	Embt (cu. yd.)
14+00.000	6	22
14+50.000	4	14
15+00.000	0	0
15+50.000	0	0
16+00.000	7	40
16+50.000	17	78
17+00.000	20	68
17+50.000	36	49
18+00.000	52	61
18+50.000	56	44
19+00.000	30	3

Station Y1	Uncl. Exc. (cu. yd.)	Embt (cu. yd.)
10+50.000	0	0
11+00.000	31	4
11+50.000	56	14
12+00.000	42	18
12+50.000	31	21
13+00.000	27	15
13+50.000	19	3
14+00.000	16	18
14+50.000	21	30
15+00.000	20	23
15+50.000	18	16
16+00.000	10	19
16+50.000	6	29
17+00.000	3	25
17+50.000	0	19
18+00.000	2	31
18+50.000	7	40
19+00.000	11	34
19+50.000	10	41
20+00.000	7	41
20+50.000	31	15
21+00.000	27	1

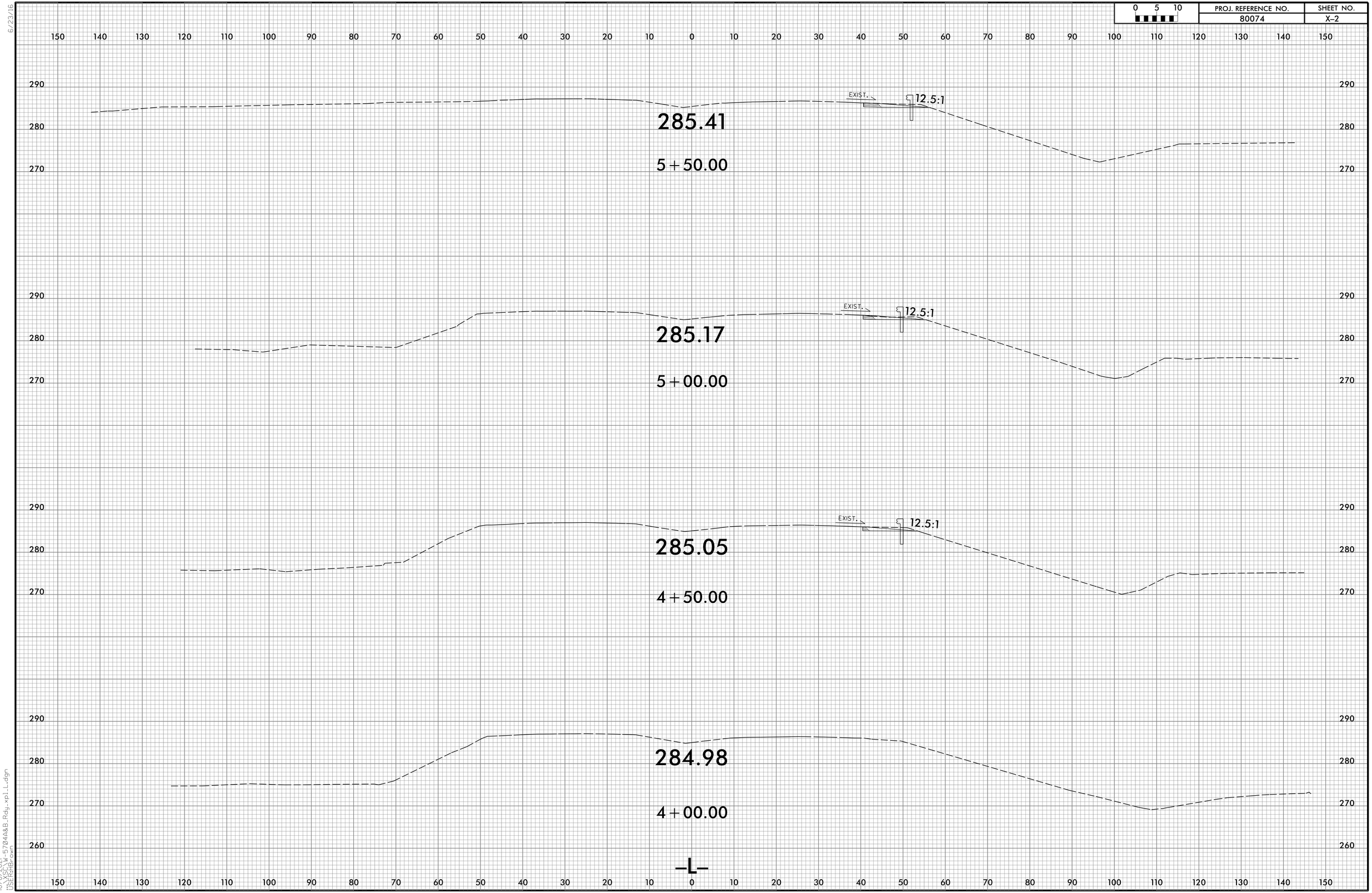

6/23/16

10/8/2021
\\XSC\W-5704A&B_Rdy_xpl_L.dgn
USER:HBrown

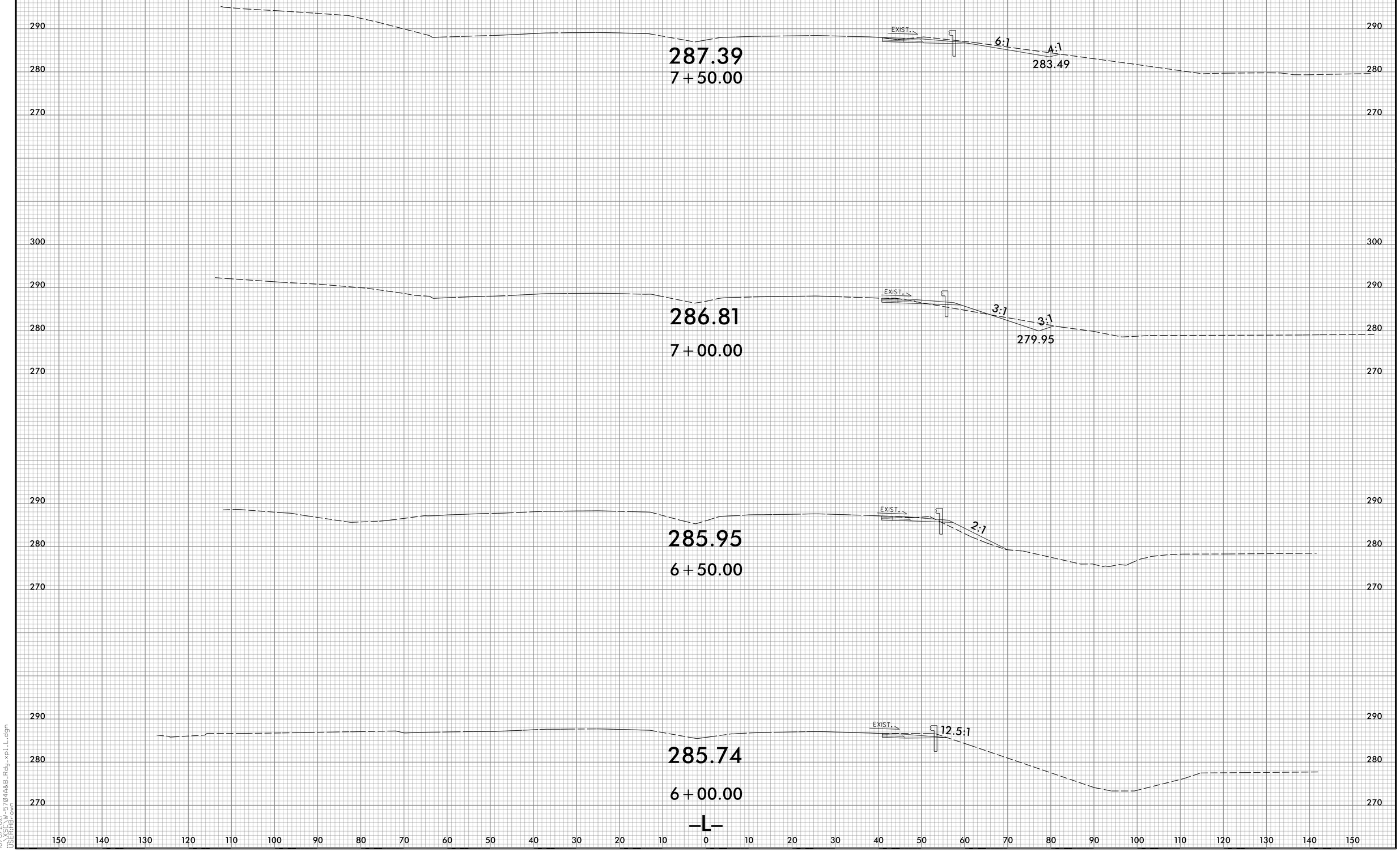

6/23/16

10/8/2021
\\XSC\W-5704A&B_Rdy_xpl_L.dgn
USER:HBrown

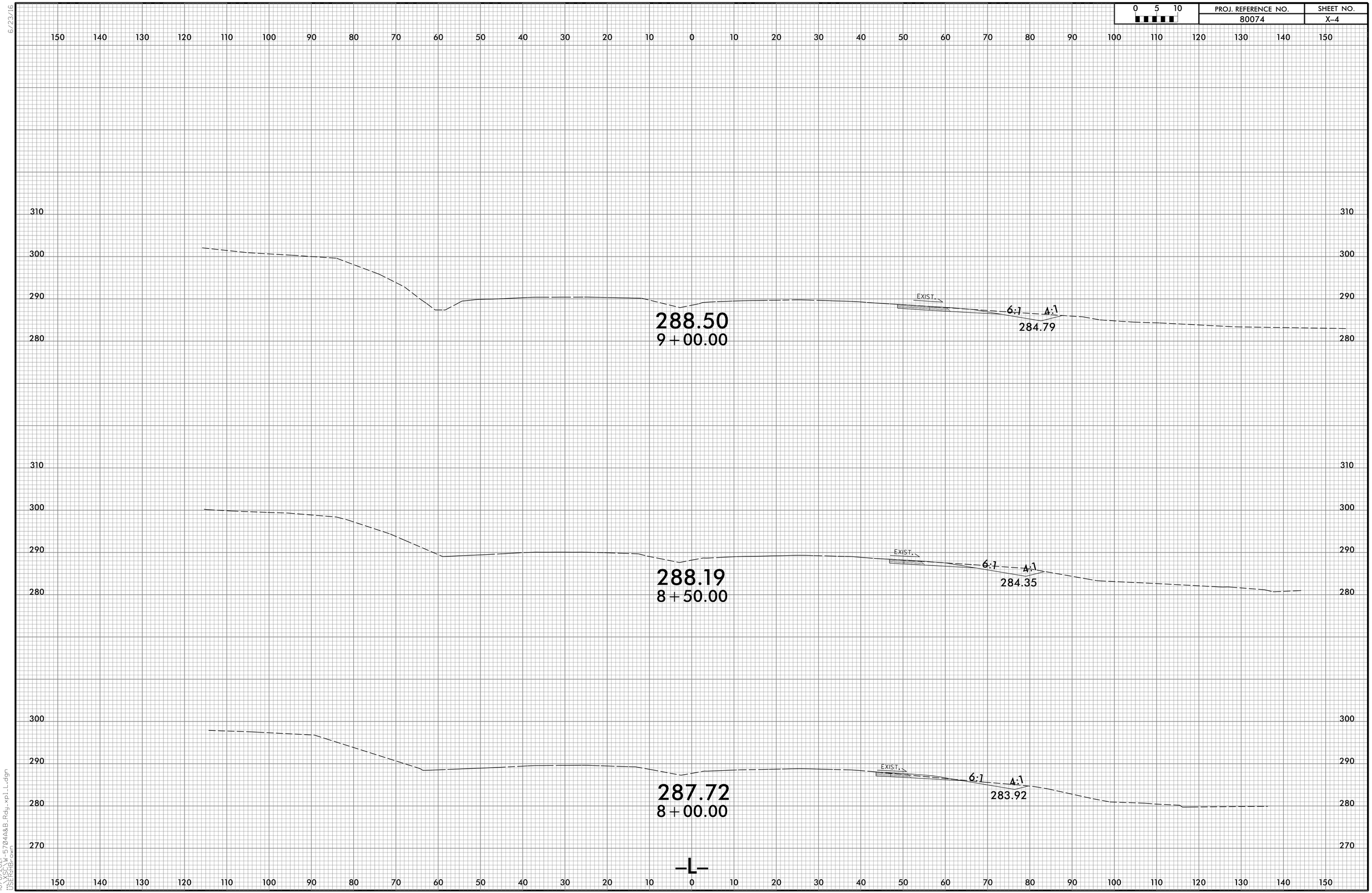

6/23/16

10/8/2021
\\XSC\W-5704A&B_Rdy_xpl_L.dgn
USER:HBrown

6/23/16

0 5 10	PROJ. REFERENCE NO.	SHEET NO.
	80074	X–5

150 140 130 120 110 100 90 80 70 60 50 40 30 20 10 0 10 20 30 40 50 60 70 80 90 100 110 120 130 140 150

300
290
280

DRIVEWAY

290.03
10+50.00

310
300
290
280

EXIST.

6:1 4:1

289.48
10+00.00

285.46

310
300
290
280

EXIST.

6:1 4:1

289.17
9+50.00

285.22

–L–

150 140 130 120 110 100 90 80 70 60 50 40 30 20 10 0 10 20 30 40 50 60 70 80 90 100 110 120 130 140 150

10/8/2021
...\XSCLW-5704A&B_Rdy_xpLL.dgn
USER:HBrown

6/23/16

0 5 10	PROJ. REFERENCE NO.	SHEET NO.
	80074	X-6

150 140 130 120 110 100 90 80 70 60 50 40 30 20 10 0 10 20 30 40 50 60 70 80 90 100 110 120 130 140 150

300
290
280

290.48
12+50.00

EXIST.
6:1
4:1
286.82

300
290
280

290.59
12+00.00

EXIST.
6:1
4:1
287.06

300
290
280

290.59
11+50.00

EXIST.
6:1
6:1
287.30

300
290
280

290.38
11+00.00

EXIST.
6:1
6:1
286.58

–L–

150 140 130 120 110 100 90 80 70 60 50 40 30 20 10 0 10 20 30 40 50 60 70 80 90 100 110 120 130 140 150

10/8/2021
:\XSC\W-5704A&B_Rdy_xpl_L.dgn
USER:HBP

PROJ. REFERENCE NO.	SHEET NO.
80074	X-7

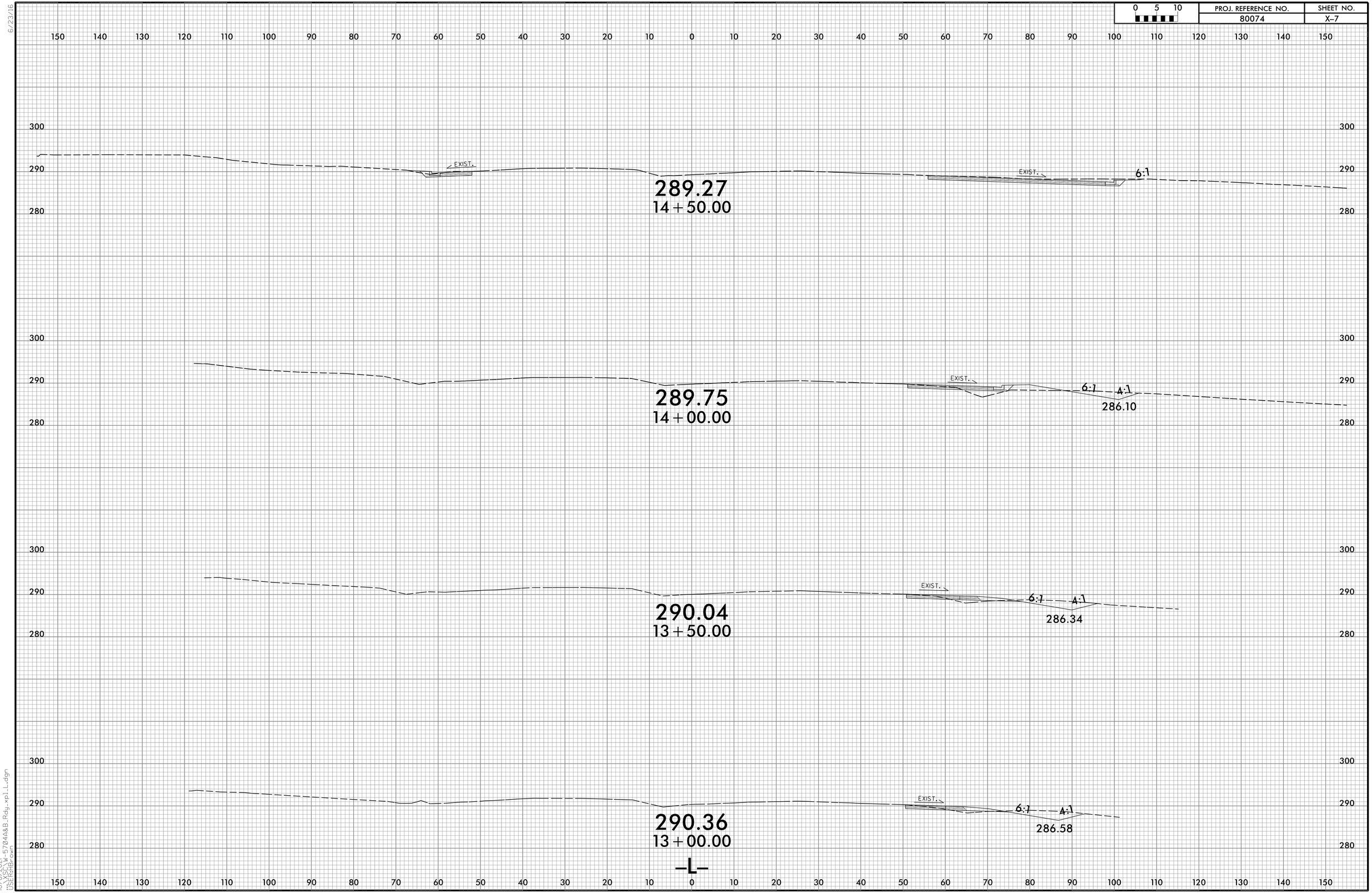

6/23/16
10/8/2021
\\XSC\W-5704A&B_Rdy_xpl_L.dgn
USER:HBrown

6/23/16

0 5 10	PROJ. REFERENCE NO.	SHEET NO.
	80074	X–8

150 140 130 120 110 100 90 80 70 60 50 40 30 20 10 0 10 20 30 40 50 60 70 80 90 100 110 120 130 140 150

300
290
280
270

SEE –Y1–
CROSS SECTIONS

288.64

15+50.00

EXIST.

300
290
280

2:1

EXIST.

289.26
15+00.00
–L–

SEE –Y1A–
CROSS SECTIONS

300
290
280

150 140 130 120 110 100 90 80 70 60 50 40 30 20 10 0 10 20 30 40 50 60 70 80 90 100 110 120 130 140 150

10/8/2021
:\XSC\W-5704A&B_Rdy_xpl_L.dgn
USER:HBP

0 5 10	PROJ. REFERENCE NO.	SHEET NO.
	80074	X–9

150 140 130 120 110 100 90 80 70 60 50 40 30 20 10 0 10 20 30 40 50 60 70 80 90 100 110 120 130 140 150

300
290
280
270

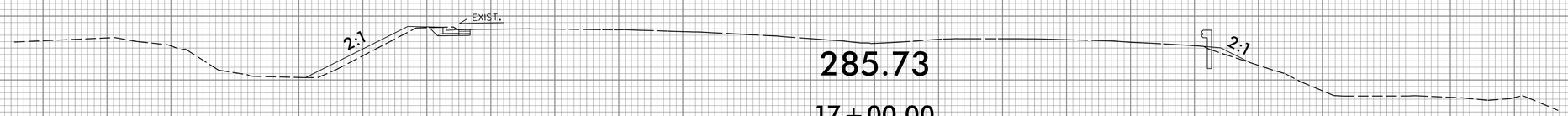

285.73

17+00.00

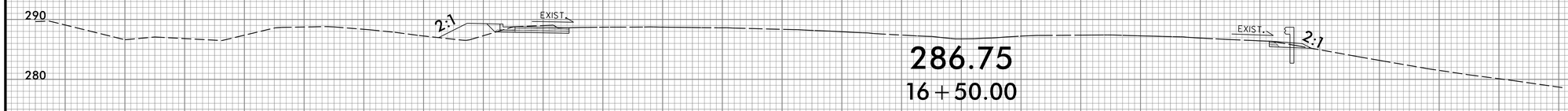

286.75

16+50.00

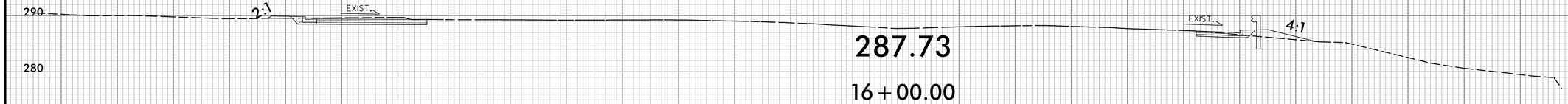

287.73

16+00.00

–L–

6/23/16

0 5 10	PROJ. REFERENCE NO.	SHEET NO.
	80074	X–10

150 140 130 120 110 100 90 80 70 60 50 40 30 20 10 0 10 20 30 40 50 60 70 80 90 100 110 120 130 140 150

290
280
270

EXIST.
4:1

282.92
19+00.00

290
280
270

DRIVEWAY

283.57
18+50.00

290
280
270

DRIVEWAY

284.25
18+00.00

290
280
270

2:1

285.05
17+50.00

290
280
270
260

–L–

150 140 130 120 110 100 90 80 70 60 50 40 30 20 10 0 10 20 30 40 50 60 70 80 90 100 110 120 130 140 150

10/8/2021
\\SCW-5704A&B_Rdy_xpl_L.dgn
USERNAME.dgn

6/23/16

0 5 10	PROJ. REFERENCE NO.	SHEET NO.
	80074	X–11

150 140 130 120 110 100 90 80 70 60 50 40 30 20 10 0 10 20 30 40 50 60 70 80 90 100 110 120 130 140 150

290
280
270

EXIST.
4:1

278.72
21+00.00

290
280
270

EXIST.

280.12
20+50.00

290
280
270

EXIST.

281.19
20+00.00

290
280
270

EXIST.
4:1

281.83
19+50.00

–L–

150 140 130 120 110 100 90 80 70 60 50 40 30 20 10 0 10 20 30 40 50 60 70 80 90 100 110 120 130 140 150

10/8/2021
:\XSC\W-5704A&B_Rdy_xpl_L.dgn
USER:HBP

6/23/16

0 5 10	PROJ. REFERENCE NO.	SHEET NO.
	80074	X–12

150 140 130 120 110 100 90 80 70 60 50 40 30 20 10 0 10 20 30 40 50 60 70 80 90 100 110 120 130 140 150

290
280
270
260

DRIVEWAY

276.83
22+50.00

290
280
270

EXIST.
4:1

277.61
22+00.00

290
280
270

EXIST.
4:1

277.75
21+50.00

–L–

150 140 130 120 110 100 90 80 70 60 50 40 30 20 10 0 10 20 30 40 50 60 70 80 90 100 110 120 130 140 150

10/8/2021
::\XSC\W-5704A&B_Rdy_xplL.dgn
USERNAME

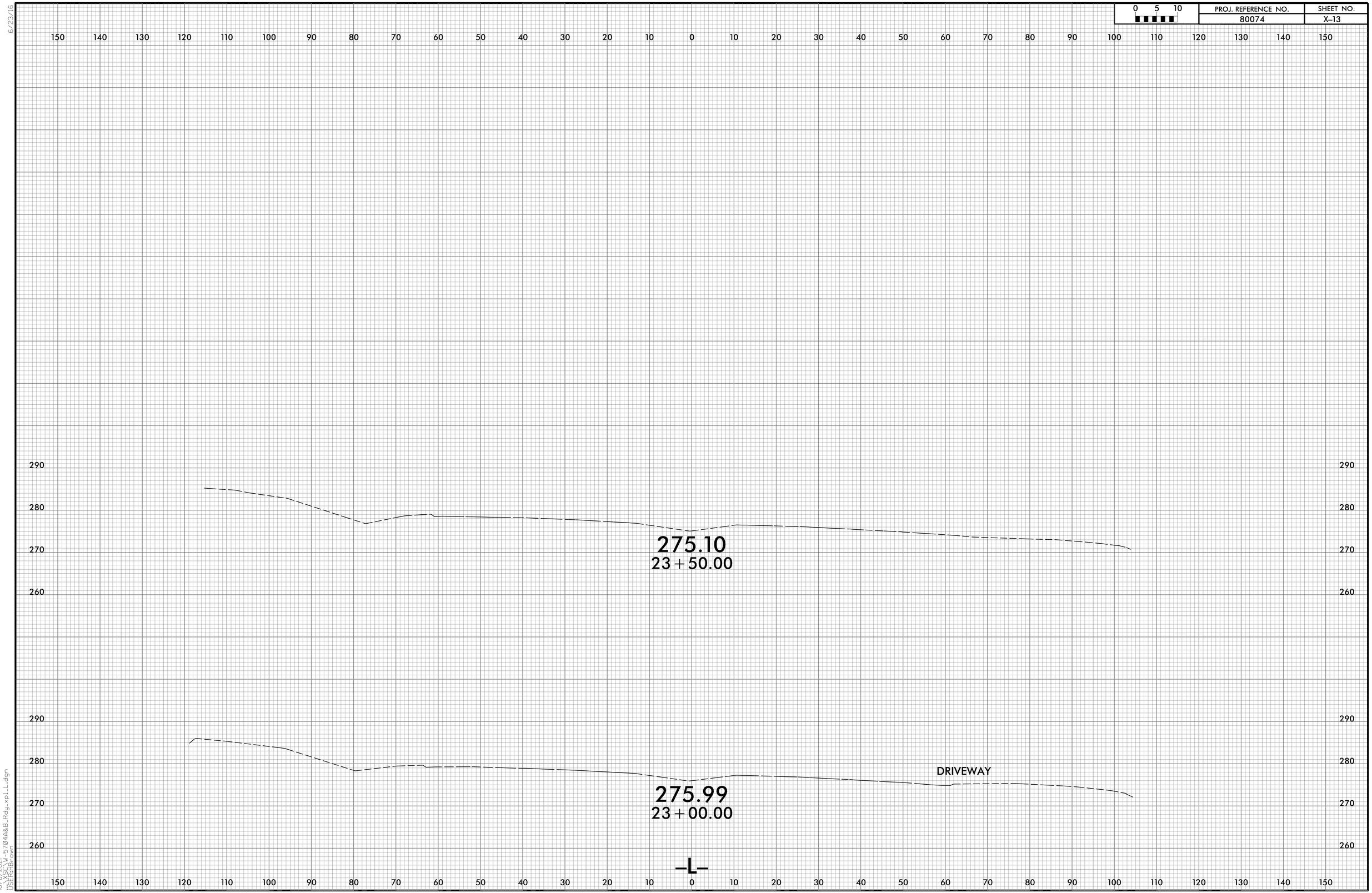

6/23/16

10/8/2021
\\XSC\W-5704A&B_Rdy_xpl_L.dgn
USER:HBrown

0 2.5 5	PROJ. REFERENCE NO.	SHEET NO.
	80074	X–14

75 70 65 60 55 50 45 40 35 30 25 20 15 10 5 0 5 10 15 20 25 30 35 40 45 50 55 60 65 70 75

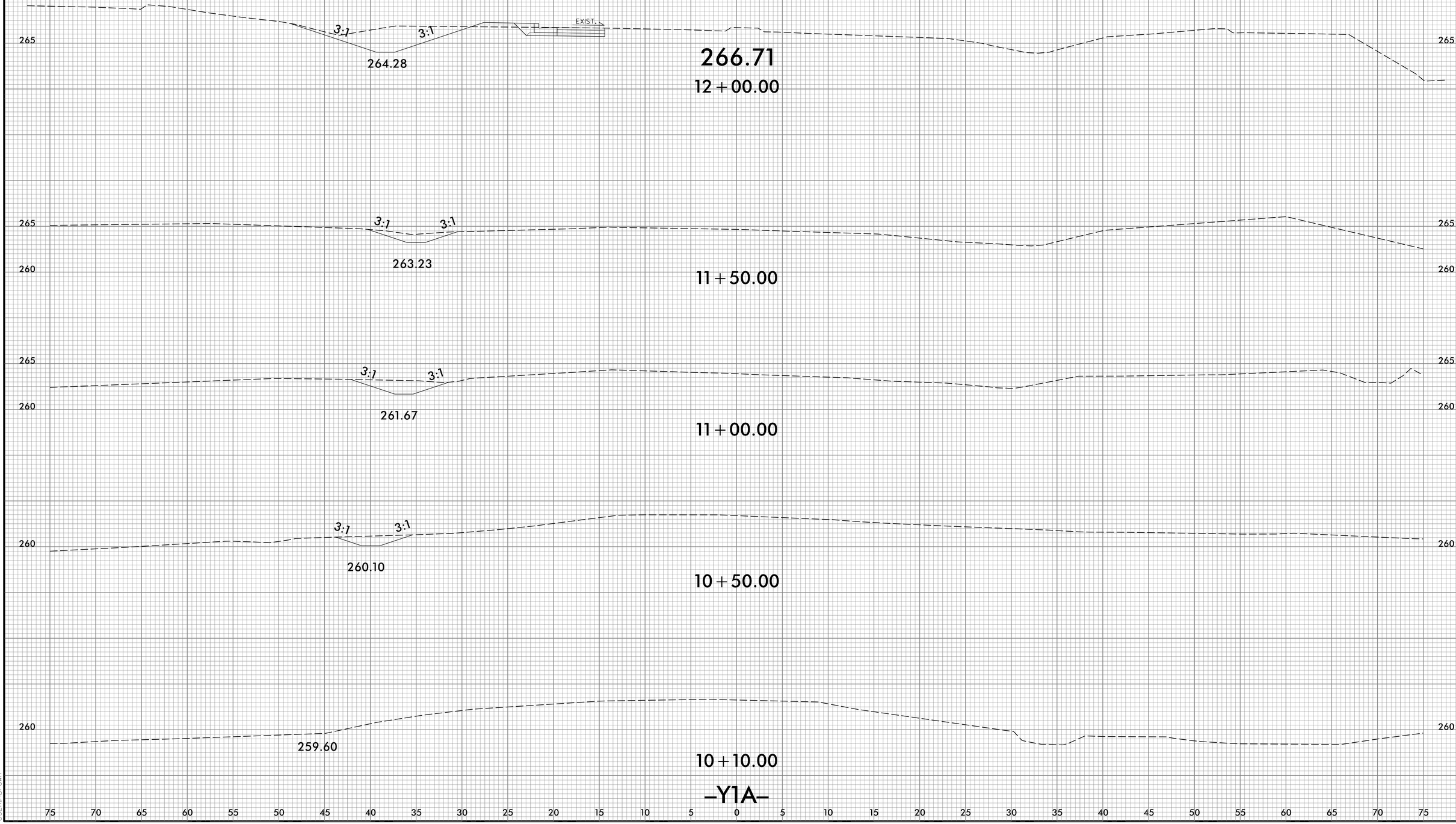

–Y1A–

6/23/16

0 2.5 5	PROJ. REFERENCE NO.	SHEET NO.
	80074	X–15

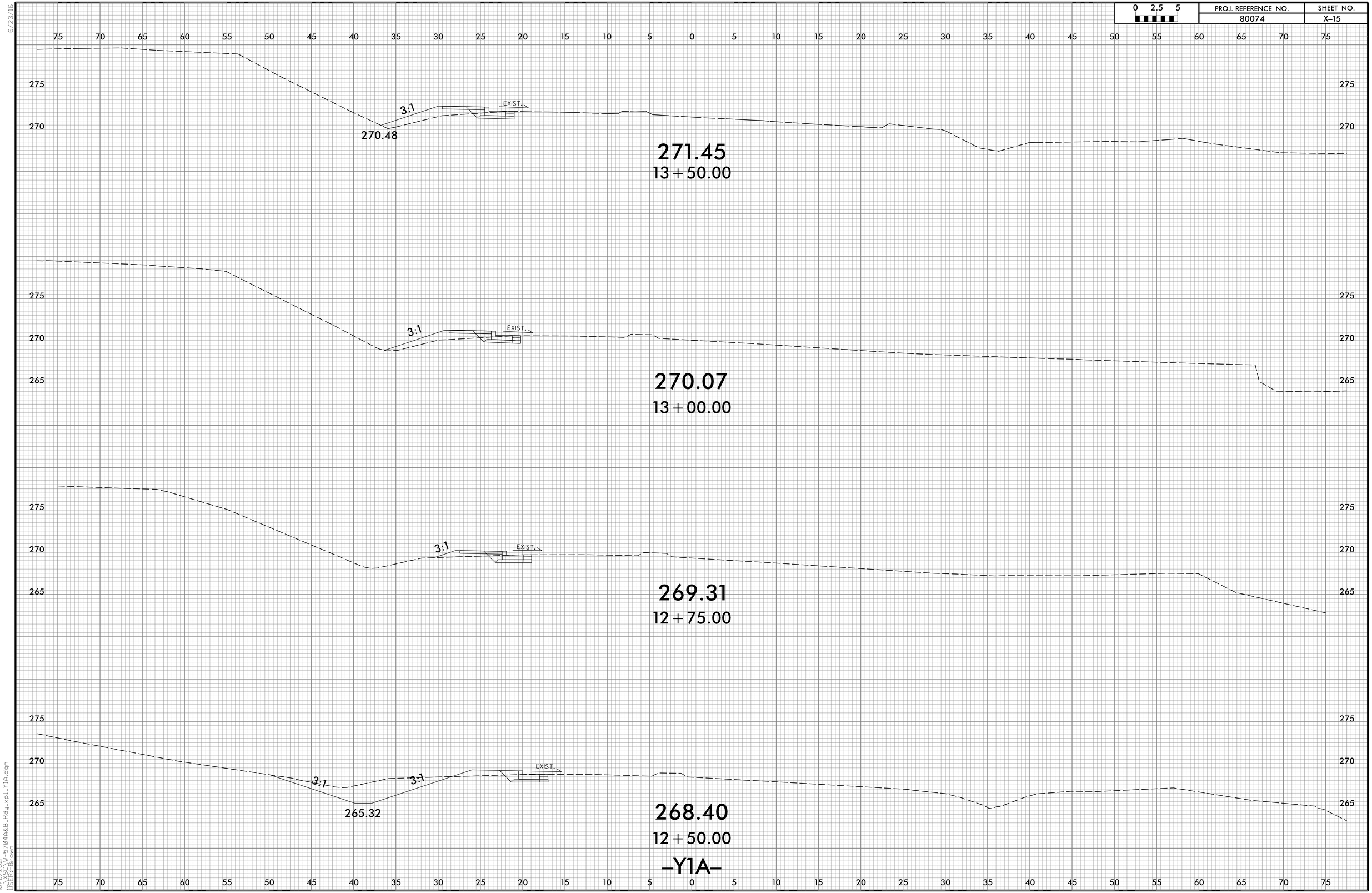

10/8/2021
:\SCW_5704A&B_Rdy_xpl_Y1A.dgn
USERNAME.own

6/23/16

0 2.5 5	PROJ. REFERENCE NO.	SHEET NO.
	80074	X–16

75 70 65 60 55 50 45 40 35 30 25 20 15 10 5 0 5 10 15 20 25 30 35 40 45 50 55 60 65 70 75

280
275

DRIVEWAY

DRIVEWAY

276.63
15+50.00

280
275
270

DRIVEWAY

274.77
15+00.00

280
275
270

273.56
14+50.00

275
270

3:1

EXIST.

271.82

272.64
14+00.00

–Y1A–

10/8/2021
\\SCW-5704A&B_Rdy_xpl_Y1A.dgn
USER:HBrown

0 2.5 5	PROJ. REFERENCE NO.	SHEET NO.
	80074	X–17

75 70 65 60 55 50 45 40 35 30 25 20 15 10 5 0 5 10 15 20 25 30 35 40 45 50 55 60 65 70 75

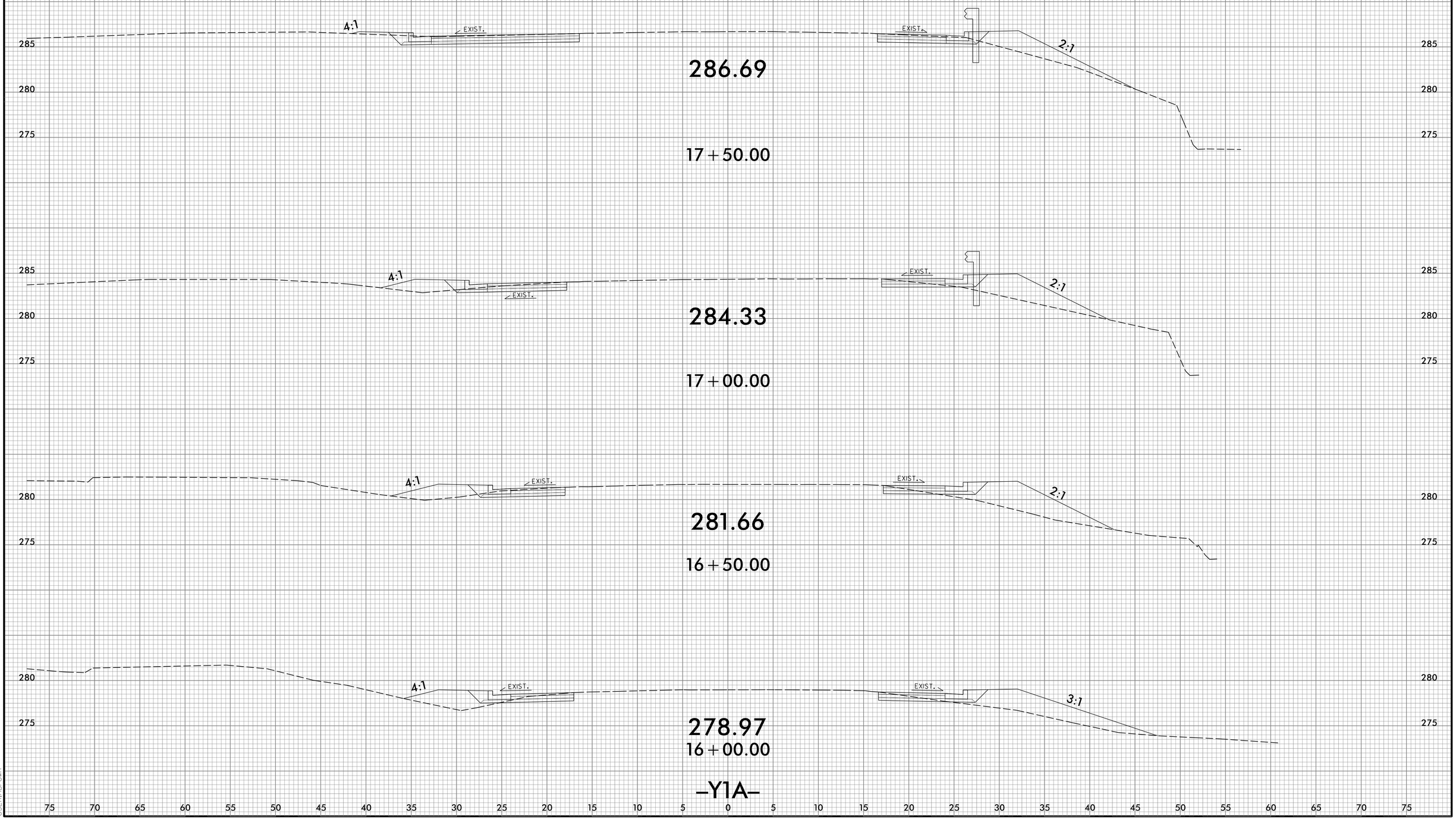

–Y1A–

75 70 65 60 55 50 45 40 35 30 25 20 15 10 5 0 5 10 15 20 25 30 35 40 45 50 55 60 65 70 75

6/23/16

0 2.5 5	PROJ. REFERENCE NO.	SHEET NO.
	80074	X–18

75 70 65 60 55 50 45 40 35 30 25 20 15 10 5 0 5 10 15 20 25 30 35 40 45 50 55 60 65 70 75

SEE –L–
CROSS SECTIONS

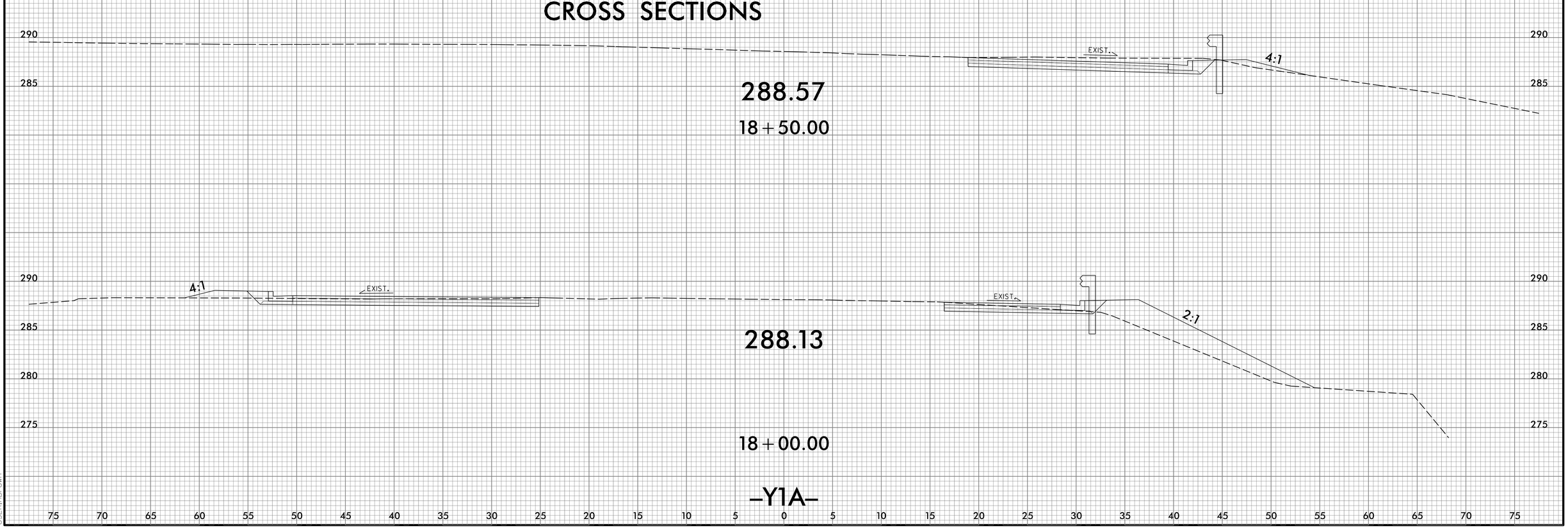

–Y1A–

10/8/2021
\\XSCW-5704A&B_Rdy_xpl_Y1A.dgn
USERHBrown

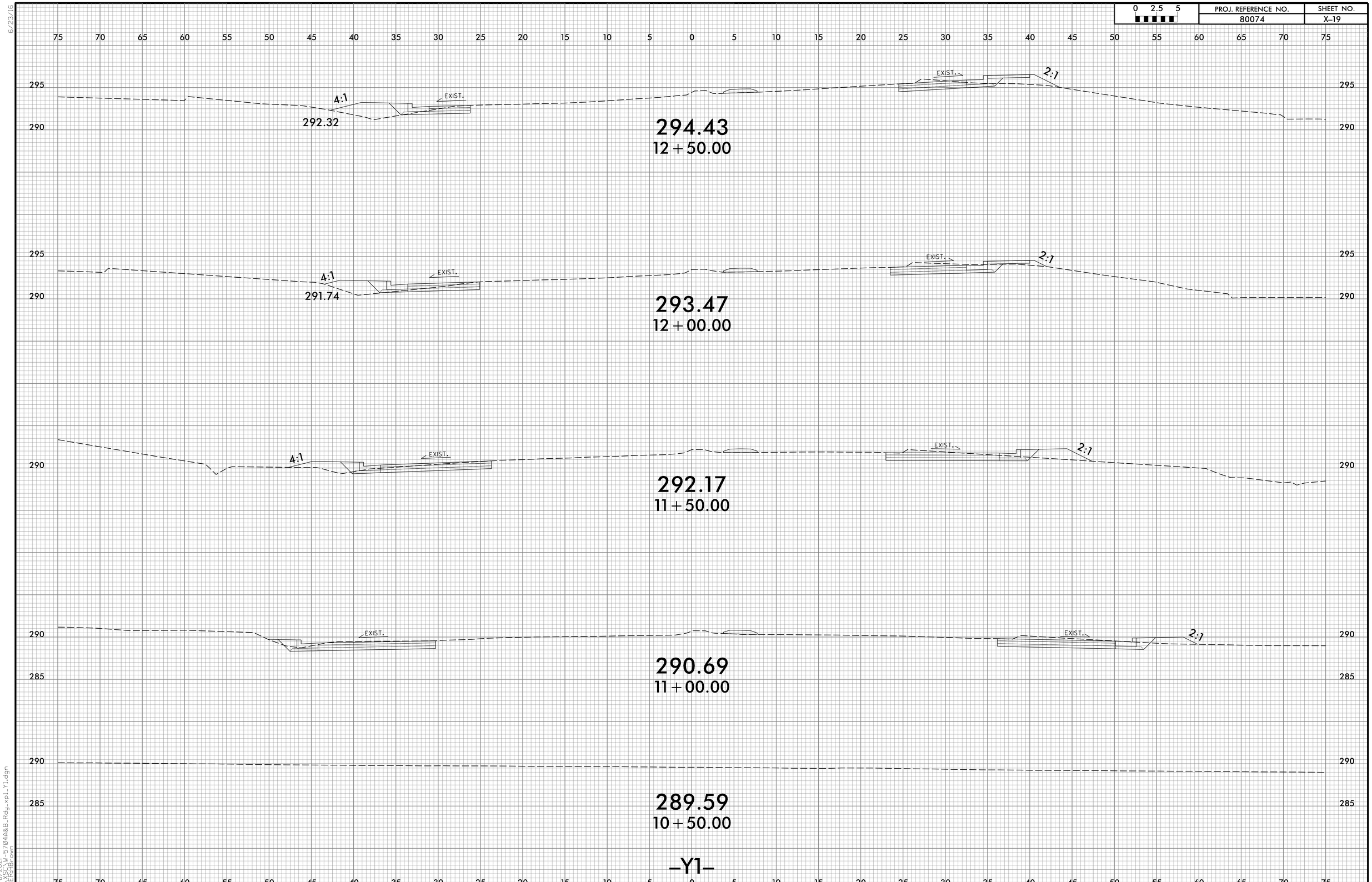

6/23/16

10/8/2021
...\XSC\W-5704A&B_Rdy_xpl_Y1.dgn
USER:HBrown

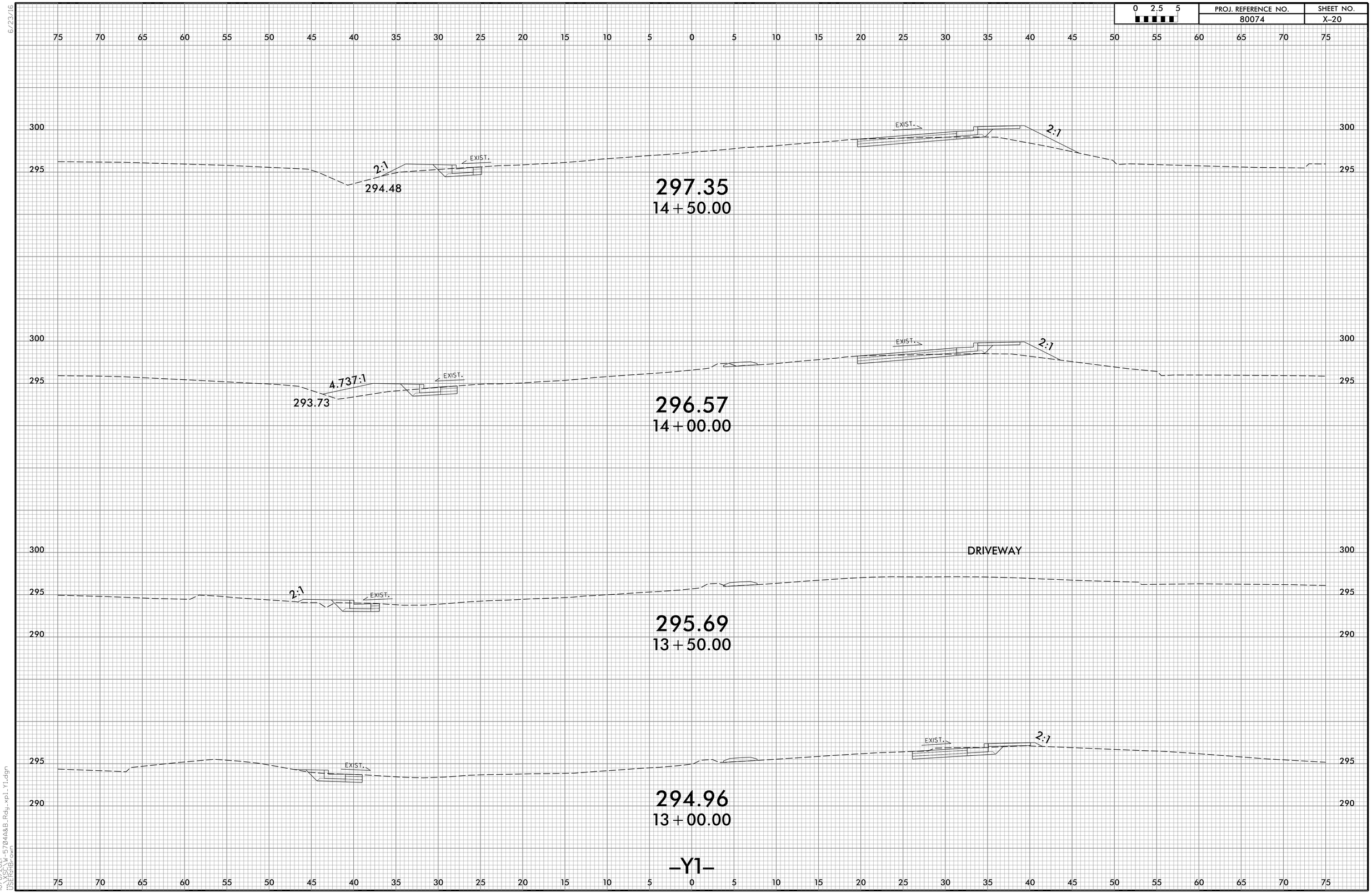

6/23/16

10/8/2021
...\XSC\W-5704A&B_Rdy_xpl_Y1.dgn
USER:HBrown

0 2.5 5	PROJ. REFERENCE NO.	SHEET NO.
	80074	X–21

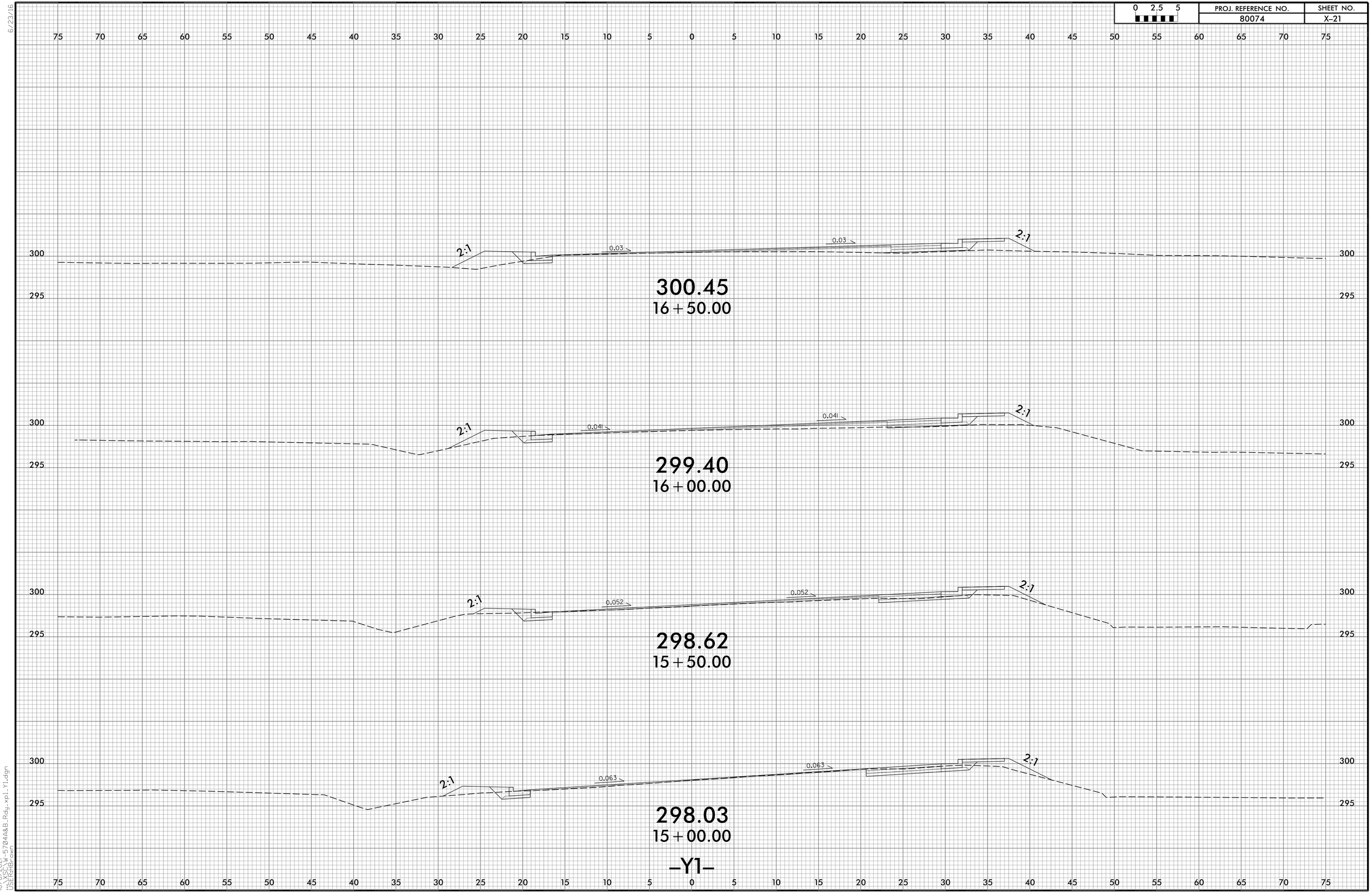

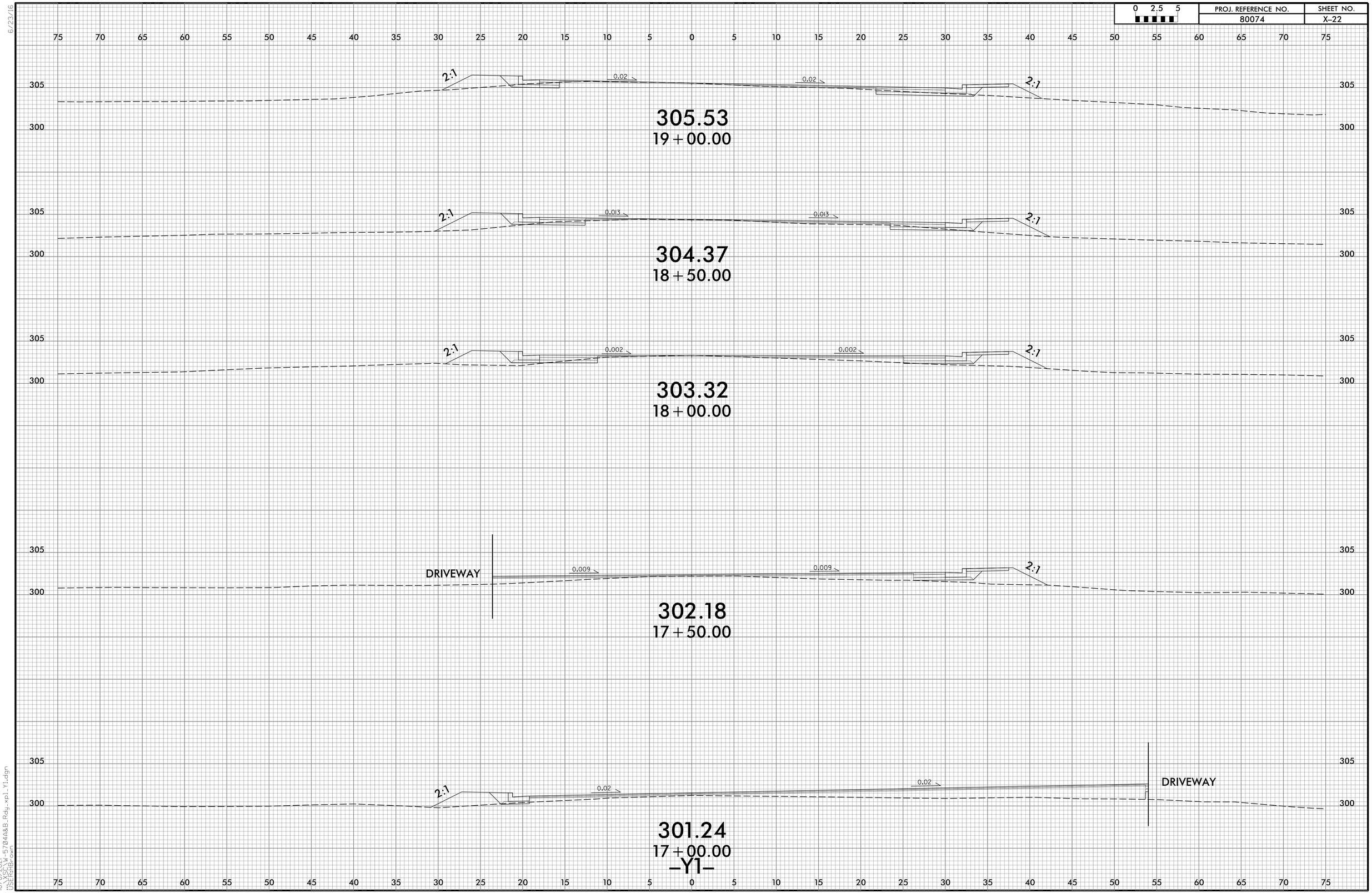

0 2.5 5
PROJ. REFERENCE NO.
80074
SHEET NO.
X-22
305.53
19+00.00
304.37
18+50.00
303.32
18+00.00
302.18
17+50.00
301.24
17+00.00
-Y1-
DRIVEWAY
DRIVEWAY
2:1
0.02
0.013
0.002
0.009

6/23/16

0 2.5 5	PROJ. REFERENCE NO.	SHEET NO.
	80074	X–23

75 70 65 60 55 50 45 40 35 30 25 20 15 10 5 0 5 10 15 20 25 30 35 40 45 50 55 60 65 70 75

310
305

310.82
21+00.00

310
305

0.052
2:1

309.53
20+50.00

310
305

2:1
0.037
0.037
2:1

308.10
20+00.00

305

2:1
0.022
0.022
2:1

306.78
19+50.00
–Y1–

75 70 65 60 55 50 45 40 35 30 25 20 15 10 5 0 5 10 15 20 25 30 35 40 45 50 55 60 65 70 75

10/8/2021
...\XSEC\W-5704A&B_Rdy_xpl_Y1.dgn
USER:HBrown