NOTES :

FOR BERM WIDTH DIMENSIONS, SEE GENERAL DRAWING.

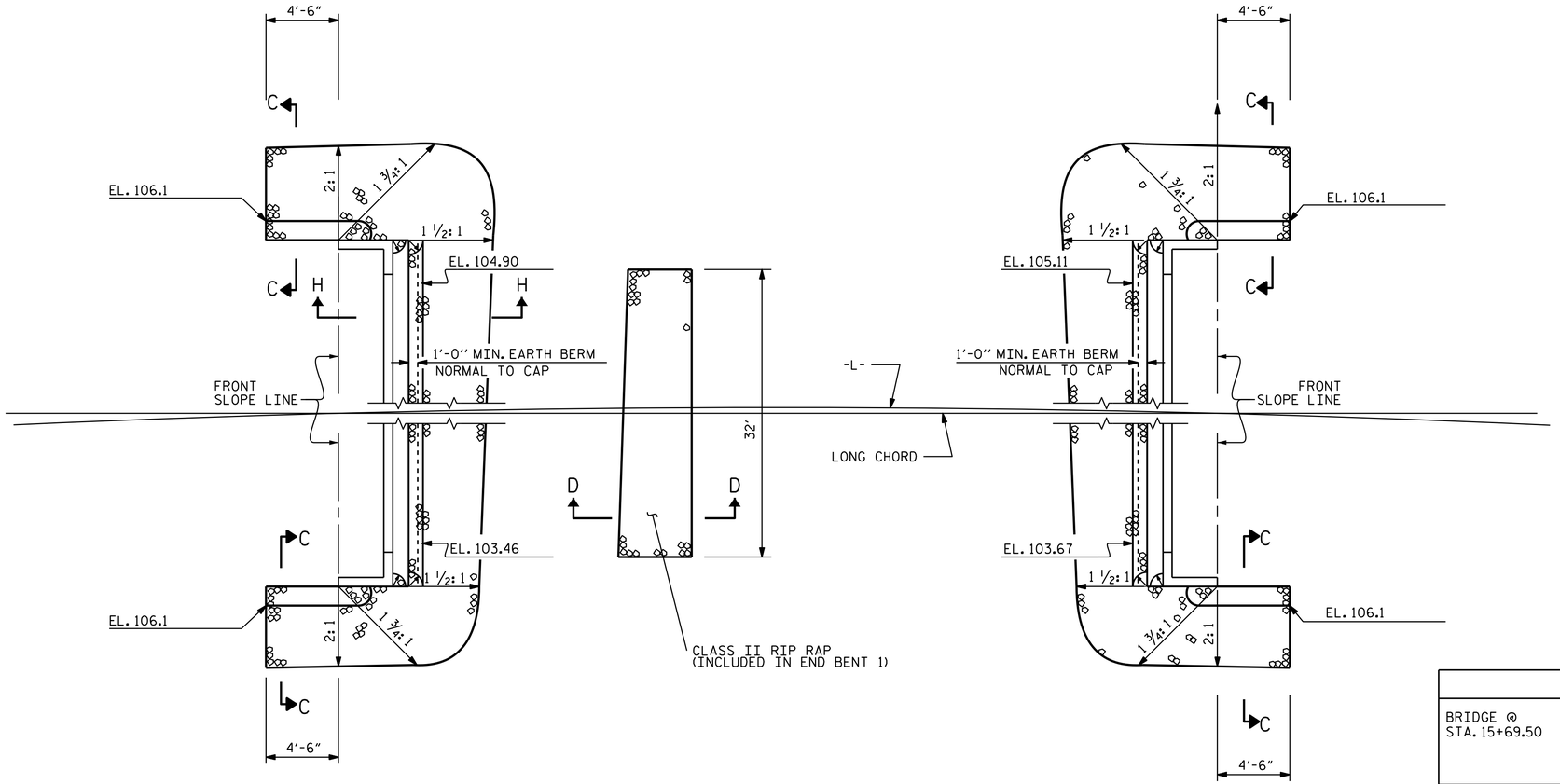

END BENT 1

PLAN

END BENT 2

ESTIMATED QUANTITIES		
BRIDGE @ STA. 15+69.50	RIP RAP CLASS II (2'-0" THICK)	GEOTEXTILE FOR DRAINAGE
	TONS	SQUARE YARDS
END BENT 1	54	59
END BENT 2	24	27

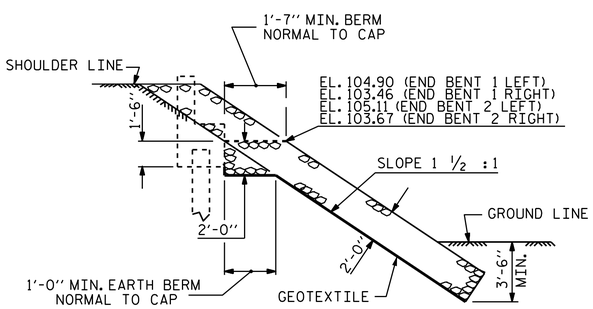

SECTION H-H

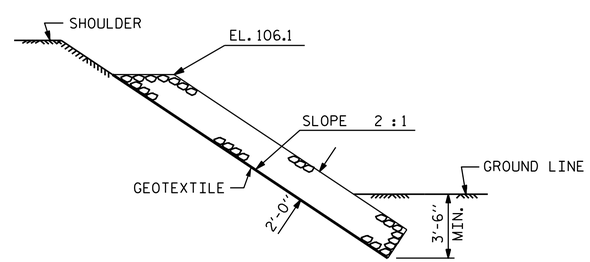

SECTION C-C

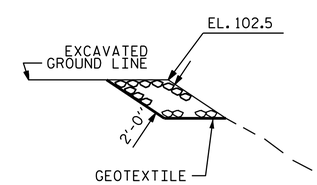

SECTION D-D

PROJECT NO. 17BP.4.R.65

WAYNE COUNTY

STATION: 15+69.50 -L-

NORTH CAROLINA PROFESSIONAL SEAL 22005 ENGINEER A. KEITH PASCHAL

DocuSigned by: A. Keith Paschal F8B8AD6DB2FC48F...

8/19/2015

STATE OF NORTH CAROLINA
DEPARTMENT OF TRANSPORTATION
RALEIGH

STANDARD

RIP RAP DETAILS

REVISIONS								SHEET NO.
NO.	BY:	DATE:	NO.	BY:	DATE:			S-17
1			3					TOTAL SHEETS
2			4					18

ASSEMBLED BY : C.C.WILLIAMS		DATE :	7/2015
CHECKED BY : A.K.PASCHAL		DATE :	8/2015
DRAWN BY : REK 1/84	REV. 5/1/06R		TLA/GM
CHECKED BY : RDU 1/84	REV. 10/1/11		MAA/GM
	REV. 12/21/11		MAA/GM

19-AUG-2015 15:12
S:\DPG1\Division4\17BP4R65\CCWilliams\17BP4R65_SMU_CS.dgn
kpaschal

STD. NO. RR1 (Sht 2)