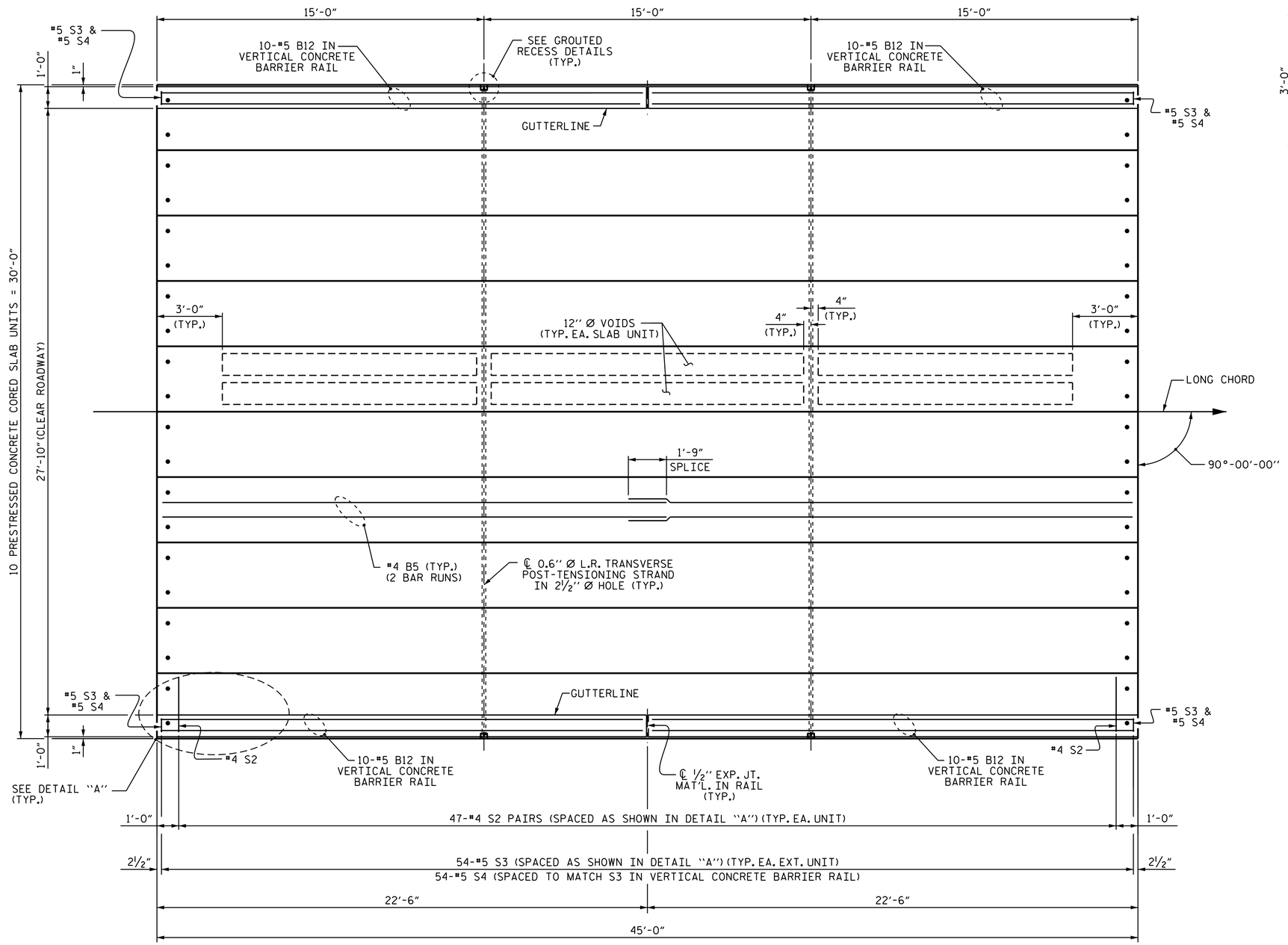

PLAN OF UNIT

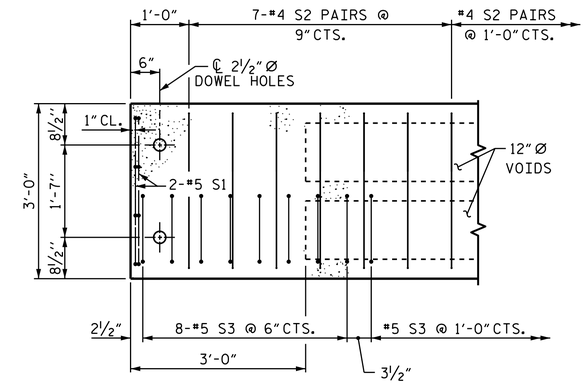

DETAIL "A"

(TYPICAL EACH END OF UNIT)
NOTE: EXTERIOR UNIT SHOWN - INTERIOR UNIT SIMILAR EXCEPT OMIT #5 S3 BARS.

PROJECT NO. 17BP.4.R.65
WAYNE COUNTY
STATION: 15+69.50 -L-

SHEET 3 OF 5

STATE OF NORTH CAROLINA
DEPARTMENT OF TRANSPORTATION
RALEIGH

PLAN OF 45' UNIT 27'-10" CLEAR ROADWAY 90° SKEW

NORTH CAROLINA PROFESSIONAL SEAL 22005 ENGINEER A. KEITH PASCHAL

DocuSigned by: A. Keith Paschal F8B6AD6DB2FC48F...
8/12/2015

REVISIONS							SHEET NO.
NO.	BY:	DATE:	NO.	BY:	DATE:		S-7
1			3				TOTAL SHEETS
2			4				18

ASSEMBLED BY : C.C.WILLIAMS		DATE : 7/2015	
CHECKED BY : A.K.PASCHAL		DATE : 8/2015	
DRAWN BY : DGE 3/09	REV. 12/5/11	MAA/AAC	
CHECKED BY : BCH 3/09	REV. 8/14	MAA/TMG	

12-AUG-2015 10:04
S:\DPGI\Division4\17BP4R65\CCWilliams\17BP4R65_SMU_CS.dgn
kpaschal

STD. NO. 21" PCS_30_90S_45L