NOTES

STIRRUPS IN CAP MAY BE SHIFTED AS NECESSARY TO CLEAR DOWELS.

★ INVERT ALTERNATE STIRRUPS.

GALVANIZE THE FULL LENGTH OF EACH INTERIOR BENT PILE IN ACCORDANCE WITH SECTION 1076 OF THE STANDARD SPECIFICATIONS.

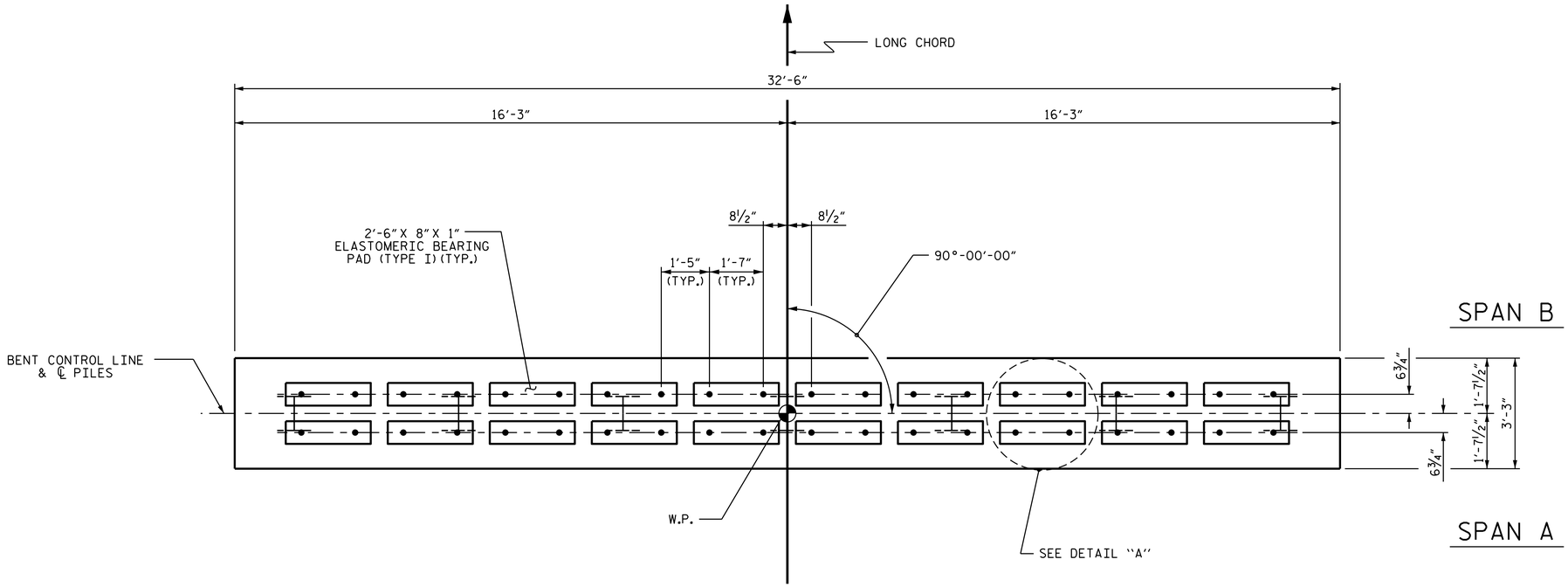

PLAN

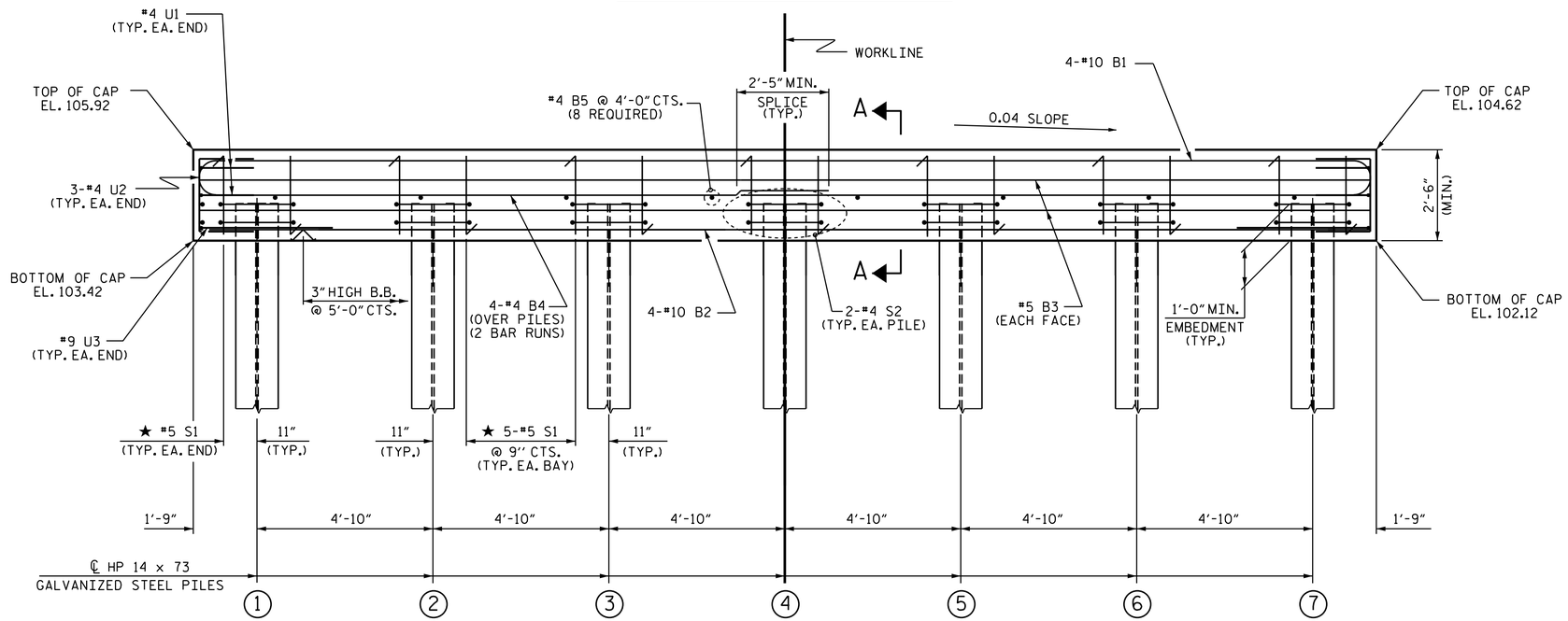

ELEVATION

FOR SECTION A-A, SEE SHEET 2 OF 2

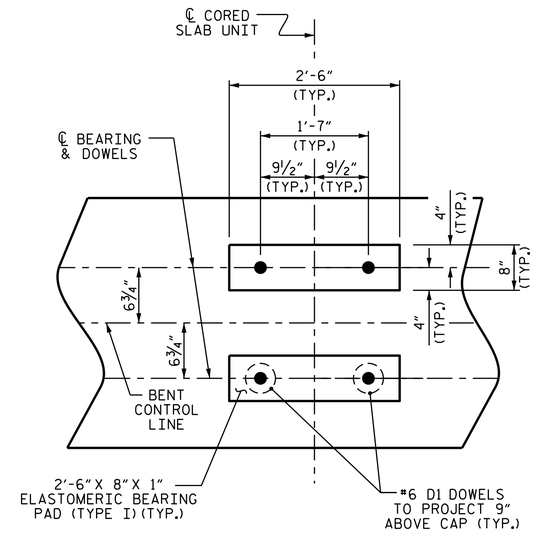

DETAIL "A"

(DIMENSIONS ARE TYPICAL EACH BEARING)

TOP OF PILE ELEVATIONS	
1	104.37
2	104.18
3	103.98
4	103.79
5	103.60
6	103.40
7	103.21

PROJECT NO. 17BP.4.R.65

WAYNE COUNTY

STATION: 15+69.50 -L-

SHEET 1 OF 2

NORTH CAROLINA PROFESSIONAL SEAL 22005 ENGINEER A. KEITH PASCHAL

DocuSigned by: A. Keith Paschal F8B6AD6DB2FC48F...

8/12/2015

STATE OF NORTH CAROLINA
DEPARTMENT OF TRANSPORTATION
RALEIGH

SUBSTRUCTURE

BENT No. 1

REVISIONS						SHEET NO.
NO.	BY:	DATE:	NO.	BY:	DATE:	S-15
1			3			TOTAL SHEETS
2			4			18

ASSEMBLED BY : C.C.WILLIAMS DATE : 8/2015	
CHECKED BY : A.K.PASCHAL DATE : 8/2015	
DRAWN BY : DGE 05/10	REV. 11/14 MAA/TMG
CHECKED BY : MKT 05/10	

12-AUG-2015 10:04
S:\DPGI\Division4\17BP4R65\CCWilliams\17BP4R65_SMU_CS.dgn
kpaschal

STD. NO. 14" HP_BT_30_90S_<60'