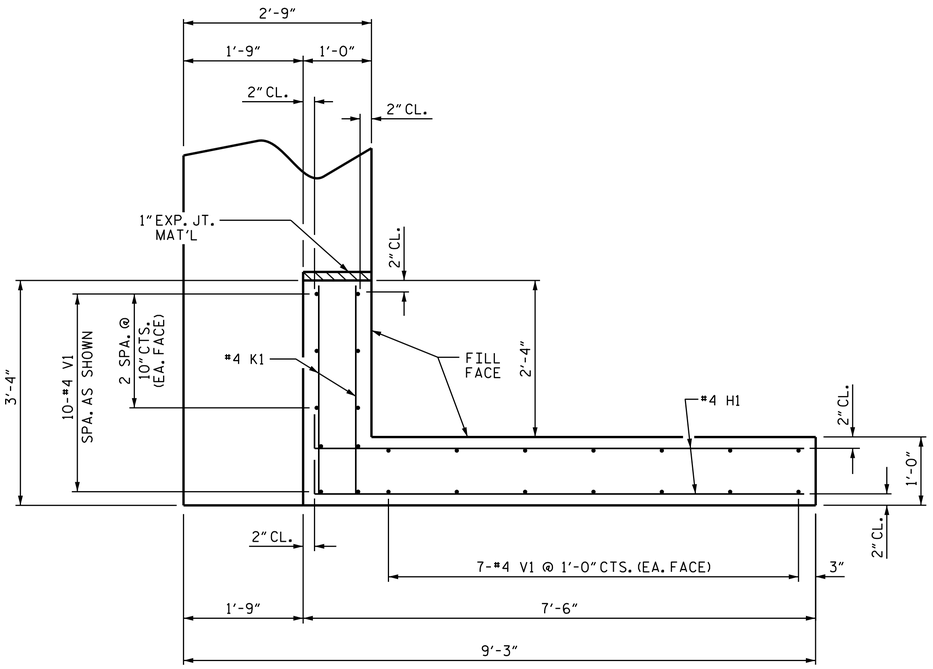

PLAN OF WING (W1)

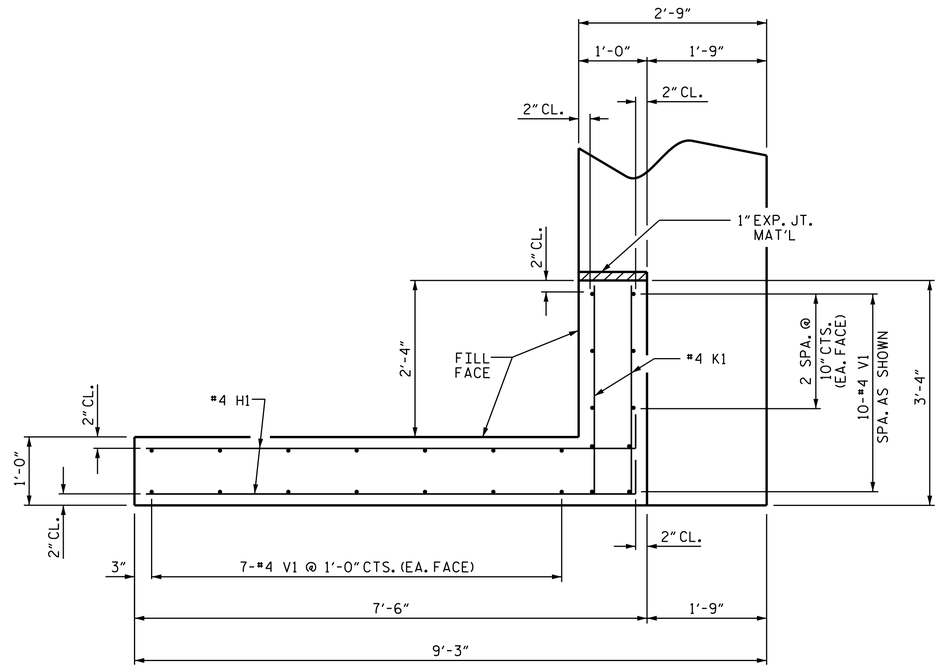

PLAN OF WING (W2)

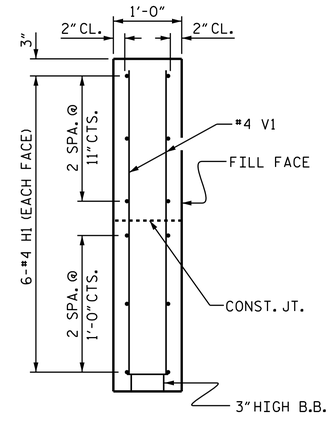

SECTION X-X

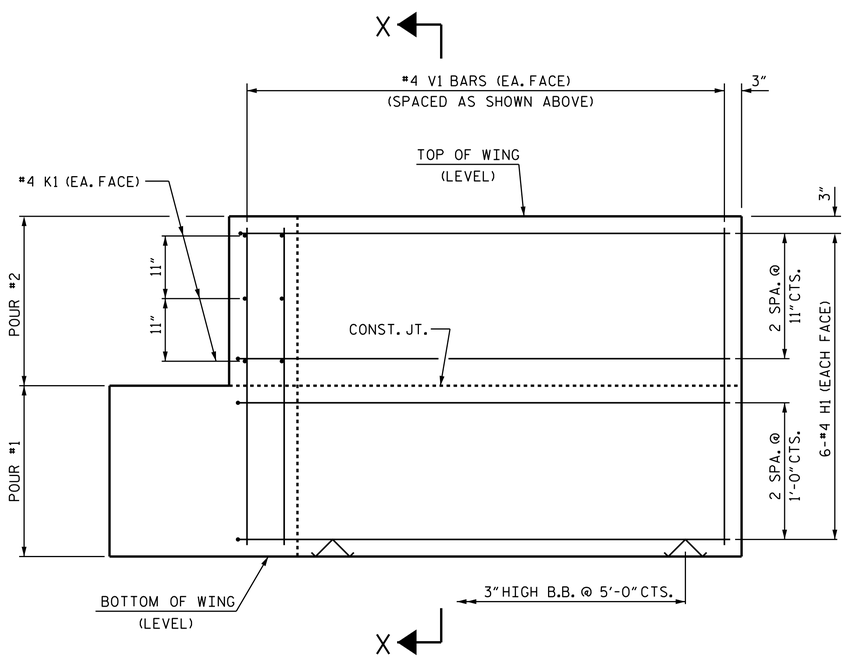

ELEVATION OF WING (W1)

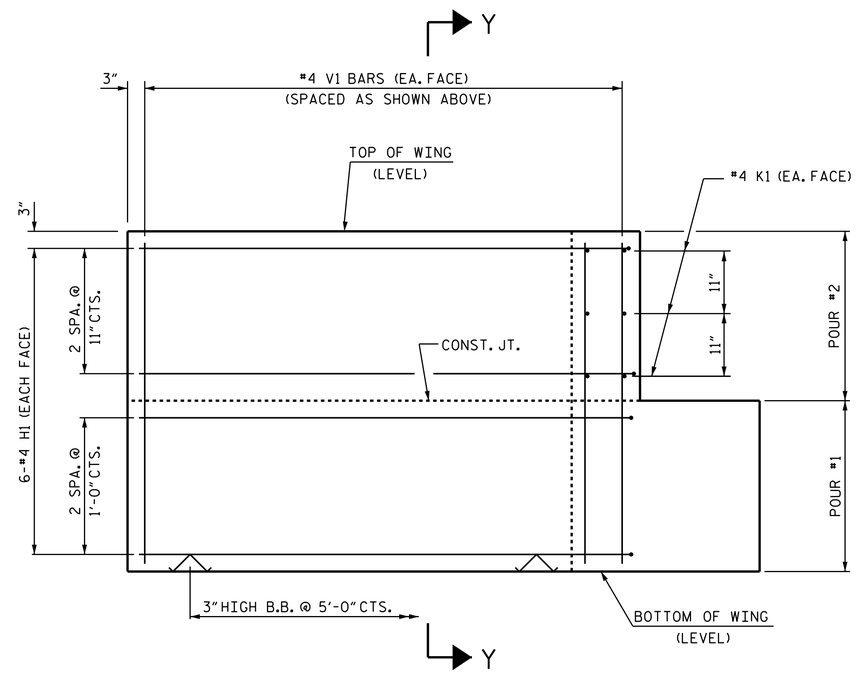

ELEVATION OF WING (W2)

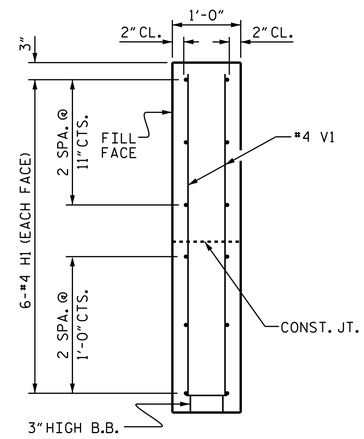

SECTION Y-Y

WING DETAILS

PROJECT NO. 17BP.4.R.65

WAYNE COUNTY

STATION: 15+69.50 -L-

SHEET 3 OF 4

STATE OF NORTH CAROLINA
DEPARTMENT OF TRANSPORTATION
RALEIGH

SUBSTRUCTURE

END BENT
WING DETAILS

NORTH CAROLINA PROFESSIONAL SEAL 22005 ENGINEER A. KEITH PASCHAL

DocuSigned by: A. Keith Paschal F8B6AD6DB2FC48F...
8/12/2015

ASSEMBLED BY : C.C.WILLIAMS	DATE : 7/2015		
CHECKED BY : A.K.PASCHAL	DATE : 8/2015		
DRAWN BY : DGE	02/10	REV. 4/15	MAA/TMG
CHECKED BY : MKT	02/10		

REVISIONS						SHEET NO.
NO.	BY:	DATE:	NO.	BY:	DATE:	S-13
1			3			TOTAL SHEETS
2			4			18

12-AUG-2015 10:04
S:\DPG1\Division4\17BP4R65\CCWilliams\17BP4R65_SMU_CS.dgn
kpaschal

STD. NO. EB_30_90S