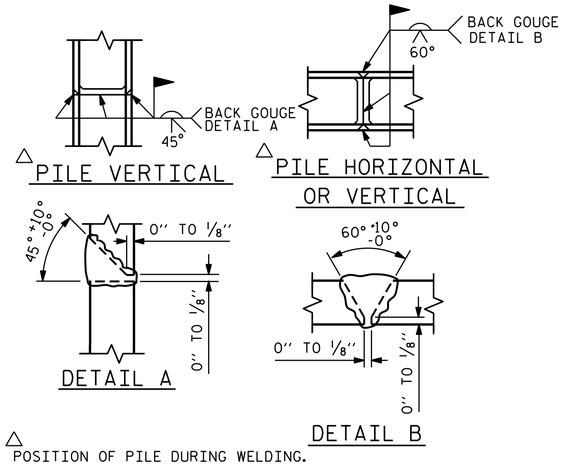

△ POSITION OF PILE DURING WELDING.

PILE SPLICE DETAILS

BAR TYPES

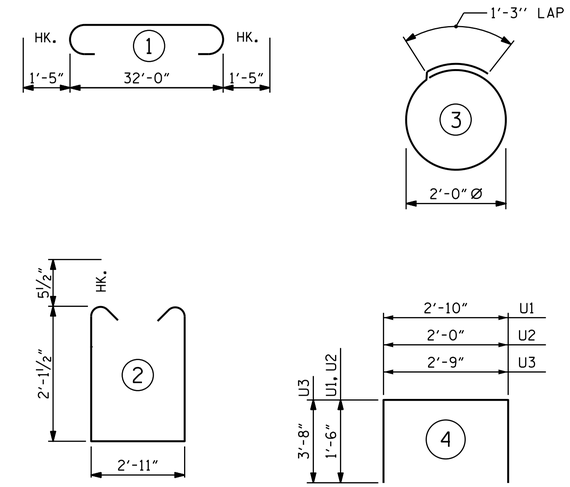

ALL BAR DIMENSIONS ARE OUT TO OUT.

BILL OF MATERIAL
FOR ONE BENT

BAR	NO.	SIZE	TYPE	LENGTH	WEIGHT
B1	4	#10	1	34'-10"	600
B2	4	#10	STR	32'-2"	554
B3	4	#5	STR	32'-2"	134
B4	8	#4	STR	17'-4"	93
B5	8	#4	STR	2'-11"	16
D1	40	#6	STR	1'-6"	90
S1	32	#5	2	8'-1"	270
S2	14	#4	3	7'-7"	71
U1	4	#4	4	5'-10"	16
U2	6	#4	4	5'-0"	20
U3	2	#9	4	10'-1"	69

REINFORCING STEEL (FOR ONE BENT) 1933 LBS

CLASS A CONCRETE BREAKDOWN (FOR ONE BENT)

TOTAL CLASS A CONCRETE 9.8 C.Y.

HP 14 X 73 GALVANIZED STEEL PILES (FOR ONE BENT)

No. 7 LIN. FT. 245

PILE EXCAVATION IN SOIL LIN. FT. 133

PILE EXCAVATION NOT IN SOIL LIN. FT. 63

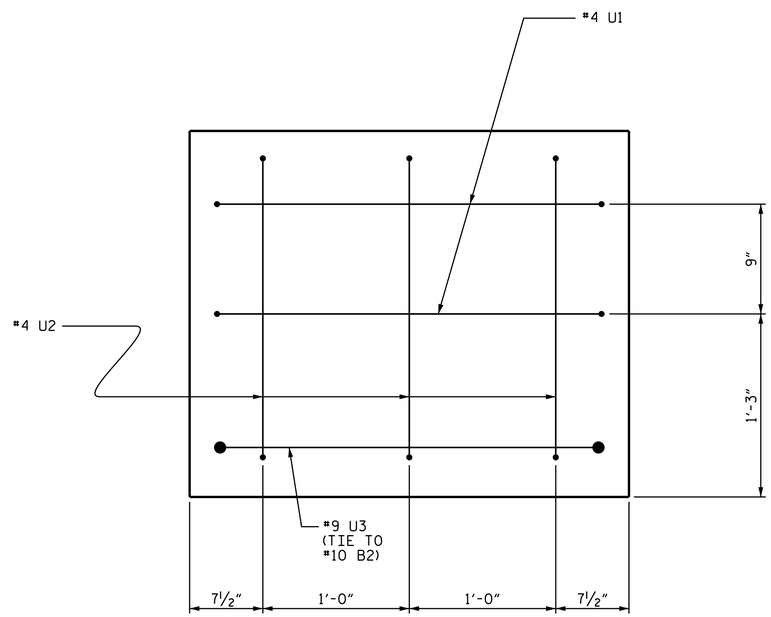

END OF CAP VIEW
(TYPICAL BOTH ENDS)

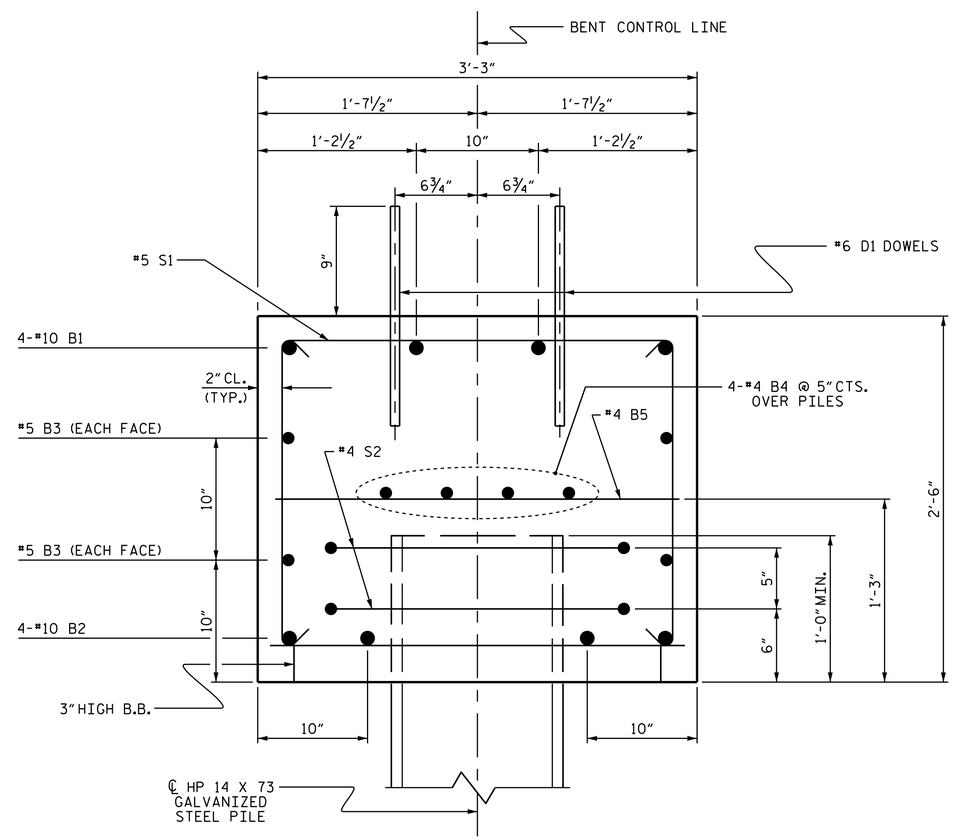

SECTION A-A

NORTH CAROLINA PROFESSIONAL SEAL 22005 ENGINEER A. KEITH PASCHAL

DocuSigned by: A. Keith Paschal F8B6AD6DB2FC48F...

8/12/2015

PROJECT NO. 17BP.4.R.65

WAYNE COUNTY

STATION: 15+69.50 -L-

SHEET 2 OF 2

STATE OF NORTH CAROLINA
DEPARTMENT OF TRANSPORTATION
RALEIGH

SUBSTRUCTURE

BENT No. 1

REVISIONS						SHEET NO.
NO.	BY:	DATE:	NO.	BY:	DATE:	S-16
1			3			TOTAL SHEETS
2			4			18

DRAWN BY : C.C.WILLIAMS DATE : 8/2015
CHECKED BY : A.K.PASCHAL DATE : 8/2015

DRAWN BY : DGE 05/10
CHECKED BY : MKT 05/10
REV. 11/14 MAA/TMG

12-AUG-2015 10:04
S:\DPG1\Division4\17BP4R65\CCWilliams\17BP4R65_SMU_CS.dgn
kpaschal

STD. NO. 14" HP_BT_30_90S_<60'