WBS # 45350.3.14

CONTRACT #

F.A. PROJECT NO. BRZ-1949(4)

EXISTING BRIDGE No. 239
24'-0" CLEAR ROADWAY
SPANS: 2 @ 30'-6"
REINF. CONC. FLOOR ON I-BEAMS
END BENTS & INT. BENT-
REINF. CONC. CAPS ON TIMBER PILES
CRUTCH BENT: STEEL

TBM: BM#1
RR SPIKE IN BASE OF 15" OAK
67.50' RIGHT OF -L- STA. 15+28.18
ELEV. 177.96

EXISTING UTILITIES TO BE RELOCATED BY OTHERS.

RALPH H. PEGRAM
DB 2470 PG 892

CLARA ANN L. WOODS
DB 1743 PG 783

MARK D. & AUDREY S. THOMPSON
DB 1293 PG 452

STRICKLAND PROPERTIES
DB 2120 PG 366

DAISY W. BAINES HEIRS
NO RECORDS

87'-4½" TOTAL LENGTH
FILL FACE TO FILL FACE
ALONG ℄ SURVEY -L- &
EXTENDED TANGENT

41'-2¼" SPAN 'A'

46'-2¼" SPAN 'B'

BEGIN PAVEMENT
STA. 11+00.00 -L-

STA. 12+68.74 -L- (PC)

STA. 12+37.58 -L- (PT)

STA. 13+81.11 -L- (PT)

STA. 14+10.00 -L-
℄ BRIDGE

STA. 15+11.56 -L- (PC)

STA. 15+80.24 -L- (PT)

END APPROACH SLAB
STA. 14+64.69 -L-

END PAVEMENT
STA. 16+40.00 -L-

TAIL DITCH
SEE DETAIL 'A'

CLASS 'B' RIP RAP
2 TON W/ 7 S.Y.
GEOTEXTILE
(TYP.)

EXISTING
BRIDGE #239
(REMOVE)

12' GRV

AT-1
G.R.
ANCHOR

RETAIN
15" RCP

SPINT
TEL

EXISTING R/W

TO SR 1941

TO SR 1945

SR-1949 LILES RD. 21' BST

GR LENGTH
= 50'-0"

GR LENGTH = 106'-3"

GR LENGTH = 81'-3"
(TYP. U.O.N.)

SHOULDER BERM
GUTTER (TYP.)

EXTENDED TANGENT

℄ SURVEY -L-

N 55° 17' 51"E

N 48° 08' 38"E

N 47° 21' 25"E

SLOPE STAKE
LINE (TYP.)

TYPE-350
G.R. ANCHOR
(TYP. U.O.N.)

BEGIN APPROACH SLAB
STA. 13+55.31 -L-

WORK POINT 1
STA. 13+66.31 -L-

WORK POINT 2
STA. 14+07.50 -L-

WORK POINT 3
STA. 14+53.69 -L-

90°00'00"
TO EXT. TAN.
(TYP.)

CLASS II RIP RAP
W/ GEOTEXTILE
(TYP.)

UNCLASSIFIED
STRUCTURE
EXCAVATION
(TYP.)

TOISNOT SWAMP

WLB

JS NEU

PDE

PP

B1-A
B2-A
EB1-A
EB2-A
EB1-B
EB2-B
TB2GI
15"
15"-CL IV

N 29°51'17"E
257.31'

N 43°29'01" W
140.17'

N 43°29'01" W
30.02'

N 41°59'57" W
126.95'

N 41°59'57" W
30.00'

N 15°35'10" E
3243.60'

+56

+65

WOODS

## PLAN

SCALE: 1" = 20'

| | |
|---|---|
| PI = 12+10.00<br>EL = 182.55'<br>VC = 220'<br>K = 118<br>D.S. = 55 mph | PI = 14+10.00<br>EL = 183.55'<br>VC = 160'<br>K = 120<br>D.S. = 55 mph |
| (-)1.3604% △ (+)0.5015% | (+)0.5015% △ (-)0.8329% |

GRADE DATA
-L- (SR 1949)

◓ DENOTES GEO-TECH BORE HOLE LOCATIONS.

✳ DENOTES TYPE III GUARDRAIL CONNECTION REQ'D.
SEE "GUARDRAIL ANCHORAGE FOR VERTICAL CONCRETE BARRIER RAIL" SHEET.

NOTE: GUARDRAIL LENGTHS AS SHOWN INCLUDE ANCHOR UNITS.

U.O.N. - UNLESS OTHERWISE NOTED

FOR PAVEMENT LAYOUT, R/W LAYOUT & DITCH DETAIL
SEE "ROADWAY DETAILS" SHEET.

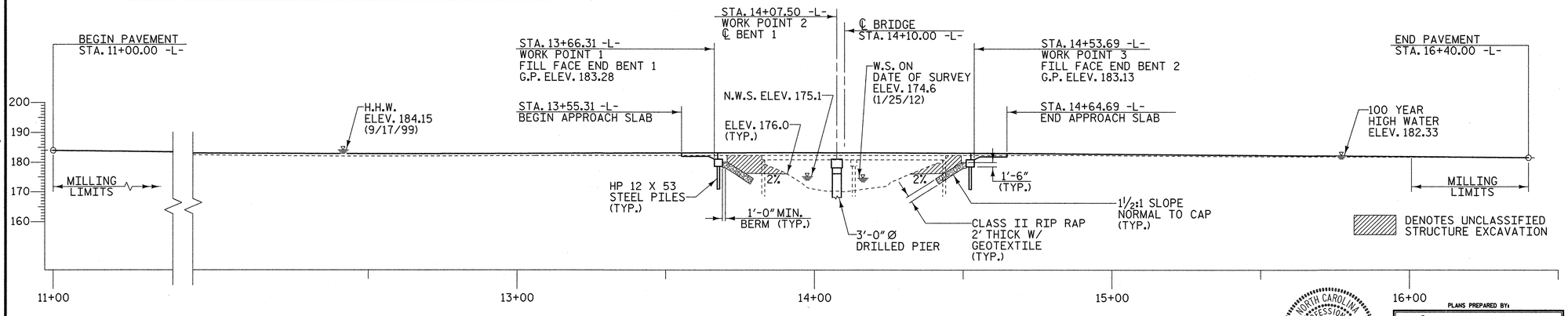


## PROFILE ALONG ℄ SURVEY

SCALE: 1" = 20'

PROJECT NO. BD-5104M

NASH COUNTY

STATION: 14+10.00 -L-

REPLACES BRIDGE NO. 239

STATE OF NORTH CAROLINA
DEPARTMENT OF TRANSPORTATION
RALEIGH

# BRIDGE ON SR 1949 OVER TOISNOT SWAMP BETWEEN SR 1941 & SR 1945

30'-10" CLEAR ROADWAY - 90°SKEW

| REVISIONS | | | | | | SHEET NO. |
|---|---|---|---|---|---|---|
| NO. | BY: | DATE: | NO. | BY: | DATE: | 1 |
| 1 | | | 3 | | | TOTAL SHEETS |
| 2 | | | 4 | | | 27 |

PLANS PREPARED BY:

MULKEY
ENGINEERS & CONSULTANTS
PO Box 32127
Raleigh, N.C. 27636
(919) 851-1912
(919) 851-1918 (FAX)
WWW.MULKEYINC.COM
NC LICENSE NO. C-1081

NORTH CAROLINA PROFESSIONAL ENGINEER SEAL 19661 KEVIN AUSTIN 1/24/13

DRAWN BY : W. B. ALLEN DATE : 10/12
CHECKED BY : W. A. DAVIS DATE : 1/13

1/29/2013 9:32:55 AM R:\Structures\BD5104M_SD_GD_0k.dgn

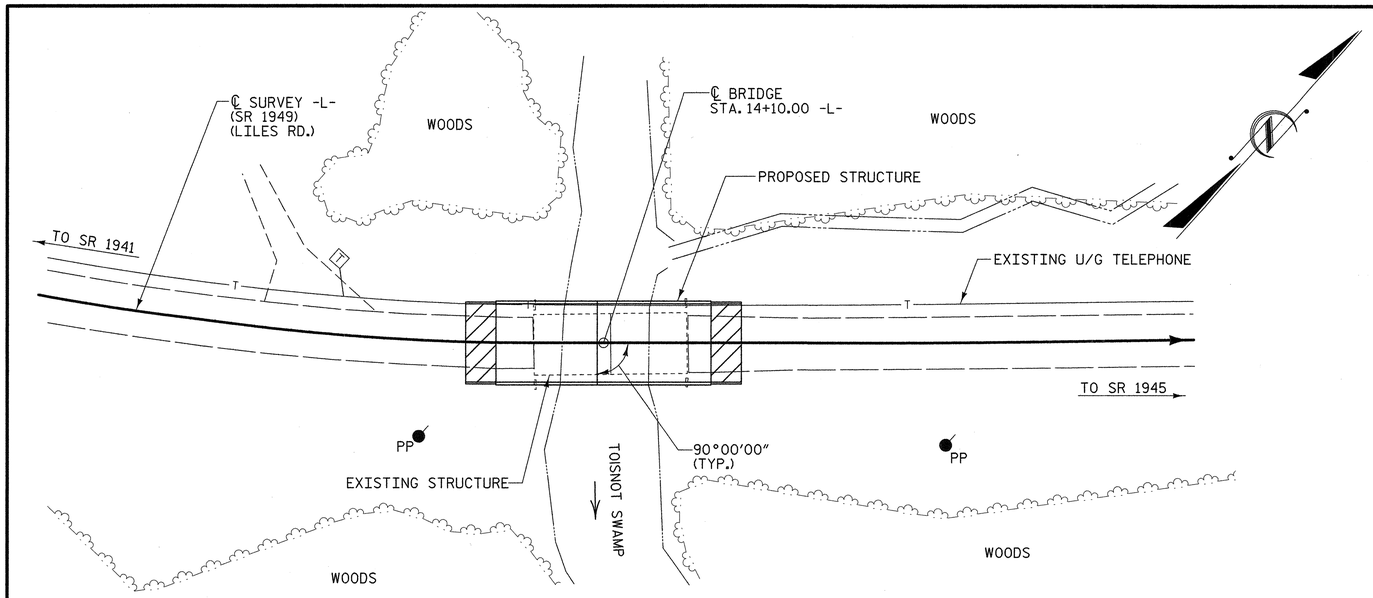


# LOCATION SKETCH

## TOTAL BILL OF MATERIAL

| | REMOVAL OF EXISTING STRUCTURE | 3'-0" DIA. DRILLED PIERS | PERMANENT STEEL CASING FOR 3'-0" DIA. DRILLED PIERS | SID INSPECTION | SPT TESTING | CSL TESTING | UNCLASSIFIED STRUCTURE EXCAVATION | CLASS A CONCRETE | BRIDGE APPROACH SLABS | REINFORCING STEEL | SPIRAL COLUMN REINFORCING STEEL |
|---|---|---|---|---|---|---|---|---|---|---|---|
| | LUMP SUM | LIN. FT. | LIN. FT. | EACH | EACH | EACH | LUMP SUM | CU. YARDS | LUMP SUM | LBS. | LBS. |
| SUPERSTRUCTURE | LUMP SUM | | | | | | | | LUMP SUM | | |
| END BENT 1 | | | | | | | LUMP SUM | 14.3 | | 2127 | |
| BENT 1 | | 78 | 37.5 | | | | | 16.3 | | 8490 | 1570 |
| END BENT 2 | | | | | | | LUMP SUM | 14.3 | | 2127 | |
| TOTAL | LUMP SUM | 78 | 37.5 | 1 | 3 | 1 | LUMP SUM | 44.9 | LUMP SUM | 12,744 | 1570 |

## TOTAL BILL OF MATERIAL

| | HP 12 X 53 STEEL PILES | | STEEL PILE POINTS | VERTICAL CONCRETE BARRIER RAIL | RIP RAP CLASS II (2'-0" THICK) | GEOTEXTILE FOR DRAINAGE | ELASTOMERIC BEARINGS | 3'-0" X 1'-9" PRESTRESSED CONCRETE CORED SLABS | |
|---|---|---|---|---|---|---|---|---|---|
| | NO. | LIN. FT. | EACH | LIN. FT. | TONS | SQ. YARDS | LUMP SUM | NO. | LIN. FT. |
| SUPERSTRUCTURE | | | | 170.26 | | | LUMP SUM | 22 | 935.00 |
| END BENT 1 | 7 | 105 | 7 | | 142 | 158 | | | |
| BENT 1 | | | | | | | | | |
| END BENT 2 | 7 | 105 | 7 | | 132 | 147 | | | |
| TOTAL | 14 | 210 | 14 | 170.26 | 274 | 305 | LUMP SUM | 22 | 935.00 |

HYDROGRAPHIC DATA:

| | |
|---|---|
| DESIGN DISCHARGE - | 700 CFS |
| FREQUENCY OF DESIGN FLOOD - | 10 YEAR |
| DESIGN HIGH WATER ELEVATION - | 179.4 |
| DRAINAGE AREA - | 9.8 SQ. MI. |
| BASIC DISCHARGE (Q 100) - | 1500 CFS |
| BASIC HIGH WATER ELEVATION - | 182.33 |

OVERTOPPING FLOOD DATA:

| | |
|---|---|
| OVERTOPPING DISCHARGE - | 935 CFS |
| FREQUENCY OF OVERTOPPING FLOOD - | < 25 YEAR |
| OVERTOPPING FLOOD ELEVATION - | 180.4 |

OVERTOPPING OCCURS AT ROADWAY STA. 17+45 -L- ± AT HIGH SIDE SHOULDER.

DRAWN BY : W. B. ALLEN DATE : 12/12
CHECKED BY : W. A. DAVIS DATE : 1/13

1/29/2013 9:33:40 AM R:\Structures\BD5104M_SD_02.dgn

## NOTES

ASSUMED LIVE LOAD = HL-93 OR ALTERNATE LOADING.

THIS BRIDGE HAS BEEN DESIGNED IN ACCORDANCE WITH THE AASHTO LRFD BRIDGE DESIGN SPECIFICATIONS.

THIS BRIDGE IS LOCATED IN SEISMIC ZONE 1.

FOR OTHER DESIGN DATA AND GENERAL NOTES, SEE SHEET SN.

FOR EROSION CONTROL MEASURES SEE EROSION CONTROL PLANS.

REMOVAL OF THE EXISTING BRIDGE SHALL BE PERFORMED SO AS NOT TO ALLOW DEBRIS TO FALL INTO THE WATER. THE CONTRACTOR SHALL REMOVE THE BRIDGE AND SUBMIT PLANS FOR THE DEMOLITION IN ACCORDANCE WITH ARTICLE 402-2 OF THE STANDARD SPECIFICATIONS.

THE MATERIAL SHOWN ON SHEET 1 IN THE CROSS-HATCHED AREA SHALL BE EXCAVATED FOR A DISTANCE OF 25 FT. EACH SIDE OF CENTERLINE ROADWAY AS DIRECTED BY THE ENGINEER. THIS WORK WILL BE PAID FOR AT THE CONTRACT LUMP SUM PRICE FOR UNCLASSIFIED STRUCTURE EXCAVATION.

THE SUBSTRUCTURE OF THE EXISTING BRIDGE INDICATED ON THE PLANS IS FROM THE BEST INFORMATION AVAILABLE. SINCE THIS INFORMATION IS SHOWN FOR THE CONVENIENCE OF THE CONTRACTOR, THE CONTRACTOR SHALL HAVE NO CLAIM WHATSOEVER AGAINST THE DEPARTMENT OF TRANSPORTATION FOR ANY DELAYS OR ADDITIONAL COST INCURRED BASED ON DIFFERENCES BETWEEN THE EXISTING BRIDGE SUBSTRUCTURE SHOWN ON THE PLANS AND THE ACTUAL CONDITIONS AT THE PROJECT SITE.

INASMUCH AS THE PAINT SYSTEM ON THE EXISTING STRUCTURAL STEEL CONTAINS LEAD, THE CONTRACTOR'S ATTENTION IS DIRECTED TO ARTICLE 107-1, OF THE STANDARD SPECIFICATIONS. ANY COSTS RESULTING FROM COMPLIANCE WITH APPLICABLE STATE OR FEDERAL REGULATIONS PERTAINING TO HANDLING OF MATERIALS CONTAINING LEAD BASED PAINT SHALL BE INCLUDED IN THE BID PRICE FOR "REMOVAL OF EXISTING STRUCTURE."

THIS STRUCTURE HAS BEEN DESIGNED IN ACCORDANCE WITH HEC 18, "EVALUATING SCOUR AT BRIDGES", MAY 2001.

THE CONTRACTOR SHALL PROVIDE INDEPENDENT ASSURANCE SAMPLES OF REINFORCING STEEL AS FOLLOWS: FOR PROJECTS UP TO 400 TONS OF REINFORCING STEEL, ONE 30 INCH SAMPLE OF EACH SIZE BAR USED, AND FOR PROJECTS OVER 400 TONS OF REINFORCING STEEL, TWO 30 INCH SAMPLES OF EACH SIZE BAR USED. THE BARS FROM WHICH THE SAMPLES ARE TAKEN MUST THEN BE SPLICED WITH REPLACEMENT BARS OF THE SIZE AND LENGTH OF THE SAMPLE, PLUS A MINIMUM LAP SPLICE OF THIRTY BAR DIAMETERS. PAYMENT FOR THE SAMPLES OF REINFORCING STEEL SHALL BE CONSIDERED INCIDENTAL TO VAROIUS PAY ITEMS.

FOR PILES, SEE SECTION 450 OF THE STANDARD SPECIFICATIONS.

PILES AT END BENT NO. 1 ARE DESIGNED FOR A FACTORED RESISTANCE OF 59 TONS PER PILE.

PILES AT END BENT NO. 2 ARE DESIGNED FOR A FACTORED RESISTANCE OF 61 TONS PER PILE.

DRIVE PILES AT END BENT NO. 1 TO A REQUIRED DRIVING RESISTANCE OF 100 TONS PER PILE.

DRIVE PILES AT END BENT NO. 2 TO A REQUIRED DRIVING RESISTANCE OF 105 TONS PER PILE.

STEEL H-PILE POINTS ARE REQUIRED FOR STEEL H-PILES AT END BENT NO. 1 AND END BENT NO. 2. FOR STEEL PILE POINTS, SEE SECTION 450 OF THE STANDARD SPECIFICATIONS.

FOR DRILLED PIERS, SEE SECTION 411 OF THE STANDARD SPECIFICATIONS.

DRILLED PIERS AT BENT NO. 1 ARE DESIGNED FOR A FACTORED RESISTANCE OF 360 TONS PER PIER. CHECK FIELD CONDITIONS FOR THE REQUIRED TIP RESISTANCE OF 40 TSF.

PERMANENT STEEL CASINGS ARE REQUIRED FOR DRILLED PIERS AT BENT NO. 1 DO NOT EXTEND PERMANENT STEEL CASINGS BELOW ELEVATION 163.5 FT. WITHOUT PRIOR APPROVAL FROM THE ENGINEER. THE ENGINEER WILL DETERMINE THE NEED FOR PERMANENT STEEL CASINGS.

INSTALL DRILLED PIERS AT BENT NO. 1 THAT EXTEND TO AN ELEVATION NO HIGHER THAN 150 FT. AND SATISFY THE REQUIRED TIP RESISTANCE.

THE SCOUR CRITICAL ELEVATIONS FOR BENT NO. 1 ARE ELEVATION 163 FT. SCOUR ELEVATIONS ARE USED TO MONITOR POSSIBLE SCOUR PROBLEMS DURING THE LIFE OF THE STRUCTURE.

SPT MAY BE REQUIRED FOR DRILLED PIERS. THE ENGINEER WILL DETERMINE THE NEED FOR SPT. FOR SPT TESTING, SEE SECTION 411 OF THE STANDARD SPECIFICATIONS.

CSL TUBES AND TESTING ARE REQUIRED FOR DRILLED PIERS AT BENT NO. 1. FOR CSL TESTING, SEE SECTION 411 OF THE STANDARD SPECIFICATIONS.

SID INSPECTIONS MAY BE REQUIRED FOR DRILLED PIERS. THE ENGINEER WILL DETERMINE THE NEED FOR SID INSPECTIONS. FOR SID INSPECTIONS, SEE SECTION 411 OF THE STANDARD SPECIFICATIONS.

ADT = 1500 FOR YEAR 2010.

ROADWAY APPROACH EMBANKMENT SHALL BE WIDENED AS NECESSARY FOR GUARDRAIL INSTALLATION.

FOR SUBMITTAL OF WORKING DRAWINGS, SEE SPECIAL PROVISIONS.

FOR FALSEWORK AND FORMWORK, SEE SPECIAL PROVISIONS.

FOR CRANE SAFETY, SEE SPECIAL PROVISIONS.

FOR GROUT FOR STRUCTURES, SEE SPECIAL PROVISIONS.

NO DECK DRAINS REQUIRED.

ASPHALT WEARING SURFACE IS INCLUDED IN ROADWAY QUANTITY ON ROADWAY PLANS.

NORTH CAROLINA PROFESSIONAL SEAL 19661 ENGINEER KEVIN AUSTIN 1/21/13

PLANS PREPARED BY:

MULKEY
ENGINEERS & CONSULTANTS
PO BOX 33127
RALEIGH, N.C. 27636
(919) 851-1912
(919) 851-1918 (FAX)
WWW.MULKEYINC.COM
NC LICENSE NO. C-1021

PROJECT NO. BD-5104M
NASH COUNTY
STATION: 14+10.00 -L-

REPLACES BRIDGE NO. 239

STATE OF NORTH CAROLINA
DEPARTMENT OF TRANSPORTATION
RALEIGH

# LOCATION SKETCH & TOTAL BILL OF MATERIAL

30'-10" CLEAR ROADWAY - 90°SKEW

| REVISIONS | | | | | | SHEET NO. |
|---|---|---|---|---|---|---|
| NO. | BY: | DATE: | NO. | BY: | DATE: | 2 |
| 1 | | | 3 | | | TOTAL SHEETS |
| 2 | | | 4 | | | 27 |

# LOAD AND RESISTANCE FACTOR RATING (LRFD) SUMMARY FOR PRESTRESSED CONCRETE GIRDERS

| LEVEL | | VEHICLE | WEIGHT (W) (TONS) | CONTROLLING LOAD RATING | MINIMUM RATING FACTORS (RF) | TONS = W X RF | STRENGTH I LIMIT STATE | | | | | | | | | | SERVICE III LIMIT STATE | | | | | | COMMENT NUMBER |
|---|---|---|---|---|---|---|---|---|---|---|---|---|---|---|---|---|---|---|---|---|---|---|---|
| | | | | | | | | MOMENT | | | | | SHEAR | | | | | MOMENT | | | | | | |
| | | | | | | | LIVELOAD FACTORS | DISTRIBUTION FACTORS (DF) | RATING FACTOR | SPAN | GIRDER LOCATION | DISTANCE FROM LEFT END OF SPAN (ft) | DISTRIBUTION FACTORS (DF) | RATING FACTOR | SPAN | GIRDER LOCATION | DISTANCE FROM LEFT END OF SPAN (ft) | LIVELOAD FACTORS | DISTRIBUTION FACTORS (DF) | RATING FACTOR | SPAN | GIRDER LOCATION | DISTANCE FROM LEFT END OF SPAN (ft) | |
| DESIGN LOAD RATING | | HL-93(Inv) | N/A | (1) | 1.319 | -- | 1.75 | 0.278 | 1.76 | 40' | EL | 19.5 | 0.549 | **1.32** | 40' | EL | **1.95** | 0.80 | 0.278 | 1.55 | 40' | EL | 19.5 | |
| | | HL-93(Opr) | N/A | -- | 1.709 | -- | 1.35 | 0.278 | 2.28 | 40' | EL | 19.5 | 0.549 | 1.71 | 40' | EL | 1.95 | N/A | -- | -- | -- | -- | -- | |
| | | HS-20(Inv) | 36.000 | (2) | 1.540 | 55.449 | 1.75 | 0.278 | 2.21 | 40' | EL | 19.5 | 0.549 | **1.54** | 40' | EL | **1.95** | 0.80 | 0.278 | 1.94 | 40' | EL | 19.5 | |
| | | HS-20(Opr) | 36.000 | -- | 1.997 | 71.878 | 1.35 | 0.278 | 2.86 | 40' | EL | 19.5 | 0.549 | 2 | 40' | EL | 1.95 | N/A | -- | -- | -- | -- | -- | |
| LEGAL LOAD RATING | SV | SNSH | 13.500 | -- | 3.606 | 48.687 | 1.4 | 0.278 | 5.1 | 40' | EL | 19.5 | 0.549 | 4.13 | 40' | EL | 1.95 | 0.80 | 0.278 | 3.61 | 40' | EL | 19.5 | |
| | | SNGARBS2 | 20.000 | -- | 2.964 | 59.289 | 1.4 | 0.278 | 4.19 | 40' | EL | 15.6 | 0.549 | 3.07 | 40' | EL | 1.95 | 0.80 | 0.278 | 2.96 | 40' | EL | 19.5 | |
| | | SNAGRIS2 | 22.000 | -- | 2.906 | 63.929 | 1.4 | 0.278 | 4.09 | 40' | EL | 15.6 | 0.549 | 2.91 | 40' | EL | 1.95 | 0.80 | 0.278 | 2.92 | 40' | EL | 15.6 | |
| | | SNCOTTS3 | 27.250 | -- | 1.803 | 49.125 | 1.4 | 0.278 | 2.55 | 40' | EL | 19.5 | 0.549 | 2.07 | 40' | EL | 1.95 | 0.80 | 0.278 | 1.80 | 40' | EL | 19.5 | |
| | | SNAGGRS4 | 34.925 | -- | 1.623 | 56.667 | 1.4 | 0.278 | 2.29 | 40' | EL | 19.5 | 0.549 | 1.82 | 40' | EL | 1.95 | 0.80 | 0.278 | 1.62 | 40' | EL | 19.5 | |
| | | SNS5A | 35.550 | -- | 1.578 | 56.107 | 1.4 | 0.278 | 2.23 | 40' | EL | 19.5 | 0.549 | 1.9 | 40' | EL | 1.95 | 0.80 | 0.278 | 1.58 | 40' | EL | 19.5 | |
| | | SNS6A | 39.950 | -- | 1.502 | 59.992 | 1.4 | 0.278 | 2.12 | 40' | EL | 19.5 | 0.549 | 1.77 | 40' | EL | 1.95 | 0.80 | 0.278 | 1.50 | 40' | EL | 19.5 | |
| | | SNS7B | 42.000 | (3) | 1.432 | 60.149 | 1.4 | 0.278 | 2.02 | 40' | EL | 19.5 | 0.549 | 1.81 | 40' | EL | 1.95 | 0.80 | 0.278 | **1.43** | 40' | EL | **19.5** | |
| | TTST | TNAGRIT3 | 33.000 | -- | 1.848 | 60.976 | 1.4 | 0.278 | 2.61 | 40' | EL | 19.5 | 0.549 | 2.08 | 40' | EL | 1.95 | 0.80 | 0.278 | 1.85 | 40' | EL | 19.5 | |
| | | TNT4A | 33.075 | -- | 1.872 | 61.901 | 1.4 | 0.278 | 2.65 | 40' | EL | 19.5 | 0.549 | 1.98 | 40' | EL | 1.95 | 0.80 | 0.278 | 1.87 | 40' | EL | 19.5 | |
| | | TNT6A | 41.600 | -- | 1.587 | 66.032 | 1.4 | 0.278 | 2.24 | 40' | EL | 19.5 | 0.549 | 1.94 | 40' | EL | 1.95 | 0.80 | 0.278 | 1.59 | 40' | EL | 19.5 | |
| | | TNT7A | 42.000 | -- | 1.627 | 68.354 | 1.4 | 0.278 | 2.3 | 40' | EL | 19.5 | 0.549 | 1.79 | 40' | EL | 1.95 | 0.80 | 0.278 | 1.63 | 40' | EL | 19.5 | |
| | | TNT7B | 42.000 | -- | 1.664 | 69.888 | 1.4 | 0.278 | 2.35 | 40' | EL | 19.5 | 0.549 | 1.72 | 40' | EL | 1.95 | 0.80 | 0.278 | 1.66 | 40' | EL | 19.5 | |
| | | TNAGRIT4 | 43.000 | -- | 1.619 | 69.61 | 1.4 | 0.278 | 2.28 | 40' | EL | 15.6 | 0.549 | 1.65 | 40' | EL | 1.95 | 0.80 | 0.278 | 1.62 | 40' | EL | 19.5 | |
| | | TNAGT5A | 45.000 | -- | 1.498 | 67.412 | 1.4 | 0.278 | 2.12 | 40' | EL | 19.5 | 0.549 | 1.71 | 40' | EL | 1.95 | 0.80 | 0.278 | 1.50 | 40' | EL | 19.5 | |
| | | TNAGT5B | 45.000 | -- | 1.455 | 65.486 | 1.4 | 0.278 | 2.06 | 40' | EL | 19.5 | 0.549 | 1.56 | 40' | EL | 1.95 | 0.80 | 0.278 | 1.46 | 40' | EL | 19.5 | |

## LOAD FACTORS:

| DESIGN LOAD RATING FACTORS | LIMIT STATE | $\gamma_{DC}$ | $\gamma_{DW}$ |
|---|---|---|---|
| | STRENGTH I | 1.25 | 1.50 |
| | SERVICE III | 1.00 | 1.00 |

## NOTES:

MINIMUM RATING FACTORS ARE BASED ON THE STRENGTH I AND SERVICE III LIMIT STATES.

ALLOWABLE STRESSES FOR SERVICE III LIMIT STATE ARE AS REQUIRED FOR DESIGN.

## COMMENTS:

1.
2.
3.
4.

| (#) CONTROLLING LOAD RATING |
|---|
| (1) DESIGN LOAD RATING (HL-93) |
| (2) DESIGN LOAD RATING (HS-20) |
| (3) LEGAL LOAD RATING ** |
| ** SEE CHART FOR VEHICLE TYPE |

| GIRDER LOCATION |
|---|
| I - INTERIOR GIRDER |
| EL - EXTERIOR LEFT GIRDER |
| ER - EXTERIOR RIGHT GIRDER |

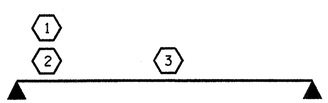


LRFR SUMMARY
FOR SPAN 'A'

PROJECT NO. BD-5104M
NASH COUNTY
STATION: 14+10.00 -L-

STATE OF NORTH CAROLINA
DEPARTMENT OF TRANSPORTATION
RALEIGH

STANDARD
LRFR SUMMARY FOR
40' CORED SLAB UNIT
90° SKEW
(NON-INTERSTATE TRAFFIC)

NORTH CAROLINA PROFESSIONAL SEAL 14045 ENGINEER TIMOTHY W. COGGINS
12/6/12

| REVISIONS | | | | | | SHEET NO. |
|---|---|---|---|---|---|---|
| NO. | BY: | DATE: | NO. | BY: | DATE: | 3 |
| 1 | | | 3 | | | TOTAL SHEETS |
| 2 | | | 4 | | | 27 |

ASSEMBLED BY : REZA KOUCHEKI DATE : 12/6/12
CHECKED BY : B.L.GREEN DATE : 12/14/12
DRAWN BY : CVC 6/10
CHECKED BY : DNS 6/10

21-DEC-2012 12:09
S:\DPG1\Tim\Division 4 LIBR\BD-5104M\BD-5104M_SD_TS.dgn
tcoggins

STD. NO. 21LRFR1_90S_40L

# LOAD AND RESISTANCE FACTOR RATING (LRFD) SUMMARY FOR PRESTRESSED CONCRETE GIRDERS

| LEVEL | | VEHICLE | WEIGHT (W) (TONS) | CONTROLLING LOAD RATING | MINIMUM RATING FACTORS (RF) | TONS = W X RF | STRENGTH I LIMIT STATE | | | | | | | | | | | SERVICE III LIMIT STATE | | | | | | COMMENT NUMBER |
|---|---|---|---|---|---|---|---|---|---|---|---|---|---|---|---|---|---|---|---|---|---|---|---|---|
| | | | | | | | | MOMENT | | | | | SHEAR | | | | | | MOMENT | | | | | | |
| | | | | | | | LIVELOAD FACTORS | DISTRIBUTION FACTORS (DF) | RATING FACTOR | SPAN | GIRDER LOCATION | DISTANCE FROM LEFT END OF SPAN (ft) | DISTRIBUTION FACTORS (DF) | RATING FACTOR | SPAN | GIRDER LOCATION | DISTANCE FROM LEFT END OF SPAN (ft) | LIVELOAD FACTORS | DISTRIBUTION FACTORS (DF) | RATING FACTOR | SPAN | GIRDER LOCATION | DISTANCE FROM LEFT END OF SPAN (ft) | |
| DESIGN LOAD RATING | | HL-93(Inv) | N/A | 1 | 1.088 | -- | 1.75 | 0.277 | 1.34 | 45' | EL | 22 | 0.539 | 1.23 | 45' | EL | 2.2 | 0.80 | 0.277 | **1.09** | 45' | EL | **22** | |
| | | HL-93(Opr) | N/A | -- | 1.590 | -- | 1.35 | 0.277 | 1.74 | 45' | EL | 22 | 0.539 | 1.59 | 45' | EL | 2.2 | N/A | -- | -- | -- | -- | -- | |
| | | HS-20(Inv) | 36.000 | 2 | 1.336 | 48.104 | 1.75 | 0.277 | 1.65 | 45' | EL | 22 | 0.539 | 1.45 | 45' | EL | 2.2 | 0.80 | 0.277 | **1.34** | 45' | EL | **22** | |
| | | HS-20(Opr) | 36.000 | -- | 1.882 | 67.763 | 1.35 | 0.277 | 2.14 | 45' | EL | 22 | 0.539 | 1.88 | 45' | EL | 2.2 | N/A | -- | -- | -- | -- | -- | |
| LEGAL LOAD RATING | SV | SNSH | 13.500 | -- | 2.611 | 35.252 | 1.4 | 0.277 | 4.02 | 45' | EL | 22 | 0.539 | 4.01 | 45' | EL | 2.2 | 0.80 | 0.277 | 2.61 | 45' | EL | 22 | |
| | | SNGARBS2 | 20.000 | -- | 2.108 | 42.166 | 1.4 | 0.277 | 3.25 | 45' | EL | 22 | 0.539 | 2.94 | 45' | EL | 2.2 | 0.80 | 0.277 | 2.11 | 45' | EL | 22 | |
| | | SNAGRIS2 | 22.000 | -- | 2.067 | 45.466 | 1.4 | 0.277 | 3.15 | 45' | EL | 17.6 | 0.539 | 2.77 | 45' | EL | 2.2 | 0.80 | 0.277 | 2.07 | 45' | EL | 22 | |
| | | SNCOTTS3 | 27.250 | -- | 1.304 | 35.527 | 1.4 | 0.277 | 2.01 | 45' | EL | 22 | 0.539 | 2.01 | 45' | EL | 2.2 | 0.80 | 0.277 | 1.30 | 45' | EL | 22 | |
| | | SNAGGRS4 | 34.925 | -- | 1.150 | 40.181 | 1.4 | 0.277 | 1.77 | 45' | EL | 22 | 0.539 | 1.74 | 45' | EL | 2.2 | 0.80 | 0.277 | 1.15 | 45' | EL | 22 | |
| | | SNS5A | 35.550 | -- | 1.121 | 39.841 | 1.4 | 0.277 | 1.73 | 45' | EL | 22 | 0.539 | 1.79 | 45' | EL | 2.2 | 0.80 | 0.277 | 1.12 | 45' | EL | 22 | |
| | | SNS6A | 39.950 | -- | 1.056 | 42.175 | 1.4 | 0.277 | 1.63 | 45' | EL | 22 | 0.539 | 1.67 | 45' | EL | 2.2 | 0.80 | 0.277 | 1.06 | 45' | EL | 22 | |
| | | SNS7B | 42.000 | 3 | 1.006 | 42.268 | 1.4 | 0.277 | 1.55 | 45' | EL | 22 | 0.539 | 1.68 | 45' | EL | 2.2 | 0.80 | 0.277 | **1.01** | 45' | EL | **22** | |
| | TTST | TNAGRIT3 | 33.000 | -- | 1.296 | 42.759 | 1.4 | 0.277 | 2 | 45' | EL | 22 | 0.539 | 1.96 | 45' | EL | 2.2 | 0.80 | 0.277 | 1.30 | 45' | EL | 22 | |
| | | TNT4A | 33.075 | -- | 1.309 | 43.305 | 1.4 | 0.277 | 2.02 | 45' | EL | 22 | 0.539 | 1.88 | 45' | EL | 2.2 | 0.80 | 0.277 | 1.31 | 45' | EL | 22 | |
| | | TNT6A | 41.600 | -- | 1.099 | 45.712 | 1.4 | 0.277 | 1.69 | 45' | EL | 22 | 0.539 | 1.83 | 45' | EL | 2.2 | 0.80 | 0.277 | 1.10 | 45' | EL | 22 | |
| | | TNT7A | 42.000 | -- | 1.120 | 47.043 | 1.4 | 0.277 | 1.73 | 45' | EL | 22 | 0.539 | 1.69 | 45' | EL | 2.2 | 0.80 | 0.277 | 1.12 | 45' | EL | 22 | |
| | | TNT7B | 42.000 | -- | 1.166 | 48.975 | 1.4 | 0.277 | 1.8 | 45' | EL | 22 | 0.539 | 1.61 | 45' | EL | 2.2 | 0.80 | 0.277 | 1.17 | 45' | EL | 22 | |
| | | TNAGRIT4 | 43.000 | -- | 1.111 | 47.757 | 1.4 | 0.277 | 1.71 | 45' | EL | 22 | 0.539 | 1.55 | 45' | EL | 2.2 | 0.80 | 0.277 | 1.11 | 45' | EL | 22 | |
| | | TNAGT5A | 45.000 | -- | 1.033 | 46.505 | 1.4 | 0.277 | 1.59 | 45' | EL | 22 | 0.539 | 1.59 | 45' | EL | 2.2 | 0.80 | 0.277 | 1.03 | 45' | EL | 22 | |
| | | TNAGT5B | 45.000 | -- | 1.009 | 45.408 | 1.4 | 0.277 | 1.56 | 45' | EL | 22 | 0.539 | 1.47 | 45' | EL | 2.2 | 0.80 | 0.277 | 1.01 | 45' | EL | 22 | |

## LOAD FACTORS:

| DESIGN LOAD RATING FACTORS | LIMIT STATE | $\gamma_{DC}$ | $\gamma_{DW}$ |
|---|---|---|---|
| | STRENGTH I | 1.25 | 1.50 |
| | SERVICE III | 1.00 | 1.00 |

## NOTES:

MINIMUM RATING FACTORS ARE BASED ON THE STRENGTH I AND SERVICE III LIMIT STATES.

ALLOWABLE STRESSES FOR SERVICE III LIMIT STATE ARE AS REQUIRED FOR DESIGN.

## COMMENTS:

1.
2.
3.
4.

**(#) CONTROLLING LOAD RATING**

(1) DESIGN LOAD RATING (HL-93)

(2) DESIGN LOAD RATING (HS-20)

(3) LEGAL LOAD RATING **

** SEE CHART FOR VEHICLE TYPE

**GIRDER LOCATION**

I - INTERIOR GIRDER
EL - EXTERIOR LEFT GIRDER
ER - EXTERIOR RIGHT GIRDER

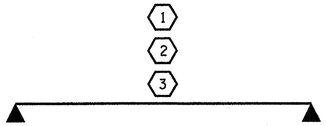


LRFR SUMMARY
FOR SPAN 'B'

PROJECT NO. BD-5104M
NASH COUNTY
STATION: 14+10.00 -L-

STATE OF NORTH CAROLINA
DEPARTMENT OF TRANSPORTATION
RALEIGH

STANDARD
LRFR SUMMARY FOR
45' CORED SLAB UNIT
90° SKEW
(NON-INTERSTATE TRAFFIC)

NORTH CAROLINA PROFESSIONAL SEAL 14045 ENGINEER TIMOTHY W. COGGINS
12/5/12

| REVISIONS | | | | | | SHEET NO. |
|---|---|---|---|---|---|---|
| NO. | BY: | DATE: | NO. | BY: | DATE: | 4 |
| 1 | | | 3 | | | TOTAL SHEETS |
| 2 | | | 4 | | | 27 |

ASSEMBLED BY : REZA KOUCHEKI DATE : 12/6/12
CHECKED BY : B.L.GREEN DATE : 12/14/12
DRAWN BY : CVC 6/10
CHECKED BY : DNS 6/10

21-DEC-2012 12:09
S:\DPG\\Tim\Division 4 LIBR\BD-5104M\BD-5104M_SD_TS.dgn
tcoggins

STD. NO. 21LRFR1_90S_45L

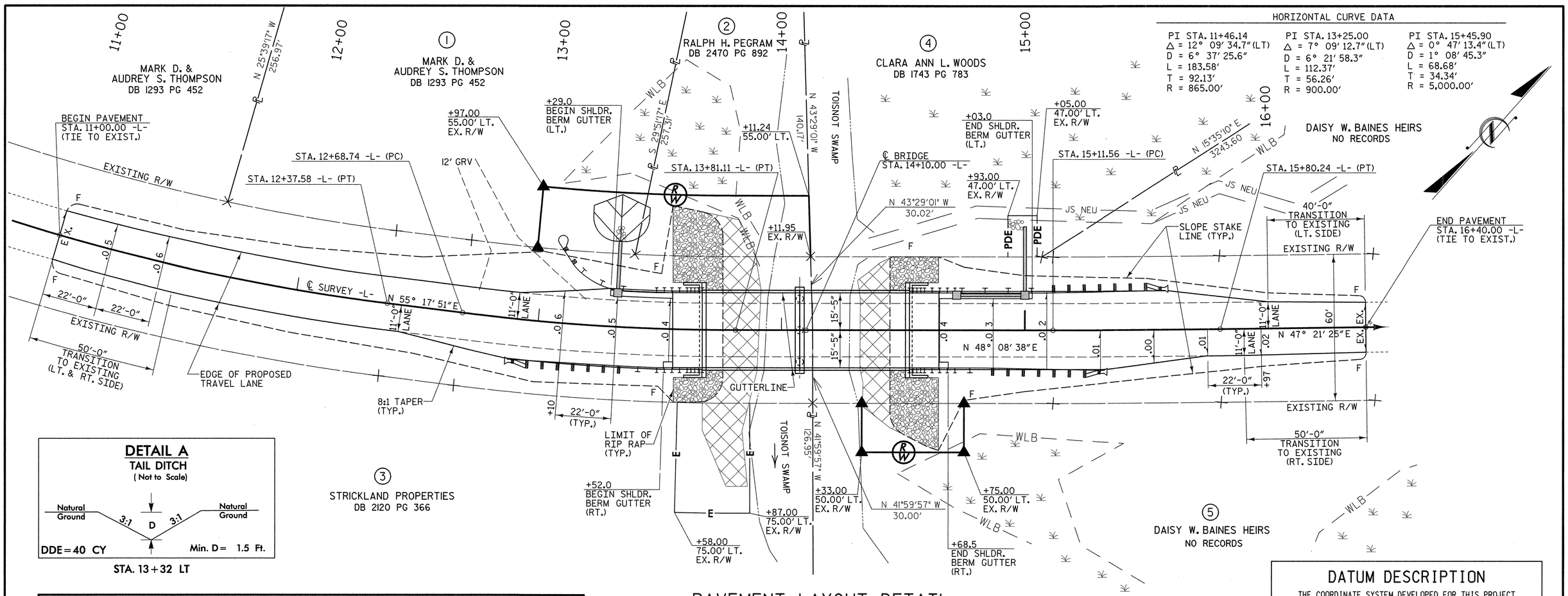


## DETAIL A
### TAIL DITCH
( Not to Scale)




STA. 13+32 LT

## PAVEMENT LAYOUT DETAIL
SCALE: 1" = 20'

## RIGHT OF WAY AREA DATA

| PARCEL NO. | PROPERTY OWNERS NAMES | TOTAL AREA | AREA TAKEN | AREA REMAINING RT. | AREA REMAINING LT. | CONST. EASE. | PERM. DRAIN. EASE. | TEMP. DRAIN. EASE. |
|---|---|---|---|---|---|---|---|---|
| 1 | MARK D. & AUDREY S. THOMPSON | 0.88 AC | 1040 SF | | 0.86 AC | | | |
| 2 | RALPH H. PEGRAM | 12.38 AC | 1725 SF | | 12.34 AC | | | |
| 3 | STRICKLAND PROPERTIES | 160.2 AC | | | | 1366 SF | | |
| 4 | CLARA ANN L. WOODS | 31.66 AC | | | | | 204 SF | |
| 5 | DAISY W. BAINES HEIRS | 49.84 AC | 840 SF | AC | AC | | | |

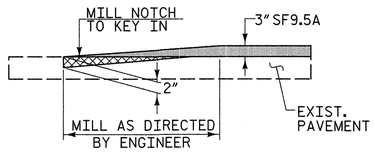


## MILLING DETAIL
MILL EXISTING PAVEMENT AT THE FOLLOWING LOCATIONS
-L- STA. 11+00.00 TO STA. 11+43+/-
-L- STA. 16+00+/- TO STA. 16+40.00

## DATUM DESCRIPTION
THE COORDINATE SYSTEM DEVELOPED FOR THIS PROJECT IS BASED ON THE STATE PLANE COORDINATES ESTABLISHED BY NCDOT FOR MONUMENT "GPS 630239-2" WITH NAD 1983/2007 STATE PLANE GRID COORDINATES OF NORTHING: 764935.017(ft) EASTING: 2278767.229(ft)
ELEVATION: 182.09(ft)
GROUND DISTANCES IN FIELD WERE USED TO DETERMINE COORDINATES FOR "GPS 630239-1" AND "GPS 630239-3"
LOCALIZED HORIZONTAL GROUND DISTANCE FROM "GPS 630239-2" TO -L- STATION 12+37.58 IS S 59° 46' 08.0" W 133.26'
VERTICAL DATUM USED IS NAVD 88

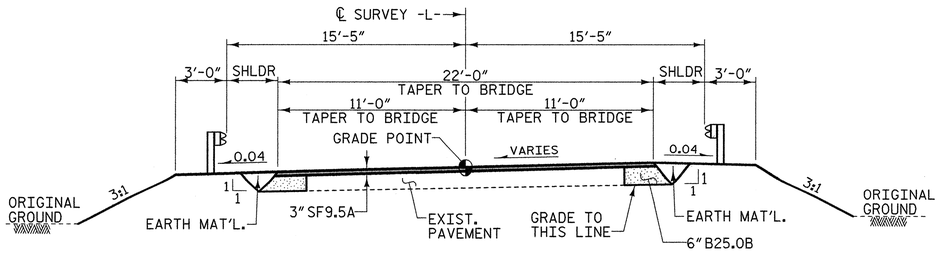


## WIDENING PAVEMENT
FROM -L- STA. 11+00.00 TO -L- STA. 12+25
FROM -L- STA. 14+75 TO -L- STA. 16+40.00

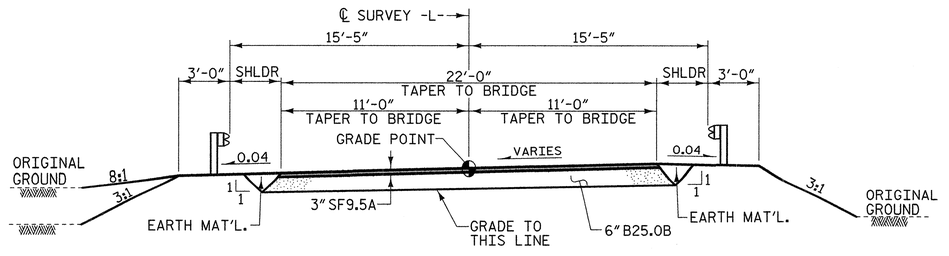


## FULL DEPTH PAVEMENT
FROM -L- STA. 12+25 TO BEGIN BRIDGE
FROM END BRIDGE TO -L- STA. 14+75

## TYPICAL ROADWAY SECTION
WITHIN CONSTRUCTION LIMITS

NORTH CAROLINA PROFESSIONAL ENGINEER SEAL 19661 KEVIN AUSTIN 1/24/13

PLANS PREPARED BY:
MULKEY ENGINEERS & CONSULTANTS
PO Box 33127 RALEIGH, N.C. 27636
(919) 851-1913 (919) 851-1918 (FAX)
WWW.MULKEYINC.COM
NC LICENSE NO. C-1081

PROJECT NO. BD-5104M
NASH COUNTY
STATION: 14+10.00 -L-

REPLACES BRIDGE NO. 239

STATE OF NORTH CAROLINA
DEPARTMENT OF TRANSPORTATION
RALEIGH

# ROADWAY DETAILS

30'-10" CLEAR ROADWAY - 90° SKEW

| REVISIONS | | | | | | SHEET NO. |
|---|---|---|---|---|---|---|
| NO. | BY: | DATE: | NO. | BY: | DATE: | 5 |
| 1 | | | 3 | | | TOTAL SHEETS |
| 2 | | | 4 | | | 27 |

DRAWN BY : W. B. ALLEN DATE : 10/12
CHECKED BY : W. A. DAVIS DATE : 1/13

1/29/2013 9:34:40 AM R:\Structures\BD5104M_SD_GD_03.dgn

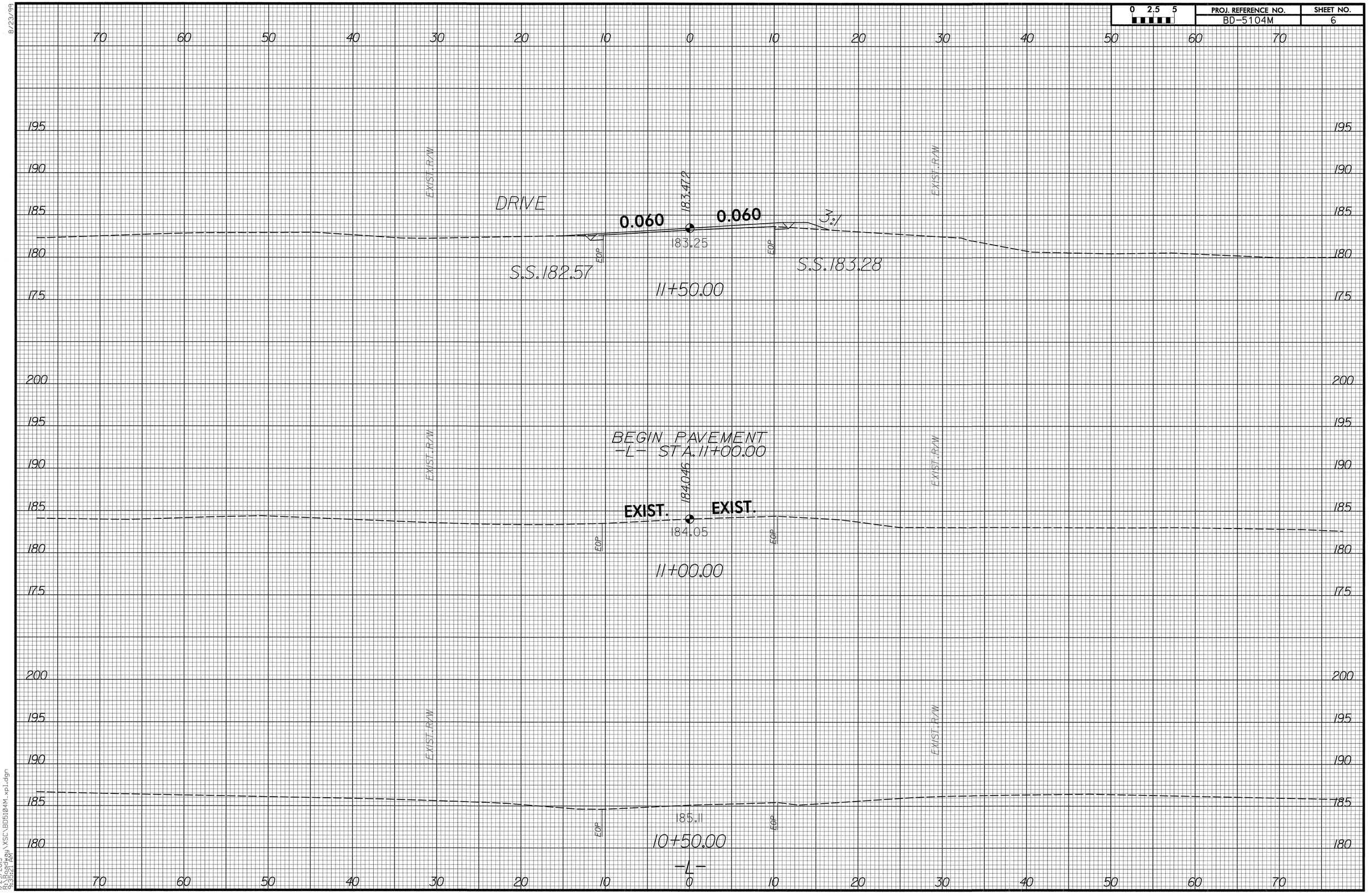


8/23/99

1/29/2013
R:\Roadway\XSC\BD5104M_xpl.dgn
9:35:21 AM

8/23/99

| 0 2.5 5 | PROJ. REFERENCE NO. | SHEET NO. |
|---|---|---|
| | BD-5104M | 7 |

70 60 50 40 30 20 10 0 10 20 30 40 50 60 70

195 190 185 180 175

PROP. R/W

EXIST. R/W

DRIVE

8:1

0.060

183.018

0.060

3:1

EXIST. R/W

EOP

82.27

EOP

S.S. 180.43

13+00.00

S.S. 182.19

195 190 185 180 175

EXIST. R/W

4.6:1

0.060

182.958

0.060

3:1

EXIST. R/W

EOP

182.11

EOP

S.S. 180.69

12+50.00

S.S. 182.25

195 190 185 180 175

EXIST. R/W

4:1

0.060

183.109

0.060

3:1

EXIST. R/W

EOP

182.45

EOP

S.S. 181.36

12+00.00

S.S. 182.53

-L-

70 60 50 40 30 20 10 0 10 20 30 40 50 60 70

1/29/2013
R:\Roadway\XSC\BD5104M_xpl.dgn
8:39:59 AM

8/23/99

| 0 2,5 5 | PROJ. REFERENCE NO. | SHEET NO. |
|---|---|---|
| | BD-5104M | 8 |

70 60 50 40 30 20 10 0 10 20 30 40 50 60 70

195 190 185 180 175 170 165 200 195 190 185 180 175

PROP. R/W

EXIST. R/W

EXIST. R/W

183.299

0.040 0.040

170.98

14+00.00

BEGIN APPROACH SLAB
-L- STA. 13+55.31
BEGIN BRIDGE
-L- STA 13+66.31

WLB

PROP. R/W

EXIST. R/W

183.235

3:1

0.042 0.042

3:1

182.39

EOP

EOP

S.S. 181.12

13+50.00

S.S. 182.37

-L-

70 60 50 40 30 20 10 0 10 20 30 40 50 60 70

1/29/2013
R:\Roadway\XSC\BD5104M_xpl.dgn
8:36:13 AM

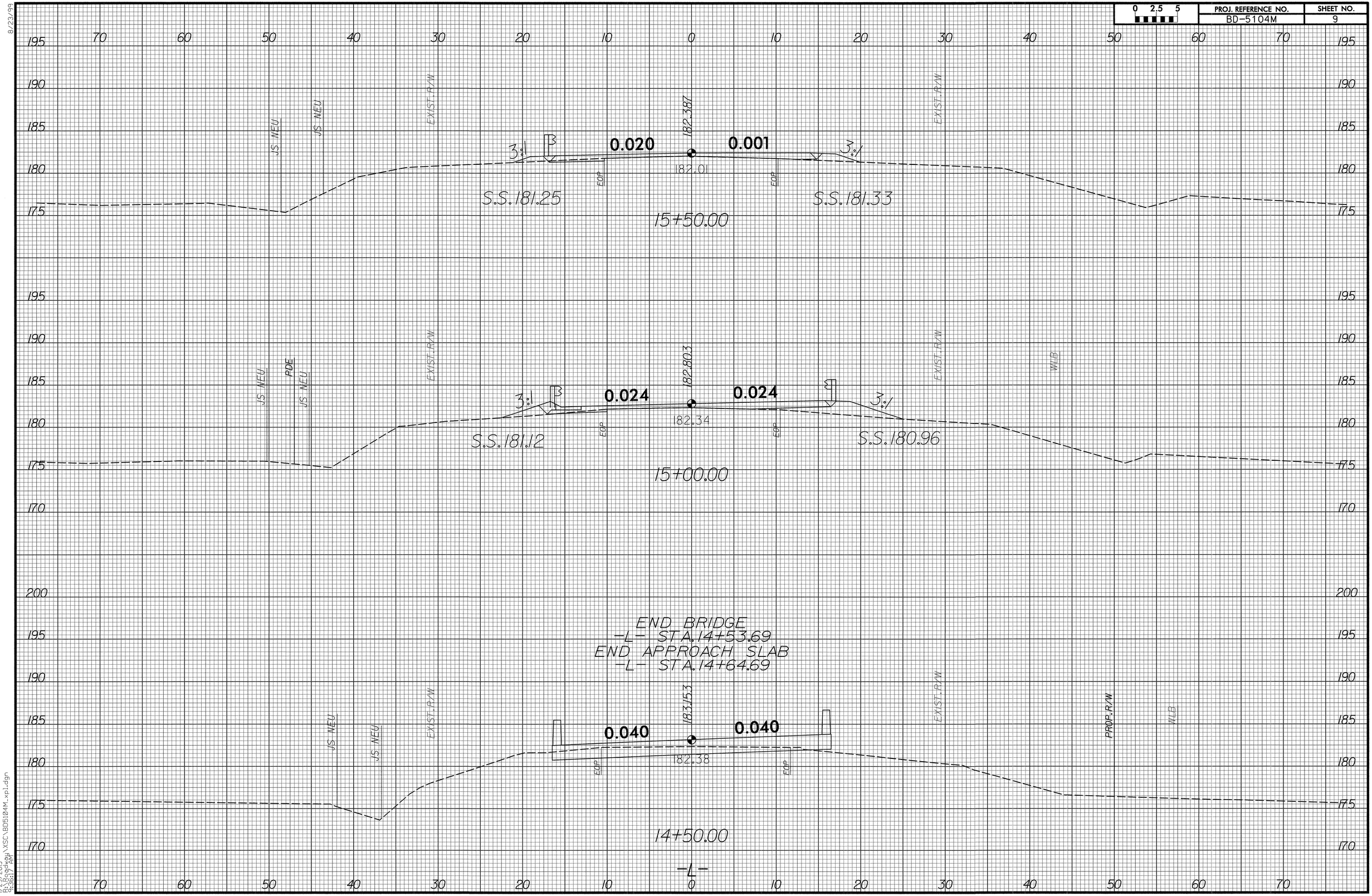


8/23/99

1/29/2013
R:\Roadway\XSC\BD5104M_xpl.dgn
9:36:17 AM

8/23/99

| 0 2.5 5 | PROJ. REFERENCE NO. | SHEET NO. |
|---|---|---|
| | BD-5104M | 10 |

70 60 50 40 30 20 10 0 10 20 30 40 50 60 70

195 190 185 180 175 170

WLB

JS NEU

JS NEU

EXIST R/W

END PAVEMENT
-L- STA.16+40.00

181.970

3:1

0.020

0.020

3:1

181.80

EOP

EOP

EXIST R/W

S.S.181.39

16+00.00

S.S.181.18

-L-

70 60 50 40 30 20 10 0 10 20 30 40 50 60 70

195 190 185 180 175 170

1/29/2013
R:\Roadway\XSC\BD5104M_xpl.dgn
8:38:21 AM

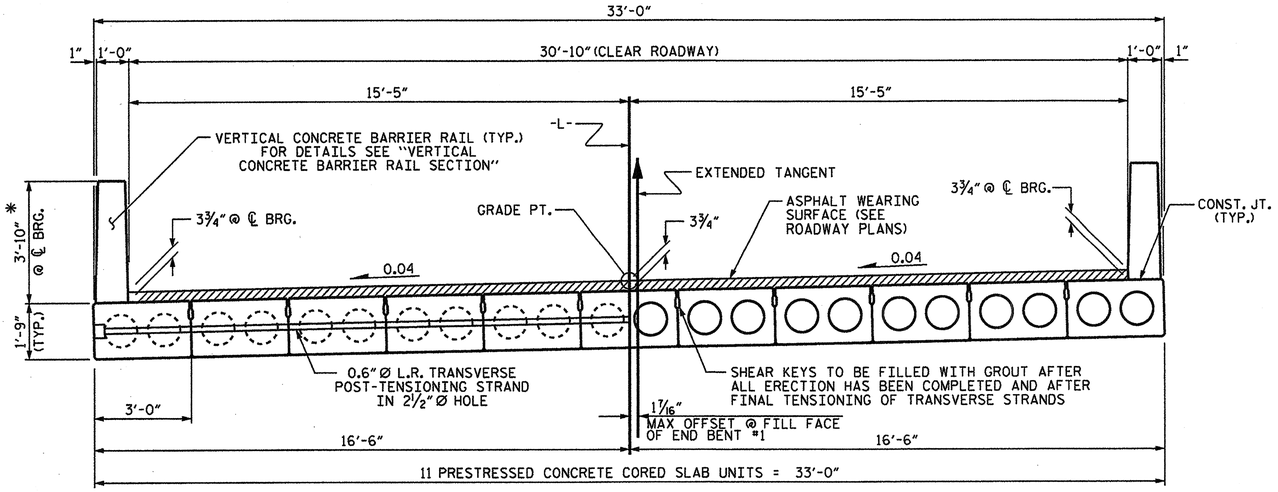


## TYPICAL SECTION

* - THE MAXIMUM BARRIER RAIL HEIGHT AND ASPHALT THICKNESS IS SHOWN. THE HEIGHT OF THE BARRIER RAIL AND ASPHALT THICKNESS VARIES WHILE THE TOP OF THE BARRIER RAIL FOLLOWS THE PROFILE OF THE GUTTERLINE. FOR RAIL HEIGHT DETAILS AND ASPHALT THICKNESS SEE THE "VERTICAL CONCRETE BARRIER RAIL SECTION" DETAIL.

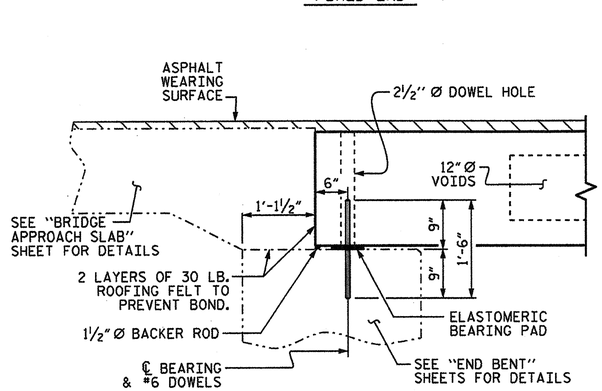


## SECTION AT END BENT

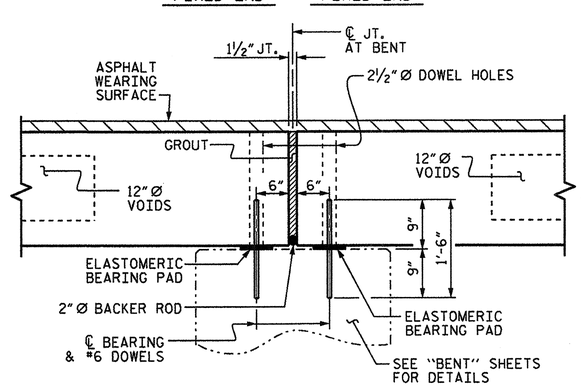


## SECTION AT BENT

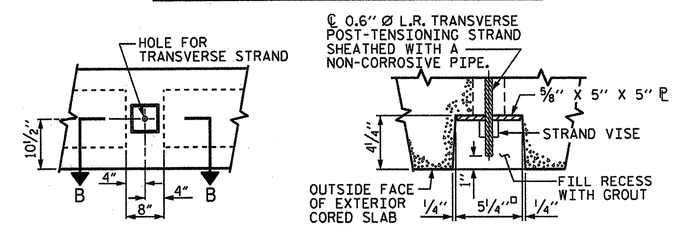


ELEVATION VIEW

SECTION B-B

## GROUTED RECESS AT END OF POST-TENSIONED STRAND OF CORED SLABS

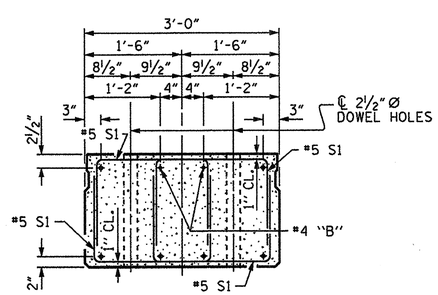


## END ELEVATION

SHOWING PLACEMENT OF DOUBLE STIRRUPS AND LOCATION OF DOWEL HOLES. (STRAND LAYOUT NOT SHOWN.) INTERIOR SLAB UNIT SHOWN-EXTERIOR SLAB UNIT SIMILAR EXCEPT SHEAR KEY LOCATION.

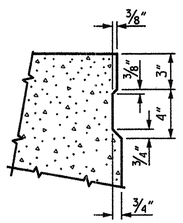


## SHEAR KEY DETAIL

NOTE: OMIT SHEAR KEY ON OUTSIDE FACE OF EXTERIOR CORED SLABS.

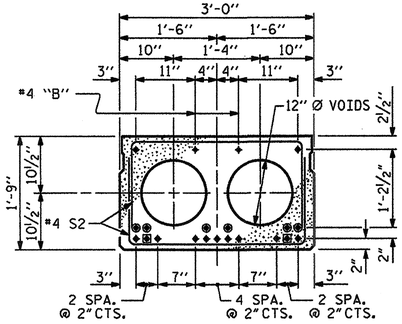


## INTERIOR SLAB SECTION (40' & 45' UNIT)

(13 STRANDS REQUIRED)

## 0.6'' Ø LOW RELAXATION STRAND LAYOUT

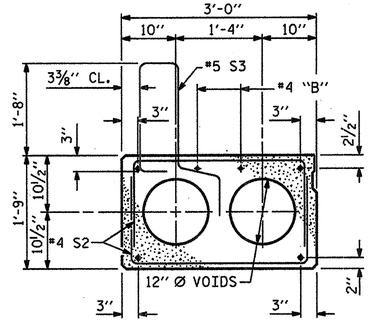


## EXT. SLAB SECTION

(FOR PRESTRESSED STRAND LAYOUT, SEE INTERIOR SLAB SECTION.)

◉ BOND SHALL BE BROKEN ON THESE STRANDS FOR A DISTANCE OF 2'-0" FROM END OF CORED SLAB UNIT. SEE STANDARD SPECIFICATIONS, ARTICLE 1078-7.

◉ OPTIONAL FULL LENGTH DEBONDED STRANDS. THESE STRANDS ARE NOT REQUIRED. IF THE FABRICATOR CHOOSES TO INCLUDE THESE STRANDS IN THE CORED SLAB UNIT, THE STRANDS SHALL BE DEBONDED FOR THE FULL LENGTH OF THE UNIT AT NO ADDITIONAL COST. SEE STANDARD SPECIFICATIONS, ARTICLE 1078-7.

## DEBONDING LEGEND

PROJECT NO. BD-5104M

NASH COUNTY

STATION: 14+10.00 -L-

SHEET 1 OF 4

STATE OF NORTH CAROLINA
DEPARTMENT OF TRANSPORTATION
RALEIGH

STANDARD

# 3'-0" X 1'-9" PRESTRESSED CONCRETE CORED SLAB UNIT 90° SKEW

NORTH CAROLINA PROFESSIONAL SEAL 14045 ENGINEER TIMOTHY L. COGGINS

12/21/12

| REVISIONS | | | | | | SHEET NO. |
|---|---|---|---|---|---|---|
| NO. | BY: | DATE: | NO. | BY: | DATE: | 11 |
| 1 | | | 3 | | | TOTAL SHEETS |
| 2 | | | 4 | | | 27 |

ASSEMBLED BY : REZA KOUCHEKI DATE : 11/21/12
CHECKED BY : B.L.GREEN DATE : 12/14/12
DRAWN BY : DGE 5/09
CHECKED BY : BCH 6/09
REV. 12/11 MAA/AAC

21-DEC-2012 12:09
S:\DPG\Tim\Division 4 LIBR\BD-5104M\BD-5104M_SD_TS.dgn
tcoggins

STD. NO. 21"PCS2_33_90S

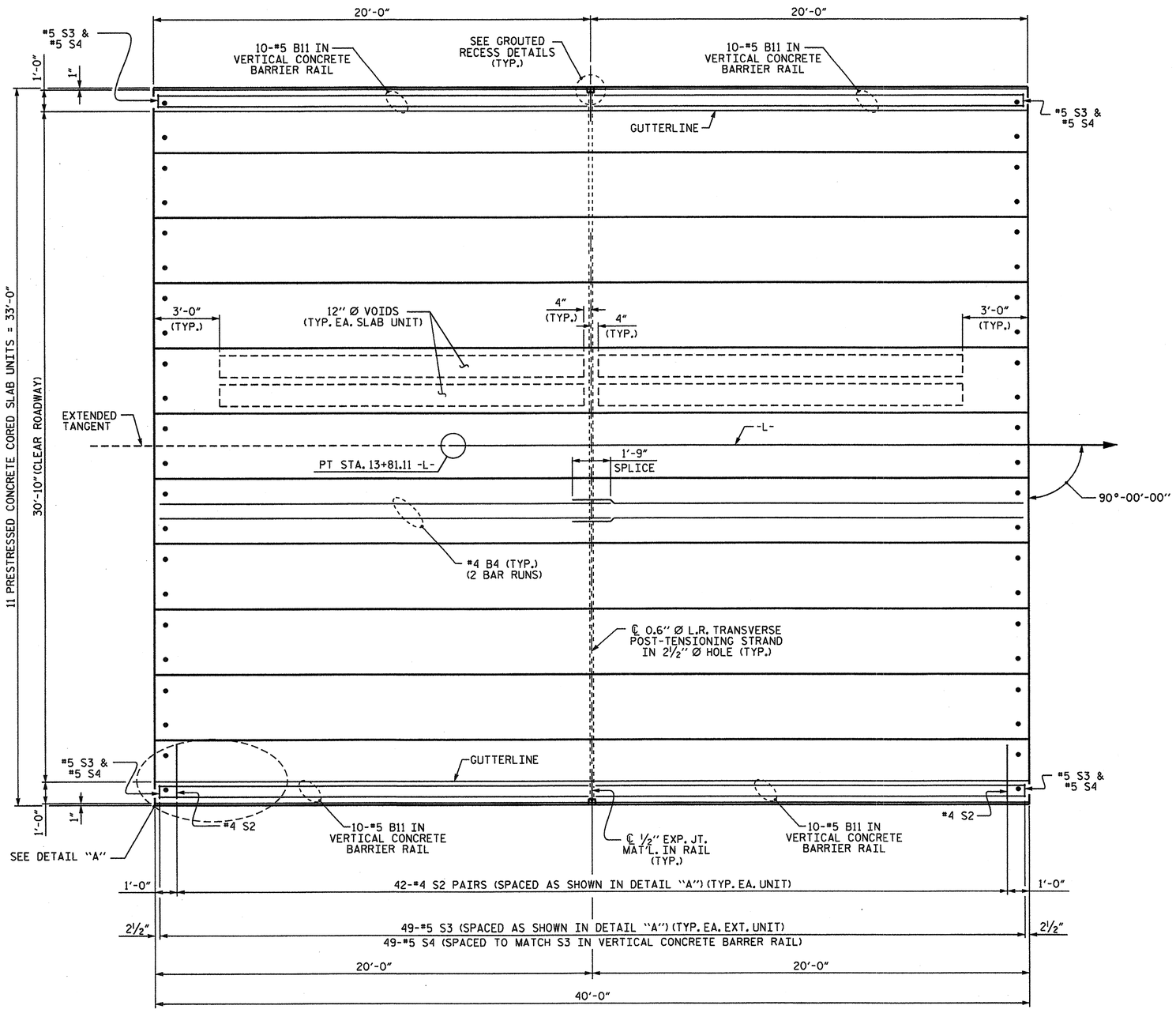


PLAN OF UNIT

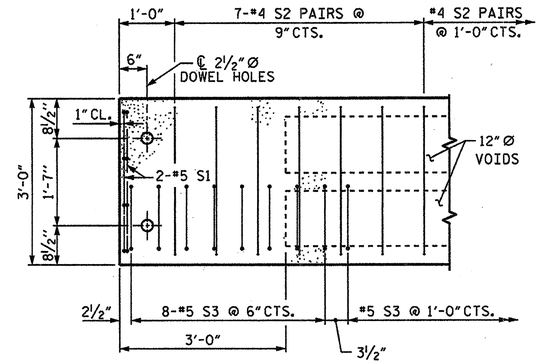


DETAIL "A"

NOTE: EXTERIOR UNIT SHOWN - INTERIOR UNIT SIMILAR EXCEPT OMIT #5 S3 BARS.

| | | | |
|---|---|---|---|
| ASSEMBLED BY : REZA KOUCHEKI | DATE : 11/20/12 | | |
| CHECKED BY : B.L.GREEN | DATE : 12/14/12 | | |
| DRAWN BY : DGE 3/09 | REV. 12/5/11 MAA/AAC | | |
| CHECKED BY : BCH 3/09 | | | |

21-DEC-2012 12:08
S:\DPG\Tim\Division 4 LIBR\BD-5104M\BD-5104M_SD_TS.dgn
tcoggins

NORTH CAROLINA PROFESSIONAL SEAL 14045 ENGINEER TIMOTHY K. COGGINS
12/21/12

PROJECT NO. BD-5104M
NASH COUNTY
STATION: 14+10.00 -L-

SHEET 2 OF 4

STATE OF NORTH CAROLINA
DEPARTMENT OF TRANSPORTATION
RALEIGH

# PLAN OF 40' UNIT 30'-10" CLEAR ROADWAY 90° SKEW

| REVISIONS | | | | | | SHEET NO. |
|---|---|---|---|---|---|---|
| NO. | BY: | DATE: | NO. | BY: | DATE: | 12 |
| 1 | | | 3 | | | TOTAL SHEETS |
| 2 | | | 4 | | | 27 |

STD. NO. 21"PCS_33_90S_40L

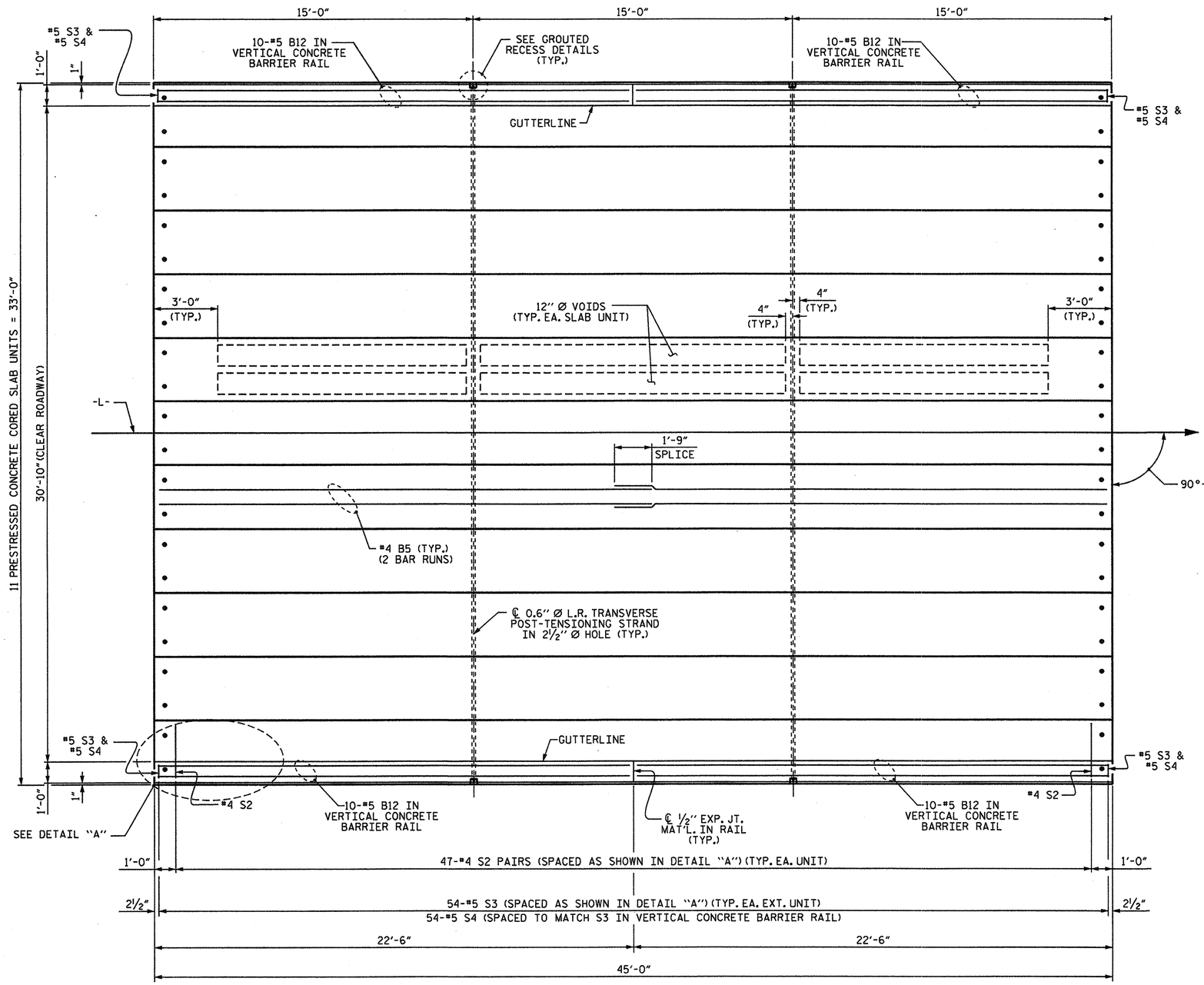


PLAN OF UNIT

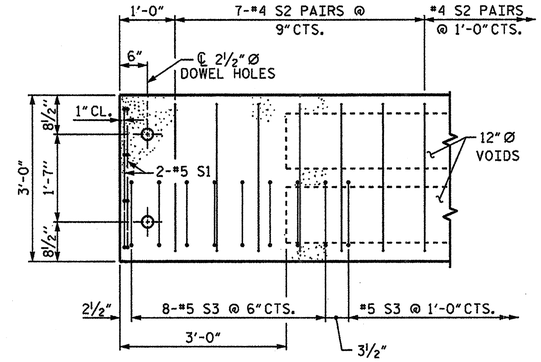


DETAIL "A"

NOTE: EXTERIOR UNIT SHOWN - INTERIOR UNIT SIMILAR EXCEPT OMIT #5 S3 BARS.

| | |
|---|---|
| ASSEMBLED BY : REZA KOUCHEKI | DATE : 11/20/12 |
| CHECKED BY : B.L.GREEN | DATE : 12/14/12 |
| DRAWN BY : DGE 3/09 | REV. 12/5/11 MAA/AAC |
| CHECKED BY : BCH 3/09 | |

21-DEC-2012 12:08
S:\DPG1\Tim\Division 4 LIBR\BD-5104M\BD-5104M_SD_TS.dgn
tcoggins

PROJECT NO. BD-5104M

NASH COUNTY

STATION: 14+10.00 -L-

SHEET 3 OF 4

STATE OF NORTH CAROLINA
DEPARTMENT OF TRANSPORTATION
RALEIGH

# PLAN OF 45' UNIT 30'-10" CLEAR ROADWAY 90° SKEW

NORTH CAROLINA PROFESSIONAL SEAL 14045 ENGINEER TIMOTHY W. COGGINS
12/21/12

| REVISIONS | | | | | | SHEET NO. |
|---|---|---|---|---|---|---|
| NO. | BY: | DATE: | NO. | BY: | DATE: | 13 |
| 1 | | | 3 | | | TOTAL SHEETS |
| 2 | | | 4 | | | 27 |

STD. NO. 21"PCS_33_90S_45L

## BILL OF MATERIAL FOR VERTICAL CONCRETE BARRIER RAIL

| BAR | BARS PER PAIR OF EXTERIOR UNITS | TOTAL NO. | SIZE | TYPE | LENGTH | WEIGHT |
|---|---|---|---|---|---|---|
| | 40' UNIT | | | | | |
| ✱B11 | 40 | 40 | #5 | STR | 19'-7" | 817 |
| ✱S4 | 98 | 98 | #5 | 2 | 7'-2" | 733 |
| ✱EPOXY COATED REINFORCING STEEL | | | | LBS. | | 1550 |
| CLASS AA CONCRETE | | | | CU.YDS. | | 10.5 |
| TOTAL VERTICAL CONCRETE BARRIER RAIL | | | | LN. FT. | | 80.13 |

## BILL OF MATERIAL FOR VERTICAL CONCRETE BARRIER RAIL

| BAR | BARS PER PAIR OF EXTERIOR UNITS | TOTAL NO. | SIZE | TYPE | LENGTH | WEIGHT |
|---|---|---|---|---|---|---|
| | 45' UNIT | | | | | |
| ✱B12 | 40 | 40 | #5 | STR | 22'-1" | 921 |
| ✱S4 | 108 | 108 | #5 | 2 | 7'-2" | 807 |
| ✱EPOXY COATED REINFORCING STEEL | | | | LBS. | | 1728 |
| CLASS AA CONCRETE | | | | CU.YDS. | | 11.8 |
| TOTAL VERTICAL CONCRETE BARRIER RAIL | | | | LN. FT. | | 90.13 |

## GUTTERLINE ASPHALT THICKNESS & RAIL HEIGHT

| 30'-10" CLEAR ROADWAY | ASPHALT OVERLAY THICKNESS | RAIL HEIGHT |
|---|---|---|
| | @ MID-SPAN | @ MID-SPAN |
| | SUPERED SECTION | |
| 40' & 45' UNITS | 2⅝" | 3'-8⅞" |

## CONCRETE RELEASE STRENGTH

| UNIT | PSI |
|---|---|
| 40' & 45' UNITS | 4000 |

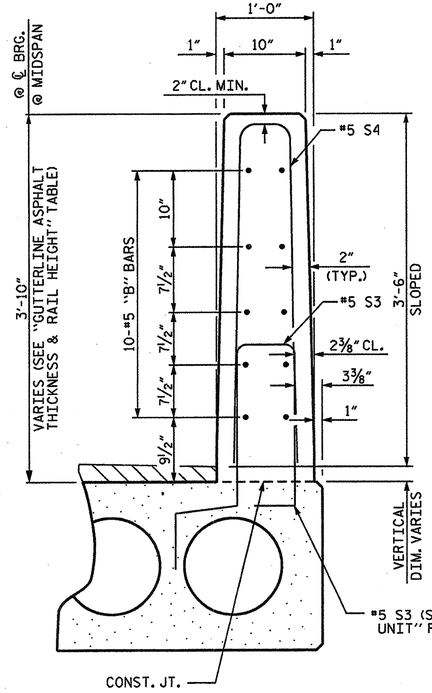


VERTICAL CONCRETE BARRIER RAIL SECTION

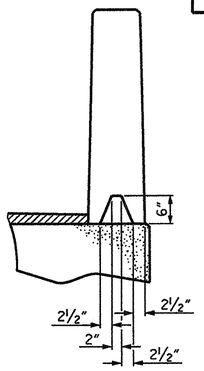


SECTION S-S
AT DAM IN OPEN JOINT
(THIS IS TO BE USED ONLY WHEN SLIP FORM IS USED)

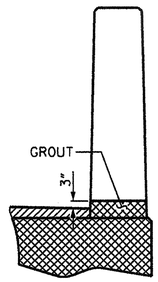


SECTION T-T
AT OPEN JOINT AT BENT
(THIS IS TO BE USED WHERE FOAM JOINT IS NOT USED)

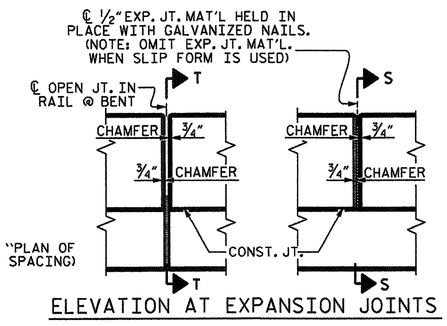


ELEVATION AT EXPANSION JOINTS

## BILL OF MATERIAL FOR ONE 40' CORED SLAB UNIT

| BAR | NUMBER | SIZE | TYPE | EXTERIOR UNIT LENGTH | EXTERIOR UNIT WEIGHT | INTERIOR UNIT LENGTH | INTERIOR UNIT WEIGHT |
|---|---|---|---|---|---|---|---|
| B4 | 4 | #4 | STR | 20'-9" | 55 | 20'-9" | 55 |
| S1 | 8 | #5 | 3 | 4'-3" | 35 | 4'-3" | 35 |
| S2 | 84 | #4 | 3 | 5'-4" | 299 | 5'-4" | 299 |
| ✱S3 | 49 | #5 | 1 | 6'-2" | 315 | | |
| REINFORCING STEEL | | | | LBS. | 389 | | 389 |
| ✱EPOXY COATED REINFORCING STEEL | | | | LBS. | 315 | | |
| 6500 P.S.I. CONCRETE | | | | CU. YDS. | 5.8 | | 5.8 |
| 0.6"Ø L.R. STRANDS | | | | No. | 13 | | 13 |

## BILL OF MATERIAL FOR ONE 45' CORED SLAB UNIT

| BAR | NUMBER | SIZE | TYPE | EXTERIOR UNIT LENGTH | EXTERIOR UNIT WEIGHT | INTERIOR UNIT LENGTH | INTERIOR UNIT WEIGHT |
|---|---|---|---|---|---|---|---|
| B5 | 4 | #4 | STR | 23'-3" | 62 | 23'-3" | 62 |
| S1 | 8 | #5 | 3 | 4'-3" | 35 | 4'-3" | 35 |
| S2 | 94 | #4 | 3 | 5'-4" | 335 | 5'-4" | 335 |
| ✱S3 | 54 | #5 | 1 | 6'-2" | 347 | | |
| REINFORCING STEEL | | | | LBS. | 432 | | 432 |
| ✱EPOXY COATED REINFORCING STEEL | | | | LBS. | 347 | | |
| 6500 P.S.I. CONCRETE | | | | CU. YDS. | 6.5 | | 6.5 |
| 0.6"Ø L.R. STRANDS | | | | No. | 13 | | 13 |

## CORED SLABS REQUIRED

| | NUMBER | LENGTH | TOTAL LENGTH |
|---|---|---|---|
| 40' UNIT | | | |
| EXTERIOR C.S. | 2 | 40'-0" | 80'-0" |
| INTERIOR C.S. | 9 | 40'-0" | 360'-0" |
| TOTAL | 11 | 40'-0" | 440'-0" |

## CORED SLABS REQUIRED

| | NUMBER | LENGTH | TOTAL LENGTH |
|---|---|---|---|
| 45' UNIT | | | |
| EXTERIOR C.S. | 2 | 45'-0" | 90'-0" |
| INTERIOR C.S. | 9 | 45'-0" | 405'-0" |
| TOTAL | 11 | 45'-0" | 495'-0" |

## BAR TYPES

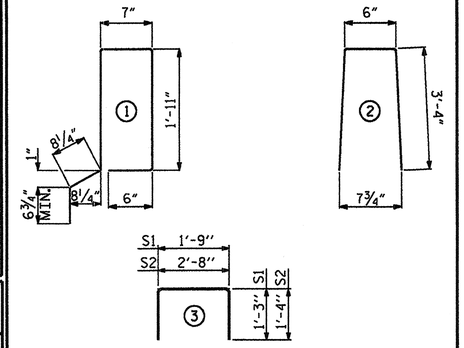


ALL BAR DIMENSIONS ARE OUT TO OUT

## GRADE 270 STRANDS

| | 0.6"Ø L.R. |
|---|---|
| AREA (SQUARE INCHES) | 0.217 |
| ULTIMATE STRENGTH (LBS. PER STRAND) | 58,600 |
| APPLIED PRESTRESS (LBS. PER STRAND) | 43,950 |

## DEAD LOAD DEFLECTION AND CAMBER

| 40' & 45' CORED SLAB UNIT | 3'-0" x 1'-9" 0.6"Ø L.R. STRAND |
|---|---|
| CAMBER (SLAB ALONE IN PLACE) | 1¼" ↑ |
| DEFLECTION DUE TO SUPERIMPOSED DEAD LOAD✱✱ | ⅛" ↓ |
| FINAL CAMBER | 1⅛" ↑ |

✱✱ INCLUDES FUTURE WEARING SURFACE

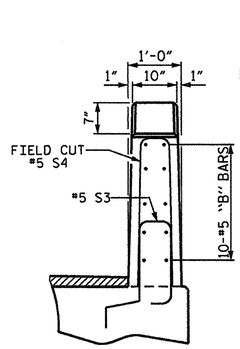


END VIEW

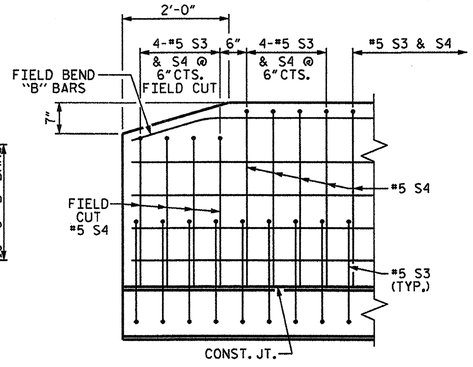


SIDE VIEW

END OF RAIL DETAILS

## NOTES

ALL PRESTRESSING STRANDS SHALL BE 7-WIRE LOW RELAXATION GRADE 270 STRANDS AND SHALL CONFORM TO AASHTO M203 EXCEPT FOR SAMPLING REQUIREMENTS WHICH SHALL BE IN ACCORDANCE WITH THE STANDARD SPECIFICATIONS.

ALL REINFORCING STEEL CAST WITH THE CORED SLAB SECTIONS SHALL BE GRADE 60 AND SHALL BE INCLUDED IN THE UNIT PRICE BID FOR PRESTRESSED CONCRETE CORED SLABS.

RECESSES FOR TRANSVERSE STRANDS SHALL BE GROUTED AFTER THE TENSIONING OF THE STRANDS.

THE 2½"Ø DOWEL HOLES AT FIXED ENDS OF SLAB SECTIONS SHALL BE FILLED WITH NON-SHRINK GROUT.

THE BACKER RODS SHALL CONFORM TO THE REQUIREMENTS OF TYPE M BOND BREAKER. SEE SECTION 1028 OF THE STANDARD SPECIFICATIONS.

WHEN CORED SLABS ARE CAST, AN INTERNAL HOLD-DOWN SYSTEM SHALL BE EMPLOYED TO PREVENT VOIDS FROM RISING OR MOVING SIDEWAYS. AT LEAST SIX WEEKS PRIOR TO CASTING CORED SLABS, THE CONTRACTOR SHALL SUBMIT TO THE ENGINEER FOR REVIEW AND COMMENT, DETAILED DRAWINGS OF THE PROPOSED HOLD-DOWN SYSTEM. IN ADDITION TO STRUCTURAL DETAILS, LOCATION AND SPACING OF THE HOLD-DOWNS SHALL BE INDICATED.

ALL REINFORCING STEEL IN THE VERTICAL CONCRETE BARRIER RAIL SHALL BE EPOXY COATED.

PRESTRESSING STRANDS SHALL BE CUT FLUSH WITH THE CORED SLAB UNIT ENDS.

APPLY EPOXY PROTECTIVE COATING TO CORED SLAB UNIT ENDS.

GROOVED CONTRACTION JOINTS, ½" IN DEPTH, SHALL BE TOOLED IN ALL EXPOSED FACES OF THE BARRIER RAIL AND IN ACCORDANCE WITH ARTICLE 825-10(B) OF THE STANDARD SPECIFICATIONS. A CONTRACTION JOINT SHALL BE LOCATED AT EACH THIRD POINT BETWEEN BARRIER RAIL EXPANSION JOINTS. ONLY ONE CONTRACTION JOINT IS REQUIRED AT MIDPOINT OF BARRIER RAIL SEGMENTS LESS THAN 20 FEET IN LENGTH AND NO CONTRACTION JOINTS ARE REQUIRED FOR THOSE SEGMENTS LESS THAN 10 FEET IN LENGTH.

TRANSVERSE POST TENSIONING OF THE CORED SLAB UNITS SHALL BE DONE IN ACCORDANCE WITH THE STANDARD SPECIFICATIONS.

THE TRANSFER OF LOAD FROM THE ANCHORAGES TO THE CORED SLAB UNIT SHALL BE DONE WHEN THE CONCRETE HAS REACHED A COMPRESSIVE STRENGTH OF NOT LESS THAN THE REQUIRED STRENGTH SHOWN IN THE "CONCRETE RELEASE STRENGTH" TABLE.

FOR GROUT FOR STRUCTURES, SEE SPECIAL PROVISIONS.

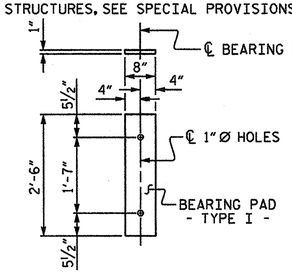


FIXED END
(TYPE I - 44 REQ'D)

## ELASTOMERIC BEARING DETAILS

ELASTOMER IN ALL BEARINGS SHALL BE 50 DUROMETER HARDNESS.

PROJECT NO. BD-5104M

NASH COUNTY

STATION: 14+10.00 -L-

SHEET 4 OF 4

STATE OF NORTH CAROLINA
DEPARTMENT OF TRANSPORTATION
RALEIGH

STANDARD
3'-0" X 1'-9"
PRESTRESSED CONCRETE
CORED SLAB UNIT
90° SKEW

NORTH CAROLINA PROFESSIONAL SEAL 14045 ENGINEER TIMOTHY L. COGGINS
12/14/12

| REVISIONS | | | | | | SHEET NO. |
|---|---|---|---|---|---|---|
| NO. | BY: | DATE: | NO. | BY: | DATE: | 14 |
| 1 | | | 3 | | | TOTAL SHEETS |
| 2 | | | 4 | | | 27 |

ASSEMBLED BY : REZA KOUCHEKI DATE : 11/26/12
CHECKED BY : B.L.GREEN DATE : 12/14/12
DRAWN BY : DGE 5/09
CHECKED BY : BCH 6/09
REV. 12/11 MAA/AAC

21-DEC-2012 12:08
S:\DPG1\Tim\Division 4 LIBR\BD-5104M\BD-5104M_SD_TS.dgn
tcoggins

STD. NO. 21"PCS3_33_90S

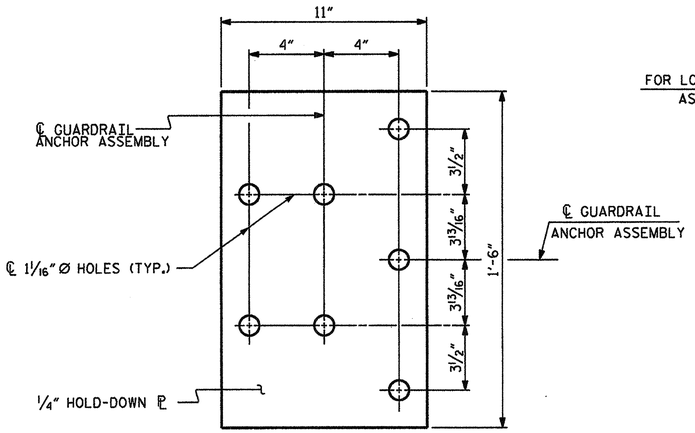


PLAN

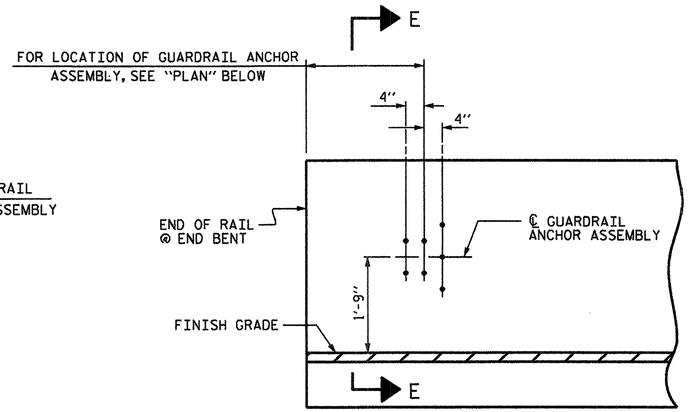


ELEVATION

## NOTES

THE GUARDRAIL ANCHOR ASSEMBLY SHALL CONSIST OF A 1/4" HOLD DOWN PLATE AND 7 - 7/8" Ø BOLTS WITH NUTS AND WASHERS.

THE HOLD-DOWN PLATE SHALL CONFORM TO AASHTO M270 GRADE 36. AFTER FABRICATION, THE HOLD-DOWN PLATE SHALL BE HOT-DIP GALVANIZED IN ACCORDANCE WITH AASHTO M111.

BOLTS SHALL CONFORM TO THE REQUIREMENTS OF ASTM A307 AND NUTS SHALL CONFORM TO THE REQUIREMENTS OF AASHTO M291. BOLTS, NUTS AND WASHERS SHALL BE GALVANIZED. (AT THE CONTRACTOR'S OPTION, STAINLESS STEEL BOLTS, NUTS AND WASHERS MAY BE USED AS AN ALTERNATE FOR THE 7/8" Ø GALVANIZED BOLTS, NUTS AND WASHERS. THEY SHALL CONFORM TO OR EXCEED THE MECHANICAL REQUIREMENTS OF ASTM A307. THE USE OF THIS ALTERNATE SHALL BE APPROVED BY THE ENGINEER.)

THE GUARDRAIL ANCHOR ASSEMBLY IS REQUIRED AT ALL POINTS WHERE APPROACH GUARDRAIL IS TO BE ATTACHED TO THE END OF BARRIER RAIL. FOR POINTS OF ATTACHMENT, SEE SKETCH.

AFTER INSTALLATION, THE EXPOSED THREAD OF THE BOLT SHALL BE BURRED WITH A SHARP POINTED TOOL.

THE COST OF THE GUARDRAIL ANCHOR ASSEMBLY SHALL BE INCLUDED IN THE UNIT CONTRACT PRICE BID FOR VERTICAL CONCRETE BARRIER RAIL.

THE VERTICAL REINFORCING BARS MAY BE SHIFTED SLIGHTLY IN THE VERTICAL CONCRETE BARRIER RAIL TO CLEAR ASSEMBLY BOLTS.

THE 1 1/4" Ø HOLES SHALL BE FORMED OR DRILLED WITH A CORE BIT. IMPACT TOOLS WILL NOT BE PERMITTED. ANY CONCRETE DAMAGED BY THIS WORK SHALL BE REPAIRED TO THE SATISFACTION OF THE ENGINEER.

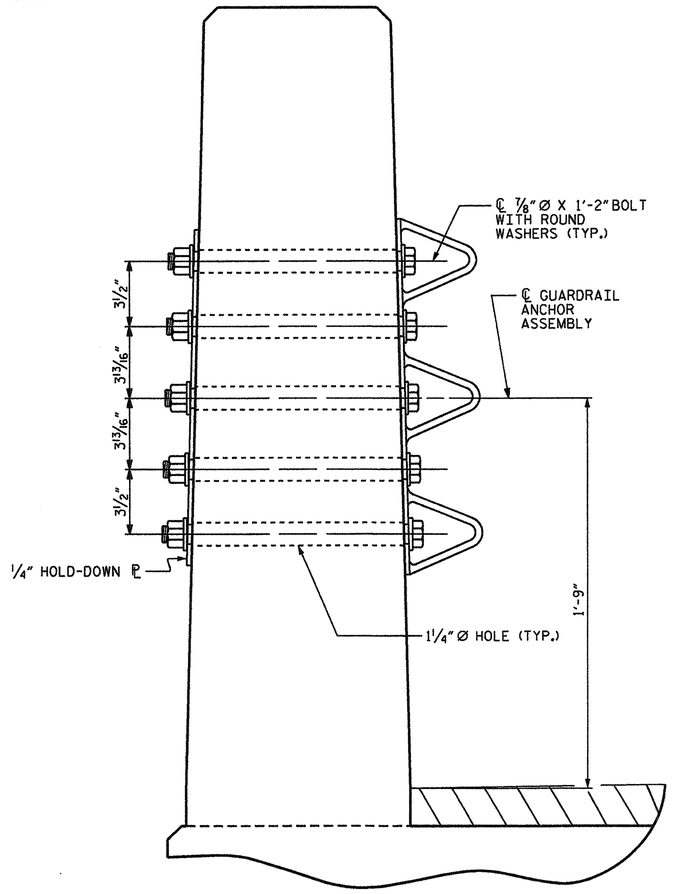


SECTION E-E

## GUARDRAIL ANCHOR ASSEMBLY DETAILS

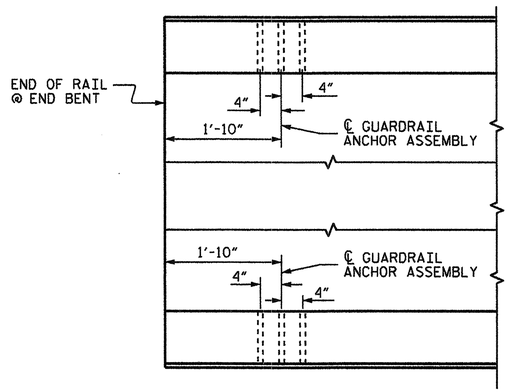


PLAN

## LOCATION OF ANCHORS FOR GUARDRAIL

END BENT #1 SHOWN, END BENT #2 SIMILAR.

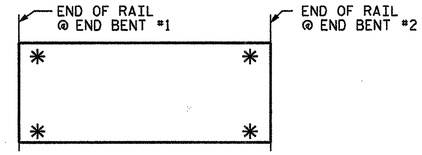


## SKETCH SHOWING POINTS OF ATTACHMENT

✳ DENOTES GUARDRAIL ANCHOR ASSEMBLY

PROJECT NO. BD-5104M

NASH COUNTY

STATION: 14+10.00 -L-

STATE OF NORTH CAROLINA
DEPARTMENT OF TRANSPORTATION
RALEIGH

STANDARD
GUARDRAIL ANCHORAGE FOR VERTICAL CONCRETE BARRIER RAIL

| REVISIONS | | | | | | SHEET NO. |
|---|---|---|---|---|---|---|
| NO. | BY: | DATE: | NO. | BY: | DATE: | 15 |
| 1 | | | 3 | | | TOTAL SHEETS |
| 2 | | | 4 | | | 27 |

NORTH CAROLINA PROFESSIONAL SEAL 14045 ENGINEER TIMOTHY V. COGGINS
12/21/12

| | | | |
|---|---|---|---|
| ASSEMBLED BY : REZA KOUCHEKI | DATE : 12-13-12 | ADDED 5/6/10 | |
| CHECKED BY : B.L.GREEN | DATE : 12-17-12 | REV. 10/1/11 | MAA/GM |
| DRAWN BY : MAA 5/10 | | REV. 12/5/11 | MAA/GM |
| CHECKED BY : GM 5/10 | | | |

21-DEC-2012 12:06
S:\DPG\\Tim\Division 4 LIBR\BD-5104M\BD-5104M_SD_TS.dgn
tcoggins

(SHT 1) STD. NO. GRA3

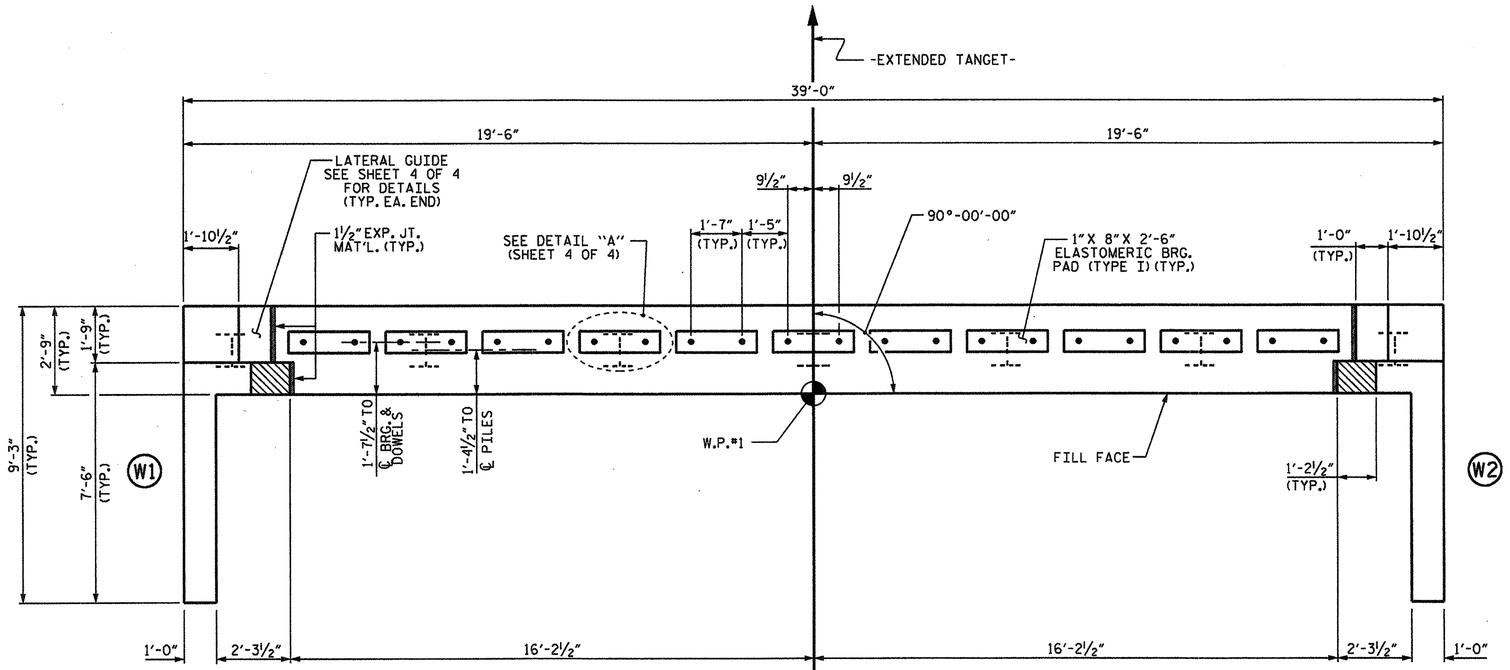


## PLAN

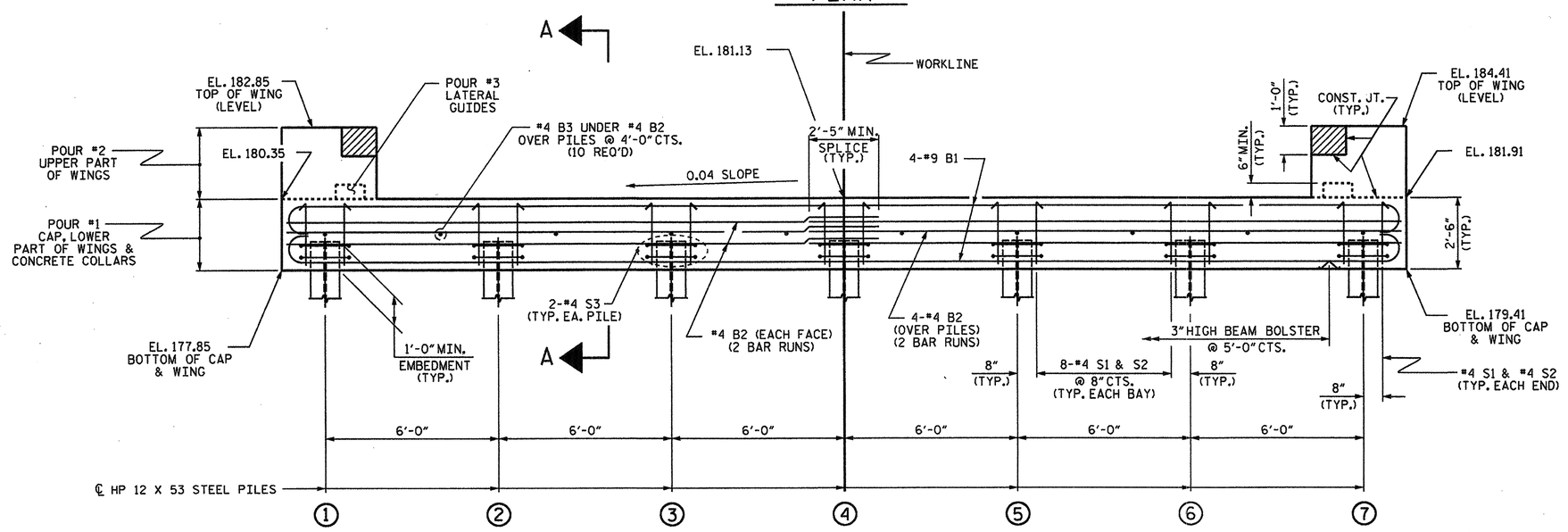


## ELEVATION

WINGS NOT SHOWN FOR CLARITY.
FOR SECTION A-A, SEE SHEET 4 OF 4.
CONCRETE COLLARS FOR STEEL PILES NOT SHOWN IN PLAN AND ELEVATION VIEWS FOR CLARITY.
SEE "CORROSION PROTECTION FOR STEEL PILES DETAIL", SHEET 4 OF 4.

## NOTES

STIRRUPS IN CAP MAY BE SHIFTED AS NECESSARY TO CLEAR DOWELS.

THE LATERAL GUIDES ARE NOT TO BE POURED UNTIL AFTER THE CORED SLAB UNITS ARE IN PLACE.

THE CONCRETE IN THE SHADED AREA OF THE WING SHALL BE POURED AFTER THE VERTICAL CONCRETE BARRIER RAIL IS CAST IF SLIP FORMING IS USED.

FOR PILE SPLICE DETAILS, SEE SHEET 4 OF 4.

FOR WING DETAILS, SEE SHEET 3 OF 4.

THE CONTRACTOR HAS THE OPTION TO OMIT THE LATERAL GUIDE IF APPROVED BY THE ENGINEER.

| TOP OF PILE ELEVATIONS | |
|---|---|
| ① | 178.93 |
| ② | 179.17 |
| ③ | 179.41 |
| ④ | 179.65 |
| ⑤ | 179.89 |
| ⑥ | 180.13 |
| ⑦ | 180.37 |

PROJECT NO. BD-5104M
NASH COUNTY
STATION: 14+10.00 -L-

SHEET 1 OF 4

STATE OF NORTH CAROLINA
DEPARTMENT OF TRANSPORTATION
RALEIGH

SUBSTRUCTURE

END BENT No. 1

| REVISIONS | | | | | | SHEET NO. |
|---|---|---|---|---|---|---|
| NO. | BY: | DATE: | NO. | BY: | DATE: | 16 |
| 1 | | | 3 | | | TOTAL SHEETS |
| 2 | | | 4 | | | 27 |

NORTH CAROLINA PROFESSIONAL SEAL 14045 ENGINEER TIMOTHY U. COGGINS
12/21/12

| | |
|---|---|
| ASSEMBLED BY : REZA KOUCHEKI | DATE : 11/26/12 |
| CHECKED BY : B.L.GREEN | DATE : 12/14/12 |
| DRAWN BY : DGE 02/10 | |
| CHECKED BY : MKT 02/10 | |

21-DEC-2012 12:06
S:\DPG\Tim\Division 4 LIBR\BD-5104M\BD-5104M_SD_TS.dgn
tcoggins

STD. NO. EB_33_90S

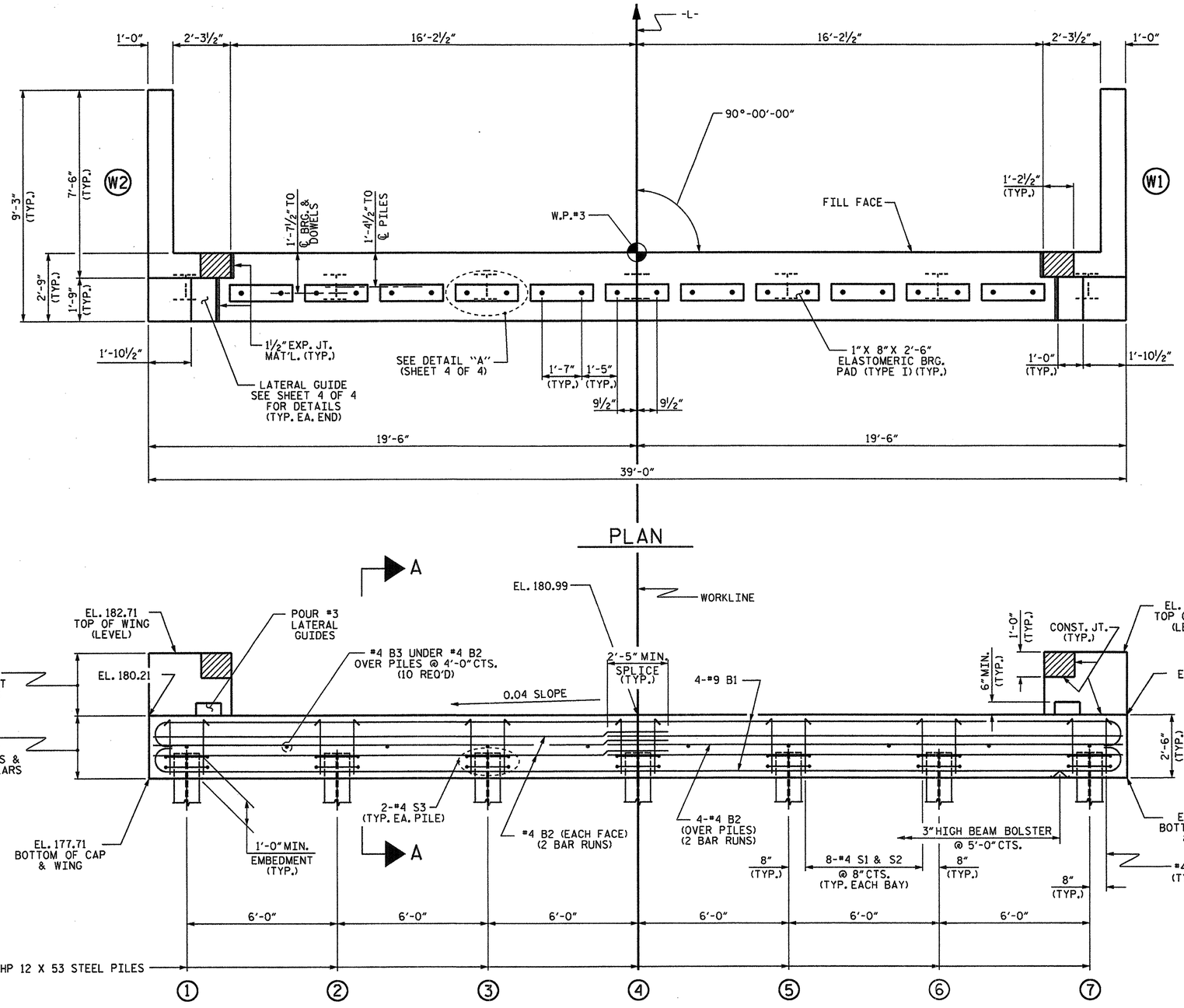


PLAN




ELEVATION

WINGS NOT SHOWN FOR CLARITY.
FOR SECTION A-A, SEE SHEET 4 OF 4.
CONCRETE COLLARS FOR STEEL PILES NOT SHOWN IN PLAN AND ELEVATION VIEWS FOR CLARITY.
SEE "CORROSION PROTECTION FOR STEEL PILES DETAIL", SHEET 4 OF 4.

## NOTES

STIRRUPS IN CAP MAY BE SHIFTED AS NECESSARY TO CLEAR DOWELS.

THE LATERAL GUIDES ARE NOT TO BE POURED UNTIL AFTER THE CORED SLAB UNITS ARE IN PLACE.

THE CONCRETE IN THE SHADED AREA OF THE WING SHALL BE POURED AFTER THE VERTICAL CONCRETE BARRIER RAIL IS CAST IF SLIP FORMING IS USED.

FOR PILE SPLICE DETAILS, SEE SHEET 4 OF 4.

FOR WING DETAILS, SEE SHEET 3 OF 4.

THE CONTRACTOR HAS THE OPTION TO OMIT THE LATERAL GUIDE IF APPROVED BY THE ENGINEER.

| TOP OF PILE ELEVATIONS | |
|---|---|
| ① | 178.79 |
| ② | 179.03 |
| ③ | 179.27 |
| ④ | 179.51 |
| ⑤ | 179.75 |
| ⑥ | 179.99 |
| ⑦ | 180.23 |

NORTH CAROLINA PROFESSIONAL SEAL 14045 ENGINEER TIMOTHY L. COGGINS
12/21/12

PROJECT NO. BD-5104M
NASH COUNTY
STATION: 14+10.00 -L-
SHEET 2 OF 4

STATE OF NORTH CAROLINA
DEPARTMENT OF TRANSPORTATION
RALEIGH

SUBSTRUCTURE

END BENT No. 2

| REVISIONS | | | | | | SHEET NO. |
|---|---|---|---|---|---|---|
| NO. | BY: | DATE: | NO. | BY: | DATE: | 17 |
| 1 | | | 3 | | | TOTAL SHEETS |
| 2 | | | 4 | | | 27 |

ASSEMBLED BY : REZA KOUCHEKI DATE : 11/26/12
CHECKED BY : B.L.GREEN DATE : 12/14/12
DRAWN BY : DGE 02/10
CHECKED BY : MKT 02/10

21-DEC-2012 12:05
S:\DPG1\Tim\Division 4 LIBR\BD-5104M\BD-5104M_SD_TS.dgn
tcoggins

STD. NO. EB_33_90S

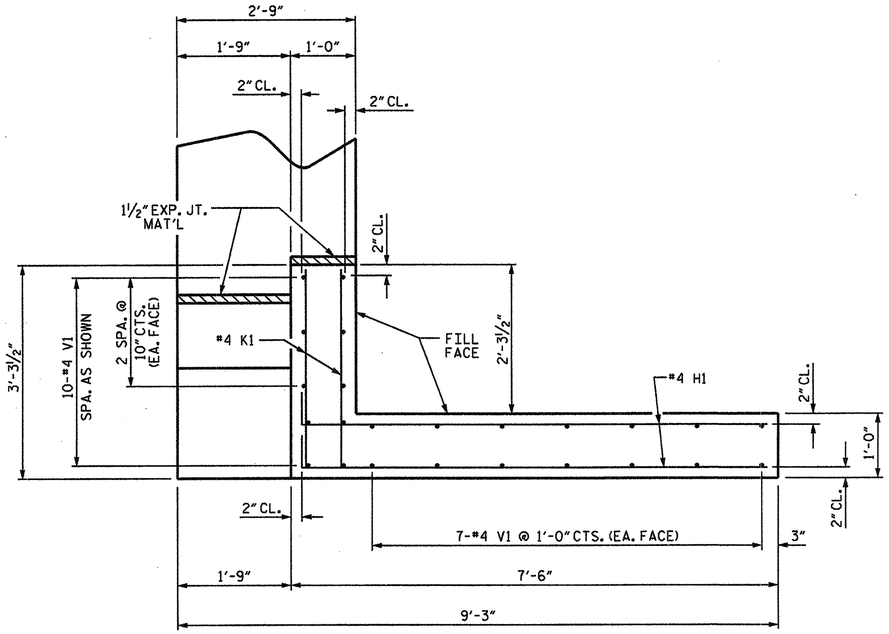


PLAN OF WING (W1)

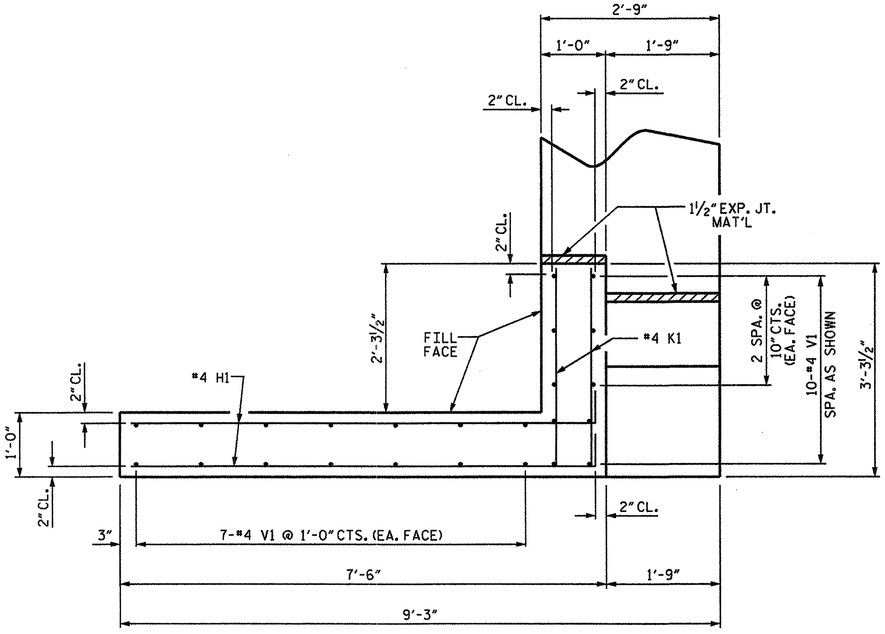


PLAN OF WING (W2)

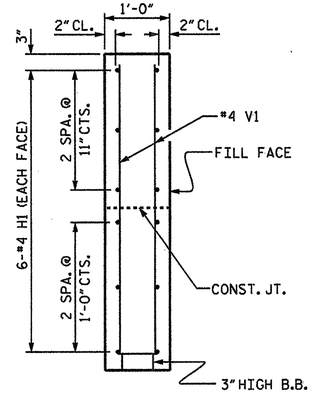


SECTION X-X

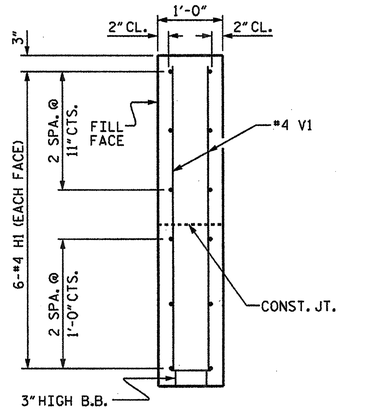


SECTION Y-Y

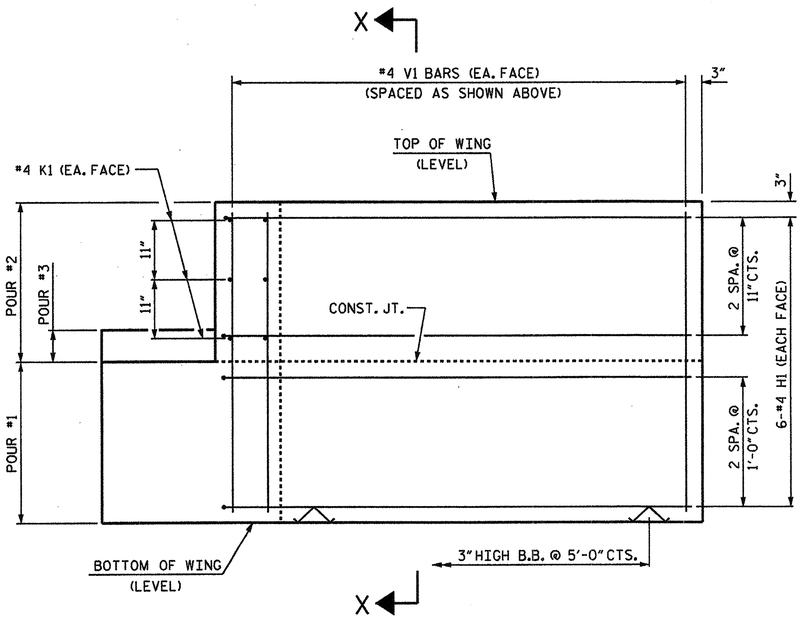


ELEVATION OF WING (W1)

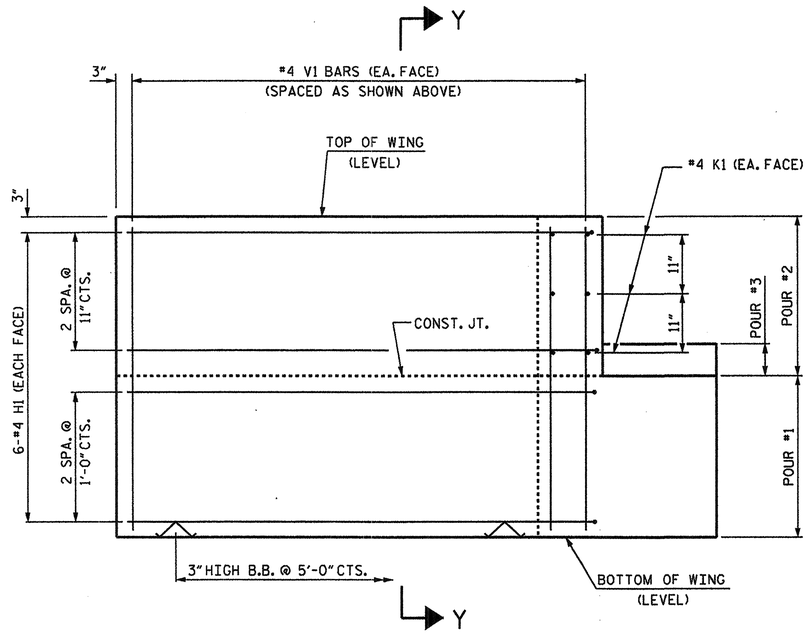


ELEVATION OF WING (W2)

WING DETAILS

| | |
|---|---|
| ASSEMBLED BY : REZA KOUCHEKI | DATE : 11/26/12 |
| CHECKED BY : B.L.GREEN | DATE : 12/14/12 |
| DRAWN BY : DGE 02/10 | |
| CHECKED BY : MKT 02/10 | |

21-DEC-2012 12:05
S:\DPG\Tim\Division 4 LIBR\BD-5104M\BD-5104M_SO_TS.dgn
rcoggins

NORTH CAROLINA PROFESSIONAL SEAL 14045 ENGINEER TIMOTHY M. COGGINS
12/21/12

PROJECT NO. BD-5104M
NASH COUNTY
STATION: 14+10.00 -L-

SHEET 3 OF 4

STATE OF NORTH CAROLINA
DEPARTMENT OF TRANSPORTATION
RALEIGH

SUBSTRUCTURE

END BENT
WING DETAILS

| REVISIONS | | | | | | SHEET NO. |
|---|---|---|---|---|---|---|
| NO. | BY: | DATE: | NO. | BY: | DATE: | 18 |
| 1 | | | 3 | | | TOTAL SHEETS |
| 2 | | | 4 | | | 27 |

STD. NO. EB_33_90S

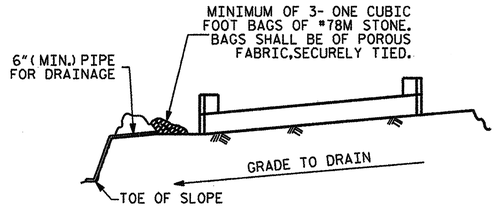


BAGGED STONE AND PIPE SHALL BE PLACED IMMEDIATELY AFTER COMPLETION OF END BENT EXCAVATION. PIPE MAY BE EITHER CONCRETE, CORRUGATED STEEL, CORRUGATED ALUMINUM ALLOY, OR CORRUGATED PLASTIC. PERFORATED PIPE WILL NOT BE ALLOWED.

BAGGED STONE SHALL REMAIN IN PLACE UNTIL THE ENGINEER DIRECTS THAT IT BE REMOVED. THE CONTRACTOR SHALL REMOVE AND DISPOSE OF SILT ACCUMULATIONS AT BAGGED STONE WHEN SO DIRECTED BY THE ENGINEER. BAGS SHALL BE REMOVED AND REPLACED WHENEVER THE ENGINEER DETERMINES THAT THEY HAVE DETERIORATED AND LOST THEIR EFFECTIVENESS.

NO SEPARATE PAYMENT WILL BE MADE FOR THIS WORK AND THE ENTIRE COST OF THIS WORK SHALL BE INCLUDED IN THE UNIT CONTRACT PRICE BID FOR THE SEVERAL PAY ITEMS.

## TEMPORARY DRAINAGE AT END BENT

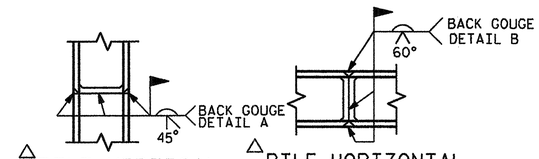


△PILE VERTICAL

△PILE HORIZONTAL OR VERTICAL

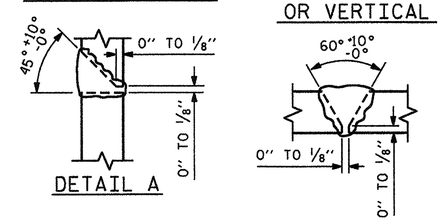


△POSITION OF PILE DURING WELDING.

## PILE SPLICE DETAILS

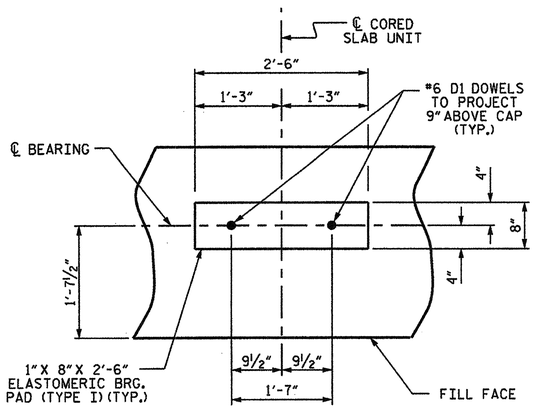


DETAIL "A"

(END BENT No. 1 SHOWN, END BENT No. 2 SIMILAR BY ROTATION)

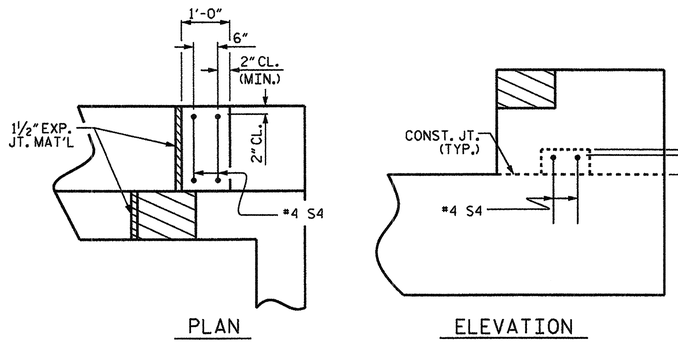


PLAN ELEVATION

## LATERAL GUIDE DETAILS

(RIGHT LATERAL GUIDE SHOWN, LEFT END SIMILAR)

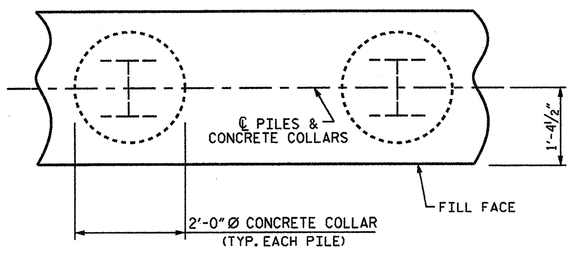


PLAN

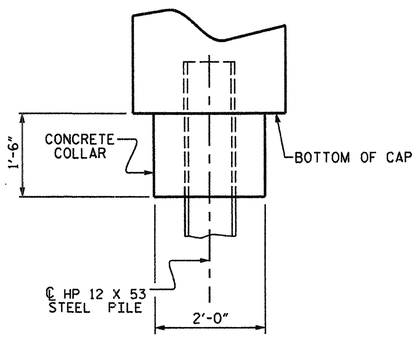


ELEVATION

## CORROSION PROTECTION FOR STEEL PILES DETAIL

(END BENT No. 1 SHOWN, END BENT No. 2 SIMILAR BY ROTATION)

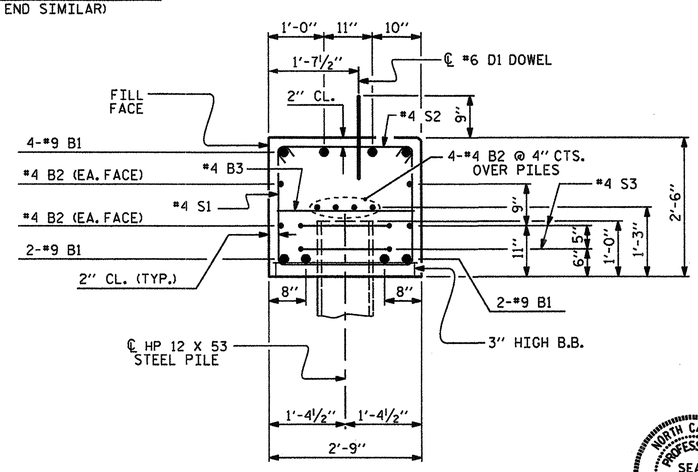


## SECTION A-A

(CONCRETE COLLAR NOT SHOWN FOR CLARITY. SEE "CORROSION PROTECTION FOR STEEL PILES DETAIL.")

NORTH CAROLINA PROFESSIONAL SEAL 14045 ENGINEER TIMOTHY K. COGGINS

Timothy K. Coggins 12/21/12

## BAR TYPES

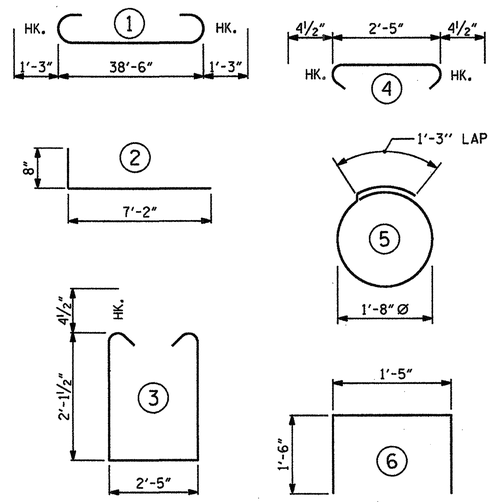


ALL BAR DIMENSIONS ARE OUT TO OUT.

| END BENT No. 1 | END BENT No. 2 |
|---|---|
| HP 12 X 53 STEEL PILES | HP 12 X 53 STEEL PILES |
| NO: 7 LIN. FT.= 105 | NO: 7 LIN. FT.= 105 |
| STEEL PILE POINTS EA. 7 | STEEL PILE POINTS EA. 7 |

## BILL OF MATERIAL FOR ONE END BENT

| BAR | NO. | SIZE | TYPE | LENGTH | WEIGHT |
|---|---|---|---|---|---|
| B1 | 8 | #9 | 1 | 41'-0" | 1115 |
| B2 | 16 | #4 | STR | 20'-7" | 220 |
| B3 | 10 | #4 | STR | 2'-5" | 16 |
| D1 | 22 | #6 | STR | 1'-6" | 50 |
| H1 | 24 | #4 | 2 | 7'-10" | 126 |
| K1 | 12 | #4 | STR | 2'-11" | 23 |
| S1 | 50 | #4 | 3 | 7'-5" | 248 |
| S2 | 50 | #4 | 4 | 3'-2" | 106 |
| S3 | 14 | #4 | 5 | 6'-6" | 61 |
| S4 | 4 | #4 | 6 | 4'-5" | 12 |
| V1 | 48 | #4 | STR | 4'-8" | 150 |

REINFORCING STEEL (FOR ONE END BENT) 2127 LBS.

CLASS A CONCRETE BREAKDOWN (FOR ONE END BENT)

| | | |
|---|---|---|
| POUR #1 | CAP, LOWER PART OF WINGS & COLLARS | 12.4 C.Y. |
| POUR #2 | UPPER PART OF WINGS | 1.8 C.Y. |
| POUR #3 | LATERAL GUIDES | 0.1 C.Y. |
| TOTAL CLASS A CONCRETE | | 14.3 C.Y. |

PROJECT NO. BD-5104M

NASH COUNTY

STATION: 14+10.00 -L-

SHEET 4 OF 4

STATE OF NORTH CAROLINA
DEPARTMENT OF TRANSPORTATION
RALEIGH

SUBSTRUCTURE

END BENT No. 1 & 2 DETAILS

| REVISIONS | | | | | | SHEET NO. |
|---|---|---|---|---|---|---|
| NO. | BY: | DATE: | NO. | BY: | DATE: | 19 |
| 1 | | | 3 | | | TOTAL SHEETS |
| 2 | | | 4 | | | 27 |

| | |
|---|---|
| ASSEMBLED BY : REZA KOUCHEKI | DATE : 11/26/12 |
| CHECKED BY : B.L.GREEN | DATE : 12/14/12 |
| DRAWN BY : DGE 02/10 | |
| CHECKED BY : MKT 02/10 | |

21-DEC-2012 12:05
S:\DPG\Tim\Division 4 LIBR\BD-5104M\BD-5104M_SD_TS.dgn
tcoggins

STD. NO. EB_33_90S

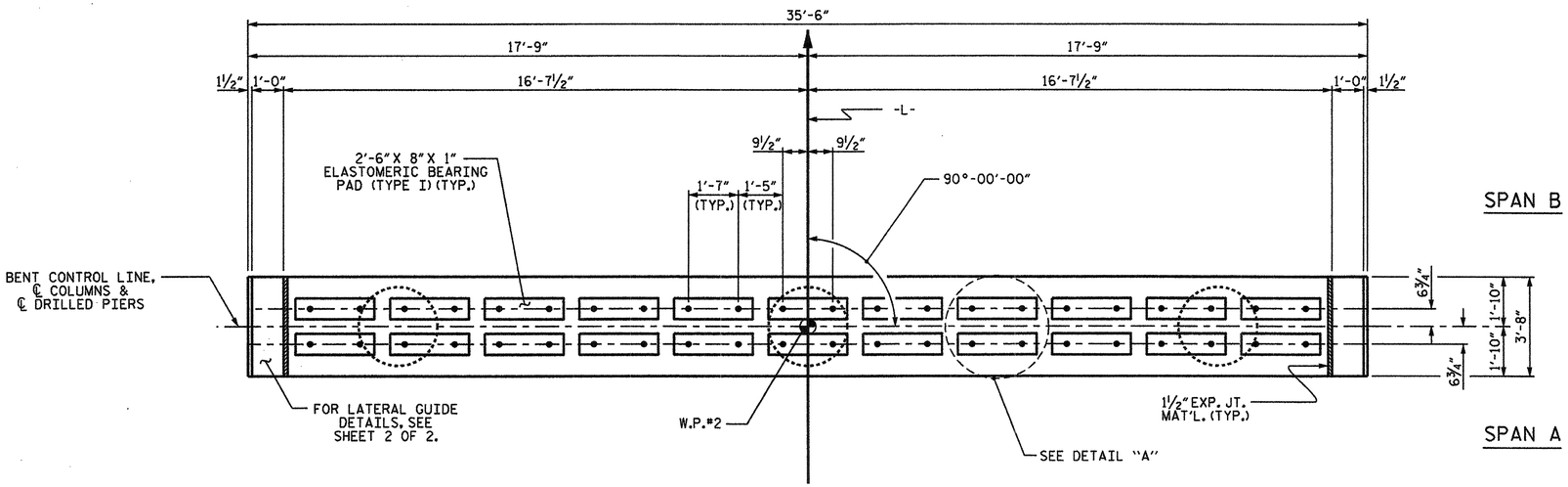


## PLAN

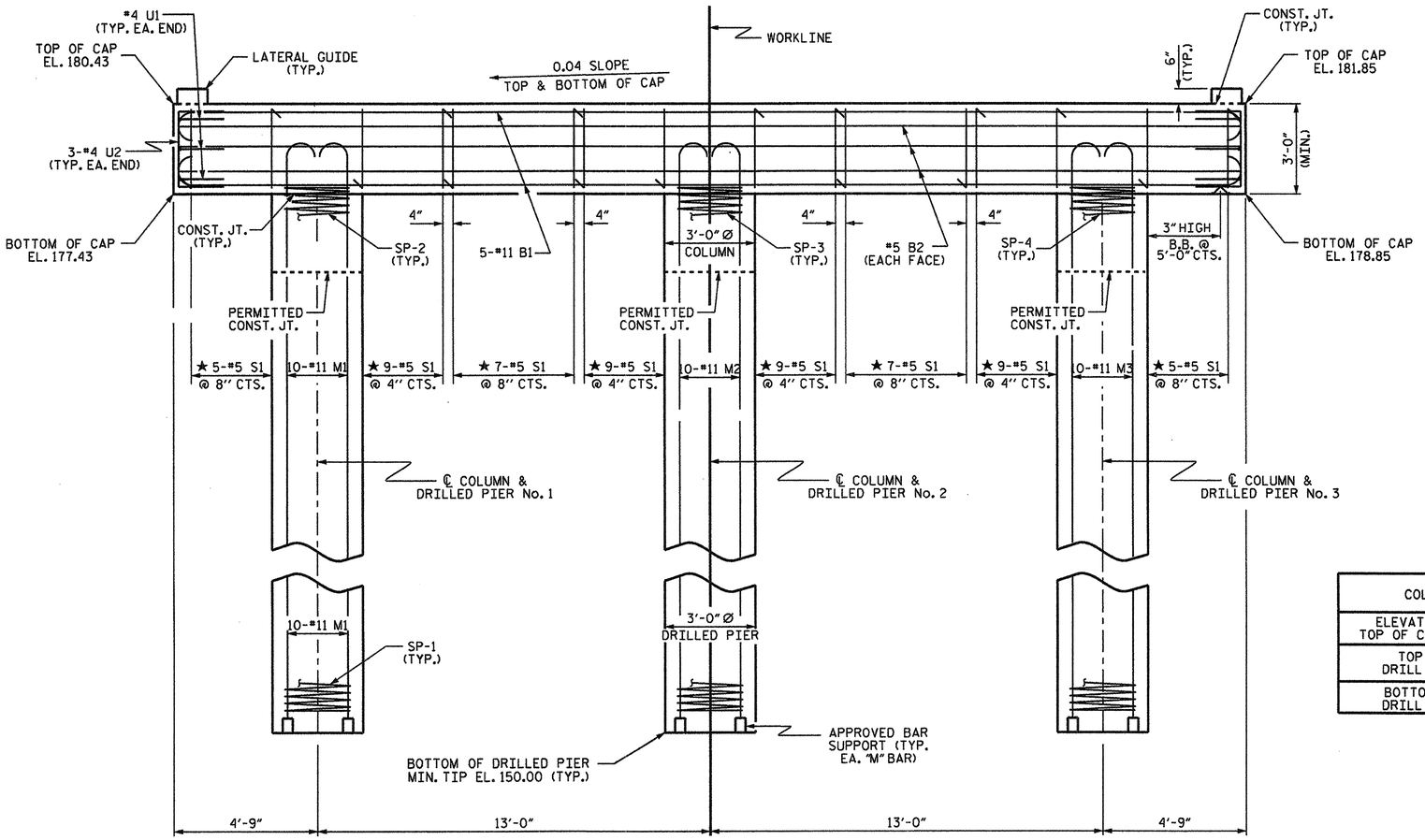


## ELEVATION

DIMENSIONS & REINFORCING STEEL ARE TYPICAL FOR EACH COLUMN & DRILLED PIER UNLESS OTHERWISE NOTED.

## NOTES

STIRRUPS IN CAP MAY BE SHIFTED AS NECESSARY TO CLEAR DOWELS.

HOOKS ON "M" BARS MAY BE TURNED AS NECESSARY FOR PLACING REINFORCING STEEL.

FOR DRILLED PIERS, SEE SECTION 411 OF THE STANDARD SPECIFICATIONS.

ALL STEEL IN THE DRILLED PIERS IS INCLUDED IN THE PAY ITEMS FOR "REINFORCING STEEL" AND "SPIRAL COLUMN REINFORCING STEEL."

THE LATERAL GUIDES ARE NOT TO BE POURED UNTIL AFTER THE CORED SLAB UNITS ARE IN PLACE.

★ INVERT ALTERNATE STIRRUPS.

DRILLED PIERS SHALL BE TERMINATED ONE FOOT ± ABOVE NORMAL WATER SURFACE ELEVATION FOR SHAFTS LOCATED IN WATER.

THE CONTRACTOR'S ATTENTION IS CALLED TO THE FACT THAT THE LONGITUDINAL REINFORCEMENT FOR DRILLED PIERS IS DETAILED WITH 3 FEET OF EXTRA LENGTH.

THE CONTRACTOR HAS THE OPTION TO OMIT THE LATERAL GUIDE IF APPROVED BY THE ENGINEER.

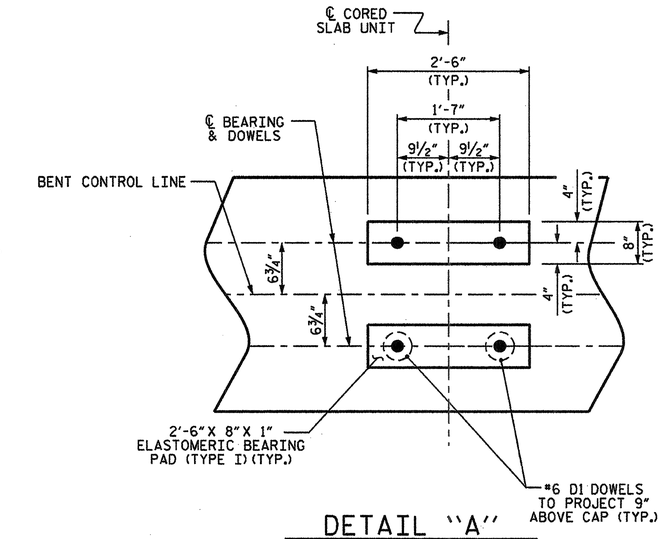


## DETAIL "A"

(DIMENSIONS ARE TYPICAL EACH BEARING)

| COLUMN | 1 | 2 | 3 |
|---|---|---|---|
| ELEVATION TOP OF COLUMN | 177.62 | 178.14 | 178.66 |
| TOP OF DRILL PIER | 176.00 | 176.00 | 176.00 |
| BOTTOM OF DRILL PIER | 150.00 | 150.00 | 150.00 |

PROJECT NO. BD-5104M

NASH COUNTY

STATION: 14+10.00 -L-

SHEET 1 OF 2

STATE OF NORTH CAROLINA
DEPARTMENT OF TRANSPORTATION
RALEIGH

SUBSTRUCTURE

BENT No. 1

NORTH CAROLINA PROFESSIONAL SEAL 14045 ENGINEER TIMOTHY M. COGGINS
12/21/12

| ASSEMBLED BY : REZA KOUCHEKI | DATE : 11/27/12 |
|---|---|
| CHECKED BY : B.L.GREEN | DATE : 12/14/12 |
| DRAWN BY : DGE 03/10 | |
| CHECKED BY : MKT 03/10 | |

| REVISIONS | | | | | | SHEET NO. |
|---|---|---|---|---|---|---|
| NO. | BY: | DATE: | NO. | BY: | DATE: | 20 |
| 1 | | | 3 | | | TOTAL SHEETS |
| 2 | | | 4 | | | 27 |

21-DEC-2012 14:13
S:\DPGI\Tim\Division 4 LIBR\BD-5104M\BD-5104M_SD_TS.dgn
tcoggins

STD. NO. DP_BT_33_90S_<50'

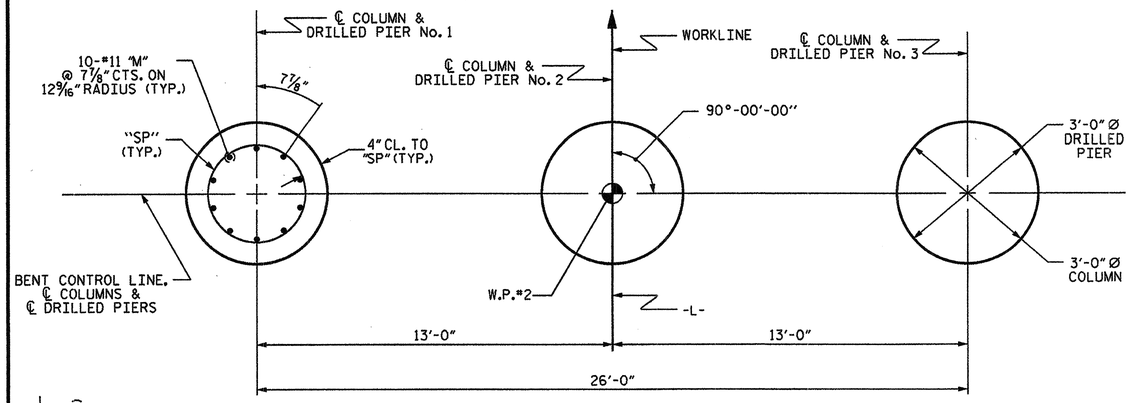


## PLAN OF DRILLED PIERS & COLUMNS

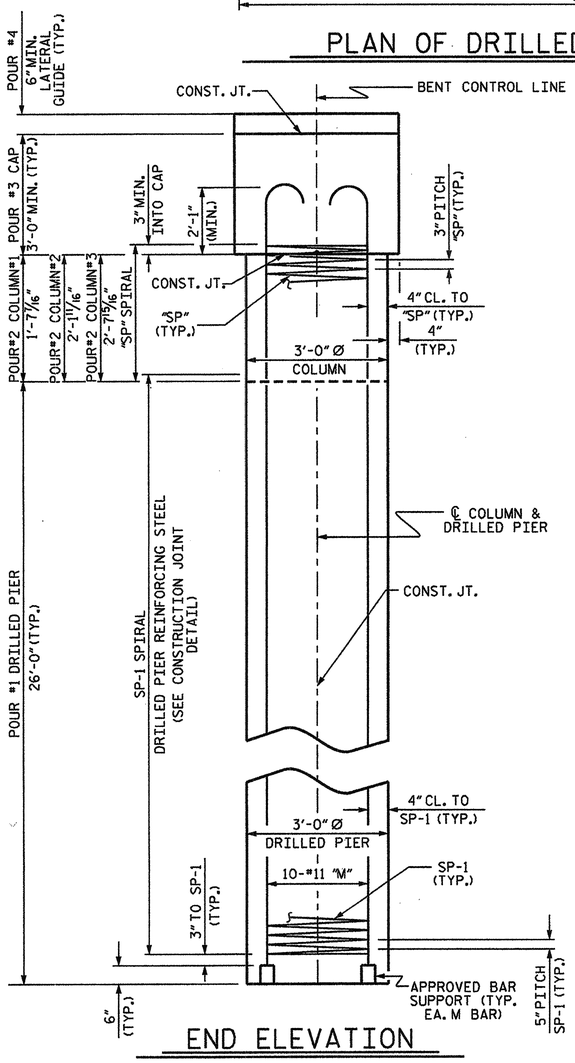


## END ELEVATION

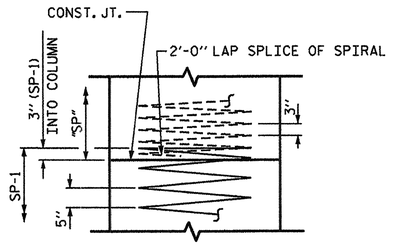


## CONSTRUCTION JOINT DETAIL

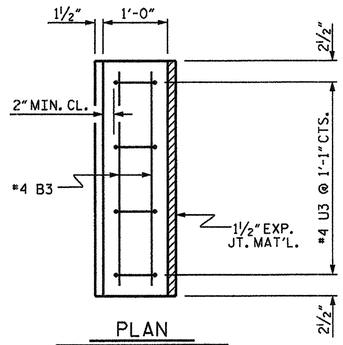


PLAN

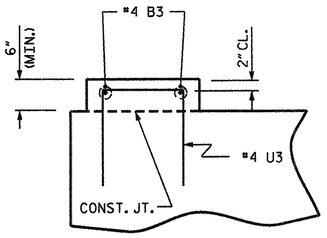


ELEVATION

## LATERAL GUIDE DETAILS

(LEFT LATERAL GUIDE SHOWN, RIGHT SIDE SIMILAR)

## BAR TYPES

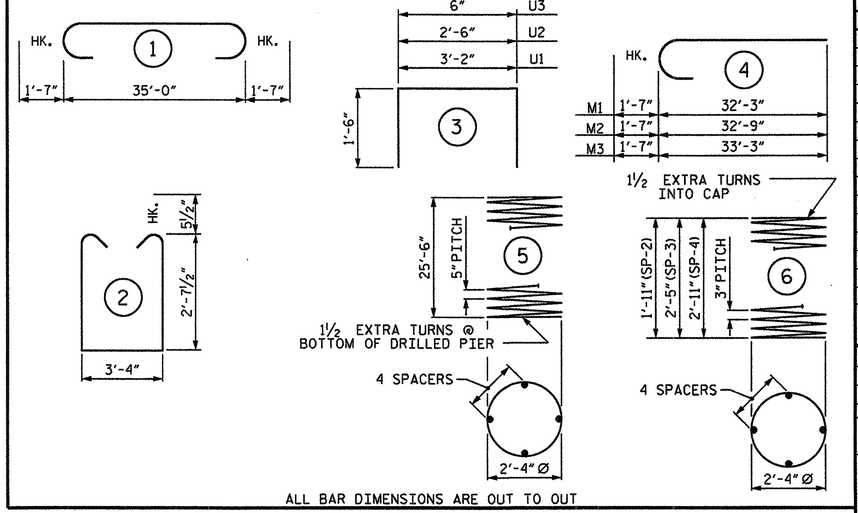


ALL BAR DIMENSIONS ARE OUT TO OUT

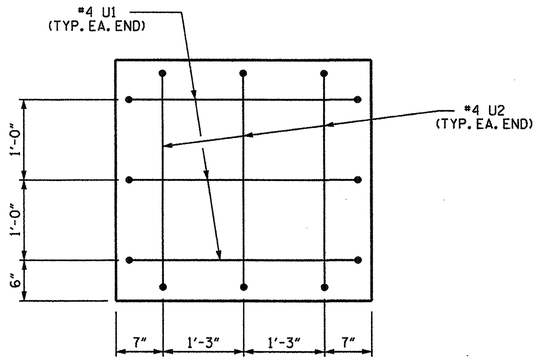


## END OF CAP VIEW

(TYPICAL BOTH ENDS)

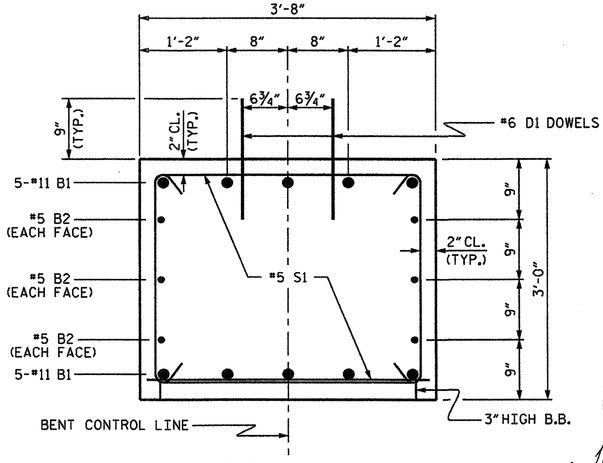


## SECTION THRU CAP

## BILL OF MATERIAL

### FOR ONE BENT

| BAR | NO. | SIZE | TYPE | LENGTH | WEIGHT |
|---|---|---|---|---|---|
| B1 | 10 | #11 | 1 | 38'-2" | 2028 |
| B2 | 6 | #5 | STR | 35'-2" | 220 |
| B3 | 4 | #4 | STR | 3'-4" | 9 |
| | | | | | |
| D1 | 44 | #6 | STR | 1'-6" | 99 |
| | | | | | |
| M1 | 10 | #11 | 4 | 33'-10" | 1798 |
| M2 | 10 | #11 | 4 | 34'-4" | 1824 |
| M3 | 10 | #11 | 4 | 34'-10" | 1851 |
| | | | | | |
| S1 | 60 | #5 | 2 | 9'-6" | 595 |
| | | | | | |
| U1 | 6 | #4 | 3 | 6'-2" | 25 |
| U2 | 6 | #4 | 3 | 5'-6" | 22 |
| U3 | 8 | #4 | 3 | 3'-6" | 19 |

REINFORCING STEEL (FOR ONE BENT) 8490 LBS.

| | | | | | |
|---|---|---|---|---|---|
| SP-1 | 3 | * | 5 | 450'-2" | 1409 |
| SP-2 | 1 | ** | 6 | 66'-1" | 44 |
| SP-3 | 1 | ** | 6 | 80'-6" | 54 |
| SP-4 | 1 | ** | 6 | 95'-0" | 63 |

SPIRAL COLUMN REINFORCING STEEL (FOR ONE BENT) 1570 LBS.

* THE SP-1 SPIRAL REINFORCING STEEL SHALL BE W31 OR D-31 COLD DRAWN WIRE OR #5 PLAIN OR DEFORMED BAR

** THE SP-2 SPIRAL REINFORCING STEEL SHALL BE W20 OR D-20 COLD DRAWN WIRE OR #4 PLAIN OR DEFORMED BAR

### CLASS A CONCRETE BREAKDOWN (FOR ONE BENT)

| | |
|---|---|
| POUR #2 (COLUMNS) | 1.7 C.Y. |
| POUR #3 (CAP) | 14.5 C.Y. |
| POUR #4 (LATERAL GUIDE) | 0.1 C.Y. |
| TOTAL CLASS A CONCRETE | 16.3 C.Y. |

### DRILLED PIERS: (FOR ONE BENT)

| | |
|---|---|
| DRILLED PIER CONCRETE POUR #1 (DRILLED PIERS) | 20.4 C.Y. |
| 3'-0" Ø DRILLED PIER | 78 LIN. FT. |
| PERMANENT STEEL CASING FOR 3'-0" Ø DRILLED PIER | 37.5 LIN. FT. |
| CSL TUBES | 330 LIN. FT. |
| SID INSPECTIONS | 1 EACH |
| SPT INSPECTIONS | 3 EACH |

PROJECT NO. BD-5104M

NASH COUNTY

STATION: 14+10.00-L-

SHEET 2 OF 2

STATE OF NORTH CAROLINA
DEPARTMENT OF TRANSPORTATION
RALEIGH

SUBSTRUCTURE

BENT No. 1

NORTH CAROLINA PROFESSIONAL SEAL 14045 ENGINEER TIMOTHY W. COGGINS

12/21/12

| ASSEMBLED BY : REZA KOUCHEKI | DATE : 12/13/12 |
|---|---|
| CHECKED BY : B.L.GREEN | DATE : 12/14/12 |
| DRAWN BY : DGE 03/10 | |
| CHECKED BY : MKT 03/10 | |

| REVISIONS | | | | | | SHEET NO. |
|---|---|---|---|---|---|---|
| NO. | BY: | DATE: | NO. | BY: | DATE: | 21 |
| 1 | | | 3 | | | TOTAL SHEETS |
| 2 | | | 4 | | | 27 |

21-DEC-2012 14:13
S:\DPG\Tim\Division 4 LIBR\BD-5104M\BD-5104M_SD_TS.dgn
tcoggins

STD. NO. DP_BT_33_90S_<50'

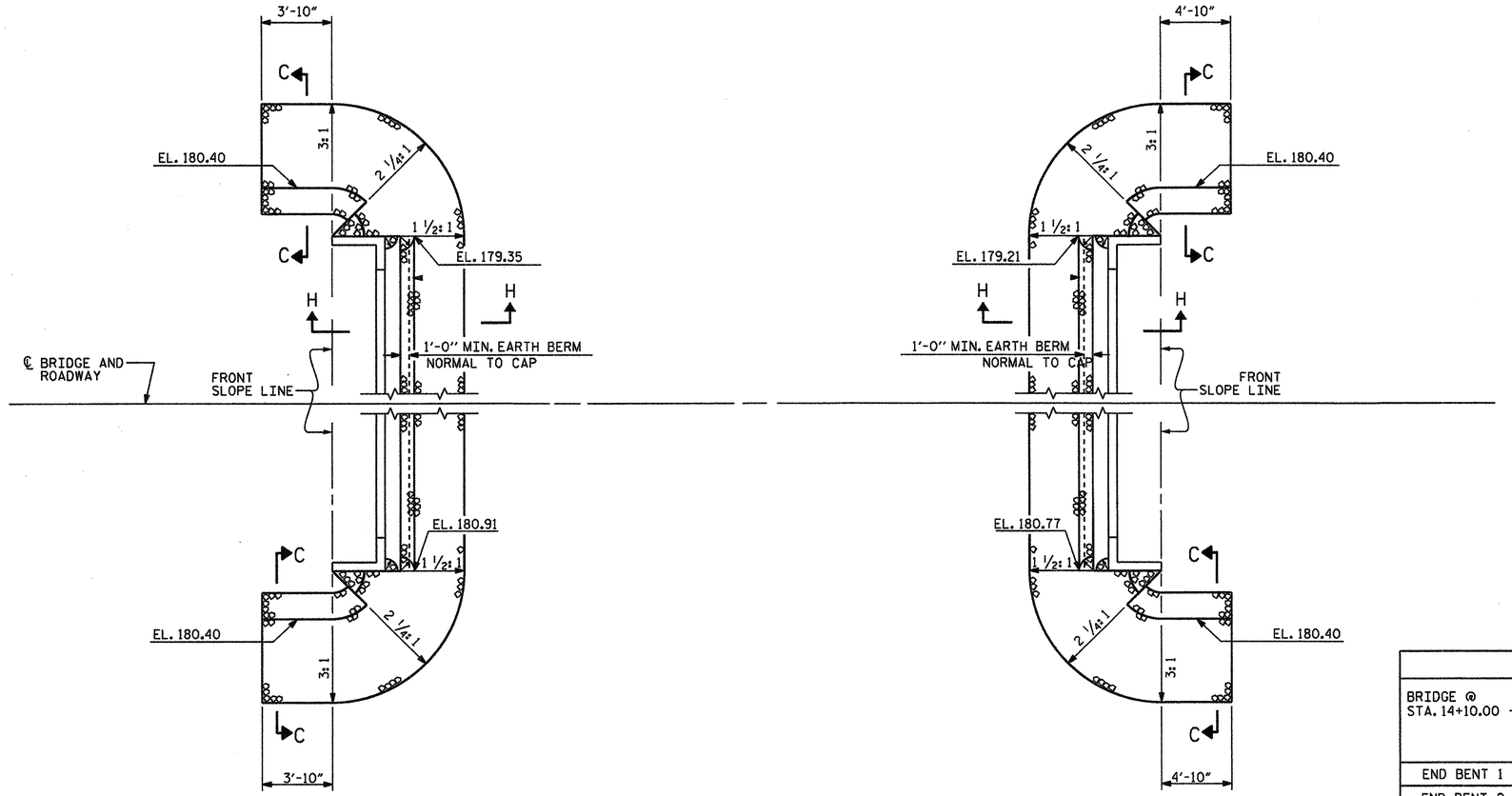


PLAN

NOTES :

FOR BERM WIDTH DIMENSIONS, SEE GENERAL DRAWING.

## ESTIMATED QUANTITIES

| BRIDGE @ STA. 14+10.00 -L- | RIP RAP CLASS II (2'-0" THICK) | GEOTEXTILE FOR DRAINAGE |
|---|---|---|
| | TONS | SQUARE YARDS |
| END BENT 1 | 142 | 158 |
| END BENT 2 | 132 | 147 |

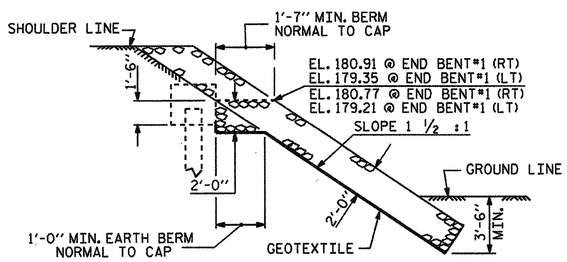


SECTION H-H

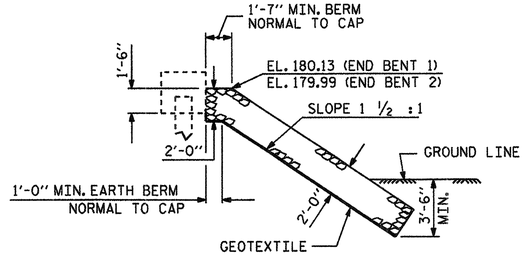


℄ SECTION
BERM RIP RAPPED

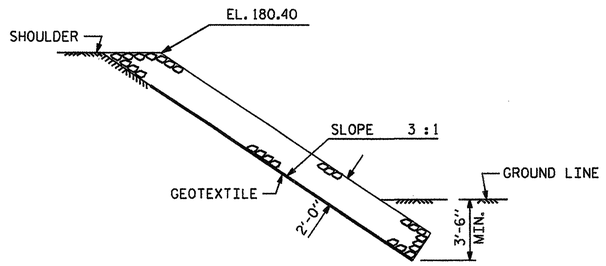


SECTION C-C

PROJECT NO. BD-5104M

NASH COUNTY

STATION: 14+10.00 -L-

STATE OF NORTH CAROLINA
DEPARTMENT OF TRANSPORTATION
RALEIGH

STANDARD

# RIP RAP DETAILS

NORTH CAROLINA PROFESSIONAL SEAL 14045 ENGINEER TIMOTHY L. COGGINS
12/21/12

| ASSEMBLED BY : REZA KOUCHEKI | DATE : 12/13/12 |
|---|---|
| CHECKED BY : B.L.GREEN | DATE : 12/14/12 |
| DRAWN BY : REK 1/84 | REV. 5/1/06R TLA/GM |
| CHECKED BY : RDU 1/84 | REV. 10/1/11 MAA/GM |
| | REV. 12/21/11 MAA/GM |

| REVISIONS | | | | | | SHEET NO. |
|---|---|---|---|---|---|---|
| NO. | BY: | DATE: | NO. | BY: | DATE: | 22 |
| 1 | | | 3 | | | TOTAL SHEETS |
| 2 | | | 4 | | | 27 |

21-DEC-2012 12:28
S:\DPG1\Tim\Division 4 LIBR\BD-5104M\BD-5104M_SD_TS.dgn
tcoggins

STD. NO. RR1 (Sht 2)

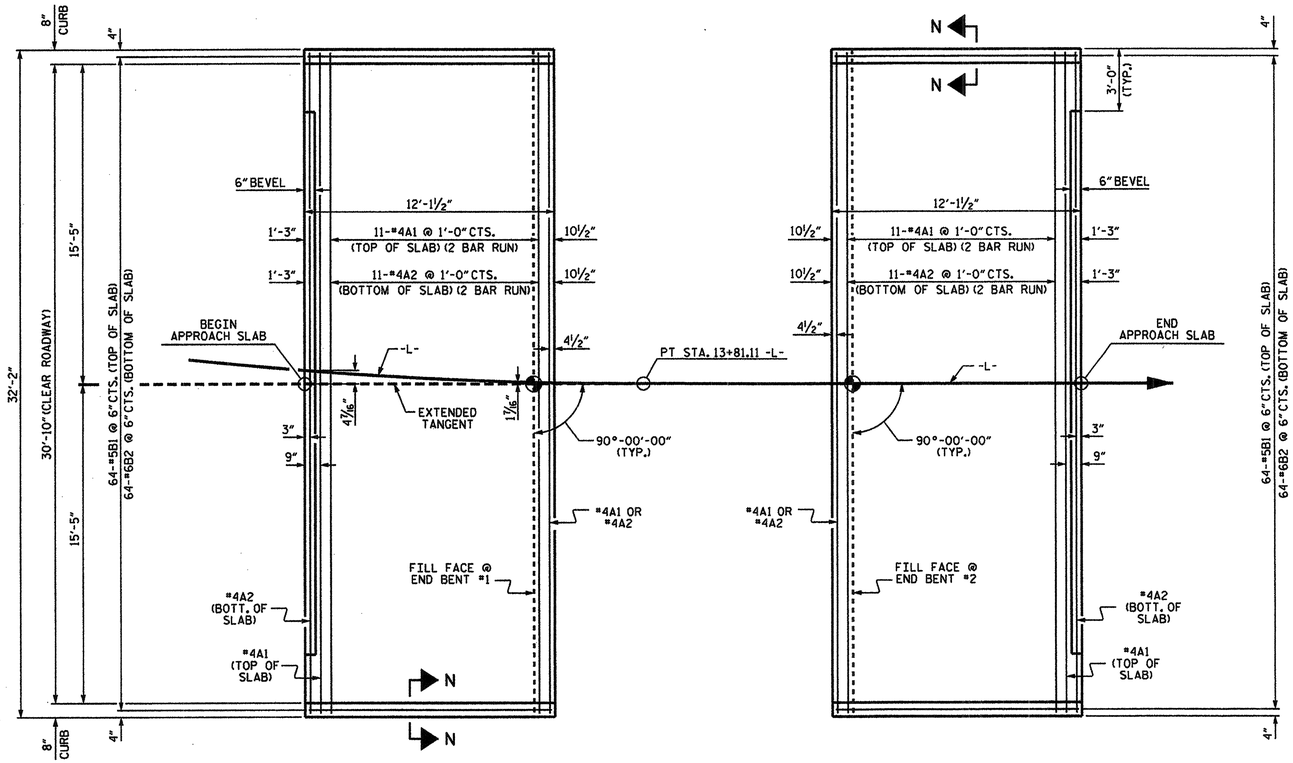


PLAN @ END BENT #1

PLAN @ END BENT #2

DIMENSIONS SHOWN ARE TYPICAL FOR BOTH APPROACH SLABS

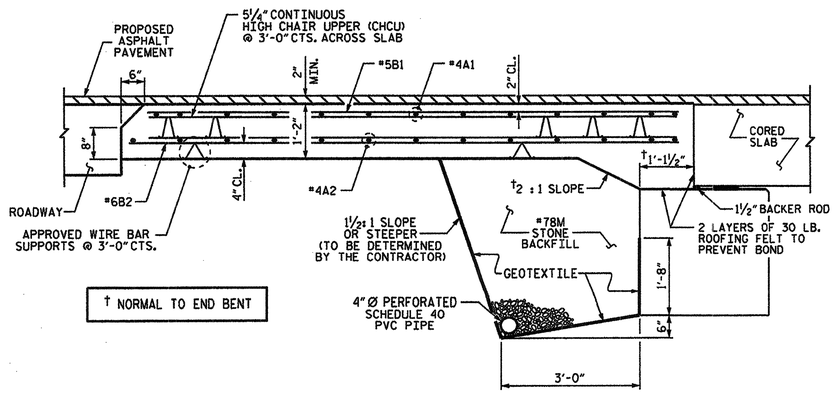


SECTION THRU SLAB

## NOTES

FOR BRIDGE APPROACH FILL INCLUDING GEOTEXTILE, 4" Ø DRAINAGE PIPE, AND #78M STONE BACKFILL, SEE ROADWAY PLANS.

GEOTEXTILE SHALL BE TYPE 1 IN ACCORDANCE WITH THE STANDARD SPECIFICATIONS SECTION 1056.

#78M STONE BACKFILL (CLASS V SELECT MATERIAL) SHALL BE IN ACCORDANCE WITH STANDARD SPECIFICATIONS SECTION 1016.

#78M STONE BACKFILL IS TO BE CONTINUOUS ALONG FILL FACE OF BACKWALL FROM OUTSIDE EDGE TO OUTSIDE EDGE OF APPROACH SLAB.

FOR THE 4" Ø DRAINAGE PIPE OUTLET(S), SEE ROADWAY STANDARD DRAWINGS.

AREA BETWEEN THE WINGWALL AND APPROACH SLAB SHALL BE GRADED TO DRAIN THE WATER AWAY FROM THE FILL FACE OF THE BRIDGE AND SHALL BE PAVED. SEE ROADWAY PLANS.

APPROACH SLAB GROOVING IS NOT REQUIRED.

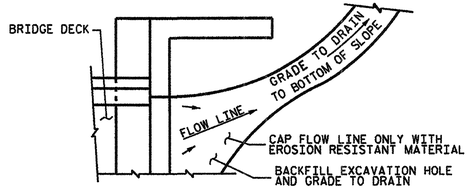


NOTE: IF THE APPROACH SLAB IS NOT CONSTRUCTED IMMEDIATELY AFTER THE BACKFILLING OF THE END BENT EXCAVATION, GRADE TO DRAIN TO THE BOTTOM OF THE SLOPE AND PROVIDE EROSION RESISTANT MATERIAL, SUCH AS FIBERGLASS ROVING OR AS DIRECTED BY THE ENGINEER TO PREVENT SOIL EROSION AND TO PROTECT THE AREA ADJACENT TO THE STRUCTURE. THE CONTRACTOR WILL BE REQUIRED TO REMOVE THESE MATERIALS PRIOR TO CONSTRUCTION OF THE APPROACH SLAB.

## TEMPORARY DRAINAGE DETAIL

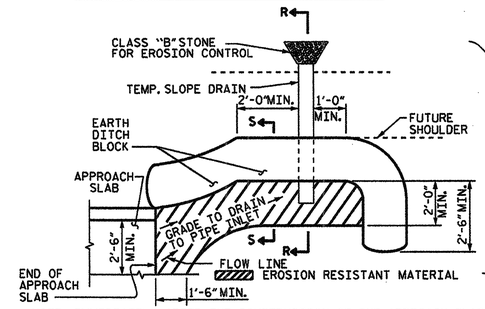


NOTE: IMMEDIATELY AFTER THE CONSTRUCTION OF THE APPROACH SLAB, THE CONTRACTOR SHALL PROVIDE TEMPORARY BERM AND SLOPE DRAIN. CONTRACTOR SHALL GRADE TO PIPE INLET AND PROVIDE EROSION RESISTANT MATERIAL AS SHOWN. THE EROSION RESISTANT MATERIAL SHALL BE EITHER 1) ASPHALT PLANT MIX, TYPE I OR TYPE 2, MIN. 2" DEPTH, 2) EROSION CONTROL MAT, OR 3) CONCRETE, AS DIRECTED BY THE ENGINEER. THE SLOPE DRAIN SHALL CONSIST OF A NON-PERFORATED TEMPORARY DRAINAGE PIPE, 12 INCHES IN DIAMETER.

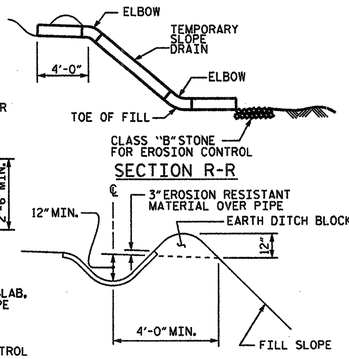


SECTION R-R

SECTION S-S

PLAN VIEW

## TEMPORARY BERM AND SLOPE DRAIN DETAILS

(TO BE USED WHEN SHOULDER BERM GUTTER IS REQUIRED)

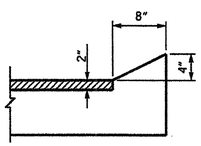


SECTION N-N

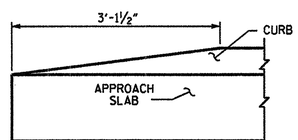


END OF CURB WITHOUT SHOULDER BERM GUTTER

## CURB DETAILS

| SPLICE LENGTHS | | |
|---|---|---|
| BAR SIZE | EPOXY COATED | UNCOATED |
| #4 | 2'-0" | 1'-9" |
| #5 | 2'-6" | 2'-2" |
| #6 | 3'-10" | 2'-7" |

| BILL OF MATERIAL | | | | | |
|---|---|---|---|---|---|
| APPROACH SLAB AT EB #1 | | | | | |
| BAR | NO. | SIZE | TYPE | LENGTH | WEIGHT |
| * A1 | 26 | #4 | STR | 16'-11" | 294 |
| A2 | 26 | #4 | STR | 16'-9" | 291 |
| | | | | | |
| * B1 | 64 | #5 | STR | 11'-2" | 745 |
| B2 | 64 | #6 | STR | 11'-8" | 1121 |
| | | | | | |
| REINFORCING STEEL | | | LBS. | | 1412 |
| * EPOXY COATED REINFORCING STEEL | | | LBS. | | 1039 |
| | | | | | |
| CLASS AA CONCRETE | | | C.Y. | | 18.6 |
| APPROACH SLAB AT EB #2 | | | | | |
| BAR | NO. | SIZE | TYPE | LENGTH | WEIGHT |
| * A1 | 26 | #4 | STR | 16'-11" | 294 |
| A2 | 26 | #4 | STR | 16'-9" | 291 |
| | | | | | |
| * B1 | 64 | #5 | STR | 11'-2" | 745 |
| B2 | 64 | #6 | STR | 11'-8" | 1121 |
| | | | | | |
| REINFORCING STEEL | | | LBS. | | 1412 |
| * EPOXY COATED REINFORCING STEEL | | | LBS. | | 1039 |
| | | | | | |
| CLASS AA CONCRETE | | | C.Y. | | 18.6 |

PROJECT NO. BD-5104M

NASH COUNTY

STATION: 14+10.00 -L-

STATE OF NORTH CAROLINA
DEPARTMENT OF TRANSPORTATION
RALEIGH

STANDARD
BRIDGE APPROACH SLAB
FOR PRESTRESSED CONCRETE
CORED SLAB UNIT
(SUB-REGIONAL TIER)
90° SKEW

NORTH CAROLINA PROFESSIONAL SEAL 14045 ENGINEER TIMOTHY W. COGGINS

12/21/12

| REVISIONS | | | | | | SHEET NO. |
|---|---|---|---|---|---|---|
| NO. | BY: | DATE: | NO. | BY: | DATE: | 23 |
| 1 | | | 3 | | | TOTAL SHEETS |
| 2 | | | 4 | | | 27 |

ASSEMBLED BY : REZA KOUCHEKI DATE : 12/13/12
CHECKED BY : B. L. GREEN DATE : 12/14/12

DRAWN BY : SHS/MAA 5-09 REV. 12-11 MAA/AAC
CHECKED BY : BCH 5-09

21-DEC-2012 12:18
S:\DPG1\Tim\Division 4 LIBR\BD-5104M\BD-5104M_SD_TS.dgn
tcoggins

STD. NO. BAS_33_90S

# STANDARD NOTES

## DESIGN DATA:

| | |
|---|---|
| SPECIFICATIONS | A.A.S.H.T.O. (CURRENT) |
| LIVE LOAD | SEE PLANS |
| IMPACT ALLOWANCE | SEE A.A.S.H.T.O. |
| STRESS IN EXTREME FIBER OF | |
| STRUCTURAL STEEL - AASHTO M270 GRADE 36 | 20,000 LBS. PER SQ. IN. |
| - AASHTO M270 GRADE 50W | 27,000 LBS. PER SQ. IN. |
| - AASHTO M270 GRADE 50 | 27,000 LBS. PER SQ. IN. |
| REINFORCING STEEL IN TENSION | |
| GRADE 60 | 24,000 LBS. PER SQ. IN. |
| CONCRETE IN COMPRESSION | 1,200 LBS. PER SQ. IN. |
| CONCRETE IN SHEAR | SEE A.A.S.H.T.O. |
| STRUCTURAL TIMBER - TREATED OR | |
| UNTREATED - EXTREME FIBER STRESS | 1,800 LBS. PER SQ. IN. |
| COMPRESSION PERPENDICULAR TO GRAIN OF TIMBER | 375 LBS. PER SQ. IN. |
| EQUIVALENT FLUID PRESSURE OF EARTH | 30 LBS. PER CU. FT. (MINIMUM) |

## MATERIAL AND WORKMANSHIP:

EXCEPT AS MAY OTHERWISE BE SPECIFIED ON PLANS OR IN THE SPECIAL PROVISIONS, ALL MATERIAL AND WORKMANSHIP SHALL BE IN ACCORDANCE WITH THE 2012 "STANDARD SPECIFICATIONS FOR ROADS AND STRUCTURES" OF THE N. C. DEPARTMENT OF TRANSPORTATION.

STEEL SHEET PILING FOR PERMANENT OR TEMPORARY APPLICATIONS SHALL BE HOT ROLLED.

## CONCRETE:

UNLESS OTHERWISE REQUIRED ON PLANS, CLASS A CONCRETE SHALL BE USED FOR ALL PORTIONS OF ALL STRUCTURES WITH THE EXCEPTION THAT: CLASS AA CONCRETE SHALL BE USED IN BRIDGE SUPERSTRUCTURES, ABUTMENT BACKWALLS, AND APPROACH SLABS; AND CLASS B CONCRETE SHALL BE USED FOR SLOPE PROTECTION AND RIP RAP.

## CONCRETE CHAMFERS:

UNLESS OTHERWISE NOTED ON THE PLANS, ALL EXPOSED CORNERS ON STRUCTURES SHALL BE CHAMFERED 3/4" WITH THE FOLLOWING EXCEPTIONS: TOP CORNERS OF CURBS MAY BE ROUNDED TO 1-1/2" RADIUS WHICH IS BUILT INTO CURB FORMS; CORNERS OF TRANSVERSE FLOOR EXPANSION JOINTS SHALL BE ROUNDED WITH A 1/4" FINISHING TOOL UNLESS OTHERWISE REQUIRED ON PLANS; AND CORNERS OF EXPANSION JOINTS IN THE ROADWAY FACES AND TOPS OF CURBS AND SIDEWALKS SHALL BE ROUNDED TO A 1/4" RADIUS WITH A FINISHING STONE OR TOOL UNLESS OTHERWISE REQUIRED ON PLANS.

## DOWELS:

DOWELS WHEN INDICATED ON PLANS AS FOR CULVERT EXTENSIONS, SHALL BE EMBEDDED AT LEAST 12" INTO THE OLD CONCRETE AND GROUTED INTO PLACE WITH 1:2 CEMENT MORTAR.

## ALLOWANCE FOR DEAD LOAD DEFLECTION, SETTLEMENT, ETC. IN CASTING SUPERSTRUCTURES:

BRIDGES SHALL BE BUILT ON THE GRADE OR VERTICAL CURVE SHOWN ON PLANS. SLABS, CURBS AND PARAPETS SHALL CONFORM TO THE GRADE OR CURVE.

ALL DIMENSIONS WHICH ARE GIVEN IN SECTION AND ARE AFFECTED BY DEAD LOAD DEFLECTIONS ARE DIMENSIONS AT CENTER LINE OF BEARING UNLESS OTHERWISE NOTED ON PLANS. IN SETTING FORMS FOR STEEL BEAM BRIDGES AND PRESTRESSED CONCRETE GIRDER BRIDGES, ADJUSTMENTS SHALL BE MADE DUE TO THE DEAD LOAD DEFLECTIONS FOR THE ELEVATIONS SHOWN. WHERE BLOCKS ARE SHOWN OVER BEAMS FOR BUILDING UP TO THE SLAB, THE VERTICAL DIMENSIONS OF THE BLOCKS SHALL BE ADJUSTED BETWEEN BEARINGS TO COMPENSATE FOR DEAD LOAD DEFLECTIONS, VERTICAL CURVE ORDINATE, AND ACTUAL BEAM CAMBER. WHERE BOTTOM OF SLAB IS IN LINE WITH BOTTOM OF TOP FLANGES, DEPTH OF SLAB BETWEEN BEARINGS SHALL BE ADJUSTED TO COMPENSATE FOR DEAD LOAD DEFLECTION, VERTICAL CURVE ORDINATE, AND ACTUAL BEAM CAMBER.

IN SETTING FALSEWORK AND FORMS FOR REINFORCED CONCRETE SPANS, AN ALLOWANCE SHALL BE MADE FOR DEAD LOAD DEFLECTIONS, SETTLEMENT OF FALSEWORK, AND PERMANENT CAMBER WHICH SHALL BE PROVIDED FOR IN ADDITION TO THE ELEVATIONS SHOWN. AFTER REMOVAL OF THE FALSEWORK, THE FINISHED STRUCTURES SHALL CONFORM TO THE PROFILE AND ELEVATIONS SHOWN ON THE PLANS AND CONSTRUCTION ELEVATIONS FURNISHED BY THE ENGINEER.

DETAILED DRAWINGS FOR FALSEWORK OR FORMS FOR BRIDGE SUPERSTRUCTURE AND ANY STRUCTURE OR PARTS OF A STRUCTURE AS NOTED ON THE PLANS SHALL BE SUBMITTED TO THE ENGINEER FOR APPROVAL BEFORE CONSTRUCTION OF THE FALSEWORK OR FORMS IS STARTED.

## REINFORCING STEEL:

ALL REINFORCING STEEL SHALL BE DEFORMED. DIMENSIONS RELATIVE TO PLACEMENT OF REINFORCING ARE TO CENTERS OF BARS UNLESS OTHERWISE INDICATED IN THE PLANS. DIMENSIONS ON BAR DETAILS ARE TO CENTERS OF BARS OR ARE OUT TO OUT AS INDICATED ON PLANS.

WIRE BAR SUPPORTS SHALL BE PROVIDED FOR REINFORCING STEEL WHERE INDICATED ON THE PLANS. WHEN BAR SUPPORT PIECES ARE PLACED IN CONTINUOUS LINES, THEY SHALL BE SO PLACED THAT THE ENDS OF THE SUPPORTING WIRES SHALL BE LAPPED TO LOCK LEGS ON ADJOINING PIECES.

## STRUCTURAL STEEL:

AT THE CONTRACTOR'S OPTION, HE MAY SUBSTITUTE 7/8" Ø SHEAR STUDS FOR THE 3/4" Ø STUDS SPECIFIED ON THE PLANS. THIS SUBSTITUTION SHALL BE MADE AT THE RATE OF 3 - 7/8" Ø STUDS FOR 4 - 3/4" Ø STUDS, AND STUD SPACING CHANGES SHALL BE MADE AS NECESSARY TO PROVIDE THE SAME EQUIVALENT NUMBER OF 7/8" Ø STUDS ALONG THE BEAM AS SHOWN FOR 3/4" Ø STUDS BASED ON THE RATIO OF 3 - 7/8" Ø STUDS FOR 4 - 3/4" Ø STUDS. STUDS OF THE LENGTH SPECIFIED ON THE PLANS MUST BE PROVIDED. THE MAXIMUM SPACING SHALL BE 2'-0".

EXCEPT AT THE INTERIOR SUPPORTS OF CONTINUOUS BEAMS WHERE THE COVER PLATE IS IN CONTACT WITH BEARING PLATE, THE CONTRACTOR MAY, AT HIS OPTION, SUBSTITUTE FOR THE COVER PLATES DESIGNATED ON THE PLANS COVER PLATES OF THE EQUIVALENT AREA PROVIDED THESE PLATES ARE AT LEAST 5/16" IN THICKNESS AND DO NOT EXCEED A WIDTH EQUAL TO THE FLANGE WIDTH LESS 2" OR A THICKNESS EQUAL TO 2 TIMES THE FLANGE THICKNESS. THE SIZE OF FILLET WELDS SHALL CONFORM TO THE REQUIREMENTS OF THE CURRENT ANSI/AASHTO/AWS "BRIDGE WELDING CODE". ELECTROSLAG WELDING WILL NOT BE PERMITTED.

WITH THE SOLE EXCEPTION OF EDGES AT SURFACES WHICH BEAR ON OTHER SURFACES, ALL SHARP EDGES AND ENDS OF SHAPES AND PLATES SHALL BE SLIGHTLY ROUNDED BY SUITABLE MEANS TO A RADIUS OF APPROXIMATELY 1/16 INCH OR EQUIVALENT FLAT SURFACE AT A SUITABLE ANGLE PRIOR TO PAINTING, GALVANIZING, OR METALLIZING.

## HANDRAILS AND POSTS:

METAL STANDARDS AND FACES OF THE CONCRETE END POSTS FOR THE METAL RAIL SHALL BE SET NORMAL TO THE GRADE OF THE CURB, UNLESS OTHERWISE SHOWN ON PLANS. THE METAL RAIL AND TOPS OF CONCRETE POSTS USED WITH THE ALUMINUM RAIL SHALL BE BUILT PARALLEL TO THE GRADE OF THE CURB.

METAL HANDRAILS SHALL BE IN ACCORDANCE WITH THE PLANS. RAILS SHALL BE AS MANUFACTURED FOR BRIDGE RAILING. CASTINGS SHALL BE OF A UNIFORM APPEARANCE. FINS AND OTHER DEFORMATIONS RESULTING FROM CASTING OR OTHERWISE SHALL BE REMOVED IN A MANNER SO THAT A UNIFORM COLORING OF THE COMPLETED CASTING SHALL BE OBTAINED. CASTINGS WITH DISCOLORATIONS OR OF NON-UNIFORM COLORING WILL NOT BE ACCEPTED. CERTIFIED MILL REPORTS ARE REQUIRED FOR METAL RAILS AND POSTS.

## SPECIAL NOTES:

GENERALLY, IN CASE OF DISCREPANCY, THIS STANDARD SHEET OF NOTES SHALL GOVERN OVER THE SPECIFICATIONS, BUT THE REMAINDER OF THE PLANS SHALL GOVERN OVER NOTES HEREON, AND SPECIAL PROVISIONS SHALL GOVERN OVER ALL. SEE SPECIFICATIONS ARTICLE 105-4.

ENGLISH
JANUARY, 1990

SHEET NO. 24
TOTAL SHEETS 27

STD. NO. SN

REV. 6-16-95 EEM (/) RGW REV. 5-7-03 RWW (/) JTE REV. 10-1-11 MAA (/) GM
REV. 8-16-99 RWW (/) LES REV. 5-1-06 TLA (/) GM

1/29/2013
$$$$$$$$$$$$$$$$$$$$$$$$DGN$$$$$$$$$$$$$$$$$$$$$$$$
9:39:12 AM

# EROSION CONTROL PLAN

ENVIRONMENTALLY SENSITIVE AREA
SEE PROJECT SPECIAL PROVISIONS

NOTE:
PLACE TEMPORARY ROCK SEDIMENT DAMS TYPE – B AND TEMPORARY ROCK SILT CHECKS TYPE – A AT DRAINAGE OUTLETS.

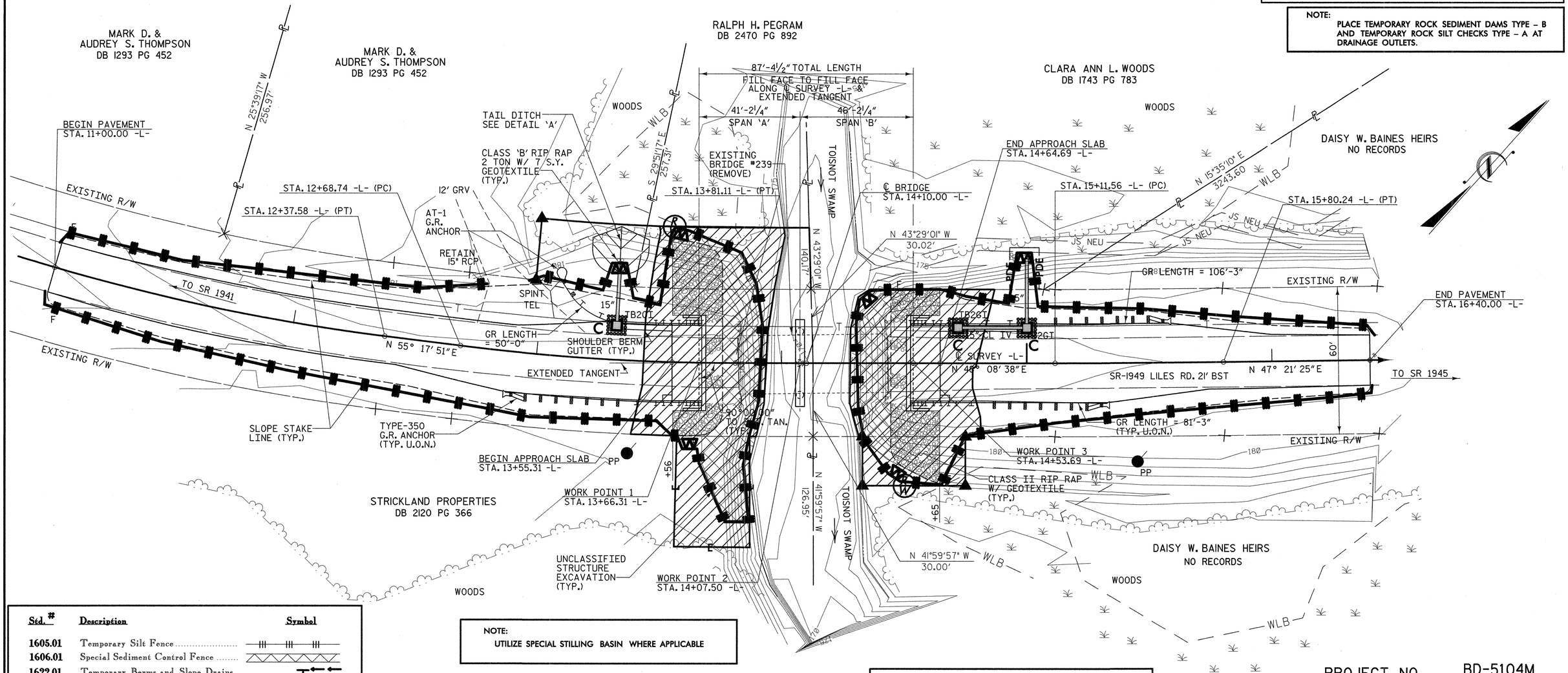


| Std. # | Description | Symbol |
|---|---|---|
| 1605.01 | Temporary Silt Fence | |
| 1606.01 | Special Sediment Control Fence | |
| 1622.01 | Temporary Berms and Slope Drains | |
| 1630.02 | Silt Basin Type B | |
| 1630.03 | Temporary Silt Ditch | TSD |
| 1630.05 | Temporary Diversion | TD |
| 1630.06 | Special Stilling Basin | |
| 1632.03 | Rock Inlet Sediment Trap Type C | |
| 1633.01 | Temporary Rock Silt Check Type-A | |
| | Temporary Rock Silt Check Type-A with Matting and Polyacrylamide (PAM) | |
| 1633.02 | Temporary Rock Silt Check Type-B | |
| | Wattle | |
| | Wattle with Polyacrylamide (PAM) | |
| 1634.02 | Temporary Rock Sediment Dam Type-B | |
| 1635.01 | Rock Pipe Inlet Sediment Trap Type-A | |

NOTE:
UTILIZE SPECIAL STILLING BASIN WHERE APPLICABLE

*THESE EROSION AND SEDIMENT CONTROL PLANS COMPLY WITH THE REGULATIONS SET FORTH BY THE NCG-010000 GENERAL CONSTRUCTION PERMIT EFFECTIVE AUGUST 3, 2011 ISSUED BY THE NORTH CAROLINA DEPARTMENT OF ENVIRONMENT AND NATURAL RESOURCES DIVISION OF WATER QUALITY.*

**NOTES: ANY DEVIATION FROM OPTIONS GIVEN WILL REQUIRE PRIOR APPROVAL BY ENGINEER.**

**ADDITIONAL EROSION CONTROL DEVICES MAY NEED TO BE INSTALLED AS DIRECTED BY THE ENGINEER.**

ROADSIDE ENVIRONMENTAL UNIT
DEPARTMENT OF TRANSPORTATION
DIVISION OF HIGHWAYS
RALEIGH, N.C.

2012 STANDARD SPECIFICATIONS

## 2012 STANDARD DRAWINGS

| | | | |
|---|---|---|---|
| 1604.01 | Railroad Erosion Control Detail | 1632.01 | Rock Inlet Sediment Trap Type A |
| 1605.01 | Temporary Silt Fence | 1632.02 | Rock Inlet Sediment Trap Type B |
| 1606.01 | Special Sediment Control Fence | 1632.03 | Rock Inlet Sediment Trap Type C |
| 1607.01 | Gravel Construction Entrance | 1633.01 | Temporary Rock Silt Check Type A |
| 1622.01 | Temporary Berms and Slope Drains | 1633.02 | Temporary Rock Silt Check Type B |
| 1630.01 | Riser Basin | 1634.01 | Temporary Rock Sediment Dam Type A |
| 1630.02 | Silt Basin Type B | 1634.02 | Temporary Rock Sediment Dam Type B |
| 1630.03 | Temporary Silt Ditch | 1635.01 | Rock Pipe Inlet Sediment Trap Type A |
| 1630.04 | Stilling Basin | 1635.02 | Rock Pipe Inlet Sediment Trap Type B |
| 1630.05 | Temporary Diversion | 1640.01 | Coir Fiber Baffle |
| 1630.06 | Special Stilling Basin | 1645.01 | Temporary Stream Crossing |
| 1631.01 | Matting Installation | | |

PROJECT NO. BD-5104M
NASH COUNTY
STATION: 14+10.00 -L-

REPLACES BRIDGE NO. 239

STATE OF NORTH CAROLINA
DEPARTMENT OF TRANSPORTATION
RALEIGH

# BRIDGE ON SR 1949 OVER TOISNOT SWAMP BETWEEN SR 1941 & SR 1945

30'-10" CLEAR ROADWAY - 90° SKEW

| REVISIONS | | | | | | SHEET NO. |
|---|---|---|---|---|---|---|
| NO. | BY: | DATE: | NO. | BY: | DATE: | EC-1 |
| 1 | | | 3 | | | TOTAL SHEETS |
| 2 | | | 4 | | | 27 |

1/29/2013 9:39:56 AM R:\Structures\Erosion Control\BD5104M_SD_EC_01.dgn

| PROJECT REFERENCE NO. | SHEET NO. |
|---|---|
| BD-5104M | EC-2 |
| ROADWAY DESIGN ENGINEER | HYDRAULICS ENGINEER |

DIVISION OF HIGHWAYS
STATE OF NORTH CAROLINA

# *SOIL STABILIZATION TIMEFRAMES*

| *SITE DESCRIPTION* | *STABILIZATION TIME* | *TIMEFRAME EXCEPTIONS* |
|---|---|---|
| PERIMETER DIKES, SWALES, DITCHES AND SLOPES | 7 DAYS | NONE |
| HIGH QUALITY WATER (HQW) ZONES | 7 DAYS | NONE |
| SLOPES STEEPER THAN 3:1 | 7 DAYS | IF SLOPES ARE 10' OR LESS IN LENGTH AND ARE NOT STEEPER THAN 2:1, 14 DAYS ARE ALLOWED. |
| SLOPES 3:1 OR FLATTER | 14 DAYS | 7 DAYS FOR SLOPES GREATER THAN 50' IN LENGTH. |
| ALL OTHER AREAS WITH SLOPES FLATTER THAN 4:1 | 14 DAYS | NONE, EXCEPT FOR PERIMETERS AND HQW ZONES. |

NOTES: ANY DEVIATION FROM OPTIONS GIVEN WILL REQUIRE PRIOR APPROVAL BY ENGINEER.

ADDITIONAL EROSION CONTROL DEVICES MAY NEED TO BE INSTALLED AS DIRECTED BY THE ENGINEER.

ROADSIDE ENVIRONMENTAL UNIT
DEPARTMENT OF TRANSPORTATION
DIVISION OF HIGHWAYS
RALEIGH, N.C.

2012 STANDARD SPECIFICATIONS

| PROJECT REFERENCE NO. | SHEET NO. |
|---|---|
| BD-5104M | EC-3 |
| R/W SHEET NO. | |
| ROADWAY DESIGN ENGINEER | HYDRAULICS ENGINEER |

# PLANTING DETAILS

## SEEDLING / LINER BAREROOT PLANTING DETAIL

### HEALING IN

1. Locate a healing-in site in a shady, well protected area.
2. Excavate a flat bottom trench 12 inches deep and provide drainage.

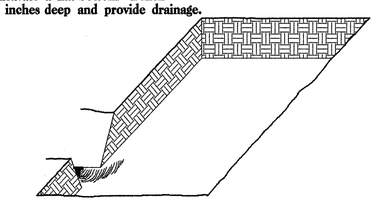

3. Backfill the trench with 2 inches well rotted sawdust. Place a 2 inch layer of well rotted sawdust at a sloping angle at one end of the trench.

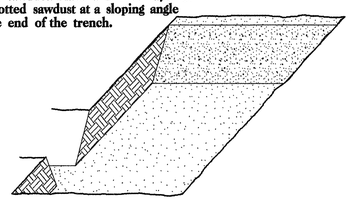

4. Place a single layer of plants against the sloping end so that the root collar is at ground level.

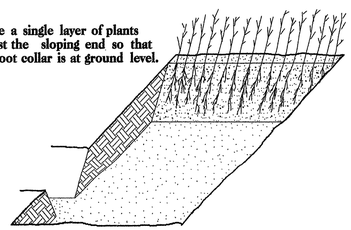

5. Place a 2 inch layer of well rotted sawdust over the roots maintaining a sloping angle.

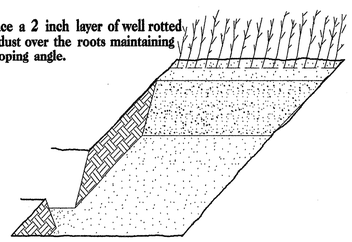

6. Repeat layers of plants and sawdust as necessary and water thoroughly.

### DIBBLE PLANTING METHOD
### USING THE KBC PLANTING BAR

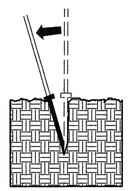

1. Insert planting bar as shown and pull handle toward planter.

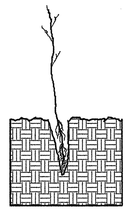

2. Remove planting bar and place seedling at correct depth.

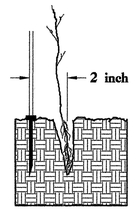


3. Insert planting bar 2 inches toward planter from seedling.

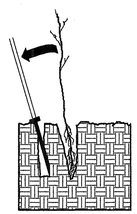

4. Pull handle of bar toward planter, firming soil at bottom.

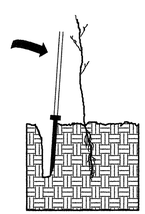

5. Push handle forward firming soil at top.

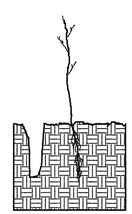

6. Leave compaction hole open. Water thoroughly.

### PLANTING NOTES:

**PLANTING BAG**
During planting, seedlings shall be kept in a moist canvas bag or similar container to prevent the root systems from drying.



**KBC PLANTING BAR**
Planting bar shall have a blade with a triangular cross section, and shall be 12 inches long, 4 inches wide and 1 inch thick at center.



**ROOT PRUNING**
All seedlings shall be root pruned, if necessary, so that no roots extend more than 10 inches below the root collar.

# REFORESTATION

☐ TREE REFORESTATION SHALL BE PLANTED 6 FT. TO 10 FT. ON CENTER, RANDOM SPACING, AVERAGING 8 FT. ON CENTER, APPROXIMATELY 680 PLANTS PER ACRE.

**REFORESTATION**

MIXTURE, TYPE, SIZE, AND FURNISH SHALL CONFORM TO THE FOLLOWING:

| | | |
|---|---|---|
| 40% PLATANUS OCCIDENTALIS | AMERICAN SYCAMORE | 12 in - 18 in BR |
| 30% LIRIODENDRON TULIPIFERA | YELLOW POPLAR | 12 in - 18 in BR |
| 30% FRAXINUS PENNSYLVANICA | GREEN ASH | 12 in - 18 in BR |

NOTES: ANY DEVIATION FROM OPTIONS GIVEN WILL REQUIRE PRIOR APPROVAL BY ENGINEER.

ADDITIONAL EROSION CONTROL DEVICES MAY NEED TO BE INSTALLED AS DIRECTED BY THE ENGINEER.

ROADSIDE ENVIRONMENTAL UNIT
DEPARTMENT OF TRANSPORTATION
DIVISION OF HIGHWAYS
RALEIGH, N.C.

2012 STANDARD SPECIFICATIONS

# REFORESTATION DETAIL SHEET

N.C.D.O.T. - ROADSIDE ENVIRONMENTAL UNIT

| STATE | STATE PROJECT REFERENCE NO. | SHEET NO. | TOTAL SHEETS |
|---|---|---|---|
| N.C. | 45350.1.14 (BD-5104M) | 1 | 13 |

PROJECT: 45350.1.14 ID: BD-5104M

# STATE OF NORTH CAROLINA
## DEPARTMENT OF TRANSPORTATION
## DIVISION OF HIGHWAYS
## GEOTECHNICAL ENGINEERING UNIT

# STRUCTURE SUBSURFACE INVESTIGATION

PROJ. REFERENCE NO. 45350.1.14 (BD-5104M) F.A. PROJ. N/A

COUNTY NASH

PROJECT DESCRIPTION BRIDGE NO. 239 ON SR 1949 (LILES ROAD) OVER TOISNOT SWAMP

## CONTENTS


| SHEET | DESCRIPTION |
|---|---|
| 1 | TITLE SHEET |
| 2 | LEGEND |
| 3 | SITE PLAN |
| 4 | PROFILE |
| 5, 6 | CROSS SECTIONS |
| 7-10 | BORE LOGS & CORE REPORT |
| 11 | CORE PHOTOGRAPH |
| 12 | SITE PHOTOGRAPH |
| 13 | ROCK TEST RESULTS |


## CAUTION NOTICE

THE SUBSURFACE INFORMATION AND THE SUBSURFACE INVESTIGATION ON WHICH IT IS BASED WERE MADE FOR THE PURPOSE OF STUDY, PLANNING, AND DESIGN AND NOT FOR CONSTRUCTION OR PAY PURPOSES. THE VARIOUS FIELD BORING LOGS, ROCK CORES, AND SOIL TEST DATA AVAILABLE MAY BE REVIEWED OR INSPECTED IN RALEIGH BY CONTACTING THE N. C. DEPARTMENT OF TRANSPORTATION, GEOTECHNICAL ENGINEERING UNIT AT (919) 707-6850. NEITHER THE SUBSURFACE PLANS AND REPORTS, NOR THE FIELD BORING LOGS, ROCK CORES, OR SOIL TEST DATA ARE PART OF THE CONTRACT.

GENERAL SOIL AND ROCK STRATA DESCRIPTIONS AND INDICATED BOUNDARIES ARE BASED ON A GEOTECHNICAL INTERPRETATION OF ALL AVAILABLE SUBSURFACE DATA AND MAY NOT NECESSARILY REFLECT THE ACTUAL SUBSURFACE CONDITIONS BETWEEN BORINGS OR BETWEEN SAMPLED STRATA WITHIN THE BOREHOLE. THE LABORATORY SAMPLE DATA AND THE IN SITU (IN-PLACE) TEST DATA CAN BE RELIED ON ONLY TO THE DEGREE OF RELIABILITY INHERENT IN THE STANDARD TEST METHOD. THE OBSERVED WATER LEVELS OR SOIL MOISTURE CONDITIONS INDICATED IN THE SUBSURFACE INVESTIGATIONS ARE AS RECORDED AT THE TIME OF THE INVESTIGATION. THESE WATER LEVELS OR SOIL MOISTURE CONDITIONS MAY VARY CONSIDERABLY WITH TIME ACCORDING TO CLIMATIC CONDITIONS INCLUDING TEMPERATURES, PRECIPITATION, AND WIND, AS WELL AS OTHER NON-CLIMATIC FACTORS.

THE BIDDER OR CONTRACTOR IS CAUTIONED THAT DETAILS SHOWN ON THE SUBSURFACE PLANS ARE PRELIMINARY ONLY AND IN MANY CASES THE FINAL DESIGN DETAILS ARE DIFFERENT. FOR BIDDING AND CONSTRUCTION PURPOSES, REFER TO THE CONSTRUCTION PLANS AND DOCUMENTS FOR FINAL DESIGN INFORMATION ON THIS PROJECT. THE DEPARTMENT DOES NOT WARRANT OR GUARANTEE THE SUFFICIENCY OR ACCURACY OF THE INVESTIGATION MADE, NOR THE INTERPRETATIONS MADE, OR OPINION OF THE DEPARTMENT AS TO THE TYPE OF MATERIALS AND CONDITIONS TO BE ENCOUNTERED. THE BIDDER OR CONTRACTOR IS CAUTIONED TO MAKE SUCH INDEPENDENT SUBSURFACE INVESTIGATIONS AS HE DEEMS NECESSARY TO SATISFY HIMSELF AS TO CONDITIONS TO BE ENCOUNTERED ON THIS PROJECT. THE CONTRACTOR SHALL HAVE NO CLAIM FOR ADDITIONAL COMPENSATION OR FOR AN EXTENSION OF TIME FOR ANY REASON RESULTING FROM THE ACTUAL CONDITIONS ENCOUNTERED AT THE SITE DIFFERING FROM THOSE INDICATED IN THE SUBSURFACE INFORMATION.

PERSONNEL

N.D. MOHS

O.B. OTT

H.R. CONLEY

J.R. MATULA

H.L. FROATS

INVESTIGATED BY N.D. MOHS

CHECKED BY N.T. ROBERSON

SUBMITTED BY N.T. ROBERSON

DATE OCTOBER 2012

NORTH CAROLINA LICENSED SEAL 2124 GEOLOGIST NATHAN DANIEL MOHS

12/4/12

DRAWN BY: T.T. WALKER, N.D. MOHS

NOTE - THE INFORMATION CONTAINED HEREIN IS NOT IMPLIED OR GUARANTEED BY THE N. C. DEPARTMENT OF TRANSPORTATION AS BEING ACCURATE NOR IT IS CONSIDERED TO BE PART OF THE PLANS, SPECIFICATIONS, OR CONTRACT FOR THE PROJECT.

NOTE - BY HAVING REQUESTED THIS INFORMATION THE CONTRACTOR SPECIFICALLY WAIVES ANY CLAIMS FOR INCREASED COMPENSATION OR EXTENSION OF TIME BASED ON DIFFERENCES BETWEEN THE CONDITIONS INDICATED HEREIN AND THE ACTUAL CONDITIONS AT THE PROJECT SITE.

| PROJECT REFERENCE NO. | SHEET NO. |
|---|---|
| 45350.1.1 (BD-5104M) | 2 |

NORTH CAROLINA DEPARTMENT OF TRANSPORTATION

DIVISION OF HIGHWAYS

GEOTECHNICAL ENGINEERING UNIT

# SUBSURFACE INVESTIGATION

## SOIL AND ROCK LEGEND, TERMS, SYMBOLS, AND ABBREVIATIONS

### SOIL DESCRIPTION

SOIL IS CONSIDERED TO BE THE UNCONSOLIDATED, SEMI-CONSOLIDATED, OR WEATHERED EARTH MATERIALS THAT CAN BE PENETRATED WITH A CONTINUOUS FLIGHT POWER AUGER, AND YIELD LESS THAN 100 BLOWS PER FOOT ACCORDING TO STANDARD PENETRATION TEST (AASHTO T206, ASTM D-1586). SOIL CLASSIFICATION IS BASED ON THE AASHTO SYSTEM, BASIC DESCRIPTIONS GENERALLY SHALL INCLUDE: CONSISTENCY, COLOR, TEXTURE, MOISTURE, AASHTO CLASSIFICATION, AND OTHER PERTINENT FACTORS SUCH AS MINERALOGICAL COMPOSITION, ANGULARITY, STRUCTURE, PLASTICITY, ETC. EXAMPLE:

*VERY STIFF, GRAY, SILTY CLAY, MOIST WITH INTERBEDDED FINE SAND LAYERS, HIGHLY PLASTIC, A-7-6*

### SOIL LEGEND AND AASHTO CLASSIFICATION

| GENERAL CLASS. | GRANULAR MATERIALS (≤ 35% PASSING #200) | | | | | | SILT-CLAY MATERIALS (> 35% PASSING #200) | | | | ORGANIC MATERIALS | |
|---|---|---|---|---|---|---|---|---|---|---|---|---|
| GROUP CLASS. | A-1 | | A-3 | A-2 | | | A-4 | A-5 | A-6 | A-7 | A-1, A-2<br>A-3 | A-4, A-5<br>A-6, A-7 |
| | A-1-a | A-1-b | | A-2-4 | A-2-5 | A-2-6 | A-2-7 | | | | | |
| SYMBOL | | | | | | | | | | | | |
| % PASSING<br>#10<br>#40<br>#200 | 50 MX<br>30 MX<br>15 MX | 50 MX<br>25 MX | 51 MN<br>10 MX | 35 MX | 35 MX | 35 MX | 35 MX | 36 MN | 36 MN | 36 MN | GRANULAR SOILS | SILT-CLAY SOILS | MUCK, PEAT |
| LIQUID LIMIT<br>PLASTIC INDEX | 6 MX | | NP | 40 MX<br>10 MX | 41 MN<br>10 MX | 40 MX<br>10 MX | 41 MN<br>11 MN | 40 MX<br>10 MX | 41 MN<br>10 MN | 40 MX<br>11 MN | SOILS WITH LITTLE OR MODERATE AMOUNTS OF ORGANIC MATTER | | HIGHLY ORGANIC SOILS |
| GROUP INDEX | 0 | | 0 | 0 | | 4 MX | | 8 MX | 12 MX | 16 MX | No MX | | |
| USUAL TYPES OF MAJOR MATERIALS | STONE FRAGS. AND GRAVEL | | FINE SAND | SILTY OR CLAYEY GRAVEL AND SAND | | | SILTY SOILS | | CLAYEY SOILS | | | | |
| GEN. RATING AS A SUBGRADE | EXCELLENT TO GOOD | | | | | | FAIR TO POOR | | | | FAIR TO POOR | POOR | UNSUITABLE |

PI OF A-7-5 SUBGROUP IS ≤ LL - 30 ; PI OF A-7-6 SUBGROUP IS > LL - 30

### CONSISTENCY OR DENSENESS

| PRIMARY SOIL TYPE | COMPACTNESS OR CONSISTENCY | RANGE OF STANDARD PENETRATION RESISTENCE (N-VALUE) | RANGE OF UNCONFINED COMPRESSIVE STRENGTH (TONS/FT²) |
|---|---|---|---|
| GENERALLY GRANULAR MATERIAL (NON-COHESIVE) | VERY LOOSE<br>LOOSE<br>MEDIUM DENSE<br>DENSE<br>VERY DENSE | <4<br>4 TO 10<br>10 TO 30<br>30 TO 50<br>>50 | N/A |
| GENERALLY SILT-CLAY MATERIAL (COHESIVE) | VERY SOFT<br>SOFT<br>MEDIUM STIFF<br>STIFF<br>VERY STIFF<br>HARD | <2<br>2 TO 4<br>4 TO 8<br>8 TO 15<br>15 TO 30<br>>30 | <0.25<br>0.25 TO 0.50<br>0.5 TO 1.0<br>1 TO 2<br>2 TO 4<br>>4 |

### TEXTURE OR GRAIN SIZE

| U.S. STD. SIEVE SIZE | 4 | 10 | 40 | 60 | 200 | 270 |
|---|---|---|---|---|---|---|
| OPENING (MM) | 4.76 | 2.00 | 0.42 | 0.25 | 0.075 | 0.053 |

| BOULDER (BLDR.) | COBBLE (COBL.) | GRAVEL (GR.) | COARSE SAND (CSE. SD.) | FINE SAND (F SD.) | SILT (SL.) | CLAY (CL.) |
|---|---|---|---|---|---|---|

| GRAIN SIZE | MM | 305 | 75 | 2.0 | 0.25 | 0.05 | 0.005 |
|---|---|---|---|---|---|---|---|
| | IN. | 12 | 3 | | | | |

### SOIL MOISTURE - CORRELATION OF TERMS

| SOIL MOISTURE SCALE (ATTERBERG LIMITS) | FIELD MOISTURE DESCRIPTION | GUIDE FOR FIELD MOISTURE DESCRIPTION |
|---|---|---|
| | - SATURATED - (SAT.) | USUALLY LIQUID; VERY WET, USUALLY FROM BELOW THE GROUND WATER TABLE |
| LL — LIQUID LIMIT | | |
| PLASTIC RANGE (PI) | - WET - (W) | SEMISOLID; REQUIRES DRYING TO ATTAIN OPTIMUM MOISTURE |
| PL — PLASTIC LIMIT | | |
| OM — OPTIMUM MOISTURE | - MOIST - (M) | SOLID; AT OR NEAR OPTIMUM MOISTURE |
| SL — SHRINKAGE LIMIT | | |
| | - DRY - (D) | REQUIRES ADDITIONAL WATER TO ATTAIN OPTIMUM MOISTURE |

### PLASTICITY

| | PLASTICITY INDEX (PI) | DRY STRENGTH |
|---|---|---|
| NONPLASTIC | 0-5 | VERY LOW |
| LOW PLASTICITY | 6-15 | SLIGHT |
| MED. PLASTICITY | 16-25 | MEDIUM |
| HIGH PLASTICITY | 26 OR MORE | HIGH |

### COLOR

DESCRIPTIONS MAY INCLUDE COLOR OR COLOR COMBINATIONS (TAN, RED, YELLOW-BROWN, BLUE-GRAY). MODIFIERS SUCH AS LIGHT, DARK, STREAKED, ETC. ARE USED TO DESCRIBE APPEARANCE.

### GRADATION

WELL GRADED - INDICATES A GOOD REPRESENTATION OF PARTICLE SIZES FROM FINE TO COARSE.
UNIFORM - INDICATES THAT SOIL PARTICLES ARE ALL APPROXIMATELY THE SAME SIZE. (ALSO POORLY GRADED)
GAP-GRADED - INDICATES A MIXTURE OF UNIFORM PARTICLES OF TWO OR MORE SIZES.

### ANGULARITY OF GRAINS

THE ANGULARITY OR ROUNDNESS OF SOIL GRAINS IS DESIGNATED BY THE TERMS: ANGULAR, SUBANGULAR, SUBROUNDED, OR ROUNDED.

### MINERALOGICAL COMPOSITION

MINERAL NAMES SUCH AS QUARTZ, FELDSPAR, MICA, TALC, KAOLIN, ETC. ARE USED IN DESCRIPTIONS WHENEVER THEY ARE CONSIDERED OF SIGNIFICANCE.

### COMPRESSIBILITY

| | |
|---|---|
| SLIGHTLY COMPRESSIBLE | LIQUID LIMIT LESS THAN 31 |
| MODERATELY COMPRESSIBLE | LIQUID LIMIT EQUAL TO 31-50 |
| HIGHLY COMPRESSIBLE | LIQUID LIMIT GREATER THAN 50 |

### PERCENTAGE OF MATERIAL

| ORGANIC MATERIAL | GRANULAR SOILS | SILT - CLAY SOILS | OTHER MATERIAL | |
|---|---|---|---|---|
| TRACE OF ORGANIC MATTER | 2 - 3% | 3 - 5% | TRACE | 1 - 10% |
| LITTLE ORGANIC MATTER | 3 - 5% | 5 - 12% | LITTLE | 10 - 20% |
| MODERATELY ORGANIC | 5 - 10% | 12 - 20% | SOME | 20 - 35% |
| HIGHLY ORGANIC | >10% | >20% | HIGHLY | 35% AND ABOVE |

### GROUND WATER

- WATER LEVEL IN BORE HOLE IMMEDIATELY AFTER DRILLING
- STATIC WATER LEVEL AFTER 24 HOURS
- PW — PERCHED WATER, SATURATED ZONE, OR WATER BEARING STRATA
- SPRING OR SEEP

### MISCELLANEOUS SYMBOLS

- ROADWAY EMBANKMENT (RE) WITH SOIL DESCRIPTION
- SOIL SYMBOL
- ARTIFICIAL FILL (AF) OTHER THAN ROADWAY EMBANKMENT
- INFERRED SOIL BOUNDARY
- INFERRED ROCK LINE
- ALLUVIAL SOIL BOUNDARY
- 25/45 — DIP & DIP DIRECTION OF ROCK STRUCTURES
- SPT 6in SPT TEST BORING
- AUGER BORING
- CORE BORING
- MW — MONITORING WELL
- PIEZOMETER INSTALLATION
- SLOPE INDICATOR INSTALLATION
- CONE PENETROMETER TEST
- SOUNDING ROD
- TEST BORING W/ CORE
- SPT N-VALUE
- REF — SPT REFUSAL

### ABBREVIATIONS

AR - AUGER REFUSAL
BT - BORING TERMINATED
CL - CLAY
CPT - CONE PENETRATION TEST
CSE. - COARSE
DMT - DILATOMETER TEST
DPT - DYNAMIC PENETRATION TEST
e - VOID RATIO
F - FINE
FOSS. - FOSSILIFEROUS
FRAC. - FRACTURED, FRACTURES
FRAGS. - FRAGMENTS
HI. - HIGHLY
MED. - MEDIUM
MICA. - MICACEOUS
MOD. - MODERATELY
NP - NON PLASTIC
ORG. - ORGANIC
PMT - PRESSUREMETER TEST
SAP. - SAPROLITIC
SD. - SAND, SANDY
SL. - SILT, SILTY
SLI. - SLIGHTLY
TCR - TRICONE REFUSAL
w - MOISTURE CONTENT
V - VERY
VST - VANE SHEAR TEST
WEA. - WEATHERED
$\gamma$ - UNIT WEIGHT
$\gamma_d$ - DRY UNIT WEIGHT

SAMPLE ABBREVIATIONS

S - BULK
SS - SPLIT SPOON
ST - SHELBY TUBE
RS - ROCK
RT - RECOMPACTED TRIAXIAL
CBR - CALIFORNIA BEARING RATIO

### EQUIPMENT USED ON SUBJECT PROJECT

DRILL UNITS:
- [ ] MOBILE B-___
- [ ] BK-51
- [ ] CME-45C
- [X] CME-550
- [ ] PORTABLE HOIST
- [ ] _____
- [ ] _____

ADVANCING TOOLS:
- [ ] CLAY BITS
- [ ] 6" CONTINUOUS FLIGHT AUGER
- [X] 8" HOLLOW AUGERS
- [X] HARD FACED FINGER BITS
- [ ] TUNG.-CARBIDE INSERTS
- [X] CASING [X] W/ ADVANCER
- [ ] TRICONE ____" STEEL TEETH
- [ ] TRICONE ____" TUNG.-CARB.
- [X] CORE BIT
- [ ] _____

HAMMER TYPE:
- [X] AUTOMATIC [ ] MANUAL

CORE SIZE:
- [ ] -B_____
- [X] -N CW3
- [ ] -H_____

HAND TOOLS:
- [ ] POST HOLE DIGGER
- [ ] HAND AUGER
- [ ] SOUNDING ROD
- [ ] VANE SHEAR TEST
- [ ] _____

### ROCK DESCRIPTION

HARD ROCK IS NON-COASTAL PLAIN MATERIAL THAT IF TESTED, WOULD YIELD SPT REFUSAL. AN INFERRED ROCK LINE INDICATES THE LEVEL AT WHICH NON-COASTAL PLAIN MATERIAL WOULD YIELD SPT REFUSAL. SPT REFUSAL IS PENETRATION BY A SPLIT SPOON SAMPLER EQUAL TO OR LESS THAN 0.1 FOOT PER 60 BLOWS. IN NON-COASTAL PLAIN MATERIAL, THE TRANSITION BETWEEN SOIL AND ROCK IS OFTEN REPRESENTED BY A ZONE OF WEATHERED ROCK.
ROCK MATERIALS ARE TYPICALLY DIVIDED AS FOLLOWS:

| | |
|---|---|
| WEATHERED ROCK (WR) | NON-COASTAL PLAIN MATERIAL THAT WOULD YIELD SPT N VALUES > 100 BLOWS PER FOOT IF TESTED. |
| CRYSTALLINE ROCK (CR) | FINE TO COARSE GRAIN IGNEOUS AND METAMORPHIC ROCK THAT WOULD YIELD SPT REFUSAL IF TESTED. ROCK TYPE INCLUDES GRANITE, GNEISS, GABBRO, SCHIST, ETC. |
| NON-CRYSTALLINE ROCK (NCR) | FINE TO COARSE GRAIN METAMORPHIC AND NON-COASTAL PLAIN SEDIMENTARY ROCK THAT WOULD YEILD SPT REFUSAL IF TESTED. ROCK TYPE INCLUDES PHYLLITE, SLATE, SANDSTONE, ETC. |
| COASTAL PLAIN SEDIMENTARY ROCK (CP) | COASTAL PLAIN SEDIMENTS CEMENTED INTO ROCK, BUT MAY NOT YIELD SPT REFUSAL. ROCK TYPE INCLUDES LIMESTONE, SANDSTONE, CEMENTED SHELL BEDS, ETC. |

### WEATHERING

| | |
|---|---|
| FRESH | ROCK FRESH, CRYSTALS BRIGHT, FEW JOINTS MAY SHOW SLIGHT STAINING. ROCK RINGS UNDER HAMMER IF CRYSTALLINE. |
| VERY SLIGHT (V SLI.) | ROCK GENERALLY FRESH, JOINTS STAINED, SOME JOINTS MAY SHOW THIN CLAY COATINGS IF OPEN, CRYSTALS ON A BROKEN SPECIMEN FACE SHINE BRIGHTLY. ROCK RINGS UNDER HAMMER BLOWS IF OF A CRYSTALLINE NATURE. |
| SLIGHT (SLI.) | ROCK GENERALLY FRESH, JOINTS STAINED AND DISCOLORATION EXTENDS INTO ROCK UP TO 1 INCH, OPEN JOINTS MAY CONTAIN CLAY. IN GRANITOID ROCKS SOME OCCASIONAL FELDSPAR CRYSTALS ARE DULL AND DISCOLORED, CRYSTALLINE ROCKS RING UNDER HAMMER BLOWS. |
| MODERATE (MOD.) | SIGNIFICANT PORTIONS OF ROCK SHOW DISCOLORATION AND WEATHERING EFFECTS. IN GRANITOID ROCKS, MOST FELDSPARS ARE DULL AND DISCOLORED, SOME SHOW CLAY. ROCK HAS DULL SOUND UNDER HAMMER BLOWS AND SHOWS SIGNIFICANT LOSS OF STRENGTH AS COMPARED WITH FRESH ROCK. |
| MODERATELY SEVERE (MOD. SEV.) | ALL ROCK EXCEPT QUARTZ DISCOLORED OR STAINED. IN GRANITOID ROCKS, ALL FELDSPARS DULL AND DISCOLORED AND A MAJORITY SHOW KAOLINIZATION. ROCK SHOWS SEVERE LOSS OF STRENGTH AND CAN BE EXCAVATED WITH A GEOLOGIST'S PICK. ROCK GIVES "CLUNK" SOUND WHEN STRUCK. *IF TESTED, WOULD YIELD SPT REFUSAL* |
| SEVERE (SEV.) | ALL ROCK EXCEPT QUARTZ DISCOLORED OR STAINED. ROCK FABRIC CLEAR AND EVIDENT BUT REDUCED IN STRENGTH TO STRONG SOIL. IN GRANITOID ROCKS ALL FELDSPARS ARE KAOLINIZED TO SOME EXTENT. SOME FRAGMENTS OF STRONG ROCK USUALLY REMAIN. *IF TESTED, YIELDS SPT N VALUES > 100 BPF* |
| VERY SEVERE (V SEV.) | ALL ROCK EXCEPT QUARTZ DISCOLORED OR STAINED. ROCK FABRIC ELEMENTS ARE DISCERNIBLE BUT THE MASS IS EFFECTIVELY REDUCED TO SOIL STATUS, WITH ONLY FRAGMENTS OF STRONG ROCK REMAINING. SAPROLITE IS AN EXAMPLE OF ROCK WEATHERED TO A DEGREE SUCH THAT ONLY MINOR VESTIGES OF THE ORIGINAL ROCK FABRIC REMAIN. *IF TESTED, YIELDS SPT N VALUES < 100 BPF* |
| COMPLETE | ROCK REDUCED TO SOIL. ROCK FABRIC NOT DISCERNIBLE, OR DISCERNIBLE ONLY IN SMALL AND SCATTERED CONCENTRATIONS. QUARTZ MAY BE PRESENT AS DIKES OR STRINGERS. SAPROLITE IS ALSO AN EXAMPLE. |

### ROCK HARDNESS

| | |
|---|---|
| VERY HARD | CANNOT BE SCRATCHED BY KNIFE OR SHARP PICK. BREAKING OF HAND SPECIMENS REQUIRES SEVERAL HARD BLOWS OF THE GEOLOGIST'S PICK. |
| HARD | CAN BE SCRATCHED BY KNIFE OR PICK ONLY WITH DIFFICULTY. HARD HAMMER BLOWS REQUIRED TO DETACH HAND SPECIMEN. |
| MODERATELY HARD | CAN BE SCRATCHED BY KNIFE OR PICK. GOUGES OR GROOVES TO 0.25 INCHES DEEP CAN BE EXCAVATED BY HARD BLOW OF A GEOLOGIST'S PICK. HAND SPECIMENS CAN BE DETACHED BY MODERATE BLOWS. |
| MEDIUM HARD | CAN BE GROOVED OR GOUGED 0.05 INCHES DEEP BY FIRM PRESSURE OF KNIFE OR PICK POINT. CAN BE EXCAVATED IN SMALL CHIPS TO PIECES 1 INCH MAXIMUM SIZE BY HARD BLOWS OF THE POINT OF A GEOLOGIST'S PICK. |
| SOFT | CAN BE GROVED OR GOUGED READILY BY KNIFE OR PICK. CAN BE EXCAVATED IN FRAGMENTS FROM CHIPS TO SEVERAL INCHES IN SIZE BY MODERATE BLOWS OF A PICK POINT. SMALL, THIN PIECES CAN BE BROKEN BY FINGER PRESSURE. |
| VERY SOFT | CAN BE CARVED WITH KNIFE. CAN BE EXCAVATED READILY WITH POINT OF PICK. PIECES 1 INCH OR MORE IN THICKNESS CAN BE BROKEN BY FINGER PRESSURE. CAN BE SCRATCHED READILY BY FINGERNAIL. |

### FRACTURE SPACING

| TERM | SPACING |
|---|---|
| VERY WIDE | MORE THAN 10 FEET |
| WIDE | 3 TO 10 FEET |
| MODERATELY CLOSE | 1 TO 3 FEET |
| CLOSE | 0.16 TO 1 FEET |
| VERY CLOSE | LESS THAN 0.16 FEET |

### BEDDING

| TERM | THICKNESS |
|---|---|
| VERY THICKLY BEDDED | > 4 FEET |
| THICKLY BEDDED | 1.5 - 4 FEET |
| THINLY BEDDED | 0.16 - 1.5 FEET |
| VERY THINLY BEDDED | 0.03 - 0.16 FEET |
| THICKLY LAMINATED | 0.008 - 0.03 FEET |
| THINLY LAMINATED | < 0.008 FEET |

### INDURATION

FOR SEDIMENTARY ROCKS, INDURATION IS THE HARDENING OF THE MATERIAL BY CEMENTING, HEAT, PRESSURE, ETC.

| | |
|---|---|
| FRIABLE | RUBBING WITH FINGER FREES NUMEROUS GRAINS; GENTLE BLOW BY HAMMER DISINTEGRATES SAMPLE. |
| MODERATELY INDURATED | GRAINS CAN BE SEPARATED FROM SAMPLE WITH STEEL PROBE; BREAKS EASILY WHEN HIT WITH HAMMER. |
| INDURATED | GRAINS ARE DIFFICULT TO SEPARATE WITH STEEL PROBE; DIFFICULT TO BREAK WITH HAMMER. |
| EXTREMELY INDURATED | SHARP HAMMER BLOWS REQUIRED TO BREAK SAMPLE; SAMPLE BREAKS ACROSS GRAINS. |

### TERMS AND DEFINITIONS

ALLUVIUM (ALLUV.) - SOILS THAT HAVE BEEN TRANSPORTED BY WATER.

AQUIFER - A WATER BEARING FORMATION OR STRATA.

ARENACEOUS - APPLIED TO ROCKS THAT HAVE BEEN DERIVED FROM SAND OR THAT CONTAIN SAND.

ARGILLACEOUS - APPLIED TO ALL ROCKS OR SUBSTANCES COMPOSED OF CLAY MINERALS, OR HAVING A NOTABLE PROPORTION OF CLAY IN THEIR COMPOSITION, AS SHALE, SLATE, ETC.

ARTESIAN - GROUND WATER THAT IS UNDER SUFFICIENT PRESSURE TO RISE ABOVE THE LEVEL AT WHICH IT IS ENCOUNTERED, BUT WHICH DOES NOT NECESSARILY RISE TO OR ABOVE THE GROUND SURFACE.

CALCAREOUS (CALC.) - SOILS THAT CONTAIN APPRECIABLE AMOUNTS OF CALCIUM CARBONATE.

COLLUVIUM - ROCK FRAGMENTS MIXED WITH SOIL DEPOSITED BY GRAVITY ON SLOPE OR AT BOTTOM OF SLOPE.

CORE RECOVERY (REC.) - TOTAL LENGTH OF ALL MATERIAL RECOVERED IN THE CORE BARREL DIVIDED BY TOTAL LENGTH OF CORE RUN AND EXPRESSED AS A PERCENTAGE.

DIKE - A TABULAR BODY OF IGNEOUS ROCK THAT CUTS ACROSS THE STRUCTURE OF ADJACENT ROCKS OR CUTS MASSIVE ROCK.

DIP - THE ANGLE AT WHICH A STRATUM OR ANY PLANAR FEATURE IS INCLINED FROM THE HORIZONTAL.

DIP DIRECTION (DIP AZIMUTH) - THE DIRECTION OR BEARING OF THE HORIZONTAL TRACE OF THE LINE OF DIP, MEASURED CLOCKWISE FROM NORTH.

FAULT - A FRACTURE OR FRACTURE ZONE ALONG WHICH THERE HAS BEEN DISPLACEMENT OF THE SIDES RELATIVE TO ONE ANOTHER PARALLEL TO THE FRACTURE.

FISSILE - A PROPERTY OF SPLITTING ALONG CLOSELY SPACED PARALLEL PLANES.

FLOAT - ROCK FRAGMENTS ON SURFACE NEAR THEIR ORIGINAL POSITION AND DISLODGED FROM PARENT MATERIAL.

FLOOD PLAIN (FP) - LAND BORDERING A STREAM, BUILT OF SEDIMENTS DEPOSITED BY THE STREAM.

FORMATION (FM.) - A MAPPABLE GEOLOGIC UNIT THAT CAN BE RECOGNIZED AND TRACED IN THE FIELD.

JOINT - FRACTURE IN ROCK ALONG WHICH NO APPRECIABLE MOVEMENT HAS OCCURRED.

LEDGE - A SHELF-LIKE RIDGE OR PROJECTION OF ROCK WHOSE THICKNESS IS SMALL COMPARED TO ITS LATERAL EXTENT.

LENS - A BODY OF SOIL OR ROCK THAT THINS OUT IN ONE OR MORE DIRECTIONS.

MOTTLED (MOT.) - IRREGULARLY MARKED WITH SPOTS OF DIFFERENT COLORS. MOTTLING IN SOILS USUALLY INDICATES POOR AERATION AND LACK OF GOOD DRAINAGE.

PERCHED WATER - WATER MAINTAINED ABOVE THE NORMAL GROUND WATER LEVEL BY THE PRESENCE OF AN INTERVENING IMPERVIOUS STRATUM.

RESIDUAL (RES.) SOIL - SOIL FORMED IN PLACE BY THE WEATHERING OF ROCK.

ROCK QUALITY DESIGNATION (RQD) - A MEASURE OF ROCK QUALITY DESCRIBED BY TOTAL LENGTH OF ROCK SEGMENTS EQUAL TO OR GREATER THAN 4 INCHES DIVIDED BY THE TOTAL LENGTH OF CORE RUN AND EXPRESSED AS A PERCENTAGE.

SAPROLITE (SAP.) - RESIDUAL SOIL THAT RETAINS THE RELIC STRUCTURE OR FABRIC OF THE PARENT ROCK.

SILL - AN INTRUSIVE BODY OF IGNEOUS ROCK OF APPROXIMATELY UNIFORM THICKNESS AND RELATIVELY THIN COMPARED WITH ITS LATERAL EXTENT, THAT HAS BEEN EMPLACED PARALLEL TO THE BEDDING OR SCHISTOSITY OF THE INTRUDED ROCKS.

SLICKENSIDE - POLISHED AND STRIATED SURFACE THAT RESULTS FROM FRICTION ALONG A FAULT OR SLIP PLANE.

STANDARD PENETRATION TEST (PENETRATION RESISTANCE) (SPT) - NUMBER OF BLOWS (N OR BPF) OF A 140 LB. HAMMER FALLING 30 INCHES REQUIRED TO PRODUCE A PENETRATION OF 1 FOOT INTO SOIL WITH A 2 INCH OUTSIDE DIAMETER SPLIT SPOON SAMPLER. SPT REFUSAL IS PENETRATION EQUAL TO OR LESS THAN 0.1 FOOT PER 60 BLOWS.

STRATA CORE RECOVERY (SREC.) - TOTAL LENGTH OF STRATA MATERIAL RECOVERED DIVIDED BY TOTAL LENGTH OF STRATUM AND EXPRESSED AS A PERCENTAGE.

STRATA ROCK QUALITY DESIGNATION (SRQD) - A MEASURE OF ROCK QUALITY DESCRIBED BY TOTAL LENGTH OF ROCK SEGMENTS WITHIN A STRATUM EQUAL TO OR GREATER THAN 4 INCHES DIVIDED BY THE TOTAL LENGTH OF STRATA AND EXPRESSED AS A PERCENTAGE.

TOPSOIL (TS.) - SURFACE SOILS USUALLY CONTAINING ORGANIC MATTER.

BENCH MARK: 63-0239-3: -BL- STATION 11+59.46

ELEVATION: 180.59 FT.

NOTES:

REVISED 09/23/09

| 0 | 50 | 100 |
|---|---|---|
| FEET | | |

| PROJECT REFERENCE NO. | SHEET |
|---|---|
| 45350.1.14 (BD-5104M) | 3 |

**SITE PLAN**

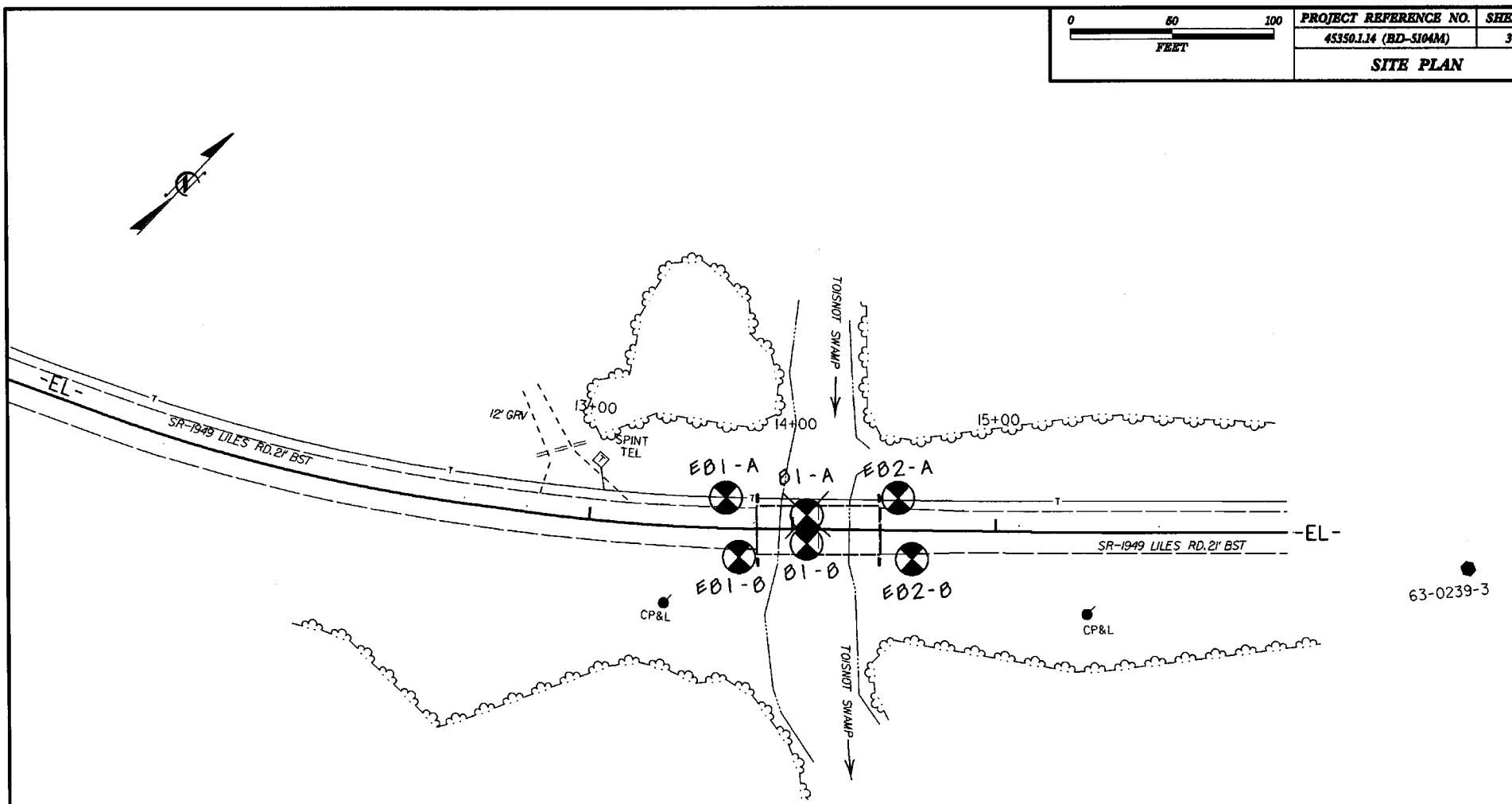

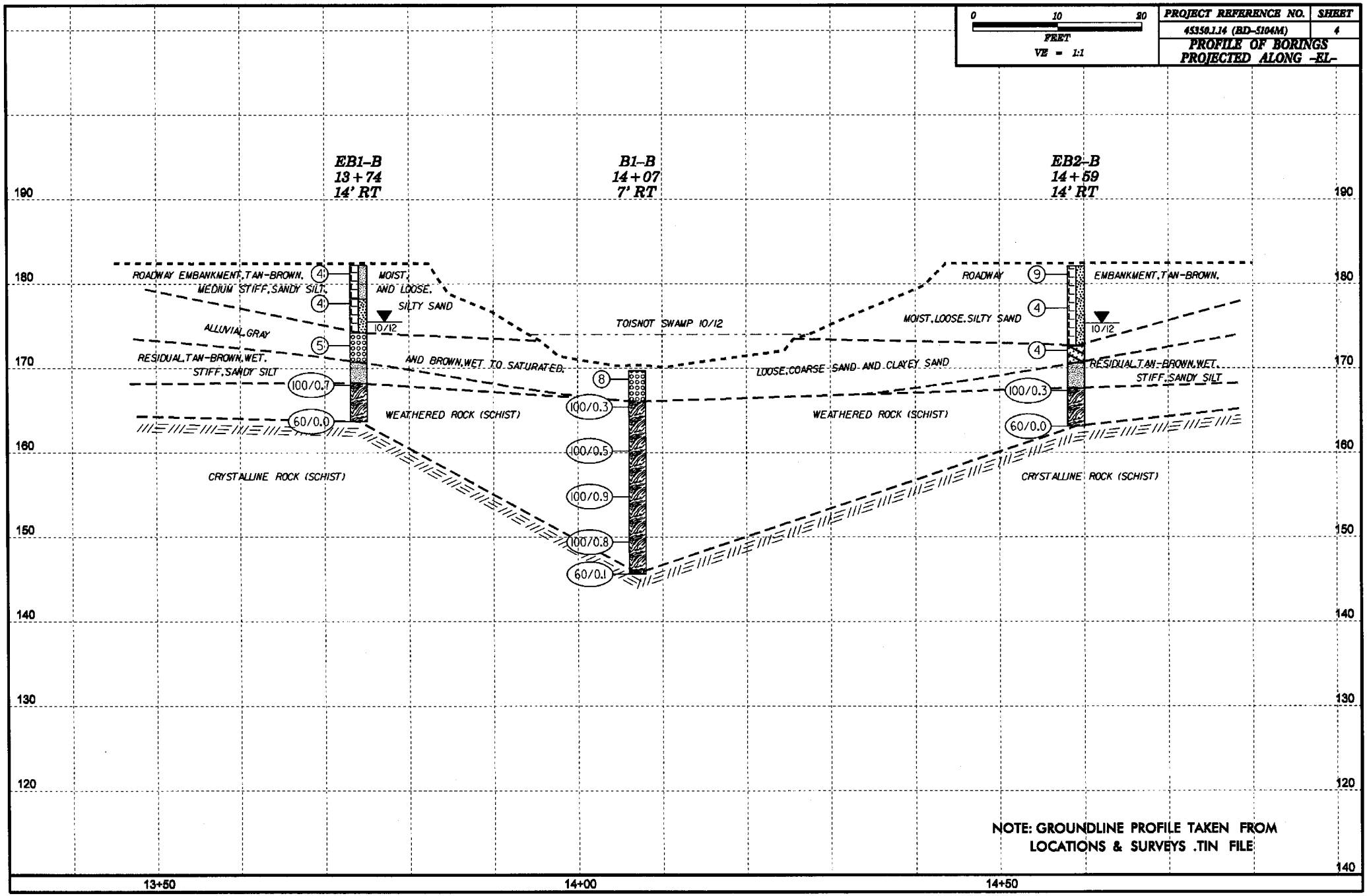


NOTE: GROUNDLINE PROFILE TAKEN FROM LOCATIONS & SURVEYS .TIN FILE

HORIZ. SCALE (FEET) 0 10 20

VERT. 1:1

## CROSS SECTION THROUGH END BENT 1

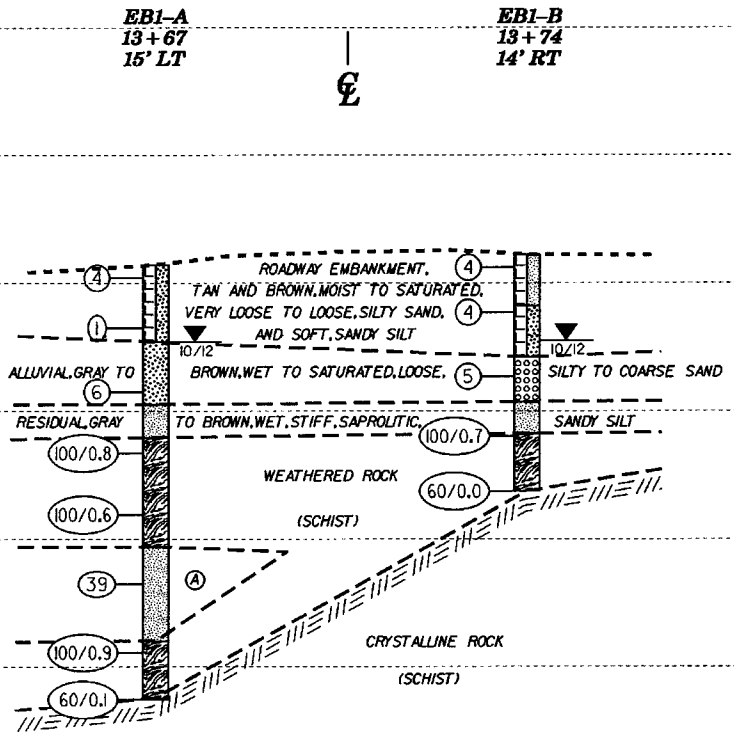


(A) RESIDUAL, DARK RED, MOIST, HARD, SAPROLITIC, SANDY SILT

SKEW = 90°

HORIZ. SCALE (FEET) 0 10 20

VERT. 1:1

## CROSS SECTION THROUGH BENT 1

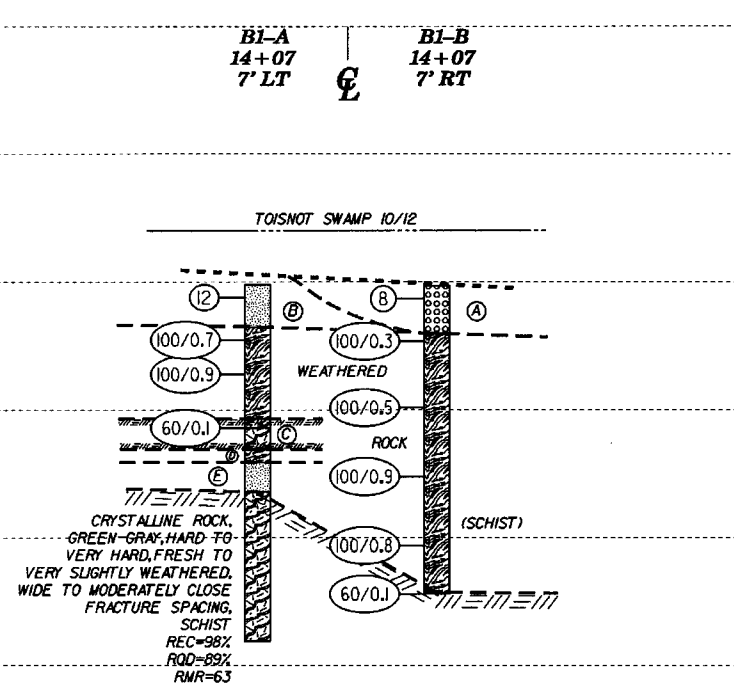


(A) ALLUVIAL, BLACK AND GRAY, SATURATED, LOOSE, COARSE SAND AND GRAVEL

(B) RESIDUAL, BROWN AND GRAY, SATURATED, STIFF, SANDY SILT

(C) CRYSTALLINE ROCK, GREEN-GRAY, MODERATELY TO SLIGHTLY WEATHERED; CLOSE TO MODERATELY CLOSE FRACTURE SPACING, SCHIST
REC=75%
RQD=53%
RMR=53

(D) WEATHERED ROCK (SCHIST)

(E) RESIDUAL, BROWN AND GRAY, MOIST, HARD, SANDY SILT

SKEW = 90°

| PROJECT REFERENCE NO. | SHEET |
|---|---|
| 45356.1.14 (BD-5104M) | 5 |

HORIZ. SCALE (FEET) 0 10 20

VE = 1:1

# CROSS SECTION THROUGH END BENT 2

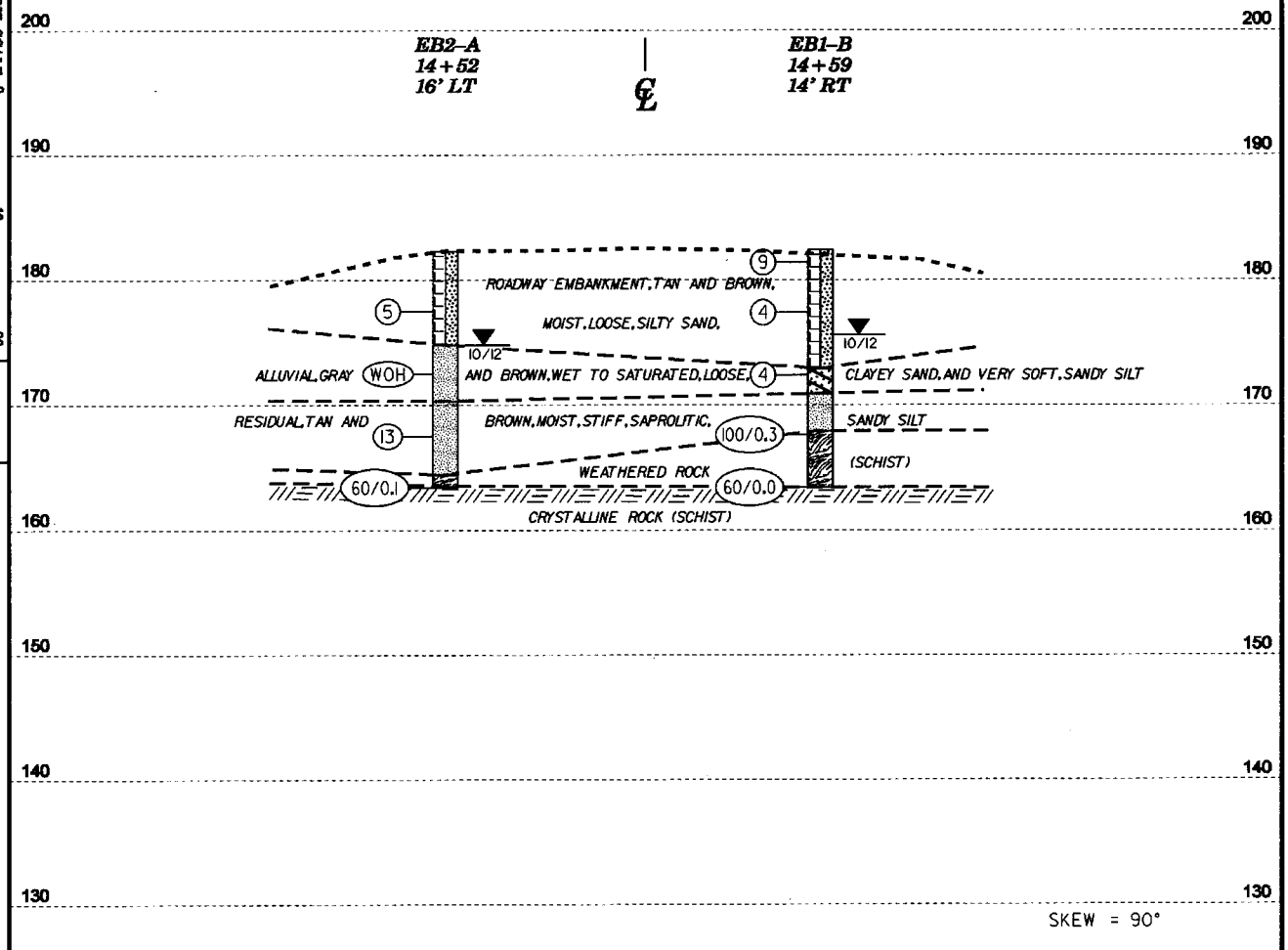


| PROJECT REFERENCE NO. | SHEET |
|---|---|
| 45950.114 (BD-5104M) | 6 |

# NCDOT GEOTECHNICAL ENGINEERING UNIT
# BORELOG REPORT

| | | | | |
|---|---|---|---|---|
| WBS 45350.1.14 | TIP BD-5104M | COUNTY NASH | GEOLOGIST Mohs, N. D. | |
| SITE DESCRIPTION BRIDGE NO. 239 ON SR 1949 OVER TOISNOT SWAMP | | | | GROUND WTR (ft) |
| BORING NO. EB1-A | STATION 13+67 | OFFSET 15 ft LT | ALIGNMENT -EL- | 0 HR. 6.2 |
| COLLAR ELEV. 181.4 ft | TOTAL DEPTH 34.0 ft | NORTHING 764,957 | EASTING 2,278,745 | 24 HR. 6.0 |
| DRILL RIG/HAMMER EFF./DATE RFO0074 CME-55 92% 07/12/2011 | | DRILL METHOD H.S. Augers | HAMMER TYPE Automatic | |
| DRILLER Conley, H. R. | START DATE 10/11/12 | COMP. DATE 10/11/12 | SURFACE WATER DEPTH N/A | |

| ELEV (ft) | DRIVE ELEV (ft) | DEPTH (ft) | BLOW COUNT 0.5ft | 0.5ft | 0.5ft | BLOWS PER FOOT 0 25 50 75 100 | SAMP. NO. | MOI | LOG | SOIL AND ROCK DESCRIPTION |
|---|---|---|---|---|---|---|---|---|---|---|
| | | | | | | | | | | ELEV. (ft) DEPTH (ft) |
| 185 | | | | | | | | | | |
| | 181.4 | 0.0 | 1 | 2 | 2 | 4 | | M | | 181.4 GROUND SURFACE 0.0<br>ROADWAY EMBANKMENT<br>BROWN, SILTY SAND |
| 180 | 177.5 | 3.9 | WOH | WOH | 1 | 1 | | Sat. | | |
| 175 | 172.5 | 8.9 | 1 | 2 | 4 | 6 | | Sat. | | 175.4 6.0<br>ALLUVIAL<br>GRAY, SILTY SAND WITH GRAVEL<br>170.5 10.9<br>RESIDUAL<br>GRAY, SAPROLITIC, SANDY SILT |
| 170 | 167.5 | 13.9 | 30 | 70/0.3 | | 100/0.8 | | | | 167.9 13.5<br>WEATHERED ROCK<br>(SCHIST) |
| 165 | 162.5 | 18.9 | 70 | 30/0.1 | | 100/0.6 | | | | |
| 160 | 157.5 | 23.9 | 12 | 20 | 19 | 39 | | M | | 159.4 22.0<br>RESIDUAL<br>DARK RED, SAPROLITIC, SANDY SILT |
| 155 | 152.5 | 28.9 | 18 | 33 | 87/0.4 | 100/0.9 | | | | 152.0 29.4<br>WEATHERED ROCK<br>(SCHIST) |
| 150 | 147.5 | 33.9 | 80/0.1 | | | 60/0.1 | | | | 147.5 33.9<br>147.4 34.0<br>CRYSTALLINE ROCK<br>(SCHIST)<br>Boring Terminated WITH STANDARD PENETRATION TEST REFUSAL at Elevation 147.4 ft IN CRYSTALLINE ROCK (SCHIST) |

| | | | | |
|---|---|---|---|---|
| WBS 45350.1.14 | TIP BD-5104M | COUNTY NASH | GEOLOGIST Oti, O. B. | |
| SITE DESCRIPTION BRIDGE NO. 239 ON SR 1949 OVER TOISNOT SWAMP | | | | GROUND WTR (ft) |
| BORING NO. EB1-B | STATION 13+74 | OFFSET 14 ft RT | ALIGNMENT -EL- | 0 HR. 13.6 |
| COLLAR ELEV. 182.2 ft | TOTAL DEPTH 18.5 ft | NORTHING 764,940 | EASTING 2,278,770 | 24 HR. 6.7 |
| DRILL RIG/HAMMER EFF./DATE RFO0074 CME-55 92% 07/12/2011 | | DRILL METHOD H.S. Augers | HAMMER TYPE Automatic | |
| DRILLER Conley, H. R. | START DATE 10/10/12 | COMP. DATE 10/10/12 | SURFACE WATER DEPTH N/A | |

| ELEV (ft) | DRIVE ELEV (ft) | DEPTH (ft) | BLOW COUNT 0.5ft | 0.5ft | 0.5ft | BLOWS PER FOOT 0 25 50 75 100 | SAMP. NO. | MOI | LOG | SOIL AND ROCK DESCRIPTION |
|---|---|---|---|---|---|---|---|---|---|---|
| 185 | | | | | | | | | | |
| | 182.2 | 0.0 | 3 | 2 | 2 | 4 | | M | | 182.2 GROUND SURFACE 0.0<br>ROADWAY EMBANKMENT<br>TAN-BROWN, SANDY SILT |
| 180 | 178.7 | 3.5 | 1 | 2 | 2 | 4 | | M | | 178.2 4.0<br>TAN-BROWN, SILTY SAND |
| 175 | 173.7 | 8.5 | 2 | 3 | 2 | 5 | | W | | 174.2 8.0<br>ALLUVIAL<br>GRAY-BROWN, COARSE SAND |
| 170 | 168.7 | 13.5 | 4 | 100/0.2 | | 100/0.7 | | | | 170.7 11.5<br>RESIDUAL<br>TAN-BROWN, SANDY SILT<br>168.2 14.0<br>WEATHERED ROCK<br>(SCHIST) |
| 165 | 163.7 | 18.5 | 60/0.0 | | | 60/0.0 | | | | 163.7 18.5<br>Boring Terminated WITH STANDARD PENETRATION TEST REFUSAL at Elevation 163.7 ft ON CRYSTALLINE ROCK (SCHIST) |

NCDOT BORE DOUBLE B5104M_GEO_BH_BRDG239.GPJ NC_DOT.GDT 10/23/12

## NCDOT GEOTECHNICAL ENGINEERING UNIT
## BORELOG REPORT

| | | | | |
|---|---|---|---|---|
| WBS 45350.1.14 | TIP BD-5104M | COUNTY NASH | GEOLOGIST Mohs, N. D. | |
| SITE DESCRIPTION BRIDGE NO. 239 ON SR 1949 OVER TOISNOT SWAMP | | | | GROUND WTR (ft) |
| BORING NO. B1-A | STATION 14+07 | OFFSET 7 ft LT | ALIGNMENT -EL- | 0 HR. N/A |
| COLLAR ELEV. 169.8 ft | TOTAL DEPTH 27.9 ft | NORTHING 764,978 | EASTING 2,278,780 | 24 HR. N/A |
| DRILL RIG/HAMMER EFF./DATE RFO0074 CME-55 92% 07/12/2011 | | DRILL METHOD NW Casing W/SPT & Core | HAMMER TYPE Automatic | |
| DRILLER Conley, H. R. | START DATE 10/15/12 | COMP. DATE 10/15/12 | SURFACE WATER DEPTH 4.2ft | |

| ELEV (ft) | DRIVE ELEV (ft) | DEPTH (ft) | BLOW COUNT 0.5ft | 0.5ft | 0.5ft | BLOWS PER FOOT 0 25 50 75 100 | SAMP. NO. | WOH | LOG | SOIL AND ROCK DESCRIPTION / WATER SURFACE (10/15/12) | ELEV. (ft) | DEPTH (ft) |
|---|---|---|---|---|---|---|---|---|---|---|---|---|
| 170 | | | | | | | | | | GROUND SURFACE | 169.8 | 0.0 |
| | 169.8 | 0.0 | 17 | 9 | 3 | 12 | | Sat. | | RESIDUAL<br>BROWN AND GRAY, SANDY SILT | | |
| | 166.2 | 3.6 | | | | | | | | | 166.5 | 3.3 |
| 165 | | | 34 | 66/0.2 | | 100/0.7 | | | | WEATHERED ROCK<br>(SCHIST) | | |
| | 163.7 | 6.1 | 77 | 23/0.4 | | 100/0.9 | | | | | | |
| 160 | | | | | | | | | | | 159.3 | 10.5 |
| | 158.7 | 11.1 | 60/0.1 | | | 60/0.1 | | | | CRYSTALLINE ROCK<br>(SCHIST) | 158.6 | 11.2 |
| | | | | | | | | | | GREEN-GRAY, HARD, MODERATELY TO SLIGHTLY WEATHERED, CLOSE TO MODERATELY CLOSE FRACTURE SPACING, SCHIST<br>REC=76%<br>RQD=53%<br>RMR=53 | 155.9 | 12.9<br>13.9 |
| 155 | | | | | | | | | | | 153.6 | 16.2 |
| | | | | | | | | | | WEATHERED ROCK<br>(SCHIST) | | |
| 150 | | | | | | | RS-1 | | | RESIDUAL<br>BROWN AND GRAY, SANDY SILT | | |
| 145 | | | | | | | RS-2 | | | CRYSTALLINE ROCK<br>GREEN-GRAY, HARD TO VERY HARD, FRESH TO VERY SLIGHTLY WEATHERED, WIDE TO MODERATELY CLOSE FRACTURE SPACING, SCHIST<br>REC=98%<br>RQD=89%<br>RMR=63 | 141.9 | 27.9 |
| | | | | | | | | | | Boring Terminated at Elevation 141.9 ft IN CRYSTALLINE ROCK (SCHIST) | | |

## NCDOT GEOTECHNICAL ENGINEERING UNIT
## CORE BORING REPORT

| | | | | |
|---|---|---|---|---|
| WBS 45350.1.14 | TIP BD-5104M | COUNTY NASH | GEOLOGIST Mohs, N. D. | |
| SITE DESCRIPTION BRIDGE NO. 239 ON SR 1949 OVER TOISNOT SWAMP | | | | GROUND WTR (ft) |
| BORING NO. B1-A | STATION 14+07 | OFFSET 7 ft LT | ALIGNMENT -EL- | 0 HR. N/A |
| COLLAR ELEV. 169.8 ft | TOTAL DEPTH 27.9 ft | NORTHING 764,978 | EASTING 2,278,780 | 24 HR. N/A |
| DRILL RIG/HAMMER EFF./DATE RFO0074 CME-55 92% 07/12/2011 | | DRILL METHOD NW Casing W/SPT & Core | HAMMER TYPE Automatic | |
| DRILLER Conley, H. R. | START DATE 10/15/12 | COMP. DATE 10/15/12 | SURFACE WATER DEPTH 4.2ft | |
| CORE SIZE NWC3 | TOTAL RUN 14.4 ft | | | |

| ELEV (ft) | RUN ELEV (ft) | DEPTH (ft) | RUN (ft) | DRILL RATE (Min/ft) | RUN REC. (ft) % | RUN RQD (ft) % | SAMP. NO. | STRATA REC. (ft) % | STRATA RQD (ft) % | LOG | DESCRIPTION AND REMARKS / ELEV. (ft) | DEPTH (ft) |
|---|---|---|---|---|---|---|---|---|---|---|---|---|
| 158.6 | | | | | | | | | | | Begin Coring @ 11.2 ft | |
| | 158.6 | 11.2 | 1.7 | 1:22/1.0 | (1.3) | (0.9) | | (1.3) | (0.9) | | 158.6 | 11.2 |
| | 156.9 | 12.9 | | :45/0.7 | 76% | 53% | | 76% | 53% | | GREEN-GRAY, HARD, MODERATELY TO SLIGHTLY WEATHERED, CLOSE TO MODERATELY CLOSE FRACTURE SPACING, SCHIST<br>REC=76%<br>RQD=53%<br>RMR=53 | |
| | 155.9 | 13.9 | 1.0 | 1:46/1.0 | | | | | | | 155.9 | 13.9 |
| 155 | | | | 1:33/1.0 | (1.0) | | | | | | | |
| | | | | 1:15/1.0 | 100% | | | | | | 153.6 | 16.2 |
| | 153.6 | 16.2 | 1.7 | 1:26/1.0 | (1.7) | (1.5) | | (11.5) | (10.2) | | WEATHERED ROCK<br>(SCHIST) | |
| | 151.9 | 17.9 | | 1:06/1.0 | 100% | 88% | | 98% | 87% | | | |
| | | | 5.0 | 1:23/1.0 | | | | | | | RESIDUAL<br>BROWN AND GRAY, SANDY SILT | |
| 150 | | | | 1:03/1.0 | (4.8) | (4.3) | | | | | | |
| | | | | 1:00/1.0 | 96% | 86% | | | | | | |
| | | | | 1:03/1.0 | | | RS-1 | | | | | |
| | 148.9 | 22.9 | | :54/1.0 | | | | | | | CRYSTALLINE ROCK<br>GREEN-GRAY, HARD TO VERY HARD, FRESH TO VERY SLIGHTLY WEATHERED, WIDE TO MODERATELY CLOSE FRACTURE SPACING, SCHIST<br>REC=98%<br>RQD=89%<br>RMR=63 | |
| | | | 5.0 | 1:14/1.0 | (5.0) | (4.4) | | | | | | |
| 145 | | | | 1:35/1.0 | 100% | 88% | | | | | | |
| | | | | 1:15/1.0 | | | | | | | | |
| | | | | 1:23/1.0 | | | RS-2 | | | | | |
| | 141.9 | 27.9 | | 1:33/1.0 | | | | | | | 141.9 | 27.9 |
| | | | | | | | | | | | Boring Terminated at Elevation 141.9 ft IN CRYSTALLINE ROCK (SCHIST) | |

NCDOT BORE DOUBLE_B5104M_GEO_BH_BRDG239.GPJ_NC_DOT.GDT 12/4/12

| | | | | |
|---|---|---|---|---|
| **WBS** 45350.1.14 | **TIP** BD-5104M | **COUNTY** NASH | | **GEOLOGIST** Oti, O. B. |
| **SITE DESCRIPTION** BRIDGE NO. 239 ON SR 1949 OVER TOISNOT SWAMP | | | | **GROUND WTR (ft)** |
| **BORING NO.** B1-B | **STATION** 14+07 | **OFFSET** 7 ft RT | **ALIGNMENT** -EL- | **0 HR.** N/A |
| **COLLAR ELEV.** 169.7 ft | **TOTAL DEPTH** 24.1 ft | **NORTHING** 764,967 | **EASTING** 2,278,790 | **24 HR.** N/A |
| **DRILL RIG/HAMMER EFF./DATE** RFO0074 CME-55 92% 07/12/2011 | | **DRILL METHOD** NW Casing w/ Advancer | | **HAMMER TYPE** Automatic |
| **DRILLER** Conley, H. R. | **START DATE** 10/16/12 | **COMP. DATE** 10/16/12 | | **SURFACE WATER DEPTH** 4.3ft |

| ELEV (ft) | DRIVE ELEV (ft) | DEPTH (ft) | BLOW COUNT 0.5ft | 0.5ft | 0.5ft | BLOWS PER FOOT 0 25 50 75 100 | SAMP. NO. | WOH | LOG | SOIL AND ROCK DESCRIPTION / WATER SURFACE (10/16/12) |
|---|---|---|---|---|---|---|---|---|---|---|
| 170 | 169.7 | 0.0 | 1 | 4 | 4 | 8 | | Sat. | | 169.7 GROUND SURFACE 0.0 |
| | 165.7 | 4.0 | 100/0.3 | | | 100/0.3 | | | | ALLUVIAL<br>BLACK AND GRAY, COARSE SAND AND GRAVEL |
| 165 | | | | | | | | | | 166.0 3.7 |
| | 160.7 | 9.0 | 100/0.5 | | | 100/0.5 | | | | WEATHERED ROCK<br>(SCHIST) |
| 160 | | | | | | | | | | |
| | 155.7 | 14.0 | 70 | 30/0.4 | | 100/0.9 | | | | |
| 155 | | | | | | | | | | |
| | 150.7 | 19.0 | 30 | 37 | 63/0.3 | 100/0.6 | | | | |
| 150 | | | | | | | | | | |
| | 145.7 | 24.0 | 60/0.1 | | | 60/0.1 | | | | 145.7 24.0<br>145.6 24.1<br>CRYSTALLINE ROCK<br>(SCHIST)<br>Boring Terminated WITH STANDARD PENETRATION TEST REFUSAL at Elevation 145.6 ft IN CRYSTALLINE ROCK (SCHIST) |

# NCDOT GEOTECHNICAL ENGINEERING UNIT
# BORELOG REPORT

| | | | | |
|---|---|---|---|---|
| WBS 45350.1.14 | TIP BD-5104M | COUNTY NASH | GEOLOGIST Mohs, N. D. | |
| SITE DESCRIPTION BRIDGE NO. 239 ON SR 1949 OVER TOISNOT SWAMP | | | | GROUND WTR (ft) |
| BORING NO. EB2-A | STATION 14+52 | OFFSET 16 ft LT | ALIGNMENT -EL- | 0 HR. 11.5 |
| COLLAR ELEV. 182.3 ft | TOTAL DEPTH 18.9 ft | NORTHING 765,014 | EASTING 2,278,808 | 24 HR. 7.5 |
| DRILL RIG/HAMMER EFF./DATE RFO0074 CME-55 92% 07/12/2011 | | DRILL METHOD H.S. Augers | HAMMER TYPE Automatic | |
| DRILLER Conley, H. R. | START DATE 10/11/12 | COMP. DATE 10/11/12 | SURFACE WATER DEPTH N/A | |

| ELEV (ft) | DRIVE ELEV (ft) | DEPTH (ft) | BLOW COUNT 0.5ft | 0.5ft | 0.5ft | BLOWS PER FOOT 0 25 50 75 100 | SAMP. NO. | MOI | LOG | SOIL AND ROCK DESCRIPTION ELEV. (ft) / DEPTH (ft) |
|---|---|---|---|---|---|---|---|---|---|---|
| 185 | | | | | | | | | | |
| | 182.3 | 0.0 | | | | | | | | 182.3 GROUND SURFACE 0.0 |
| 180 | | | | | | | | M | | ROADWAY EMBANKMENT BROWN, SILTY SAND |
| | 178.5 | 3.8 | 2 | 3 | 2 | 5 | | | | |
| 175 | | | | | | | | | | 174.8 7.5 |
| | 173.5 | 8.8 | WOH | WOH | WOH | 0 | | Sat. | | ALLUVIAL GRAY, SANDY SILT |
| 170 | | | | | | | | | | 170.3 12.0 |
| | 168.5 | 13.8 | 13 | 6 | 7 | 13 | | M | | RESIDUAL BROWN, SAPROLITIC, SANDY SILT |
| 165 | | | | | | | | | | 164.4 17.9 |
| | 163.5 | 18.8 | 50/0.1 | | | 50/0.1 | | | | 163.5 18.8 WEATHERED ROCK (SCHIST) |
| | | | | | | | | | | 163.4 18.9 CRYSTALLINE ROCK (SCHIST) |
| | | | | | | | | | | Boring Terminated WITH STANDARD PENETRATION TEST REFUSAL at Elevation 163.4 ft IN CRYSTALLINE ROCK (SCHIST) |

| | | | | |
|---|---|---|---|---|
| WBS 45350.1.14 | TIP BD-5104M | COUNTY NASH | GEOLOGIST Oti, O. B. | |
| SITE DESCRIPTION BRIDGE NO. 239 ON SR 1949 OVER TOISNOT SWAMP | | | | GROUND WTR (ft) |
| BORING NO. EB2-B | STATION 14+59 | OFFSET 14 ft RT | ALIGNMENT -EL- | 0 HR. 13.3 |
| COLLAR ELEV. 182.4 ft | TOTAL DEPTH 19.0 ft | NORTHING 764,997 | EASTING 2,278,833 | 24 HR. 6.8 |
| DRILL RIG/HAMMER EFF./DATE RFO0074 CME-55 92% 07/12/2011 | | DRILL METHOD H.S. Augers | HAMMER TYPE Automatic | |
| DRILLER Conley, H. R. | START DATE 10/10/12 | COMP. DATE 10/10/12 | SURFACE WATER DEPTH N/A | |

| ELEV (ft) | DRIVE ELEV (ft) | DEPTH (ft) | BLOW COUNT 0.5ft | 0.5ft | 0.5ft | BLOWS PER FOOT 0 25 50 75 100 | SAMP. NO. | MOI | LOG | SOIL AND ROCK DESCRIPTION |
|---|---|---|---|---|---|---|---|---|---|---|
| 185 | | | | | | | | | | |
| | 182.4 | 0.0 | | | | | | | | 182.4 GROUND SURFACE 0.0 |
| 180 | | | 4 | 4 | 5 | 9 | | M | | ROADWAY EMBANKMENT TAN-BROWN, SILTY SAND |
| | 178.4 | 4.0 | 1 | 2 | 2 | 4 | | M | | |
| 175 | | | | | | | | | | 172.9 9.5 |
| | 173.4 | 9.0 | 1 | 2 | 2 | 4 | | W | | ALLUVIAL 170.9 GRAY-BROWN, CLAYEY SAND 11.5 |
| 170 | | | | | | | | | | RESIDUAL 167.9 TAN-BROWN, SANDY SILT 14.5 |
| | 168.4 | 14.0 | 6 | 100/0.3 | | 100/0.3 | | | | WEATHERED ROCK (SCHIST) |
| 165 | | | | | | | | | | 163.4 19.0 |
| | 163.4 | 19.0 | 50/0.0 | | | 50/0.0 | | | | Boring Terminated WITH STANDARD PENETRATION TEST REFUSAL at Elevation 163.4 ft ON CRYSTALLINE ROCK (SCHIST) |

NCDOT BORE DOUBLE B5104M_GEO_BH_BRDG239.GPJ NC_DOT.GDT 12/4/12