NOTES:

CONCRETE REPAIR MAY BE SUBSTITUTED IN LIEU OF SHOTCRETE REPAIR WITH THE APPROVAL OF THE ENGINEER.

FOR CONCRETE REPAIR, SEE SPECIAL PROVISIONS.

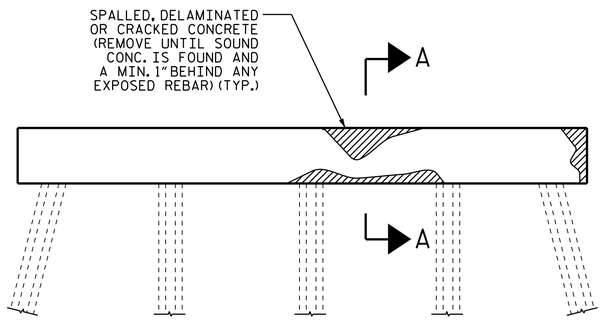

BENT CAP REPAIRS

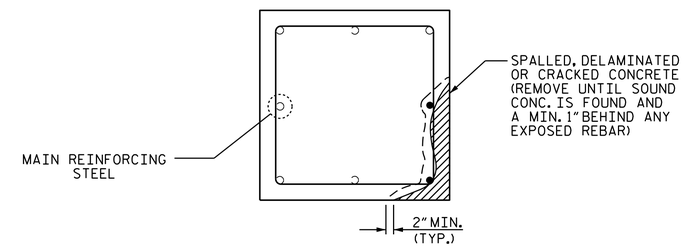

PLAN OF COLUMN

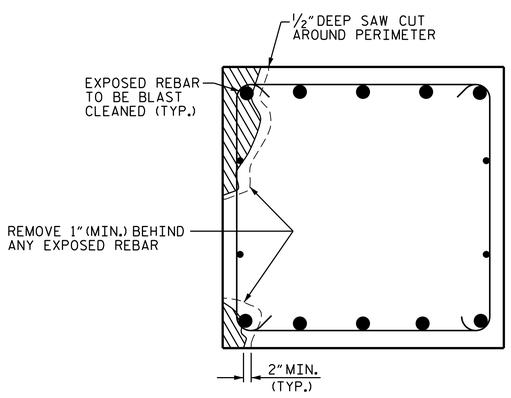

SECTION A-A

CAP REPAIR

* DUE TO LACK OF CONFINEMENT STEEL, REPAIR LENGTH SHALL NOT EXCEED 10'-0" AT ONE TIME, UNLESS APPROVED BY THE ENGINEER.

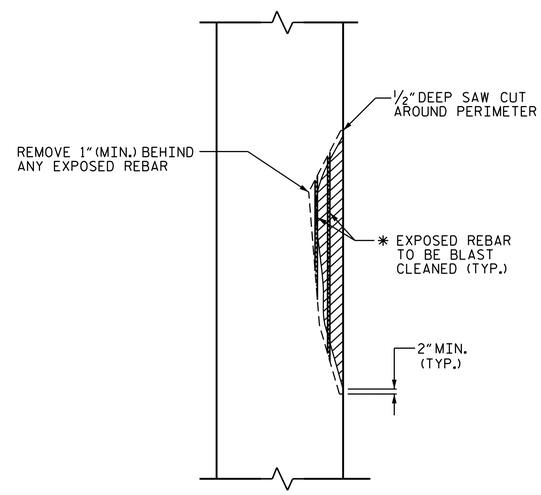

ELEVATION OF COLUMN

COLUMN REPAIR

PROJECT NO. 15BPR.4

NASH COUNTY

BRIDGE NO. 94

NORTH CAROLINA PROFESSIONAL SEAL 030024 ENGINEER ASTER G. ABRAHA

DocuSigned by: Aster Abraha 2/12/2018

STATE OF NORTH CAROLINA
DEPARTMENT OF TRANSPORTATION
RALEIGH

SUBSTRUCTURE

TYPICAL CAP AND COLUMN REPAIR DETAILS

DOCUMENT NOT CONSIDERED FINAL UNLESS ALL SIGNATURES COMPLETED

REVISIONS							
NO.	BY:	DATE:	NO.	BY:	DATE:	SHEET NO.	S-60
1			3			TOTAL SHEETS	61
2			4				

DRAWN BY : S. T. SANDOR DATE : 09/2017
CHECKED BY : A. G. ABRAHA DATE : 10/2017

12-FEB-2018 14:48
R:\Structures\Plans\404_076_15BPR_SMU_CapRepair_630094_S53.dgn
aabraha