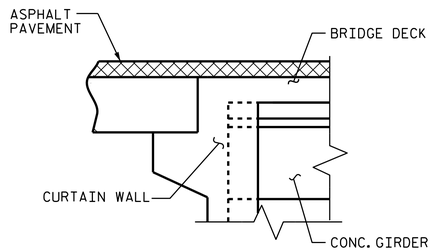

EXISTING JOINT

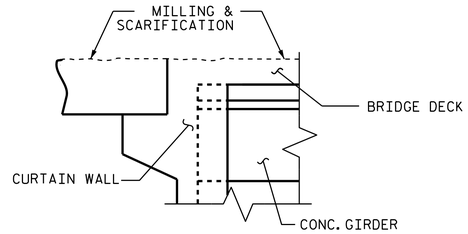

EXISTING JOINT

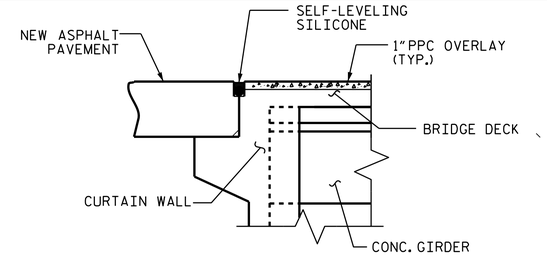

PROPOSED JOINT

JOINT INSTALLATION SEQUENCE AT END BENTS

(SECTION B-B)

NOTES:

CONTRACTOR SHALL FIELD VERIFY THE EXISTING FORMED OPENING PRIOR TO OBTAINING JOINT MATERIAL.

UNLESS NOTED OTHERWISE RETAIN ALL EXISTING REINFORCING STEEL. CLEAN AND REPAIR AS NEEDED.

ALL EXPOSED ENDS OF CUT BARS SHALL BE COATED WITH EPOXY PRIOR TO THE NEW JOINT MATERIAL INSTALLATION.

THE CONTRACTOR WILL NOT BE PERMITTED TO FORM THE JOINTS IN LIEU OF SAWING THE JOINT.

FOR SILICONE JOINT SEALANT, SEE SPECIAL PROVISIONS.

SILICONE JOINT SEALANT AND BACKER ROD SHALL BE INSTALLED AS PER MANUFACTURER'S RECOMMENDATION.

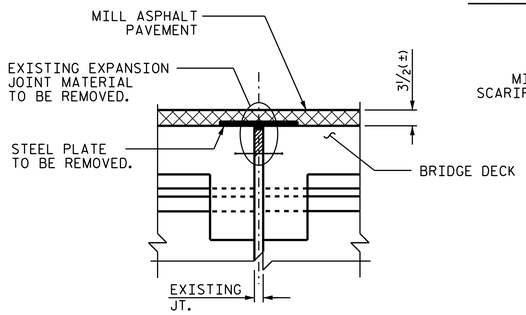

EXISTING JOINT

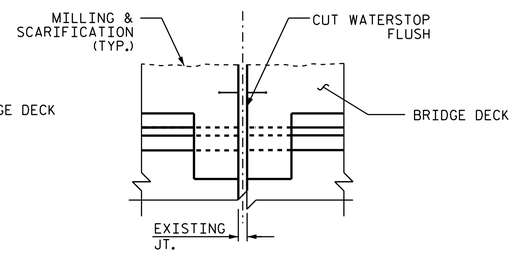

MINIMUM EXISTING JOINT DEMOLITION

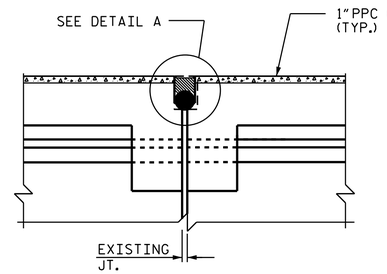

PROPOSED JOINT

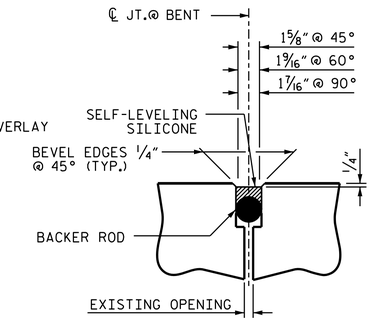

DETAIL A

(PROPOSED)

SILICONE JOINT SEALANT
LIN. FT
1061.0

JOINT INSTALLATION SEQUENCE AT BENTS

(SECTION A-A)

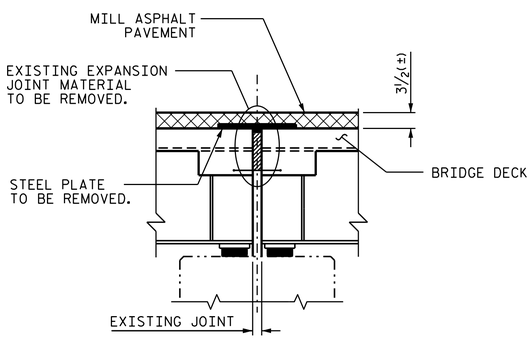

EXISTING JOINT

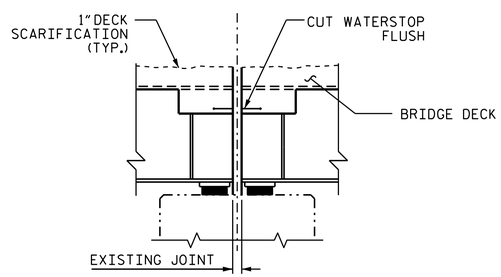

MINIMUM EXISTING JOINT DEMOLITION

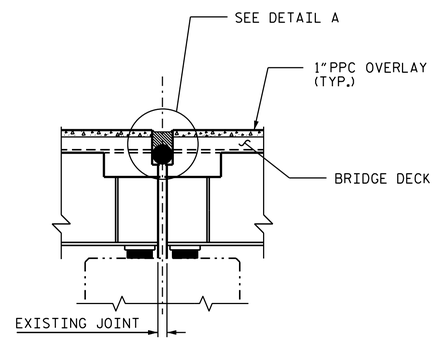

PROPOSED JOINT

JOINT INSTALLATION SEQUENCE AT BENTS

(FIXED JOINTS SECTION A-A)

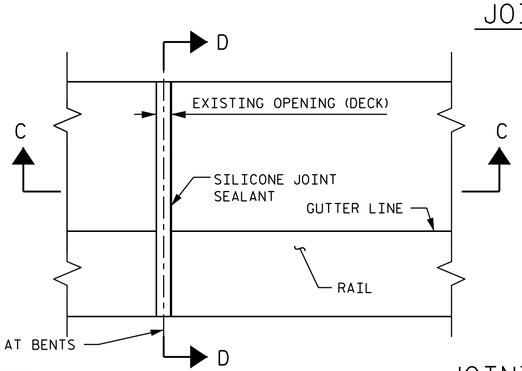

PLAN

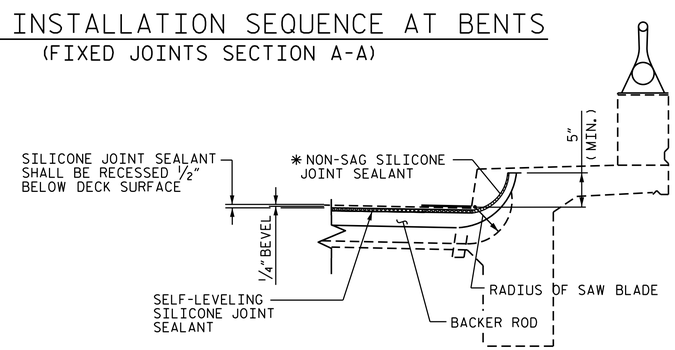

SECTON D-D

JOINT DETAILS AT SIDEWALKS

PROJECT NO. 15BPR.4

NASH COUNTY

BRIDGE NO. 94

STATE OF NORTH CAROLINA
DEPARTMENT OF TRANSPORTATION
RALEIGH

SUPERSTRUCTURE

JOINT DETAILS

NORTH CAROLINA PROFESSIONAL SEAL 030024 ENGINEER ASTER G. ABRAHA

DocuSigned by: Aster Abraha
2/12/2018

DOCUMENT NOT CONSIDERED FINAL UNLESS ALL SIGNATURES COMPLETED

REVISIONS						SHEET NO.
NO.	BY:	DATE:	NO.	BY:	DATE:	S-12
1			3			TOTAL SHEETS
2			4			61

DRAWN BY :	S. T. SANDOR	DATE :	08/2017
CHECKED BY :	A. G. ABRAHA	DATE :	10/2017

12-FEB-2018 14:47
R:\Structures\Plans\404_027_15BPR.4_SMU_JT_630094_S12.dgn
aabraha