NOTES

SEE TRAFFIC MANAGEMENT PLANS FOR LANE WIDTHS, SEQUENCING AND OTHER TRAFFIC CONTROL MEASURES FOR STAGING OF POLYESTER POLYMER CONCRETE (PPC) SYSTEM AND SURFACE PREPARATION.

EXISTING BRIDGE IS COVERED WITH ASPHALT OVERLAY, INCIDENTAL MILLING OF THE APPROACH ROADWAY IS REQUIRED.

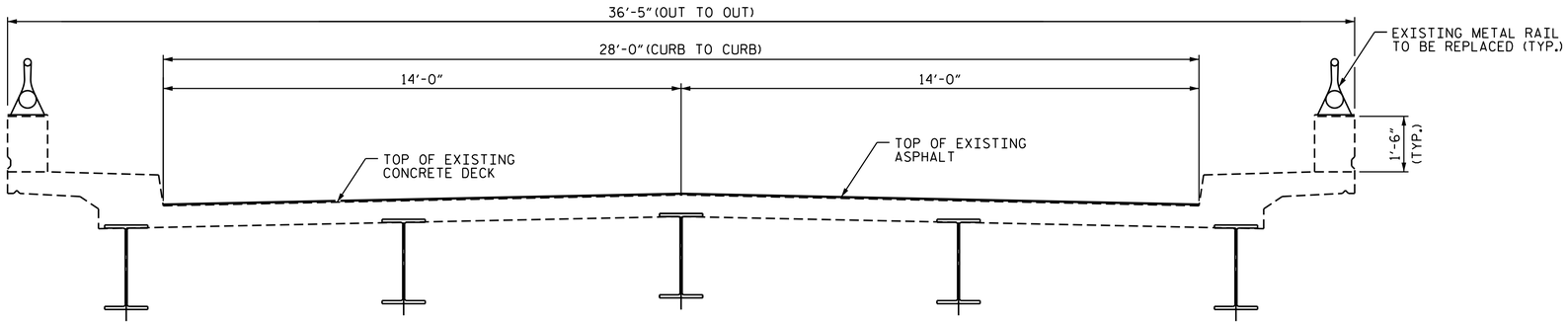

TYPICAL SECTION

(EXISTING)

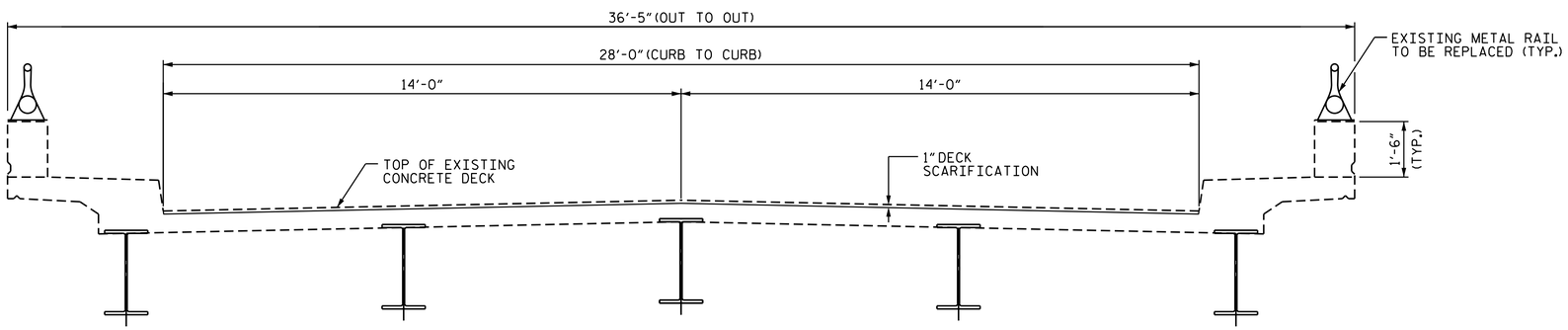

TYPICAL SECTION

(AFTER EXISTING ASPHALT IS REMOVED DOWN TO ORIGINAL CONCRETE DECK SURFACE)

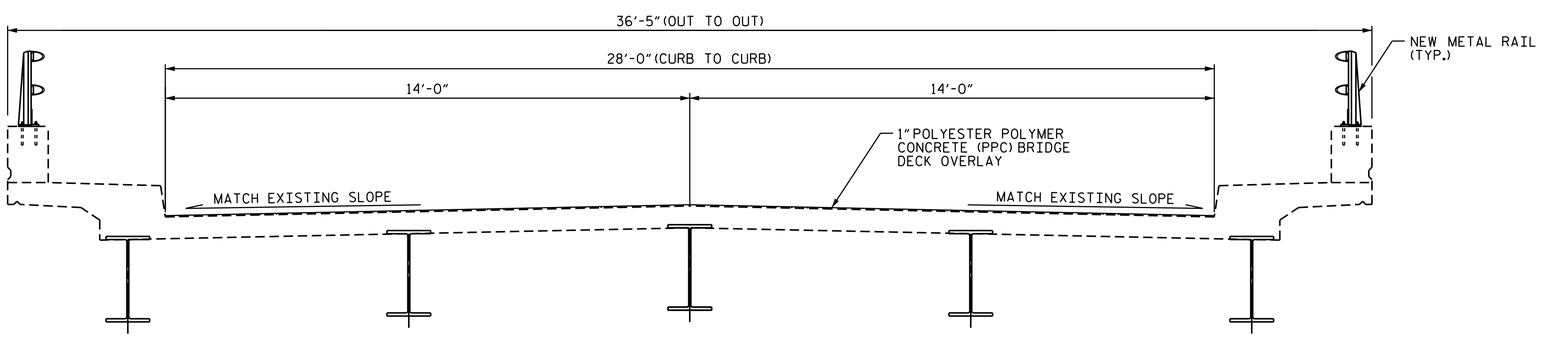

TYPICAL SECTION

(PROPOSED)

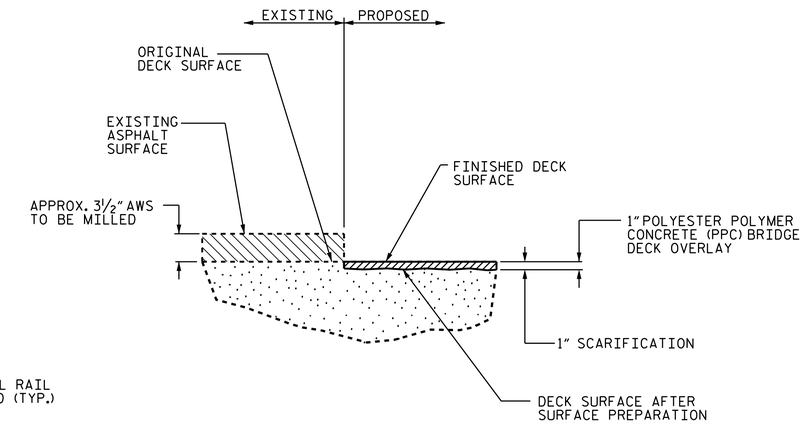

DETAIL FOR POLYESTER POLYMER CONCRETE OVERLAY

PROJECT NO. 15BPR.4

NASH COUNTY

BRIDGE NO. 94

SHEET 2 OF 2

NORTH CAROLINA PROFESSIONAL SEAL 030024 ENGINEER ASTER G. ABRAHA

DocuSigned by: Aster Abraha
2/12/2018

STATE OF NORTH CAROLINA
DEPARTMENT OF TRANSPORTATION
RALEIGH

SUPERSTRUCTURE

TYPICAL SECTION
SPANS 2, 11, 17 & 26

REVISIONS						SHEET NO.
NO.	BY:	DATE:	NO.	BY:	DATE:	S-7
1			3			TOTAL SHEETS
2			4			61

DOCUMENT NOT CONSIDERED FINAL UNLESS ALL SIGNATURES COMPLETED

DRAWN BY :	S. T. SANDOR	DATE :	07/2017
CHECKED BY :	A. G. ABRAHA	DATE :	10/2017

12-FEB-2018 14:47
R:\Structures\Plans\404_011_15BPR.4_SMU_ TS_630094_S6_7.dgn
aabraha