NOTES:

REPAIR LOCATIONS AND ESTIMATE OF QUANTITIES ARE GIVEN WITH THE BEST INFORMATION AVAILABLE. IF ADDITIONAL REPAIRS NOT SHOWN ON THE DRAWINGS ARE DEEMED NECESSARY BY THE ENGINEER, THE ENGINEER SHALL NOTE ON THE DRAWINGS THE APPROXIMATE LOCATION AND DESCRIPTION OF THE REPAIRS AND ADJUST THE ACTUAL QUANTITIES ENTERED INTO THE REPAIR QUANTITY TABLE.

FOR DECK JOINT REPAIR DETAILS, SEE SHEET S-12.

FOR UNDERSIDE OF DECK REPAIRS, SEE "SUPERSTRUCTURE REPAIRS" SHEETS.

CONCRETE REPAIR MAY BE SUBSTITUTED IN LIEU OF SHOTCRETE REPAIR WITH THE APPROVAL OF THE ENGINEER.

SHOTCRETE REPAIR MAY BE SUBSTITUTED IN LIEU OF CONCRETE REPAIR WITH THE APPROVAL OF THE ENGINEER.

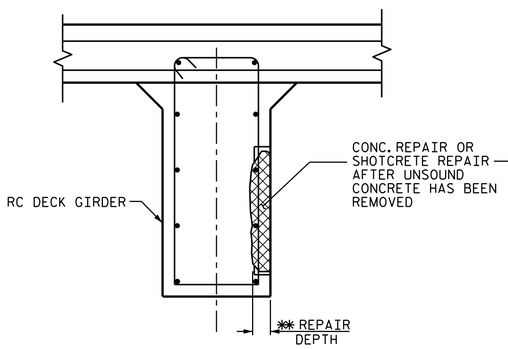

SECTION C-C

EXISTING REINFORCING STEEL LOCATIONS ARE FROM BEST INFORMATION AVAILABLE.

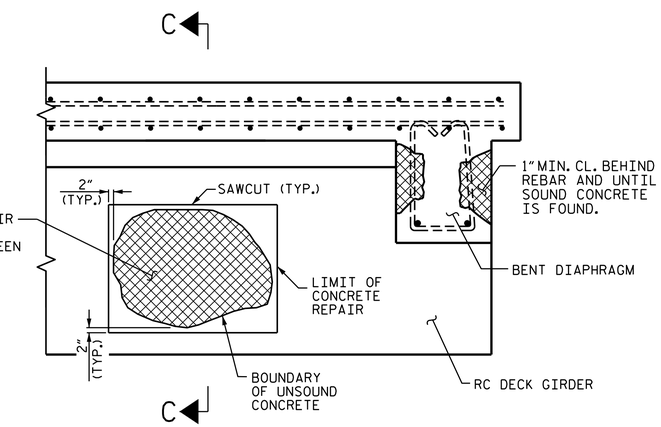

ELEVATION

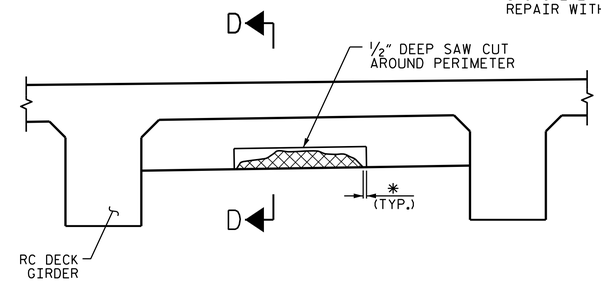

TYPICAL SECTION

EXISTING REBAR TO REMAIN IN PLACE. CLEAN AND REPAIR AS NECESSARY.

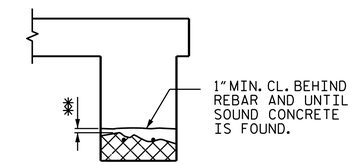

SECTION D-D

DAMAGED AREA

* REMOVE CONCRETE UNTIL SOUND CONCRETE IS FOUND (2" MIN.)

** IF REMOVAL OF UNSOUND CONCRETE RESULTS IN EXPOSING MORE THAN HALF THE DEPTH OF A REINFORCING BAR, REMOVE ADDITIONAL CONCRETE TO 1" BEHIND THE BAR WITHOUT DAMAGE TO REINFORCING BAR.

RC DECK GIRDER REPAIR DETAILS

BENT DIAPHRAGM REPAIR DETAILS

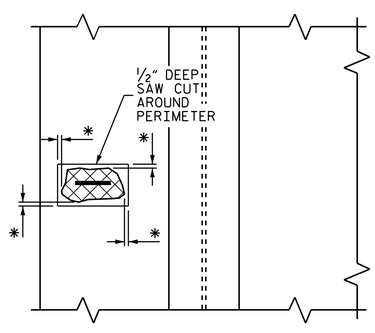

OVERHANG DETAILS

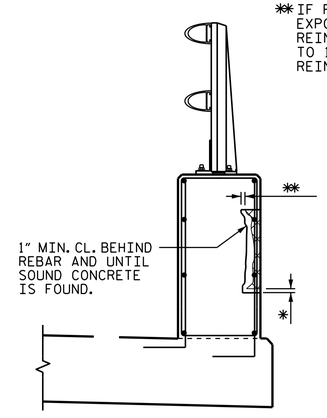

SECTION S-S

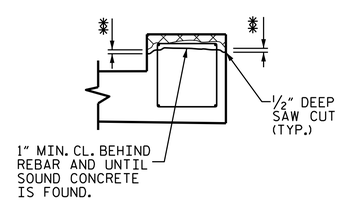

SECTION T-T

DAMAGED AREA

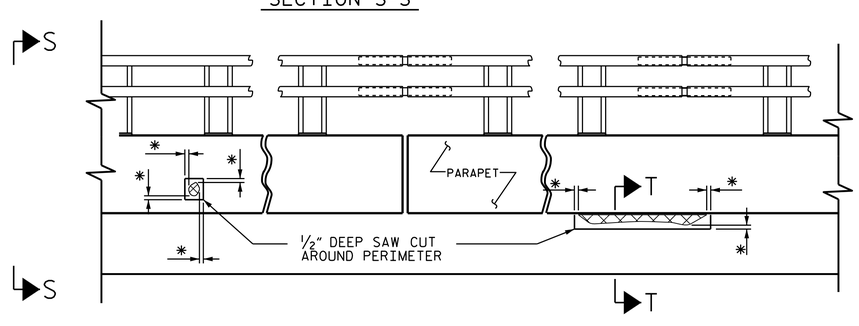

BRIDGE RAIL AND CURB REPAIR DETAILS

PROJECT NO. 15BPR.4

NASH COUNTY

BRIDGE NO. 94

STATE OF NORTH CAROLINA
DEPARTMENT OF TRANSPORTATION
RALEIGH

SUPERSTRUCTURE OVERHANG, DIAPHRAGM AND BRIDGE RAIL REPAIR DETAILS

NORTH CAROLINA PROFESSIONAL SEAL 030024 ENGINEER ASTER G. ABRAHA

DocuSigned by: Aster Abraha
2/12/2018

DOCUMENT NOT CONSIDERED FINAL UNLESS ALL SIGNATURES COMPLETED

REVISIONS							
NO.	BY:	DATE:	NO.	BY:	DATE:	SHEET NO.	S-32
1			3			TOTAL SHEETS	61
2			4				

DRAWN BY : S. T. SANDOR DATE : 08/2017
CHECKED BY : A. G. ABRAHA DATE : 10/2017

12-FEB-2018 14:48
R:\Structures\Plans\404_047_15BPR.4_SMU_GDR_repair_630094_S29.dgn
aabraha