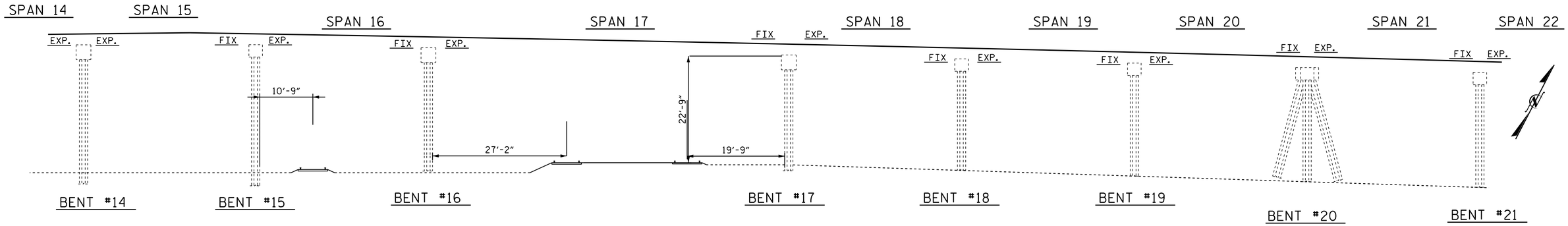

ELEVATION

(SECTION ALONG ℄ ROADWAY)

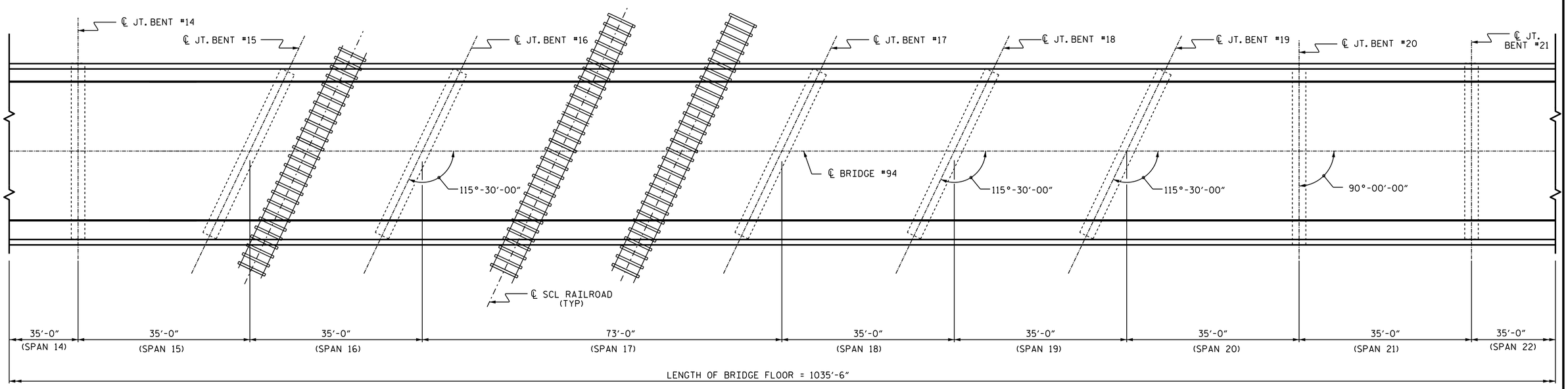

PLAN

(COLUMNS & FOOTINGS NOT SHOWN IN PLAN VIEW FOR CLARITY)

PROJECT NO. 15BPR.4

NASH COUNTY

BRIDGE NO. 94

SHEET 3 OF 4

STATE OF NORTH CAROLINA
DEPARTMENT OF TRANSPORTATION
RALEIGH

GENERAL DRAWING

FOR BRIDGE ON NC 97
OVER US 301 BUS., NBL
AND SCL RAILROAD

NORTH CAROLINA PROFESSIONAL SEAL 030024 ENGINEER ASTER G. ABRAHA

DocuSigned by: Aster Abraha
2/12/2018

DOCUMENT NOT CONSIDERED FINAL UNLESS ALL SIGNATURES COMPLETED

REVISIONS								SHEET NO.
NO.	BY:	DATE:	NO.	BY:	DATE:			S-4
1			3					TOTAL SHEETS
2			4					61

DRAWN BY : S. T. SANDOR DATE : 07/2017
CHECKED BY : A. G. ABRAHA DATE : 09/2017

12-FEB-2018 14:47
R:\Structures\Plans\404_005_15BPR.4_SMU_ GD_630094_S2-5.dgn
aabraha