This electronic collection of documents is provided for the convenience of the user and is Not a Certified Document –

The documents contained herein were originally issued and sealed by the individuals whose names and license numbers appear on each page, on the dates appearing with their signature on that page.
This file or an individual page shall not be considered a certified document.

09/08/99

PROJECT: B-6002

CONTRACT: DD00328

See Sheet 1A For Index of Sheets
See Sheet 1B For Conventional Symbols
See Sheet RW01 TO RW04 For Survey Control Sheets

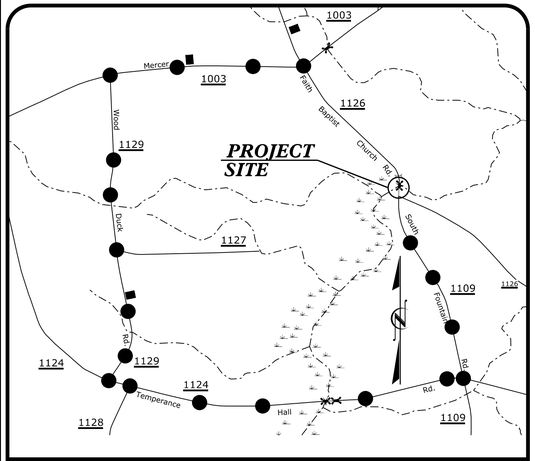

VICINITY MAP

OFF-SITE DETOUR

NAD 83/
NA 2011

STATE OF NORTH CAROLINA
DIVISION OF HIGHWAYS

EDGECOMBE COUNTY

LOCATION: BRIDGE NO. 64 OVER TOWN CREEK ON SR 1126 (FAITH BAPTIST CHURCH RD.)

TYPE OF WORK: GRADING, DRAINAGE, PAVING, CULVERT, & STRUCTURE

STATE	STATE PROJECT REFERENCE NO.	SHEET NO.	TOTAL SHEETS
N.C.	B-6002	1	

STATE PROJ. NO.	F.A. PROJ. NO.	DESCRIPTION
48197.1.2		PE
48197.2.1	BRZ-1126(008)	R/W & UTIL
48197.3.1		CONST.

WETHERILL ENGINEERING
1223 Jones Franklin Rd.
Raleigh, N.C. 27606
License No. F-0377
Bus: 919 851 8077
Fax: 919 851 8107
TRANSPORTATION PLANNING/DESIGN - BRIDGE/STRUCTURE DESIGN
CIVIL/SITE DESIGN - GIS/GPS - CONSTRUCTION OBSERVATION

BRIDGE #320064

4

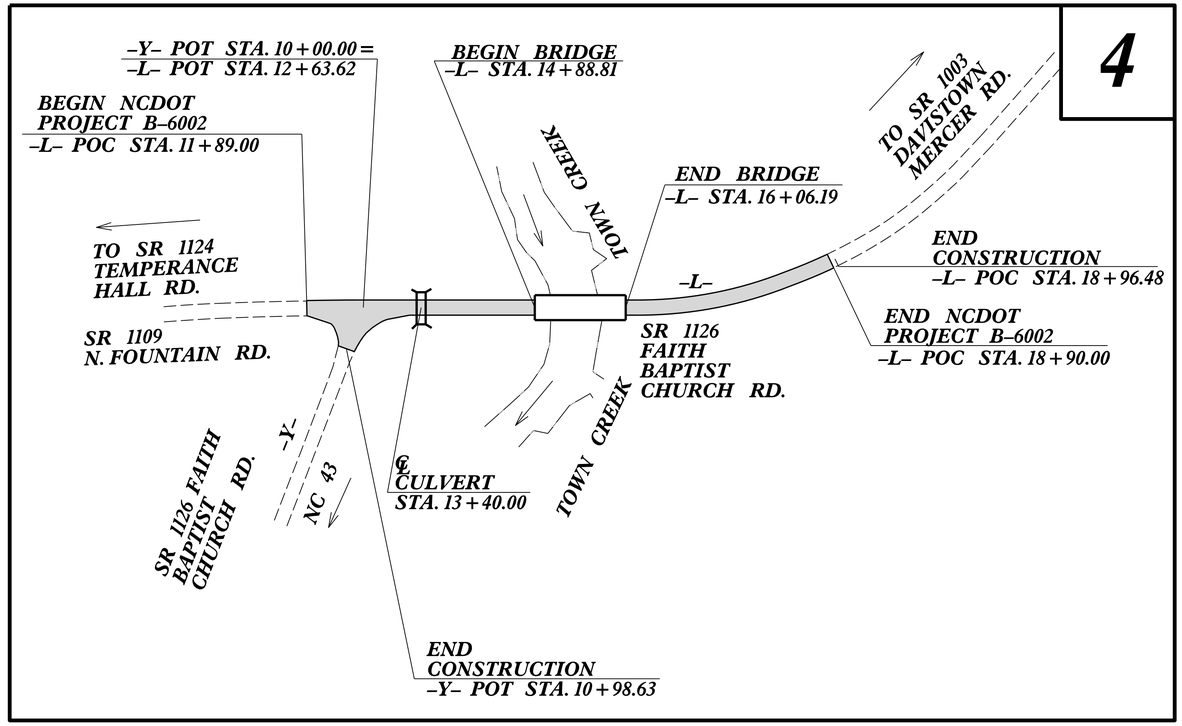

DOCUMENT NOT CONSIDERED FINAL UNLESS ALL SIGNATURES COMPLETED

GRAPHIC SCALES

30 15 0 30 60
PLANS

30 15 0 30 60
PROFILE (HORIZONTAL)

6 3 0 6 12
PROFILE (VERTICAL)

DESIGN DATA

ADT 2018 = 470

T = 6 % *
V = 35 MPH

* (TTST = 3% + DUAL = 3%)

FUNC CLASS = LOCAL
SUBREGIONAL TIER

PROJECT LENGTH

LENGTH ROADWAY PROJECT B-6002 =	0.111 MILES
LENGTH STRUCTURE PROJECT B-6002 =	0.022 MILES
TOTAL LENGTH PROJECT B-6002 =	0.133 MILES

NCDOT CONTACT: RACHEL C. EVANS, PE
DIVISION 4 PROJECT ENGINEER

Prepared for:
DIVISION OF HIGHWAYS
DIVISION FOUR
509 Ward Boulevard, Wilson NC, 27895

2018 STANDARD SPECIFICATIONS

RIGHT OF WAY DATE: APRIL 4, 2019

LETTING DATE: MAY 25, 2021

EDWARD G. WETHERILL, PE
PROJECT ENGINEER

GREG S. PURVIS, PE
PROJECT DESIGN ENGINEER

NORTH CAROLINA PROFESSIONAL SEAL 044561 ENGINEER HARMINDER SINGH
HYDRAULICS ENGINEER
10/20/2020 | 12:24:30 EDT
SIGNATURE: Harminder Singh P.E.

NORTH CAROLINA PROFESSIONAL SEAL 022999 ENGINEER GREG S. PURVIS
ROADWAY DESIGN ENGINEER
10/19/2020 | 08:
SIGNATURE: Greg S. Purvis P.E.

STATE OF NORTH CAROLINA DEPARTMENT OF TRANSPORTATION

10/16/2020
...\Proj\320064_Rdy_tsh.dgn
USER:GPurvis

5/14/99

GENERAL NOTES

GENERAL NOTES: 2018 SPECIFICATIONS

EFFECTIVE: 01–16–2018
REVISED:

GRADING AND SURFACING OR RESURFACING AND WIDENING:

THE GRADE LINES SHOWN DENOTE THE FINISHED ELEVATION OF THE PROPOSED SURFACING AT GRADE POINTS SHOWN ON THE TYPICAL SECTIONS. WHERE NO GRADE LINES ARE SHOWN, THE PROFILES SHOWN DENOTE THE TOP ELEVATION OF THE EXISTING PAVEMENT ALONG THE CENTER LINE OF SURVEY ON WHICH THE PROPOSED RESURFACING WILL BE PLACED. GRADE LINES MAY BE ADJUSTED BY THE ENGINEER IN ORDER TO SECURE A PROPER TIE–IN.

CLEARING:

CLEARING ON THIS PROJECT SHALL BE PERFORMED TO THE LIMITS ESTABLISHED BY METHOD III.

SUPERELEVATION:

ALL CURVES ON THIS PROJECT SHALL BE SUPERELEVATED IN ACCORDANCE WITH STD. NO. 225.04 USING THE RATE OF SUPERELEVATION AND RUNOFF SHOWN ON THE PLANS. SUPERELEVATION IS TO BE REVOLVED ABOUT THE GRADE POINTS SHOWN ON THE TYPICAL SECTIONS.

SHOULDER CONSTRUCTION:

ASPHALT, EARTH, AND CONCRETE SHOULDER CONSTRUCTION ON THE HIGH SIDE OF SUPERELEVATED CURVES SHALL BE IN ACCORDANCE WITH STD. NO. 560.01

GUARDRAIL:

THE GUARDRAIL LOCATIONS SHOWN ON THE PLANS MAY BE ADJUSTED DURING CONSTRUCTION AS DIRECTED BY THE ENGINEER. THE CONTRACTOR SHOULD CONSULT WITH THE ENGINEER PRIOR TO ORDERING GUARDRAIL MATERIAL.

SUBSURFACE PLANS:

NO SUBSURFACE PLANS ARE AVAILABLE ON THIS PROJECT. THE CONTRACTOR SHOULD MAKE HIS OWN INVESTIGATION AS TO THE SUBSURFACE CONDITIONS.

END BENTS:

THE ENGINEER SHALL CHECK THE STRUCTURE END BENT PLANS, DETAILS, AND CROSS–SECTION PRIOR TO SETTING OF THE SLOPE STAKES FOR THE EMBANKMENT OR EXCAVATION APPROACHING A BRIDGE.

TEMPORARY SHORING:

SHORING REQUIRED FOR THE MAINTENANCE OF TRAFFIC WILL BE PAID FOR AS "EXTRA WORK" IN ACCORDANCE WITH SECTION 104–7.

UTILITIES:

UTILITY OWNERS ON THIS PROJECT ARE

POWER – EDGECOMBE–MARTIN EMC

COMMUNICATION – CENTURYLINK

WATER – EDGECOMBE COUNTY

ANY RELOCATION OF EXISTING UTILITIES WILL BE ACCOMPLISHED BY OTHERS, EXCEPT AS SHOWN ON THE PLANS.

RIGHT–OF–WAY MARKERS:

ALL RIGHT–OF–WAY MARKERS ON THIS PROJECT SHALL BE PLACED BY OTHERS.

2018 ROADWAY ENGLISH STANDARD DRAWINGS

EFF. 01–16–2018
REV.

2018 ROADWAY ENGLISH STANDARD DRAWINGS

The following Roadway Standards as appear in "Roadway Standard Drawings" Highway Design Branch – N. C. Department of Transportation – Raleigh, N. C., Dated January, 2018 are applicable to this project and by reference hereby are considered a part of these plans:

STD.NO.	TITLE
DIVISION 2 – EARTHWORK	
200.03	Method of Clearing – Method III
225.02	Guide for Grading Subgrade – Secondary and Local
225.04	Method of Obtaining Superelevation – Two Lane Pavement
DIVISION 3 – PIPE CULVERTS	
300.01	Method of Pipe Installation
DIVISION 4 – MAJOR STRUCTURES	
422.02	Bridge Approach Fills – Type II Modiefied Approach Fill
DIVISION 5 – SUBGRADE, BASES AND SHOULDERS	
560.01	Method of Shoulder Construction – High Side of Superelevated Curve – Method I
DIVISION 8 – INCIDENTALS	
840.25	Anchorage for Frames – Brick or Concrete or Precast
840.29	Frames and Narrow Slot Flat Grates
840.35	Traffic Bearing Grated Drop Inlet – for Cast Iron Double Frame and Grates
840.46	Traffic Bearing Precast Drainage Structure
840.66	Drainage Structure Steps
846.01	Concrete Curb, Gutter and Curb & Gutter
846.04	Drop Inlet Installation in Shoulder Berm Gutter
862.01	Guardrail Placement
862.02	Guardrail Installation
862.03	Structure Anchor Units
876.02	Guide for Rip Rap at Pipe Outlets

INDEX OF SHEETS

PROJECT REFERENCE NO.	SHEET NO.
B-6002	1-A
R/W SHEET NO.	

ROADWAY DESIGN ENGINEER
1/21/2020

NORTH CAROLINA PROFESSIONAL SEAL 022999 ENGINEER GREG S. PURVIS

DocuSigned by:
Greg S. Purvis
1/21/2020 | 10:08 AM EST

DOCUMENT NOT CONSIDERED FINAL UNLESS ALL SIGNATURES COMPLETED

1/21/2020
R:\Roadway\Proj\20064_Rdy_PSH_1A.dgn
USER: gpurvis

12/2/2016

PROJECT REFERENCE NO.	SHEET NO.
B-6002	1-B

STATE OF NORTH CAROLINA, DIVISION OF HIGHWAYS

CONVENTIONAL PLAN SHEET SYMBOLS

Note: Not to Scale

**S.U.E. = Subsurface Utility Engineering*

BOUNDARIES AND PROPERTY:

- State Line
- County Line
- Township Line
- City Line
- Reservation Line
- Property Line
- Existing Iron Pin — EIP
- Computed Property Corner
- Property Monument — ECM
- Parcel/Sequence Number — 123
- Existing Fence Line
- Proposed Woven Wire Fence
- Proposed Chain Link Fence
- Proposed Barbed Wire Fence
- Existing Wetland Boundary — WLB
- Proposed Wetland Boundary — WLB
- Existing Endangered Animal Boundary — EAB
- Existing Endangered Plant Boundary — EPB
- Existing Historic Property Boundary — HPB
- Known Contamination Area: Soil — S
- Potential Contamination Area: Soil — S
- Known Contamination Area: Water — W
- Potential Contamination Area: Water — W
- Contaminated Site: Known or Potential

BUILDINGS AND OTHER CULTURE:

- Gas Pump Vent or U/G Tank Cap
- Sign — S
- Well — W
- Small Mine
- Foundation
- Area Outline
- Cemetery
- Building
- School
- Church
- Dam

HYDROLOGY:

- Stream or Body of Water
- Hydro, Pool or Reservoir
- Jurisdictional Stream — JS
- Buffer Zone 1 — BZ 1
- Buffer Zone 2 — BZ 2
- Flow Arrow
- Disappearing Stream
- Spring
- Wetland
- Proposed Lateral, Tail, Head Ditch — FLOW
- False Sump

RAILROADS:

- Standard Gauge — CSX TRANSPORTATION
- RR Signal Milepost — MILEPOST 35
- Switch — SWITCH
- RR Abandoned
- RR Dismantled

RIGHT OF WAY & PROJECT CONTROL:

- Secondary Horiz and Vert Control Point
- Primary Horiz Control Point
- Primary Horiz and Vert Control Point
- Exist Permanent Easment Pin and Cap
- New Permanent Easement Pin and Cap
- Vertical Benchmark
- Existing Right of Way Marker
- Existing Right of Way Line
- New Right of Way Line — RW
- New Right of Way Line with Pin and Cap — RW
- New Right of Way Line with Concrete or Granite R/W Marker — RW
- New Control of Access Line with Concrete C/A Marker — CA
- Existing Control of Access — CA
- New Control of Access — CA
- Existing Easement Line — E
- New Temporary Construction Easement — E
- New Temporary Drainage Easement — TDE
- New Permanent Drainage Easement — PDE
- New Permanent Drainage / Utility Easement — DUE
- New Permanent Utility Easement — PUE
- New Temporary Utility Easement — TUE
- New Aerial Utility Easement — AUE

ROADS AND RELATED FEATURES:

- Existing Edge of Pavement
- Existing Curb
- Proposed Slope Stakes Cut — C
- Proposed Slope Stakes Fill — F
- Proposed Curb Ramp — CR
- Existing Metal Guardrail
- Proposed Guardrail
- Existing Cable Guiderail
- Proposed Cable Guiderail
- Equality Symbol
- Pavement Removal

VEGETATION:

- Single Tree
- Single Shrub
- Hedge
- Woods Line
- Orchard
- Vineyard — Vineyard

EXISTING STRUCTURES:

MAJOR:

- Bridge, Tunnel or Box Culvert — CONC
- Bridge Wing Wall, Head Wall and End Wall — CONC WW

MINOR:

- Head and End Wall — CONC HW
- Pipe Culvert
- Footbridge
- Drainage Box: Catch Basin, DI or JB — CB
- Paved Ditch Gutter
- Storm Sewer Manhole — S
- Storm Sewer — S

UTILITIES:

POWER:

- Existing Power Pole
- Proposed Power Pole
- Existing Joint Use Pole
- Proposed Joint Use Pole
- Power Manhole — P
- Power Line Tower
- Power Transformer
- U/G Power Cable Hand Hole
- H-Frame Pole
- U/G Power Line LOS B (S.U.E.*) — P
- U/G Power Line LOS C (S.U.E.*) — P
- U/G Power Line LOS D (S.U.E.*) — P

TELEPHONE:

- Existing Telephone Pole
- Proposed Telephone Pole
- Telephone Manhole — T
- Telephone Pedestal — T
- Telephone Cell Tower
- U/G Telephone Cable Hand Hole
- U/G Telephone Cable LOS B (S.U.E.*) — T
- U/G Telephone Cable LOS C (S.U.E.*) — T
- U/G Telephone Cable LOS D (S.U.E.*) — T
- U/G Telephone Conduit LOS B (S.U.E.*) — TC
- U/G Telephone Conduit LOS C (S.U.E.*) — TC
- U/G Telephone Conduit LOS D (S.U.E.*) — TC
- U/G Fiber Optics Cable LOS B (S.U.E.*) — T FO
- U/G Fiber Optics Cable LOS C (S.U.E.*) — T FO
- U/G Fiber Optics Cable LOS D (S.U.E.*) — T FO

WATER:

- Water Manhole — W
- Water Meter
- Water Valve
- Water Hydrant
- U/G Water Line LOS B (S.U.E*)
- U/G Water Line LOS C (S.U.E*)
- U/G Water Line LOS D (S.U.E*)
- Above Ground Water Line — A/G Water

TV:

- TV Pedestal — C
- TV Tower
- U/G TV Cable Hand Hole — HH
- U/G TV Cable LOS B (S.U.E.*) — TV
- U/G TV Cable LOS C (S.U.E.*) — TV
- U/G TV Cable LOS D (S.U.E.*) — TV
- U/G Fiber Optic Cable LOS B (S.U.E.*) — TV FO
- U/G Fiber Optic Cable LOS C (S.U.E.*) — TV FO
- U/G Fiber Optic Cable LOS D (S.U.E.*) — TV FO

GAS:

- Gas Valve
- Gas Meter
- U/G Gas Line LOS B (S.U.E.*) — G
- U/G Gas Line LOS C (S.U.E.*) — G
- U/G Gas Line LOS D (S.U.E.*) — G
- Above Ground Gas Line — A/G Gas

SANITARY SEWER:

- Sanitary Sewer Manhole
- Sanitary Sewer Cleanout
- U/G Sanitary Sewer Line — SS
- Above Ground Sanitary Sewer — A/G Sanitary Sewer
- SS Forced Main Line LOS B (S.U.E.*) — FSS
- SS Forced Main Line LOS C (S.U.E.*) — FSS
- SS Forced Main Line LOS D (S.U.E.*) — FSS

MISCELLANEOUS:

- Utility Pole
- Utility Pole with Base
- Utility Located Object
- Utility Traffic Signal Box — S
- Utility Unknown U/G Line LOS B (S.U.E.*) — ?UTL
- U/G Tank; Water, Gas, Oil
- Underground Storage Tank, Approx. Loc. — UST
- A/G Tank; Water, Gas, Oil
- Geoenvironmental Boring
- U/G Test Hole LOS A (S.U.E.*)
- Abandoned According to Utility Records — AATUR
- End of Information — E.O.I.

6/2/99

PROJECT REFERENCE NO.	SHEET NO.
B-6002	2A-1

ROADWAY DESIGN ENGINEER 1/7/2020 — NORTH CAROLINA PROFESSIONAL SEAL 022999 ENGINEER GREG S. PURVIS — DocuSigned by: Greg S. Purvis

PAVEMENT DESIGN ENGINEER 1/7/2020 — NORTH CAROLINA PROFESSIONAL SEAL 037392 ENGINEER RACHEL L. EVANS — DocuSigned by: Rachel L. Evans

WETHERILL ENGINEERING
1223 Jones Franklin Rd.
Raleigh, N.C. 27606
License No. F-0377
Bus: 919 851 8077
Fax: 919 851 8107
TRANSPORTATION PLANNING/DESIGN - BRIDGE/STRUCTURE DESIGN
CIVIL/SITE DESIGN - GIS/GPS - CONSTRUCTION OBSERVATION

BRIDGE #320064

PAVEMENT SCHEDULE

C1	PROP. APPROX. 3" ASPHALT CONCRETE SURFACE COURSE, TYPE S9.5B, AT AN AVERAGE RATE OF 165 LBS. PER SQ. YD. IN EACH OF TWO LAYERS.
C2	PROP. VAR. DEPTH ASPHALT CONCRETE SURFACE COURSE, TYPE S9.5B, AT AN AVERAGE RATE OF 110 LBS. PER SQ. YD. PER 1" DEPTH. TO BE PLACED IN LAYERS NOT TO EXCEED 1½" IN DEPTH.
E1	PROP. APPROX. 4" ASPHALT CONCRETE BASE COURSE, TYPE B25.0C, AT AN AVERAGE RATE OF 456 LBS. PER SQ. YD.
E2	PROP. VAR. DEPTH ASPHALT CONCRETE BASE COURSE, TYPE B25.0C, AT AN AVERAGE RATE OF 114 LBS. PER SQ. YD. PER 1" DEPTH. TO BE PLACED IN LAYERS NOT LESS THAN 3" IN DEPTH OR GREATER THAN 5½" IN DEPTH.
R1	SHOULDER BERM GUTTER
T	EARTH MATERIAL.
U	EXISTING PAVEMENT.
V	MILLING BITUMINOUS PAVEMENT. (SEE MILLING DETAIL)
W	VARIABLE DEPTH ASPHALT PAVEMENT (SEE WEDGING DETAIL)

NOTE: PAVEMENT EDGE SLOPES ARE 1:1 UNLESS SHOWN OTHERWISE.

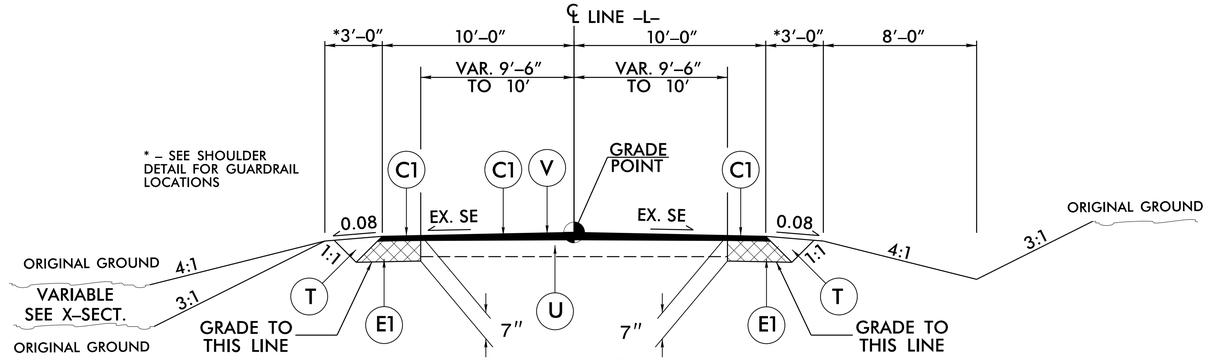

TYPICAL SECTION NO. 1

USE TYPICAL SECTION NO. 1 AS FOLLOWS:
-L- STA. 11+89.00 TO -L- STA. 13+17.00
-Y- STA. 10+00.00 TO -Y- STA. 10+98.63

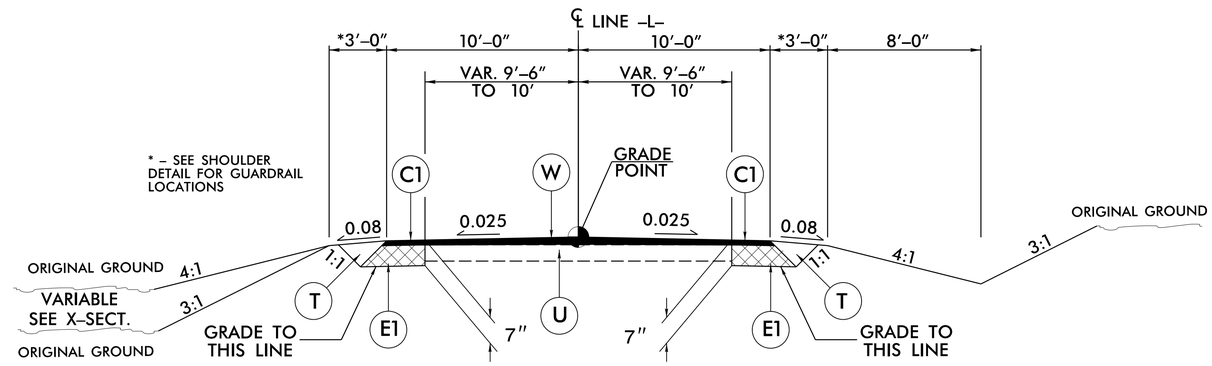

TYPICAL SECTION NO. 2

USE TYPICAL SECTION NO. 2 AS FOLLOWS:
-L- STA. 13+60.00 TO -L- STA. 14+38.00
-L- STA. 17+57.00 TO -L- STA. 18+90.00

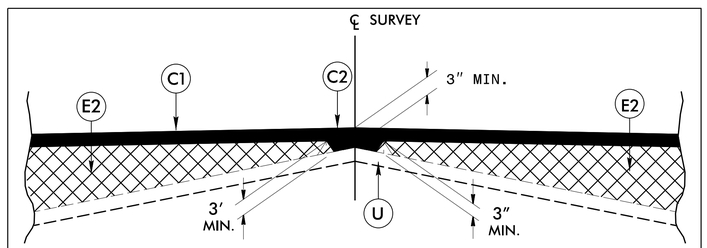

W: Detail Showing Method of Wedging

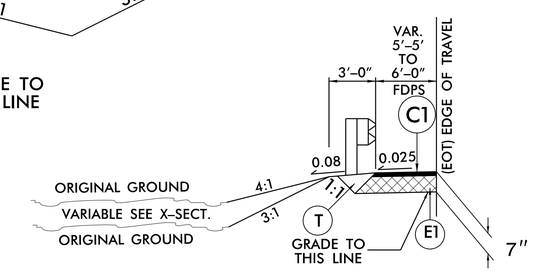

SHOULDER DETAIL

USE SHOULDER DETAIL IN CONJUNCTION WITH TYPICAL SECTIONS NO. 1 & 2:
-L- STA. 12+45.06 TO -L- STA. 14+88.81 LT.
-L- STA. 12+57.70 TO -L- STA. 14+88.81 RT.
-L- STA. 16+06.19 TO -L- STA. 16+74.94 LT.
-L- STA. 16+06.19 TO -L- STA. 16+62.44 RT.

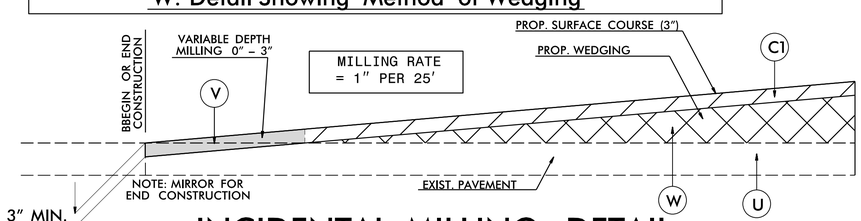

INCIDENTAL MILLING DETAIL

-L- STA. 11+89.00 TO -L- STA. 13+17.00
-L- STA. 13+60.00 TO -L- STA. 14+03.00
-L- STA. 17+57.00 TO -L- STA. 18+90.00
-Y- STA. 10+00.00 TO -Y- STA. 10+98.63

STATION RANGES ARE APPROXIMATE ONLY. GRADE MAY BE ADJUSTED BY ENGINEER TO ENSURE A PROPER TIE-IN

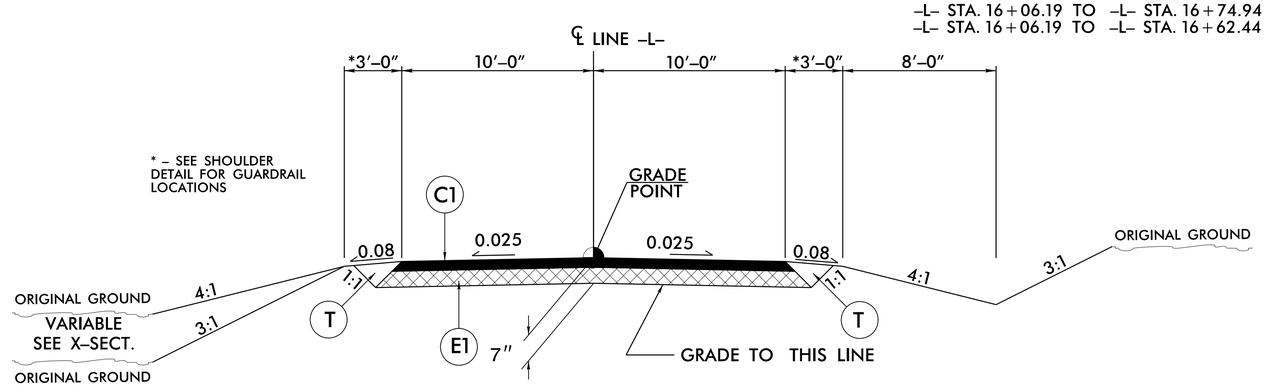

TYPICAL SECTION NO. 3

USE TYPICAL SECTION NO. 3 AS FOLLOWS:
-L- STA. 13+17.00 TO -L- STA. 13+60
-L- STA. 14+38.00 TO -L- STA. 14+88.81 (BEGIN BRIDGE)
-L- STA. 16+06.19 (END BRIDGE) TO -L- STA. 17+57.00

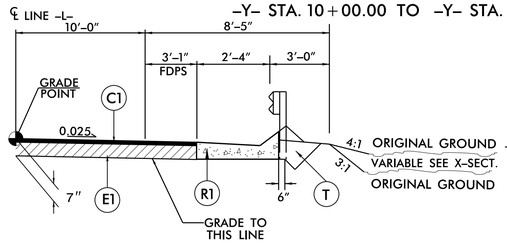

SHOULDER BERM GUTTER DETAIL

USE SHOULDER BERM GUTTER DETAIL IN CONJUNCTION WITH TYPICAL SECTIONS NO. 1 & 2:
STA. 14+44.00 TO STA. 14+77.94 LT. & RT.
STA. 16+17.06 TO STA. 16+37.00 RT.
STA. 16+17.06 TO STA. 16+50.00 LT.

12/16/2019
...320064_Rdy_typ.dgn
USER: ...

PROJECT REFERENCE NO.	SHEET NO.
B-6002	2A-2

HYDRAULIC DESIGN ENGINEER 1/8/2020 — NORTH CAROLINA PROFESSIONAL SEAL 044561 ENGINEER HARWINDER SINGH — DocuSigned by: Harwinder Singh

ROADWAY DESIGN ENGINEER 1/7/2020 — NORTH CAROLINA PROFESSIONAL SEAL 022999 ENGINEER GREG S. PURVIS — DocuSigned by: Greg S. Purvis

PAVEMENT DESIGN ENGINEER 1/7/2020 — NORTH CAROLINA PROFESSIONAL SEAL 037392 ENGINEER RACHEL C. EVANS — DocuSigned by: Rachel C. Evans

WETHERILL ENGINEERING
1223 Jones Franklin Rd.
Raleigh, N.C. 27606
License No. F-0377
Bus: 919 851 8077
Fax: 919 851 8107
TRANSPORTATION PLANNING/DESIGN - BRIDGE/STRUCTURE DESIGN
CIVIL/SITE DESIGN - GIS/GPS - CONSTRUCTION OBSERVATION

BRIDGE #320064

PAVEMENT SCHEDULE	
C1	PROP. APPROX. 3″ ASPHALT CONCRETE SURFACE COURSE, TYPE S9.5B, AT AN AVERAGE RATE OF 165 LBS. PER SQ. YD. IN EACH OF TWO LAYERS.
C2	PROP. VAR. DEPTH ASPHALT CONCRETE SURFACE COURSE, TYPE S9.5B, AT AN AVERAGE RATE OF 110 LBS. PER SQ. YD. PER 1″ DEPTH. TO BE PLACED IN LAYERS NOT TO EXCEED 1½″ IN DEPTH.
E1	PROP. APPROX. 4″ ASPHALT CONCRETE BASE COURSE, TYPE B25.0C, AT AN AVERAGE RATE OF 456 LBS. PER SQ. YD.
E2	PROP. VAR. DEPTH ASPHALT CONCRETE BASE COURSE, TYPE B25.0C, AT AN AVERAGE RATE OF 114 LBS. PER SQ. YD. PER 1″ DEPTH. TO BE PLACED IN LAYERS NOT LESS THAN 3″ IN DEPTH OR GREATER THAN 5½″ IN DEPTH.
R1	SHOULDER BERM GUTTER
T	EARTH MATERIAL.
U	EXISTING PAVEMENT.
V	MILLING BITUMINOUS PAVEMENT. (SEE MILLING DETAIL)
W	VARIABLE DEPTH ASPHALT PAVEMENT (SEE WEDGING DETAIL)

NOTE: PAVEMENT EDGE SLOPES ARE 1:1 UNLESS SHOWN OTHERWISE.

** - SEE STRUCTURE PLANS

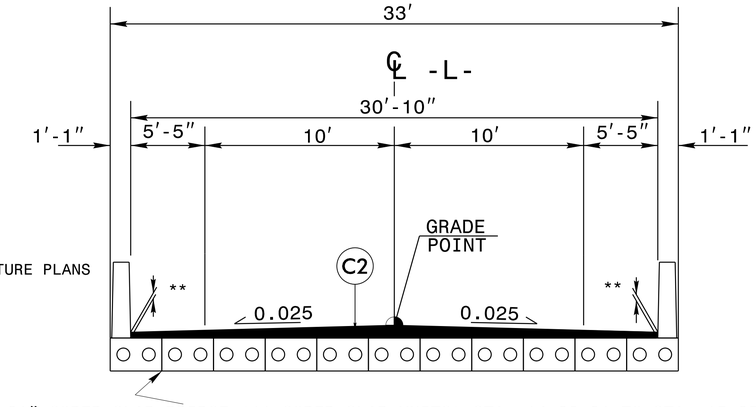

21″ CORED SLAB BRIDGE (11 CORED SLAB UNITS) STA. 14+88.81 TO STA. 15+35.00
24″ CORED SLAB BRIDGE (11 CORED SLAB UNITS) STA. 15+35.00 TO STA. 16+06.19

TYPICAL SECTION NO. 4

USE TYPICAL SECTION NO. 4 AS FOLLOWS:

DETAIL A
TOE PROTECTION
(Not to Scale)

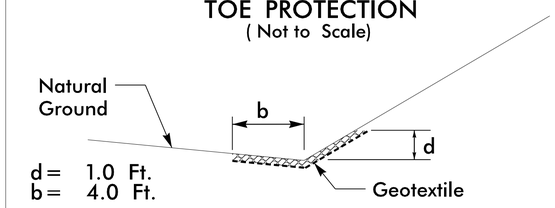

d = 1.0 Ft.
b = 4.0 Ft.
Type of Liner = Class B Rip–Rap

STA 16+15 TO STA. 16+74 –L– RT; 24 TONS CL. B, 46 SY GEO
STA 16+26 TO STA. 16+80 –L– LT; 22 TONS CL. B, 42 SY GEO
STA 13+00 TO STA. 13+15 –L– LT; 6 TONS CL. B, 12 SY GEO
STA 13+58 TO STA. 13+75 –L– LT; 7 TONS CL. B, 13 SY GEO
STA 13+04 TO STA. 13+28 –L– RT; 10 TONS CL. B, 19 SY GEO
STA 13+55 TO STA. 13+75 –L– RT; 8 TONS CL. B, 16 SY GEO

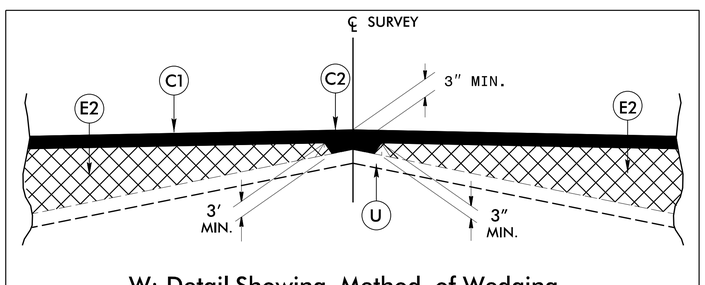

W: Detail Showing Method of Wedging

(SF–320064): REMOVE AND REPLACE CULVERT INLET AND OUTLET CHANNEL DETAILS

INLET TYPICAL
(LT TO RT LOOKING DOWNSTREAM)
NOT TO SCALE

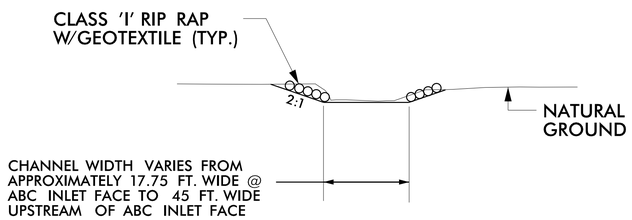

EST TON CLASS 'I' RIP RAP = 21 TONS
EST GEOTEXTILE = 32 SY

OUTLET TYPICAL
(LT TO RT LOOKING DOWNSTREAM)
NOT TO SCALE

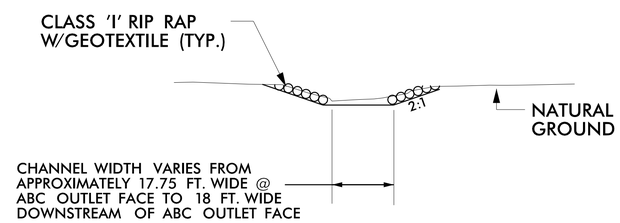

EST TON CLASS 'I' RIP RAP = 23 TONS
EST GEOTEXTILE = 33 SY

STATE OF NORTH CAROLINA
DEPT. OF TRANSPORTATION
DIVISION OF HIGHWAYS
RALEIGH, N.C.

ROADWAY DETAIL DRAWING FOR
STRUCTURE ANCHOR UNITS
GUARDRAIL ANCHOR UNIT, TYPE III
FOR ATTACHMENT TO RAIL ON BRIDGE

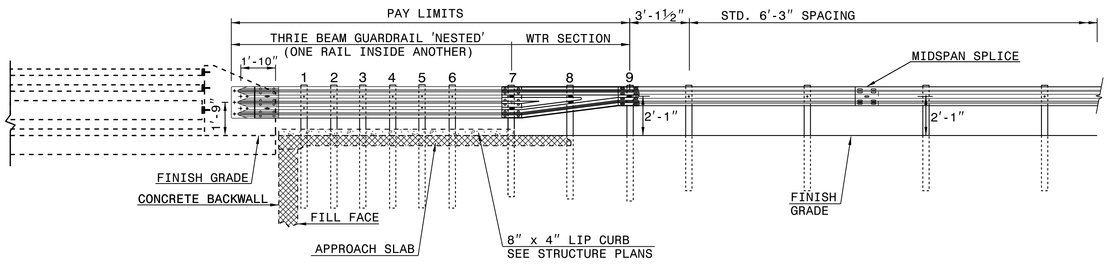

ELEVATION

NOTE:
**POST NOT REQUIRED FOR SKEW ANGLES GREATER THAN 150° OR LESS THAN 30° UNLESS OTHERWISE DIRECTED BY THE ENGINEER.
*THE DISTANCE FROM END OF BRIDGE RAIL TO CENTER LINE OF THE FIRST POST SHOULD BE 11½" IF CONCRETE BACKWALL IS NOT PRESENT.
-SHOULDER BERM GUTTER MUST BE INSTALLED TO THE LIMITS 8" x 4" LIP CURB IS SHOWN IF ANCHOR UNIT IS NOT ADJACENT TO AN APPROACH SLAB.
-MEASURE GUARDRAIL HEIGHT FROM THE TOP OF ADJACENT SURFACE (SHOULDER, BERM, OR GUTTER).
-LAP JOINTS IN THE DIRECTION OF TRAFFIC FLOW.
-SEE SHEET 3 FOR POST SECTIONS 1 THRU 9.

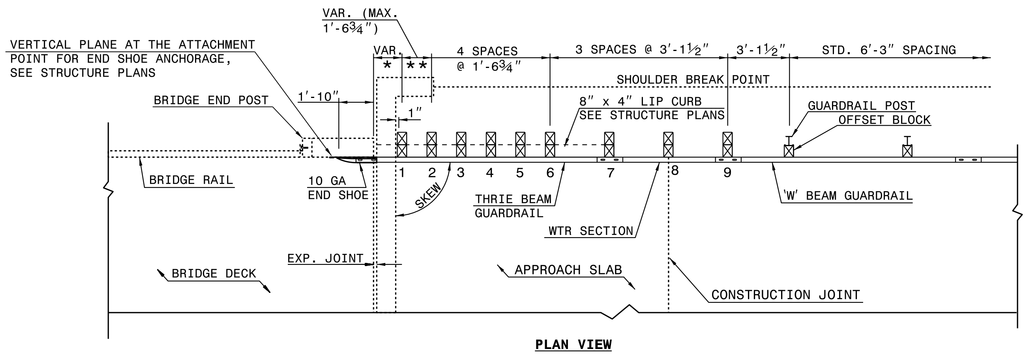

PLAN VIEW

GUARDRAIL ANCHOR UNIT, TYPE III FOR ATTACHMENT TO RAIL ON BRIDGE

SHEET 1 OF 7
862D03

STATE OF NORTH CAROLINA
DEPT. OF TRANSPORTATION
DIVISION OF HIGHWAYS
RALEIGH, N.C.

ROADWAY DETAIL DRAWING FOR
STRUCTURE ANCHOR UNITS
GUARDRAIL ANCHOR UNIT, TYPE III
FOR ATTACHMENT TO RAIL ON BRIDGE

SHEET 1 OF 7
862D03

STATE OF NORTH CAROLINA
DEPT. OF TRANSPORTATION
DIVISION OF HIGHWAYS
RALEIGH, N.C.

ROADWAY DETAIL DRAWING FOR
STRUCTURE ANCHOR UNITS
GUARDRAIL ANCHOR UNIT, TYPE III FOR ATTACHMENT TO
RAIL ON BRIDGE - SUB REGIONAL TIER

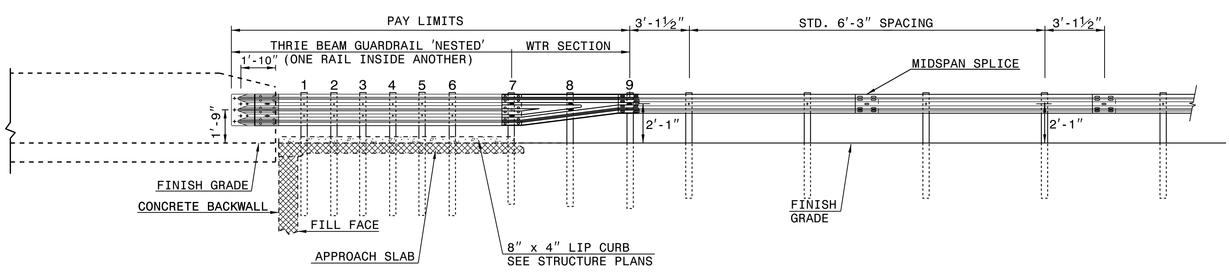

ELEVATION

NOTE:
**POST NOT REQUIRED FOR SKEW ANGLES GREATER THAN 150° OR LESS THAN 30° UNLESS OTHERWISE DIRECTED BY THE ENGINEER.
*THE DISTANCE FROM END OF BRIDGE RAIL TO CENTER LINE OF THE FIRST POST SHOULD BE 11½" IF CONCRETE BACKWALL IS NOT PRESENT.
-SHOULDER BERM GUTTER MUST BE INSTALLED TO THE LIMITS 8" x 4" LIP CURB IS SHOWN IF ANCHOR UNIT IS NOT ADJACENT TO AN APPROACH SLAB.
-MEASURE GUARDRAIL HEIGHT FROM THE TOP OF ADJACENT SURFACE (SHOULDER, BERM, OR GUTTER).
-LAP JOINTS IN THE DIRECTION OF TRAFFIC FLOW.
-SEE SHEET 3 FOR POST SECTIONS 1 THRU 9.

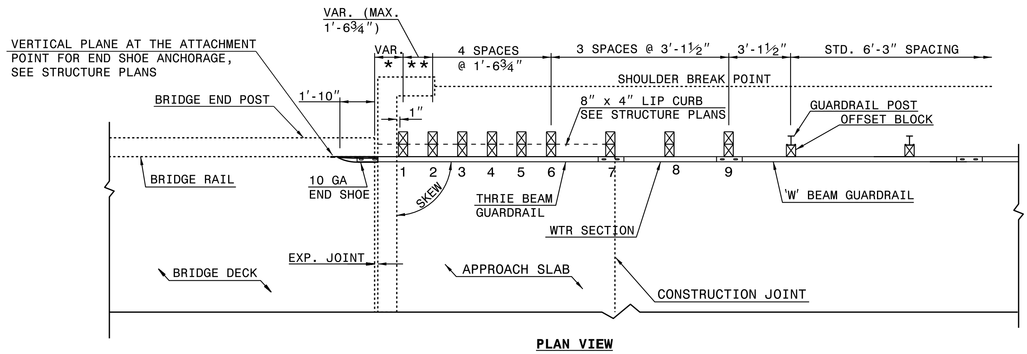

PLAN VIEW

GUARDRAIL ANCHOR UNIT, TYPE III FOR ATTACHMENT TO RAIL ON BRIDGE - SUB REGIONAL TIER

SHEET 2 OF 7
862D03

ROADWAY DETAIL DRAWING FOR
STRUCTURE ANCHOR UNITS
GUARDRAIL ANCHOR UNIT, TYPE III FOR ATTACHMENT TO
RAIL ON BRIDGE - SUB REGIONAL TIER

SHEET 2 OF 7
862D03

SEE TITLE BLOCK

ORIGINAL BY: J. HOWERTON DATE: 06-22-12
MODIFIED BY: DATE:
CHECKED BY: DATE:
FILE SPEC.:

CONTRACT STANDARDS AND DEVELOPMENT UNIT
Office 919-707-6950 FAX 919-250-4119

DOCUMENT NOT CONSIDERED FINAL UNLESS ALL SIGNATURES COMPLETED

SEAL 022966 NORTH CAROLINA PROFESSIONAL ENGINEER
Jason L. Howerton
3/17/2020

PROJECT REFERENCE NO.: B-6002
SHEET NO.: 2C-1

PROJECT REFERENCE NO.	SHEET NO.
B-6002	2C-2

DOCUMENT NOT CONSIDERED FINAL UNLESS ALL SIGNATURES COMPLETED

STATE OF NORTH CAROLINA
DEPT. OF TRANSPORTATION
DIVISION OF HIGHWAYS
RALEIGH, N.C.

ROADWAY DETAIL DRAWING FOR
GUARDRAIL INSTALLATION

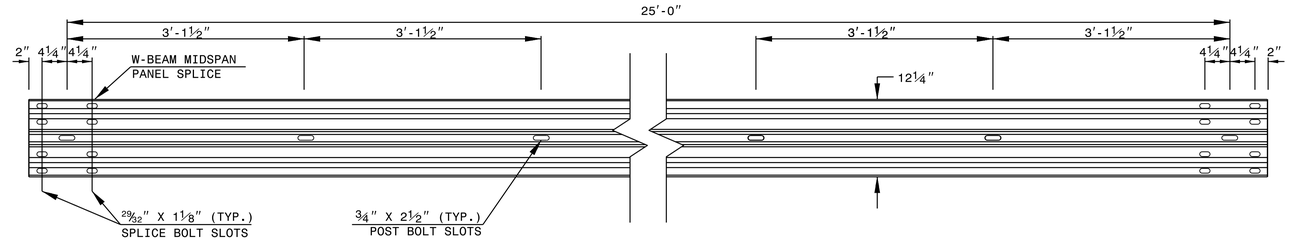

STANDARD W-BEAM GUARDRAIL

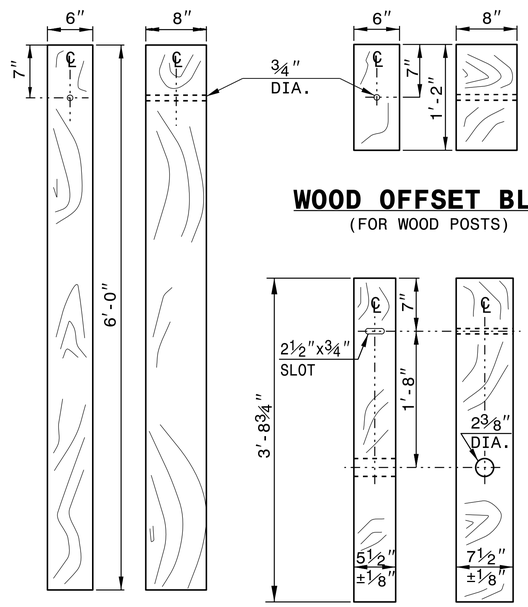

STANDARD LINE POST

WOOD OFFSET BLOCK
(FOR WOOD POSTS)

SHORT WOOD BREAKAWAY POST

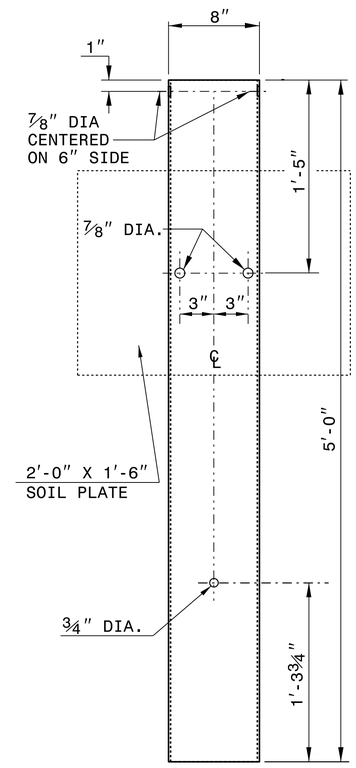

STEEL TUBE
TS 6"x8"x0.1875"

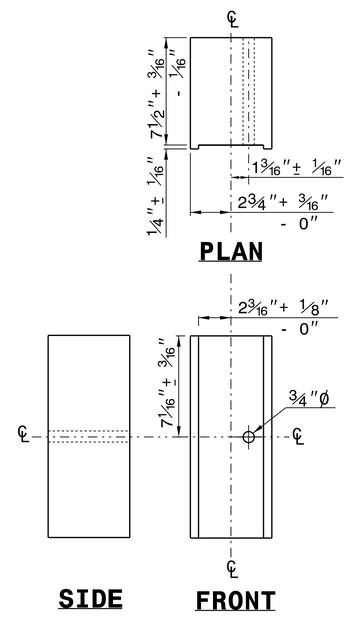

ROUTED OFFSET BLOCK

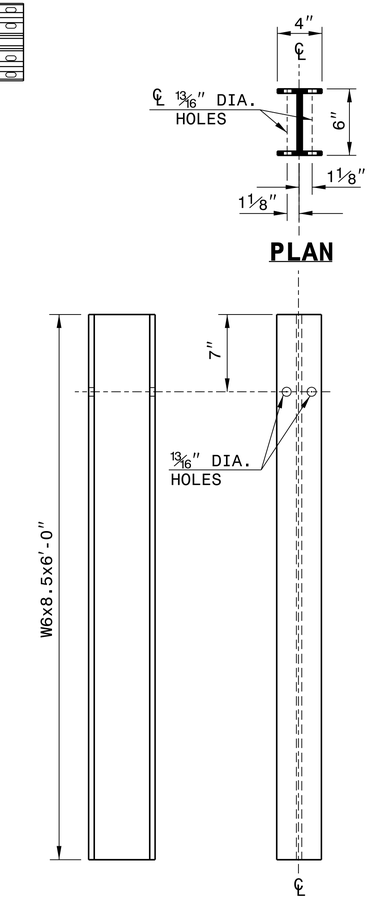

"W6" STEEL POST

SYSTEM PARTS

SHEET 6 OF 8
862D02

STATE OF NORTH CAROLINA
DEPT. OF TRANSPORTATION
DIVISION OF HIGHWAYS
RALEIGH, N.C.

ROADWAY DETAIL DRAWING FOR
GUARDRAIL INSTALLATION

SHEET 6 OF 8
862D02

DocuSigned by: Joel S. Howerton
NORTH CAROLINA PROFESSIONAL SEAL 022966 ENGINEER JOEL S. HOWERTON
1/7/2020

CONTRACTS STANDARDS AND DEVELOPMENT UNIT
Office 919-707-6950 FAX 919-250-4119

SEE TITLE BLOCK

ORIGINAL BY: J.HOWERTON DATE: 3-7-2018
MODIFIED BY: DATE:
CHECKED BY: DATE:
FILE SPEC.:

PROJECT REFERENCE NO.	SHEET NO.
B-6002	2C-3

STATE OF
NORTH CAROLINA
DEPT. OF TRANSPORTATION
DIVISION OF HIGHWAYS
RALEIGH, N.C.

SPECIAL DETAIL FOR
GUARDRAIL PLACEMENT
25'-0" CLEAR SPAN

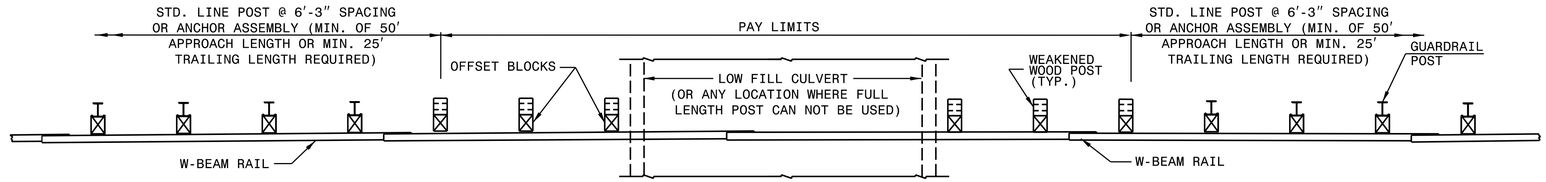

PLAN

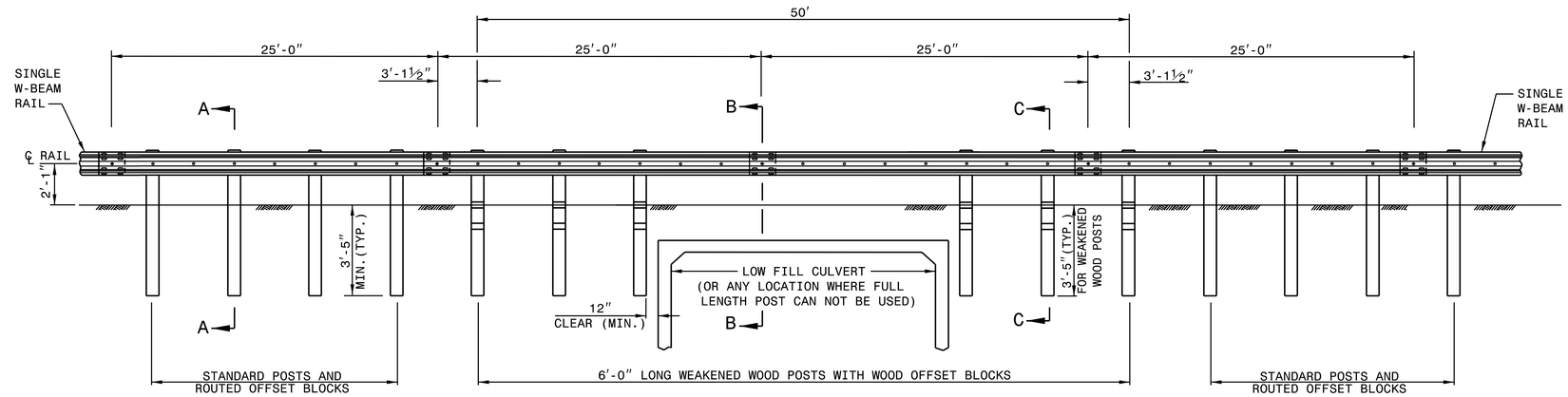

ELEVATION
25'-0" GUARDRAIL SPAN

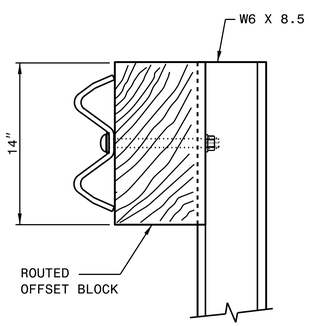

SECTION A-A

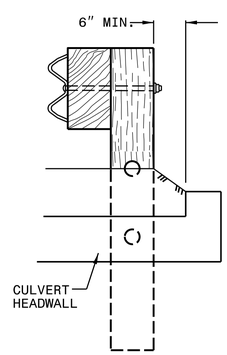

SECTION B-B

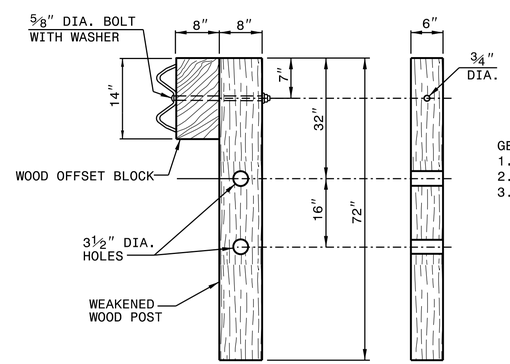

SECTION C-C **FRONT**
WEAKENED WOOD POST

GENERAL NOTES:
1. LAP RAIL IN THE DIRECTION OF TRAFFIC FLOW.
2. SEE ROADWAY PLANS FOR LOCATIONS AND CONTINUATION OF RAIL OR END SECTIONS.
3. MINIMUM DISTANCE OF 5 FEET BEHIND THE GUARDRAIL SHOULD BE CLEAR OF ANY FIXED-OBJECT HAZARDS THAT COULD SNAG AN IMPACTING VEHICLE.

SHEET - OF -
862D01

STATE OF
NORTH CAROLINA
DEPT. OF TRANSPORTATION
DIVISION OF HIGHWAYS
RALEIGH, N.C.

SPECIAL DETAIL FOR
GUARDRAIL PLACEMENT
25'-0" CLEAR SPAN

SHEET - OF -
862D01

DocuSigned by:
Joel S. Howerton
NORTH CAROLINA PROFESSIONAL SEAL 022966 ENGINEER JOEL S. HOWERTON
1/7/2020

DOCUMENT NOT CONSIDERED FINAL UNLESS ALL SIGNATURES COMPLETED

CONTRACTS STANDARDS AND DEVELOPMENT UNIT
Office 919-707-6950 FAX 919-250-4119

25'-0" CLEAR SPAN GUARDRAIL PLACEMENT

ORIGINAL BY: _____ DATE: _____
MODIFIED BY: _____ DATE: _____
CHECKED BY: _____ DATE: _____
FILE SPEC.: _____

12/06/07

COMPUTED BY: SLK DATE: 01/08/19
CHECKED BY: GSP DATE: 01/08/19

STATE OF NORTH CAROLINA
DIVISION OF HIGHWAYS

BRIDGE #320064

PROJECT REFERENCE NO.	SHEET NO.
B-6002	3

DOCUMENT NOT CONSIDERED FINAL UNLESS ALL SIGNATURES COMPLETED

WETHERILL ENGINEERING
1223 Jones Franklin Rd.
Raleigh, N.C. 27606
License No. F-0377
Bus: 919 851 8077
Fax: 919 851 8107
TRANSPORTATION PLANNING/DESIGN - BRIDGE/STRUCTURE DESIGN
CIVIL/SITE DESIGN - GIS/GPS - CONSTRUCTION OBSERVATION

SUMMARY OF EARTHWORK

STATION	STATION	UNCL. EXCAV.	EMBANK. +%	BORROW	WASTE
-L- STA. 11+89.00	-L- STA. 14+88.81 (BEGIN BRIDGE)	51	314	263	
SUBTOTALS:		51	314	263	
-L- STA. 16+59.06 EXIST. CULVERT FILL			171	171	
-L- STA. 16+06.19 (END BRIDGE)	-L- STA. 18+90.00	42	339	297	
SUBTOTALS:		42	510	468	
PROJECT SUBTOTALS:		93	824	731	
EST. 5% TO REPLACE TOP SOIL ON BORROW PIT				37	
GRAND TOTALS:		93	824	767	
SAY:		100		800	

NOTE: Earthwork quantities are calculated by the Roadway Design Unit. These earthwork quantities are based in part on subsurface data provided by the Geotechnical Engineering Unit.

Approximate quantities only. Unclassified excavation, borrow excavation, shoulder borrow, fine grading, clearing and grubbing,breaking of existing pavement and removal of existing pavement will be paid for at the lump sum price for "Grading".

ASPHALT PAVEMENT REMOVAL SUMMARY

SURVEY LINE	STATION	STATION	LOCATION LT/RT/CL	YD^2
-L-	13+17.00	13+60.00	CL	94.30
-L-	14+38.00	14+88.81	CL	134.90
-L-	16+06.19	17+57.00	CL	340.61
			TOTAL:	569.80
			SAY:	570

SHOULDER BERM GUTTER SUMMARY

SURVEY LINE	STATION	STATION	LENGTH
-L- RT.	14+44.00	14+77.94	33.94′
-L- LT.	14+44.00	14+77.94	33.94′
-L- RT.	16+17.06	16+37.00	19.94′
-L- LT.	16+17.06	16+50.00	32.94′
			TOTAL: 120.76′
			SAY: 121′

SUB-REGIONAL & REGIONAL LIST OF PIPES, ENDWALLS, ETC. (FOR PIPES 48" & UNDER)

NOTE: Invert Elevations are for Bid Purposes only and shall not be used for project construction stakeout. See "Standard Specifications For Roads and Structures, Section 300-5".

STATION	LOCATION (LT,RT, OR CL)	STRUCTURE NO.		TOP ELEVATION	INVERT ELEVATION	INVERT ELEVATION	SLOPE CRITICAL	DRAINAGE PIPE (RCP, CSP, CAAP, HDPE, or PVC)												C.S. PIPE							R.C. PIPE (CLASS III)							R.C. PIPE (CLASS IV)							
SIZE								12″	15″	18″	24″	30″	36″	42″	48″					12″	15″	18″	24″	36″	42″	48″	15″	18″	24″	30″	36″	42″	48″	12″	15″	18″	24″	30″	36″	42″	48″
THICKNESS OR GAUGE		FROM	TO													DO NOT USE RCP	DO NOT USE CSP	DO NOT USE CAAP	DO NOT USE HDPE	.064	.064	.064	.064	.079	.109	.109															
-L- 14+49	LT.	401		63.3	60.3																																				
-L- 14+49	CL	401	405		60.3	60.2																													28′						
-L- 14+49	RT.	405		63.3	60.2																																				
-L- 14+49	RT.	405	406		60.2	59.0			36′																																
-L- 16+34	RT.	415		63.5	60.5																																				
-L- 16+34	RT.	415	416		60.5	56.4															28′																				
-L- 16+44	LT.	410		63.4	60.4																																				
-L- 16+44	LT.	410	411		60.4	56.5															24′																				
TOTAL									36′												52′														28′						

STATION	**″ R. C. PIPE (CLASS V)	**″ R. C. PIPE CULVERTS, CONTRACTOR DESIGN PIPE	**″ R. C. PIPE CULVERTS, CONTRACTOR DESIGN PIPE	15″ SIDE DRAIN PIPE	18″ SIDE DRAIN PIPE	ENDWALLS STD. 838.01, STD. 838.11 OR STD. 838.80 (UNLESS NOTED OTHERWISE) CU. YDS. R.C.P.	C.S.P.	QUANTITIES FOR DRAINAGE STRUCTURES PER EACH (0′ THRU 5.0′)	* TOTAL L.F. FOR PAY QUANTITY SHALL BE COL. 'A' + (1.3 X COL.'B') LIN. *FT. A 5.0′ THRU 10.0′	B 10.0′ AND ABOVE	C.B. STD. 840.01 OR STD. 840.02	FRAME, GRATES AND HOOD STANDARD 840.03 TYPE OF GRATE E	F	G		CONCRETE TRANSITIONAL SECTION CATCH BASIN	DROP INLET	G.D.I. TYPE "B" STD. 840.18 OR 840.27	G.D.I. (N.S.) FRAME WITH TWO GRATES STD. 840.24	T.B.D.I. STD. 840.35	G.D.I. (N.S.) FRAME WITH TWO GRATES STD. 840.29	M.H. FRAME & COVER STD. 840.54	T.B.J.B. STD. 840.34	CSP ELBOWS NO. & SIZE	CONC. COLLARS CL. "B" C.Y. STD 840.72	CONC. & BRICK PIPE PLUG, C.Y. STD. 840.71	PIPE REMOVAL LIN.FT.	REMARKS
-L- 14+49								1												1	1							
-L- 14+49																												
-L- 14+49								1												1	1							
-L- 14+49																												
-L- 16+34								1												1	1							
-L- 16+34																								2@15″				
-L- 16+44								1												1	1							
-L- 16+44																								2@15″				
TOTAL								4												4	4			4@15″				

ABBREVIATIONS

C.B.	CATCH BASIN
N.D.I.	NARROW DROP INLET
D.I.	DROP INLET
G.D.I.	GRATED DROP INLET
G.D.I. (N.S.)	GRATED DROP INLET (NARROW SLOT)
J.B.	JUNCTION BOX
M.H.	MANHOLE
T.B.D.I.	TRAFFIC BEARING DROP INLET
T.B.J.B.	TRAFFIC BEARING JUNCTION BOX

"N" = DISTANCE FROM EDGE OF LANE TO FACE OF GUARDRAIL.
TOTAL SHOULDER WIDTH = DISTANCE FROM EDGE OF TRAVEL LANE TO SHOULDER BREAK POINT.
FLARE LENGTH = DISTANCE FROM LAST SECTION OF PARALLEL GUARDRAIL TO END OF GUARDRAIL.
W = TOTAL WIDTH OF FLARE FROM BEGINNING OF TAPER TO END OF GUARDRAIL.
G = GATING IMPACT ATTENUATOR TYPE 350
NG = NON-GATING IMPACT ATTENUATOR TYPE 350

GUARDRAIL SUMMARY

SURVEY LINE	BEG. STA.	END STA.	LOCATION	LENGTH			WARRANT POINT		"N" DIST. FROM E.O.L.	TOTAL SHOUL. WIDTH	FLARE LENGTH		W		ANCHORS									IMPACT ATTENUATOR TYPE 350			SINGLE FACED GUARDRAIL	REMOVE EXISTING GUARDRAIL	REMOVE AND STOCKPILE EXISTING GUARDRAIL	REMARKS
				STRAIGHT	SHOP CURVED	DOUBLE FACED	APPROACH END	TRAILING END			APPROACH END	TRAILING END	APPROACH END	TRAILING END	XI MOD	TYPE III	GREU TL-2	AT-1		CAT-1	VI MOD	BIC	AT-1	EA	G	NG				
-L-	12+45.06	14+88.81	LT.	243.75′				14+88.81	5′-5″	8′-5″		25′-0″		0′-6″		1	1													
-L-	14+99.38	15+74.38	RT.	150.00′	50.00′		14+88.81		5′-5″	8′-5″	25′-0″		0′-6″			1	1													
-L-	16+06.19	16+74.94	LT.	68.75′			16+41.63		5′-5″	8′-5″	25′-0″		0′-6″			1	1													
-L-	16+06.19	16+62.44	RT.	56.25′				16+41.63	5′-5″	8′-5″		25′-0″		0′-6″		1	1													
			PROJECT SUBTOTAL	518.75′	50.00′											4	4													
		LESS ANCHOR DEDUCTIONS		(–)175.00′																										
		GR PROJECT TOTAL		343.75′																										
			PERMANENT GR SAY	350.00′	50.00′	ADDITIONAL GUARDRAIL POSTS = 5 EACH													GUARDRAIL ANCHOR DEDUCTIONS											
																			TYPE III = 4 @ 18.75′ = 75′											
																			GREU TL-2 = 4 @ 25′ = 100′											
																			TOTAL DEDUCTIONS = 175.00′											

12/16/2019
\Proj\320064_Rdy_sum.dgn
USER:GPurvis

WETHERILL ENGINEERING
1223 Jones Franklin Rd.
Raleigh, N.C. 27606
License No. F-0377
Bus: 919 851 8077
Fax: 919 851 8107
TRANSPORTATION PLANNING/DESIGN - BRIDGE/STRUCTURE DESIGN
CIVIL/SITE DESIGN - GIS/GPS - CONSTRUCTION OBSERVATION

BRIDGE 320064

FINAL PLANS

DOCUMENT NOT CONSIDERED FINAL UNLESS ALL SIGNATURES COMPLETED

PROJECT REFERENCE NO.	SHEET NO.
B-6002	4
R/W SHEET NO.	

ROADWAY DESIGN ENGINEER 1/14/2020 — NORTH CAROLINA PROFESSIONAL SEAL 022999 ENGINEER GREG S. PURVIS — Greg S. Purvis

HYDRAULICS ENGINEER 1/15/2020 — NORTH CAROLINA PROFESSIONAL SEAL 044561 ENGINEER HARMINDER SINGH — Harminder Singh

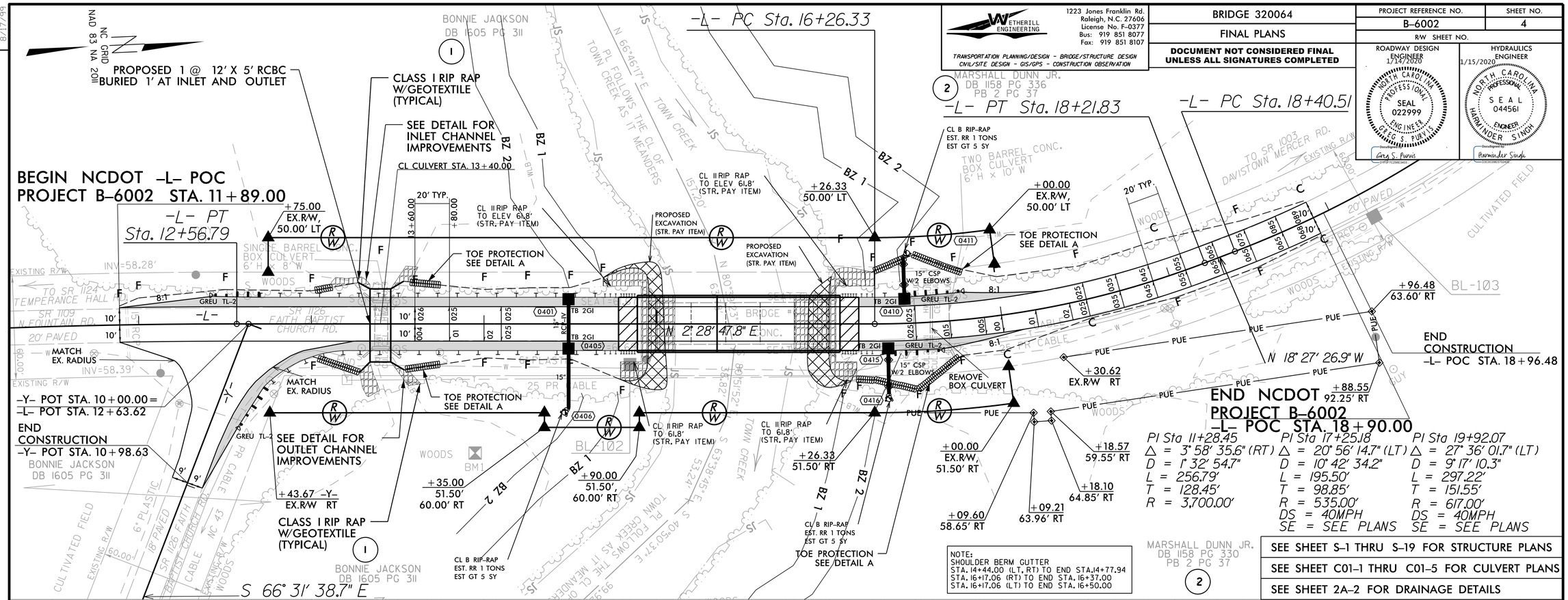

PI Sta 11+28.45	PI Sta 17+25.18	PI Sta 19+92.07
Δ = 3° 58' 35.6" (RT)	Δ = 20° 56' 14.7" (LT)	Δ = 27° 36' 01.7" (LT)
D = 1° 32' 54.7"	D = 10° 42' 34.2"	D = 9° 17' 10.3"
L = 256.79'	L = 195.50'	L = 297.22'
T = 128.45'	T = 98.85'	T = 151.55'
R = 3,700.00'	R = 535.00'	R = 617.00'
	DS = 40MPH	DS = 40MPH
	SE = SEE PLANS	SE = SEE PLANS

NOTE:
SHOULDER BERM GUTTER
STA. 14+44.00 (LT, RT) TO END STA.14+77.94
STA. 16+17.06 (RT) TO END STA. 16+37.00
STA. 16+17.06 (LT) TO END STA. 16+50.00

SEE SHEET S-1 THRU S-19 FOR STRUCTURE PLANS
SEE SHEET C01-1 THRU C01-5 FOR CULVERT PLANS
SEE SHEET 2A-2 FOR DRAINAGE DETAILS

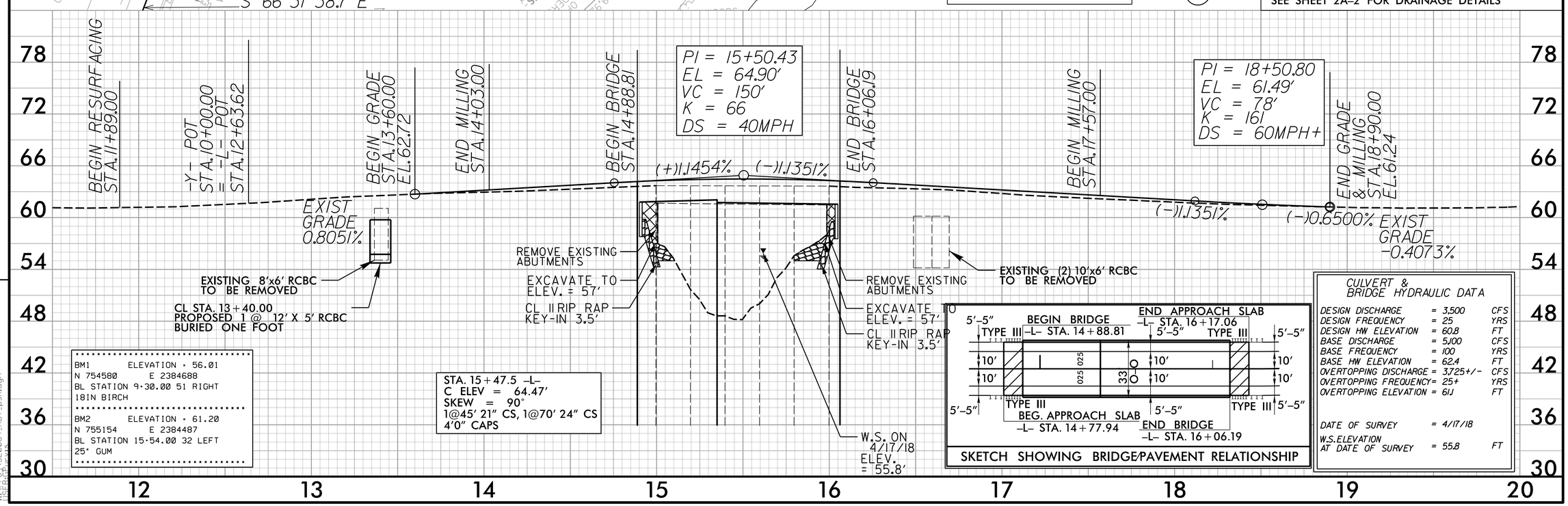

CULVERT & BRIDGE HYDRAULIC DATA

DESIGN DISCHARGE	= 3,500	CFS
DESIGN FREQUENCY	= 25	YRS
DESIGN HW ELEVATION	= 60.8	FT
BASE DISCHARGE	= 5,100	CFS
BASE FREQUENCY	= 100	YRS
BASE HW ELEVATION	= 62.4	FT
OVERTOPPING DISCHARGE	= 3,725+/-	CFS
OVERTOPPING FREQUENCY	= 25+	YRS
OVERTOPPING ELEVATION	= 61.1	FT
DATE OF SURVEY	= 4/17/18	
W.S. ELEVATION AT DATE OF SURVEY	= 55.8	FT

REVISIONS

8/17/99

12/16/2019
R:\Roadway\Proj\B6002_320064_RDY_psh.dgn
USER: gpurvis

STATE	STATE PROJECT REFERENCE NO.	SHEET NO.	TOTAL SHEETS
N.C.	B-6002	RW01	7

TIP PROJECT: B-6002

STATE OF NORTH CAROLINA
DIVISION OF HIGHWAYS

SURVEY CONTROL, EXISTING CENTERLINES,
RIGHT OF WAY, EASEMENTS AND PROPERTY TIES

EDECOMBE COUNTY

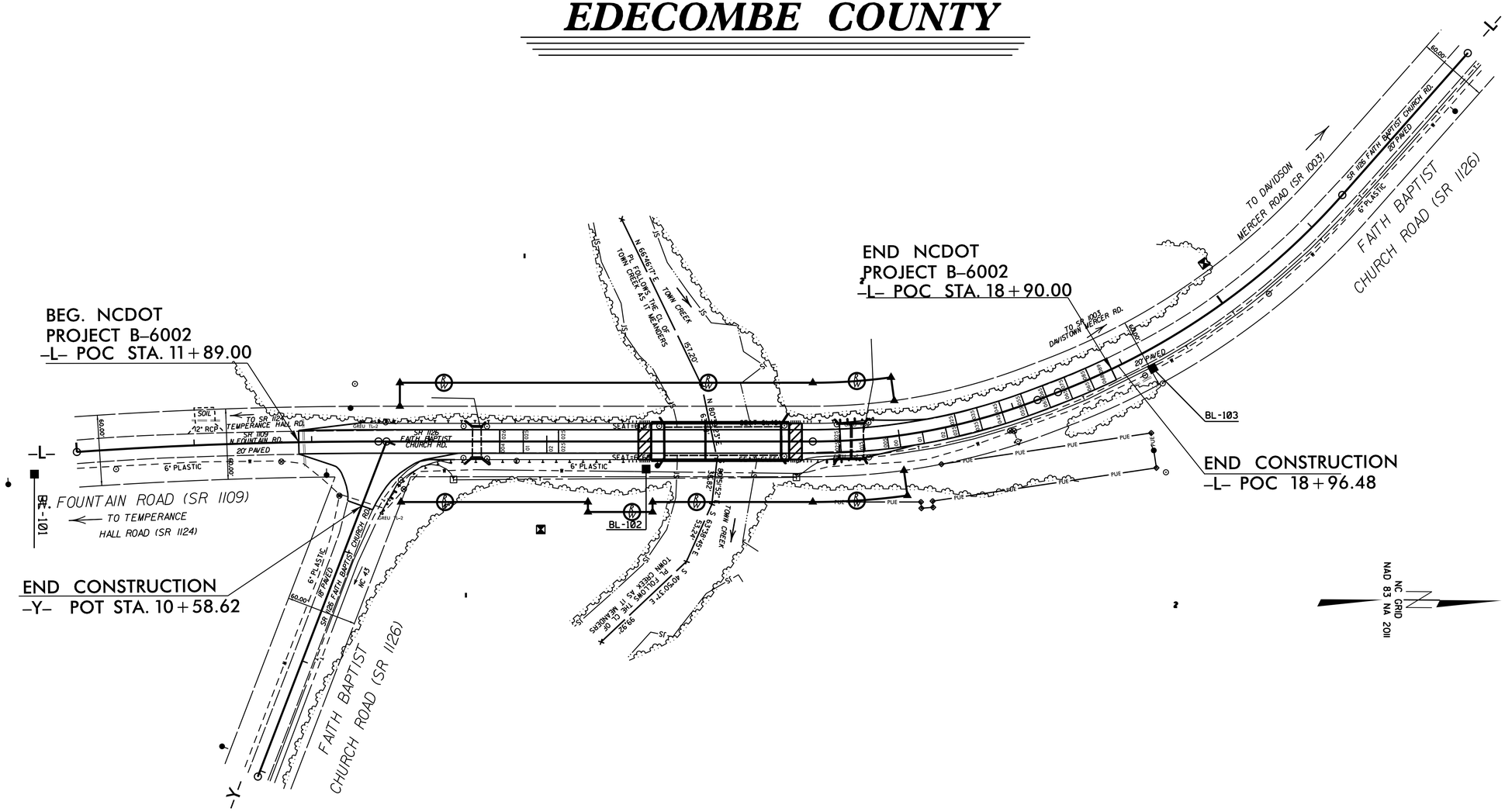

GRAPHIC SCALE

50 25 0 50 100
PLANS

DATUM DESCRIPTION

THE LOCALIZED COORDINATE SYSTEM DEVELOPED FOR THIS PROJECT
IS BASED ON THE STATE PLANE COORDINATES ESTABLISHED BY
NCGS FOR MONUMENT "320064-1"
WITH NAD 83/NSRS 2011 STATE PLANE GRID COORDINATES OF
NORTHING: 755,584.449(ft) EASTING: 2384131.554(ft)
ELEVATION: 61.95(ft)
THE AVERAGE COMBINED GRID FACTOR USED ON THIS PROJECT
(GROUND TO GRID) IS: 0.99992407
THE N.C. LAMBERT GRID BEARING AND
LOCALIZED HORIZONTAL GROUND DISTANCE FROM
"320064-1" TO -L- STATION 10+00.00 IS
S 18°45'11" W 1,473.679(ft)
ALL LINEAR DIMENSIONS ARE LOCALIZED HORIZONTAL DISTANCES
VERTICAL DATUM USED IS NAVD 88 / GEOID G12NC

Prepared in the Office of:

HAWKEYE GEOMATICS, PC
135.5 MAIN STREET
OXFORD, NC 27565

2018 STANDARD SPECIFICATIONS

RIGHT OF WAY DATE: _____ LETTING DATE: _____

PROFESSIONAL LAND SURVEYOR

NORTH CAROLINA PROFESSIONAL L-5172 LAND SURVEYOR AARON J. PERKINSON

DocuSigned by:
Aaron Perkinson
AA26A78ED0514F0...
1/16/2020
SIGNATURE: Date:

STATE OF NORTH CAROLINA DEPARTMENT OF TRANSPORTATION

09/08/99

$$$$$$$SYSTIME$$$$$$$
$$$$$$$$$$$$$$$$$$DGN$$$$$$$$$$$$$$$$$$
$$$$$USERNAME$$$$

PROJECT REFERENCE NO.	SHEET NO.
B-6002	RW02C-1
Location and Surveys	

SURVEY CONTROL SHEET

W/ EXISTING CENTERLINE ALIGNMENTS PRIOR TO CONSTRUCTION

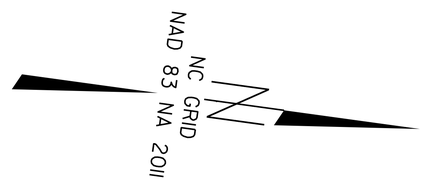

OFFSITE PRIMARY GPS CONTROL:
320064-2
N: 756005.398
E: 2383680.673
ELEV: 66.78

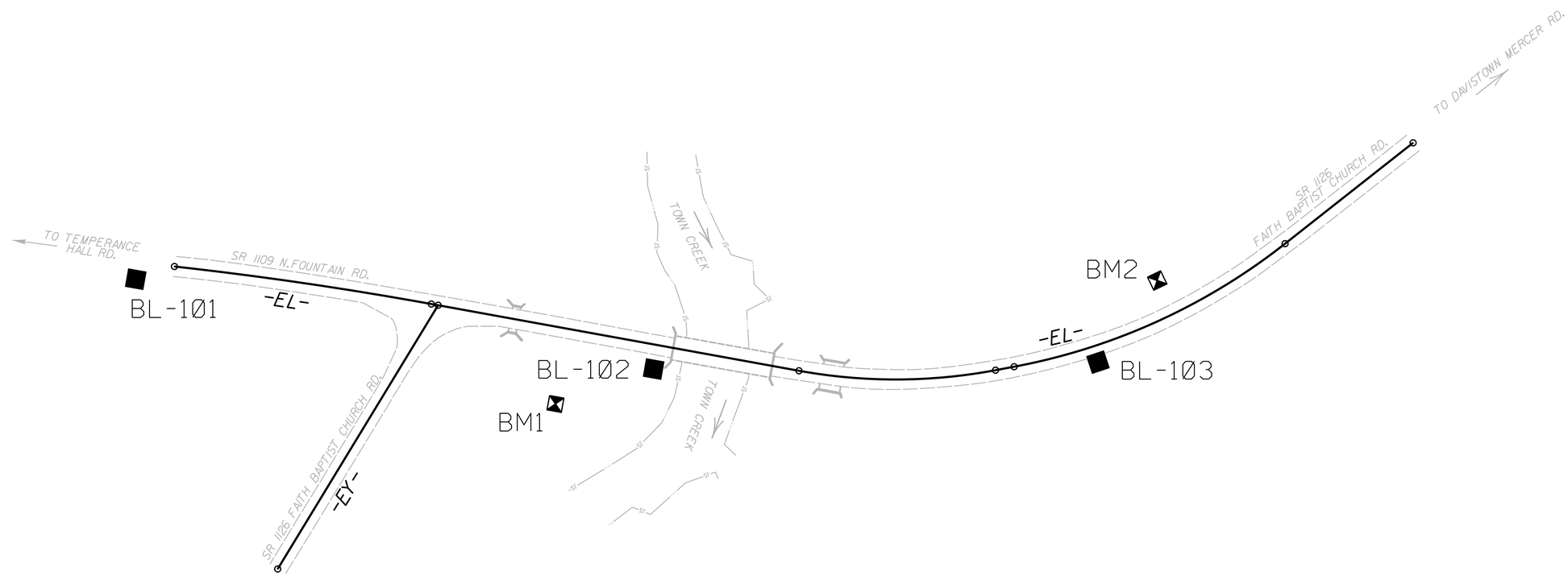

DATUM DESCRIPTION

THE LOCALIZED COORDINATE SYSTEM DEVELOPED FOR THIS PROJECT IS BASED ON THE STATE PLANE COORDINATES ESTABLISHED BY NCGS FOR MONUMENT "320064-1"
WITH NAD 83/NA 2011 STATE PLANE GRID COORDINATES OF
NORTHING: 755584.449(ft) EASTING: 2384131.554(ft)
ELEVATION: 61.95(ft)
THE AVERAGE COMBINED GRID FACTOR USED ON THIS PROJECT (GROUND TO GRID) IS: 0.99992407
THE N.C. LAMBERT GRID BEARING AND LOCALIZED HORIZONTAL GROUND DISTANCE FROM "320064-1" TO -L- STATION IS
S 18°45'11" E 1,473.679 (FT)
ALL LINEAR DIMENSIONS ARE LOCALIZED HORIZONTAL DISTANCES
VERTICAL DATUM USED IS NAVD 88

NOTES:

1. IF FURTHER INFORMATION REGARDING PROJECT CONTROL IS NEEDED, PLEASE CONTACT THE LOCATION AND SURVEYS UNIT.
2. PROJECT CONTROL WAS ESTABLISHED USING GNSS, THE GLOBAL NAVIGATION SATELLITE SYSTEM.
3. NOTE: DRAWING NOT TO SCALE

PROJECT REFERENCE NO.	SHEET NO.
B-6002	RW02C-02
Location and Surveys	

SURVEY CONTROL SHEET

W/ EXISTING CENTERLINE ALIGNMENTS PRIOR TO CONSTRUCTION

BASELINE DATA

BL

POINT	DESC.	NORTH	EAST	ELEVATION
101	BL-101	754152.0980	2384622.6050	60.50
102	BL-102	754672.2170	2384640.8080	62.23
103	BL-103	755106.7200	2384573.8890	61.76
1	320064-1	755584.4490	2384131.5540	61.95
2	320064-2	756005.3980	2383680.6730	66.78

BENCHMARK DATA

****
BM1 ELEVATION = 56.01
N 754580 E 2384688
BENCHTIE IN 18" BIRCH
****
****
BM2 ELEVATION = 61.20
N 755154 E 2384487
BENCHTIE IN 25" GUM
****

ALIGNMENT DATA

EL

POINT	N	E	BEARING	DIST	DELTA	D	L	T	R
PC	754189.002	2384605.323							
CURVE			N 00°29′30.0" E	256.74	03°58′35.6"(RT)	01°32′54.7"	256.79	128.45	3700.00
PT	754445.735	2384607.527							
LINE			N 02°28′47.8" E	369.54					
PC	754814.924	2384623.516							
CURVE			N 07°59′19.5" W	194.42	20°56′14.7"(LT)	10°42′34.2"	195.50	98.85	535.00
PT	755007.455	2384596.496							
LINE			N 18°27′26.9" W	18.68					
PC	755025.175	2384590.582							
CURVE			N 32°15′27.7" W	294.36	27°36′01.7"(LT)	09°17′10.3"	297.22	151.55	617.00
PT	755274.098	2384433.476							
LINE			N 46°03′28.5" W	161.20					
POT	755385.960	2384317.405							

EY

POINT	N	E	BEARING	DIST
POT	754452.556	2384607.822		
LINE			S 66°31′38.7" E	305.41
POT	754330.906	2384887.964		

PROPOSED ALIGNMENT CONTROL SHEET

PROJECT REFERENCE NO.	SHEET NO.
B-6002	RW02D-01

Location and Surveys

HAWKEYE
GEOMATICS, PC

L

TYPE	STATION	NORTH	EAST
PC	10+00.00	754189.0018	2384605.3235
PT	12+56.79	754445.7352	2384607.5267
PC	16+26.33	754814.9243	2384623.5163
PT	18+21.83	755007.4549	2384596.4965
PC	18+40.51	755025.1749	2384590.5820
PT	21+37.73	755274.0981	2384433.4765
POT	22+98.93	755385.9600	2384317.4055

Y

TYPE	STATION	NORTH	EAST
POT	10+00.00	754452.5557	2384607.8221
POT	13+05.41	754330.9060	2384887.9640

NOTES:

1. PROJECT CONTROL WAS ESTABLISHED USING GNSS, THE GLOBAL NAVIGATION SATELLITE SYSTEM.

2. THE PROPOSED ALIGNMENT CONTROL DATA FOR THIS PROJECT HAS BEEN COMPILED FROM VARIOUS SOURCES. IF FURTHER INFORMATINO REGARDING PROJECT CONTROL IS NEEDED, PLEASE CONTACT THE LOCATION AND SURVEYS UNIT.

REVISIONS

6/2/99

13-JAN-2020 11:37
C:\Users\jpeterson\Documents\Hawkeye Geomatics PC\Projects\2019\NCDOT\b6002\b6002_ls_rw02d-01.dgn
ai_parksize.cnfg AT A1-USR

RIGHT OF WAY CONTROL SHEET

PROJECT REFERENCE NO.	SHEET NO.
B-6002	RW03E-01

Location and Surveys

HAWKEYE
GEOMATICS, PC

PROJECT SURVEYOR

NORTH CAROLINA PROFESSIONAL L-5172 LAND SURVEYOR AARON J. PERKINSON

DOCUMENT NOT CONSIDERED FINAL UNLESS ALL SIGNATURES COMPLETED

ROW MARKER IRON PIN AND CAP-E

ALIGN	STATION	OFFSET	NORTH	EAST
L	12+75.00	-50.00	754466.0873	2384558.3612
L	12+75.00	-30.00	754465.2219	2384578.3425
L	14+35.00	51.50	754621.5453	2384666.6940
L	14+35.00	60.00	754621.1778	2384675.1814
L	14+90.00	60.00	754676.1262	2384677.5612
L	14+90.00	51.50	754676.4940	2384669.0692
L	16+26.33	51.50	754812.6959	2384674.9681
L	16+26.33	-50.00	754817.0878	2384573.5632
L	17+00.00	51.50	754893.3678	2384672.9051
L	17+00.00	-50.00	754883.7986	2384571.8572
L	17+00.00	-30.00	754885.6841	2384591.7681
L	17+00.00	30.00	754891.3408	2384651.5008

ROW MARKER IRON PIN AND CAP-E

ALIGN	STATION	OFFSET	NORTH	EAST
Y	10+43.67	-30.00	754462.6777	2384659.8308

I, Aaron J. Perkinson, a Professional Land Surveyor in the state of North Carolina hereby certify to the best of my knowledge and belief that the following work item(s) (R/W Staking) performed under my responsible charge meet NCDOT Survey Standards as directed in the NCDOT Location & Surveys guidelines and procedures.

I further certify that the right of way and permanent easement points shown herein and outlined in the tables shown hereon (localized coordinates, station/offset) have been checked and are accurate representations of the right of way and permanent easement points depicted on the corresponding highway plans. I also certify that the right of way and permanent easement points shown herein have been field monumented under my supervision from existing survey control provided by others; that the depicted property data shown herein were surveyed by others; and these monuments denote the right of way and easement boundaries at the time of staking which may be subject to change due to right of way revisions (See deeds for final determination).

Witness my original signature, registration number and seal this 13th day of January, 2020.

DocuSigned by:
Aaron Perkinson
AA20A78E0001473...

Professional Land Surveyor PLS # L-5172 Seal

NOTES:

1. IF FURTHER INFORMATION REGARDING PROJECT CONTROL IS NEEDED, PLEASE CONTACT THE LOCATION AND SURVEYS UNIT.

2. PROJECT CONTROL WAS ESTABLISHED USING GNSS, THE GLOBAL NAVIGATION SATELLITE SYSTEM.

REVISIONS

6/2/99

16-JAN-2020 09:45
B:\Users\aperkinson\Documents\Hawkeye Geomatics PC\Projects\2019\NCDOT\b6002\deliverables\1-13-20\b6002_ls_rw03e-1.dgn
aj_perkinson AT A1_USPS

PERMANENT EASEMENT CONTROL SHEET

PROJECT REFERENCE NO.	SHEET NO.
B-6002	RW03E-02

Location and Surveys

HAWKEYE
GEOMATICS, PC

PROJECT SURVEYOR

NORTH CAROLINA PROFESSIONAL L-5172 LAND SURVEYOR AARON J. PERKINSON

DOCUMENT NOT CONSIDERED FINAL
UNLESS ALL SIGNATURES COMPLETED

ROW MARKER PERMANENT EASEMENT-E

ALIGN	STATION	OFFSET	NORTH	EAST
L	17+09.21	63.96	754904.7971	2384684.2497
L	17+09.60	58.65	754904.6342	2384678.9237
L	17+18.10	64.85	754914.7924	2384683.9440
L	17+18.57	59.55	754914.6295	2384678.6180
L	17+30.62	30.00	754923.4304	2384647.5326
L	18+88.55	92.25	755106.0249	2384658.5795
L	18+96.48	63.60	755102.9011	2384628.7425

I, Aaron J. Perkinson , a Professional Land Surveyor in the state of North Carolina hereby certify to the best of my knowledge and belief that the following work item(s) (R/W Staking) performed under my responsible charge meet NCDOT Survey Standards as directed in the NCDOT Location & Surveys guidelines and procedures.

I further certify that the right of way and permanent easement points shown herein and outlined in the tables shown hereon (localized coordinates, station/offset) have been checked and are accurate representations of the right of way and permanent easement points depicted on the corresponding highway plans. I also certify that the right of way and permanent easement points shown herein have been field monumented under my supervision from existing survey control provided by others; that the depicted property data shown herein were surveyed by others; and these monuments denote the right of way and easement boundaries at the time of staking which may be subject to change due to right of way revisions (See deeds for final determination).

Witness my original signature, registration number and seal this 11th day of January, 2020.

DocuSigned by:
Aaron Perkinson
A4DA2BEB2D14F0...

Professional Land Surveyor — PLS # L-5172 — Seal

NOTES:

1. IF FURTHER INFORMATION REGARDING PROJECT CONTROL IS NEEDED, PLEASE CONTACT THE LOCATION AND SURVEYS UNIT.

2. PROJECT CONTROL WAS ESTABLISHED USING GNSS, THE GLOBAL NAVIGATION SATELLITE SYSTEM.

REVISIONS

6/2/99

16-JAN-2020 09:48
C:\Users\aaron.perkinson\Documents\Hawkeye Geomatics PC\Projects\2019\NCDOT\b6002\deliverables\1-13-20\b6002_ls_rw03e-2.dgn
AJ Perkinson AT AJ HGPC

PROJECT REFERENCE NO.	SHEET NO.
B-6002	RW04

Location and Surveys

HAWKEYE
GEOMATICS, PC
135.5 MAIN STREET
OXFORD, NC 27565

PROJECT SURVEYOR

NORTH CAROLINA PROFESSIONAL L-5172 LAND SURVEYOR SEAL

DOCUMENT NOT CONSIDERED FINAL UNLESS ALL SIGNATURES COMPLETED

I, Aaron J. Perkinson, a Professional Land Surveyor in the state of North Carolina hereby certify to the best of my knowledge and belief that the following work item(s) (R/W Staking) performed under my responsible charge meet NCDOT Survey Standards as directed in the NCDOT Location & Surveys guidelines and procedures.

I further certify that the right of way and permanent easement points shown herein and outlined in the tables shown hereon (localized coordinates, station/offset) have been checked and are accurate representations of the right of way and permanent easement points depicted on the corresponding highway plans. I also certify that the right of way and permanent easement points shown herein have been field monumented under my supervision from existing survey control provided by others; that the depicted property data shown herein were surveyed by others; and these monuments denote the right of way and easement boundaries at the time of staking which may be subject to change due to right of way revisions (See deeds for final determination).

Witness my original signature, registration number and seal this 13th day of January, 2020.

DocuSigned by:
Aaron Perkinson
AA284DED05A69...

L-5172
Professional Land Surveyor PLS # Seal

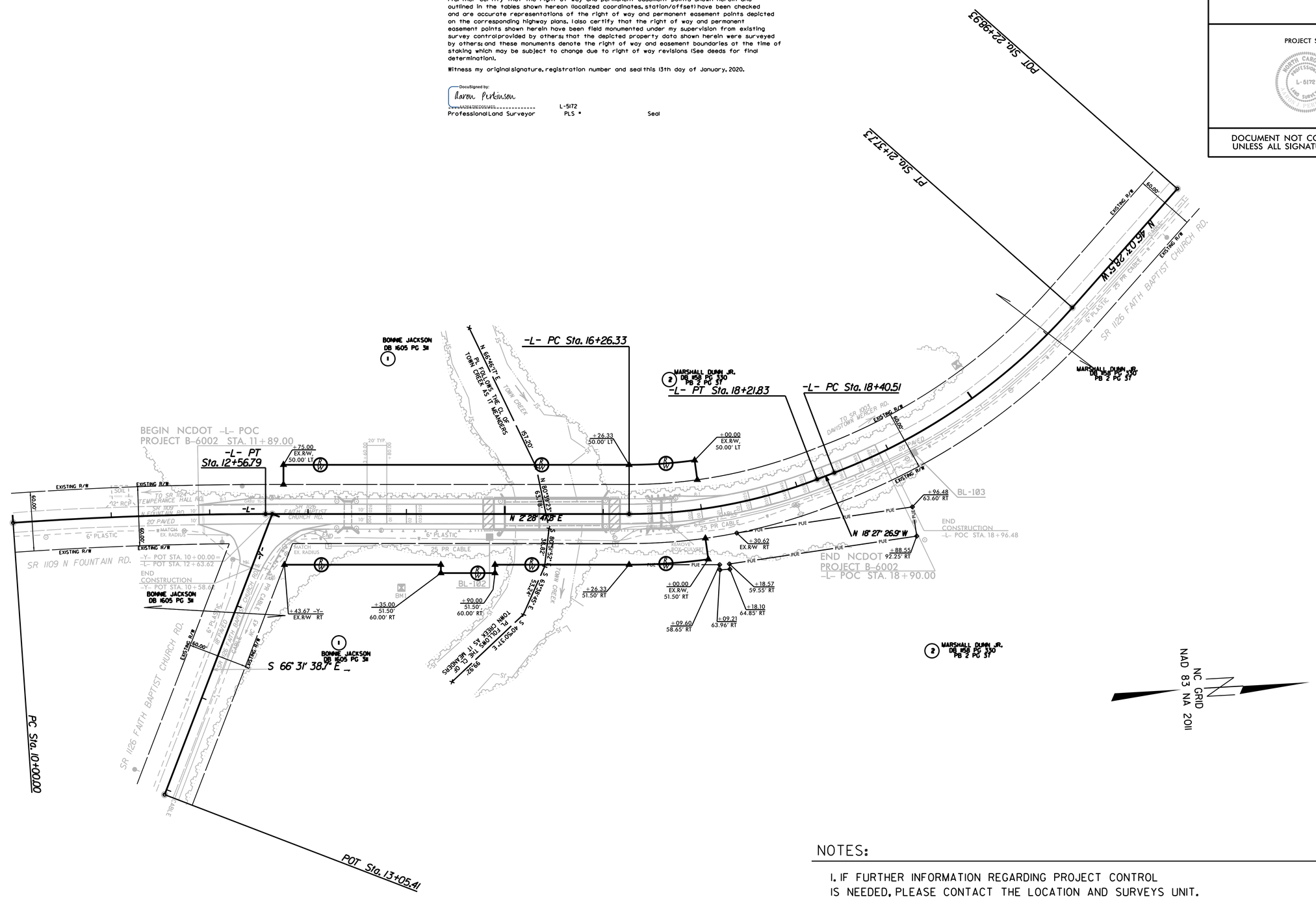

NOTES:

1. IF FURTHER INFORMATION REGARDING PROJECT CONTROL IS NEEDED, PLEASE CONTACT THE LOCATION AND SURVEYS UNIT.

2. PROJECT CONTROL WAS ESTABLISHED USING GNSS, THE GLOBAL NAVIGATION SATELLITE SYSTEM.

REVISIONS

6/2/99

15-JAN-2020 10:03
C:\Users\aaron.perkinson\Documents\Hawkeye Geomatics PC\Projects\2019\NCDOT\b6002\deliverables\1-13-20\b6002_ls_rw04.dgn
AT_A1_HSPF

PROJ. REFERENCE NO.	SHEET NO.
B-6002	TMP-1

ROADWAY STANDARD DRAWINGS

THE FOLLOWING ROADWAY STANDARDS AS SHOWN IN "ROADWAY STANDARD DRAWINGS" - PROJECT SERVICES UNIT - N.C. DEPARTMENT OF TRANSPORTATION - RALEIGH, N.C., DATED JANUARY 2018 ARE APPLICABLE TO THIS PROJECT AND BY REFERENCE HEREBY ARE CONSIDERED A PART OF THESE PLANS:

STD. NO.	TITLE
1101.03	TEMPORARY ROAD CLOSURES
1101.11	TRAFFIC CONTROL DESIGN TABLES
1110.01	STATIONARY WORK ZONE SIGNS
1145.01	BARRICADES
1205.01	PAVEMENT MARKINGS - LINE TYPES & OFFSETS
1205.02	PAVEMENT MARKINGS - TWO-LANE AND MULTI-LANE ROADWAYS
1205.12	PAVEMENT MARKINGS - BRIDGES
1261.01	GUARDRAIL AND BARRIER DELINEATORS - INSTALLATION SPACING
1261.02	GUARDRAIL AND BARRIER DELINEATORS - TYPES AND MOUNTING
1262.01	GUARDRAIL END DELINEATION

GENERAL NOTES / LOCAL NOTES

CHANGES MAY BE REQUIRED WHEN PHYSICAL DIMENSIONS IN THE DETAIL DRAWINGS, STANDARD DETAILS AND ROADWAY DETAILS ARE NOT ATTAINABLE TO MEET FIELD CONDITIONS, OR RESULT IN DUPLICATE, OR UNDESIRED OVERLAPPING OF DEVICES. MODIFICATION MAY INCLUDE: MOVING, SUPPLEMENTING, COVERING OR REMOVAL OF DEVICES AS DIRECTED BY THE ENGINEER.

THE FOLLOWING GENERAL NOTES APPLY AT ALL TIMES FOR THE DURATION OF THE CONSTRUCTION PROJECT EXCEPT WHEN OTHERWISE NOTED IN THE PLAN OR DIRECTED BY THE ENGINEER.

TRAFFIC PATTERN ALTERATIONS

A) NOTIFY THE ENGINEER THIRTY (30) CALENDAR DAYS PRIOR TO ANY TRAFFIC PATTERN ALTERATION.

SIGNING

B) PROVIDE SIGNING AND DEVICES REQUIRED TO CLOSE THE ROAD ACCORDING TO THE ROADWAY STANDARD DRAWINGS AND TRAFFIC CONTROL PLANS.

PROVIDE SIGNING REQUIRED FOR THE OFF-SITE DETOUR ROUTE AS SHOWN IN THE TRAFFIC CONTROL PLANS.

C) COVER OR REMOVE ALL SIGNS AND DEVICES REQUIRED TO CLOSE THE ROAD WHEN ROAD CLOSURE IS NOT IN OPERATION.

COVER OR REMOVE ALL SIGNS REQUIRED FOR THE OFF-SITE DETOUR WHEN THE DETOUR IS NOT IN OPERATION.

D) ENSURE ALL NECESSARY SIGNING IS IN PLACE PRIOR TO ALTERING ANY TRAFFIC PATTERN.

E) PLACE TYPE III BARRICADES WITH "ROAD CLOSED" SIGN R11-2 ATTACHED OF SUFFICIENT LENGTH TO CLOSE ENTIRE ROADWAY.

PAVEMENT MARKINGS AND MARKERS

F) TIE PROPOSED PAVEMENT MARKING LINES TO EXISTING PAVEMENT MARKING LINES.

PHASING

PHASE I

STEP 1: - USING ROADWAY STANDARD DRAWING NO. 1101.03, SHEET 1 OF 9 AND SHEET TMP-2 CLOSE FAITH BAPTIST CHURCH ROAD (SR 1126) TO TRAFFIC.

STEP 2: - CONSTRUCT PROPOSED BRIDGE AND PROPOSED ROADWAY, UP TO & INCLUDING THE FINAL LAYER OF SURFACE COURSE (SEE ROADWAY PLANS).

- PLACE THE FINAL MARKINGS (PAINT, TWO COATS) IN THE EXISITNG TRAFFIC PATTERN AND LANE WIDTHS AS SHOWN IN THE ROADWAY PLANS.

STEP 3: - OPEN FAITH BAPTIST CHURCH ROAD (SR 1126) TO THE FINAL TRAFFIC PATTERN AND REMOVE ALL TRAFFIC CONTROL DEVICES FROM THE PROJECT.

SIGN NUMBER: name
TYPE: STATIONARY
QUANTITY: SEE PLANS
SIGN WIDTH: 3'-6"
HEIGHT: 2'-6"
TOTAL AREA: 8.8 Sq.Ft.
BORDER TYPE: INSET
RECESS: 0.38"
WIDTH: 0.63"
RADII: 1.5"
NO. Z BARS:
LENGTH:

BACKG COLOR: Fluorescent Orange
COPY COLOR: Black

SYMBOL	X	Y	WID	HT

MAT'L: 0.080" (2.0 mm) ALUMINUM

USE NOTES: 1,2

1. Legend and border shall be direct applied black non-reflective sheeting.
2. Background shall be NC GRADE B fluorescent orange retroreflective sheeting.

DESIGN BY: SLK
CHECKED BY: JWG
Jun 04, 2018
PROJECT ID: 17BP.4.R.97
DIV: 4

Spacing Factor is 1 unless specified otherwise

LETTER POSITIONS

Letter locations are panel edge to lower left corner

																											Series/Size Text Length
F	a	i	t	h																							D 2000
13.9	17.4	21.2	22.6	25.1																							14.2
B	a	p	t	i	s	t																					D 2000
11.2	15.1	18.9	22.2	24.8	26.3	28.8																					19.7
C	h	u	r	c	h		R	d																			D 2000
4.5	8.9	12.8	16.7	19	22.6	25.6	30.6	34.5																			33

FILENAME: Guidesign5_020816

NORTH CAROLINA D.O.T. SIGN DETAIL

NOTE: TEMPORARY SIGNS TO BE PAID FOR AS "STATIONARY WORK ZONE SIGNS".

DOCUMENT NOT CONSIDERED FINAL UNLESS ALL SIGNATURES COMPLETED

WETHERILL ENGINEERING
1223 Jones Franklin Rd.
Raleigh, N.C. 27606
Liscense No. F-0377
Bus: 919 851 8077
Fax: 919 851 8107
TRANSPORTATION PLANNING/DESIGN - BRIDGE/STRUCTURE DESIGN
CIVIL/SITE DESIGN - GIS/GPS - CONSTRUCTION OBSERVATION

APPROVED: Greg S. Purvis DATE: 11/19/2019

SEAL

NORTH CAROLINA PROFESSIONAL SEAL 22999 ENGINEER GREG S. PURVIS

DIVISION OF HIGHWAYS STATE OF NORTH CAROLINA DEPARTMENT OF TRANSPORTATION WORK ZONE TRAFFIC CONTROL

ROAD STANDARD DRAWINGS, PHASING, GENERAL NOTES AND SPECIAL SIGN DESIGN FOR FAITH BAPTIST CHURCH ROAD (SR 1126)

PROJ. REFERENCE NO.	SHEET NO.
B-6002	TMP-2

DETOUR SIGNING

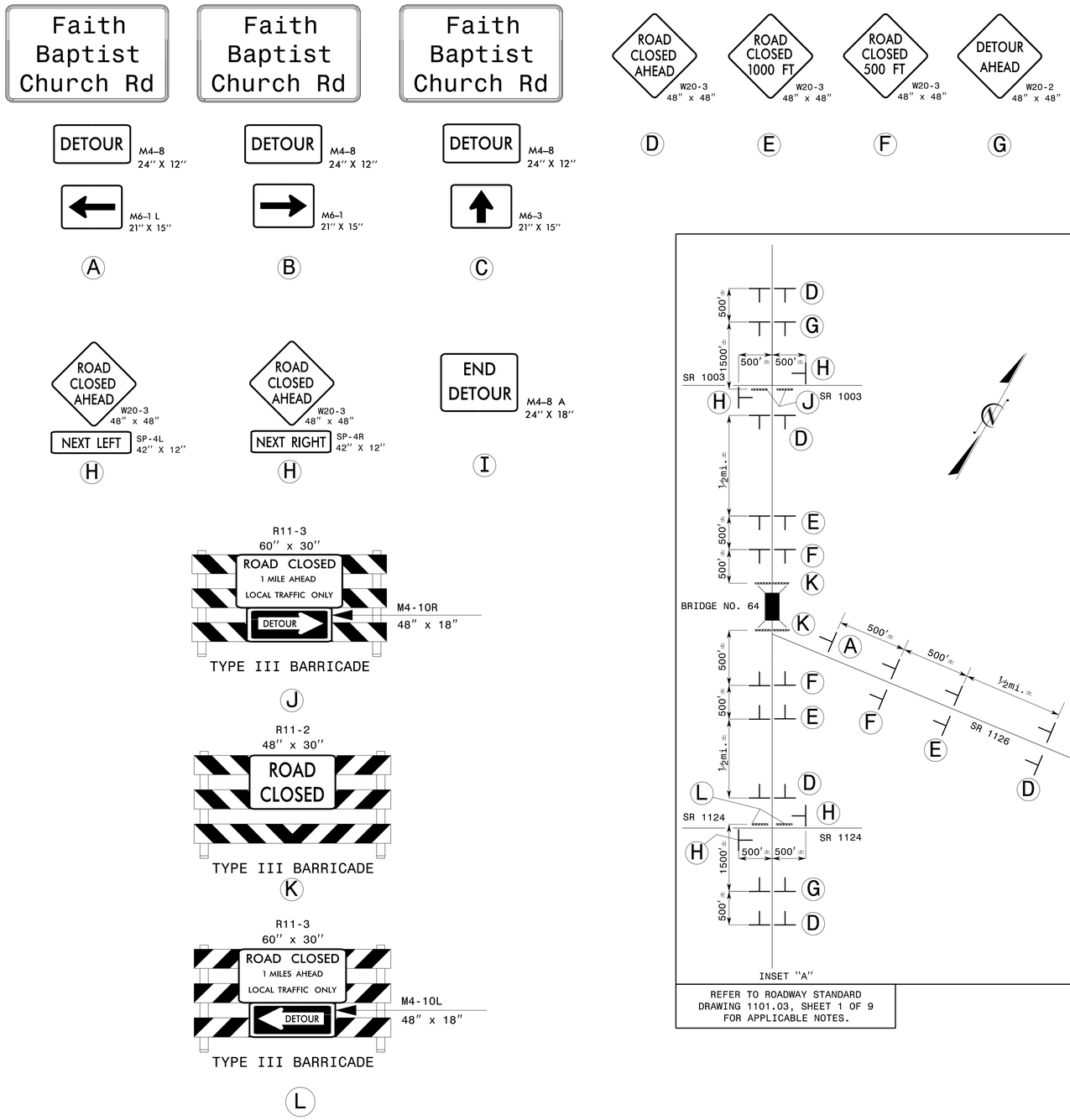

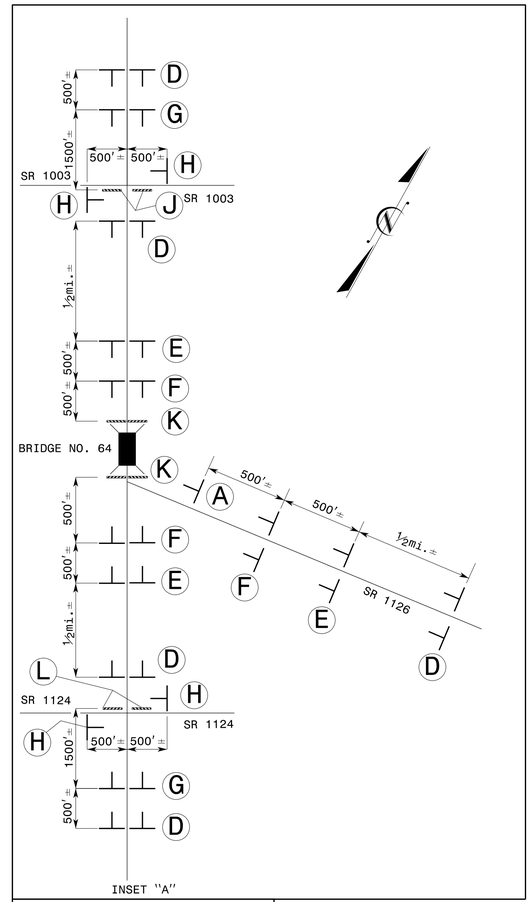

REFER TO ROADWAY STANDARD DRAWING 1101.03, SHEET 1 OF 9 FOR APPLICABLE NOTES.

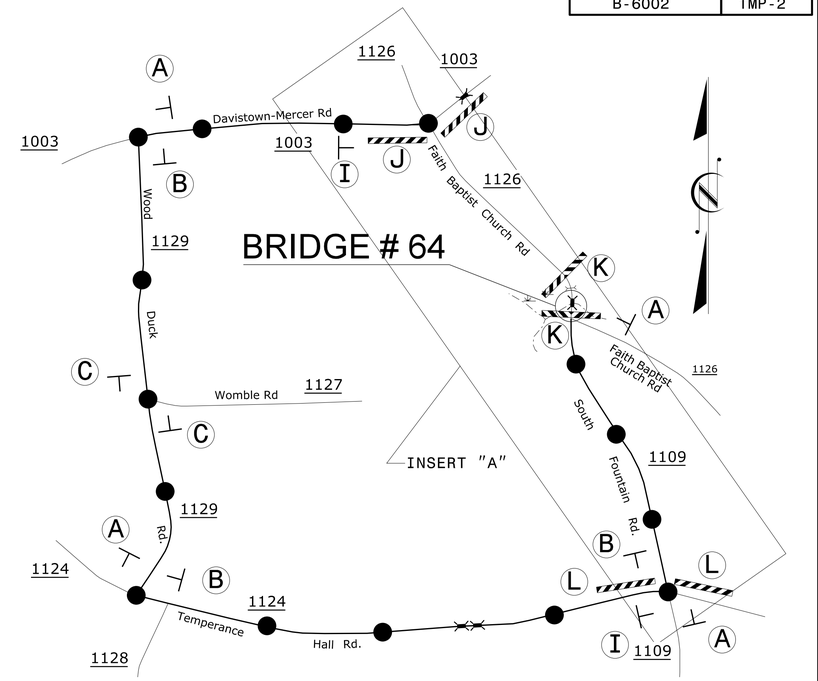

DETOUR ROUTE

NOTES: SEE TMP-1 FOR "FAITH BAPTIST CHURCH ROAD" SPECIAL SIGN DESIGN.
ALL DETOUR SIGN LOCATIONS ARE APPROXIMATE.

WETHERILL ENGINEERING
1223 Jones Franklin Rd.
Raleigh, N.C. 27606
Liscense No. F-0377
Bus: 919 851 8077
Fax: 919 851 8107
TRANSPORTATION PLANNING/DESIGN - BRIDGE/STRUCTURE DESIGN
CIVIL/SITE DESIGN - GIS/GPS - CONSTRUCTION OBSERVATION

APPROVED: Greg S. Purvis DATE: 11/19/2019

SEAL

NORTH CAROLINA PROFESSIONAL SEAL 22999 ENGINEER GREG S. PURVIS

DIVISION OF HIGHWAYS STATE OF NORTH CAROLINA DEPARTMENT OF TRANSPORTATION WORK ZONE TRAFFIC CONTROL

DETOUR
FAITH BAPTIST CHURCH ROAD (SR 1126)

DOCUMENT NOT CONSIDERED FINAL UNLESS ALL SIGNATURES COMPLETED

11/19/2019
P:\2018\18133.01_EDGECOMBE_64\Traffic\TrafficControl\TCP\EDGECOMBE SR 1126_TC_TMP_PSH_02.dgn
User:skennedy

TIP PROJECT: B-6002

See Sheet 1-A For Index of Sheets
See Sheet 1-B For Conventional Symbols
See Sheet 1C-1 TO 1C-2 For Survey Control Sheets

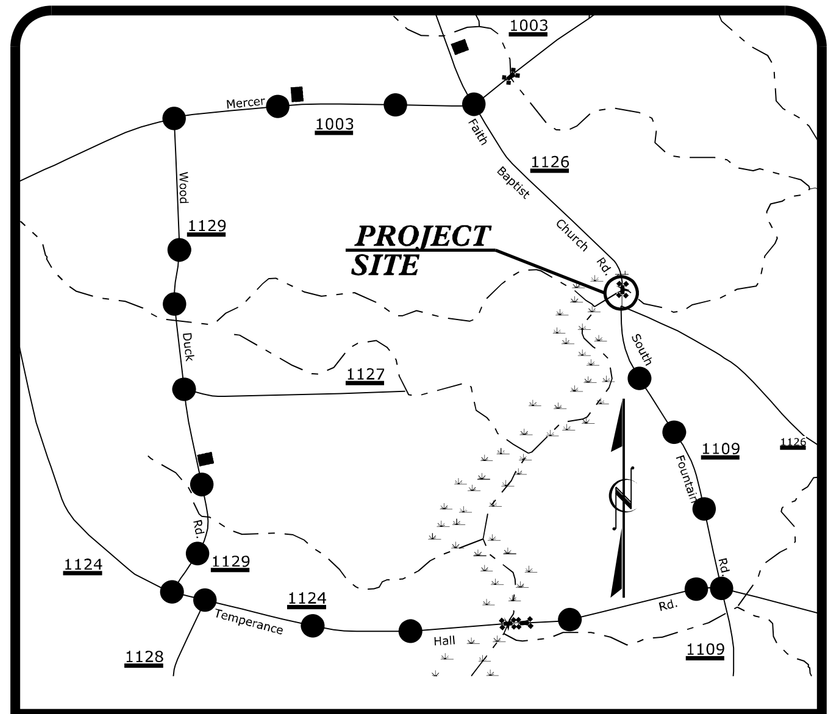

VICINITY MAP

OFF-SITE DETOUR

BRIDGE #320064

STATE OF NORTH CAROLINA
DIVISION OF HIGHWAYS

PLAN FOR PROPOSED
HIGHWAY EROSION CONTROL

EDGECOMBE COUNTY

LOCATION: BRIDGE NO. 64 OVER TOWN CREEK
ON SR 1126 (FAITH BAPTIST CHURCH RD.)
TYPE OF WORK: GRADING, DRAINAGE, PAVING & STRUCTURE

STATE	STATE PROJECT REFERENCE NO.	SHEET NO.	TOTAL SHEETS
N.C.	B-6002	EC-1	

STATE PROJ. NO.	F.A. PROJ. NO.	DESCRIPTION

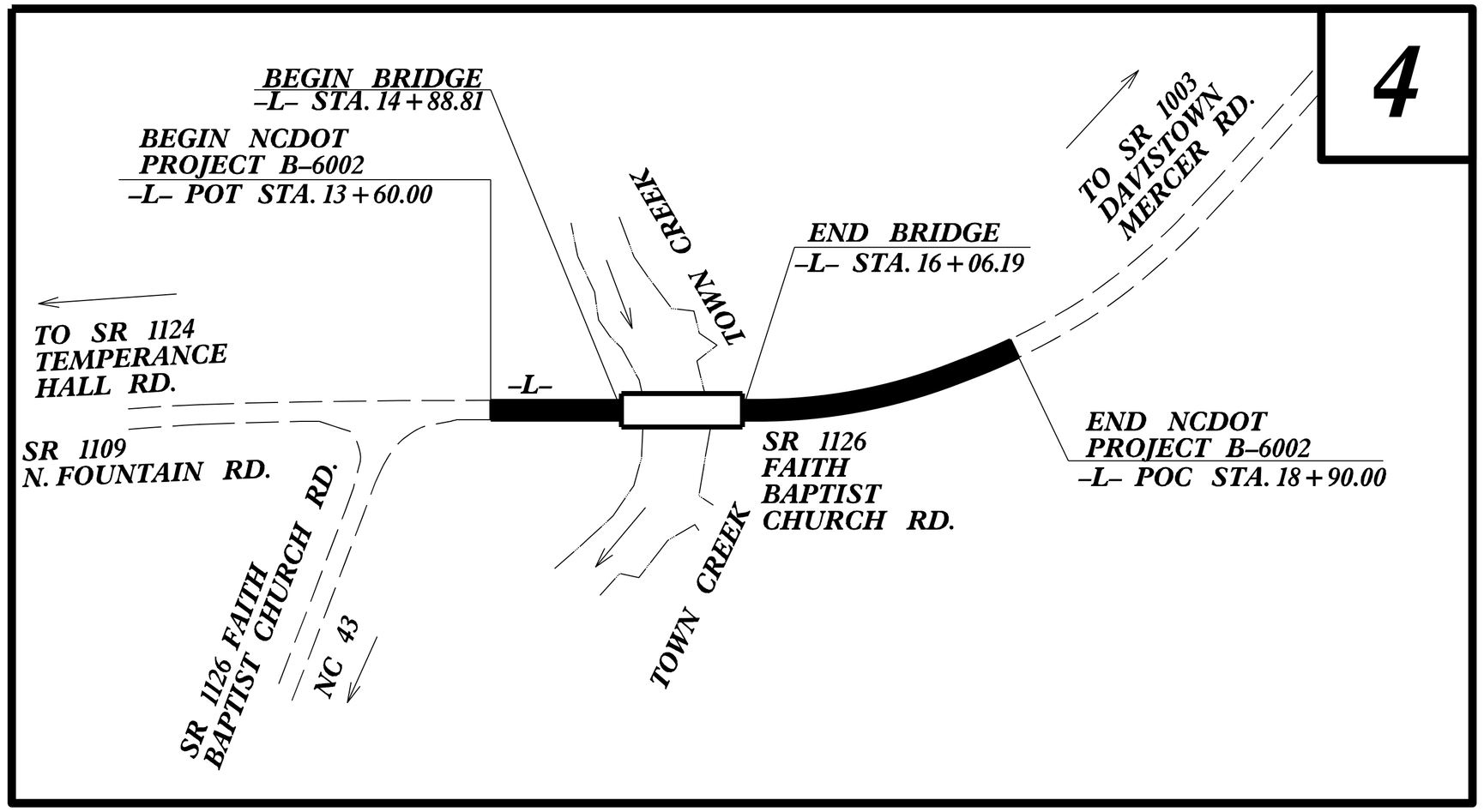

NAD 83/
NA 2011

EROSION AND SEDIMENT CONTROL MEASURES

Std. #	Description	Symbol
1630.03	Temporary Silt Ditch	TSD
1630.05	Temporary Diversion	TD
1605.01	Temporary Silt Fence	
1606.01	Special Sediment Control Fence	
1622.01	Temporary Berms and Slope Drains	
1630.02	Silt Basin Type B	
1633.01	Temporary Rock Silt Check Type-A	
	Temporary Rock Silt Check Type-A with Matting and Polyacrylamide (PAM)	
1633.02	Temporary Rock Silt Check Type-B	
	Wattle / Coir Fiber Wattle	EW CFW
	Wattle / Coir Fiber Wattle with Polyacrylamide (PAM)	
1634.01	Temporary Rock Sediment Dam Type-A	
1634.02	Temporary Rock Sediment Dam Type-B	
1635.01	Rock Pipe Inlet Sediment Trap Type-A	
1635.02	Rock Pipe Inlet Sediment Trap Type-B	
1630.04	Stilling Basin	
1630.06	Special Stilling Basin	
	Rock Inlet Sediment Trap:	
1632.01	Type A	A
1632.02	Type B	B
1632.03	Type C	C
	Skimmer Basin	
	Tiered Skimmer Basin	
	Infiltration Basin	

THIS PROJECT CONTAINS EROSION CONTROL PLANS FOR CLEARING AND GRUBBING PHASE OF CONSTRUCTION.

ENVIRONMENTALLY SENSITIVE AREA(S) EXIST ON THIS PROJECT

Refer To E. C. Special Provisions for Special Considerations.

THIS PROJECT HAS BEEN DESIGNED TO SENSITIVE WATERSHED STANDARDS.

CLEARING ON THIS PROJECT SHALL BE PERFORMED TO THE LIMITS ESTABLISHED BY METHOD II.
THIS PROJECT IS NOT WITHIN ANY MUNICIPAL BOUNDARIES.

GRAPHIC SCALE

0
PLANS

0
PROFILE (HORIZONTAL)

0
PROFILE (VERTICAL)

THESE EROSION AND SEDIMENT CONTROL PLANS COMPLY WITH THE REGULATIONS SET FORTH BY THE NCG-010000 GENERAL CONSTRUCTION PERMIT EFFECTIVE AUGUST 1, 2016 AND ISSUED BY THE NORTH CAROLINA DEPARTMENT OF ENVIRONMENT AND NATURAL RESOURCES DIVISION OF WATER RESOURCES.

Prepared In the Office of:

WETHERILL ENGINEERING
1223 JONES FRANKLIN RD
RALEIGH NC 27606

Designed by:

HARMINDER SINGH — *3519*
NAME — *LEVEL III CERTIFICATION NO.*

Reviewed In the Office of:

ROADSIDE ENVIRONMENTAL UNIT
1 South Wilmington St.
Raleigh, NC 27611

2018 STANDARD SPECIFICATIONS

Reviewed by:

WES CHANDLER, PE

Roadway Standard Drawings

The following roadway english standards as appear in "Roadway Standard Drawings"– Roadway Design Unit – N. C. Department of Transportation – Raleigh, N. C., dated January 2018 and the latest revison thereto are applicable to this project and by reference hereby are considered a part of these plans.

1604.01	Railroad Erosion Control Detail	1632.01	Rock Inlet Sediment Trap Type A
1605.01	Temporary Silt Fence	1632.02	Rock Inlet Sediment Trap Type B
1606.01	Special Sediment Control Fence	1632.03	Rock Inlet Sediment Trap Type C
1607.01	Gravel Construction Entrance	1633.01	Temporary Rock Silt Check Type A
1622.01	Temporary Berms and Slope Drains	1633.02	Temporary Rock Silt Check Type B
1630.01	Riser Basin	1634.01	Temporary Rock Sediment Dam Type A
1630.02	Silt Basin Type B	1634.02	Temporary Rock Sediment Dam Type B
1630.03	Temporary Silt Ditch	1635.01	Rock Pipe Inlet Sediment Trap Type A
1630.04	Stilling Basin	1635.02	Rock Pipe Inlet Sediment Trap Type B
1630.05	Temporary Diversion	1640.01	Coir Fiber Baffle
1630.06	Special Stilling Basin	1645.01	Temporary Stream Crossing
1631.01	Matting Installation		

PROJECT REFERENCE NO.	SHEET NO.
B-6002	EC-2
ROADWAY DESIGN ENGINEER	HYDRAULICS ENGINEER

DIVISION OF HIGHWAYS
STATE OF NORTH CAROLINA

SOIL STABILIZATION TIMEFRAMES

SITE DESCRIPTION	STABILIZATION TIME	TIMEFRAME EXCEPTIONS
PERIMETER DIKES, SWALES, DITCHES AND SLOPES	7 DAYS	NONE
HIGH QUALITY WATER (HQW) ZONES	7 DAYS	NONE
SLOPES STEEPER THAN 3:1	7 DAYS	IF SLOPES ARE 10' OR LESS IN LENGTH AND ARE NOT STEEPER THAN 2:1, 14 DAYS ARE ALLOWED.
SLOPES 3:1 OR FLATTER	14 DAYS	7 DAYS FOR SLOPES GREATER THAN 50' IN LENGTH.
ALL OTHER AREAS WITH SLOPES FLATTER THAN 4:1	14 DAYS	NONE, EXCEPT FOR PERIMETERS AND HQW ZONES.

WETHERILL ENGINEERING
1223 Jones Franklin Rd.
Raleigh, N.C. 27606
License No. F-0377
Bus: 919 851 8077
Fax: 919 851 8107
TRANSPORTATION PLANNING/DESIGN - BRIDGE/STRUCTURE DESIGN
CIVIL/SITE DESIGN - GIS/GPS - CONSTRUCTION OBSERVATION

BRIDGE 320064	PROJECT REFERENCE NO.	SHEET NO.
FINAL PLANS	B-6002	EC-03/CONST.04
	R/W SHEET NO.	
	ROADWAY DESIGN ENGINEER	HYDRAULICS ENGINEER

ENVIRONMENTALLY SENSITIVE AREA
SEE PROJECT SPECIAL PROVISIONS

NOTE:
PLACE TEMPORARY ROCK SEDIMENT DAMS TYPE – B AND TEMPORARY ROCK SILT CHECKS TYPE – A AT DRAINAGE OUTLETS.

CLEARING AND GRUBBING EROSION CONTROL FOR CONSTRUCTION SHEET 04

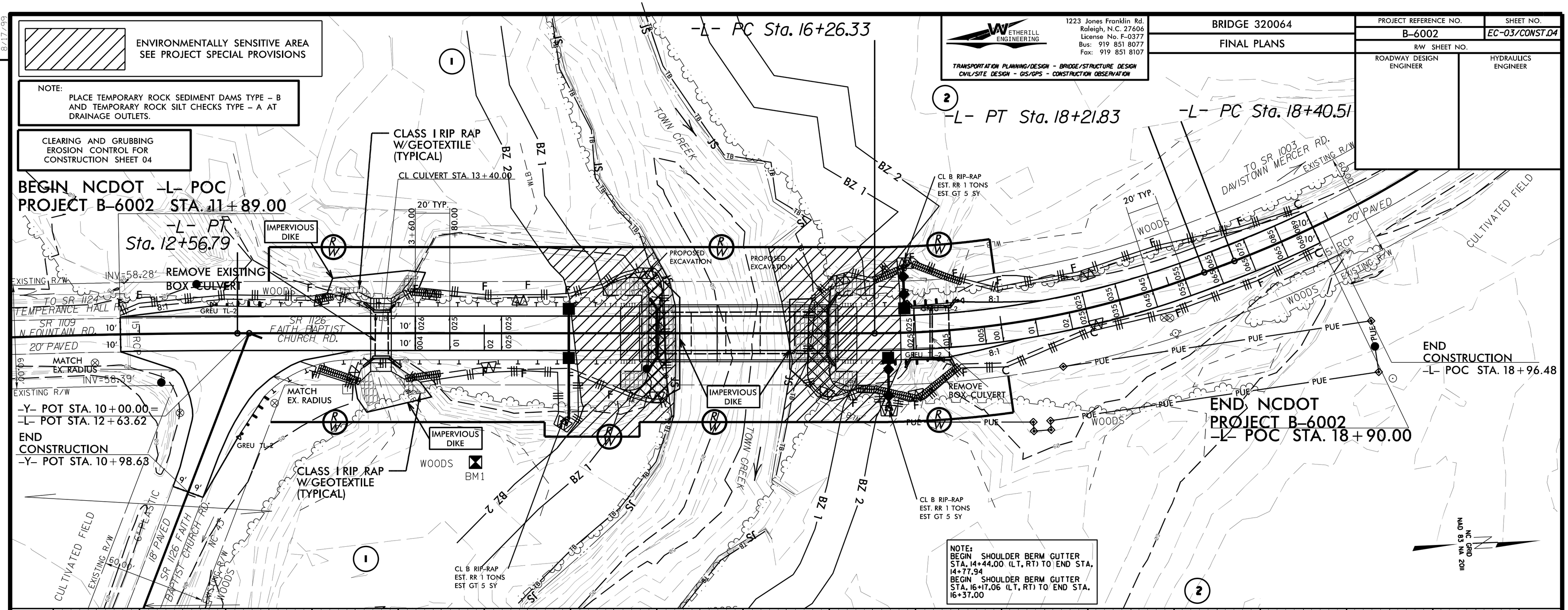

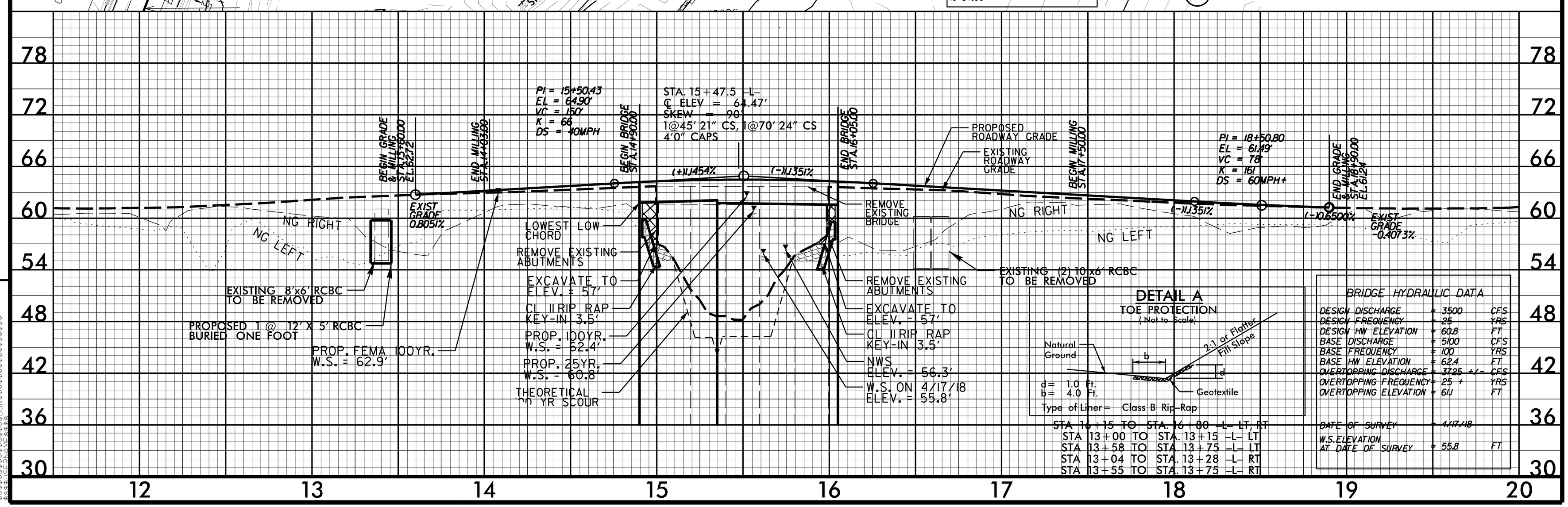

DETAIL A
TOE PROTECTION
(Not to Scale)

d = 1.0 Ft.
b = 4.0 Ft.
Type of Liner = Class B Rip-Rap

STA. 16+15 TO STA. 16+80 -L- LT, RT
STA. 13+00 TO STA. 13+15 -L- LT
STA. 13+58 TO STA. 13+75 -L- LT
STA. 13+04 TO STA. 13+28 -L- RT
STA. 13+55 TO STA. 13+75 -L- RT

BRIDGE HYDRAULIC DATA

DESIGN DISCHARGE	= 3500	CFS
DESIGN FREQUENCY	= 25	YRS
DESIGN HW ELEVATION	= 60.8	FT
BASE DISCHARGE	= 5100	CFS
BASE FREQUENCY	= 100	YRS
BASE HW ELEVATION	= 62.4	FT
OVERTOPPING DISCHARGE	= 3725 +/-	CFS
OVERTOPPING FREQUENCY	= 25 +	YRS
OVERTOPPING ELEVATION	= 61.1	FT
DATE OF SURVEY	= 4/17/18	
W.S. ELEVATION AT DATE OF SURVEY	= 55.8	FT

REVISIONS
8/17/99

BRIDGE 320064

PROJECT REFERENCE NO.	SHEET NO.
B-6002	EC-03A/CONST. 4
R/W SHEET NO.	
ROADWAY DESIGN ENGINEER	HYDRAULICS ENGINEER

CONSTRUCTION PHASING
CULVERT AT STATION 13+40 –L–

1. Utilize Special Stilling Basin(s) as needed throughout culvert construction.

2. Construct Impervious Dikes 1 and 2.

3. Pump effluent from the worksite as needed.

4. Remove existing box culvert. Construct proposed RCBC and associated inlet/outlet channel improvements for proposed RCBC.

5. Remove Impervious Dikes 1 and 2.

6. Remove any remaining special stilling basin(s), and complete roadway.

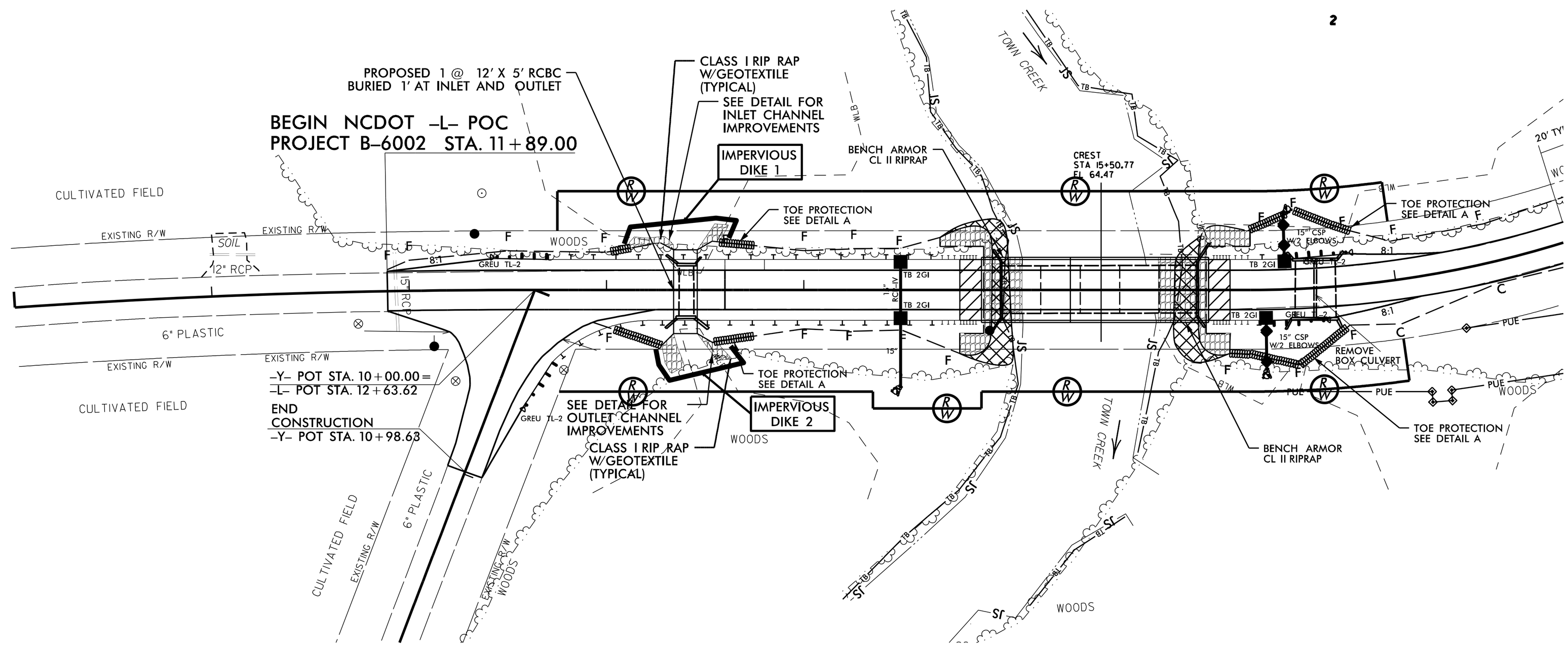

REVISIONS

8/17/99

$$$$$$SYSTIME$$$$$
$$$$$$$$$$$$$$$$DGN$$$$$$$$$$$$$$$$$$$$
$$$$USERNAME$$$$

WETHERILL ENGINEERING
1223 Jones Franklin Rd.
Raleigh, N.C. 27606
License No. F-0377
Bus: 919 851 8077
Fax: 919 851 8107
TRANSPORTATION PLANNING/DESIGN - BRIDGE/STRUCTURE DESIGN
CIVIL/SITE DESIGN - GIS/GPS - CONSTRUCTION OBSERVATION

BRIDGE 320064	PROJECT REFERENCE NO.	SHEET NO.
FINAL PLANS	B-6002	EC-04/CONST.04
	R/W SHEET NO.	
	ROADWAY DESIGN ENGINEER	HYDRAULICS ENGINEER

Place Matting for Erosion Control on Slopes Adjacent to Permitted Wetlands as Work Allows.

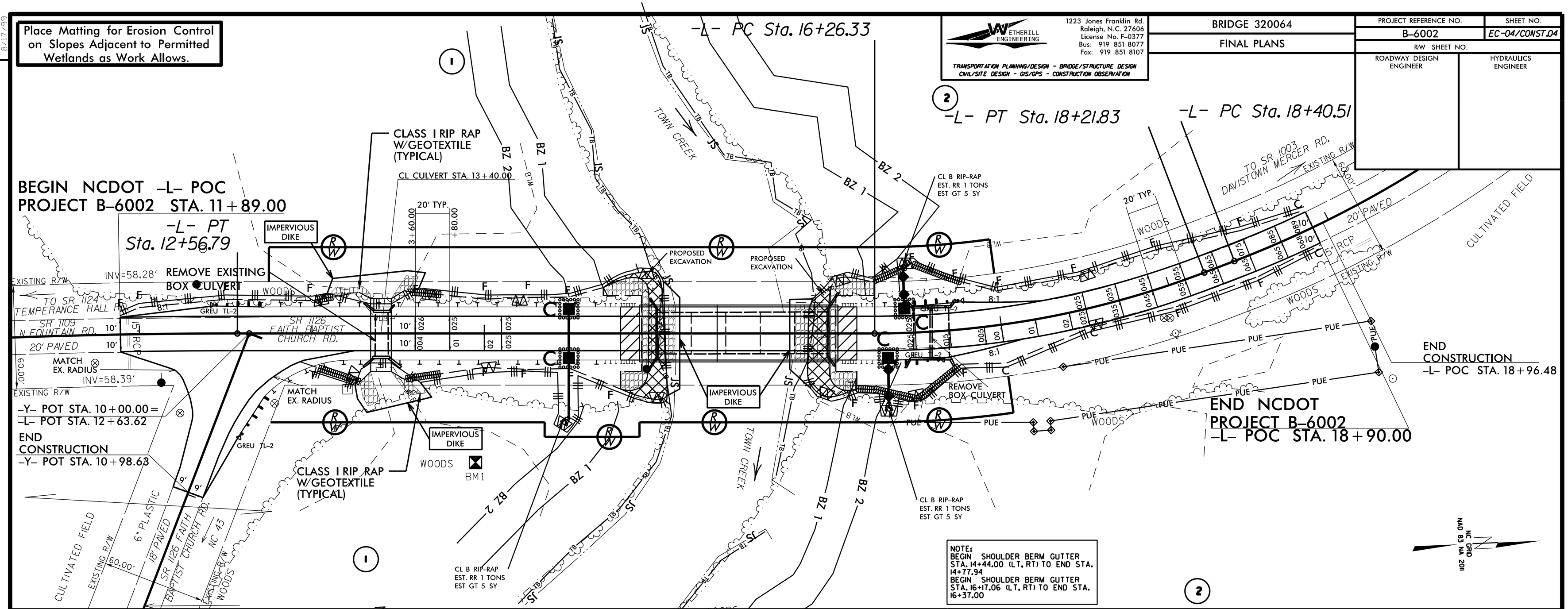

NOTE:
BEGIN SHOULDER BERM GUTTER STA. 14+44.00 (LT, RT) TO END STA. 14+77.34
BEGIN SHOULDER BERM GUTTER STA. 16+17.06 (LT, RT) TO END STA. 16+37.00

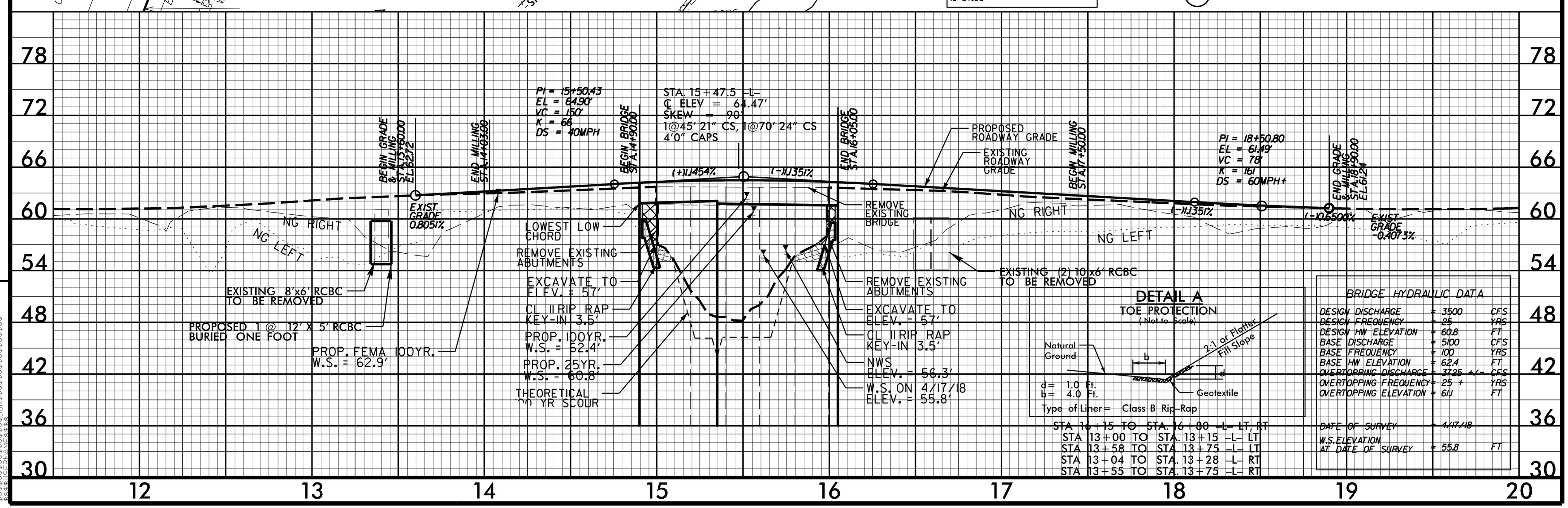

DETAIL A
TOE PROTECTION
(Not to Scale)

d = 1.0 Ft.
b = 4.0 Ft.
Type of Liner = Class B Rip-Rap

STA. 16+15 TO STA. 16+80 -L- LT, RT
STA 13+00 TO STA. 13+15 -L- LT
STA 13+58 TO STA. 13+75 -L- LT
STA 13+04 TO STA. 13+28 -L- RT
STA 13+55 TO STA. 13+75 -L- RT

BRIDGE HYDRAULIC DATA

DESIGN DISCHARGE	= 3500	CFS
DESIGN FREQUENCY	= 25	YRS
DESIGN HW ELEVATION	= 60.8	FT
BASE DISCHARGE	= 5100	CFS
BASE FREQUENCY	= 100	YRS
BASE HW ELEVATION	= 62.4	FT
OVERTOPPING DISCHARGE	= 3725 +/-	CFS
OVERTOPPING FREQUENCY	= 25 +	YRS
OVERTOPPING ELEVATION	= 61.1	FT
DATE OF SURVEY	= 4/17/18	
W.S. ELEVATION AT DATE OF SURVEY	= 55.8	FT

REVISIONS
8/17/99

STATE	STATE PROJECT REFERENCE NO.	SHEET NO.	TOTAL SHEETS
N.C.	B-6002	RF-1	
STATE PROJ. NO.	F. A. PROJ. NO.	DESCRIPTION	

PLANTING DETAILS

SEEDLING / LINER BAREROOT PLANTING DETAIL

HEALING IN

1. Locate a healing-in site in a shady, well protected area.
2. Excavate a flat bottom trench 12 inches deep and provide drainage.

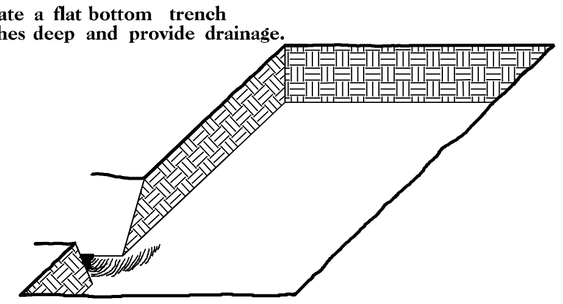

3. Backfill the trench with 2 inches well rotted sawdust. Place a 2 inch layer of well rotted sawdust at a sloping angle at one end of the trench.

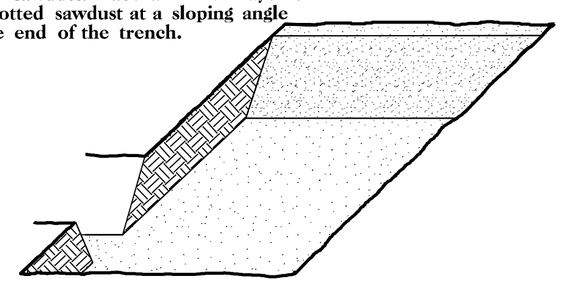

4. Place a single layer of plants against the sloping end so that the root collar is at ground level.

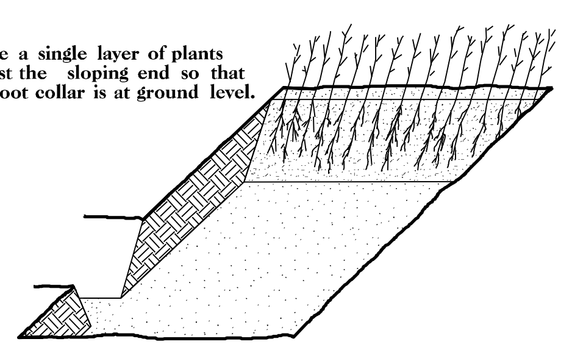

5. Place a 2 inch layer of well rotted sawdust over the roots maintaining a sloping angle.

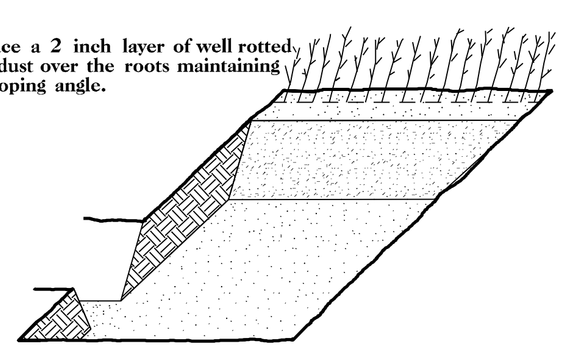

6. Repeat layers of plants and sawdust as necessary and water thoroughly.

DIBBLE PLANTING METHOD
USING THE KBC PLANTING BAR

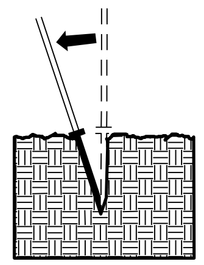

1. Insert planting bar as shown and pull handle toward planter.

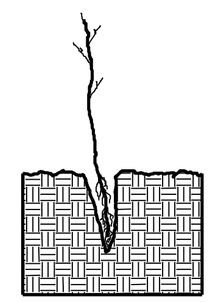

2. Remove planting bar and place seedling at correct depth.

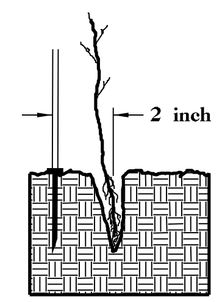

3. Insert planting bar 2 inches toward planter from seedling.

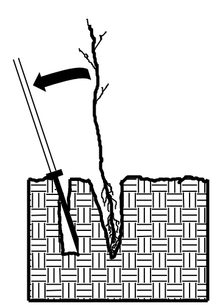

4. Pull handle of bar toward planter, firming soil at bottom.

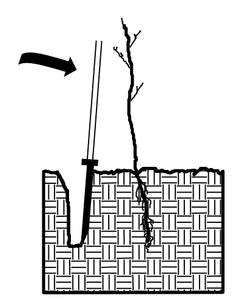

5. Push handle forward firming soil at top.

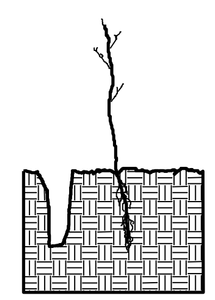

6. Leave compaction hole open. Water thoroughly.

PLANTING NOTES:

PLANTING BAG
During planting, seedlings shall be kept in a moist canvas bag or similar container to prevent the root systems from drying.

KBC PLANTING BAR
Planting bar shall have a blade with a triangular cross section, and shall be 12 inches long, 4 inches wide and 1 inch thick at center.

ROOT PRUNING
All seedlings shall be root pruned, if necessary, so that no roots extend more than 10 inches below the root collar.

REFORESTATION

☐ TREE REFORESTATION SHALL BE PLANTED 6 FT. TO 10 FT. ON CENTER, RANDOM SPACING, AVERAGING 8 FT. ON CENTER, APPROXIMATELY 680 PLANTS PER ACRE.

REFORESTATION

MIXTURE, TYPE, SIZE, AND FURNISH SHALL CONFORM TO THE FOLLOWING:

25%	LIRIODENDRON TULIPIFERA	TULIP POPLAR	12 in – 18 in BR
25%	PLATANUS OCCIDENTALIS	AMERICAN SYCAMORE	12 in – 18 in BR
25%	FRAXINUS PENNSYLVANICA	GREEN ASH	12 in – 18 in BR
25%	BETULA NIGRA	RIVER BIRCH	12 in – 18 in BR

REFORESTATION DETAIL SHEET

N.C.D.O.T. - ROADSIDE ENVIRONMENTAL UNIT

09/08/99

PROJECT: B-6002

CONTRACT: TBD

See Sheet 1-A For Index of Sheets
See Sheet 1-B For Conventional Symbols
See Sheet 1C-1 TO 1C-2 For Survey Control Sheets

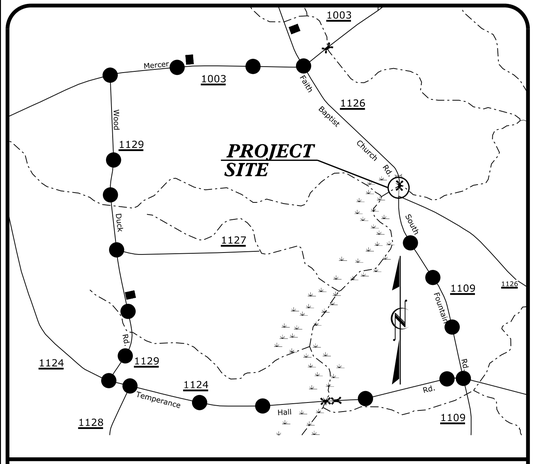

VICINITY MAP

OFF-SITE DETOUR

NAD 83/
NA 2011

STATE OF NORTH CAROLINA
DIVISION OF HIGHWAYS

UTILITY CONSTRUCTION PLANS
EDGECOMBE COUNTY

LOCATION: BRIDGE NO. 64 OVER TOWN CREEK ON SR 1126 (FAITH BAPTIST CHURCH RD.)

TYPE OF WORK: RELOCATION OF WATER LINE

T.I.P. NO.	SHEET NO.
B-6002	UC-1

WETHERILL ENGINEERING
1223 Jones Franklin Rd.
Raleigh, N.C. 27606
License No. F-0377
Bus: 919 851 8077
Fax: 919 851 8107
TRANSPORTATION PLANNING/DESIGN - BRIDGE/STRUCTURE DESIGN
CIVIL/SITE DESIGN - GIS/GPS - CONSTRUCTION OBSERVATION

FINAL DESIGN
RELEASE
FOR CONSTRUCTION

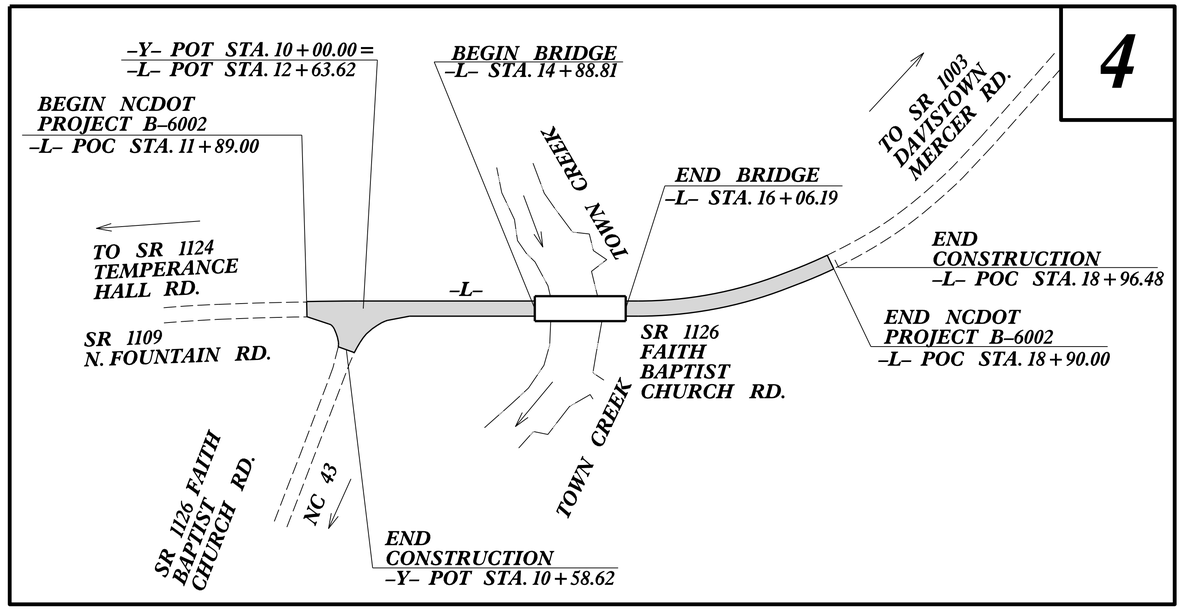

CLEARING ON THIS PROJECT SHALL BE PERFORMED TO THE LIMITS ESTABLISHED BY METHOD III.
THIS PROJECT IS NOT WITHIN ANY MUNICIPAL BOUNDARIES.

DOCUMENT NOT CONSIDERED FINAL UNTIL ALL SIGNATURES ARE COMPLETED

GRAPHIC SCALES

30 15 0 30 60
PLANS

30 15 0 30 60
PROFILE (HORIZONTAL)

6 3 0 6 12
PROFILE (VERTICAL)

INDEX OF SHEETS

WATER AND SEWER OWNERS ON PROJECT

(1) EDGECOMBE COUNTY (WATER)

PREPARED IN THE OFFICE OF:
WETHERILL ENGINEERING
1223 Jones Franklin Rd.
Raleigh, N.C. 27606
License No. F-0377
Bus: 919 851 8077
Fax: 919 851 8107
TRANSPORTATION PLANNING/DESIGN - BRIDGE/STRUCTURE DESIGN
CIVIL/SITE DESIGN - GIS/GPS - CONSTRUCTION OBSERVATION

MICHAEL V. ZACCARDO, PE — UTILITY ENGINEER
SCOTT L. KENNEDY — UTILITY DESIGN ENGINEER
JOHN D. SCHRINER, PLS — PROJECT UTILITY COORDINATOR

SEAL
Michael V. Zaccardo
NORTH CAROLINA PROFESSIONAL SEAL 022321 ENGINEER MICHAEL V. ZACCARDO
1/6/2020
UTILITY CONSTRUCTION PLANS ONLY

STATE OF NORTH CAROLINA DEPARTMENT OF TRANSPORTATION
HIGHWAY DIVISION 4
509 WARD BLVD.
PO BOX 3165
WILSON, 27895

KIM MOORE — DIVISION UTILITIES ENGINEER
FRANK ZDELAR — DIVISION UTILITIES COORDINATOR

1/6/2020
U:\UC\Proj\320064_ut_UC1_tsh.dgn
USER:skennedy

PROJECT REFERENCE NO.	SHEET NO.
B-6002	UC-2

STATE OF NORTH CAROLINA
DIVISION OF HIGHWAYS

UTILITIES PLAN SHEET SYMBOLS

PROPOSED WATER SYMBOLS

- Water Line (Sized as Shown) — 12" WL
- 11¼ Degree Bend
- 22½ Degree Bend
- 45 Degree Bend
- 90 Degree Bend
- Plug
- Tee
- Cross
- Reducer
- Gate Valve — GV
- Butterfly Valve — BV
- Tapping Valve — TGV
- Line Stop — LS
- Line Stop with Bypass — LS/BP
- Blow Off — BO
- Fire Hydrant — PFH
- Relocate Fire Hydrant — RFH
- Remove Fire Hydrant — REM FH
- Water Meter — PWM
- Relocate Water Meter — RWM
- Remove Water Meter — REM WM
- Water Pump Station — PS(W)
- RPZ Backflow Preventer — PRPZ
- DCV Backflow Preventer — PBFP
- Relocate RPZ Backflow Preventer — RRPZ
- Relocate DCV Backflow Preventer — RBFP

PROPOSED SEWER SYMBOLS

- Gravity Sewer Line (Sized as Shown) — 12" SS
- Force Main Sewer Line (Sized as Shown) — 12" FSS
- Manhole (Sized per Note)
- Sewer Pump Station — PS(SS)

PROPOSED MISCELLANOUS UTILITIES SYMBOLS

- Power Pole
- Telephone Pole
- Joint Use Pole
- Telephone Pedestal — TEL PED
- Utility Line by Others (Type as Shown) — PROP O/H POW LINES
- Trenchless Installation — 12" TL INSTALL
- Encasement by Open Cut — 24" ENCAS BY OC
- Encasement — 24" ENCASEMENT
- Thrust Block
- Air Release Valve — AR
- Utility Vault — UV
- Concrete Pier — CP
- Steel Pier — SP
- Plan Note — NOTE
- Pay Item Note — PAY ITEM

EXISTING UTILITIES SYMBOLS

- Power Pole
- Telephone Pole
- Joint Use Pole
- Utility Pole
- Utility Pole with Base
- H-Frame Pole
- Power Transmission Line Tower
- Water Manhole
- Power Manhole
- Telephone Manhole
- Sanitary Sewer Manhole
- Hand Hole for Cable
- Power Transformer
- Telephone Pedestal
- CATV Pedestal
- Gas Valve
- Gas Meter
- Located Miscellaneous Utility Object
- Abandoned According to Utility Records — AATUR
- End of Information — E.O.I.
- *Underground Power Line — P
- *Underground Telephone Cable — T
- *Underground Telephone Conduit — TC
- *Underground Fiber Optics Telephone Cable — T FO
- *Underground TV Cable — TV
- *Underground Fiber Optics TV Cable — TV FO
- *Underground Gas Pipeline — G
- Aboveground Gas Pipeline — A/G Gas
- *Underground Water Line — W
- Aboveground Water Line — A/G Water
- *Underground Gravity Sanitary Sewer Line — SS
- Aboveground Gravity Sanitary Sewer Line — A/G Sanitary Sewer
- *Underground SS Forced Main Line — FSS
- Underground Unknown Utility Line — ?UTL
- SUE Test Hole
- Water Meter
- Water Valve
- Fire Hydrant
- Sanitary Sewer Cleanout

*For Existing Utilities

- Utility Line Drawn from Record (Type as Shown) — W
- Designated Utility Line (Type as Shown) — W

REV: 2/1/2012

UTILITY CONSTRUCTION

PROJECT REFERENCE NO.	SHEET NO.
B-6002	UC-3

DOCUMENT NOT CONSIDERED FINAL UNLESS ALL SIGNATURES COMPLETED

DESIGNED BY: SLK
DRAWN BY: SLK
CHECKED BY: MVZ
APPROVED BY: MVZ
REVISED:

NORTH CAROLINA DEPARTMENT OF TRANSPORTATION
UTILITIES ENGINEERING SEC.
PHONE:(919)707-6690
FAX:(919)250-4151

NORTH CAROLINA PROFESSIONAL SEAL 022321 ENGINEER MICHAEL V. ZACCARDO
1/6/2020

UTILITY CONSTRUCTION PLANS ONLY

WETHERILL ENGINEERING
1223 Jones Franklin Rd.
Raleigh, N.C. 27606
License No. F-0377
Bus: 919 851 8077
Fax: 919 851 8107
TRANSPORTATION PLANNING/DESIGN - BRIDGE/STRUCTURE DESIGN
CIVIL/SITE DESIGN - GIS/GPS - CONSTRUCTION OBSERVATION

UTILITY CONSTRUCTION

FINAL DESIGN
RELEASED
FOR CONSTRUCTION

GENERAL NOTES:

1. THE PROPOSED UTILITY CONSTRUCTION SHALL MEET THE APPLICABLE REQUIREMENTS OF THE NC DEPARTMENT OF TRANSPORTATION'S "STANDARD SPECIFICATIONS FOR ROADS AND STRUCTURES" DATED JANUARY 2018.

2. THE EXISTING UTILITIES BELONG TO EDGECOMBE COUNTY .

3. ALL WATER LINES TO BE INSTALLED WITHIN COMPLIANCE OF THE RULES AND REGULATIONS OF THE NORTH CAROLINA DEPARTMENT OF ENVIRONMENTAL QUALITY, DIVISION OF WATER RESOURCES. ALL SEWER LINES TO BE INSTALLED WITHIN COMPLIANCE OF THE RULES AND REGULATIONS OF THE NORTH CAROLINA DEPARTMENT OF ENVIRONMENT QUALITY, DIVISION OF WATER RESOURCES, WQ PERMITTING, PERCS UNIT. PERFORM ALL WORK IN ACCORDANCE WITH THE APPLICABLE PLUMBING CODES.

4. THE UTILITY OWNER OWNS THE EXISTING UTILITY FACILITIES AND WILL OWN THE NEW UTILITY FACILITIES AFTER ACCEPTANCE BY THE DEPARTMENT. THE DEPARTMENT OWNS THE CONSTRUCTION CONTRACT AND HAS ADMINISTRATIVE AUTHORITY. COMMUNICATIONS AND DECISIONS BETWEEN THE CONTRACTOR AND UTILITY OWNER ARE NOT BINDING UPON THE DEPARTMENT OR THIS CONTRACT UNLESS AUTHORIZED BY THE ENGINEER. AGREEMENTS BETWEEN THE UTILITY OWNER AND CONTRACTOR FOR THE WORK THAT IS NOT PART OF THIS CONTRACT OR IS SECONDARY TO THIS CONTRACT ARE ALLOWED, BUT ARE NOT BINDING UPON THE DEPARTMENT.

5. PROVIDE ACCESS FOR THE DEPARTMENT PERSONNEL AND THE OWNER'S REPRESENTATIVES TO ALL PHASES OF CONSTRUCTION. NOTIFY DEPARTMENT PERSONNEL AND THE UTILITY OWNER TWO WEEKS PRIOR TO COMMENCEMENT OF ANY WORK AND ONE WEEK PRIOR TO SERVICE INTERRUPTION. KEEP UTILITY OWNERS' REPRESENTATIVES INFORMED OF WORK PROGRESS AND PROVIDE OPPORTUNITY FOR INSPECTION OF CONSTRUCTION AND TESTING.

6. THE PLANS DEPICT THE BEST AVAILABLE INFORMATION FOR THE LOCATION, SIZE, AND TYPE OF MATERIAL FOR ALL EXISTING UTILITIES. MAKE INVESTIGATIONS FOR DETERMINING THE EXACT LOCATION, SIZE, AND TYPE MATERIAL OF THE EXISTING FACILITIES AS NECESSARY FOR THE CONSTRUCTION OF THE PROPOSED UTILITIES AND FOR AVOIDING DAMAGE TO EXISTING FACILITIES. REPAIR ANY DAMAGE INCURRED TO EXISTING FACILITIES TO THE ORIGINAL OR BETTER CONDITION AT NO ADDITIONAL COST TO THE DEPARTMENT.

7. MAKE FINAL CONNECTIONS OF THE NEW WORK TO THE EXISTING SYSTEM WHERE INDICATED ON THE PLANS, AS REQUIRED TO FIT THE ACTUAL CONDITIONS, OR AS DIRECTED.

8. MAKE CONNECTIONS BETWEEN EXISTING AND PROPOSED UTILITIES AT TIMES MOST CONVENIENT TO THE PUBLIC, WITHOUT ENDANGERING THE UTILITY SERVICE, AND IN ACCORDANCE WITH THE UTILITY OWNER'S REQUIREMENTS. MAKE CONNECTIONS ON WEEKENDS, AT NIGHT, AND ON HOLIDAYS IF NECESSARY.

9. ALL UTILITY MATERIALS SHALL BE APPROVED PRIOR TO DELIVERY TO THE PROJECT. SEE 1500-7, " SUBMITTALS AND RECORDS" IN SECTION 1500 OF THE STANDARD SPECIFICATIONS.

PROJECT SPECIFIC NOTES:

1. PROPOSED WATER LINE FROM -WL- LINE STATION 12+98 +/- TO 1360 +/- SHALL BE 6" R.J. DIP, INSTALLED BY OPEN CUT METHOD, AND FROM -WL- LINE STATION 13+60 +/- TO 16+95 +/- SHALL BE 8" DR9 (DIPS) HDPE, INSTALLED BY DIRECTIONAL DRILL METHOD, AND FROM -WL- LINE STATION 16+95 +/- TO 17+44 +/- SHALL BE 6" R.J. DIP, INSTALLED BY OPEN CUT METHOD.

2. CONTRACTOR'S ATTENTION IS DIRECTED TO SECTIONS 102, 107, AND 1550 OF THE STANDARD SPECIFICATIONS CONCERNING TRENCHLESS INSTALLATION. IT IS CONTRACTOR'S RESPONSIBILITY TO HAVE BORE DESIGNED AND SEALED BY A LICENSED NORTH CAROLINA PROFESSIONAL ENGINEER. NO DAMAGE IS ALLOWED TO RIVER, WETLANDS, OR BUFFER ZONES.

3. IF HDPE PIPE IS INSTALLED BY DIRECTIONAL DRILL, IT SHALL BE FILLED WITH WATER AND NOT BE CONNECTED TO ANY OTHER PIPE OR FITTINGS FOR ONE WEEK FROM THE TIME OF INSTALLATION.

WATER INSTALLATION NOTES:

1) CONTRACTOR SHALL COORDINATE ALL PROPOSED WORK WITH EDGECOMBE COUNTY UTILITIES COORDINATOR MR. STEVE COBB AT 252-823-3848 48 HOURS PRIOR TO BEGINNING CONSTRUCTION.
2) CONTRACTOR SHALL FULLY INSTALL, PRESSURE & LEAKAGE TEST, AND CHLORINATE NEW WATER MAIN PRIOR TO CONNECTION TO EXISTING SYSTEM.
3) CONTRACTOR SHALL PERFORM THE CONNECTION DURING OFF PEAK HOURS WITH A MAXIMUM SHUT DOWN TIME OF FIVE HOURS. (12 PM MIDNIGHT TO 5 AM)
4) ANY WORK OR TEST PERFORMED WITHOUT NOTIFICATION AND CONTACT WITH EDGECOMBE COUNTY FIELD INSPECTORS SHALL BE PERFORMED AT THE CONTRACTOR'S RISK. TESTING SHALL BE PERFORMED IN THE PRESENCE OF EDGECOMBE COUNTY PERSONNEL. CONTACT MR. STEVE COBB, UTILITIES COORDINATOR.
5) OPERATION OF EXISTING GATE VALVES SHALL BE DONE BY EDGECOMBE COUNTY OPERATIONS STAFF. CONTACT MR. STEVE COBB, EDGECOMBE COUNTY UTILITIES COORDINATOR.
6) TIE NEW WATER MAIN INTO EXISTING. INSTALL THRUST BLOCKS AND RODDING.
7) NEW WATER MAIN SHALL NOT BE CONNECTED TO EXISTING MAIN WITHOUT PRIOR APPROVAL AND COORDINATION WITH EDGECOMBE COUNTY.
8) CONTRACTOR SHALL ALLOW HDPE PIPE 24 HOURS TO RELAX AFTER PULLING IS COMPLETE AND BEFORE IT IS CONNECTED VIA TRANSITION COUPLINGS TO THE OTHER D.I. PIPE.
9) HDPE SIZING - THE INSIDE DIAMETER OF HDPE WATER PIPE SHALL BE EQUAL TO OR GREATER THAN THE INSIDE DIAMETER OF THE WATER PIPE IT IS CONNECTED TO.

CONTRACTOR SHALL EVALUATE THE EXISTING SOILS BENEATH THE STREAM BED AND INSTALL THE DIRECTIONAL DRILL AT A DEPTH OF 10' OR DEEPER (AT HIS DISCRETION) BELOW THE CREEK BOTTOM TO ALLEVIATE THE POSSIBILITY OF DRILLING SLURRY LEAK DURING INSTALLATION. THE CONTRACTOR SHALL SUBMIT A SEALED BORING PLAN PRIOR TO CONSTRUCTION PER THE NCDOT STANDARD SPECIFICATIONS SUB-ARTICLE 1550-3(B).

CONTRACTOR SHALL PROVIDE DRILLING LOG OF DIRECTIONAL DRILL.
SHOW HORIZONTAL AND VERTICAL LOCATION OF THE DRILLING HEAD EVERY 10' IN PLAN DIMENSION.

ALL WATERLINE CONSTRUCTION SHALL BE IN ACCORDANCE WITH THE LATEST NCDOT AND NCDEQ DWR PWS STANDARDS AND SPECIFICATIONS.

8/17/99

REVISIONS

BRIDGE 320064	PROJECT REFERENCE NO.	SHEET NO.
UTILITY CONSTRUCTION PLANS	B-6002	UC-3A

WETHERILL ENGINEERING
1223 Jones Franklin Rd.
Raleigh, N.C. 27606
Liscense No. F-0377
Bus: 919 851 8077
Fax: 919 851 8107
TRANSPORTATION PLANNING/DESIGN - BRIDGE/STRUCTURE DESIGN
CIVIL/SITE DESIGN - GIS/GPS - CONSTRUCTION OBSERVATION

DOCUMENT NOT CONSIDERED FINAL UNLESS ALL SIGNATURES COMPLETED

DESIGNED BY: SLK
DRAWN BY: SLK
CHECKED BY: MVZ
APPROVED BY: MVZ
REVISED:

NORTH CAROLINA DEPARTMENT OF TRANSPORTATION

UTILITIES ENGINEERING SEC.
PHONE:(919)707-6690
FAX:(919)250-4151

DocuSigned by: Michael V. Zaccardo
NORTH CAROLINA PROFESSIONAL SEAL 022321 ENGINEER MICHAEL V. ZACCARDO
1/6/2020

UTILITY CONSTRUCTION PLANS ONLY

UTILITY CONSTRUCTION

FINAL DESIGN
RELEASE
FOR CONSTRUCTION

TRENCH DETAIL

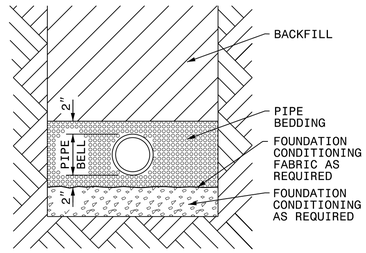

PLACE FOUNDATION CONDITIONING MATERIAL BELOW BEDDING IF REQUIRED, AS DIRECTED BY ENGINEER. PIPE BEDDED IN SELECT MATERIAL, CLASS II (TYPE 1) OR CLASS III. TRENCH BACKFILLED IN LOOSE 6" LAYERS COMPACTED TO TOP OF TRENCH USING LOCAL EXCAVATED MATERIAL IF APPROVED BY THE ENGINEER, OR SELECT MATERIAL. ALL MATERIAL SHALL BE FREE OF ROCKS, FOREIGN MATERIAL, AND FROZEN EARTH. COMPACTION SHALL BE TO APPROXIMATELY 95% DENSITY IN ACCORDANCE WITH AASHTO T-99 AS MODIFIED BY THE DEPARTMENT OF TRANSPORTATION.

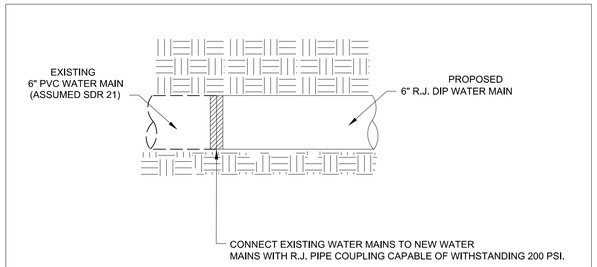

Water Pipe Connection Detail

NTS

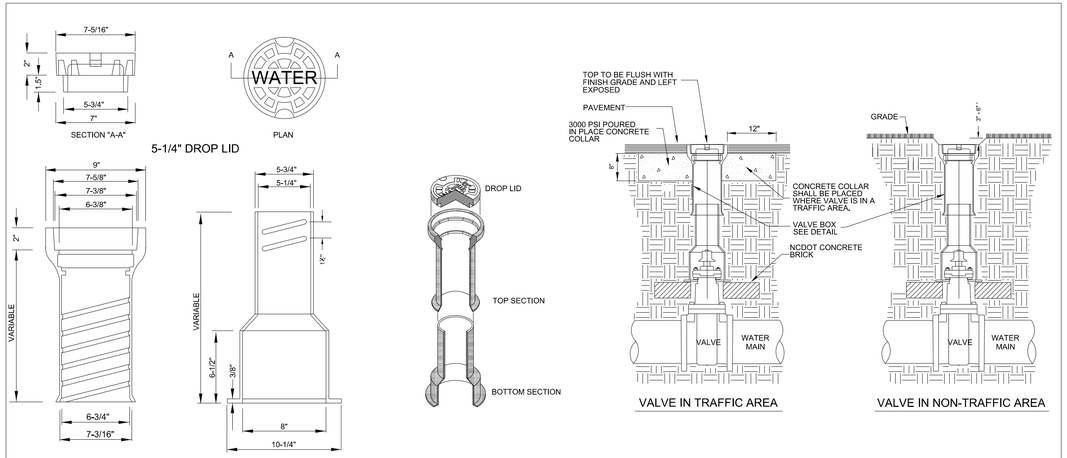

Valve Box Detail

NTS

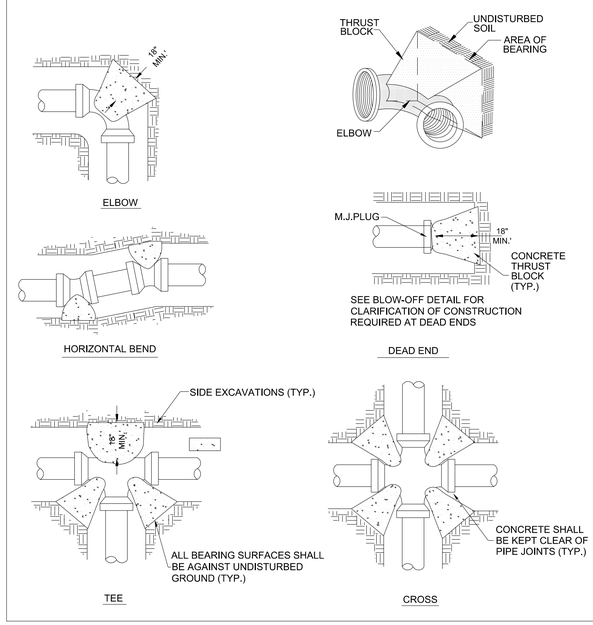

NOTES:

1.) THRUST BLOCKS SHALL BE INSTALLED ON PVC WATER DISTRIBUTION LINES 6" THRU 12" DIA. IN THE MANNER SHOWN.
2.) PIPE GREATER THAN 12 INCH DIAMETER SHALL REQUIRE RESTRAINT JOINT PIPE FOR THE PROPER LENGTH.
3.) SAC-CRETE SHALL NOT BE ALLOWED.
4.) NO CONCRETE SHALL BE PLACED ON BOLTS. WRAP JOINT FITTINGS WITH PLASTIC.
5.) CONCRETE SHALL BE A MINIMUM 3,000 psi.
6.) ALL BEARING SURFACES SHALL BE AGAINST UNDISTURBED SOIL.

CONCRETE THRUST BLOCK DETAIL

NTS

THRUST BLOCKING SCHEDULE

FITTING SIZE (IN.)	MINIMUM BLOCKING AREA AND VOLUME IN S.F. AND (C.Y.)					
	11 1/4°	22 1/2°	45°	90°	TEE	PLUG
2			0.23 (0.11)	0.38 (0.11)	0.30 (0.11)	0.30 (0.11)
4			0.83 (0.18)	1.35 (0.18)	0.98 (0.18)	0.98 (0.18)
6	0.40 (0.01)	0.80 (0.02)	1.73 (0.20)	3.00 (0.33)	2.17 (0.25)	2.17 (0.25)
8	0.80 (0.02)	1.50 (0.04)	3.08 (0.34)	5.40 (0.60)	3.83 (0.42)	3.83 (0.42)
10	1.20 (0.03)	2.30 (0.07)	4.72 (0.52)	8.40 (0.94)	5.92 (0.66)	5.92 (0.66)
12	1.70 (0.05)	3.30 (0.12)	6.82 (0.75)	12.00 (1.33)	8.48 (0.94)	8.48 (0.94)
16	3.00 (0.33)	5.90 (0.65)	11.60 (0.86)	21.30 (1.57)	15.00 (0.97)	15.00 (0.97)
20	4.60 (0.52)	9.20 (0.76)	18.00 (1.32)	33.30 (3.60)	23.30 (1.87)	23.30 (1.87)
24	6.70 (0.75)	13.20 (0.97)	26.00 (2.28)	48.00 (5.29)	33.60 (3.24)	33.60 (3.24)
30	10.40 (0.77)	20.70 (1.80)	40.60 (4.45)	75.00 (10.30)	52.50 (6.32)	52.50 (6.32)
36	15.00 (1.28)	29.80 (3.11)	58.40 (7.67)	108.0 (17.90)	75.60 (10.90)	75.60 (10.90)

NOTE: Values given are based on 200 psi water pressure and 2000 lb/sf soil bearing capacity. Soils with less bearing capacity such as muck, peat or soft clay will require greater blocking areas and volumes.

The thrust blocking shown above is based on the use of mechanical joint as shown on plans.

1/6/2020
B6002_UC3A_ut_rdy_UC3A_psh.dgn
USER: PSKennedy

PROJECT REFERENCE NO.	SHEET NO.
B-6002	UC-3B
DESIGNED BY: SLK	
DRAWN BY: SLK	
CHECKED BY: MVZ	
APPROVED BY: MVZ	
REVISED:	
NORTH CAROLINA DEPARTMENT OF TRANSPORTATION	
UTILITIES ENGINEERING SEC. PHONE:(919)707-6690 FAX:(919)250-4151	UTILITY CONSTRUCTION PLANS ONLY

DocuSigned by: Michael V. Zaccardo
NORTH CAROLINA PROFESSIONAL SEAL 022321 ENGINEER MICHAEL V. ZACCARDO
1/6/2020

UTILITY CONSTRUCTION

DOCUMENT NOT CONSIDERED FINAL UNLESS ALL SIGNATURES COMPLETED

FINAL DESIGN
RELEASE FOR CONSTRUCTION

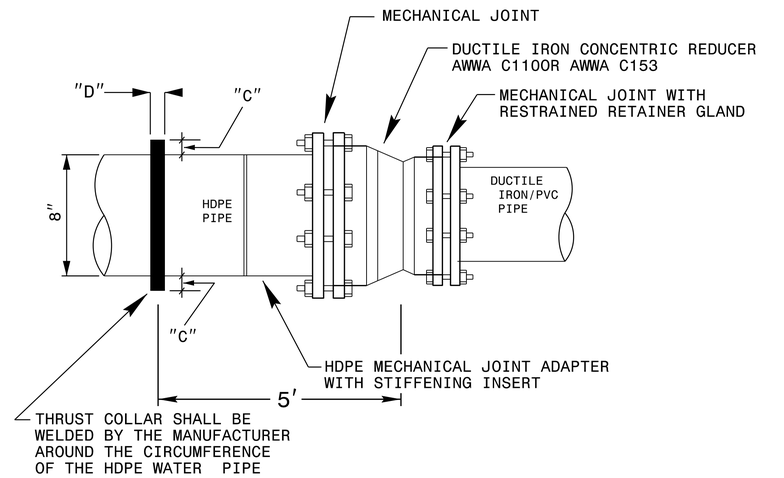

NOTE: SEE SEPARATE DETAIL FOR CONCRETE THRUST COLLAR

TRANSITION DETAIL FROM HDPE TO DI/PVC WATER PIPE

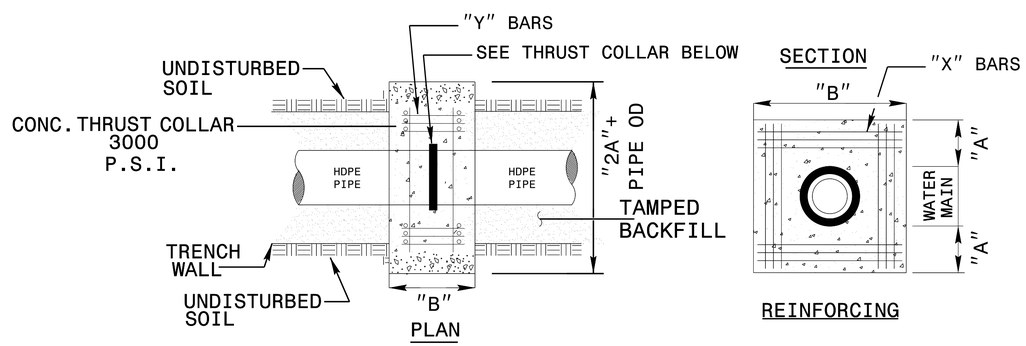

POSSIBLE STEEL REINFORCEMENT TO
BE VERIFIED BY CONTRACTOR'S ENGINEER

8" WATER MAIN= 12-NO. 5 BARS
BARS PLACED AS SHOWN
IN EACH FACE (X BARS) +
6 - NO.5 BARS IN EACH FACE (Y BARS)
TOTAL 24 "X" BARS & 12 "Y" BARS
PER THRUST COLLAR.

DIMENSIONS "A, B, C, D, & X/Y"
SHALL BE DETERMINED BY
CONTRACTOR'S DESIGN ENGINEER.

CONCRETE THRUST COLLAR DETAIL - 8" WATER LINE

NOTE:
CONTRACTOR TO PROVIDE P.E. SEALED DESIGNED SHOP DRAWINGS FOR THRUST COLLARS BASED UPON ACTUAL ON-SITE EXISTING SOILS IN ACCORDANCE WITH THE LATEST NCDOT STANDARDS AND SPECIFICATIONS.

8/17/99

1/6/2020
1:02:04 pm
usr:rkennedy

WETHERILL ENGINEERING
1223 Jones Franklin Rd.
Raleigh, N.C. 27606
License No. F-0377
Bus: 919 851 8077
Fax: 919 851 8107
TRANSPORTATION PLANNING/DESIGN - BRIDGE/STRUCTURE DESIGN
CIVIL/SITE DESIGN - GIS/GPS - CONSTRUCTION OBSERVATION

BRIDGE 320064	
UTILITY CONSTRUCTION PLANS	
DOCUMENT NOT CONSIDERED FINAL UNLESS ALL SIGNATURES COMPLETED	
PROJECT REFERENCE NO.	SHEET NO.
B-6002	UC-4
DESIGNED BY: SLK	
DRAWN BY: SLK	
CHECKED BY: MVZ	
APPROVED BY: MVZ	
REVISED:	
NORTH CAROLINA DEPARTMENT OF TRANSPORTATION	
UTILITIES ENGINEERING SEC. PHONE:(919)707-6690 FAX:(919)250-4151	UTILITY CONSTRUCTION PLANS ONLY

Developed by: Michael V. Zaccardo
NORTH CAROLINA PROFESSIONAL SEAL 022321 ENGINEER MICHAEL V. ZACCARDO
7/9/2020

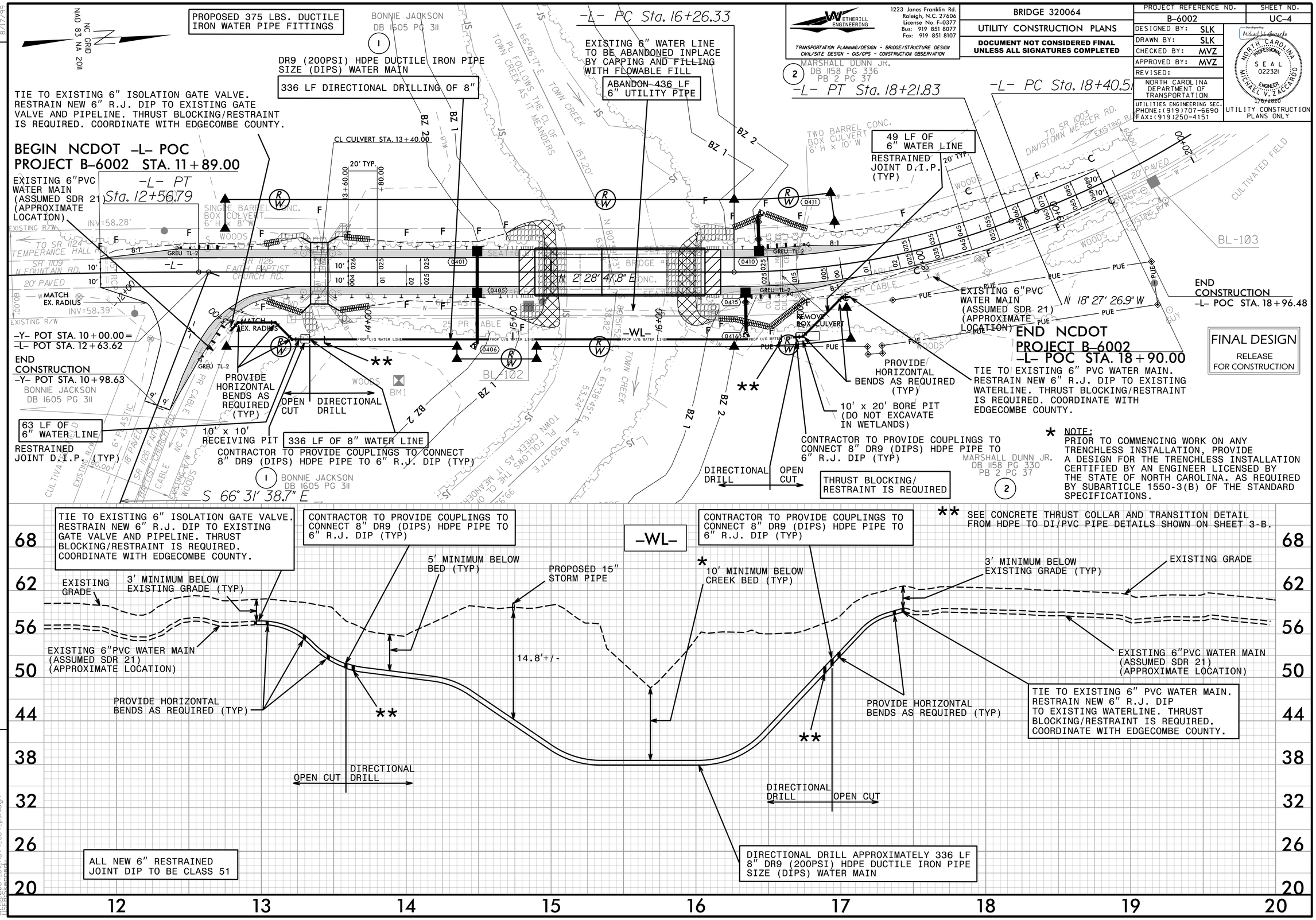

REVISIONS

8/17/99

1/6/2020
B6002_UC4_ut_RDY4_UC4_psh.dgn
USER:Kennedy

09/08/99

TIP PROJECT: B-6002

See Sheet 1-A For Index of Sheets
See Sheet 1-B For Conventional Symbols
See Sheet 1C-1 TO 1C-2 For Survey Control Sheets

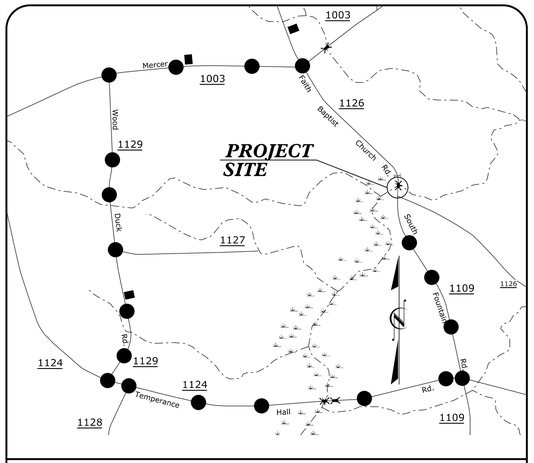

VICINITY MAP

OFF-SITE DETOUR

STATE OF NORTH CAROLINA
DIVISION OF HIGHWAYS

UTILITIES BY OTHERS PLANS
EDGECOMBE COUNTY

T.I.P. NO.	SHEET NO.
B-6002	UO-1

NOTE:
ALL UTILITY WORK SHOWN ON THIS SHEET WILL BE DONE BY OTHERS. NO PAYMENT WILL BE MADE TO THE CONTRACTOR FOR UTILITY WORK SHOWN ON THIS SHEET.

LOCATION: BRIDGE NO. 64 OVER TOWN CREEK ON SR 1126 (FAITH BAPTIST CHURCH RD.)

TYPE OF WORK: UTILITY RELOCATION

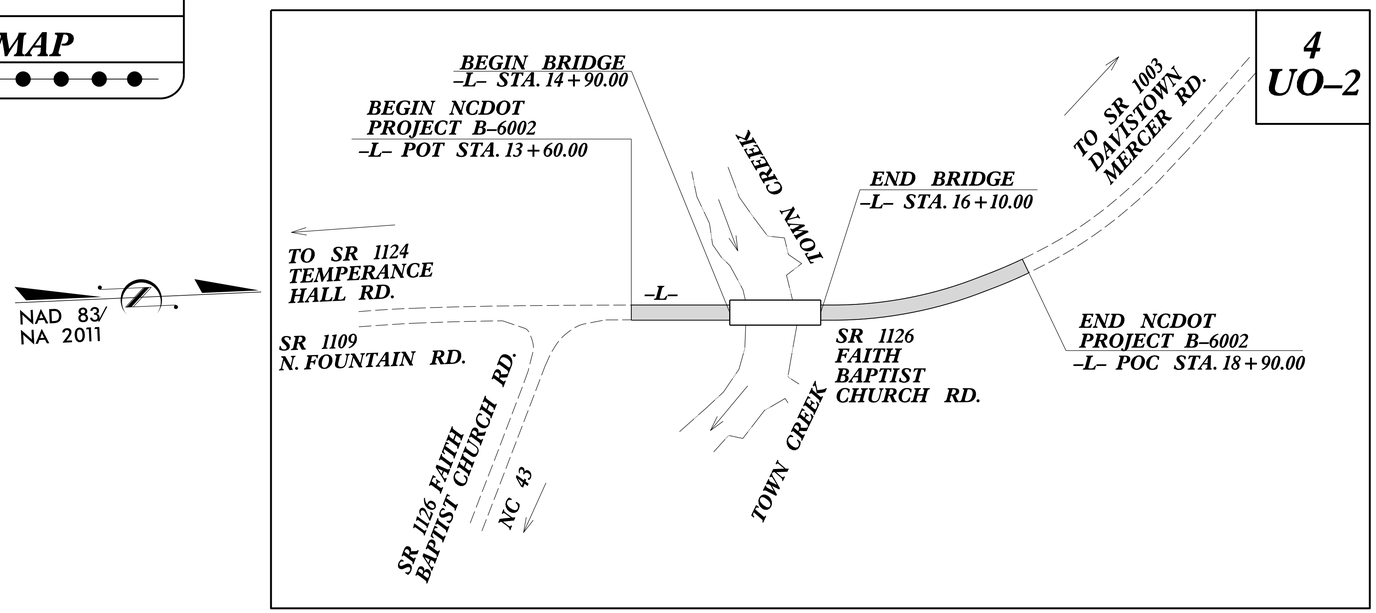

CLEARING ON THIS PROJECT SHALL BE PERFORMED TO THE LIMITS ESTABLISHED BY METHOD II.
THIS PROJECT IS NOT WITHIN ANY MUNICIPAL BOUNDARIES.

GRAPHIC SCALES

50 25 0 50 100
PLANS

50 25 0 50 100
PROFILE (HORIZONTAL)

10 5 0 10 20
PROFILE (VERTICAL)

INDEX OF SHEETS

SHEET NO.:	DESCRIPTION:
UO-1	TITLE SHEET
UO-2	UBO PLAN SHEET

UTILITY OWNERS WITH CONFLICTS

(A) POWER - EDGECOMBE-MARTIN EMC
(B) COMMICATION - CENTURYLINK

PREPARED IN THE OFFICE OF:

WETHERILL ENGINEERING
1223 Jones Franklin Rd.
Raleigh, N.C. 27606
License No. F-0377
Bus: 919 851 8077
Fax: 919 851 8107

TRANSPORTATION PLANNING/DESIGN - BRIDGE/STRUCTURE DESIGN
CIVIL/SITE DESIGN - GIS/GPS - CONSTRUCTION OBSERVATION

John D. Schriner, PLS PROJECT UTILITY COORDINATOR

DIVISION OF HIGHWAYS
DIVISION 4
504 Ward Blvd.
PO Box 3165
Wilson, NC 27895

Kim Moore Division Utility Engineer

$$$$SYSTIME$$$$
$$$$DGN$$$$
$$$$USERNAME$$$$

BRIDGE 320064	PROJECT REFERENCE NO.	SHEET NO.
	B-6002	UO-2
	THIS SHEET CORRESPONDS TO RDY-4	

UTILITIES BY OTHERS

ALL PROPOSED UTILITY WORK SHOWN ON THIS SHEET WILL BE DONE BY OTHERS. NO PAYMENT WILL BE MADE TO THE CONTRACTOR FOR PROPOSED UTILITY WORK SHOWN ON THIS SHEET.

WETHERILL ENGINEERING
1223 Jones Franklin Rd.
Raleigh, N.C. 27606
License No. F-0377
Bus: 919 851 8077
Fax: 919 851 8107
TRANSPORTATION PLANNING/DESIGN - BRIDGE/STRUCTURE DESIGN
CIVIL/SITE DESIGN - GIS/GPS - CONSTRUCTION OBSERVATION

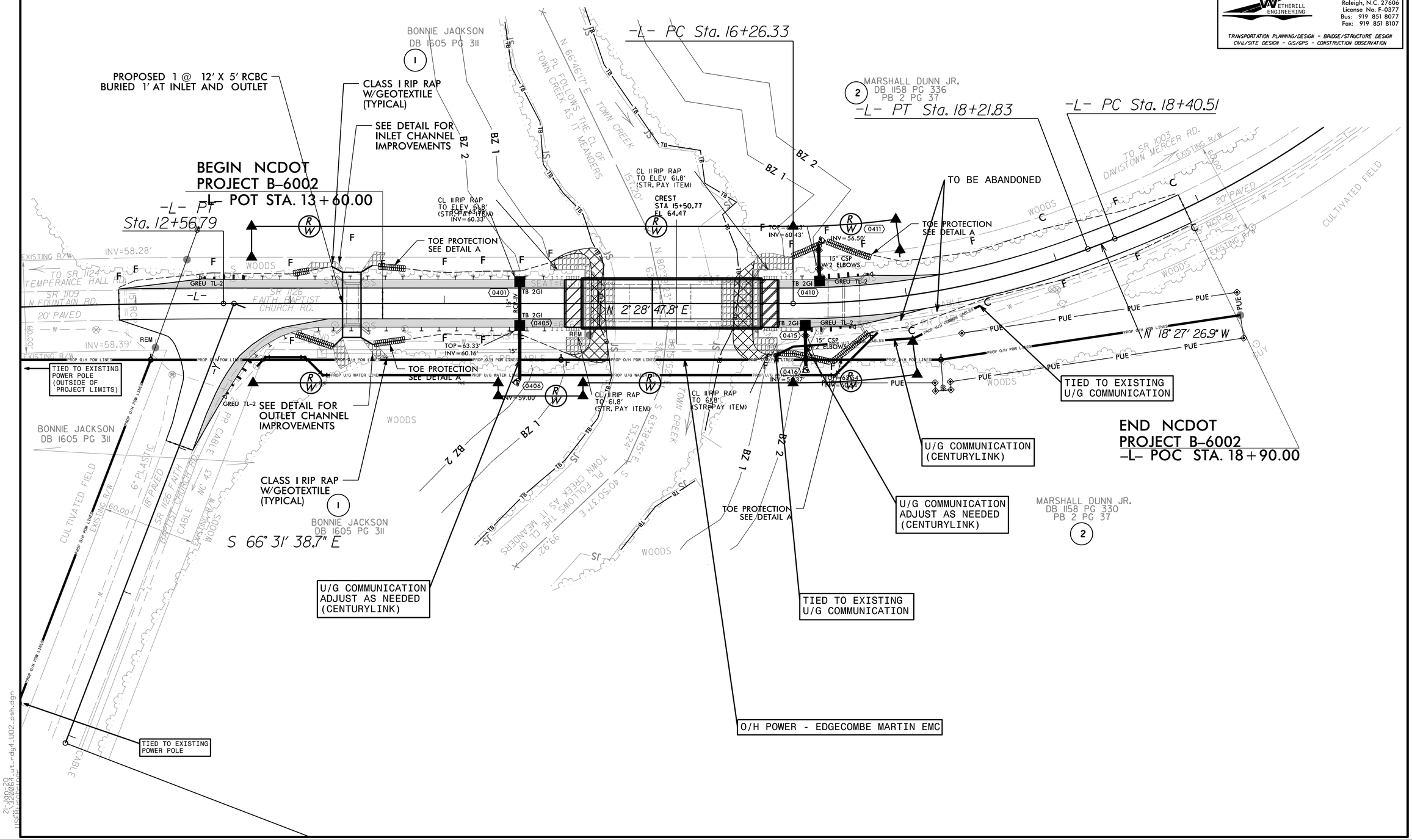

PROJ. REFERENCE NO.	SHEET NO.
B-6002	X-1

STATE OF NORTH CAROLINA
DIVISION OF HIGHWAYS

NOTE: EMBANKMENT COLUMN INCLUDES BACKFILL FOR UNDERCUT

CROSS-SECTION SUMMARY

Station L	Uncl. Exc. (cu. yd.)	Embt (cu. yd.)
11+89.00	0	0
12+00.00	0	0
12+50.00	4	2
13+00.00	9	1
13+40.00	16	119
13+60.00	7	76
14+00.00	5	35
14+25.00	3	2
14+50.00	3	3
14+75.00	3	6
14+88.79	1	7

Station L	Uncl. Exc. (cu. yd.)	Embt (cu. yd.)
16+06.21	0	0
16+25.00	1	32
16+50.00	5	88
16+75.00	8	93
17+00.00	8	20
17+50.00	11	18
18+00.00	6	13
18+50.00	2	6
18+90.00	1	1

Approximate quantities only. Unclassified excavation, borrow excavation, fine grading, clearing and grubbing and removal of existing pavement will be paid for at the lump sum price for "Grading".

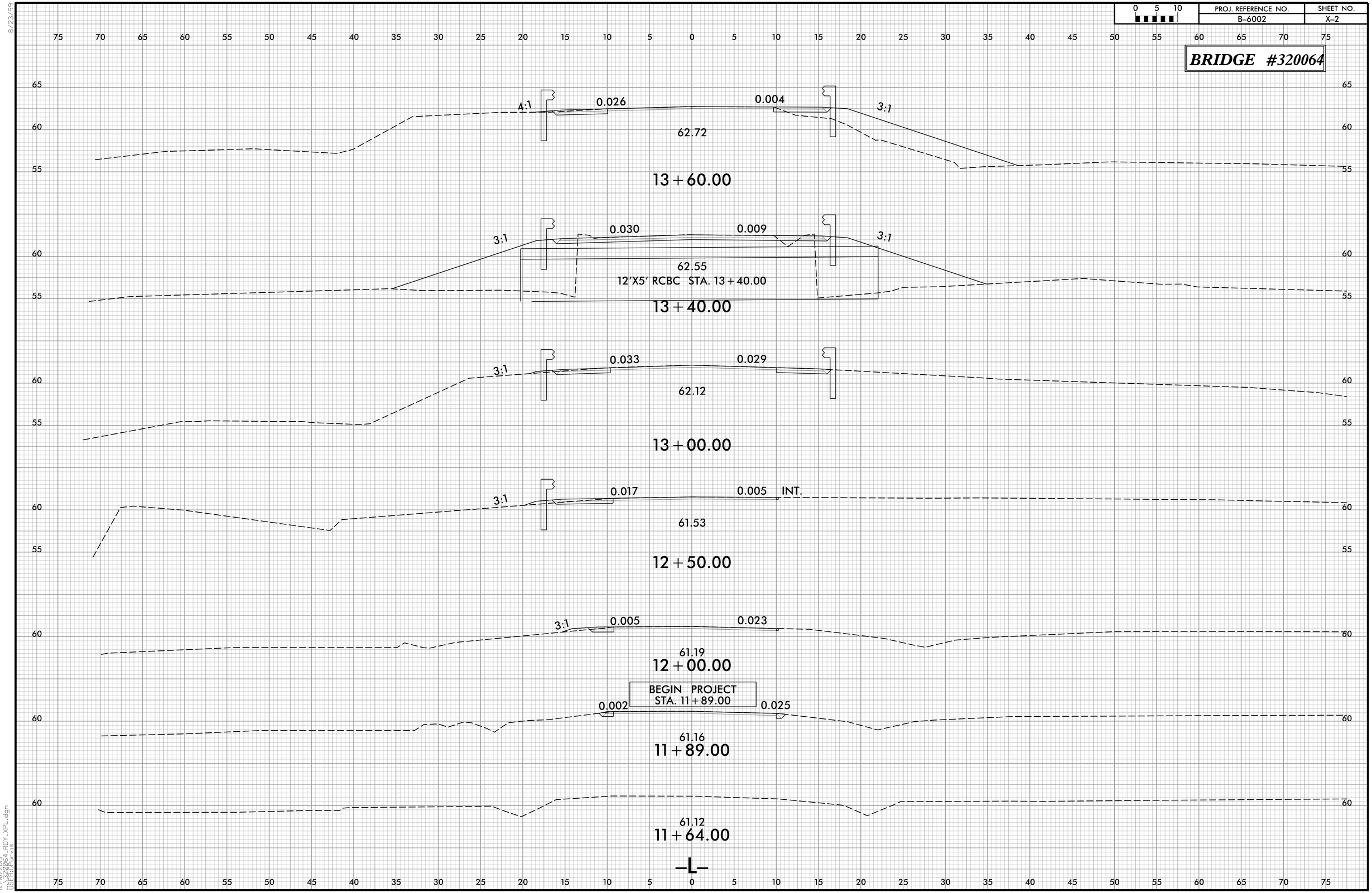

PROJ. REFERENCE NO.	SHEET NO.
B-6002	X-3

0 5 10

BRIDGE #320064

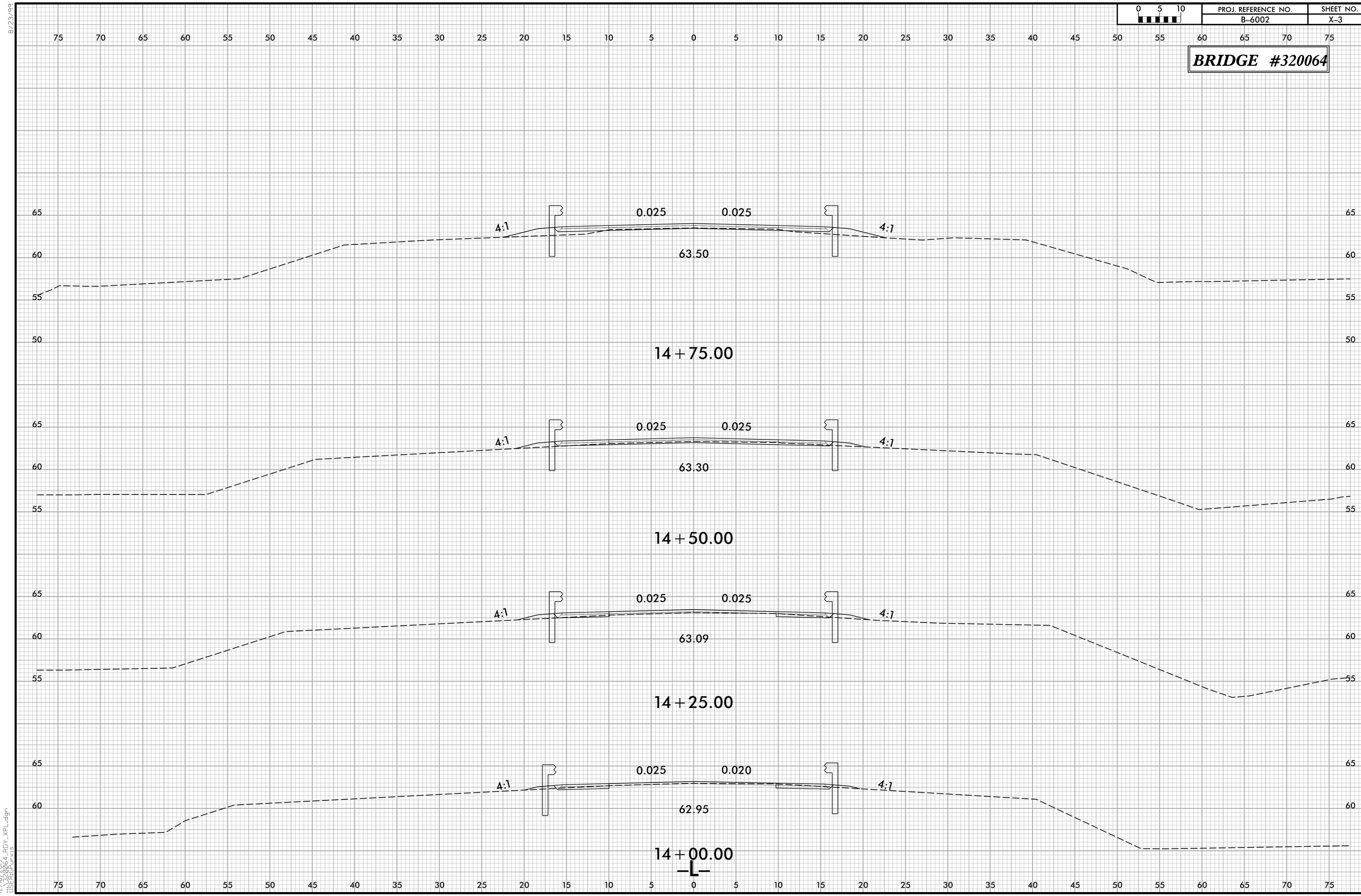

0 5 10	PROJ. REFERENCE NO.	SHEET NO.
	B-6002	X-4

BRIDGE #320064

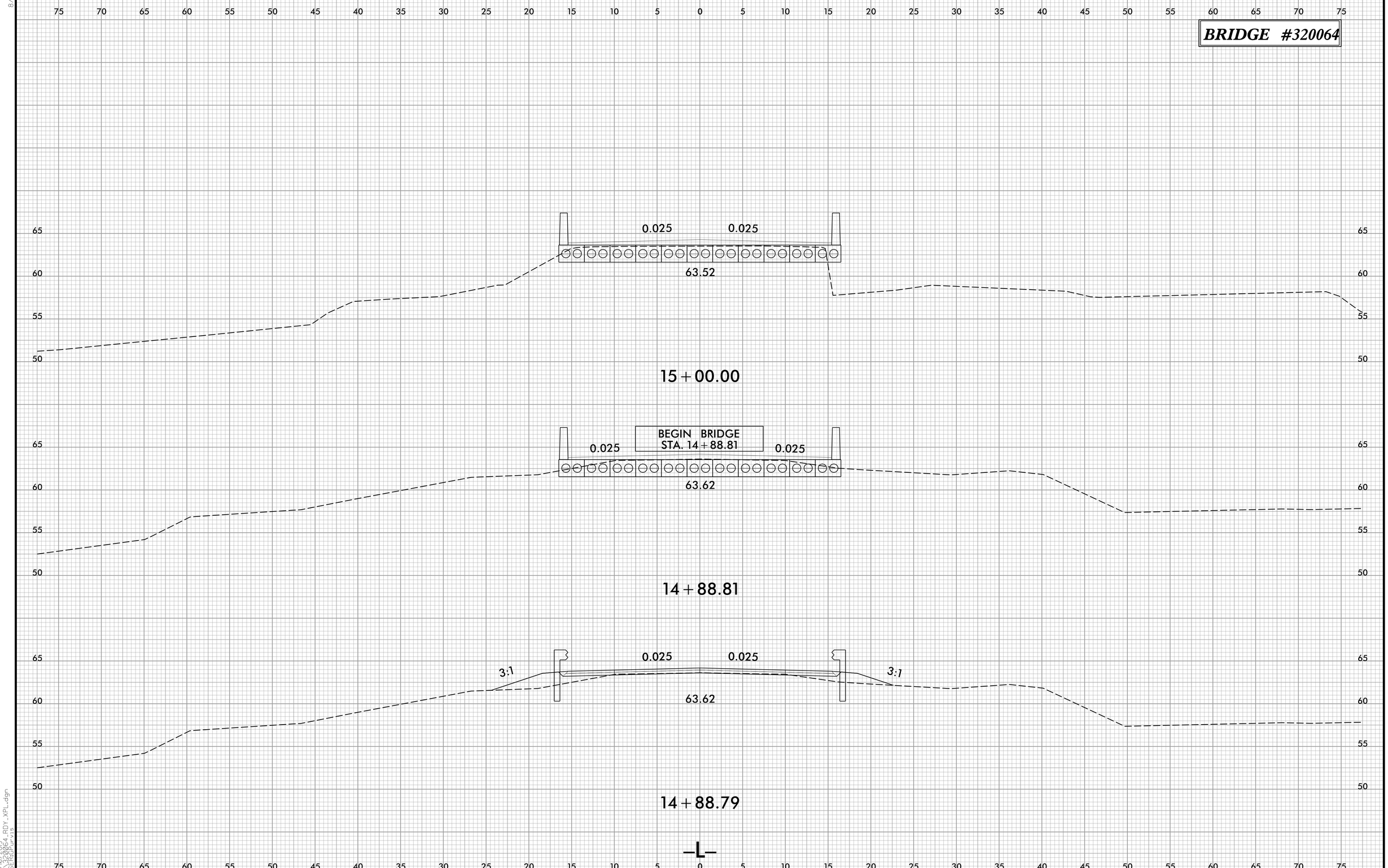

0 5 10	PROJ. REFERENCE NO.	SHEET NO.
	B-6002	X-5

BRIDGE #320064

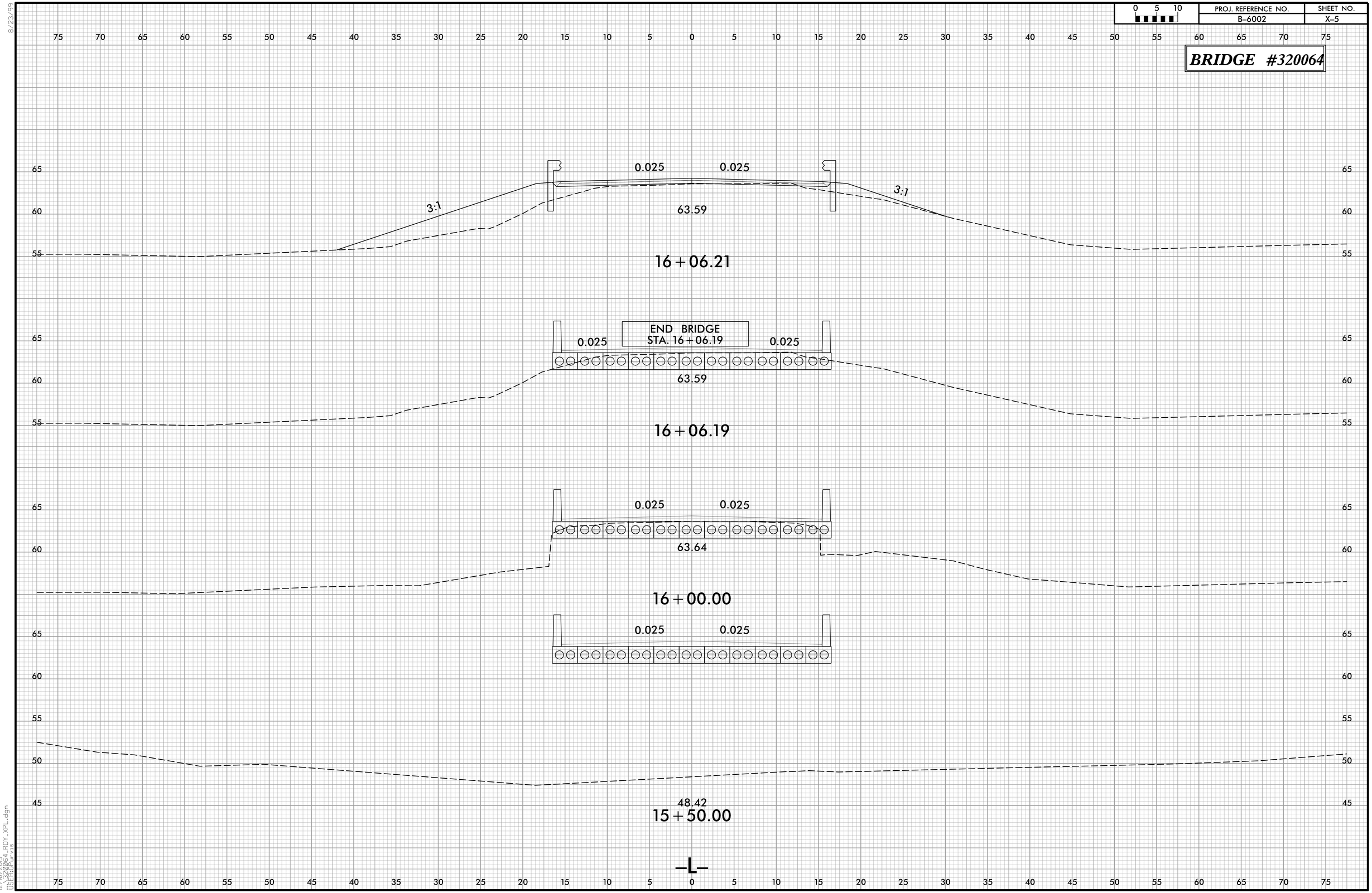

0 5 10	PROJ. REFERENCE NO.	SHEET NO.
	B-6002	X-6

BRIDGE #320064

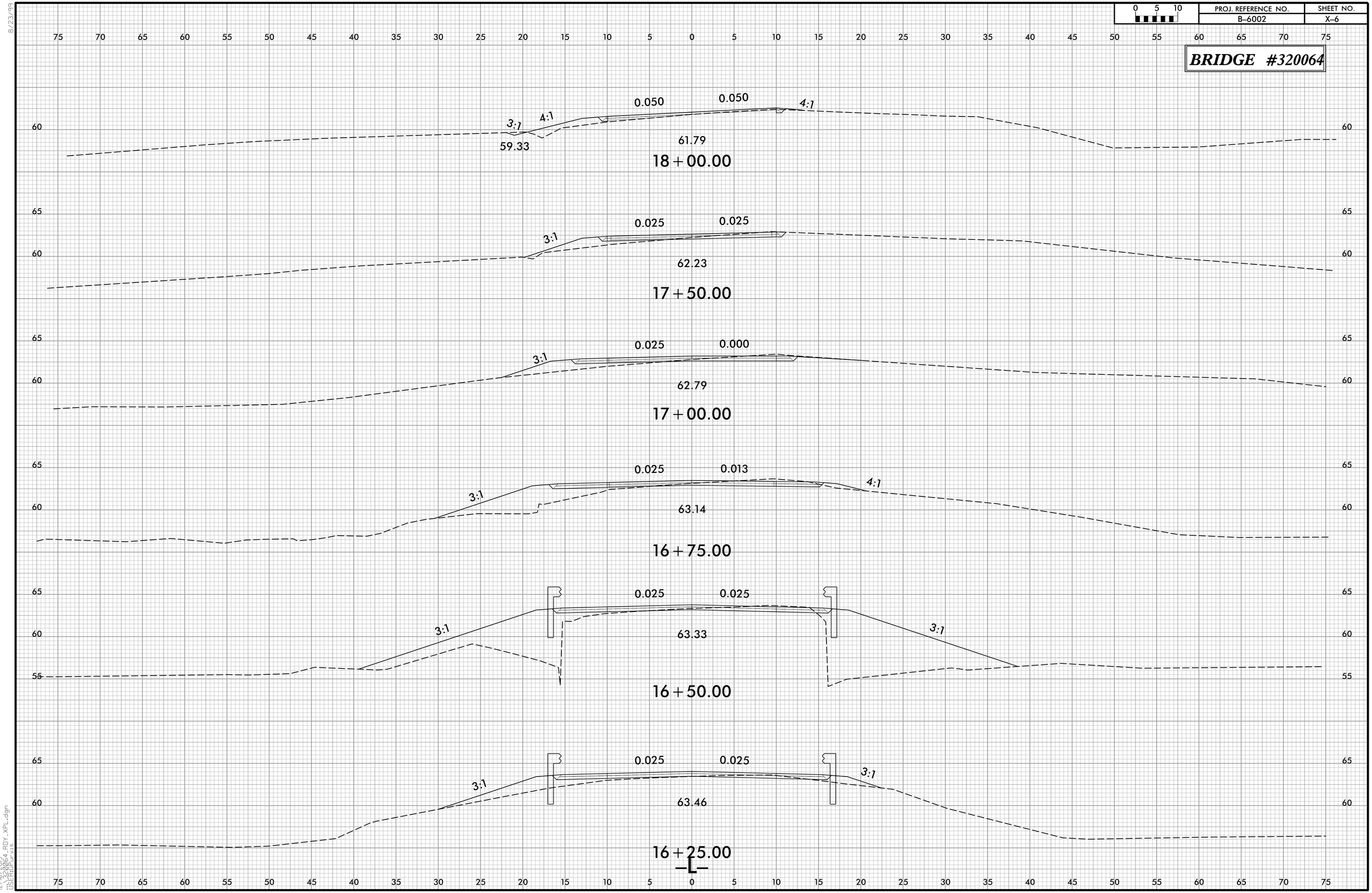

0 5 10	PROJ. REFERENCE NO.	SHEET NO.
	B-6002	X-7

BRIDGE #320064

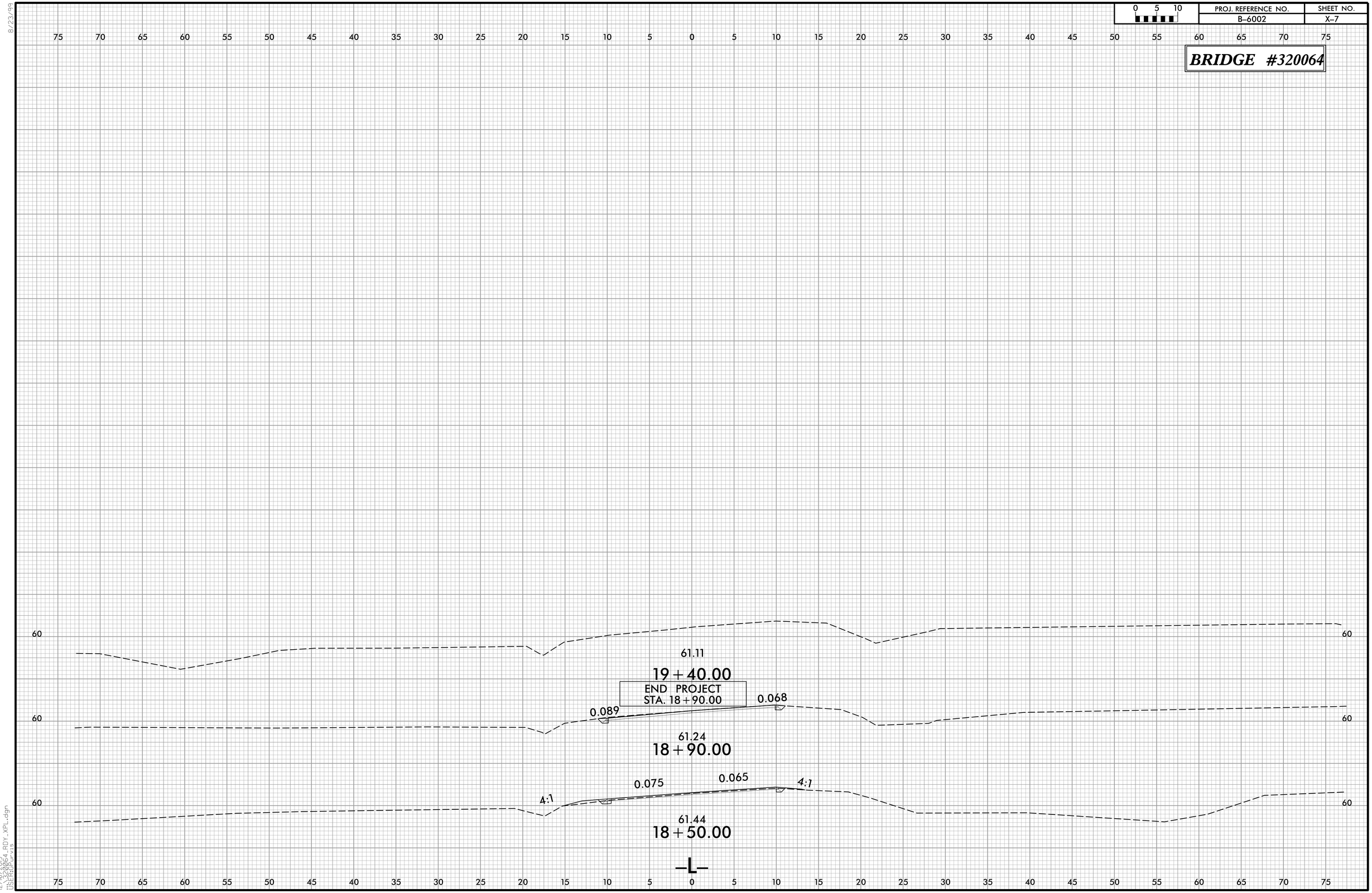

STATE	STATE PROJECT REFERENCE NO.	SHEET NO.	TOTAL SHEETS
N.C.	B-6002		

STATE PROJ. NO.	F.A. PROJ. NO.	DESCRIPTION
48197.1.2		PE
48197.2.1	BRZ-1126(008)	R/W & UTIL
48197.3.1		CONST.

WETHERILL ENGINEERING
1223 Jones Franklin Rd.
Raleigh, N.C. 27606
License No. F-0377
Bus: 919 851 8077
Fax: 919 851 8107
TRANSPORTATION PLANNING/DESIGN - BRIDGE/STRUCTURE DESIGN
CIVIL/SITE DESIGN - GIS/GPS - CONSTRUCTION OBSERVATION

BRIDGE #320064

STATE OF NORTH CAROLINA
DIVISION OF HIGHWAYS

EDGECOMBE COUNTY

LOCATION: BRIDGE NO. 64 OVER TOWN CREEK ON SR 1126 (FAITH BAPTIST CHURCH RD.)

TYPE OF WORK: GRADING, DRAINAGE, PAVING & STRUCTURE

STRUCTURE PLANS

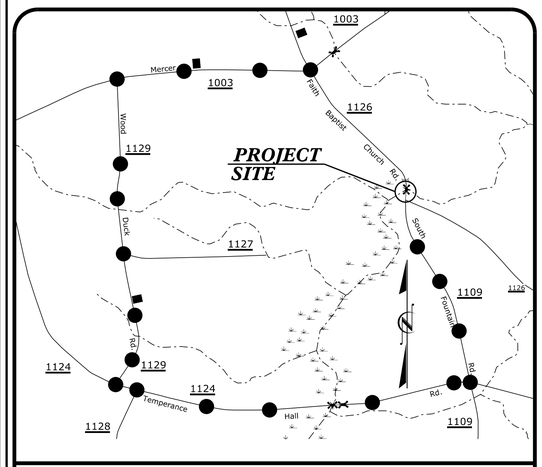

VICINITY MAP

OFF-SITE DETOUR

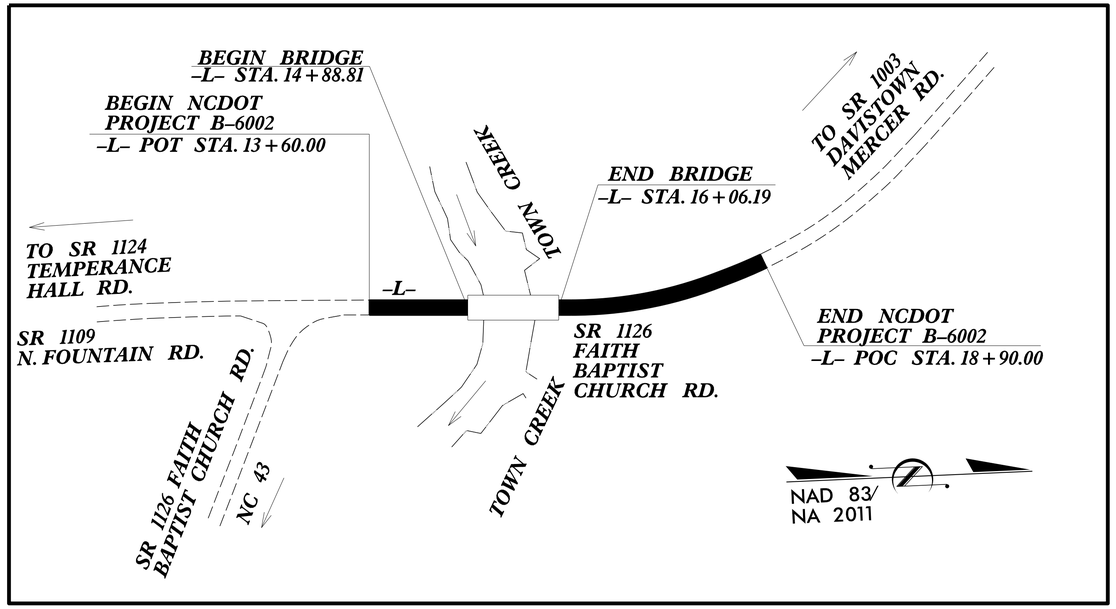

DOCUMENT NOT CONSIDERED FINAL UNLESS ALL SIGNATURES COMPLETED

DESIGN DATA

ADT 2018 = 470

T = 6 % *
V = 35 MPH

* (TTST = 3% + DUAL = 3%)

FUNC CLASS = LOCAL
SUBREGIONAL TIER

PROJECT LENGTH

LENGTH ROADWAY PROJECT B-6002 =	0.111 MILES
LENGTH STRUCTURE PROJECT B-6002 =	0.022 MILES
TOTAL LENGTH PROJECT B-6002 =	0.133 MILES

NCDOT CONTACT: RACHEL C. EVANS, PE
DIVISION 4 PROJECT ENGINEER

Prepared for:
DIVISION OF HIGHWAYS
DIVISION FOUR
509 Ward Boulevard, Wilson NC, 27895

2018 STANDARD SPECIFICATIONS

LETTING DATE:
MAY 25, 2021

EDWARD G. WETHERILL, PE
PROJECT ENGINEER

JOHN A. DILWORTH, PE
PROJECT DESIGN ENGINEER

STATE OF NORTH CAROLINA DEPARTMENT OF TRANSPORTATION

PROJECT: B-6002

CONTRACT: DD00328

09/08/99

11/24/2020
9:03:42 AM
P:\2018\18133.01_EDGECOMBE_64\Structures\DGN\EDGEDECOMBE_64_SMU_TSH.dgn

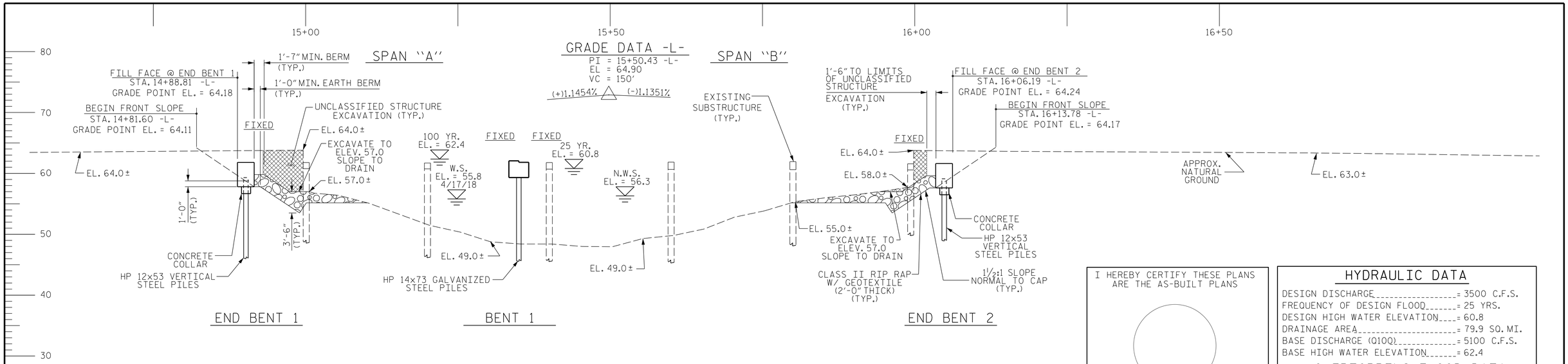

SECTION ALONG -L-

I HEREBY CERTIFY THESE PLANS ARE THE AS-BUILT PLANS

HYDRAULIC DATA

DESIGN DISCHARGE = 3500 C.F.S.
FREQUENCY OF DESIGN FLOOD = 25 YRS.
DESIGN HIGH WATER ELEVATION = 60.8
DRAINAGE AREA = 79.9 SQ. MI.
BASE DISCHARGE (Q100) = 5100 C.F.S.
BASE HIGH WATER ELEVATION = 62.4

OVERTOPPING FLOOD DATA

OVERTOPPING DISCHARGE = 3725± C.F.S.
FREQUENCY OF OVERTOPPING FLOOD = 25+ YRS.
OVERTOPPING FLOOD ELEVATION = ✳61.1±

✳ OT OCCURS @ CENTER -L- STA. 11+70 ✳ ELEV = 61.1

LOW CHORD ELEVATIONS

	ELEVATION @ ℄ BRG.
END BENT 1	61.88
END BENT 2	61.69

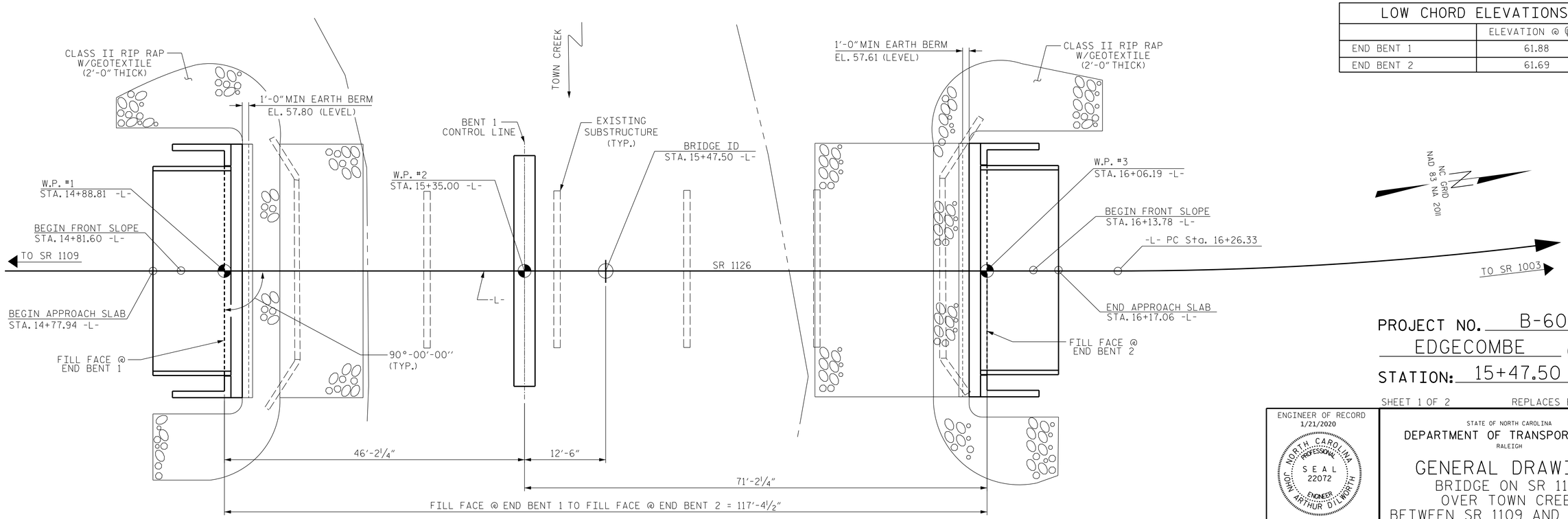

PLAN

(PILES NOT SHOWN IN PLAN VIEW)

PROJECT NO. B-6002
EDGECOMBE COUNTY
STATION: 15+47.50 -L-

SHEET 1 OF 2 REPLACES BRIDGE #64

ENGINEER OF RECORD
1/21/2020
NORTH CAROLINA PROFESSIONAL SEAL 22072 ENGINEER JOHN ARTHUR DILWORTH

Docusigned by: John Arthur Dilworth
5/21/2020

WETHERILL ENGINEERING
1223 Jones Franklin Rd.
Raleigh, N.C. 27606
Bus: 919 851 8077
Fax: 919 851 8107
LICENSE NO. F-0377

STATE OF NORTH CAROLINA
DEPARTMENT OF TRANSPORTATION
RALEIGH

GENERAL DRAWING
BRIDGE ON SR 1126
OVER TOWN CREEK
BETWEEN SR 1109 AND SR 1003

REVISIONS						
NO.	BY:	DATE:	NO.	BY:	DATE:	
1			3			
2			4			

SHEET NO. S-1
TOTAL SHEETS 19

DRAWN BY : J. PENDERGRAFT DATE : 9/18
CHECKED BY : J. DILWORTH DATE : 9/18

DOCUMENT NOT CONSIDERED FINAL UNLESS ALL SIGNATURES COMPLETED

P:\2018\18133.01_EDGECOMBE_64\Structures\DGN\EDGDECOMBE 64 _SMU_GD.dgn
1/21/2020 11:16:22 AM

BM-1 (BL STATION 9+30.00, 51' RIGHT, 18" BIRCH), 74.84' RT OF -L- STA 13+94.88
EL. 56.01; N 754580, E 2384688

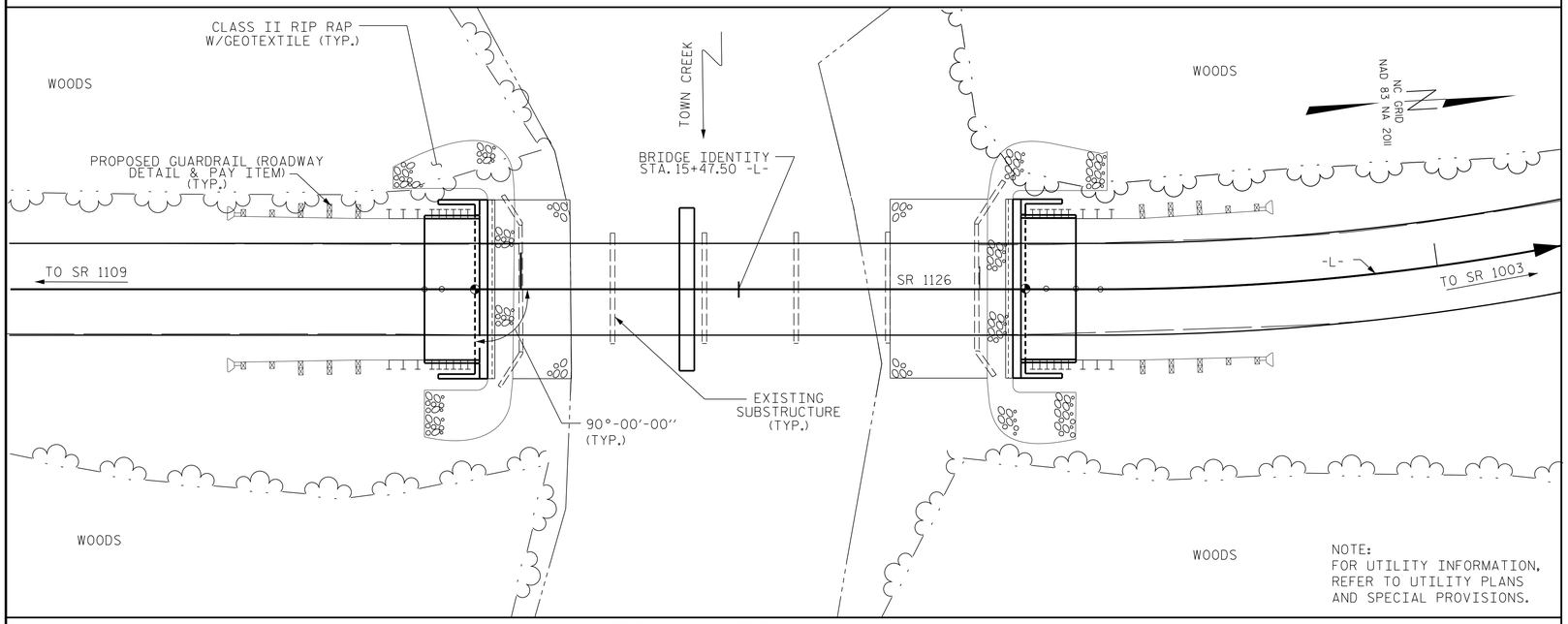

NOTE:
FOR UTILITY INFORMATION,
REFER TO UTILITY PLANS
AND SPECIAL PROVISIONS.

LOCATION SKETCH

FOUNDATION NOTES:

FOR PILES, SEE SECTION 450 OF THE STANDARD SPECIFICATIONS.

PILES AT END BENT NO. 1 ARE DESIGNED FOR A FACTORED RESISTANCE OF 65 TONS PER PILE.

PILES AT END BENT NO. 2 ARE DESIGNED FOR A FACTORED RESISTANCE OF 85 TONS PER PILE.

DRIVE PILES AT END BENT NO. 1 TO A REQUIRED DRIVING RESISTANCE OF 110 TONS PER PILE.

DRIVE PILES AT END BENT NO. 2 TO A REQUIRED DRIVING RESISTANCE OF 145 TONS PER PILE.

PILES AT BENT NO. 1 ARE DESIGNED FOR A FACTORED RESISTANCE OF 125 TONS PER PILE.

DRIVE PILES AT BENT NO. 1 TO A REQUIRED DRIVING RESISTANCE OF 210 TONS PER PILE.

INSTALL PILES AT BENT 1 TO A TIP ELEVATION NO HIGHER THAN 28.0.

THE SCOUR CRITICAL ELEVATION FOR BENT NO. 1 IS ELEVATION 42.0. SCOUR CRITICAL ELEVATIONS ARE USED TO MONITOR POSSIBLE SCOUR PROBLEMS DURING THE LIFE OF THE STRUCTURE.

TESTING PILES WITH THE PDA DURING DRIVING, RESTRIKING OR REDRIVING MAY BE REQUIRED. THE ENGINEER WILL DETERMINE THE NEED FOR PDA TESTING. FOR PDA TESTING, SEE SECTION 450 OF THE STANDARD SPECIFICATIONS.

TOTAL BILL OF MATERIAL

	REMOVAL OF EXISTING STRUCTURE	ASBESTOS ASSESSMENT	PDA TESTING	UNCLASSIFIED STRUCTURE EXCAVATION	CLASS A CONCRETE	BRIDGE APPROACH SLABS	REINFORCING STEEL	PILE DRIVING EQUIPMENT SETUP FOR HP 12x53 STEEL PILES	PILE DRIVING EQUIPMENT SETUP FOR HP 14x73 GALVANIZED STEEL PILES	HP 12 X 53 STEEL PILES		HP 14x73 GALVANIZED STEEL PILES		PILE REDRIVES	VERTICAL CONCRETE BARRIER RAIL	RIP RAP CLASS II (2'-0" THICK)	GEOTEXTILE FOR DRAINAGE	ELASTOMERIC BEARINGS	3'-0" x 1'-9" PRESTRESSED CONCRETE CORED SLABS		3'-0" x 2'-0" PRESTRESSED CONCRETE CORED SLABS		FIBER OPTIC CONDUIT SYSTEM
	LUMP SUM	LUMP SUM	EA.	LUMP SUM	CU. YDS.	LUMP SUM	LBS.	EA.	EA.	NO.	LIN. FT.	NO.	LIN. FT.	EA.	LIN. FT.	TONS	SQ. YDS.	LUMP SUM	No.	LIN. FT.	No.	LIN. FT.	LIN. FT.
SUPERSTRUCTURE															230.50			LUMP SUM	11	495.00	11	770.00	226.50
END BENT 1					21.6		2636	7		7	399			4		120	135						
BENT 1					10.7		2306		8			8	648	4									
END BENT 2					21.8		2636	7		7	399			4		145	160						
TOTAL	LUMP SUM	LUMP SUM	2	LUMP SUM	54.1	LUMP SUM	7578	14	8	14	798	8	648	12	230.50	265	295	LUMP SUM	11	495.00	11	770.00	226.50

NOTES:

ASSUMED LIVE LOAD = HL-93 OR ALTERNATE LOADING.

THIS BRIDGE HAS BEEN DESIGNED IN ACCORDANCE WITH THE AASHTO LRFD BRIDGE DESIGN SPECIFICATIONS.

THIS BRIDGE IS LOCATED IN SEISMIC ZONE 1.

FOR OTHER DESIGN DATA AND GENERAL NOTES, SEE SHEET SN.

FOR SUBMITTAL OF WORKING DRAWINGS, SEE SPECIAL PROVISIONS.

FOR FALSEWORK AND FORMWORK, SEE SPECIAL PROVISIONS.

FOR CRANE SAFETY, SEE SPECIAL PROVISIONS.

FOR GROUT FOR STRUCTURES, SEE SPECIAL PROVISIONS.

THE MATERIAL SHOWN IN THE CROSS-HATCHED AREA ON SHEET S-1 SHALL BE EXCAVATED FOR A DISTANCE OF 30 FT. EACH SIDE OF CENTERLINE ROADWAY AS DIRECTED BY THE ENGINEER. THIS WORK WILL BE PAID FOR AT THE CONTRACT LUMP SUM PRICE FOR UNCLASSIFIED STRUCTURE EXCAVATION. SEE SECTION 412 OF THE STANDARD SPECIFICATIONS.

THE EXISTING STRUCTURE CONSISTING OF 5 SPANS @ 20'-0", WITH A CLEAR ROADWAY WITDTH OF 24'-1" AND HAVING A SUPERSTRUCTURE CONSISTING OF REINFORCED CONCRETE FLOOR ON CONCRETE ENCASED STEEL I-BEAMS AND A SUBSTRUCTURE OF REINFORCED CONCRETE ABUTMENTS AND REINFORCED CONCRETE POST AND BEAM BENTS WIDENED WITH CONCRETE ENCASED H-PILES SHALL BE REMOVED. THE EXISTING STRUCTURE IS CURRENTLY NOT POSTED FOR LOAD LIMIT.

THE SUBSTRUCTURE OF THE EXISTING BRIDGE INDICATED ON THE PLANS IS FROM THE BEST INFORMATION AVAILABLE. SINCE THIS INFORMATION IS SHOWN FOR THE CONVENIENCE OF THE CONTRACTOR, THE CONTRACTOR SHALL HAVE NO CLAIM WHATSOEVER AGAINST THE DEPARTMENT OF TRANSPORTATION FOR ANY DELAYS OR ADDITIONAL COST INCURRED BASED ON DIFFERENCE BETWEEN THE EXISTING BRIDGE SUBSTRUCTURE SHOWN ON THE PLANS AND THE ACTUAL CONDITIONS AT THE PROJECT SITE.

REMOVAL OF THE EXISTING BRIDGE SHALL BE PERFORMED SO AS NOT TO ALLOW DEBRIS TO FALL INTO THE WATER. THE CONTRACTOR SHALL REMOVE THE BRIDGE AND SUBMIT PLANS FOR DEMOLITION IN ACCORDANCE WITH ARTICLE 402-2 OF THE STANDARD SPECIFICATIONS.

THIS STRUCTURE HAS BEEN DESIGNED IN ACCORDANCE WITH "HEC 18-EVALUATING SCOUR AT BRIDGES".

FOR EROSION CONTROL MEASURES, SEE EROSION CONTROL PLANS.

ASPHALT WEARING SURFACE IS INCLUDED IN ROADWAY QUANTITY ON ROADWAY PLANS.

FOR ASBESTOS ASSESSMENT FOR BRIDGE DEMOLITION AND RENOVATION ACTIVITIES, SEE SPECIAL PROVISIONS.

AT THE CONTRACTOR'S OPTION, PRESTRESSED CONCRETE END BENT AND BENT CAPS MAY BE SUBSTITUTED IN PLACE OF THE CAST-IN -PLACE CAPS. THE CONTRACTOR SHALL COORDINATE WITH THE RESIDENT ENGINEER TO RECEIVE REVISED PLANS AND DETAILS FROM THE STRUCTURES MANAGEMENT UNIT. THE REDESIGN AND ANY ADDITIONAL MATERIALS NEEDED WILL BE AT NO ADDITIONAL COST TO THE CONTRACTOR.

FOR INTERIOR BENT No. 1, ONLY PARTIAL GALVANIZING OF THE PILES IS REQUIRED. SEE INTERIOR BENT SHEET FOR REQUIRED GALVANIZED LENGTHS. PAYMENT FOR PARTIALLY GALVANIZED PILES WILL BE MADE UNDER THE CONTRACT UNIT PRICE FOR GALVANIZED STEEL PILES.

INASMUCH AS THE PAINT SYSTEM ON THE EXISTING STRUCTURAL STEEL CONTAINS LEAD, THE CONTRACTOR'S ATTENTION IS DIRECTED TO ARTICLE 107-1 OF THE STANDARD SPECIFICATIONS. ANY COSTS RESULTING FROM COMPLIANCE WITH APPLICABLE STATE OR FEDERAL REGULATIONS PERTAINING TO HANDLING OF MATERIALS CONTAINING LEAD BASED PAINT SHALL BE INCLUDED IN THE BID PRICE FOR "REMOVAL OF EXISTING STRUCTURE AT STATION 15+47.50 -L-."

FOR FIBER OPTIC CONDUIT SYSTEM, SEE SPECIAL PROVISIONS.

PROJECT NO. B-6002
EDGECOMBE COUNTY
STATION: 15+47.50 -L-

SHEET 2 OF 2

ENGINEER OF RECORD
1/21/2020
NORTH CAROLINA PROFESSIONAL SEAL 22072 ENGINEER JOHN ARTHUR DILWORTH
Digitally signed by John Arthur Dilworth
WETHERILL ENGINEERING
1223 Jones Franklin Rd.
Raleigh, N.C. 27606
Bus: 919 851 8077
Fax: 919 851 8107
LICENSE NO. F-0377

STATE OF NORTH CAROLINA
DEPARTMENT OF TRANSPORTATION
RALEIGH

GENERAL DRAWING
BRIDGE ON SR 1126
OVER TOWN CREEK
BETWEEN SR 1109 AND SR 1003

REVISIONS						SHEET NO.
NO.	BY:	DATE:	NO.	BY:	DATE:	S-2
1			3			TOTAL SHEETS
2			4			19

DRAWN BY : J. PENDERGRAFT DATE : 9-18
CHECKED BY : J. DILWORTH DATE : 10-18

DOCUMENT NOT CONSIDERED FINAL UNLESS ALL SIGNATURES COMPLETED

P:\2018\18133.01_EDGECOMBE_64\Structures\DGN\EDGECOMBE 64 _SMU_GD.dgn
1/21/2020 11:16:41 AM

LOAD AND RESISTANCE FACTOR RATING (LRFD) SUMMARY FOR PRESTRESSED CONCRETE GIRDERS

LEVEL		VEHICLE	WEIGHT (W) (TONS)	CONTROLLING LOAD RATING	MINIMUM RATING FACTORS (RF)	TONS = W X RF	STRENGTH I LIMIT STATE											SERVICE III LIMIT STATE						COMMENT NUMBER
								MOMENT					SHEAR						MOMENT					
							LIVELOAD FACTORS	DISTRIBUTION FACTORS (DF)	RATING FACTOR	SPAN	GIRDER LOCATION	DISTANCE FROM LEFT END OF SPAN (ft)	DISTRIBUTION FACTORS (DF)	RATING FACTOR	SPAN	GIRDER LOCATION	DISTANCE FROM LEFT END OF SPAN (ft)	LIVELOAD FACTORS	DISTRIBUTION FACTORS (DF)	RATING FACTOR	SPAN	GIRDER LOCATION	DISTANCE FROM LEFT END OF SPAN (ft)	
DESIGN LOAD RATING		HL-93(Inv)	N/A	1	1.088	--	1.75	0.277	1.34	45'	EL	22	0.539	1.23	45'	EL	2.2	0.80	0.277	1.09	45'	EL	22	
		HL-93(Opr)	N/A	--	1.590	--	1.35	0.277	1.74	45'	EL	22	0.539	1.59	45'	EL	2.2	N/A	--	--	--	--	--	
		HS-20(Inv)	36.000	2	1.336	48.104	1.75	0.277	1.65	45'	EL	22	0.539	1.45	45'	EL	2.2	0.80	0.277	1.34	45'	EL	22	
		HS-20(Opr)	36.000	--	1.882	67.763	1.35	0.277	2.14	45'	EL	22	0.539	1.88	45'	EL	2.2	N/A	--	--	--	--	--	
LEGAL LOAD RATING	SV	SNSH	13.500	--	2.611	35.252	1.4	0.277	4.02	45'	EL	22	0.539	4.01	45'	EL	2.2	0.80	0.277	2.61	45'	EL	22	
		SNGARBS2	20.000	--	2.108	42.166	1.4	0.277	3.25	45'	EL	22	0.539	2.94	45'	EL	2.2	0.80	0.277	2.11	45'	EL	22	
		SNAGRIS2	22.000	--	2.067	45.466	1.4	0.277	3.15	45'	EL	17.6	0.539	2.77	45'	EL	2.2	0.80	0.277	2.07	45'	EL	22	
		SNCOTTS3	27.250	--	1.304	35.527	1.4	0.277	2.01	45'	EL	22	0.539	2.01	45'	EL	2.2	0.80	0.277	1.30	45'	EL	22	
		SNAGGRS4	34.925	--	1.150	40.181	1.4	0.277	1.77	45'	EL	22	0.539	1.74	45'	EL	2.2	0.80	0.277	1.15	45'	EL	22	
		SNS5A	35.550	--	1.121	39.841	1.4	0.277	1.73	45'	EL	22	0.539	1.79	45'	EL	2.2	0.80	0.277	1.12	45'	EL	22	
		SNS6A	39.950	--	1.056	42.175	1.4	0.277	1.63	45'	EL	22	0.539	1.67	45'	EL	2.2	0.80	0.277	1.06	45'	EL	22	
		SNS7B	42.000	3	1.006	42.268	1.4	0.277	1.55	45'	EL	22	0.539	1.68	45'	EL	2.2	0.80	0.277	1.01	45'	EL	22	
	TTST	TNAGRIT3	33.000	--	1.296	42.759	1.4	0.277	2	45'	EL	22	0.539	1.96	45'	EL	2.2	0.80	0.277	1.30	45'	EL	22	
		TNT4A	33.075	--	1.309	43.305	1.4	0.277	2.02	45'	EL	22	0.539	1.88	45'	EL	2.2	0.80	0.277	1.31	45'	EL	22	
		TNT6A	41.600	--	1.099	45.712	1.4	0.277	1.69	45'	EL	22	0.539	1.83	45'	EL	2.2	0.80	0.277	1.10	45'	EL	22	
		TNT7A	42.000	--	1.120	47.043	1.4	0.277	1.73	45'	EL	22	0.539	1.69	45'	EL	2.2	0.80	0.277	1.12	45'	EL	22	
		TNT7B	42.000	--	1.166	48.975	1.4	0.277	1.8	45'	EL	22	0.539	1.61	45'	EL	2.2	0.80	0.277	1.17	45'	EL	22	
		TNAGRIT4	43.000	--	1.111	47.757	1.4	0.277	1.71	45'	EL	22	0.539	1.55	45'	EL	2.2	0.80	0.277	1.11	45'	EL	22	
		TNAGT5A	45.000	--	1.033	46.505	1.4	0.277	1.59	45'	EL	22	0.539	1.59	45'	EL	2.2	0.80	0.277	1.03	45'	EL	22	
		TNAGT5B	45.000	--	1.009	45.408	1.4	0.277	1.56	45'	EL	22	0.539	1.47	45'	EL	2.2	0.80	0.277	1.01	45'	EL	22	

LOAD FACTORS:

	LIMIT STATE	γ_{DC}	γ_{DW}
DESIGN LOAD RATING FACTORS	STRENGTH I	1.25	1.50
	SERVICE III	1.00	1.00

NOTES:

MINIMUM RATING FACTORS ARE BASED ON THE STRENGTH I AND SERVICE III LIMIT STATES.

ALLOWABLE STRESSES FOR SERVICE III LIMIT STATE ARE AS REQUIRED FOR DESIGN.

COMMENTS:

1.
2.
3.
4.

(#) CONTROLLING LOAD RATING

(1) DESIGN LOAD RATING (HL-93)

(2) DESIGN LOAD RATING (HS-20)

(3) LEGAL LOAD RATING **

** SEE CHART FOR VEHICLE TYPE

GIRDER LOCATION

I - INTERIOR GIRDER
EL - EXTERIOR LEFT GIRDER
ER - EXTERIOR RIGHT GIRDER

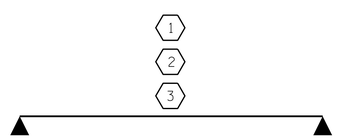

LRFR SUMMARY

FOR SPAN 'A'

PROJECT NO. B-6002

EDGECOMBE COUNTY

STATION: 15+47.50 -L-

ENGINEER OF RECORD
12/11/2019

NORTH CAROLINA PROFESSIONAL SEAL 22072 ENGINEER JOHN ARTHUR DILWORTH

Docusigned by: John Arthur Dilworth

WETHERILL ENGINEERING

1223 Jones Franklin Rd.
Raleigh, N.C. 27606
Bus: 919 851 8077
Fax: 919 851 8107
LICENSE NO. F-0377

STATE OF NORTH CAROLINA
DEPARTMENT OF TRANSPORTATION
RALEIGH

STANDARD

LRFR SUMMARY FOR 45' CORED SLAB UNIT 90° SKEW

(NON-INTERSTATE TRAFFIC)

REVISIONS						SHEET NO.
NO.	BY:	DATE:	NO.	BY:	DATE:	S-3
1			3			TOTAL SHEETS
2			4			19

STD. NO. 21LRFR1_90S_45L

DOCUMENT NOT CONSIDERED FINAL UNLESS ALL SIGNATURES COMPLETED

ASSEMBLED BY : J. PENDERGRAFT	DATE : 9-18		
CHECKED BY : J. DILWORTH	DATE : 9-18		
DRAWN BY : CVC	6/10		
CHECKED BY : DNS	6/10		

P:\2018\18133.01_EDGECOMBE_64\Structures\DGN\EDGDECOMBE 64 _SMU_LR.dgn
12/10/2019 2:43:18 PM

LOAD AND RESISTANCE FACTOR RATING (LRFD) SUMMARY FOR PRESTRESSED CONCRETE GIRDERS

LEVEL		VEHICLE	WEIGHT (W) (TONS)	CONTROLLING LOAD RATING	MINIMUM RATING FACTORS (RF)	TONS = W X RF	STRENGTH I LIMIT STATE											SERVICE III LIMIT STATE						COMMENT NUMBER
							LIVELOAD FACTORS	MOMENT					SHEAR					LIVELOAD FACTORS	MOMENT					
								DISTRIBUTION FACTORS (DF)	RATING FACTOR	SPAN	GIRDER LOCATION	DISTANCE FROM LEFT END OF SPAN (ft)	DISTRIBUTION FACTORS (DF)	RATING FACTOR	SPAN	GIRDER LOCATION	DISTANCE FROM LEFT END OF SPAN (ft)		DISTRIBUTION FACTORS (DF)	RATING FACTOR	SPAN	GIRDER LOCATION	DISTANCE FROM LEFT END OF SPAN (ft)	
DESIGN LOAD RATING		HL-93(Inv)	N/A	1	1.006	--	1.75	0.273	1.03	70'	EL	34.5	0.507	1.32	70'	EL	6.9	0.80	0.273	**1.01**	70'	EL	**34.5**	
		HL-93(Opr)	N/A	--	1.341	--	1.35	0.273	1.34	70'	EL	34.5	0.507	1.72	70'	EL	6.9	N/A	--	--	--	--	--	
		HS-20(Inv)	36.000	2	1.306	47.02	1.75	0.273	1.34	70'	EL	34.5	0.507	1.65	70'	EL	6.9	0.80	0.273	**1.31**	70'	EL	**34.5**	
		HS-20(Opr)	36.000	--	1.74	62.64	1.35	0.273	1.74	70'	EL	34.5	0.507	2.14	70'	EL	6.9	N/A	--	--	--	--	--	
LEGAL LOAD RATING	SV	SNSH	13.500	--	2.917	39.379	1.4	0.273	3.75	70'	EL	34.5	0.507	4.87	70'	EL	6.9	0.80	0.273	2.92	70'	EL	34.5	
		SNGARBS2	20.000	--	2.187	43.741	1.4	0.273	2.81	70'	EL	34.5	0.507	3.47	70'	EL	6.9	0.80	0.273	2.19	70'	EL	34.5	
		SNAGRIS2	22.000	--	2.077	45.69	1.4	0.273	2.67	70'	EL	34.5	0.507	3.23	70'	EL	6.9	0.80	0.273	2.08	70'	EL	34.5	
		SNCOTTS3	27.250	--	1.452	39.565	1.4	0.273	1.87	70'	EL	34.5	0.507	2.43	70'	EL	6.9	0.80	0.273	1.45	70'	EL	34.5	
		SNAGGRS4	34.925	--	1.218	42.554	1.4	0.273	1.57	70'	EL	34.5	0.507	2.03	70'	EL	6.9	0.80	0.273	1.22	70'	EL	34.5	
		SNS5A	35.550	--	1.191	42.346	1.4	0.273	1.53	70'	EL	34.5	0.507	2.06	70'	EL	6.9	0.80	0.273	1.19	70'	EL	34.5	
		SNS6A	39.950	--	1.095	43.747	1.4	0.273	1.41	70'	EL	34.5	0.507	1.88	70'	EL	6.9	0.80	0.273	1.10	70'	EL	34.5	
		SNS7B	42.000	--	1.043	43.801	1.4	0.273	1.34	70'	EL	34.5	0.507	1.85	70'	EL	6.9	0.80	0.273	1.04	70'	EL	34.5	
	TTST	TNAGRIT3	33.000	--	1.336	44.087	1.4	0.273	1.72	70'	EL	34.5	0.507	2.23	70'	EL	6.9	0.80	0.273	1.34	70'	EL	34.5	
		TNT4A	33.075	--	1.342	44.401	1.4	0.273	1.72	70'	EL	34.5	0.507	2.17	70'	EL	6.9	0.80	0.273	1.34	70'	EL	34.5	
		TNT6A	41.600	--	1.1	45.746	1.4	0.273	1.41	70'	EL	34.5	0.507	1.98	70'	EL	6.9	0.80	0.273	1.10	70'	EL	34.5	
		TNT7A	42.000	--	1.106	46.462	1.4	0.273	1.42	70'	EL	34.5	0.507	1.94	70'	EL	6.9	0.80	0.273	1.11	70'	EL	34.5	
		TNT7B	42.000	--	1.147	48.18	1.4	0.273	1.47	70'	EL	34.5	0.507	1.8	70'	EL	6.9	0.80	0.273	1.15	70'	EL	34.5	
		TNAGRIT4	43.000	--	1.089	46.838	1.4	0.273	1.4	70'	EL	34.5	0.507	1.74	70'	EL	6.9	0.80	0.273	1.09	70'	EL	34.5	
		TNAGT5A	45.000	--	1.026	46.175	1.4	0.273	1.32	70'	EL	34.5	0.507	1.74	70'	EL	6.9	0.80	0.273	1.03	70'	EL	34.5	
		TNAGT5B	45.000	3	1.013	45.579	1.4	0.273	1.3	70'	EL	34.5	0.507	1.66	70'	EL	6.9	0.80	0.273	**1.01**	70'	EL	**34.5**	

LOAD FACTORS:

DESIGN LOAD RATING FACTORS	LIMIT STATE	γ_{DC}	γ_{DW}
	STRENGTH I	1.25	1.50
	SERVICE III	1.00	1.00

NOTES:

MINIMUM RATING FACTORS ARE BASED ON THE STRENGTH I AND SERVICE III LIMIT STATES.

ALLOWABLE STRESSES FOR SERVICE III LIMIT STATE ARE AS REQUIRED FOR DESIGN.

COMMENTS:

1.
2.
3.
4.

(#) CONTROLLING LOAD RATING

(1) DESIGN LOAD RATING (HL-93)

(2) DESIGN LOAD RATING (HS-20)

(3) LEGAL LOAD RATING **

** SEE CHART FOR VEHICLE TYPE

GIRDER LOCATION

I - INTERIOR GIRDER
EL - EXTERIOR LEFT GIRDER
ER - EXTERIOR RIGHT GIRDER

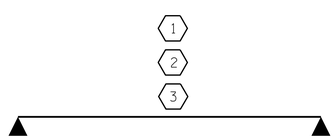

LRFR SUMMARY

FOR SPAN 'B'

PROJECT NO. B-6002

EDGECOMBE COUNTY

STATION: 15+47.50 -L-

ASSEMBLED BY : J. PENDERGRAFT DATE : 9-18
CHECKED BY : J. DILWORTH DATE : 9-18

DRAWN BY : CVC 6/10
CHECKED BY : DNS 6/10

DOCUMENT NOT CONSIDERED FINAL UNLESS ALL SIGNATURES COMPLETED

ENGINEER OF RECORD
12/11/2019

NORTH CAROLINA PROFESSIONAL SEAL 22072 ENGINEER JOHN ARTHUR DILWORTH

DocuSigned by: John Arthur Dilworth

WETHERILL ENGINEERING
1223 Jones Franklin Rd.
Raleigh, N.C. 27606
Bus: 919 851 8077
Fax: 919 851 8107
LICENSE NO. F-0377

STATE OF NORTH CAROLINA
DEPARTMENT OF TRANSPORTATION
RALEIGH

STANDARD
LRFR SUMMARY FOR
70' CORED SLAB UNIT
90° SKEW
(NON-INTERSTATE TRAFFIC)

REVISIONS						SHEET NO.
NO.	BY:	DATE:	NO.	BY:	DATE:	S-4
1			3			TOTAL SHEETS
2			4			19

STD. NO. 24LRFR1_90S_70L

P:\2018\18133.01_EDGECOMBE_64\Structures\DGN\EDGDECOMBE 64 _SMU_LR.dgn
12/10/2019 2:43:37 PM

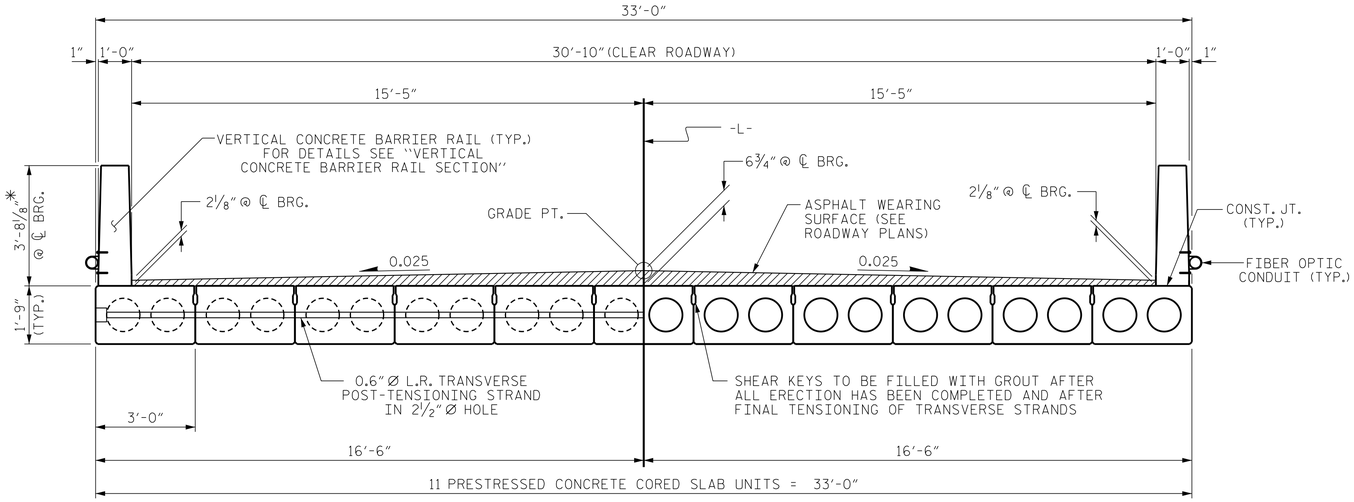

HALF SECTION
AT INTERMEDIATE DIAPHRAGMS

HALF SECTION
THROUGH VOIDS

TYPICAL SECTION

* - THE MAXIMUM BARRIER RAIL HEIGHT AND ASPHALT THICKNESS IS SHOWN. THE HEIGHT OF THE BARRIER RAIL AND ASPHALT THICKNESS VARIES WHILE THE TOP OF THE BARRIER RAIL FOLLOWS THE PROFILE OF THE GUTTERLINE. FOR RAIL HEIGHT DETAILS AND ASPHALT THICKNESS SEE THE "VERTICAL CONCRETE BARRIER RAIL SECTION" DETAIL.

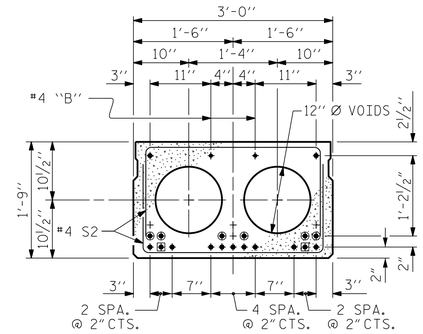

INTERIOR SLAB SECTION
(45' UNIT)
(13 STRANDS REQUIRED)

0.6" Ø LOW RELAXATION STRAND LAYOUT

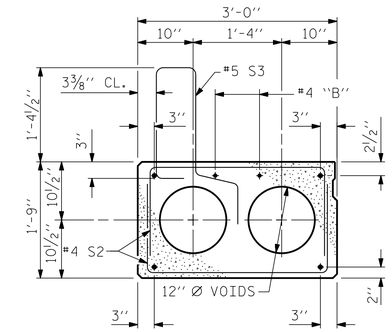

EXT. SLAB SECTION

(FOR PRESTRESSED STRAND LAYOUT, SEE INTERIOR SLAB SECTION.)

◉ BOND SHALL BE BROKEN ON THESE STRANDS FOR A DISTANCE OF 2'-0" FROM END OF CORED SLAB UNIT. SEE STANDARD SPECIFICATIONS, ARTICLE 1078-7.

◉ OPTIONAL FULL LENGTH DEBONDED STRANDS. THESE STRANDS ARE NOT REQUIRED. IF THE FABRICATOR CHOOSES TO INCLUDE THESE STRANDS IN THE CORED SLAB UNIT, THE STRANDS SHALL BE DEBONDED FOR THE FULL LENGTH OF THE UNIT AT NO ADDITIONAL COST. SEE STANDARD SPECIFICATIONS, ARTICLE 1078-7.

DEBONDING LEGEND

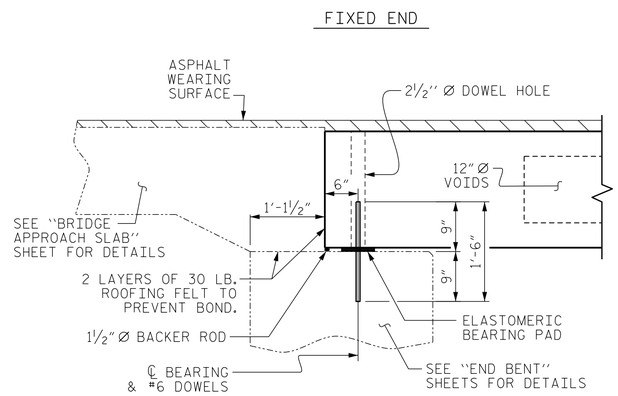

SECTION AT END BENT

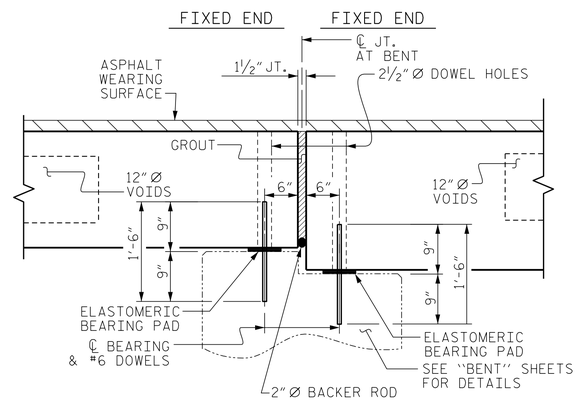

SECTION AT BENT

PERMITTED THREADED INSERT CAST IN OUTSIDE FACE OF EXTERIOR UNIT AND RECESSED ⅜", SIZE TO BE DETERMINED BY CONTRACTOR.

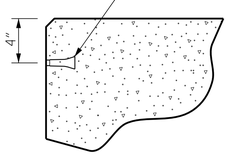

THREADED INSERT DETAIL

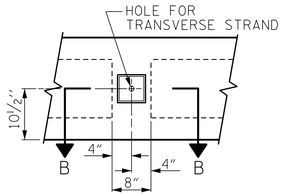

ELEVATION VIEW

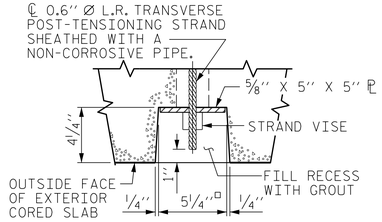

SECTION B-B

GROUTED RECESS AT END OF POST-TENSIONED STRAND OF CORED SLABS

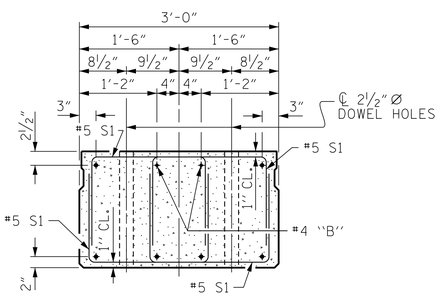

END ELEVATION

SHOWING PLACEMENT OF DOUBLE STIRRUPS AND LOCATION OF DOWEL HOLES. (STRAND LAYOUT NOT SHOWN.) INTERIOR SLAB UNIT SHOWN-EXTERIOR SLAB UNIT SIMILAR EXCEPT SHEAR KEY LOCATION.

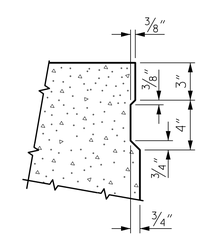

SHEAR KEY DETAIL

NOTE: OMIT SHEAR KEY ON OUTSIDE FACE OF EXTERIOR CORED SLABS.

PROJECT NO. B-6002
EDGECOMBE COUNTY
STATION: 15+47.50 -L-

SHEET 1 OF 3

ASSEMBLED BY : J. PENDERGRAFT	DATE : 9-18
CHECKED BY : J. DILWORTH	DATE : 9-18
DRAWN BY : DGE 5/09	REV. 9/14 MAA/TMG
CHECKED BY : BCH 6/09	

DOCUMENT NOT CONSIDERED FINAL UNLESS ALL SIGNATURES COMPLETED

ENGINEER OF RECORD
12/11/2019
NORTH CAROLINA PROFESSIONAL SEAL 22072 ENGINEER JOHN ARTHUR DILWORTH
DocuSigned by: John Arthur Dilworth
WETHERILL ENGINEERING
1223 Jones Franklin Rd.
Raleigh, N.C. 27606
Bus: 919 851 8077
Fax: 919 851 8107
LICENSE NO. F-0377

STATE OF NORTH CAROLINA
DEPARTMENT OF TRANSPORTATION
RALEIGH

STANDARD
3'-0" X 1'-9"
PRESTRESSED CONCRETE CORED SLAB UNIT
90° SKEW
(SPAN A)

REVISIONS						SHEET NO.
NO.	BY:	DATE:	NO.	BY:	DATE:	S-5
1			3			TOTAL SHEETS
2			4			19

STD. NO. 21" PCS2_33_90S

P:\2018\18133.01_EDGECOMBE_64\Structures\DGN\EDGECOMBE 64 _SMU_TS.dgn
12/10/2019 2:44:16 PM

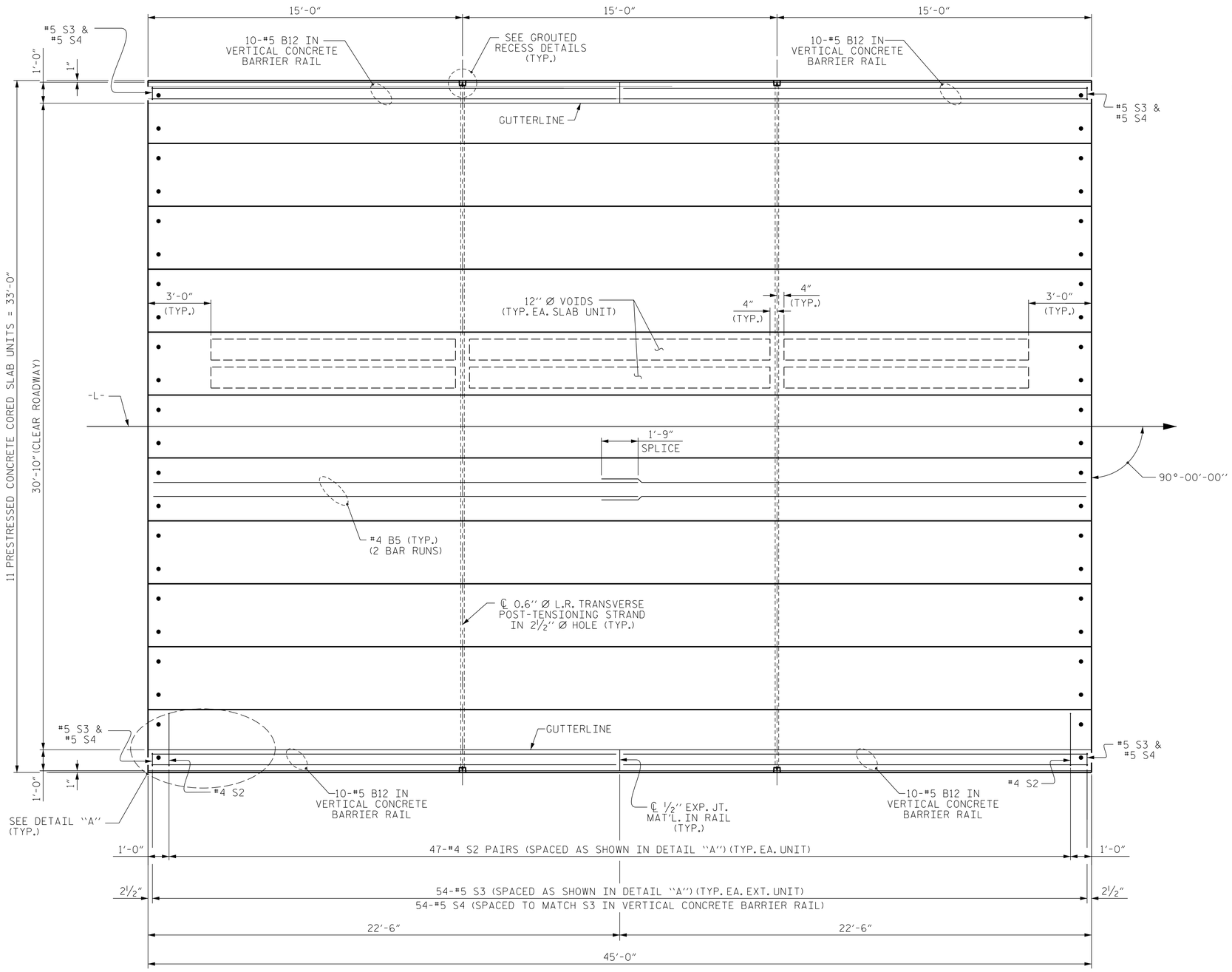

PLAN OF UNIT

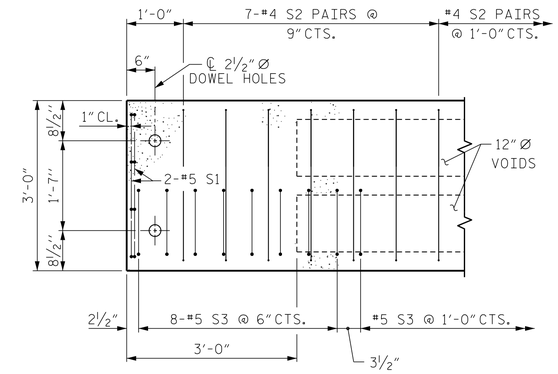

DETAIL "A"

(TYPICAL EACH END OF UNIT)
NOTE: EXTERIOR UNIT SHOWN - INTERIOR UNIT SIMILAR EXCEPT OMIT #5 S3 BARS.

PROJECT NO. B-6002
EDGECOMBE COUNTY
STATION: 15+47.50 -L-

SHEET 2 OF 3

ENGINEER OF RECORD
12/11/2019
NORTH CAROLINA PROFESSIONAL SEAL 22072 ENGINEER JOHN ARTHUR DILWORTH
Docusigned by: John Arthur Dilworth
WETHERILL ENGINEERING
1223 Jones Franklin Rd.
Raleigh, N.C. 27606
Bus: 919 851 8077
Fax: 919 851 8107
LICENSE NO. F-0377

STATE OF NORTH CAROLINA
DEPARTMENT OF TRANSPORTATION
RALEIGH

PLAN OF 45' UNIT
30'-10" CLEAR ROADWAY
90° SKEW
(SPAN A)

REVISIONS						SHEET NO.
NO.	BY:	DATE:	NO.	BY:	DATE:	S-6
1			3			TOTAL SHEETS
2			4			19

ASSEMBLED BY : J. PENDERGRAFT		DATE :	9-18
CHECKED BY : J. DILWORTH		DATE :	9-18
DRAWN BY : DGE 3/09	REV. 12/5/11	MAA/AAC	
CHECKED BY : BCH 3/09	REV. 8/14	MAA/TMG	

DOCUMENT NOT CONSIDERED FINAL UNLESS ALL SIGNATURES COMPLETED

STD. NO. 21" PCS_33_90S_45L

P:\2018\18133.01_EDGECOMBE_64\Structures\DGN\EDGDECOMBE 64 _SMU_PS.dgn
12/10/2019 2:45:05 PM

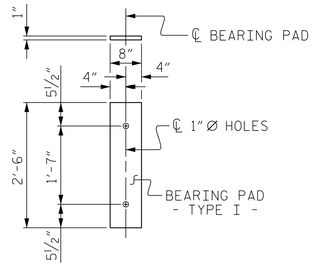

FIXED END
(TYPE I - 22 REQ'D)

ELASTOMERIC BEARING DETAILS

ELASTOMER IN ALL BEARINGS SHALL BE 60 DUROMETER HARDNESS.

BILL OF MATERIAL FOR ONE 45' CORED SLAB UNIT

BAR	NUMBER	SIZE	TYPE	EXTERIOR UNIT LENGTH	EXTERIOR UNIT WEIGHT	INTERIOR UNIT LENGTH	INTERIOR UNIT WEIGHT
B5	4	#4	STR	23'-3"	62	23'-3"	62
S1	8	#5	3	4'-3"	35	4'-3"	35
S2	94	#4	3	5'-4"	335	5'-4"	335
✳ S3	54	#5	1	5'-7"	314		
REINFORCING STEEL			LBS.		432		432
✳ EPOXY COATED REINFORCING STEEL			LBS.		314		
5000 P.S.I. CONCRETE			CU. YDS.		6.5		6.5
0.6"Ø L.R. STRANDS			No.		13		13

BILL OF MATERIAL FOR VERTICAL CONCRETE BARRIER RAIL

BAR	BARS PER PAIR OF EXTERIOR UNITS	TOTAL NO.	SIZE	TYPE	LENGTH	WEIGHT
	45' UNIT					
✳ B12	40	40	#5	STR	22'-1"	921
✳ S4	108	108	#5	2	7'-2"	807
✳ EPOXY COATED REINFORCING STEEL				LBS.		1728
CLASS AA CONCRETE				CU.YDS.		11.5
TOTAL VERTICAL CONCRETE BARRIER RAIL				LN. FT.		90.25

CORED SLABS REQUIRED

	NUMBER	LENGTH	TOTAL LENGTH
45' UNIT			
EXTERIOR C.S.	2	45'-0"	90'-0"
INTERIOR C.S.	9	45'-0"	405'-0"
TOTAL			495'-0"

GRADE 270 STRANDS

	0.6"Ø L.R.
AREA (SQUARE INCHES)	0.217
ULTIMATE STRENGTH (LBS. PER STRAND)	58,600
APPLIED PRESTRESS (LBS. PER STRAND)	43,950

DEAD LOAD DEFLECTION AND CAMBER

	3'-0" x 1'-9"
45' CORED SLAB UNIT	0.6"Ø L.R. STRAND
CAMBER (SLAB ALONE IN PLACE)	⅞" ↑
DEFLECTION DUE TO SUPERIMPOSED DEAD LOAD ✳✳	⅛" ↓
FINAL CAMBER	¾" ↑

✳✳ INCLUDES FUTURE WEARING SURFACE

CONCRETE RELEASE STRENGTH

UNIT	PSI
45' UNITS	4000

BAR TYPES

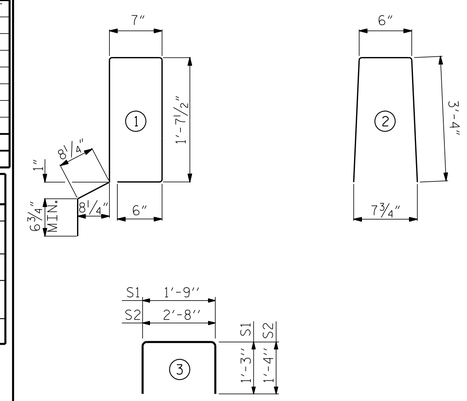

ALL BAR DIMENSIONS ARE OUT TO OUT

NOTES

ALL PRESTRESSING STRANDS SHALL BE 7-WIRE LOW RELAXATION GRADE 270 STRANDS AND SHALL CONFORM TO AASHTO M203 EXCEPT FOR SAMPLING REQUIREMENTS WHICH SHALL BE IN ACCORDANCE WITH THE STANDARD SPECIFICATIONS.

ALL REINFORCING STEEL CAST WITH THE CORED SLAB SECTIONS SHALL BE GRADE 60 AND SHALL BE INCLUDED IN THE UNIT PRICE BID FOR PRESTRESSED CONCRETE CORED SLABS.

RECESSES FOR TRANSVERSE STRANDS SHALL BE GROUTED AFTER THE TENSIONING OF THE STRANDS.

THE 2½"Ø DOWEL HOLES AT FIXED ENDS OF SLAB SECTIONS SHALL BE FILLED WITH NON-SHRINK GROUT.

THE BACKER RODS SHALL CONFORM TO THE REQUIREMENTS OF TYPE M BOND BREAKER. SEE SECTION 1028 OF THE STANDARD SPECIFICATIONS.

WHEN CORED SLABS ARE CAST, AN INTERNAL HOLD-DOWN SYSTEM SHALL BE EMPLOYED TO PREVENT VOIDS FROM RISING OR MOVING SIDEWAYS. AT LEAST SIX WEEKS PRIOR TO CASTING CORED SLABS, THE CONTRACTOR SHALL SUBMIT TO THE ENGINEER FOR REVIEW AND COMMENT, DETAILED DRAWINGS OF THE PROPOSED HOLD-DOWN SYSTEM. IN ADDITION TO STRUCTURAL DETAILS, LOCATION AND SPACING OF THE HOLD-DOWNS SHALL BE INDICATED.

ALL REINFORCING STEEL IN THE VERTICAL CONCRETE BARRIER RAIL SHALL BE EPOXY COATED.

PRESTRESSING STRANDS SHALL BE CUT FLUSH WITH THE CORED SLAB UNIT ENDS.

APPLY EPOXY PROTECTIVE COATING TO CORED SLAB UNIT ENDS.

GROOVED CONTRACTION JOINTS, ½" IN DEPTH, SHALL BE TOOLED IN ALL EXPOSED FACES OF THE BARRIER RAIL AND IN ACCORDANCE WITH ARTICLE 825-10(B) OF THE STANDARD SPECIFICATIONS. A CONTRACTION JOINT SHALL BE LOCATED AT EACH THIRD POINT BETWEEN BARRIER RAIL EXPANSION JOINTS. ONLY ONE CONTRACTION JOINT IS REQUIRED AT MIDPOINT OF BARRIER RAIL SEGMENTS LESS THAN 20 FEET IN LENGTH AND NO CONTRACTION JOINTS ARE REQUIRED FOR THOSE SEGMENTS LESS THAN 10 FEET IN LENGTH.

FLAME CUTTING OF THE TRANSVERSE POST-TENSIONING STRAND IS NOT ALLOWED.

THE TRANSFER OF LOAD FROM THE ANCHORAGES TO THE CORED SLAB UNIT SHALL BE DONE WHEN THE CONCRETE HAS REACHED A COMPRESSIVE STRENGTH OF NOT LESS THAN THE REQUIRED STRENGTH SHOWN IN THE "CONCRETE RELEASE STRENGTH" TABLE.

FOR GROUT FOR STRUCTURES, SEE SPECIAL PROVISIONS.

THE PERMITTED THREADED INSERTS ARE DETAILED AS AN OPTION FOR THE CONTRACTOR TO ATTACH FALSEWORK AND FORMWORK DURING CONSTRUCTION.

THE PERMITTED THREADED INSERTS IN THE EXTERIOR UNITS SHALL BE SIZED BY THE CONTRACTOR, SPACED AT 4'-0" CENTERS AND GALVANIZED IN ACCORDANCE WITH SECTION 1076 OF THE STANDARD SPECIFICATIONS. STAINLESS STEEL THREADED INSERTS MAY BE USED AS AN ALTERNATE.

THE PERMITTED THREADED INSERTS SHALL BE GROUTED BY THE CONTRACTOR IMMEDIATELY FOLLOWING REMOVAL OF THE FALSEWORK.

THE COST OF THE PERMITTED THREADED INSERTS SHALL BE INCLUDED IN THE PRICE BID FOR THE PRECAST UNITS.

GUTTERLINE ASPHALT THICKNESS & RAIL HEIGHT

	ASPHALT OVERLAY THICKNESS @ MID-SPAN	RAIL HEIGHT @ MID-SPAN
45' UNITS	1⅞"	3'-7⅞"

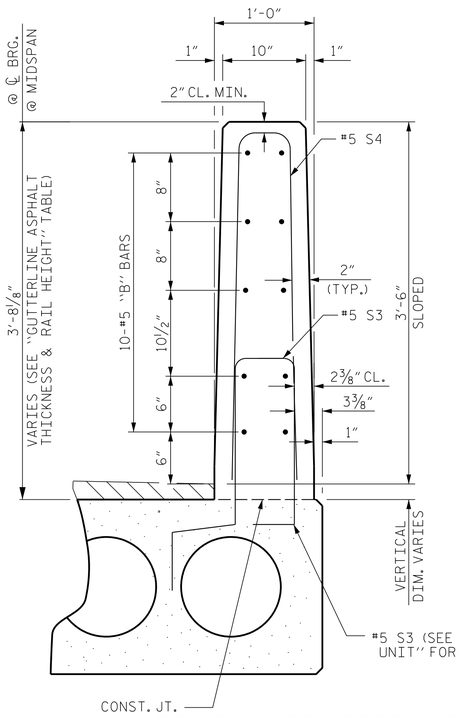

VERTICAL CONCRETE BARRIER RAIL SECTION

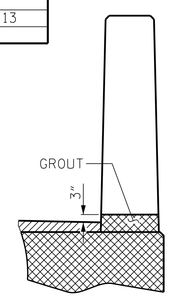

SECTION T-T
AT OPEN JOINT AT BENT
(THIS IS TO BE USED WHERE FOAM JOINT IS NOT USED)

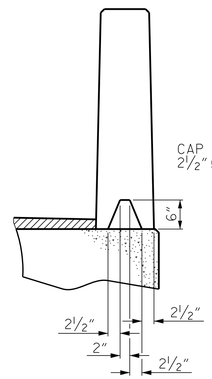

SECTION S-S
AT DAM IN OPEN JOINT
(THIS IS TO BE USED ONLY WHEN SLIP FORM IS USED)

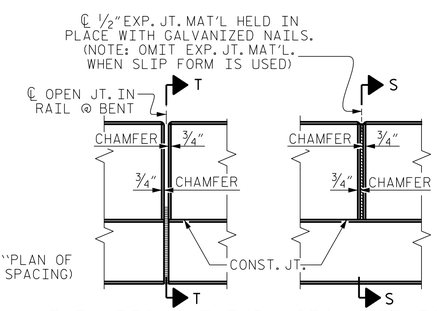

ELEVATION AT EXPANSION JOINTS

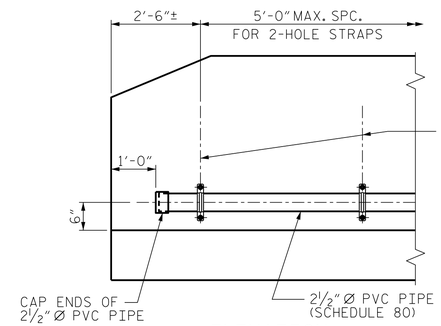

ELEVATION

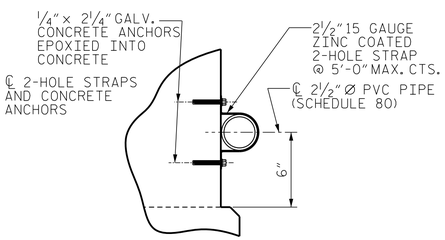

SECTION

FIBER OPTIC CONDUIT SYSTEM DETAILS

2½"Ø SCHEDULE 80 PVC PIPE ATTACHED TO THE BACK OF BOTH RAILS FOR FUTURE FIBER OPTIC CABLE.

FIBER OPTIC CONDUIT SYSTEM 88.25 LIN. FT.

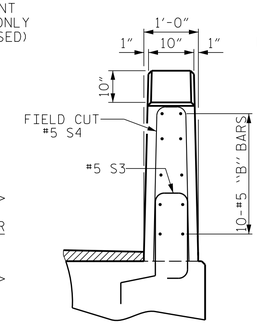

END VIEW

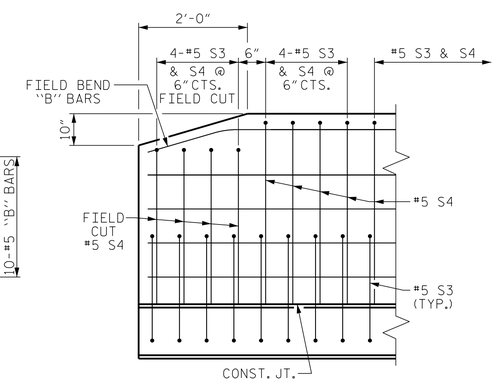

SIDE VIEW

END OF RAIL DETAILS

PROJECT NO. B-6002
EDGECOMBE COUNTY
STATION: 15+47.50 -L-

SHEET 3 OF 3

ENGINEER OF RECORD
12/11/2019
NORTH CAROLINA PROFESSIONAL SEAL 22072 ENGINEER JOHN ARTHUR DILWORTH
Docusigned by: John Arthur Dilworth
WETHERILL ENGINEERING
1223 Jones Franklin Rd.
Raleigh, N.C. 27606
Bus: 919 851 8077
Fax: 919 851 8107
LICENSE NO. F-0377

STATE OF NORTH CAROLINA
DEPARTMENT OF TRANSPORTATION
RALEIGH

STANDARD
3'-0" X 1'-9"
PRESTRESSED CONCRETE
CORED SLAB UNIT
90° SKEW
(SPAN A)

REVISIONS						SHEET NO.
NO.	BY:	DATE:	NO.	BY:	DATE:	S-7
1			3			TOTAL SHEETS
2			4			19

STD. NO. 21"PCS3_33_90S

ASSEMBLED BY : J. PENDERGRAFT	DATE : 9-18		
CHECKED BY : J. DILWORTH	DATE : 9-18		
DRAWN BY : DGE 5/09	REV. 5/18	MAA/THC	
CHECKED BY : BCH 6/09			

DOCUMENT NOT CONSIDERED FINAL UNLESS ALL SIGNATURES COMPLETED

P:\2018\181330.1_EDGECOMBE_64\Structures\DGN\EDGECOMBE 64 _SMU_CS.dgn
12/10/2019 2:45:47 PM

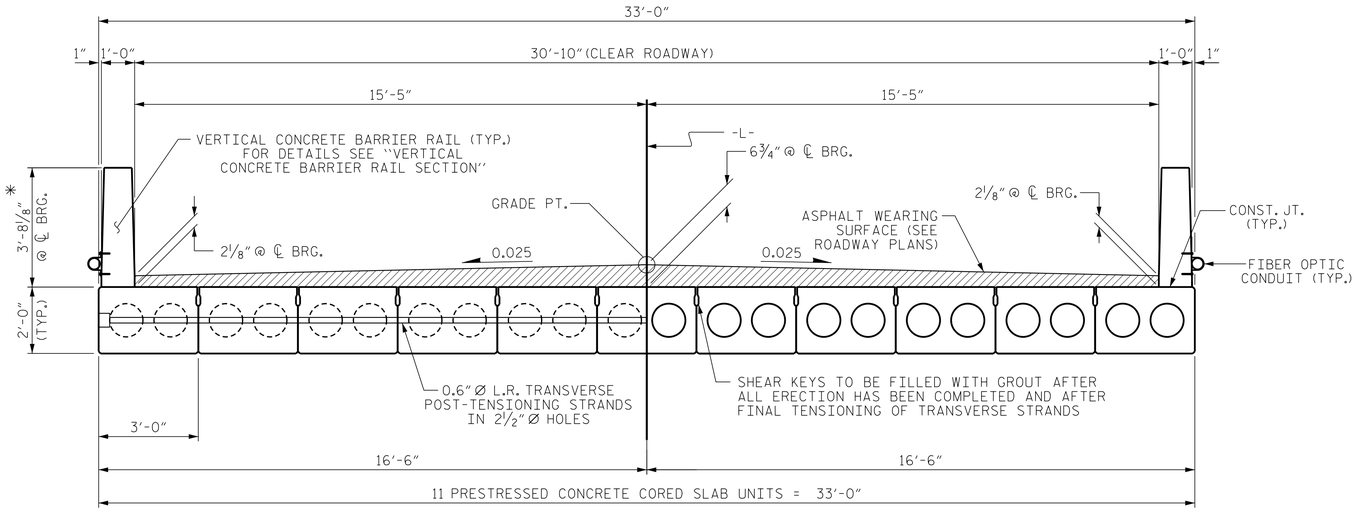

HALF SECTION
AT INTERMEDIATE DIAPHRAGMS

TYPICAL SECTION

HALF SECTION
THROUGH VOIDS

* - THE MAXIMUM BARRIER RAIL HEIGHT AND ASPHALT THICKNESS IS SHOWN. THE HEIGHT OF THE BARRIER RAIL AND ASPHALT THICKNESS VARIES WHILE THE TOP OF THE BARRIER RAIL FOLLOWS THE PROFILE OF THE GUTTERLINE. FOR RAIL HEIGHT DETAILS AND ASPHALT THICKNESS, SEE THE "VERTICAL CONCRETE BARRIER RAIL SECTION" DETAIL.

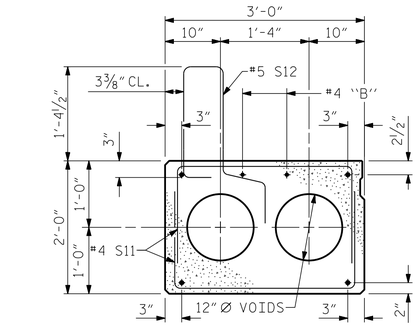

EXTERIOR SLAB SECTION

(FOR PRESTRESSED STRAND LAYOUT, SEE INTERIOR SLAB SECTION.)

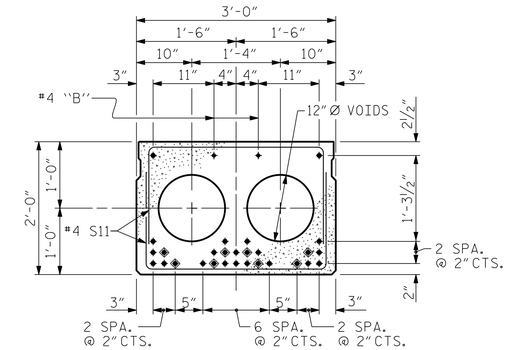

INTERIOR SLAB SECTION (70' UNIT)

(28 STRANDS REQUIRED)

0.6'' Ø LOW RELAXATION STRAND LAYOUT

◈ BOND SHALL BE BROKEN ON THESE STRANDS FOR A DISTANCE OF 12'-0" FROM END OF CORED SLAB UNIT. SEE STANDARD SPECIFICATIONS, ARTICLE 1078-7.

DEBONDING LEGEND

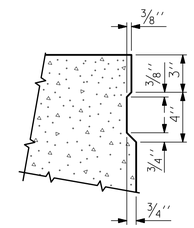

SHEAR KEY DETAIL

NOTE: OMIT SHEAR KEY ON OUTSIDE FACE OF EXTERIOR CORED SLABS.

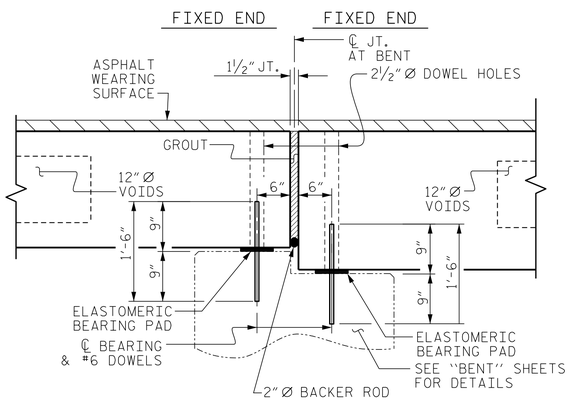

SECTION AT BENT

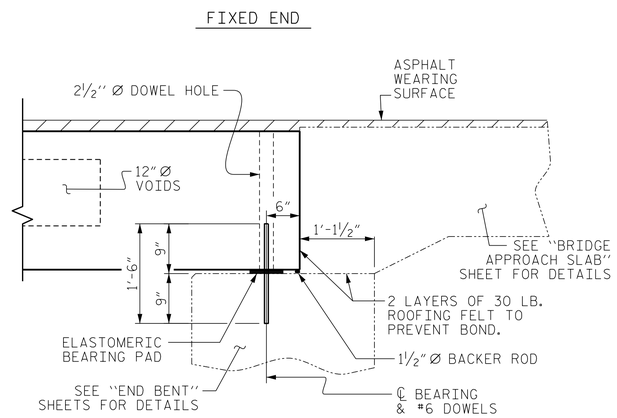

SECTION AT END BENT

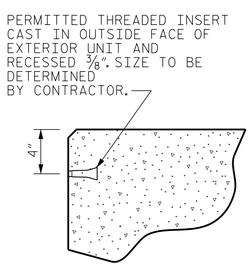

THREADED INSERT DETAIL

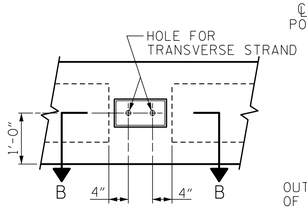

ELEVATION VIEW

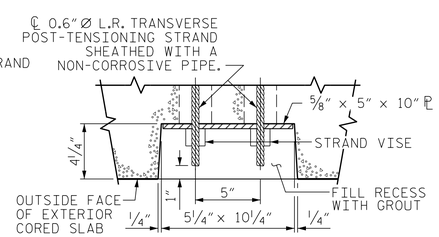

SECTION B-B

GROUTED RECESS AT END OF POST-TENSIONED STRAND CORED SLABS

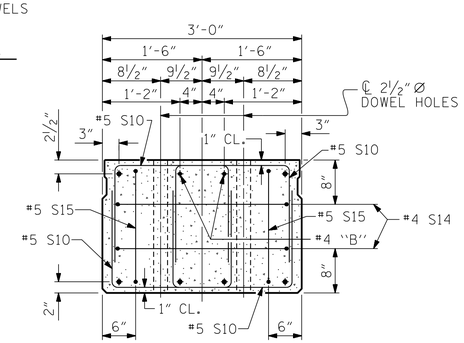

END ELEVATION

SHOWING PLACEMENT OF DOUBLE STIRRUPS AND LOCATION OF DOWEL HOLES. (STRAND LAYOUT NOT SHOWN.) INTERIOR SLAB UNIT SHOWN-EXTERIOR SLAB UNIT SIMILAR EXCEPT SHEAR KEY LOCATION.

PROJECT NO. B-6002
EDGECOMBE COUNTY
STATION: 15+47.50 -L-

SHEET 1 OF 3

ENGINEER OF RECORD
12/11/2019
NORTH CAROLINA PROFESSIONAL SEAL 22072 ENGINEER JOHN ARTHUR DILWORTH
Docusigned by: John Arthur Dilworth
WETHERILL ENGINEERING
1223 Jones Franklin Rd.
Raleigh, N.C. 27606
Bus: 919 851 8077
Fax: 919 851 8107
LICENSE NO. F-0377

STATE OF NORTH CAROLINA
DEPARTMENT OF TRANSPORTATION
RALEIGH

STANDARD
3'-0'' X 2'-0''
PRESTRESSED CONCRETE CORED SLAB UNIT
(SPAN B)

REVISIONS							SHEET NO.
NO.	BY:	DATE:	NO.	BY:	DATE:		S-8
1			3				TOTAL SHEETS
2			4				19

DOCUMENT NOT CONSIDERED FINAL UNLESS ALL SIGNATURES COMPLETED

ASSEMBLED BY : J. PENDERGRAFT	DATE : 9-18		
CHECKED BY : J. DILWORTH	DATE : 9-18		
DRAWN BY : MAA 6/10	REV. 9/14	MAA/TMG	
CHECKED BY : MKT 7/10			

P:\2018\18133.01_EDGECOMBE_64\Structures\DGN\EDGECOMBE 64 _SMU_TS.dgn
12/10/2019 2:46:30 PM

STD. NO. 24PCS4_33_90S

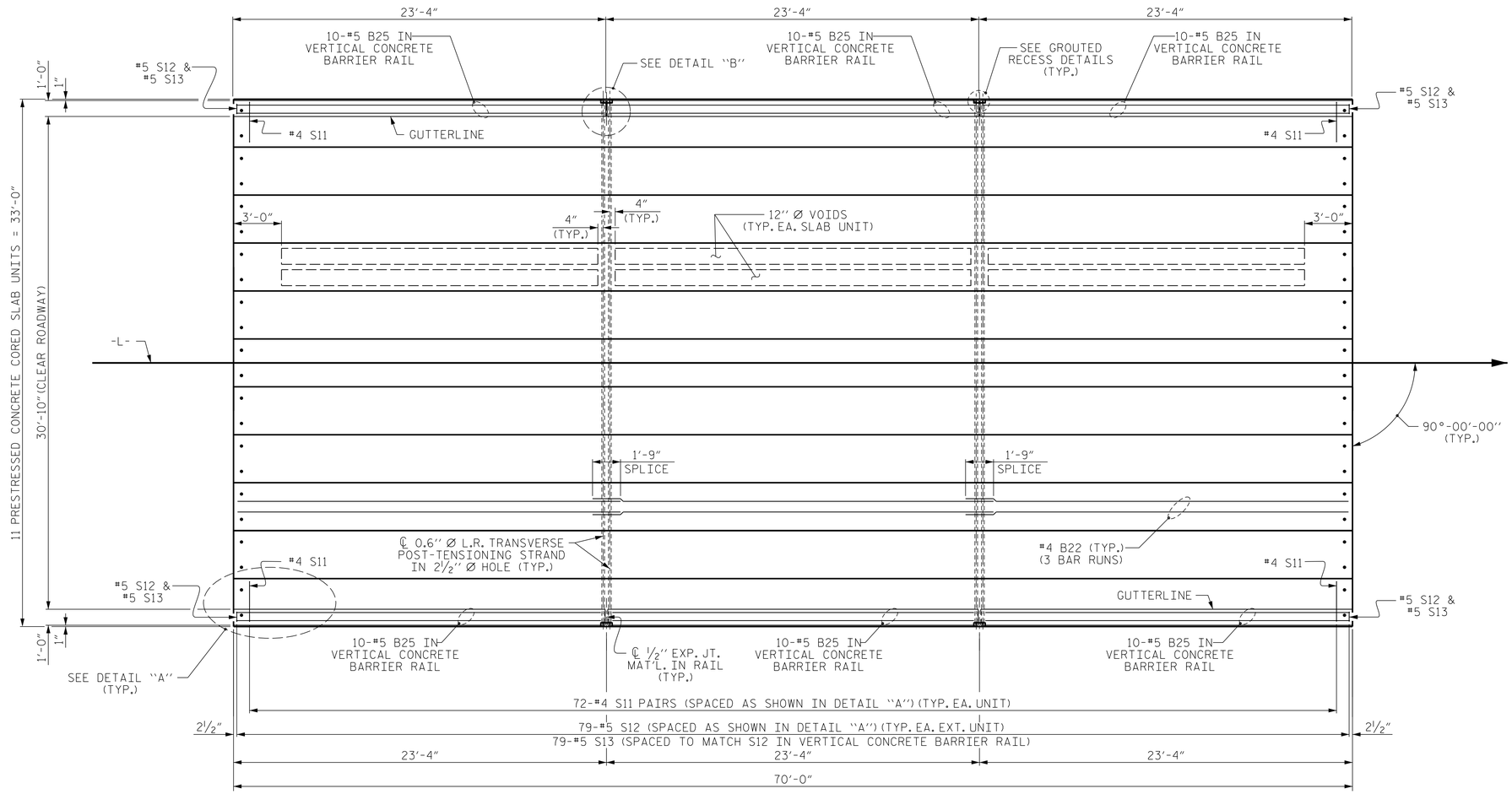

PLAN OF UNIT

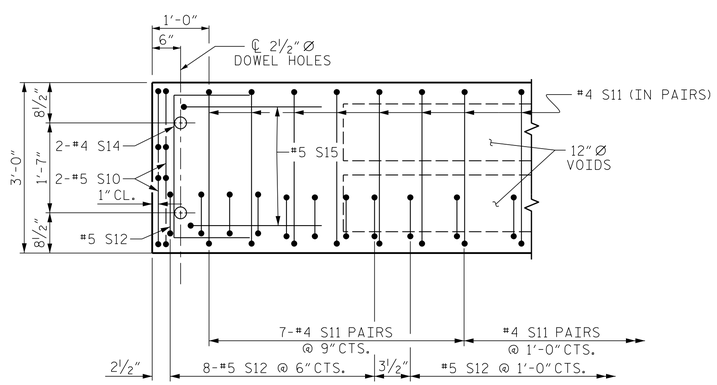

DETAIL "A"

(TYPICAL EACH END OF UNIT)
NOTE: EXTERIOR UNIT SHOWN - INTERIOR UNIT SIMILAR EXCEPT OMIT #5 S12 BARS.

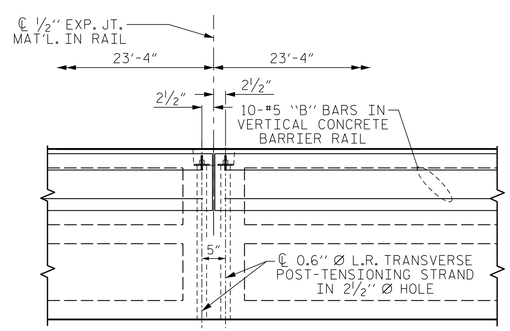

DETAIL "B"

#4 S11 BARS MAY BE SHIFTED AS NECESSARY TO MAINTAIN 1" CLEAR TO GROUTED RECESS AND 2½" Ø TRANSVERSE POST-TENSIONING STRAND HOLES

ASSEMBLED BY : J. PENDERGRAFT	DATE : 9-18		
CHECKED BY : J. DILWORTH	DATE : 9-18		
DRAWN BY : MAA	6/10	REV. 12/5/11	MAA/AAC
CHECKED BY : MKT	7/10	REV. 8/14	MAA/TMG

DOCUMENT NOT CONSIDERED FINAL UNLESS ALL SIGNATURES COMPLETED

ENGINEER OF RECORD
12/11/2019
NORTH CAROLINA PROFESSIONAL SEAL 22072 ENGINEER JOHN ARTHUR DILWORTH
Docusigned by: John Arthur Dilworth
E21D2C...
WETHERILL ENGINEERING
1223 Jones Franklin Rd.
Raleigh, N.C. 27606
Bus: 919 851 8077
Fax: 919 851 8107
LICENSE NO. F-0377

PROJECT NO. B-6002
EDGECOMBE COUNTY
STATION: 15+47.50 -L-

SHEET 2 OF 3

STATE OF NORTH CAROLINA
DEPARTMENT OF TRANSPORTATION
RALEIGH

PLAN OF 70' UNIT 30'-10" CLEAR ROADWAY 90° SKEW (SPAN B)

REVISIONS							SHEET NO.
NO.	BY:	DATE:	NO.	BY:	DATE:		S-9
1			3				TOTAL SHEETS
2			4				19

STD. NO. 24PCS_33_90S_70L

P:\2018\18133.01_EDGECOMBE_64\Structures\DGN\EDGDECOMBE 64 _SMU_PS.dgn
12/10/2019 2:47:03 PM

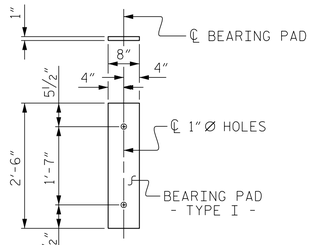

FIXED END
(TYPE I - 22 REQ'D)

ELASTOMERIC BEARING DETAILS

ELASTOMER IN ALL BEARINGS SHALL BE 60 DUROMETER HARDNESS.

BILL OF MATERIAL FOR ONE 70' CORED SLAB UNIT

BAR	NUMBER	SIZE	TYPE	EXTERIOR UNIT LENGTH	EXTERIOR UNIT WEIGHT	INTERIOR UNIT LENGTH	INTERIOR UNIT WEIGHT
B22	6	#4	STR	24'-6"	98	24'-6"	98
S10	8	#5	3	4'-9"	40	4'-9"	40
S11	144	#4	3	5'-10"	561	5'-10"	561
✳S12	79	#5	1	5'-7"	460		
S14	4	#4	3	5'-7"	15	5'-7"	15
S15	4	#5	3	7'-1"	30	7'-1"	30
REINFORCING STEEL			LBS.		744		744
✳EPOXY COATED REINFORCING STEEL			LBS.		460		
7000 P.S.I. CONCRETE			CU. YDS.		11.8		11.8
0.6"Ø L.R. STRANDS			No.		28		28

BILL OF MATERIAL FOR VERTICAL CONCRETE BARRIER RAIL

BAR	BARS PER PAIR OF EXTERIOR UNITS	TOTAL NO.	SIZE	TYPE	LENGTH	WEIGHT
	70' UNIT					
✳B25	60	60	#5	STR	22'-11"	1434
✳S13	158	158	#5	2	7'-2"	1181
✳EPOXY COATED REINFORCING STEEL				LBS.		2615
CLASS AA CONCRETE				CU.YDS.		18.1
TOTAL VERTICAL CONCRETE BARRIER RAIL				LN. FT.		140.25

CORED SLABS REQUIRED

	NUMBER	LENGTH	TOTAL LENGTH
70' UNIT			
EXTERIOR C.S.	2	70'-0"	140'-0"
INTERIOR C.S.	9	70'-0"	630'-0"
TOTAL			770'-0"

GRADE 270 STRANDS

	0.6"Ø L.R.
AREA (SQUARE INCHES)	0.217
ULTIMATE STRENGTH (LBS. PER STRAND)	58,600
APPLIED PRESTRESS (LBS. PER STRAND)	43,950

DEAD LOAD DEFLECTION AND CAMBER

	3'-0" x 2'-0"
70' CORED SLAB UNIT	0.6"Ø L.R. STRAND
CAMBER (SLAB ALONE IN PLACE)	2¼" ↑
DEFLECTION DUE TO SUPERIMPOSED DEAD LOAD✳✳	¾" ↓
FINAL CAMBER	1½" ↑

✳✳ INCLUDES FUTURE WEARING SURFACE

CONCRETE RELEASE STRENGTH

UNIT	PSI
70' UNITS	5500

BAR TYPES

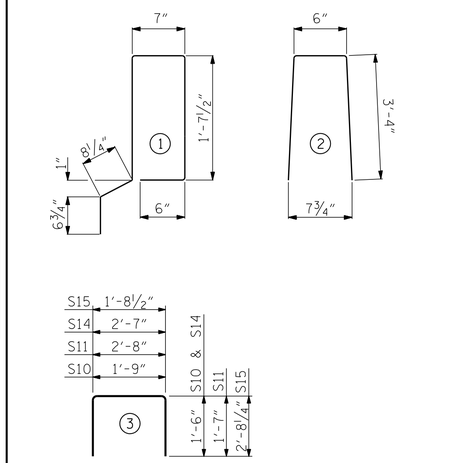

ALL BAR DIMENSIONS ARE OUT TO OUT

NOTES

ALL PRESTRESSING STRANDS SHALL BE 7-WIRE LOW RELAXATION GRADE 270 STRANDS AND SHALL CONFORM TO AASHTO M203 EXCEPT FOR SAMPLING REQUIREMENTS WHICH SHALL BE IN ACCORDANCE WITH THE STANDARD SPECIFICATIONS.

ALL REINFORCING STEEL CAST WITH THE CORED SLAB SECTIONS SHALL BE GRADE 60 AND SHALL BE INCLUDED IN THE UNIT PRICE BID FOR PRESTRESSED CONCRETE CORED SLABS.

RECESSES FOR TRANSVERSE STRANDS SHALL BE GROUTED AFTER THE TENSIONING OF THE STRANDS.

THE 2½"Ø DOWEL HOLES AT FIXED ENDS OF SLAB SECTIONS SHALL BE FILLED WITH NON-SHRINK GROUT.

THE BACKER RODS SHALL CONFORM TO THE REQUIREMENTS OF TYPE M BOND BREAKER. SEE SECTION 1028 OF THE STANDARD SPECIFICATIONS.

WHEN CORED SLABS ARE CAST, AN INTERNAL HOLD-DOWN SYSTEM SHALL BE EMPLOYED TO PREVENT VOIDS FROM RISING OR MOVING SIDEWAYS. AT LEAST SIX WEEKS PRIOR TO CASTING CORED SLABS, THE CONTRACTOR SHALL SUBMIT TO THE ENGINEER FOR REVIEW AND COMMENT, DETAILED DRAWINGS OF THE PROPOSED HOLD-DOWN SYSTEM. IN ADDITION TO STRUCTURAL DETAILS, LOCATION AND SPACING OF THE HOLD-DOWNS SHALL BE INDICATED.

THE TRANSFER OF LOAD FROM THE ANCHORAGES TO THE CORED SLAB UNIT SHALL BE DONE WHEN THE CONCRETE HAS REACHED A COMPRESSIVE STRENGTH OF NOT LESS THAN THE REQUIRED STRENGTH SHOWN IN THE "CONCRETE RELEASE STRENGTH" TABLE.

ALL REINFORCING STEEL IN VERTICAL CONCRETE BARRIER RAILS SHALL BE EPOXY COATED.

PRESTRESSING STRANDS SHALL BE CUT FLUSH WITH THE CORED SLAB UNIT ENDS.

APPLY EPOXY PROTECTIVE COATING TO CORED SLAB UNIT ENDS.

GROOVED CONTRACTION JOINTS, ½" IN DEPTH, SHALL BE TOOLED IN ALL EXPOSED FACES OF THE BARRIER RAIL AND IN ACCORDANCE WITH ARTICLE 825-10(B) OF THE STANDARD SPECIFICATIONS. A CONTRACTION JOINT SHALL BE LOCATED AT EACH THIRD POINT BETWEEN BARRIER RAIL EXPANSION JOINTS. ONLY ONE CONTRACTION JOINT IS REQUIRED AT MIDPOINT OF BARRIER RAIL SEGMENTS LESS THAN 20 FEET IN LENGTH AND NO CONTRACTION JOINTS ARE REQUIRED FOR THOSE SEGMENTS LESS THAN 10 FEET IN LENGTH.

FLAME CUTTING OF THE TRANSVERSE POST-TENSIONING STRAND IS NOT ALLOWED.

MAINTAIN A SYMMETRIC TENSION FORCE BETWEEN EACH PAIR OF TRANSVERSE POST TENSIONING STRANDS IN THE DIAPHRAGM.

THE #4 S11 STIRRUPS MAY BE SHIFTED AS NECESSARY TO MAINTAIN 1" CLEAR TO THE GROUTED RECESS.

FOR GROUT FOR STRUCTURES, SEE SPECIAL PROVISIONS.

THE PERMITTED THREADED INSERTS ARE DETAILED AS AN OPTION FOR THE CONTRACTOR TO ATTACH FALSEWORK AND FORMWORK DURING CONSTRUCTION.

THE PERMITTED THREADED INSERTS IN THE EXTERIOR UNITS SHALL BE SIZED BY THE CONTRACTOR, SPACED AT 4'-0" CENTERS AND GALVANIZED IN ACCORDANCE WITH SECTION 1076 OF THE STANDARD SPECIFICATIONS. STAINLESS STEEL THREADED INSERTS MAY BE USED AS AN ALTERNATE.

THE PERMITTED THREADED INSERTS SHALL BE GROUTED BY THE CONTRACTOR IMMEDIATELY FOLLOWING REMOVAL OF THE FALSEWORK.

THE COST OF THE PERMITTED THREADED INSERTS SHALL BE INCLUDED IN THE PRICE BID FOR THE PRECAST UNITS.

GUTTERLINE ASPHALT THICKNESS & RAIL HEIGHT

	ASPHALT OVERLAY THICKNESS @ MID-SPAN	RAIL HEIGHT @ MID-SPAN
70' UNITS	1¾"	3'-7¾"

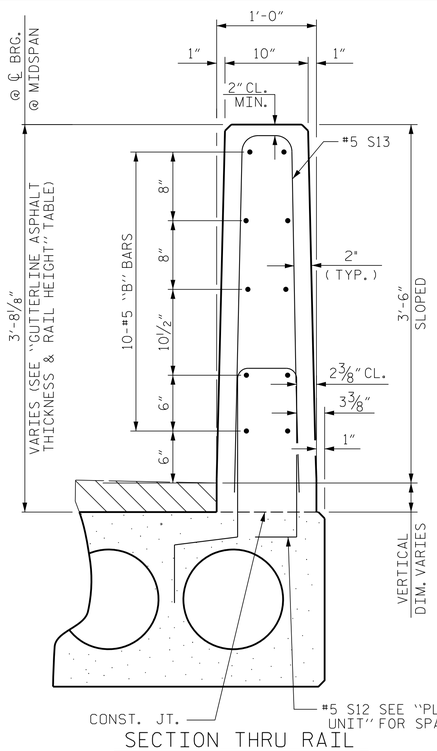

SECTION THRU RAIL

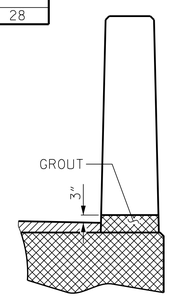

SECTION T-T
AT OPEN JOINT AT BENT
(THIS IS TO BE USED WHERE FOAM JOINT IS NOT USED)

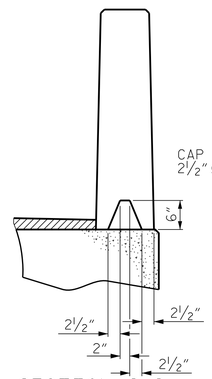

SECTION S-S
AT DAM IN OPEN JOINT
(THIS IS TO BE USED ONLY WHEN SLIP FORM IS USED)

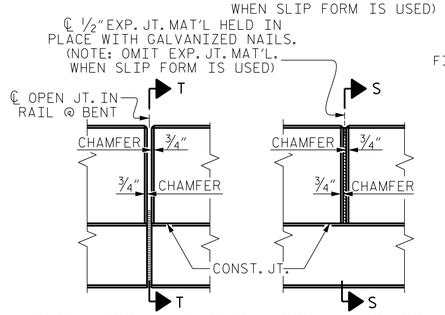

ELEVATION AT EXPANSION JOINTS

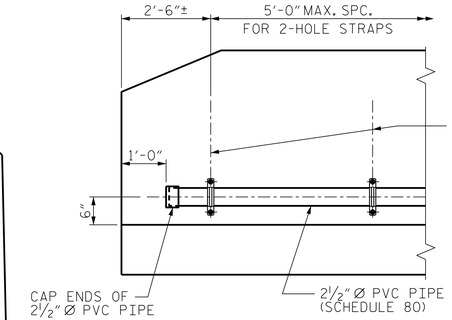

ELEVATION

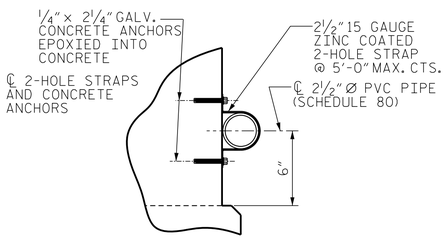

SECTION

FIBER OPTIC CONDUIT SYSTEM DETAILS

2½"Ø SCHEDULE 80 PVC PIPE ATTACHED TO THE BACK OF BOTH RAILS FOR FUTURE FIBER OPTIC CABLE.

FIBER OPTIC CONDUIT SYSTEM 138.25 LIN. FT.

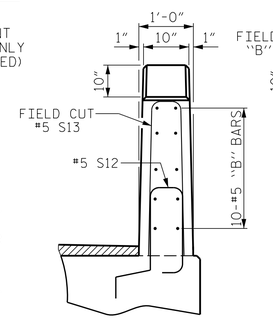

END VIEW

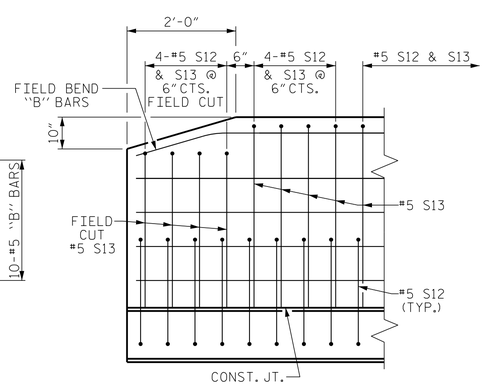

SIDE VIEW

END OF RAIL DETAILS

VERTICAL CONCRETE BARRIER RAIL DETAILS

PROJECT NO. B-6002
EDGECOMBE COUNTY
STATION: 15+47.50 -L-

SHEET 3 OF 3

ENGINEER OF RECORD
12/11/2019
NORTH CAROLINA PROFESSIONAL SEAL 22072 ENGINEER JOHN ARTHUR DILWORTH
DocuSigned by: John Arthur Dilworth
WETHERILL ENGINEERING
1223 Jones Franklin Rd.
Raleigh, N.C. 27606
Bus: 919 851 8077
Fax: 919 851 8107
LICENSE NO. F-0377

STATE OF NORTH CAROLINA
DEPARTMENT OF TRANSPORTATION
RALEIGH

STANDARD
3'-0" X 2'-0"
PRESTRESSED CONCRETE
CORED SLAB UNIT
(SPAN B)

REVISIONS						SHEET NO.
NO.	BY:	DATE:	NO.	BY:	DATE:	S-10
1			3			TOTAL SHEETS
2			4			19

STD. NO. 24PCS3_33_90S

ASSEMBLED BY : J. PENDERGRAFT	DATE : 9-18		
CHECKED BY : J. DILWORTH	DATE : 9-18		
DRAWN BY : MAA 6/10	REV. 5/18	MAA/THC	
CHECKED BY : MKT 7/10			

DOCUMENT NOT CONSIDERED FINAL UNLESS ALL SIGNATURES COMPLETED

P:\2018\18133.01_EDGECOMBE_64\Structures\DGN\EDGEDECOMBE 64 _SMU_CS.dgn
12/10/2019 2:47:43 PM

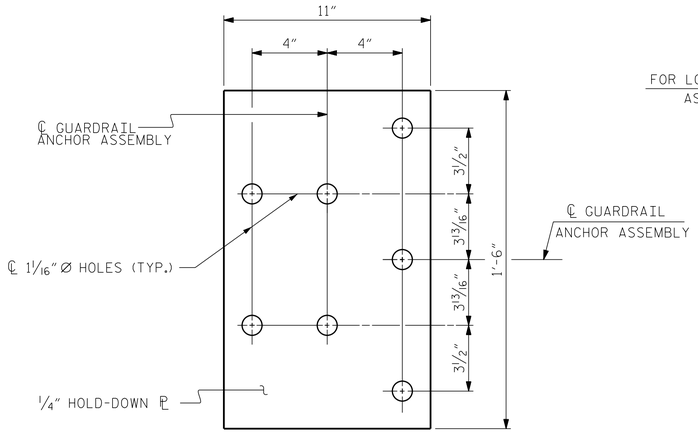

PLAN

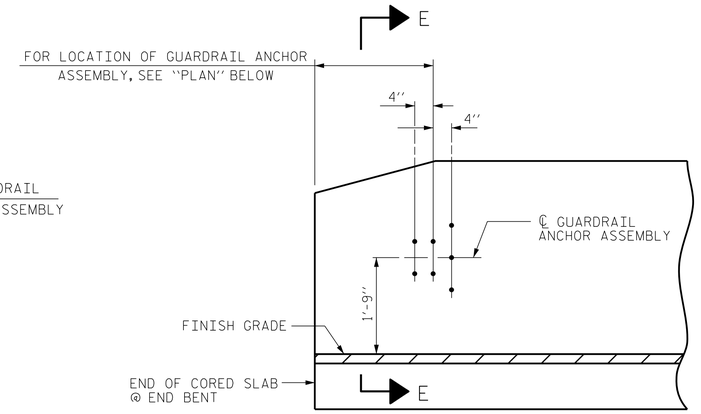

ELEVATION

NOTES

THE GUARDRAIL ANCHOR ASSEMBLY SHALL CONSIST OF A 1/4" HOLD DOWN PLATE AND 7 - 7/8" Ø BOLTS WITH NUTS AND WASHERS.

THE HOLD-DOWN PLATE SHALL CONFORM TO AASHTO M270 GRADE 36. AFTER FABRICATION, THE HOLD-DOWN PLATE SHALL BE HOT-DIP GALVANIZED IN ACCORDANCE WITH AASHTO M111.

BOLTS SHALL CONFORM TO THE REQUIREMENTS OF ASTM A307 AND NUTS SHALL CONFORM TO THE REQUIREMENTS OF AASHTO M291. BOLTS, NUTS AND WASHERS SHALL BE GALVANIZED. (AT THE CONTRACTOR'S OPTION, STAINLESS STEEL BOLTS, NUTS AND WASHERS MAY BE USED AS AN ALTERNATE FOR THE 7/8" Ø GALVANIZED BOLTS, NUTS AND WASHERS. THEY SHALL CONFORM TO OR EXCEED THE MECHANICAL REQUIREMENTS OF ASTM A307. THE USE OF THIS ALTERNATE SHALL BE APPROVED BY THE ENGINEER.)

THE GUARDRAIL ANCHOR ASSEMBLY IS REQUIRED AT ALL POINTS WHERE APPROACH GUARDRAIL IS TO BE ATTACHED TO THE END OF BARRIER RAIL. FOR POINTS OF ATTACHMENT, SEE SKETCH.

AFTER INSTALLATION, THE EXPOSED THREAD OF THE BOLT SHALL BE BURRED WITH A SHARP POINTED TOOL.

THE COST OF THE GUARDRAIL ANCHOR ASSEMBLY SHALL BE INCLUDED IN THE UNIT CONTRACT PRICE BID FOR VERTICAL CONCRETE BARRIER RAIL.

THE VERTICAL REINFORCING BARS MAY BE SHIFTED SLIGHTLY IN THE VERTICAL CONCRETE BARRIER RAIL TO CLEAR ASSEMBLY BOLTS.

THE 1 1/4" Ø HOLES SHALL BE FORMED OR DRILLED WITH A CORE BIT. IMPACT TOOLS WILL NOT BE PERMITTED. ANY CONCRETE DAMAGED BY THIS WORK SHALL BE REPAIRED TO THE SATISFACTION OF THE ENGINEER.

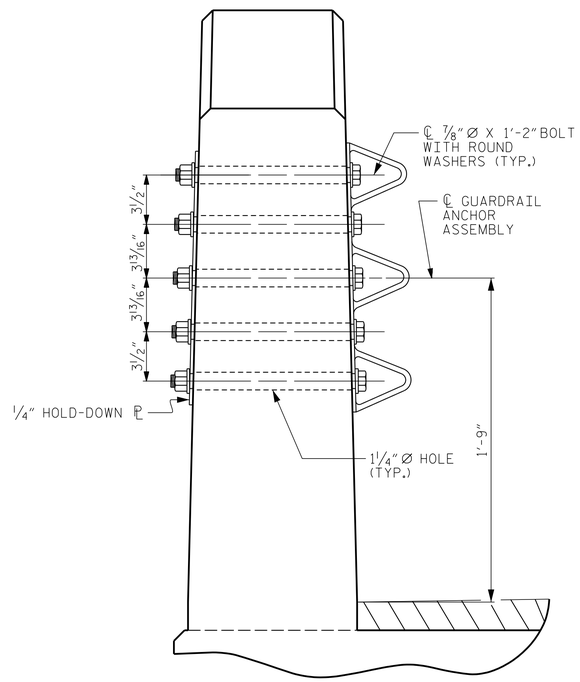

SECTION E-E

GUARDRAIL ANCHOR ASSEMBLY DETAILS

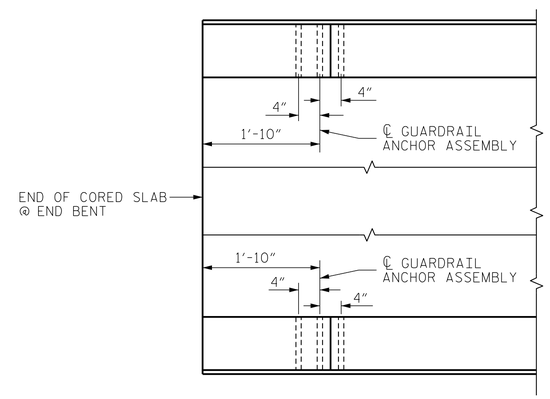

PLAN

LOCATION OF ANCHORS FOR GUARDRAIL

END BENT #1 SHOWN, END BENT #2 SIMILAR.

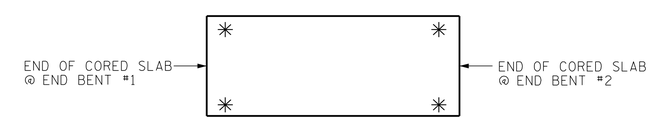

SKETCH SHOWING POINTS OF ATTACHMENT

✳ DENOTES GUARDRAIL ANCHOR ASSEMBLY

PROJECT NO. B-6002
EDGECOMBE COUNTY
STATION: 15+47.50 -L-

ASSEMBLED BY : J. PENDERGRAFT	DATE : 9/18
CHECKED BY : J. DILWORTH	DATE : 9/18
DRAWN BY : MAA 5/10	REV. 1/15 MAA/TMG
CHECKED BY : GM 5/10	REV. 12/17 MAA/THC
	REV. 5/18 MAA/THC

DOCUMENT NOT CONSIDERED FINAL UNLESS ALL SIGNATURES COMPLETED

ENGINEER OF RECORD
12/11/2019
NORTH CAROLINA PROFESSIONAL SEAL 22072 ENGINEER JOHN ARTHUR DILWORTH
Docusigned by: John Arthur Dilworth
WETHERILL ENGINEERING
1223 Jones Franklin Rd.
Raleigh, N.C. 27606
Bus: 919 851 8077
Fax: 919 851 8107
LICENSE NO. F-0377

STATE OF NORTH CAROLINA
DEPARTMENT OF TRANSPORTATION
RALEIGH

STANDARD
GUARDRAIL ANCHORAGE DETAILS FOR VERTICAL CONCRETE BARRIER RAIL

REVISIONS						SHEET NO.
NO.	BY:	DATE:	NO.	BY:	DATE:	S-11
1			3			TOTAL SHEETS
2			4			19

(SHT 1) STD. NO. GRA3

P:\2018\18133.01_EDGECOMBE_64\Structures\DGN\EDGECOMBE 64 _SMU_GRA.dgn
12/10/2019 2:48:23 PM

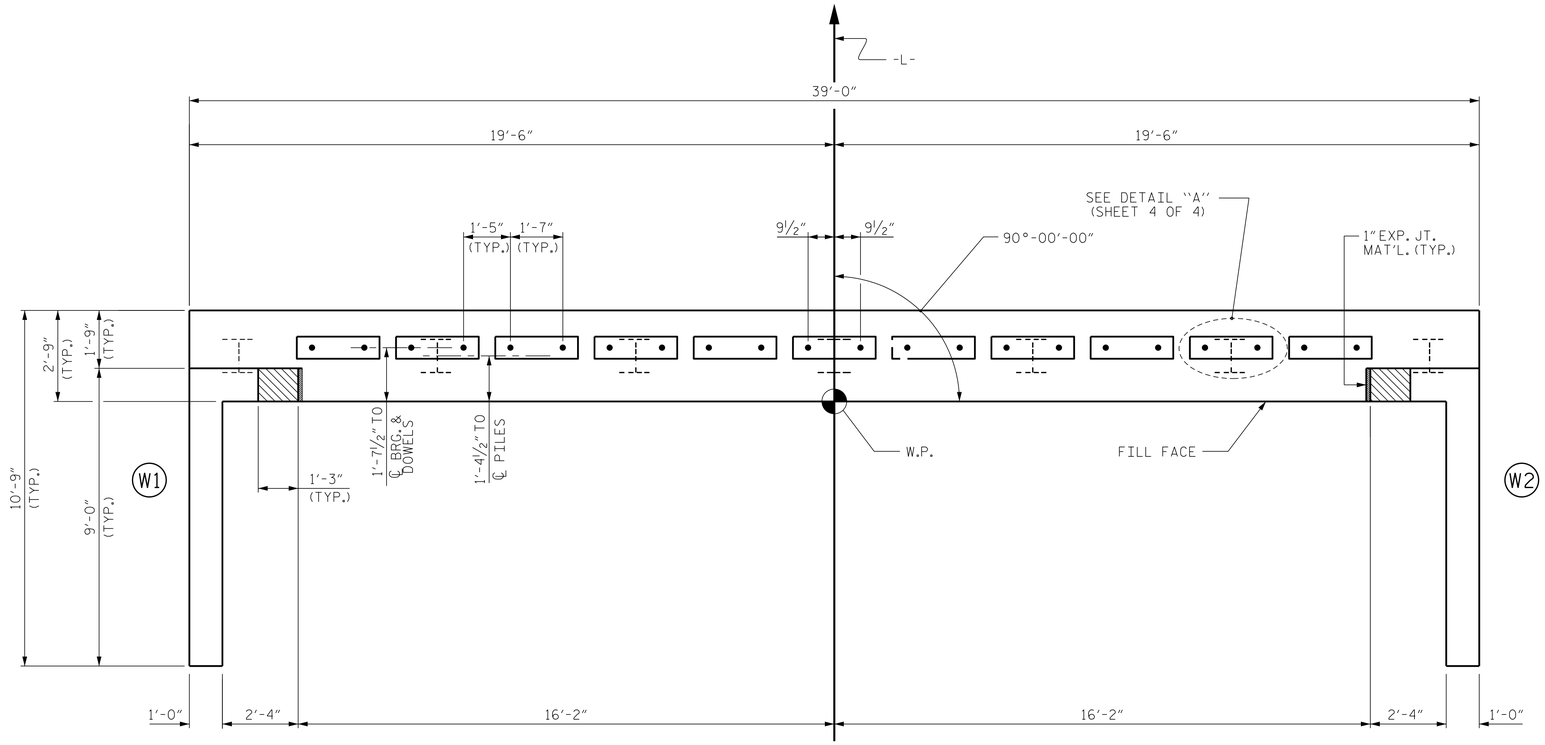

PLAN

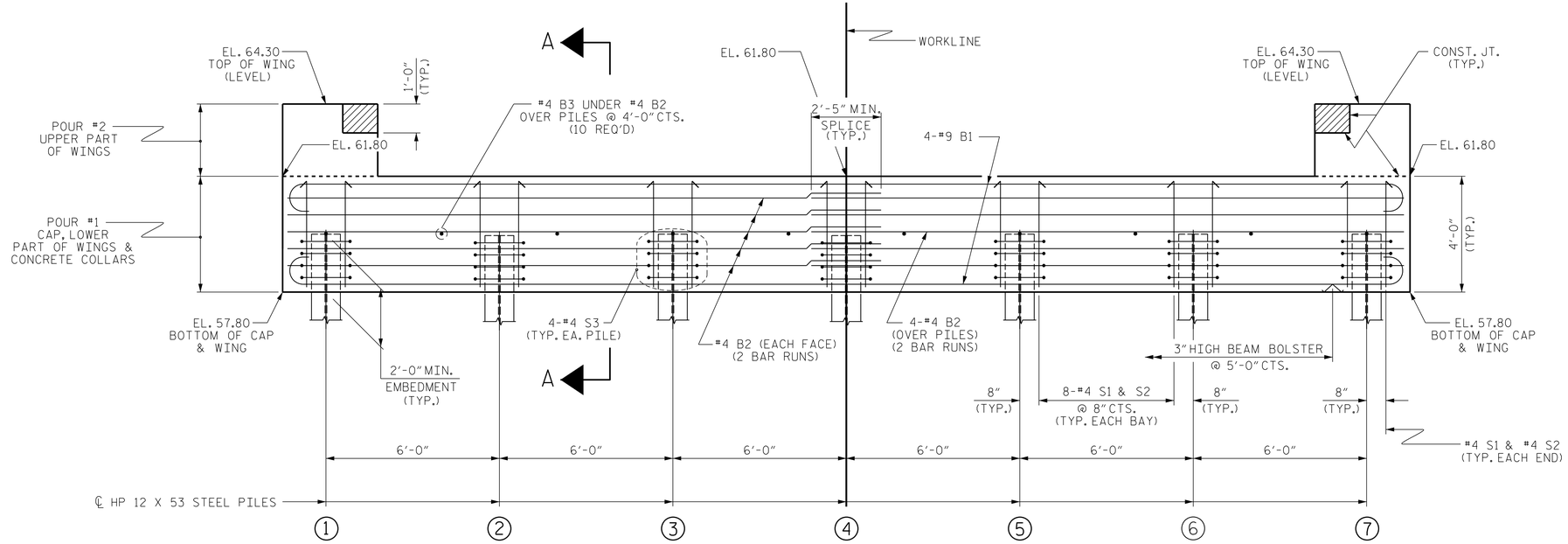

ELEVATION

WINGS NOT SHOWN FOR CLARITY.
FOR SECTION A-A, SEE SHEET 4 OF 4.
CONCRETE COLLARS FOR STEEL PILES NOT SHOWN IN PLAN AND ELEVATION VIEWS FOR CLARITY.
SEE "CORROSION PROTECTION FOR STEEL PILES DETAIL", SHEET 4 OF 4.

NOTES

STIRRUPS IN CAP MAY BE SHIFTED AS NECESSARY TO CLEAR DOWELS.

THE CONCRETE IN THE SHADED AREA OF THE WING SHALL BE POURED AFTER THE VERTICAL CONCRETE BARRIER RAIL IS CAST IF SLIP FORMING IS USED.

FOR PILE SPLICE DETAILS, SEE SHEET 4 OF 4.

FOR WING DETAILS, SEE SHEET 3 OF 4.

PROJECT NO. B-6002
EDGECOMBE COUNTY
STATION: 15+47.50 -L-

SHEET 1 OF 4

ASSEMBLED BY : J. PENDERGRAFT	DATE : 9-18
CHECKED BY : J. DILWORTH	DATE : 9-18
DRAWN BY : WJH 12/11	REV. 4/15 MAA/TMG
CHECKED BY : AAC 12/11	

DOCUMENT NOT CONSIDERED FINAL UNLESS ALL SIGNATURES COMPLETED

ENGINEER OF RECORD
12/11/2019
NORTH CAROLINA PROFESSIONAL SEAL 22072 ENGINEER JOHN ARTHUR DILWORTH
Docusigned by: John Arthur Dilworth
WETHERILL ENGINEERING
1223 Jones Franklin Rd.
Raleigh, N.C. 27606
Bus: 919 851 8077
Fax: 919 851 8107
LICENSE NO. F-0377

STATE OF NORTH CAROLINA
DEPARTMENT OF TRANSPORTATION
RALEIGH

SUBSTRUCTURE

END BENT No. 1

REVISIONS						SHEET NO.
NO.	BY:	DATE:	NO.	BY:	DATE:	S-12
1			3			TOTAL SHEETS
2			4			19

STD. NO. EB_33_90S4

P:\2018\18133.01_EDGECOMBE_6A\Structures\DGN\EDGDECOMBE 64 _SMU_EB.dgn
12/10/2019 2:49:00 PM

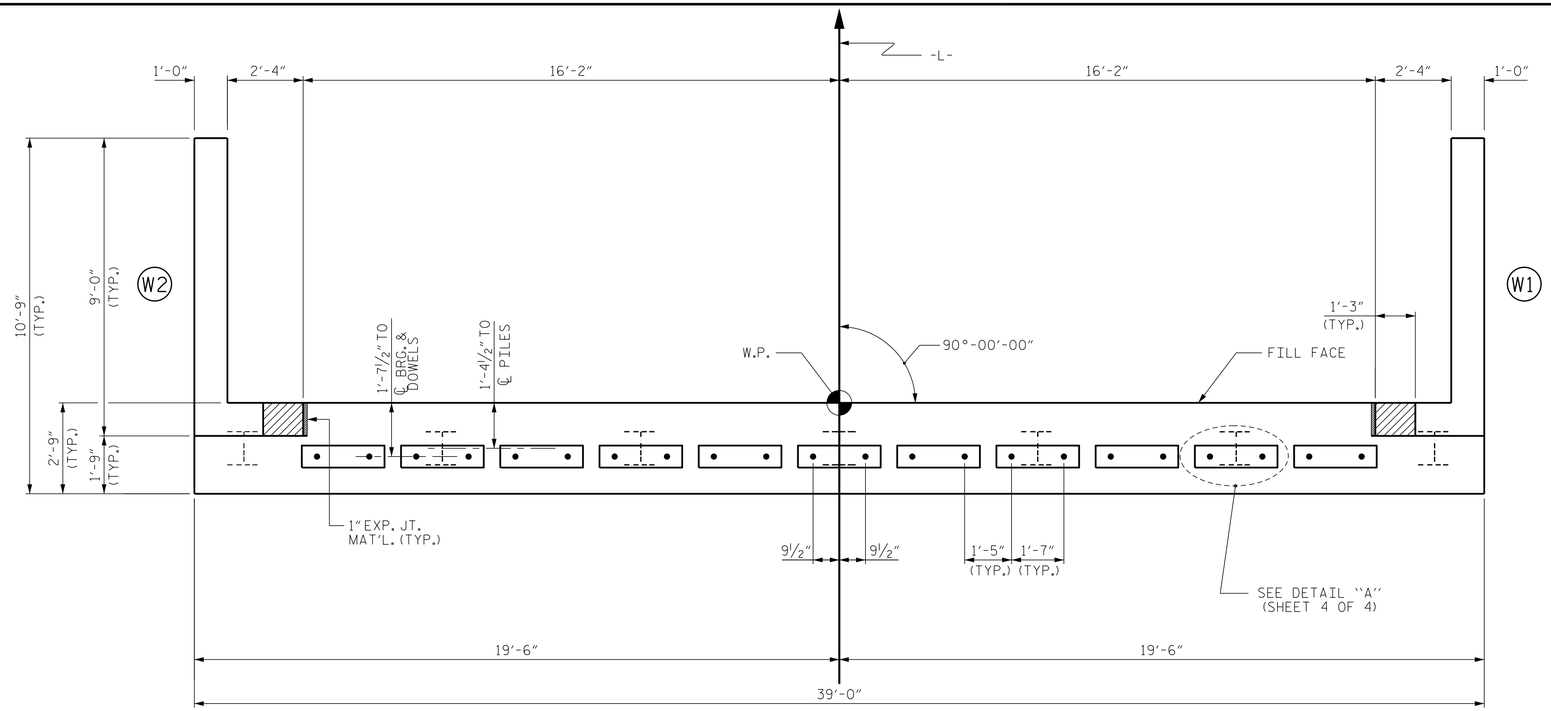

PLAN

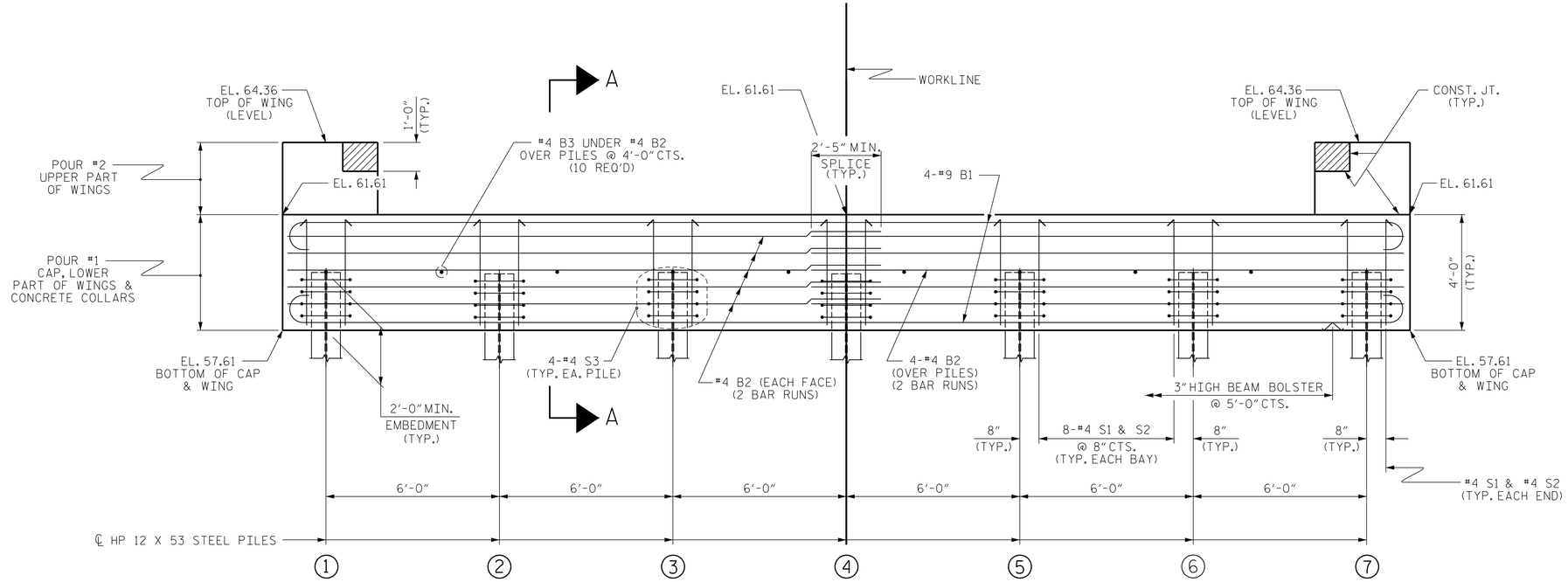

ELEVATION

WINGS NOT SHOWN FOR CLARITY.
FOR SECTION A-A, SEE SHEET 4 OF 4.
CONCRETE COLLARS FOR STEEL PILES NOT SHOWN IN PLAN AND ELEVATION VIEWS FOR CLARITY.
SEE "CORROSION PROTECTION FOR STEEL PILES DETAIL", SHEET 4 OF 4.

NOTES

STIRRUPS IN CAP MAY BE SHIFTED AS NECESSARY TO CLEAR DOWELS.

THE CONCRETE IN THE SHADED AREA OF THE WING SHALL BE POURED AFTER THE VERTICAL CONCRETE BARRIER RAIL IS CAST IF SLIP FORMING IS USED.

FOR PILE SPLICE DETAILS, SEE SHEET 4 OF 4.

FOR WING DETAILS, SEE SHEET 3 OF 4.

PROJECT NO. B-6002
EDGECOMBE COUNTY
STATION: 15+47.50 -L-

SHEET 2 OF 4

ASSEMBLED BY : J. PENDERGRAFT	DATE : 9-18		
CHECKED BY : J. DILWORTH	DATE : 9-18		
DRAWN BY : WJH 12/11	REV. 4/15	MAA/TMG	
CHECKED BY : AAC 12/11			

P:\2018\18133.01_EDGECOMBE_6A\Structures\DGN\EDGDECOMBE 64 _SMU_EB.dgn
12/10/2019 2:49:23 PM

DOCUMENT NOT CONSIDERED FINAL UNLESS ALL SIGNATURES COMPLETED

ENGINEER OF RECORD
12/11/2019
NORTH CAROLINA PROFESSIONAL SEAL 22072 ENGINEER JOHN ARTHUR DILWORTH
DocuSigned by: John Arthur Dilworth
WETHERILL ENGINEERING
1223 Jones Franklin Rd.
Raleigh, N.C. 27606
Bus: 919 851 8077
Fax: 919 851 8107
LICENSE NO. F-0377

STATE OF NORTH CAROLINA
DEPARTMENT OF TRANSPORTATION
RALEIGH

SUBSTRUCTURE

END BENT No. 2

REVISIONS								SHEET NO.
NO.	BY:	DATE:	NO.	BY:	DATE:			S-13
1			3					TOTAL SHEETS
2			4					19

STD. NO. EB_33_90S4

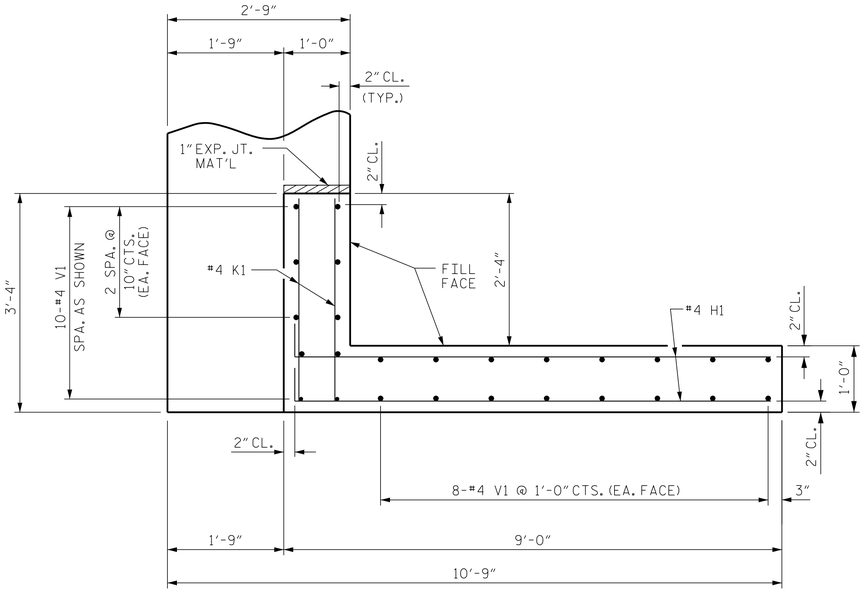

PLAN OF WING (W1)

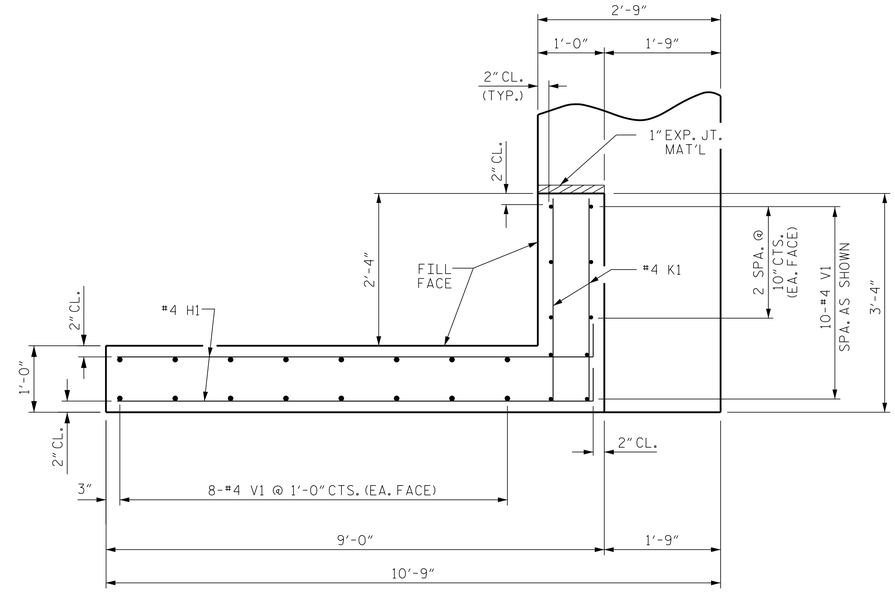

PLAN OF WING (W2)

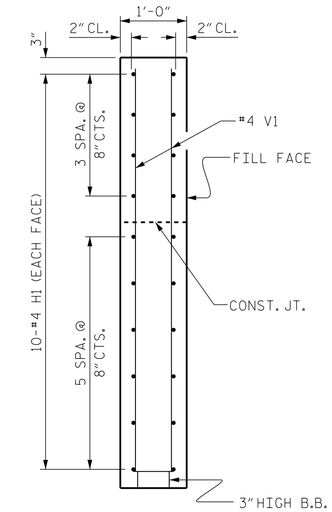

SECTION X-X

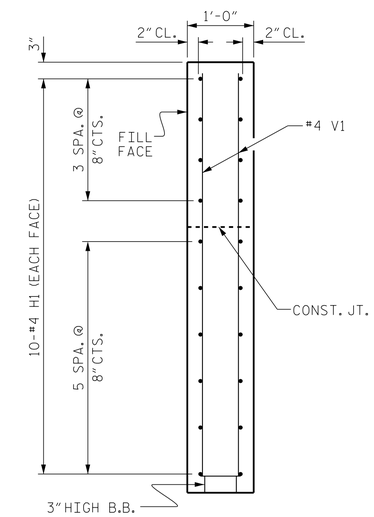

SECTION Y-Y

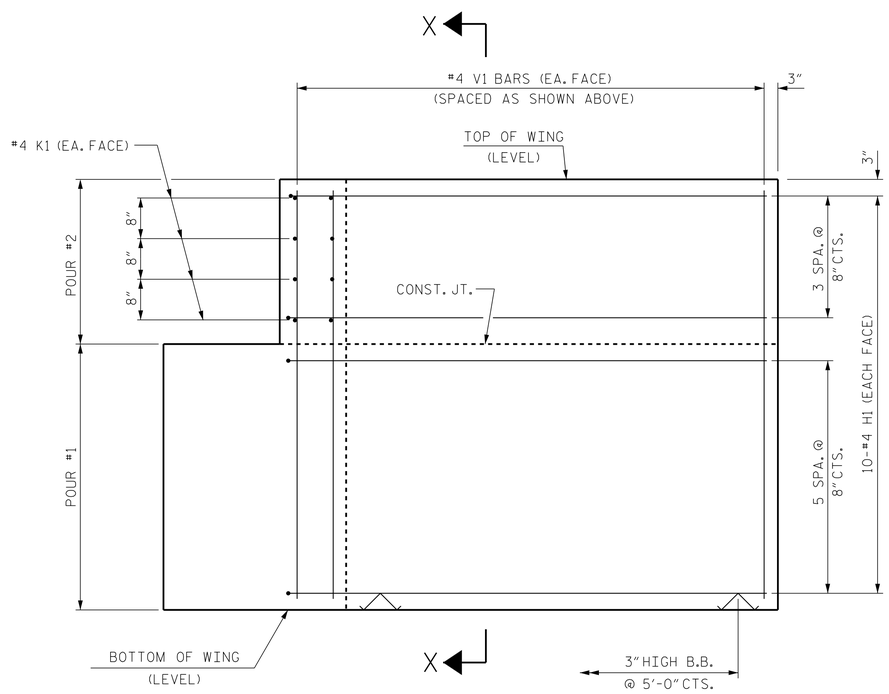

ELEVATION OF WING (W1)

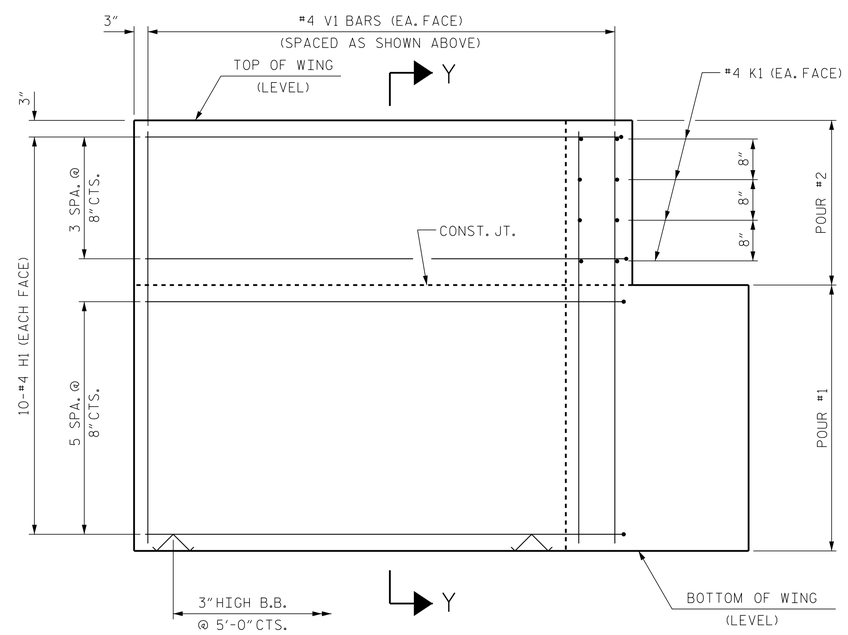

ELEVATION OF WING (W2)

WING DETAILS

PROJECT NO. B-6002

EDGECOMBE COUNTY

STATION: 15+47.50 -L-

SHEET 3 OF 4

ENGINEER OF RECORD
12/11/2019

NORTH CAROLINA PROFESSIONAL SEAL 22072 ENGINEER JOHN ARTHUR DILWORTH

Docusigned by: John Arthur Dilworth
6213B0

ETHERILL ENGINEERING
1223 Jones Franklin Rd.
Raleigh, N.C. 27606
Bus: 919 851 8077
Fax: 919 851 8107
LICENSE NO. F-0377

STATE OF NORTH CAROLINA
DEPARTMENT OF TRANSPORTATION
RALEIGH

SUBSTRUCTURE

END BENT
WING DETAILS

REVISIONS						SHEET NO.
NO.	BY:	DATE:	NO.	BY:	DATE:	S-14
1			3			TOTAL SHEETS
2			4			19

ASSEMBLED BY : J. PENDERGRAFT DATE : 9-18
CHECKED BY : J. DILWORTH DATE : 9-18
DRAWN BY : WJH 12/11
CHECKED BY : AAC 12/11
REV. 4/15 MAA/TMG

DOCUMENT NOT CONSIDERED FINAL UNLESS ALL SIGNATURES COMPLETED

P:\2018\18133.01_EDGECOMBE_64\Structures\DGN\EDGECOMBE 64 _SWU_EB.dgn
12/10/2019 2:49:42 PM

STD. NO. EB_33_90S4

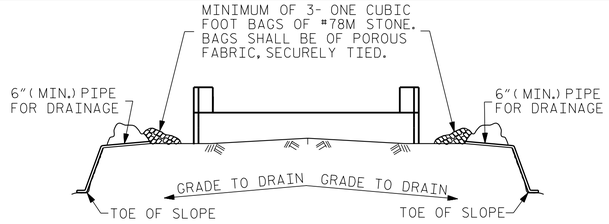

BAGGED STONE AND PIPE SHALL BE PLACED IMMEDIATELY AFTER COMPLETION OF END BENT EXCAVATION. PIPE MAY BE EITHER CONCRETE, CORRUGATED STEEL, CORRUGATED ALUMINUM ALLOY, OR CORRUGATED PLASTIC. PERFORATED PIPE WILL NOT BE ALLOWED.

BAGGED STONE SHALL REMAIN IN PLACE UNTIL THE ENGINEER DIRECTS THAT IT BE REMOVED. THE CONTRACTOR SHALL REMOVE AND DISPOSE OF SILT ACCUMULATIONS AT BAGGED STONE WHEN SO DIRECTED BY THE ENGINEER. BAGS SHALL BE REMOVED AND REPLACED WHENEVER THE ENGINEER DETERMINES THAT THEY HAVE DETERIORATED AND LOST THEIR EFFECTIVENESS.

NO SEPARATE PAYMENT WILL BE MADE FOR THIS WORK AND THE ENTIRE COST OF THIS WORK SHALL BE INCLUDED IN THE UNIT CONTRACT PRICE BID FOR THE SEVERAL PAY ITEMS.

TEMPORARY DRAINAGE AT END BENT

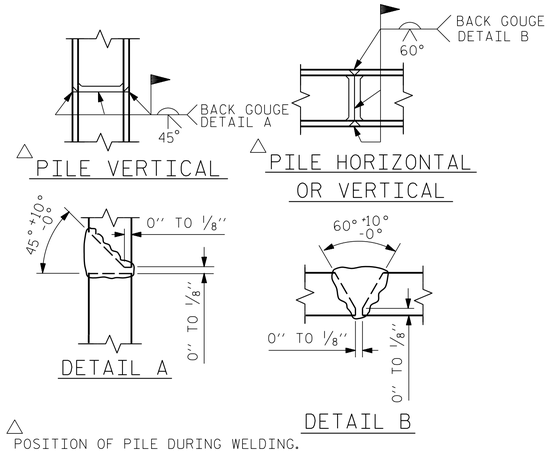

△ POSITION OF PILE DURING WELDING.

PILE SPLICE DETAILS

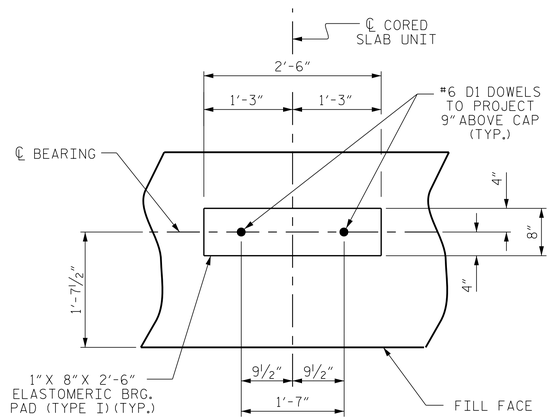

DETAIL "A"

(END BENT No. 1 SHOWN, END BENT No. 2 SIMILAR BY ROTATION)

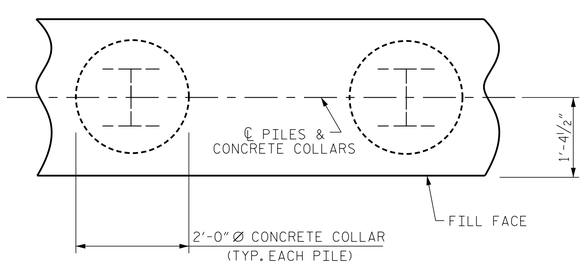

PLAN

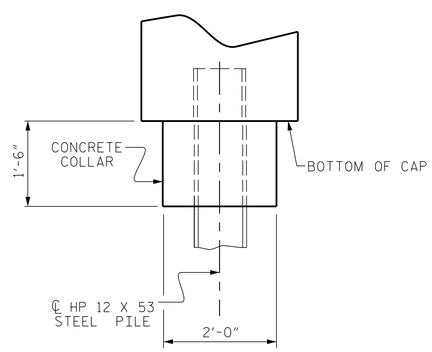

ELEVATION

CORROSION PROTECTION FOR STEEL PILES DETAIL

(END BENT No. 1 SHOWN, END BENT No. 2 SIMILAR BY ROTATION)

BAR TYPES

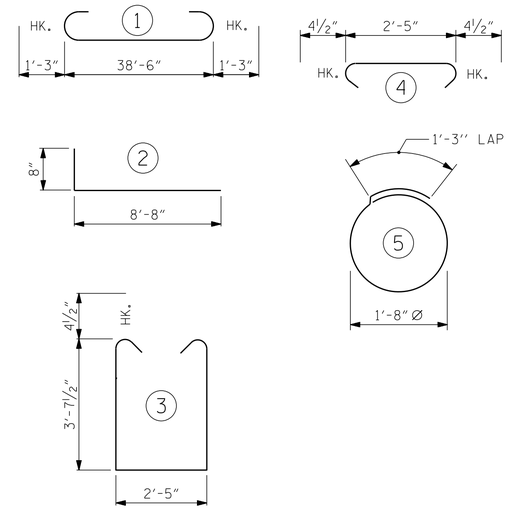

ALL BAR DIMENSIONS ARE OUT TO OUT.

END BENT No. 1	END BENT No. 2
HP 12 X 53 STEEL PILES NO: 7 LIN. FT. = 399	HP 12 X 53 STEEL PILES NO: 7 LIN. FT. = 399
PILE DRIVING EQUIPMENT SETUP FOR HP 12 X 53 STEEL PILES NO: 7	PILE DRIVING EQUIPMENT SETUP FOR HP 12 X 53 STEEL PILES NO: 7
PILE REDRIVES NO: 4	PILE REDRIVES NO: 4

BILL OF MATERIAL

FOR ONE END BENT

BAR	NO.	SIZE	TYPE	LENGTH	WEIGHT
B1	8	#9	1	41'-0"	1115
B2	28	#4	STR	20'-7"	385
B3	10	#4	STR	2'-5"	16
D1	22	#6	STR	1'-6"	50
H1	40	#4	2	9'-4"	249
K1	16	#4	STR	2'-11"	31
S1	50	#4	3	10'-5"	348
S2	50	#4	4	3'-2"	106
S3	28	#4	5	6'-6"	122
V1	52	#4	STR	6'-2"	214

REINFORCING STEEL (FOR ONE END BENT) 2636 LBS.

CONCRETE QUANTITIES

END BENT No. 1

CLASS A CONCRETE BREAKDOWN

POUR #1	CAP, LOWER PART OF WINGS & COLLARS	19.5 C.Y.
POUR #2	UPPER PART OF WINGS	2.1 C.Y.
TOTAL CLASS A CONCRETE		21.6 C.Y.

END BENT No. 2

CLASS A CONCRETE BREAKDOWN

POUR #1	CAP, LOWER PART OF WINGS & COLLARS	19.5 C.Y.
POUR #2	UPPER PART OF WINGS	2.3 C.Y.
TOTAL CLASS A CONCRETE		21.8 C.Y.

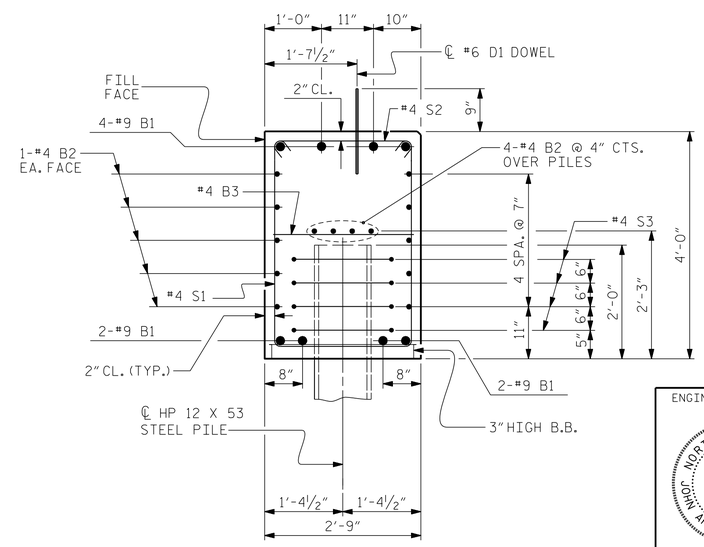

SECTION A-A

(CONCRETE COLLAR NOT SHOWN FOR CLARITY. SEE "CORROSION PROTECTION FOR STEEL PILES DETAIL.")

PROJECT NO. B-6002

EDGECOMBE COUNTY

STATION: 15+47.50 -L-

SHEET 4 OF 4

ENGINEER OF RECORD 12/11/2019

NORTH CAROLINA PROFESSIONAL SEAL 22072 ENGINEER JOHN ARTHUR DILWORTH

DocuSigned by: John Arthur Dilworth

WETHERILL ENGINEERING

1223 Jones Franklin Rd. Raleigh, N.C. 27606 Bus: 919 851 8077 Fax: 919 851 8107 LICENSE NO. F-0377

STATE OF NORTH CAROLINA
DEPARTMENT OF TRANSPORTATION
RALEIGH

SUBSTRUCTURE

END BENT No. 1 & 2 DETAILS

REVISIONS						
NO.	BY:	DATE:	NO.	BY:	DATE:	
1			3			
2			4			

SHEET NO. S-15

TOTAL SHEETS 19

ASSEMBLED BY : J. PENDERGRAFT DATE : 9-18
CHECKED BY : J. DILWORTH DATE : 9-18

DRAWN BY : WJH 12/11
CHECKED BY : AAC 12/11

REV. 4/17 MAA/THC

DOCUMENT NOT CONSIDERED FINAL UNLESS ALL SIGNATURES COMPLETED

STD. NO. EB_33_90S4

P:\2018\18133.01_EDGECOMBE_64\Structures\DGN\EDGDECOMBE 64 _SMU_EB.dgn
12/10/2019 2:50:04 PM

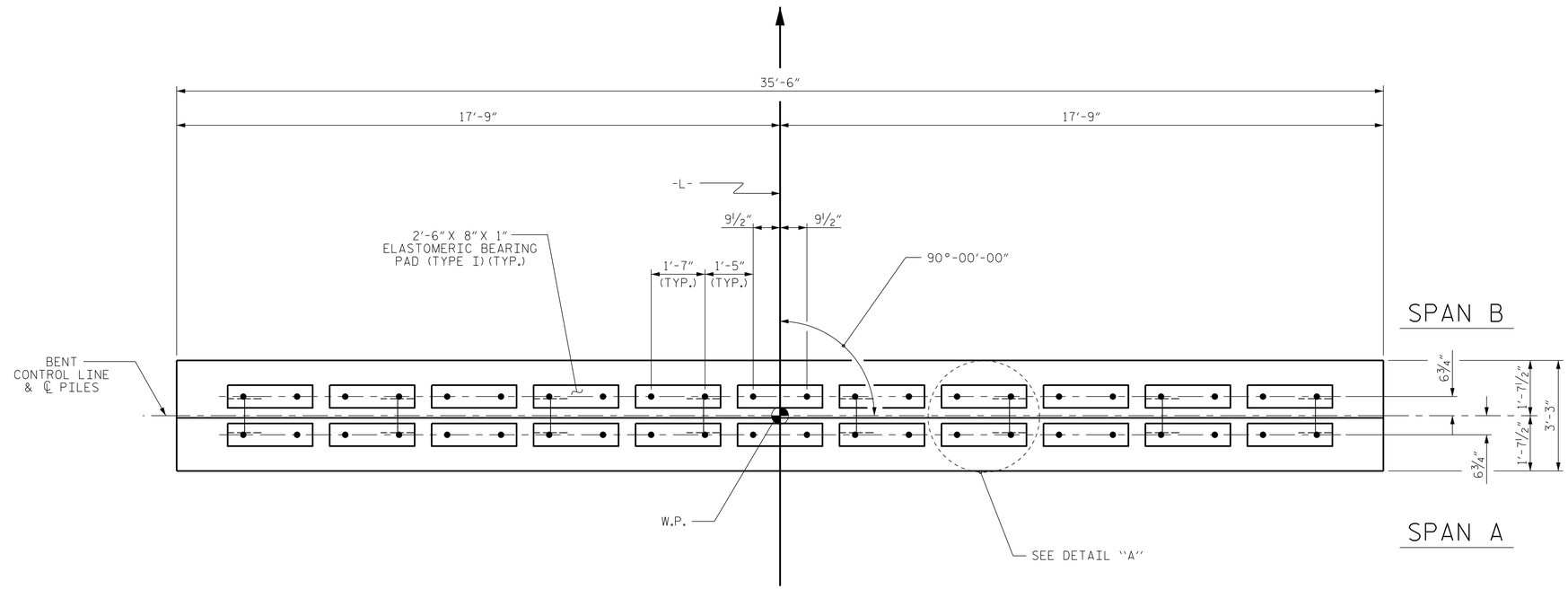

PLAN

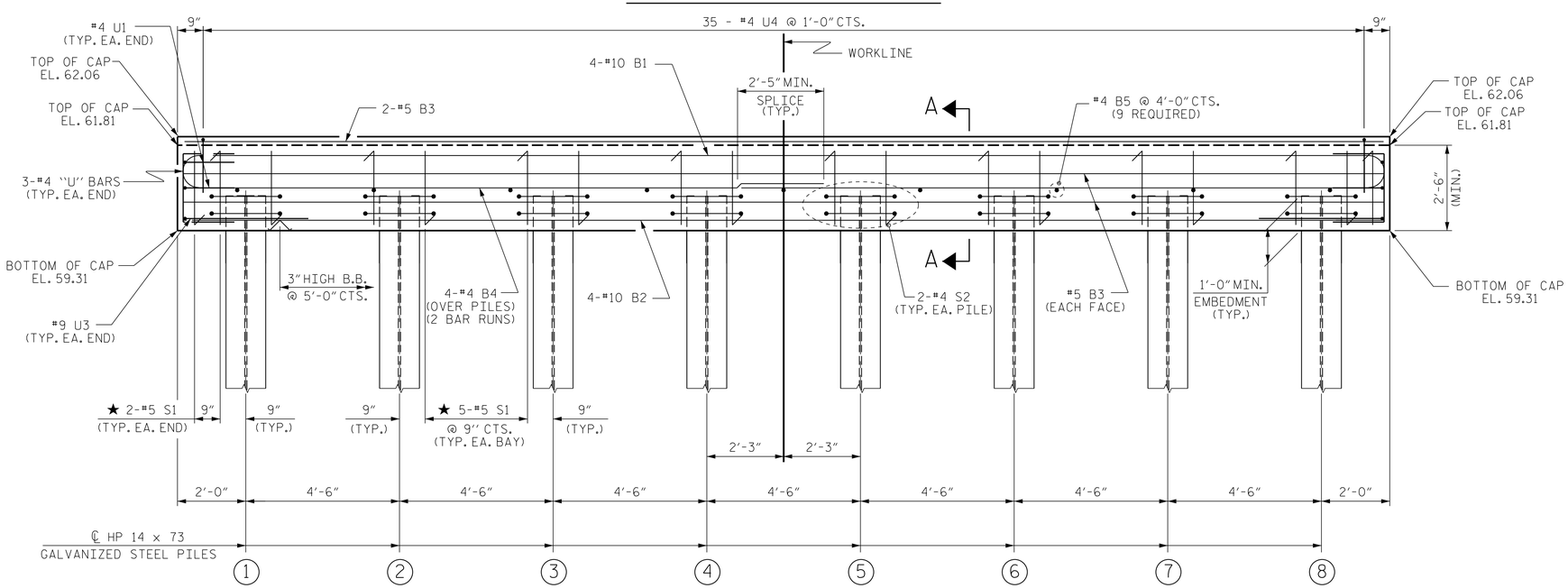

ELEVATION

FOR SECTION A-A, SEE SHEET 2 OF 2

NOTES

STIRRUPS IN CAP MAY BE SHIFTED AS NECESSARY TO CLEAR DOWELS.

★ INVERT ALTERNATE STIRRUPS.

GALVANIZE THE TOP OF EACH INTERIOR BENT PILE A MINIMUM OF 33 FEET. GALVANIZE IN ACCORDANCE WITH SECTION 1076 OF THE STANDARD SPECIFICATIONS.

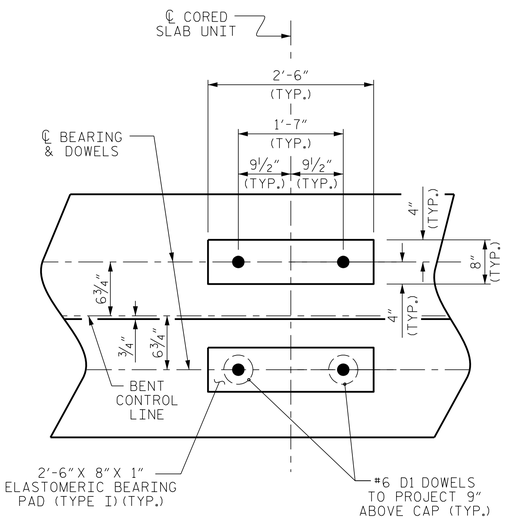

DETAIL "A"

(DIMENSIONS ARE TYPICAL EACH BEARING)

PROJECT NO. B-6002

EDGECOMBE COUNTY

STATION: 15+47.50 -L-

SHEET 1 OF 2

ENGINEER OF RECORD
12/11/2019

NORTH CAROLINA PROFESSIONAL SEAL 22072 ENGINEER JOHN ARTHUR DILWORTH

DocuSigned by: John Arthur Dilworth
E2F1B0C...

WETHERILL ENGINEERING
1223 Jones Franklin Rd.
Raleigh, N.C. 27606
Bus: 919 851 8077
Fax: 919 851 8107
LICENSE NO. F-0377

STATE OF NORTH CAROLINA
DEPARTMENT OF TRANSPORTATION
RALEIGH

SUBSTRUCTURE

BENT No. 1

REVISIONS						SHEET NO.
NO.	BY:	DATE:	NO.	BY:	DATE:	S-16
1			3			TOTAL SHEETS
2			4			19

ASSEMBLED BY : J. PENDERGRAFT DATE : 9-18
CHECKED BY : J. DILWORTH DATE : 9-18

DRAWN BY : DGE 05/10
CHECKED BY : MKT 05/10

REV. 6/17 MAA/THC

DOCUMENT NOT CONSIDERED FINAL UNLESS ALL SIGNATURES COMPLETED

P:\2018\18133.01_EDGECOMBE_64\Structures\DGN\EDGDECOMBE 64 _SMU_BT.dgn
12/10/2019 2:50:35 PM

STD. NO. 14" HP_BT_33_90S_<60'

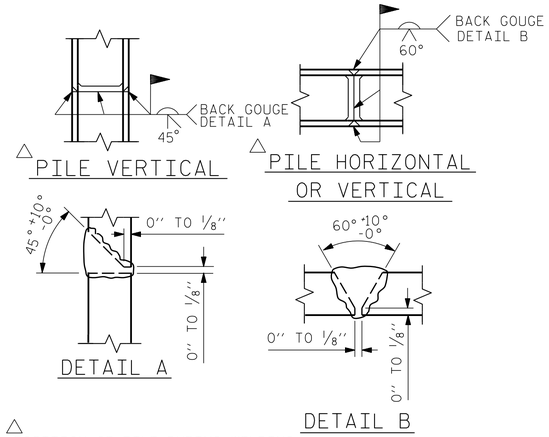

△ POSITION OF PILE DURING WELDING.

PILE SPLICE DETAILS

BAR TYPES

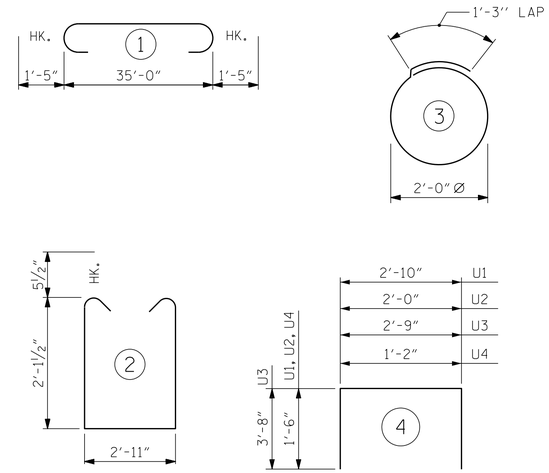

ALL BAR DIMENSIONS ARE OUT TO OUT.

BILL OF MATERIAL
FOR ONE BENT

BAR	NO.	SIZE	TYPE	LENGTH	WEIGHT
B1	4	#10	1	37'-10"	651
B2	4	#10	STR	35'-2"	605
B3	6	#5	STR	35'-2"	220
B4	8	#4	STR	18'-10"	101
B5	9	#4	STR	2'-11"	18
D1	44	#6	STR	1'-6"	99
S1	39	#5	2	8'-1"	329
S2	16	#4	3	7'-7"	81
U1	4	#4	4	5'-10"	16
U2	6	#4	4	5'-0"	20
U3	2	#9	4	10'-1"	69
U4	35	#4	4	4'-2"	97

REINFORCING STEEL (FOR ONE BENT) 2306 LBS

CLASS A CONCRETE BREAKDOWN (FOR ONE BENT)

TOTAL CLASS A CONCRETE 10.7 C.Y.

HP 14 X 73 GALVANIZED STEEL PILES (FOR ONE BENT)

No. 8 LIN. FT. 648

PILE DRIVING EQUIPMENT SETUP FOR HP 14 X 73 GALVANIZED STEEL PILES (FOR ONE BENT) NO: 8

PILE REDRIVES NO: 4

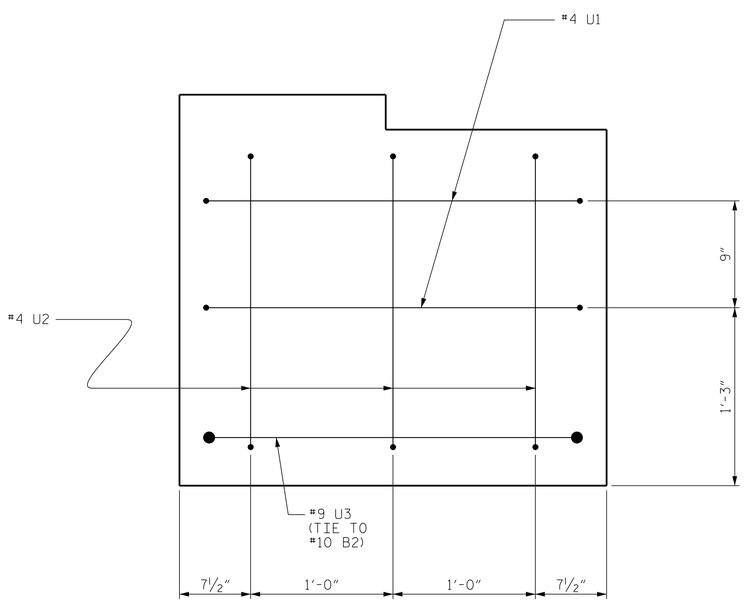

END OF CAP VIEW
(SIMILAR BOTH ENDS)

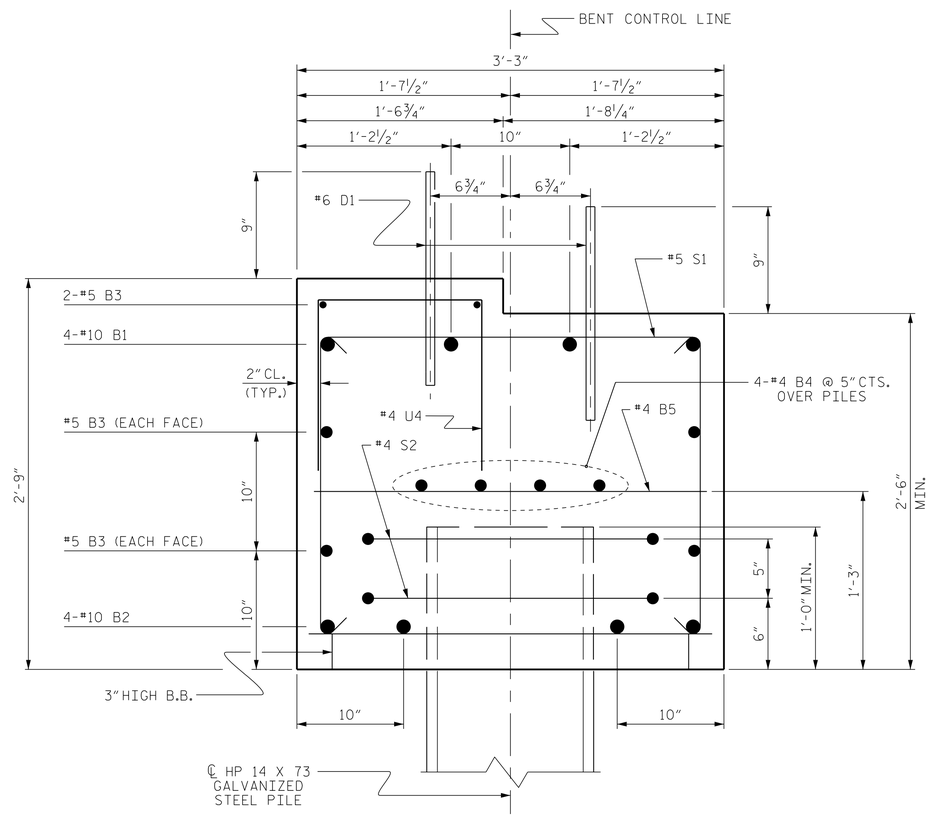

SECTION A-A

PROJECT NO. B-6002

EDGECOMBE COUNTY

STATION: 15+47.50 -L-

SHEET 2 OF 2

ENGINEER OF RECORD
12/11/2019

NORTH CAROLINA PROFESSIONAL SEAL 22072 ENGINEER JOHN ARTHUR DILWORTH

DocuSigned by: John Arthur Dilworth

WETHERILL ENGINEERING

1223 Jones Franklin Rd.
Raleigh, N.C. 27606
Bus: 919 851 8077
Fax: 919 851 8107
LICENSE NO. F-0377

STATE OF NORTH CAROLINA
DEPARTMENT OF TRANSPORTATION
RALEIGH

SUBSTRUCTURE

BENT No. 1

REVISIONS						SHEET NO.
NO.	BY:	DATE:	NO.	BY:	DATE:	S-17
1			3			TOTAL SHEETS
2			4			19

DOCUMENT NOT CONSIDERED FINAL UNLESS ALL SIGNATURES COMPLETED

ASSEMBLED BY : J. PENDERGRAFT DATE : 9-18
CHECKED BY : J. DILWORTH DATE : 9-18

DRAWN BY : DGE 05/10
CHECKED BY : MKT 05/10
REV. 6/17 MAA/THC

P:\2018\18133.01_EDGECOMBE_64\Structures\DGN\EDGDECOMBE 64 _SMU_BT.dgn
12/10/2019 2:50:58 PM

STD. NO. 14" HP_BT_33_90S_<60'

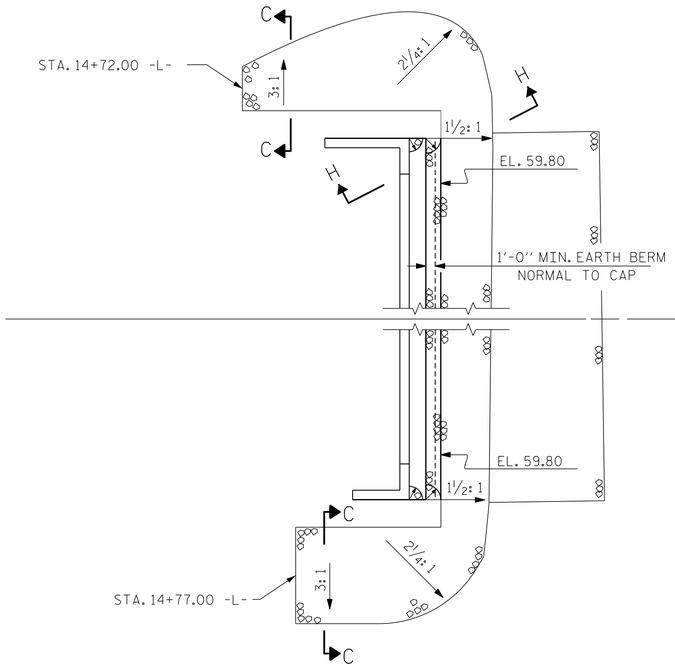

@ END BENT 1

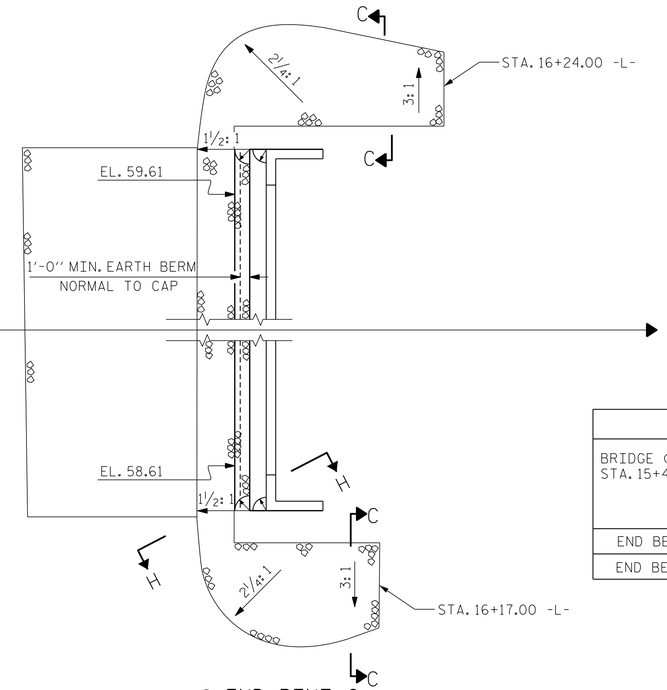

@ END BENT 2

PLAN OF RIP RAP

ESTIMATED QUANTITIES		
BRIDGE @ STA. 15+47.50 -L-	RIP RAP CLASS II (2'-0" THICK)	GEOTEXTILE FOR DRAINAGE
	TONS	SQUARE YARDS
END BENT 1	120	135
END BENT 2	145	160

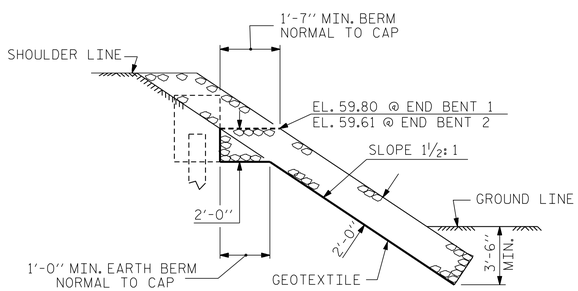

SECTION H-H

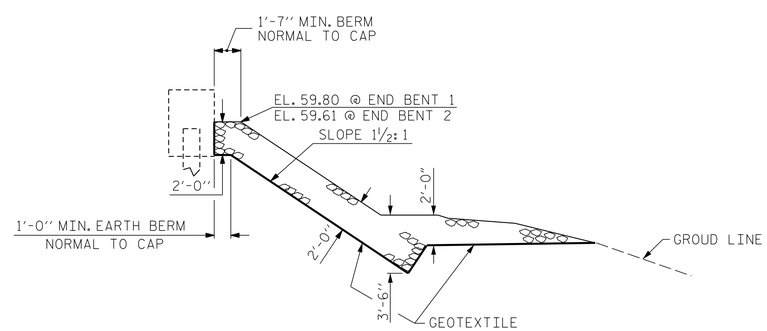

℄ SECTION

BERM RIP RAPPED

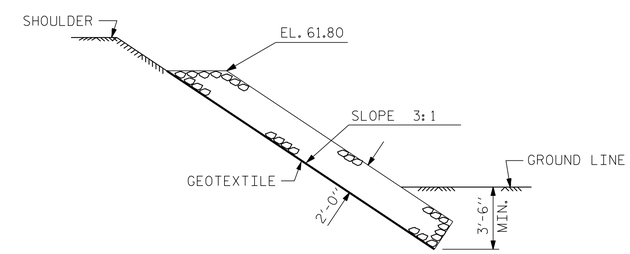

SECTION C-C

PROJECT NO. B-6002

EDGECOMBE COUNTY

STATION: 15+47.50 -L-

ENGINEER OF RECORD
12/11/2019

NORTH CAROLINA PROFESSIONAL SEAL 22072 ENGINEER JOHN ARTHUR DILWORTH

DocuSigned by: John Arthur Dilworth

WETHERILL ENGINEERING
1223 Jones Franklin Rd.
Raleigh, N.C. 27606
Bus: 919 851 8077
Fax: 919 851 8107
LICENSE NO. F-0377

STATE OF NORTH CAROLINA
DEPARTMENT OF TRANSPORTATION
RALEIGH

RIP RAP DETAILS

REVISIONS								SHEET NO.
NO.	BY:	DATE:	NO.	BY:	DATE:			S-18
1			3					TOTAL SHEETS
2			4					19

DOCUMENT NOT CONSIDERED FINAL UNLESS ALL SIGNATURES COMPLETED

ASSEMBLED BY : A. KLINK		DATE : 10-18	
CHECKED BY : J. DILWORTH		DATE : 10-18	
DRAWN BY : REK 1/84	REV. 10/1/11		MAA/GM
CHECKED BY : RDU 1/84	REV. 12/21/11		MAA/GM
	REV. 12/17		MAA/THC

P:\2018\18133.01_EDGECOMBE_64\Structures\DGN\EDGECOMBE 64 _SMU_RR.dgn
12/10/2019 2:51:29 PM

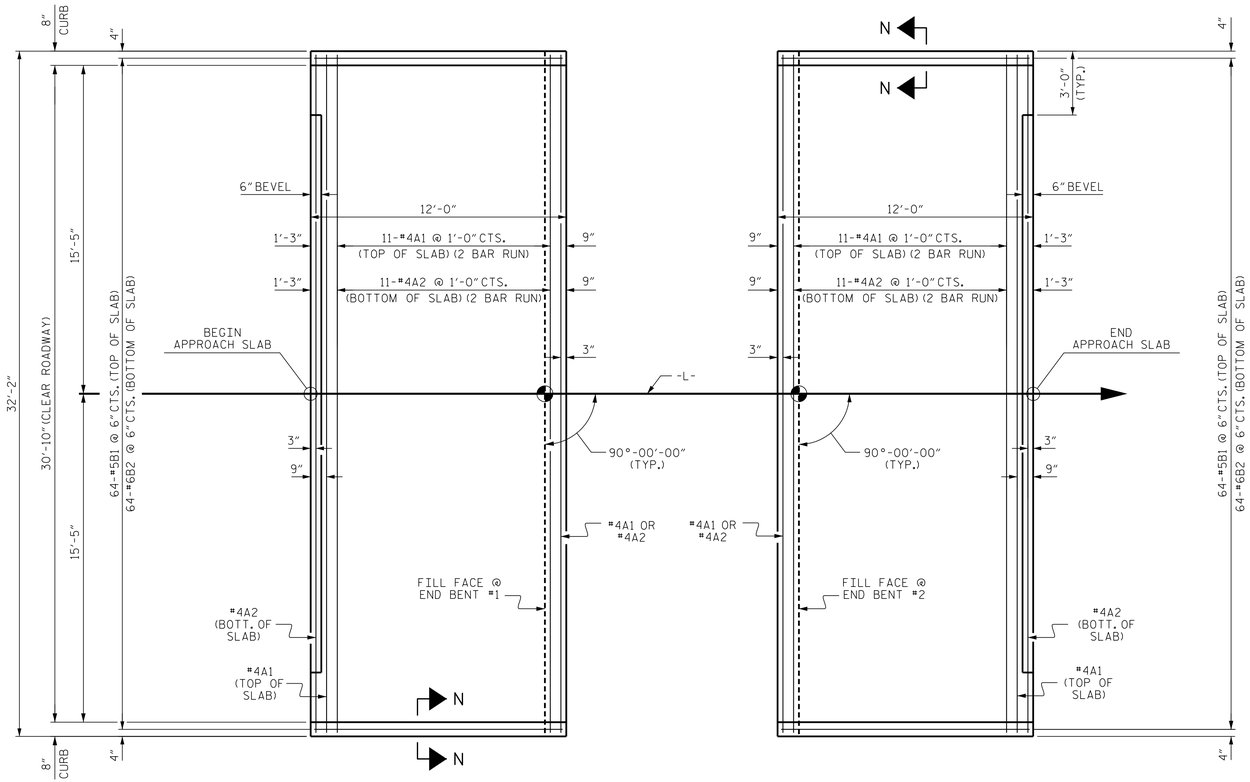

PLAN @ END BENT #1

PLAN @ END BENT #2

DIMENSIONS SHOWN ARE TYPICAL FOR BOTH APPROACH SLABS

NOTES

FOR BRIDGE APPROACH FILL INCLUDING GEOTEXTILE, 4"Ø DRAINAGE PIPE, AND SELECT MATERIAL BACKFILL, SEE ROADWAY PLANS.

GEOTEXTILE SHALL BE TYPE 1 IN ACCORDANCE WITH THE STANDARD SPECIFICATIONS SECTION 1056.

SELECT MATERIAL BACKFILL (CLASS V OR CLASS VI) SHALL BE IN ACCORDANCE WITH STANDARD SPECIFICATIONS SECTION 1016.

SELECT MATERIAL BACKFILL IS TO BE CONTINUOUS ALONG FILL FACE OF BACKWALL FROM OUTSIDE EDGE TO OUTSIDE EDGE OF APPROACH SLAB.

FOR THE 4"Ø DRAINAGE PIPE OUTLET(S), SEE ROADWAY STANDARD DRAWINGS.

AREA BETWEEN THE WINGWALL AND APPROACH SLAB SHALL BE GRADED TO DRAIN THE WATER AWAY FROM THE FILL FACE OF THE BRIDGE AND SHALL BE PAVED. SEE ROADWAY PLANS.

APPROACH SLAB GROOVING IS NOT REQUIRED.

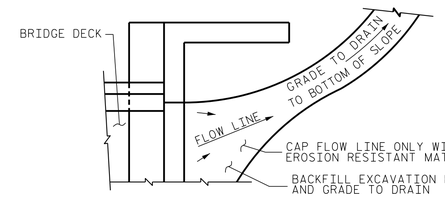

NOTE: IF THE APPROACH SLAB IS NOT CONSTRUCTED IMMEDIATELY AFTER THE BACKFILLING OF THE END BENT EXCAVATION, GRADE TO DRAIN TO THE BOTTOM OF THE SLOPE AND PROVIDE EROSION RESISTANT MATERIAL, SUCH AS FIBERGLASS ROVING OR AS DIRECTED BY THE ENGINEER TO PREVENT SOIL EROSION AND TO PROTECT THE AREA ADJACENT TO THE STRUCTURE. THE CONTRACTOR WILL BE REQUIRED TO REMOVE THESE MATERIALS PRIOR TO CONSTRUCTION OF THE APPROACH SLAB.

TEMPORARY DRAINAGE DETAIL

BILL OF MATERIAL

APPROACH SLAB AT EB #1

BAR	NO.	SIZE	TYPE	LENGTH	WEIGHT
* A1	26	#4	STR	16'-11"	294
A2	26	#4	STR	16'-9"	291
* B1	64	#5	STR	11'-2"	745
B2	64	#6	STR	11'-8"	1121
REINFORCING STEEL				LBS.	1412
* EPOXY COATED REINFORCING STEEL				LBS.	1039
CLASS AA CONCRETE				C. Y.	18.4

APPROACH SLAB AT EB #2

BAR	NO.	SIZE	TYPE	LENGTH	WEIGHT
* A1	26	#4	STR	16'-11"	294
A2	26	#4	STR	16'-9"	291
* B1	64	#5	STR	11'-2"	745
B2	64	#6	STR	11'-8"	1121
REINFORCING STEEL				LBS.	1412
* EPOXY COATED REINFORCING STEEL				LBS.	1039
CLASS AA CONCRETE				C. Y.	19.5

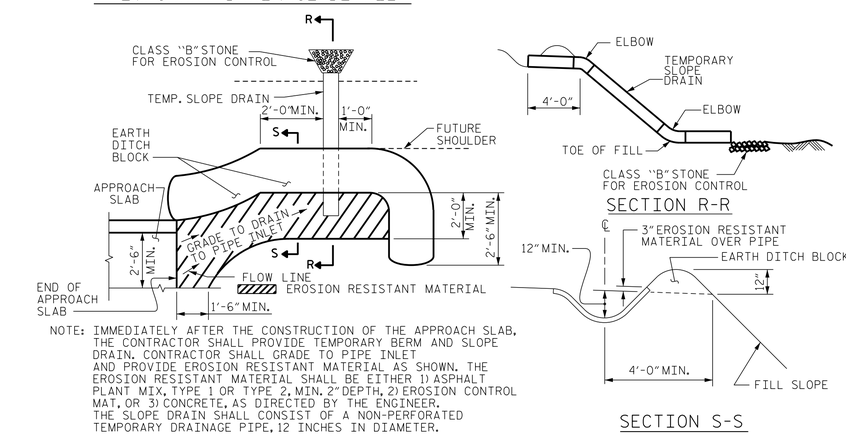

NOTE: IMMEDIATELY AFTER THE CONSTRUCTION OF THE APPROACH SLAB, THE CONTRACTOR SHALL PROVIDE TEMPORARY BERM AND SLOPE DRAIN. CONTRACTOR SHALL GRADE TO PIPE INLET AND PROVIDE EROSION RESISTANT MATERIAL AS SHOWN. THE EROSION RESISTANT MATERIAL SHALL BE EITHER 1) ASPHALT PLANT MIX, TYPE 1 OR TYPE 2, MIN. 2" DEPTH, 2) EROSION CONTROL MAT, OR 3) CONCRETE, AS DIRECTED BY THE ENGINEER. THE SLOPE DRAIN SHALL CONSIST OF A NON-PERFORATED TEMPORARY DRAINAGE PIPE, 12 INCHES IN DIAMETER.

PLAN VIEW

TEMPORARY BERM AND SLOPE DRAIN DETAILS

(TO BE USED WHEN SHOULDER BERM GUTTER IS REQUIRED)

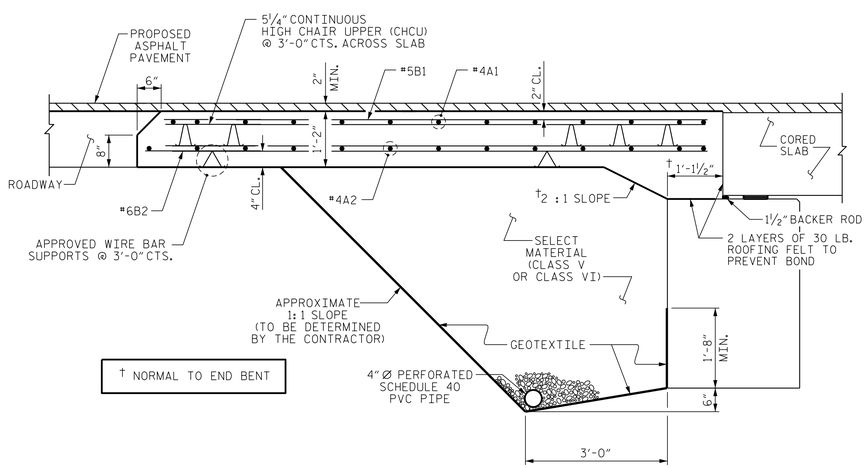

† NORMAL TO END BENT

SECTION THRU SLAB

(TYPE II - MODIFIED APPROACH FILL)

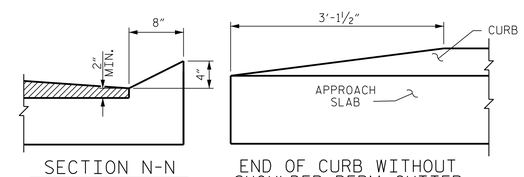

SECTION N-N

END OF CURB WITHOUT SHOULDER BERM GUTTER

CURB DETAILS

SPLICE LENGTHS		
BAR SIZE	EPOXY COATED	UNCOATED
#4	2'-0"	1'-9"
#5	2'-6"	2'-2"
#6	3'-10"	2'-7"

PROJECT NO. B-6002

EDGECOMBE COUNTY

STATION: 15+47.50 -L-

ENGINEER OF RECORD
12/11/2019

NORTH CAROLINA PROFESSIONAL SEAL 22072 ENGINEER JOHN ARTHUR DILWORTH

Docusigned by: John Arthur Dilworth
8/27/2020

WETHERILL ENGINEERING
1223 Jones Franklin Rd.
Raleigh, N.C. 27606
Bus: 919 851 8077
Fax: 919 851 8107
LICENSE NO. F-0377

STATE OF NORTH CAROLINA
DEPARTMENT OF TRANSPORTATION
RALEIGH

STANDARD
BRIDGE APPROACH SLAB
FOR PRESTRESSED CONCRETE
CORED SLAB UNIT
(SUB-REGIONAL TIER)
90° SKEW

REVISIONS							SHEET NO.
NO.	BY:	DATE:	NO.	BY:	DATE:		S-19
1			3				TOTAL SHEETS
2			4				19

STD. NO. BAS_33_90S

DOCUMENT NOT CONSIDERED FINAL UNLESS ALL SIGNATURES COMPLETED

ASSEMBLED BY : J. PENDERGRAFT	DATE : 8-18		
CHECKED BY : J. DILWORTH	DATE : 9-18		
DRAWN BY : SHS/MAA 5-09	REV. 12-17	MAA/THC	
CHECKED BY : BCH 5-09			

P:\2018\18133.01_EDGECOMBE_64\Structures\DGN\EDGDECOMBE 64 _SMU_AS.dgn
12/10/2019 2:52:00 PM

STANDARD NOTES

DESIGN DATA:

SPECIFICATIONS	A.A.S.H.T.O. (CURRENT)
LIVE LOAD	SEE PLANS
IMPACT ALLOWANCE	SEE A.A.S.H.T.O.
STRESS IN EXTREME FIBER OF	
STRUCTURAL STEEL - AASHTO M270 GRADE 36	20,000 LBS. PER SQ. IN.
- AASHTO M270 GRADE 50W	27,000 LBS. PER SQ. IN.
- AASHTO M270 GRADE 50	27,000 LBS. PER SQ. IN.
REINFORCING STEEL IN TENSION	
GRADE 60	24,000 LBS. PER SQ. IN.
CONCRETE IN COMPRESSION	1,200 LBS. PER SQ. IN.
CONCRETE IN SHEAR	SEE A.A.S.H.T.O.
STRUCTURAL TIMBER - TREATED OR	
UNTREATED - EXTREME FIBER STRESS	1,800 LBS. PER SQ. IN.
COMPRESSION PERPENDICULAR TO GRAIN OF TIMBER	375 LBS. PER SQ. IN.
EQUIVALENT FLUID PRESSURE OF EARTH	30 LBS. PER CU. FT. (MINIMUM)

MATERIAL AND WORKMANSHIP:

EXCEPT AS MAY OTHERWISE BE SPECIFIED ON PLANS OR IN THE SPECIAL PROVISIONS, ALL MATERIAL AND WORKMANSHIP SHALL BE IN ACCORDANCE WITH THE 2018 "STANDARD SPECIFICATIONS FOR ROADS AND STRUCTURES" OF THE N. C. DEPARTMENT OF TRANSPORTATION.

STEEL SHEET PILING FOR PERMANENT OR TEMPORARY APPLICATIONS SHALL BE HOT ROLLED.

CONCRETE:

UNLESS OTHERWISE REQUIRED ON PLANS, CLASS A CONCRETE SHALL BE USED FOR ALL PORTIONS OF ALL STRUCTURES WITH THE EXCEPTION THAT: CLASS AA CONCRETE SHALL BE USED IN BRIDGE SUPERSTRUCTURES, ABUTMENT BACKWALLS, AND APPROACH SLABS; AND CLASS B CONCRETE SHALL BE USED FOR SLOPE PROTECTION AND RIP RAP.

CONCRETE CHAMFERS:

UNLESS OTHERWISE NOTED ON THE PLANS, ALL EXPOSED CORNERS ON STRUCTURES SHALL BE CHAMFERED 3/4" WITH THE FOLLOWING EXCEPTIONS: TOP CORNERS OF CURBS MAY BE ROUNDED TO 1-1/2" RADIUS WHICH IS BUILT INTO CURB FORMS; CORNERS OF TRANSVERSE FLOOR EXPANSION JOINTS SHALL BE ROUNDED WITH A 1/4" FINISHING TOOL UNLESS OTHERWISE REQUIRED ON PLANS; AND CORNERS OF EXPANSION JOINTS IN THE ROADWAY FACES AND TOPS OF CURBS AND SIDEWALKS SHALL BE ROUNDED TO A 1/4" RADIUS WITH A FINISHING STONE OR TOOL UNLESS OTHERWISE REQUIRED ON PLANS.

DOWELS:

DOWELS WHEN INDICATED ON PLANS AS FOR CULVERT EXTENSIONS, SHALL BE EMBEDDED AT LEAST 12" INTO THE OLD CONCRETE AND GROUTED INTO PLACE WITH 1:2 CEMENT MORTAR.

ALLOWANCE FOR DEAD LOAD DEFLECTION, SETTLEMENT, ETC. IN CASTING SUPERSTRUCTURES:

BRIDGES SHALL BE BUILT ON THE GRADE OR VERTICAL CURVE SHOWN ON PLANS. SLABS, CURBS AND PARAPETS SHALL CONFORM TO THE GRADE OR CURVE.

ALL DIMENSIONS WHICH ARE GIVEN IN SECTION AND ARE AFFECTED BY DEAD LOAD DEFLECTIONS ARE DIMENSIONS AT CENTER LINE OF BEARING UNLESS OTHERWISE NOTED ON PLANS. IN SETTING FORMS FOR STEEL BEAM BRIDGES AND PRESTRESSED CONCRETE GIRDER BRIDGES, ADJUSTMENTS SHALL BE MADE DUE TO THE DEAD LOAD DEFLECTIONS FOR THE ELEVATIONS SHOWN. WHERE BLOCKS ARE SHOWN OVER BEAMS FOR BUILDING UP TO THE SLAB, THE VERTICAL DIMENSIONS OF THE BLOCKS SHALL BE ADJUSTED BETWEEN BEARINGS TO COMPENSATE FOR DEAD LOAD DEFLECTIONS, VERTICAL CURVE ORDINATE, AND ACTUAL BEAM CAMBER. WHERE BOTTOM OF SLAB IS IN LINE WITH BOTTOM OF TOP FLANGES, DEPTH OF SLAB BETWEEN BEARINGS SHALL BE ADJUSTED TO COMPENSATE FOR DEAD LOAD DEFLECTION, VERTICAL CURVE ORDINATE, AND ACTUAL BEAM CAMBER.

IN SETTING FALSEWORK AND FORMS FOR REINFORCED CONCRETE SPANS, AN ALLOWANCE SHALL BE MADE FOR DEAD LOAD DEFLECTIONS, SETTLEMENT OF FALSEWORK, AND PERMANENT CAMBER WHICH SHALL BE PROVIDED FOR IN ADDITION TO THE ELEVATIONS SHOWN. AFTER REMOVAL OF THE FALSEWORK, THE FINISHED STRUCTURES SHALL CONFORM TO THE PROFILE AND ELEVATIONS SHOWN ON THE PLANS AND CONSTRUCTION ELEVATIONS FURNISHED BY THE ENGINEER.

DETAILED DRAWINGS FOR FALSEWORK OR FORMS FOR BRIDGE SUPERSTRUCTURE AND ANY STRUCTURE OR PARTS OF A STRUCTURE AS NOTED ON THE PLANS SHALL BE SUBMITTED TO THE ENGINEER FOR APPROVAL BEFORE CONSTRUCTION OF THE FALSEWORK OR FORMS IS STARTED.

REINFORCING STEEL:

ALL REINFORCING STEEL SHALL BE DEFORMED. DIMENSIONS RELATIVE TO PLACEMENT OF REINFORCING ARE TO CENTERS OF BARS UNLESS OTHERWISE INDICATED IN THE PLANS. DIMENSIONS ON BAR DETAILS ARE TO CENTERS OF BARS OR ARE OUT TO OUT AS INDICATED ON PLANS.

WIRE BAR SUPPORTS SHALL BE PROVIDED FOR REINFORCING STEEL WHERE INDICATED ON THE PLANS. WHEN BAR SUPPORT PIECES ARE PLACED IN CONTINUOUS LINES, THEY SHALL BE SO PLACED THAT THE ENDS OF THE SUPPORTING WIRES SHALL BE LAPPED TO LOCK LEGS ON ADJOINING PIECES.

STRUCTURAL STEEL:

AT THE CONTRACTOR'S OPTION, HE MAY SUBSTITUTE 7/8" Ø SHEAR STUDS FOR THE ¾" Ø STUDS SPECIFIED ON THE PLANS. THIS SUBSTITUTION SHALL BE MADE AT THE RATE OF 3 - 7/8" Ø STUDS FOR 4 - 3/4" Ø STUDS, AND STUD SPACING CHANGES SHALL BE MADE AS NECESSARY TO PROVIDE THE SAME EQUIVALENT NUMBER OF 7/8" Ø STUDS ALONG THE BEAM AS SHOWN FOR 3/4" Ø STUDS BASED ON THE RATIO OF 3 - 7/8" Ø STUDS FOR 4 - 3/4" Ø STUDS. STUDS OF THE LENGTH SPECIFIED ON THE PLANS MUST BE PROVIDED. THE MAXIMUM SPACING SHALL BE 2'-0".

EXCEPT AT THE INTERIOR SUPPORTS OF CONTINUOUS BEAMS WHERE THE COVER PLATE IS IN CONTACT WITH BEARING PLATE, THE CONTRACTOR MAY, AT HIS OPTION, SUBSTITUTE FOR THE COVER PLATES DESIGNATED ON THE PLANS COVER PLATES OF THE EQUIVALENT AREA PROVIDED THESE PLATES ARE AT LEAST 5/16" IN THICKNESS AND DO NOT EXCEED A WIDTH EQUAL TO THE FLANGE WIDTH LESS 2" OR A THICKNESS EQUAL TO 2 TIMES THE FLANGE THICKNESS. THE SIZE OF FILLET WELDS SHALL CONFORM TO THE REQUIREMENTS OF THE CURRENT ANSI/AASHTO/AWS "BRIDGE WELDING CODE". ELECTROSLAG WELDING WILL NOT BE PERMITTED.

WITH THE SOLE EXCEPTION OF EDGES AT SURFACES WHICH BEAR ON OTHER SURFACES, ALL SHARP EDGES AND ENDS OF SHAPES AND PLATES SHALL BE SLIGHTLY ROUNDED BY SUITABLE MEANS TO A RADIUS OF APPROXIMATELY 1/16 INCH OR EQUIVALENT FLAT SURFACE AT A SUITABLE ANGLE PRIOR TO PAINTING, GALVANIZING, OR METALLIZING.

HANDRAILS AND POSTS:

METAL STANDARDS AND FACES OF THE CONCRETE END POSTS FOR THE METAL RAIL SHALL BE SET NORMAL TO THE GRADE OF THE CURB, UNLESS OTHERWISE SHOWN ON PLANS. THE METAL RAIL AND TOPS OF CONCRETE POSTS USED WITH THE ALUMINUM RAIL SHALL BE BUILT PARALLEL TO THE GRADE OF THE CURB.

METAL HANDRAILS SHALL BE IN ACCORDANCE WITH THE PLANS. RAILS SHALL BE AS MANUFACTURED FOR BRIDGE RAILING. CASTINGS SHALL BE OF A UNIFORM APPEARANCE. FINS AND OTHER DEFORMATIONS RESULTING FROM CASTING OR OTHERWISE SHALL BE REMOVED IN A MANNER SO THAT A UNIFORM COLORING OF THE COMPLETED CASTING SHALL BE OBTAINED. CASTINGS WITH DISCOLORATIONS OR OF NON-UNIFORM COLORING WILL NOT BE ACCEPTED. CERTIFIED MILL REPORTS ARE REQUIRED FOR METAL RAILS AND POSTS.

SPECIAL NOTES:

GENERALLY, IN CASE OF DISCREPANCY, THIS STANDARD SHEET OF NOTES SHALL GOVERN OVER THE SPECIFICATIONS, BUT THE REMAINDER OF THE PLANS SHALL GOVERN OVER NOTES HEREON, AND SPECIAL PROVISIONS SHALL GOVERN OVER ALL. SEE SPECIFICATIONS ARTICLE 105-4.

ENGLISH

JANUARY, 1990

STD. NO. SN

REV. 6-16-95 EEM (✓) RGW REV. 5-7-03 RWW (✓) JTE REV. 10-1-11 MAA (✓) GM
REV. 8-16-99 RWW (✓) LES REV. 5-1-06 TLA (✓) GM

BM-1 (BL STATION 9+30.00 51' RIGHT, IN 18" BIRCH) 74.84' RT OF -L- STA 13+94.88
ELEV. 56.01, N 754580 E 2384688

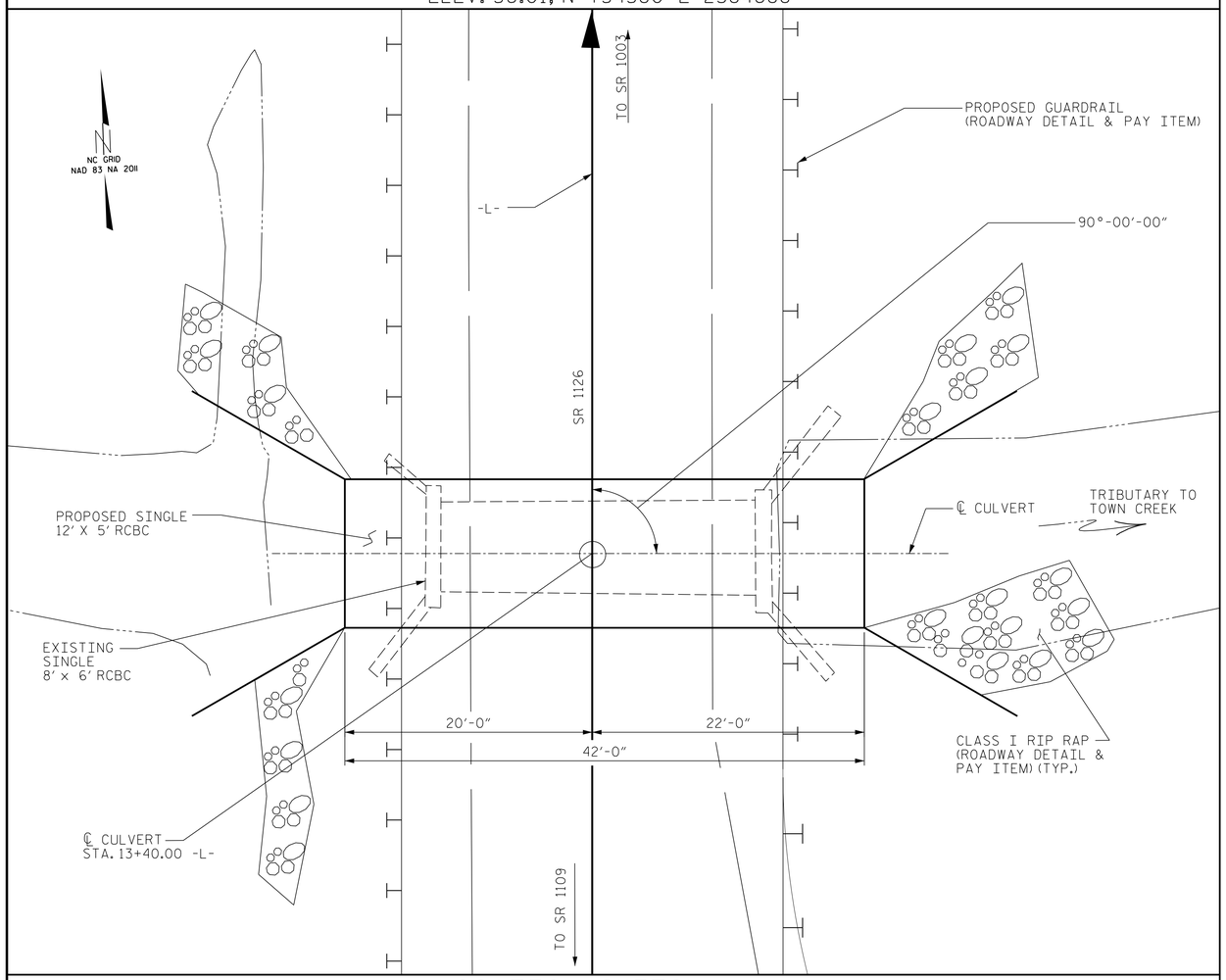

LOCATION SKETCH

FOR UTILITY INFORMATION, SEE UTILITY PLANS AND SPECIAL PROVISIONS.

FED. AID NO.: BRZ-1126(008)

NOTES

ASSUMED LIVE LOAD --------- HL-93 OR ALTERNATE LOADING.

DESIGN FILL TO BOTTOM OF TOP SLAB 1.85' (MIN.) AND 2.81' (MAX)

FOR OTHER DESIGN DATA AND NOTES SEE STANDARD NOTE SHEET.

3" Ø WEEP HOLES INDICATED TO BE IN ACCORDANCE WITH THE SPECIFICATIONS.

CONCRETE IN CULVERTS TO BE POURED IN THE FOLLOWING ORDER:

1. WING FOOTINGS AND FLOOR SLAB INCLUDING 4" OF ALL VERTICAL WALLS.

2. THE REMAINING PORTIONS OF THE WALLS AND WINGS FULL HEIGHT FOLLOWED BY ROOF SLAB AND HEADWALLS.

THE RESIDENT ENGINEER SHALL CHECK THE LENGTH OF CULVERT BEFORE STAKING IT OUT TO MAKE CERTAIN THAT IT WILL PROPERLY TAKE CARE OF THE FILL.

DIMENSIONS FOR WING LAYOUT AS WELL AS ADDITIONAL REINFORCING STEEL EMBEDDED IN BARREL ARE SHOWN ON WING SHEET.

FOR CULVERT DIVERSIONS DETAILS AND PAY ITEM, SEE EROSION CONTROL PLANS.

A 3 FOOT STRIP OF FILTER FABRIC SHALL BE ATTACHED TO THE FILL FACE OF THE WING COVERING THE ENTIRE LENGTH OF EXPANSION JOINT.

FOR SUBMITTAL OF WORKING DRAWINGS, SEE SPECIAL PROVISIONS.

FOR FALSEWORK AND FORMWORK, SEE SPECIAL PROVISIONS.

FOR CRANE SAFETY, SEE SPECIAL PROVISIONS.

FOR GROUT FOR STRUCTURES, SEE SPECIAL PROVISIONS.

AT THE CONTRACTOR'S OPTION, HE MAY SPLICE THE VERTICAL REINFORCING STEEL IN THE INTERIOR FACE OF EXTERIOR WALL ABOVE LOWER WALL CONSTRUCTION JOINT. THE SPLICE LENGTH SHALL BE AS PROVIDED IN THE SPLICE LENGTH CHART SHOWN ON THE PLANS. EXTRA WEIGHT OF STEEL DUE TO THE SPLICES SHALL BE PAID FOR BY THE CONTRACTOR.

THE EXISTING STRUCTURE CONSISTS OF A SINGLE 8'x6' REINFORCED CONCRETE BOX CULVERT APPROXIMATELY 28' LONG. THE EXISTING STRUCTURE SHALL BE REMOVED.

THE CONTRACTOR SHALL PROVIDE INDEPENDENT ASSURANCE SAMPLES OF REINFORCING STEEL AS FOLLOWS: FOR PROJECTS REQUIRING UP TO 400 TONS OF REINFORCING STEEL, ONE 30 INCH SAMPLE OF EACH SIZE BAR USED, AND FOR PROJECTS REQUIRING OVER 400 TONS OF REINFORCING STEEL, TWO 30 INCH SAMPLES OF EACH SIZE BAR USED. THE SAMPLE BARS SHOULD COME FROM STEEL ACTUALLY USED IN THE PROJECT AND THE SAMPLE BARS SHOULD BE REPLACED BY SPLICED BARS AS SPECIFIED IN THE SAMPLE BAR REPLACEMENT CHART. PAYMENT FOR THE SAMPLE BARS AND REPLACEMENT REINFORCING STEEL SHALL BE BE CONSIDERED INCIDENTAL TO VARIOUS PAY ITEMS.

NOTE: SAMPLE BAR REPLACEMENT LENGTHS BASED ON 30" (SAMPLE LENGTH) PLUS TWO SPLICE LENGTHS AND fy = 60 ksi.

SAMPLE BAR REPLACMENT	
SIZE	LENGTH
#3	6'-2"
#4	7'-4"
#5	8'-6"
#6	9'-8"
#7	10'-10"
#8	12'-0"
#9	13'-2"
#10	14'-6"
#11	15'-10"

TOTAL STRUCTURE QUANTITIES		
REMOVAL OF EXISTING STRUCTURE		LUMP SUM
CULVERT EXCAVATION		LUMP SUM
FOUNDATION CONDITIONING MATERIAL		52 TONS
CLASS A CONCRETE BARREL @ 1.403 CY/FT	58.9	C.Y.
WING ETC.	20.4	C.Y.
TOTAL	79.3	C.Y.
REINFORCING STEEL BARREL	6476	LBS.
WINGS ETC.	1268	LBS.
TOTAL	7744	LBS.

I HEREBY CERTIFY THESE PLANS ARE THE AS-BUILT PLANS

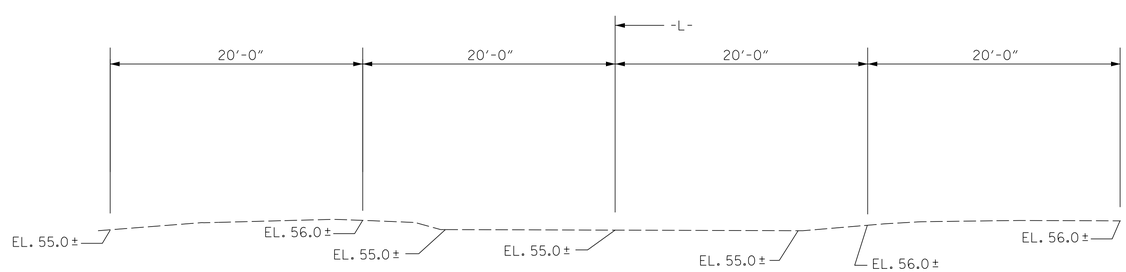

PROFILE ALONG ℄ CULVERT

ROADWAY DATA

GRADE POINT ELEV. @ STA 13+40.00 -L-	= 62.55
BED ELEV. @ STA 13+40.00 -L-	= 54.80
ROADWAY SLOPES	= 3:1

HYDRAULIC DATA

DESIGN DISCHARGE	= 3500 CFS
FREQUENCY OF DESIGN FLOOD	= 25 YEARS
DESIGN HIGH WATER ELEVATION	= 60.8
DRAINAGE AREA	= 79.9 SQ. MI.
BASE DISCHARGE (Q100)	= 5100 CFS
BASE HIGH WATER ELEVATION	= 62.4

OVERTOPPING FLOOD DATA

OVERTOPPING DISCHARGE	= 3725± CFS
FREQUENCY OF OVERTOPPING FLOOD	= 25+ YEAR
OVERTOPPING FLOOD ELEVATION	= 61.1 *

* OVERTOPPING OCCURTS AT CENTER -L- STA. 11+70±, ELEV = 61.1

PROJECT NO. B-6002
EDGECOMBE COUNTY
STATION: 13+40.00 -L-

ENGINEER OF RECORD
5/20/2019
NORTH CAROLINA PROFESSIONAL SEAL 22072 ENGINEER JOHN ARTHUR DILWORTH

Docusigned by:
John Arthur Dilworth
621382269...

WETHERILL ENGINEERING
1223 Jones Franklin Rd.
Raleigh, N.C. 27606
Bus: 919 851 8077
Fax: 919 851 8107
LICENSE NO. F-0377

STATE OF NORTH CAROLINA
DEPARTMENT OF TRANSPORTATION
RALEIGH

BARREL STANDARD
SINGLE 12 FT. X 5 FT.
CONCRETE BOX CULVERT
90° SKEW

REVISIONS						SHEET NO.
NO.	BY:	DATE:	NO.	BY:	DATE:	C01-1
1			3			TOTAL SHEETS
2			4			5

DRAWN BY : J. PENDERGRAFT DATE : 4-19
CHECKED BY : J. DILWORTH DATE : 4-19

DOCUMENT NOT CONSIDERED FINAL UNLESS ALL SIGNATURES COMPLETED

P:\2018\18133.01_EDGECOMBE_64\Structures\DGN\CULVERT\EDGECOMBE 64 _SMU_CU.dgn
5/20/2019 8:20:14 AM

LOAD AND RESISTANCE FACTOR RATING (LRFR) SUMMARY FOR REINFORCED CONCRETE BOX CULVERTS

LEVEL		VEHICLE	WEIGHT (W) (TONS)	CONTROLLING LOAD RATING (#)	MINIMUM RATING FACTORS (RF)	TONS = W × RF	STRENGTH I LIMIT STATE									COMMENT NUMBER
							LIVE-LOAD FACTORS (γ_{LL})	MOMENT				SHEAR				
								RATING FACTOR	BOX NO.	ELEMENT TYPE	DISTANCE FROM LEFT END OF ELEMENT (ft)	RATING FACTOR	BOX NO.	ELEMENT TYPE	DISTANCE FROM LEFT END OF ELEMENT (ft)	
DESIGN LOAD RATING		HL-93 (INVENTORY)	N/A	1	1.10	--	1.75	1.30	1	TOP SLAB	6.67	1.10	1	TOP SLAB	11.73	
		HL-93 (OPERATING)	N/A		1.43	--	1.35	1.69	1	TOP SLAB	6.67	1.43	1	TOP SLAB	11.73	
		HS-20 (INVENTORY)	36.000	2	1.50	54.00	1.75	1.50	1	TOP SLAB	6.67	1.50	1	TOP SLAB	11.73	
		HS-20 (OPERATING)	36.000		1.94	69.84	1.35	1.95	1	TOP SLAB	6.67	1.94	1	TOP SLAB	11.73	
LEGAL LOAD RATING	SINGLE VEHICLE (SV)	SNSH	13.500		2.72	36.72	1.40	2.74	1	TOP SLAB	6.67	2.72	1	TOP SLAB	11.73	
		SNGARBS2	20.000		2.55	51.00	1.40	2.56	1	TOP SLAB	6.67	2.55	1	TOP SLAB	11.73	
		SNAGRIS2	22.000		2.72	59.84	1.40	2.74	1	TOP SLAB	6.67	2.72	1	TOP SLAB	11.73	
		SNCOTTS3	27.250		1.45	39.51	1.40	1.75	1	TOP SLAB	6.67	1.45	1	TOP SLAB	11.73	
		SNAGGRS4	34.925		1.57	54.83	1.40	1.91	1	TOP SLAB	6.67	1.57	1	BOTTOM SLAB	1.45	
		SNS5A	35.550	3	1.43	50.84	1.40	1.85	1	BOTTOM SLAB	6.67	1.43	1	BOTTOM SLAB	1.45	
		SNS6A	39.950		1.43	57.13	1.40	1.85	1	BOTTOM SLAB	6.67	1.43	1	BOTTOM SLAB	1.45	
		SNS7B	42.000		1.43	60.06	1.40	1.85	1	BOTTOM SLAB	6.67	1.43	1	BOTTOM SLAB	1.45	
	TRUCK TRACTOR SEMI-TRAILER (TTST)	TNAGRIT3	33.000		1.91	63.03	1.40	2.33	1	WALL	1.08	1.91	1	BOTTOM SLAB	1.45	
		TNT4A	33.075		1.73	57.22	1.40	2.08	1	TOP SLAB	6.67	1.73	1	TOP SLAB	11.73	
		TNT6A	41.600		1.62	67.39	1.40	1.91	1	TOP SLAB	6.67	1.62	1	TOP SLAB	11.73	
		TNT7A	42.000		1.67	70.14	1.40	2.01	1	TOP SLAB	6.67	1.67	1	TOP SLAB	11.73	
		TNT7B	42.000		1.43	60.06	1.40	1.89	1	BOTTOM SLAB	6.67	1.43	1	BOTTOM SLAB	1.45	
		TNAGRIT4	43.000		1.73	74.39	1.40	2.08	1	TOP SLAB	6.67	1.73	1	TOP SLAB	11.73	
		TNAGT5A	45.000		1.73	77.85	1.40	2.08	1	TOP SLAB	6.67	1.73	1	TOP SLAB	11.73	
		TNAGT5B	45.000		1.73	77.85	1.40	2.08	1	TOP SLAB	6.67	1.73	1	TOP SLAB	11.73	

LOAD FACTORS:

DESIGN LOAD RATING FACTORS

LOAD TYPE	MAX FACTOR	MIN FACTOR
DC	1.25	0.90
DW	1.50	0.65
EV	1.30	0.90
EH	1.35	0.90
ES	1.35	0.90
LS	1.75	--
WA	1.00	--

NOTE:

RATING FACTORS ARE BASED ON THE STRENGTH I LIMIT STATE.

COMMENTS:

1.
2.
3.
4.

(#) CONTROLLING LOAD RATING

(1) DESIGN LOAD RATING (HL-93)

(2) DESIGN LOAD RATING (HS-20)

(3) LEGAL LOAD RATING **

** SEE CHART FOR VEHICLE TYPE

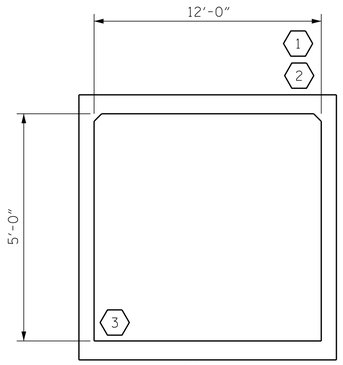

BOX 1

LRFR SUMMARY

(LOOKING DOWNSTREAM)

PROJECT NO. B-6002

EDGECOMBE COUNTY

STATION: 13+40.00 -L-

ENGINEER OF RECORD
5/20/2019

NORTH CAROLINA PROFESSIONAL SEAL 22072 ENGINEER JOHN ARTHUR DILWORTH

DocuSigned by: John Arthur Dilworth

WETHERILL ENGINEERING

1223 Jones Franklin Rd.
Raleigh, N.C. 27606
Bus: 919 851 8077
Fax: 919 851 8107
LICENSE NO. F-0377

STATE OF NORTH CAROLINA
DEPARTMENT OF TRANSPORTATION
RALEIGH

STANDARD

LRFR SUMMARY FOR REINFORCED CONCRETE BOX CULVERTS
(NON-INTERSTATE TRAFFIC)

REVISIONS						SHEET NO.
NO.	BY:	DATE:	NO.	BY:	DATE:	CO1-2
1			3			TOTAL SHEETS
2			4			5

DOCUMENT NOT CONSIDERED FINAL UNLESS ALL SIGNATURES COMPLETED

DRAWN BY : J. PENDERGRAFT DATE : 4-19
CHECKED BY : J. DILWORTH DATE : 4-19

P:\2018\18133.01_EDGECOMBE_64\Structures\DGN\CULVERT\EDGECOMBE 64 _SMU_CU.dgn
5/20/2019 8:22:21 AM

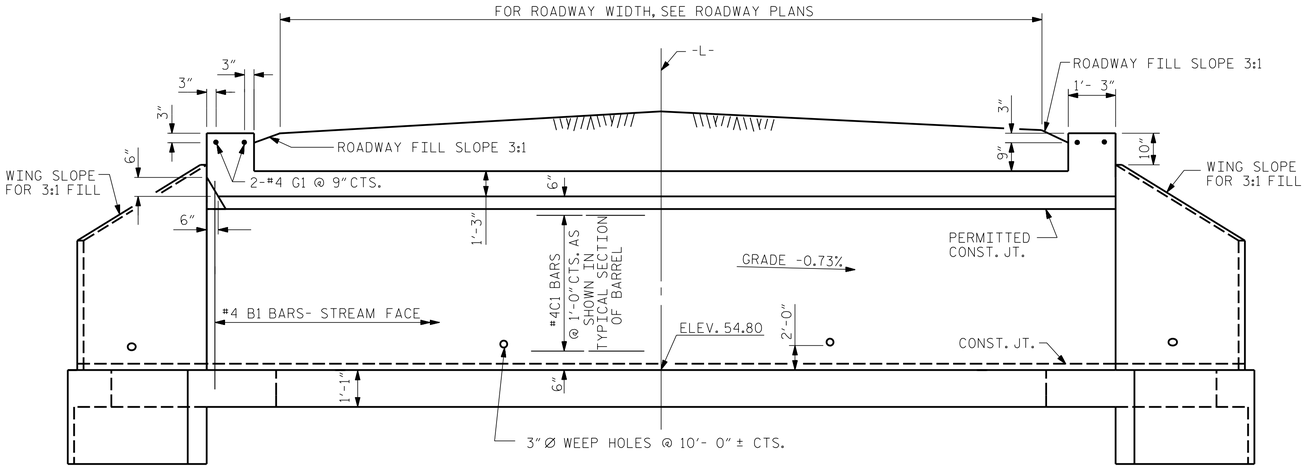

CULVERT SECTION NORMAL TO ROADWAY

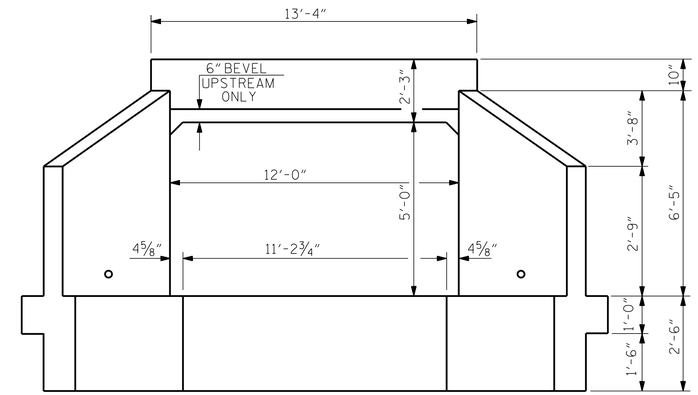

END ELEVATION

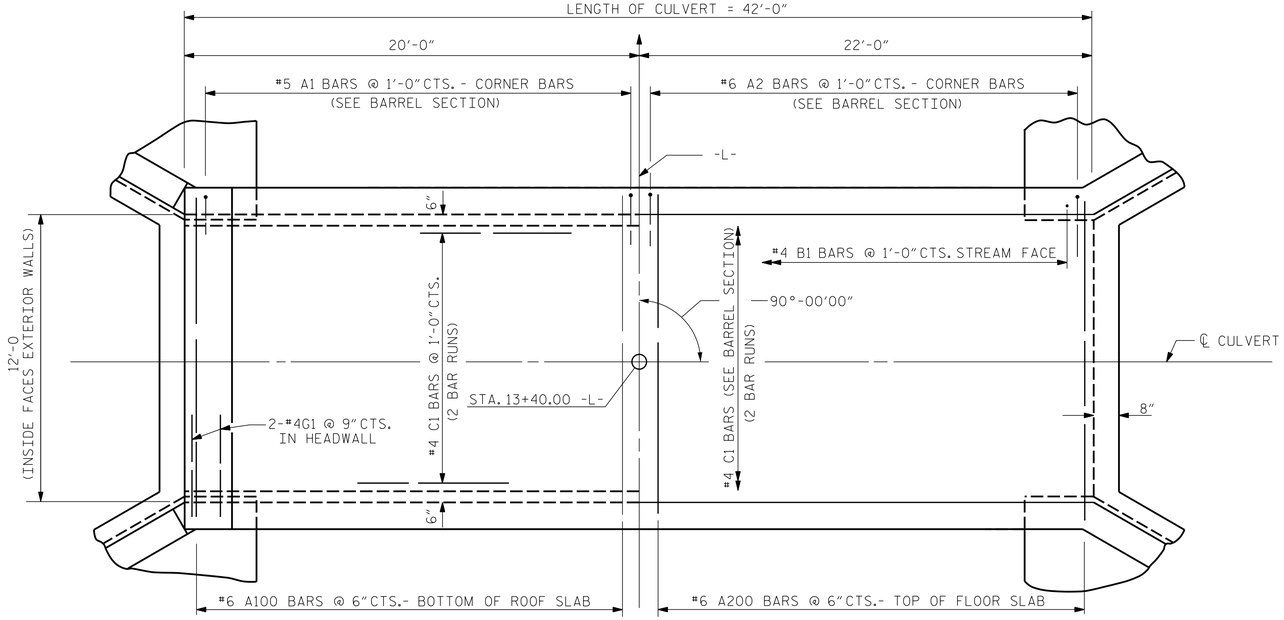

PART PLAN ROOF SLAB

PART PLAN FLOOR SLAB

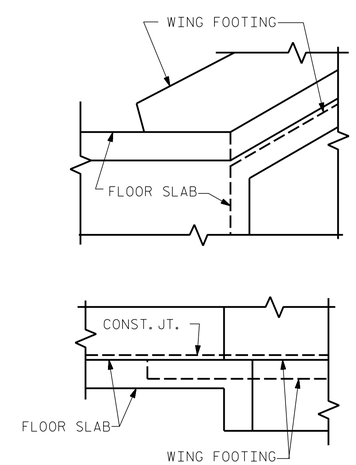

DETAIL

CONNECTION OF WING FOOTING AND FLOOR SLAB WHEN SLAB IS THICKER THAN FOOTING

PROJECT NO. B-6002

EDGECOMBE COUNTY

STATION: 13+40.00 -L-

ENGINEER OF RECORD
5/20/2019

NORTH CAROLINA PROFESSIONAL SEAL 22072 ENGINEER JOHN ARTHUR DILWORTH

DocuSigned by: John Arthur Dilworth

WETHERILL ENGINEERING

1223 Jones Franklin Rd.
Raleigh, N.C. 27606
Bus: 919 851 8077
Fax: 919 851 8107
LICENSE NO. F-0377

STATE OF NORTH CAROLINA
DEPARTMENT OF TRANSPORTATION
RALEIGH

BARREL STANDARD
SINGLE 12 FT. X 5 FT.
CONCRETE BOX CULVERT
90° SKEW

REVISIONS						SHEET NO.
NO.	BY:	DATE:	NO.	BY:	DATE:	C01-3
1			3			TOTAL SHEETS
2			4			5

STD. NO. CB11

ASSEMBLED BY : J. PENDERGRAFT	DATE : 4-19	SPECIAL	
CHECKED BY : J. DILWORTH	DATE : 4-19		
DRAWN BY : R. WRIGHT	DATE : AUG. 1989	STANDARD	
CHECKED BY : A.R. BISSETTE	DATE : AUG. 1989		

DOCUMENT NOT CONSIDERED FINAL UNLESS ALL SIGNATURES COMPLETED

P:\2018\18133.01_EDGECOMBE_64\Structures\DGN\CULVERT\EDGECOMBE 64 _SMU_CU.dgn
5/20/2019 8:24:53 AM

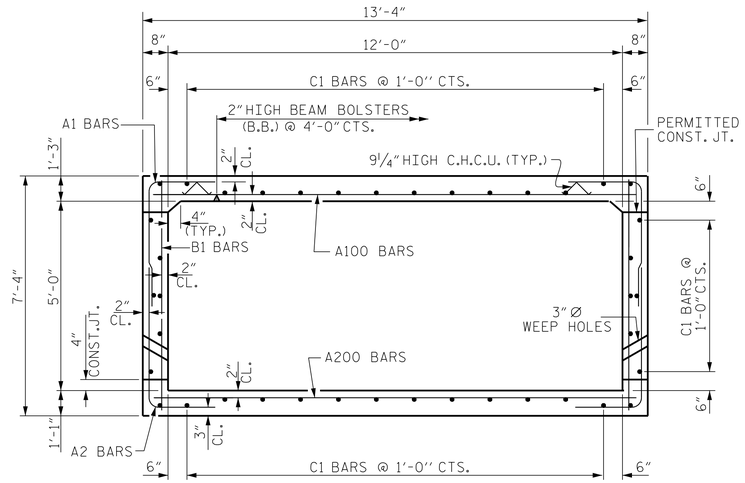

RIGHT ANGLE SECTION OF BARREL

THERE ARE 40 "C" BARS IN SECTION OF BARREL

BAR TYPES

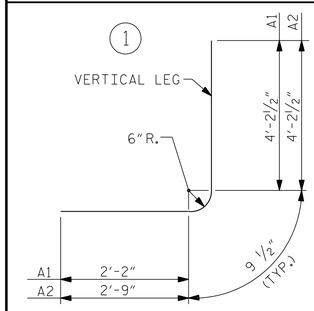

ALL BAR DIMENSIONS ARE OUT TO OUT.

BILL OF MATERIAL

BAR	NO.	SIZE	TYPE	LENGTH	WEIGHT
A1	84	#5	1	7'-2"	628
A2	84	#6	1	7'-9"	978
A100	84	#6	STR.	13'-0"	1640
A200	84	#6	STR.	13'-0"	1640
B1	84	#4	STR.	6'-11"	388
C1	80	#4	STR.	21'-10"	1167
G1	4	#4	STR.	13'-0"	35
REINFORCING STEEL					6476 LBS

SPLICE LENGTHS CHART

BAR	SIZE	SPLICE LENGTH
B1	4	1'-9"
C1	4	1'-11"

PROJECT NO. B-6002

EDGECOMBE COUNTY

STATION: 13+40.00 -L-

DRAWN BY : J. PENDERGRAFT DATE : 4-19

CHECKED BY : J. DILWORTH DATE : 4-19

DOCUMENT NOT CONSIDERED FINAL UNLESS ALL SIGNATURES COMPLETED

ENGINEER OF RECORD
5/20/2019

NORTH CAROLINA PROFESSIONAL SEAL 22072 ENGINEER JOHN ARTHUR DILWORTH

DocuSigned by: John Arthur Dilworth

WETHERILL ENGINEERING

1223 Jones Franklin Rd.
Raleigh, N.C. 27606
Bus: 919 851 8077
Fax: 919 851 8107
LICENSE NO. F-0377

STATE OF NORTH CAROLINA
DEPARTMENT OF TRANSPORTATION
RALEIGH

BARREL REINFORCEMENT SINGLE 12 FT. X 5 FT. CONCRETE BOX CULVERT 90° SKEW

REVISIONS						
NO.	BY:	DATE:	NO.	BY:	DATE:	
1			3			
2			4			

SHEET NO. C01-4

TOTAL SHEETS 5

P:\2018\18133.01_EDGECOMBE_64\Structures\DGN\CULVERT\EDGECOMBE 64 _SMU_CU.dgn
5/20/2019 8:31:31 AM

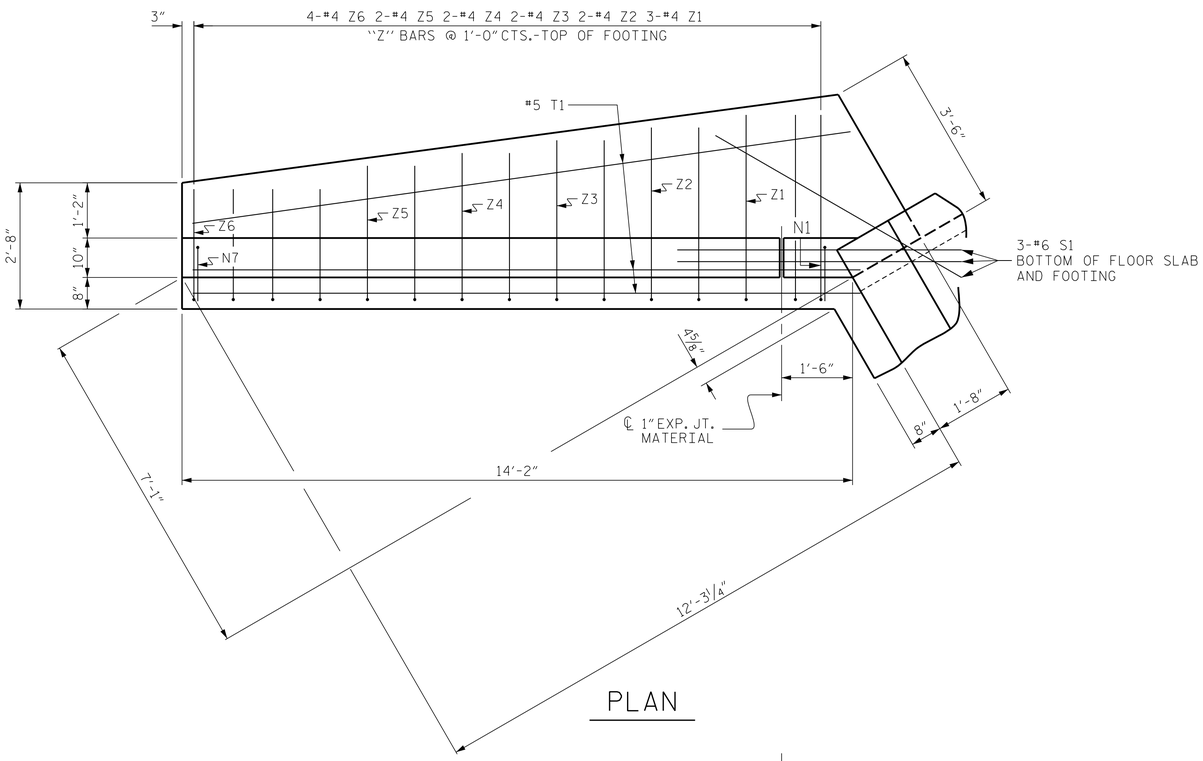

PLAN

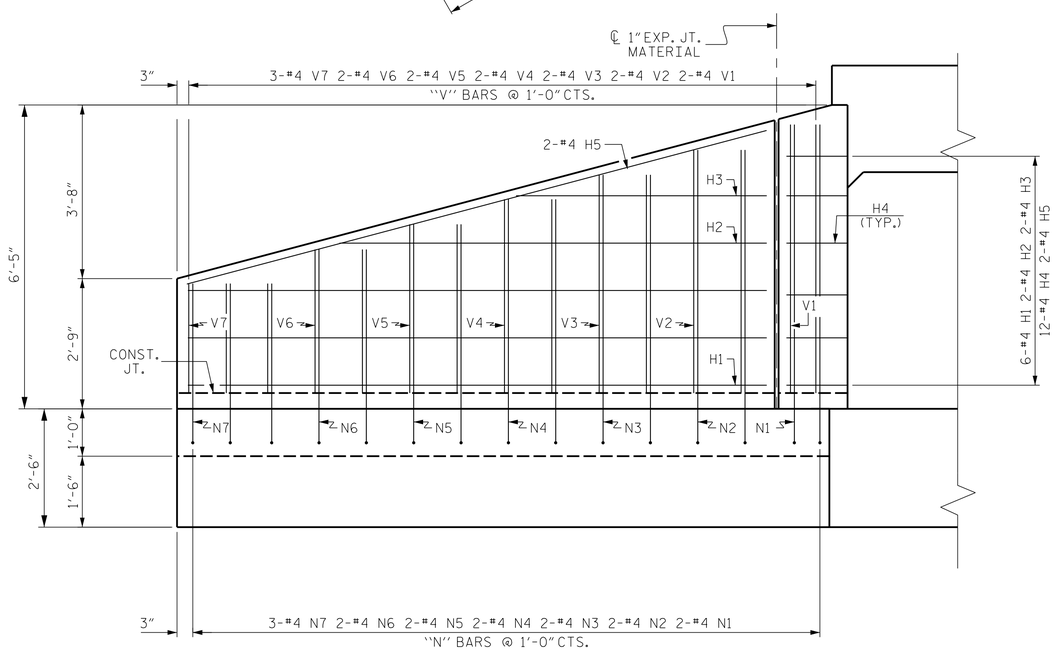

ELEVATION

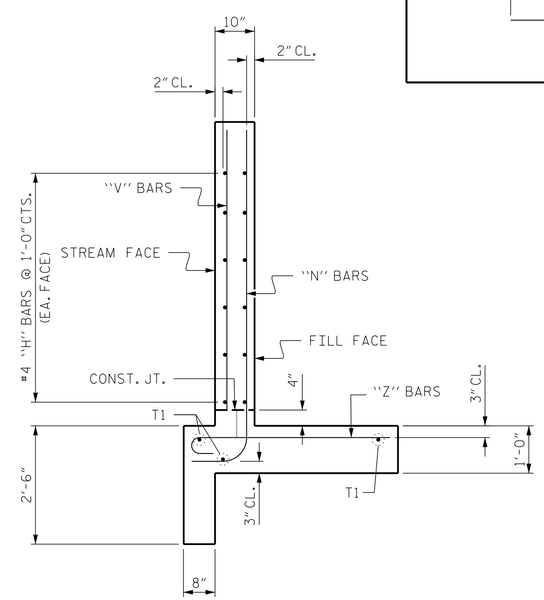

TYPICAL WING SECTION

BAR TYPES

ALL BAR DIMENSIONS ARE OUT TO OUT.

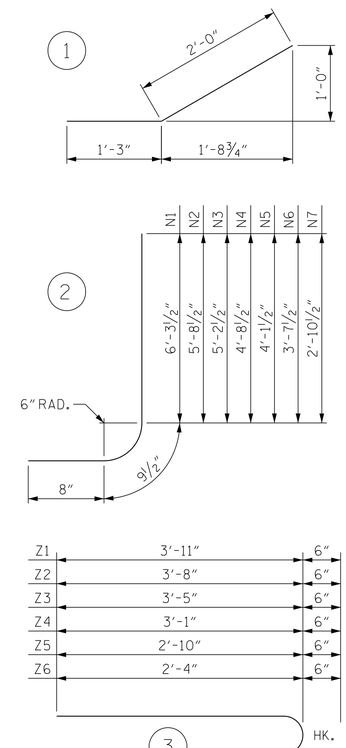

BILL OF MATERIAL

BAR	NO.	SIZE	TYPE	LENGTH	WEIGHT
H1	24	#4	STR	12'-2"	195
H2	8	#4	STR	9'-0"	48
H3	8	#4	STR	5'-3"	28
H4	48	#4	1	3'-3"	104
H5	8	#4	STR	12'-8"	68
N1	8	#4	2	7'-9"	41
N2	8	#4	2	7'-2"	38
N3	8	#4	2	6'-8"	36
N4	8	#4	2	6'-2"	33
N5	8	#4	2	5'-7"	30
N6	8	#4	2	5'-1"	27
N7	12	#4	2	4'-4"	35
S1	12	#6	STR	6'-0"	108
T1	12	#5	STR	14'-1"	176
V1	8	#4	STR	5'-8"	30
V2	8	#4	STR	5'-1"	27
V3	8	#4	STR	4'-7"	24
V4	8	#4	STR	4'-1"	22
V5	8	#4	STR	3'-6"	19
V6	8	#4	STR	3'-0"	16
V7	12	#4	STR	2'-3"	18
Z1	12	#4	3	4'-5"	35
Z2	8	#4	3	4'-2"	22
Z3	8	#4	3	3'-11"	21
Z4	8	#4	3	3'-7"	19
Z5	8	#4	3	3'-4"	18
Z6	16	#4	3	2'-10"	30

REINFORCING STEEL
FOR 4 WINGS 1268 LBS

CLASS A CONCRETE
4 WINGS 17.8 CY
2 HEADWALLS 1.2 CY
END CURTAIN WALLS 1.4 CY
TOTAL 20.4 CY

PROJECT NO. B-6002
EDGECOMBE COUNTY
STATION: 13+40.00 -L-

SHEET 5 OF 5

ENGINEER OF RECORD
5/20/2019

NORTH CAROLINA PROFESSIONAL SEAL 22072 ENGINEER JOHN ARTHUR DILWORTH

DocuSigned by: John Arthur Dilworth

ETHERILL ENGINEERING
1223 Jones Franklin Rd.
Raleigh, N.C. 27606
Bus: 919 851 8077
Fax: 919 851 8107
LICENSE NO. F-0377

STATE OF NORTH CAROLINA
DEPARTMENT OF TRANSPORTATION
RALEIGH

WINGS FOR CONCRETE BOX CULVERT

H = 5'-0" SLOPE = 3:1
90° SKEW

REVISIONS								SHEET NO.
NO.	BY:	DATE:	NO.	BY:	DATE:			C01-5
1			3					TOTAL SHEETS
2			4					5

DRAWN BY : A.J. KLINK DATE : 4/19
CHECKED BY : J.A. DILWORTH DATE : 4/19

DOCUMENT NOT CONSIDERED FINAL UNLESS ALL SIGNATURES COMPLETED

P:\2018\18133.01_EDGECOMBE_64\Structures\DGN\CULVERT\EDGECOMBE_64_SMU_W1.dgn
5/20/2019 8:38:18 AM

STANDARD NOTES

DESIGN DATA:

SPECIFICATIONS	A.A.S.H.T.O. (CURRENT)
LIVE LOAD	SEE PLANS
IMPACT ALLOWANCE	SEE A.A.S.H.T.O.
STRESS IN EXTREME FIBER OF STRUCTURAL STEEL - AASHTO M270 GRADE 36	20,000 LBS. PER SQ. IN.
- AASHTO M270 GRADE 50W	27,000 LBS. PER SQ. IN.
- AASHTO M270 GRADE 50	27,000 LBS. PER SQ. IN.
REINFORCING STEEL IN TENSION - GRADE 60	24,000 LBS. PER SQ. IN.
CONCRETE IN COMPRESSION	1,200 LBS. PER SQ. IN.
CONCRETE IN SHEAR	SEE A.A.S.H.T.O.
STRUCTURAL TIMBER - TREATED OR UNTREATED EXTREME FIBER STRESS	1,800 LBS. PER SQ. IN.
COMPRESSION PERPENDICULAR TO GRAIN OF TIMBER	375 LBS. PER SQ. IN.
EQUIVALENT FLUID PRESSURE OF EARTH	30 LBS. PER CU. FT. (MINIMUM)

MATERIAL AND WORKMANSHIP:

EXCEPT AS MAY OTHERWISE BE SPECIFIED ON PLANS OR IN THE SPECIAL PROVISIONS, ALL MATERIAL AND WORKMANSHIP SHALL BE IN ACCORDANCE WITH THE 2018 "STANDARD SPECIFICATIONS FOR ROADS AND STRUCTURES" OF THE N. C. DEPARTMENT OF TRANSPORTATION.

STEEL SHEET PILING FOR PERMANENT OR TEMPORARY APPLICATIONS SHALL BE HOT ROLLED.

CONCRETE:

UNLESS OTHERWISE REQUIRED ON PLANS, CLASS A CONCRETE SHALL BE USED FOR ALL PORTIONS OF ALL STRUCTURES WITH THE EXCEPTION THAT: CLASS AA CONCRETE SHALL BE USED IN BRIDGE SUPERSTRUCTURES, ABUTMENT BACKWALLS, AND APPROACH SLABS; AND CLASS B CONCRETE SHALL BE USED FOR SLOPE PROTECTION AND RIP RAP.

CONCRETE CHAMFERS:

UNLESS OTHERWISE NOTED ON THE PLANS, ALL EXPOSED CORNERS ON STRUCTURES SHALL BE CHAMFERED 3/4" WITH THE FOLLOWING EXCEPTIONS: TOP CORNERS OF CURBS MAY BE ROUNDED TO 1 1/2" RADIUS WHICH IS BUILT INTO CURB FORMS; CORNERS OF TRANSVERSE FLOOR EXPANSION JOINTS SHALL BE ROUNDED WITH A 1/4" FINISHING TOOL UNLESS OTHERWISE REQUIRED ON PLANS; AND CORNERS OF EXPANSION JOINTS IN THE ROADWAY FACES AND TOPS OF CURBS AND SIDEWALKS SHALL BE ROUNDED TO A 1/4" RADIUS WITH A FINISHING STONE OR TOOL UNLESS OTHERWISE REQUIRED ON PLANS.

DOWELS:

DOWELS WHEN INDICATED ON PLANS AS FOR CULVERT EXTENSIONS, SHALL BE EMBEDDED AT LEAST 12" INTO THE OLD CONCRETE AND GROUTED INTO PLACE WITH 1:2 CEMENT MORTAR.

ALLOWANCE FOR DEAD LOAD DEFLECTION, SETTLEMENT, ETC. IN CASTING SUPERSTRUCTURES:

BRIDGES SHALL BE BUILT ON THE GRADE OR VERTICAL CURVE SHOWN ON PLANS. SLABS, CURBS AND PARAPETS SHALL CONFORM TO THE GRADE OR CURVE.

ALL DIMENSIONS WHICH ARE GIVEN IN SECTION AND ARE AFFECTED BY DEAD LOAD DEFLECTIONS ARE DIMENSIONS AT CENTER LINE OF BEARING UNLESS OTHERWISE NOTED ON PLANS. IN SETTING FORMS FOR STEEL BEAM BRIDGES AND PRESTRESSED CONCRETE GIRDER BRIDGES, ADJUSTMENTS SHALL BE MADE DUE TO THE DEAD LOAD DEFLECTIONS FOR THE ELEVATIONS SHOWN. WHERE BLOCKS ARE SHOWN OVER BEAMS FOR BUILDING UP TO THE SLAB, THE VERTICAL DIMENSIONS OF THE BLOCKS SHALL BE ADJUSTED BETWEEN BEARINGS TO COMPENSATE FOR DEAD LOAD DEFLECTIONS, VERTICAL CURVE ORDINATE, AND ACTUAL BEAM CAMBER. WHERE BOTTOM OF SLAB IS IN LINE WITH BOTTOM OF TOP FLANGES, DEPTH OF SLAB BETWEEN BEARINGS SHALL BE ADJUSTED TO COMPENSATE FOR DEAD LOAD DEFLECTION, VERTICAL CURVE ORDINATE, AND ACTUAL BEAM CAMBER.

IN SETTING FALSEWORK AND FORMS FOR REINFORCED CONCRETE SPANS, AN ALLOWANCE SHALL BE MADE FOR DEAD LOAD DEFLECTIONS, SETTLEMENT OF FALSEWORK, AND PERMANENT CAMBER WHICH SHALL BE PROVIDED FOR IN ADDITION TO THE ELEVATIONS SHOWN. AFTER REMOVAL OF THE FALSEWORK, THE FINISHED STRUCTURES SHALL CONFORM TO THE PROFILE AND ELEVATIONS SHOWN ON THE PLANS AND CONSTRUCTION ELEVATIONS FURNISHED BY THE ENGINEER.

DETAILED DRAWINGS FOR FALSEWORK OR FORMS FOR BRIDGE SUPERSTRUCTURE AND ANY STRUCTURE OR PARTS OF A STRUCTURE AS NOTED ON THE PLANS SHALL BE SUBMITTED TO THE ENGINEER FOR APPROVAL BEFORE CONSTRUCTION OF THE FALSEWORK OR FORMS IS STARTED.

REINFORCING STEEL:

ALL REINFORCING STEEL SHALL BE DEFORMED. DIMENSIONS RELATIVE TO PLACEMENT OF REINFORCING ARE TO CENTERS OF BARS UNLESS OTHERWISE INDICATED IN THE PLANS. DIMENSIONS ON BAR DETAILS ARE TO CENTERS OF BARS OR ARE OUT TO OUT AS INDICATED ON PLANS.

WIRE BAR SUPPORTS SHALL BE PROVIDED FOR REINFORCING STEEL WHERE INDICATED ON THE PLANS. WHEN BAR SUPPORT PIECES ARE PLACED IN CONTINUOUS LINES, THEY SHALL BE SO PLACED THAT THE ENDS OF THE SUPPORTING WIRES SHALL BE LAPPED TO LOCK LEGS ON ADJOINING PIECES.

STRUCTURAL STEEL:

AT THE CONTRACTOR'S OPTION, HE MAY SUBSTITUTE 7/8" Ø SHEAR STUDS FOR THE 3/4" Ø STUDS SPECIFIED ON THE PLANS. THIS SUBSTITUTION SHALL BE MADE AT THE RATE OF 3 - 7/8" Ø STUDS FOR 4 - 3/4" Ø STUDS, AND STUD SPACING CHANGES SHALL BE MADE AS NECESSARY TO PROVIDE THE SAME EQUIVALENT NUMBER OF 7/8" Ø STUDS ALONG THE BEAM AS SHOWN FOR 3/4" Ø STUDS BASED ON THE RATIO OF 3 - 7/8" Ø STUDS FOR 4 - 3/4" Ø STUDS. STUDS OF THE LENGTH SPECIFIED ON THE PLANS MUST BE PROVIDED. THE MAXIMUM SPACING SHALL BE 2'-0".

EXCEPT AT THE INTERIOR SUPPORTS OF CONTINUOUS BEAMS WHERE THE COVER PLATE IS IN CONTACT WITH BEARING PLATE, THE CONTRACTOR MAY, AT HIS OPTION, SUBSTITUTE FOR THE COVER PLATES DESIGNATED ON THE PLANS COVER PLATES OF THE EQUIVALENT AREA PROVIDED THESE PLATES ARE AT LEAST 5/16" IN THICKNESS AND DO NOT EXCEED A WIDTH EQUAL TO THE FLANGE WIDTH LESS 2" OR A THICKNESS EQUAL TO 2 TIMES THE FLANGE THICKNESS. THE SIZE OF FILLET WELDS SHALL CONFORM TO THE REQUIREMENTS OF THE CURRENT ANSI/AASHTO/AWS "BRIDGE WELDING CODE". ELECTROSLAG WELDING WILL NOT BE PERMITTED.

WITH THE SOLE EXCEPTION OF EDGES AT SURFACES WHICH BEAR ON OTHER SURFACES, ALL SHARP EDGES AND ENDS OF SHAPES AND PLATES SHALL BE SLIGHTLY ROUNDED BY SUITABLE MEANS TO A RADIUS OF APPROXIMATELY 1/16 INCH OR EQUIVALENT FLAT SURFACE AT A SUITABLE ANGLE PRIOR TO PAINTING, GALVANIZING, OR METALLIZING.

HANDRAILS AND POSTS:

METAL STANDARDS AND FACES OF THE CONCRETE END POSTS FOR THE METAL RAIL SHALL BE SET NORMAL TO THE GRADE OF THE CURB, UNLESS OTHERWISE SHOWN ON PLANS. THE METAL RAIL AND TOPS OF CONCRETE POSTS USED WITH THE ALUMINUM RAIL SHALL BE BUILT PARALLEL TO THE GRADE OF THE CURB.

METAL HANDRAILS SHALL BE IN ACCORDANCE WITH THE PLANS. RAILS SHALL BE AS MANUFACTURED FOR BRIDGE RAILING. CASTINGS SHALL BE OF A UNIFORM APPEARANCE. FINS AND OTHER DEFORMATIONS RESULTING FROM CASTING OR OTHERWISE SHALL BE REMOVED IN A MANNER SO THAT A UNIFORM COLORING OF THE COMPLETED CASTING SHALL BE OBTAINED. CASTINGS WITH DISCOLORATIONS OR OF NON-UNIFORM COLORING WILL NOT BE ACCEPTED. CERTIFIED MILL REPORTS ARE REQUIRED FOR METAL RAILS AND POSTS.

SPECIAL NOTES:

GENERALLY, IN CASE OF DISCREPANCY, THIS STANDARD SHEET OF NOTES SHALL GOVERN OVER THE SPECIFICATIONS, BUT THE REMAINDER OF THE PLANS SHALL GOVERN OVER NOTES HEREON, AND SPECIAL PROVISIONS SHALL GOVERN OVER ALL. SEE SPECIFICATIONS ARTICLE 105-4.

ENGLISH

JANUARY, 1990

STD. NO. SN