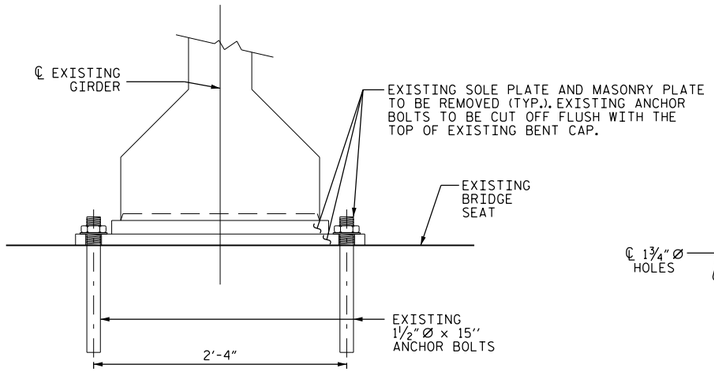


CONTRACTOR TO VERIFY EXISTING CONDITIONS. NOTIFY ENGINEER IF CONDITIONS VARY SIGNIFICANTLY FROM THOSE SHOWN ON PLANS AND MAY AFFECT THE IMPLIMENTATION OF REPAIRS.

END VIEW (EXISTING)

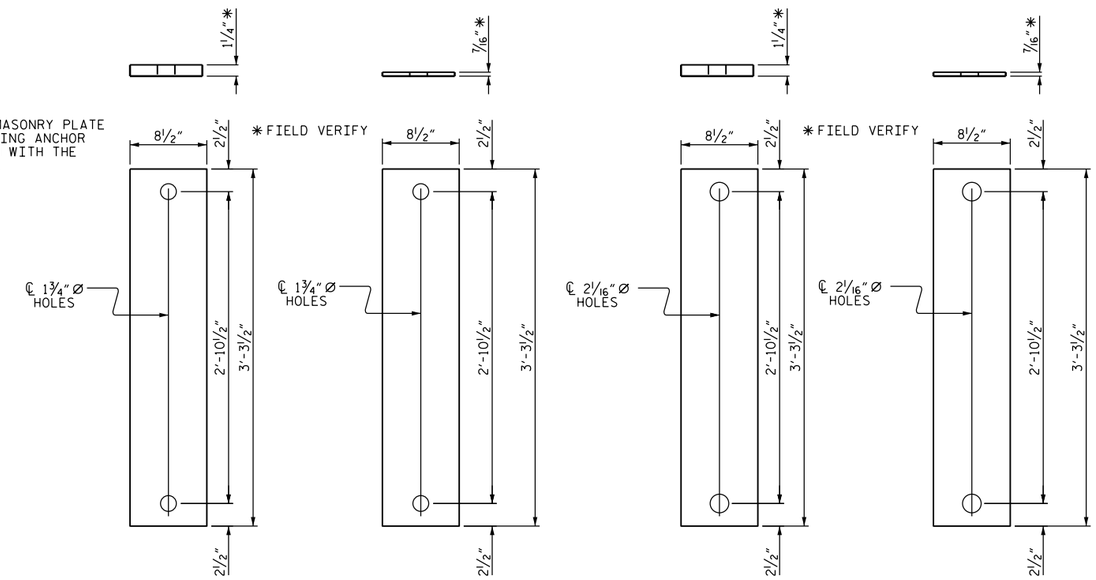


MASONRY PLATES | FILLER PLATES | MASONRY PLATES | FILLER PLATES

AT LOCATIONS WHERE FILL PLATE "M2" OR "M4" IS REQUIRED, THE CONTRACTOR MAY ELECT TO FABRICATE A MASONRY PLATE OF THICKNESS 1 11/16" TO REPLACE PLATE THE MASONRY AND FILLER PLATE.

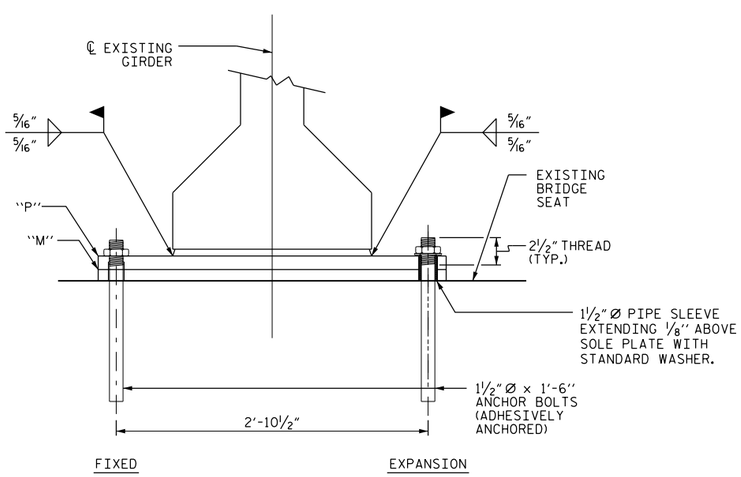


END VIEW (PROPOSED)
(64 ANCHOR BOLTS REQUIRED)

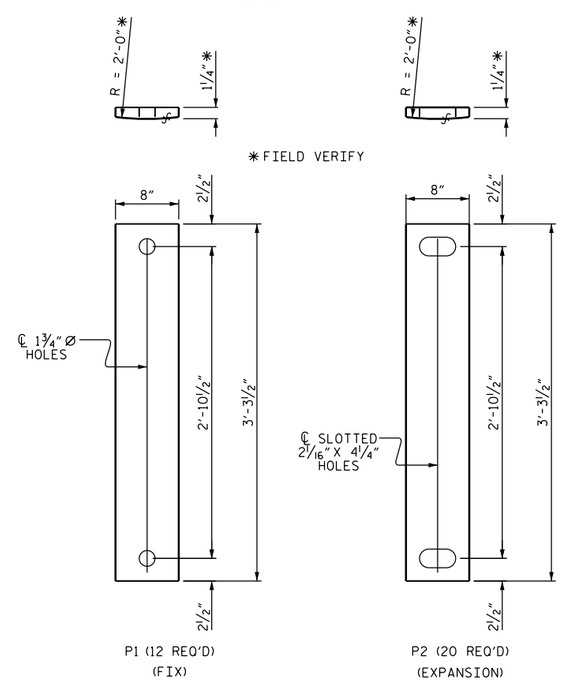


SOLE PLATES

## NOTES

THE EXISTING BEARINGS DETERMINED FOR REPLACEMENT SHALL BE REMOVED AND REPLACED WITH BEARINGS AS SHOWN.

AT ALL FIXED POINTS OF SUPPORT, NUTS FOR ANCHOR BOLTS ARE TO BE TIGHTENED FINGER TIGHT AND THEN BACKED OFF ½ TURN. THE THREAD OF THE NUT AND BOLT SHALL THEN BE BURRED WITH A SHARP POINTED TOOL.

MASONRY PLATES, SOLE PLATES, ANCHOR BOLTS, NUTS AND WASHERS SHALL BE GALVANIZED IN ACCORDANCE WITH THE STANDARD SPECIFICATIONS.

ANCHOR BOLTS SHALL MEET THE REQUIREMENTS OF ASTM A449. NUTS SHALL MEET THE REQUIREMENTS OF AASHTO M291-DH OR AASHTO M292-2H. WASHERS SHALL MEET THE REQUIREMENTS OF AASHTO M293. SHOP DRAWINGS ARE NOT REQUIRED FOR ANCHOR BOLTS, NUTS AND WASHERS. SHOP INSPECTION IS REQUIRED.

ANCHOR BOLTS SHALL BE ALL-THREADED OR SWEDGED OR DEFORMED BELOW REQUIRED THREAD LENGTH.

ALL WELDING SHALL BE IN ACCORDANCE WITH CURRENT APPLICABLE AWS AND NCDOT STANDARD SPECIFICATIONS.

ALL WELDS WILL BE INSPECTED AND TESTED BY THE NCDOT MATERIALS AND TEST UNIT IN ACCORDANCE WITH THE CURRENT AWS BRIDGE WELDING CODE AND STANDARD SPECIFICATIONS.

ALL SURFACES OF BEARING PLATES SHALL BE SMOOTH AND STRAIGHT.

THE CONTRACTOR SHALL CORE INTO EXISTING BENT CAP TO INSTALL 1½" ANCHOR BOLTS. BOLTS SHALL BE ADHESIVELY ANCHORED; SEE STANDARD SPECIFICATIONS. ADHESIVE FOR NEW ANCHOR BOLTS SHALL BE AN NCDOT-APPROVED PRODUCT. FIELD TESTING WILL NOT BE REQUIRED FOR INSTALLATION OF ADHESIVELY ANCHORED BOLTS.

AT LOCATIONS WHERE FILLER PLATES ARE REQUIRED, FILLER PLATE SHALL BE INSTALLED BETWEEN CONCRETE CAP AND MASONRY PLATE.

BEARING ASSEMBLIES LOCATED AT THE END BENTS SHALL BE CLEANED FREE OF ANY RUST AND DEBRIS AND PAINTED AS SPECIFIED IN "CLEAN AND PAINTING EXISTING BEARING PLATES" SPECIAL PROVISION.

## ANTICIPATED BEARING REPLACEMENT LOCATIONS

| SPAN | LOCATION | REQ'D PLATES |
|---|---|---|
| A | 4 ASSYS @ BENT#1 | M3, M4, P2 |
| B | 4 ASSYS @ BENT#1 | M3, P2 |
| B | 4 ASSYS @ BENT#2 | M1, M2, P1 |
| C | 4 ASSYS @ BENT#2 | M3, P2 |
| C | 4 ASSYS @ BENT#3 | M1, M2, P1 |
| D | 4 ASSYS @ BENT#3 | M3, P2 |
| D | 4 ASSYS @ BENT#4 | M1, M2, P1 |
| E | 4 ASSYS @ BENT#4 | M3, P2 |

PROJECT NO. BP-5500H
JOHNSTON COUNTY
BRIDGE NO. 2

DocuSigned by:
William M. Clarke
1EB20097EAAF437...

4/10/15

NORTH CAROLINA PROFESSIONAL SEAL 40257 ENGINEER W. MATTHEW CLARKE

STATE OF NORTH CAROLINA
DEPARTMENT OF TRANSPORTATION
RALEIGH

BEARING REPAIR DETAILS

| REVISIONS | | | | | | SHEET NO. |
|---|---|---|---|---|---|---|
| NO. | BY: | DATE: | NO. | BY: | DATE: | S-12 |
| 1 | | | 3 | | | TOTAL SHEETS |
| 2 | | | 4 | | | 33 |

DRAWN BY : P. BRYANT / S. T. SANDOR DATE : 8/14
CHECKED BY : W.M. CLARKE DATE : 8/14

10-APR-2015 08:35
S:\PRS\PDC\Squad C\Preservation_Projects\BP-5500\H\500002_SD_TOTAL.dgn
malee7