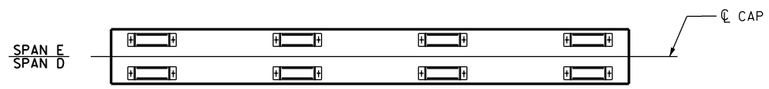


PLAN
TOP OF CAP

## REPAIR QUANTITY TABLE

| REPAIRS BENT 4 | QUANTITIES | | | |
|---|---|---|---|---|
| | ESTIMATE | | ACTUAL | |
| CONCRETE REPAIRS | AREA SF | VOLUME CF | AREA SF | VOLUME CF |
| CAP (VERTICAL FACE) | 1.0 | 0.4 | | |
| CAP (HORIZONTAL, CORNER) | - | - | | |
| COLUMN | - | - | | |
| EPOXY RESIN INJECTION | | LN. FT | | LN. FT |
| CAP | | - | | |
| COLUMN | | - | | |

VALUES IN CHART REPRESENT ESTIMATED REPAIR TOTALS AFTER REMOVAL OF UNSOUND CONCRETE, MIN. OF 1" BEHIND REBAR AND MIN. 1" CL TO SAWCUT. SEE REPAIR DETAILS.

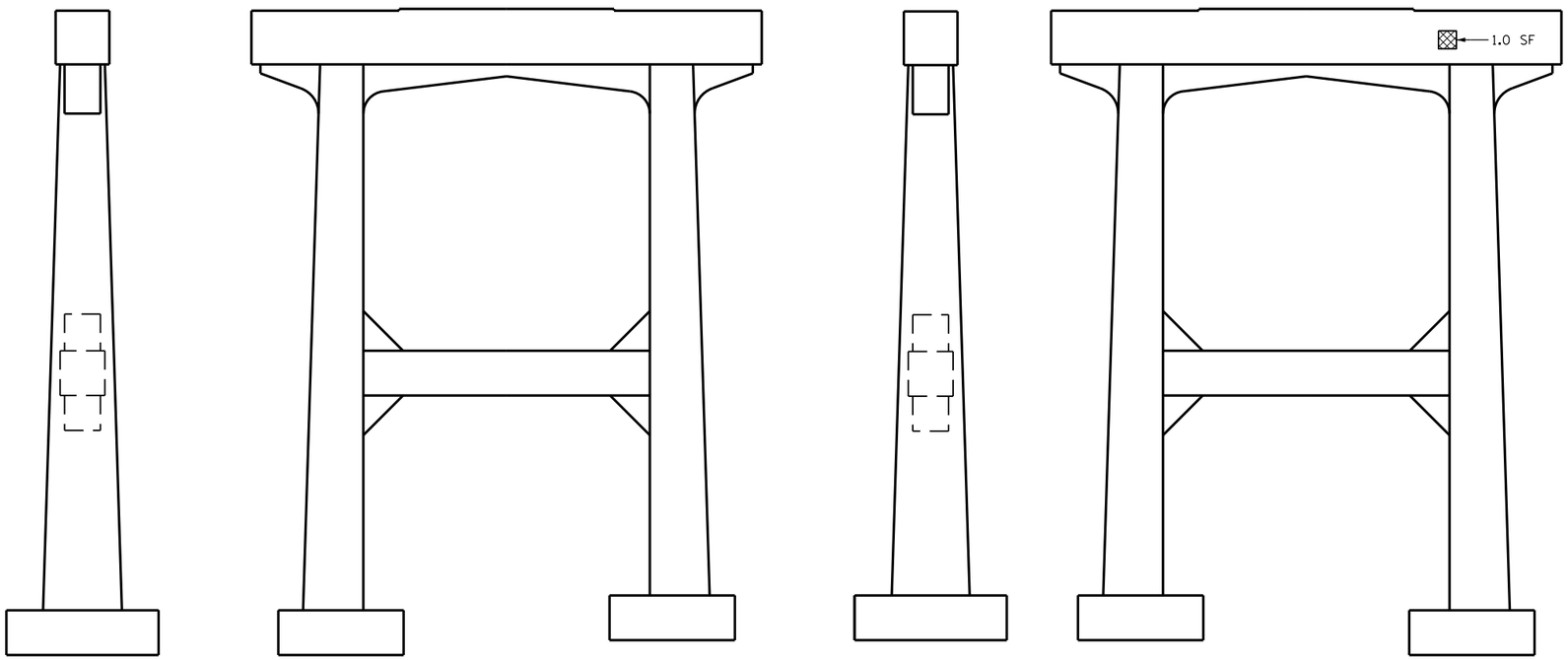


ELEVATION
NORTH FACE

ELEVATION
WEST FACE

ELEVATION
SOUTH FACE

ELEVATION
EAST FACE

SHOTCRETE REPAIRS

CONCRETE REPAIRS

ERI EPOXY RESIN INJECTION

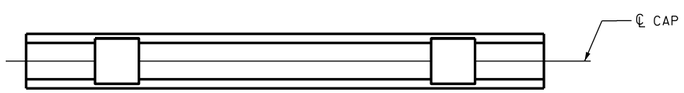


PLAN
BOTTOM OF CAP

PROJECT NO. BP-5500H
JOHNSTON COUNTY
BRIDGE NO. 2
SHEET 5 OF 5

DocuSigned by:
William M. Clarke
1EB20097EAAF437...

4/10/15

NORTH CAROLINA PROFESSIONAL SEAL 40257 ENGINEER W. MATTHEW CLARKE

STATE OF NORTH CAROLINA
DEPARTMENT OF TRANSPORTATION
RALEIGH

SUBSTRUCTURE
BENT 4

| REVISIONS | | | | | | SHEET NO. |
|---|---|---|---|---|---|---|
| NO. | BY: | DATE: | NO. | BY: | DATE: | S-18 |
| 1 | | | 3 | | | TOTAL SHEETS |
| 2 | | | 4 | | | 33 |

DRAWN BY : D.J.RENCKENS DATE : 12/14
CHECKED BY : W.M.CLARKE DATE : 12/14

10-APR-2015 09:03
S:\PRS\POC\Squad C\Preservation_Projects\BP-5500\H\500002_SD_TOTAL.dgn
malee7