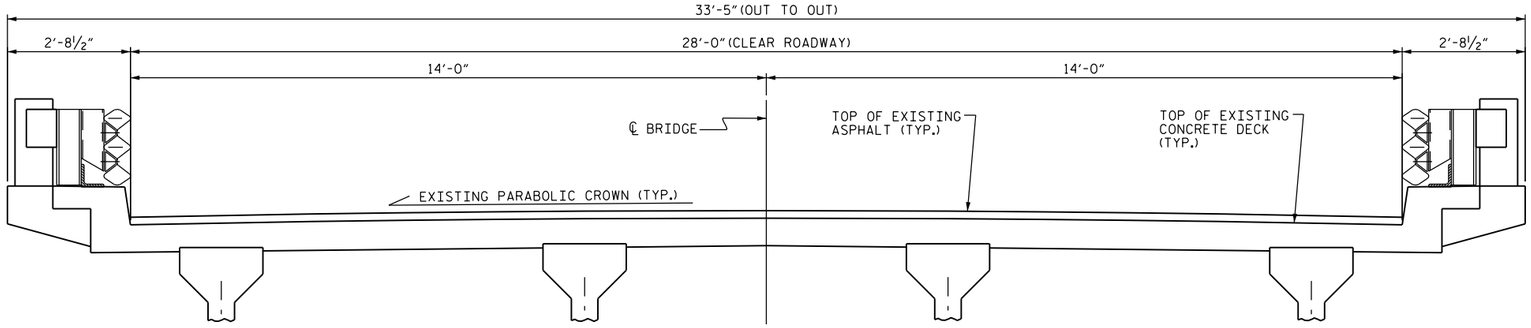


## TYPICAL SECTION

(EXISTING) (LOOKING EAST)

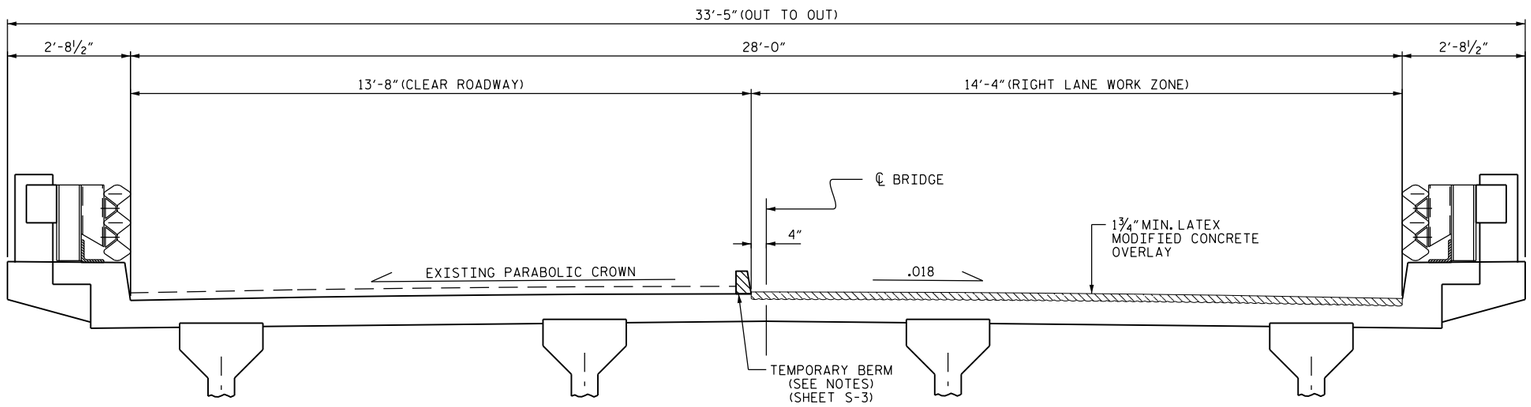


## TYPICAL SECTION

(RIGHT LANE WORK ZONE) (LOOKING EAST)

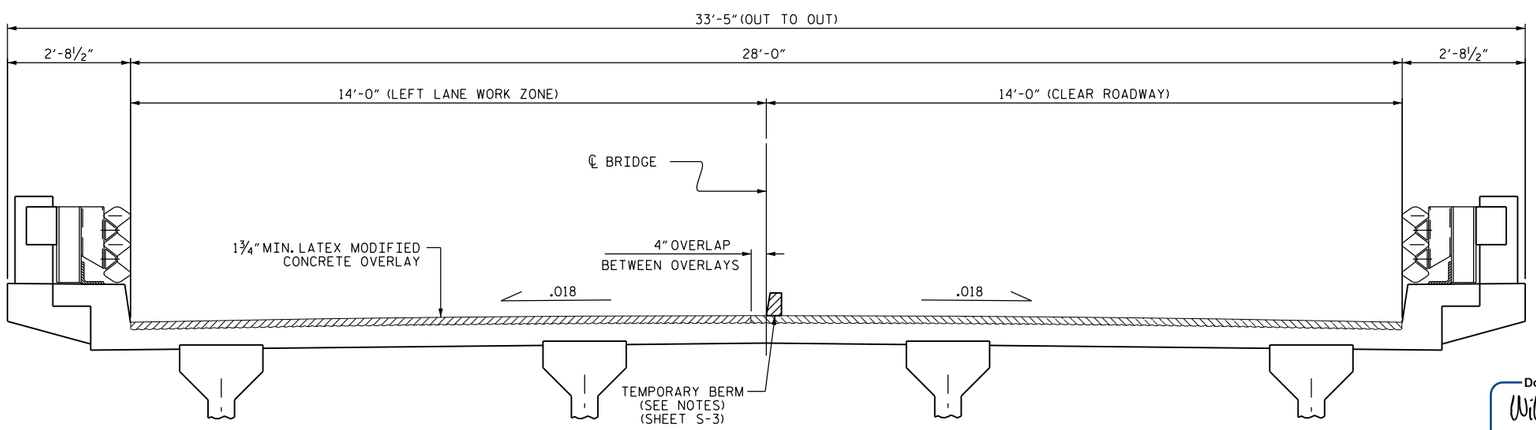


## TYPICAL SECTION

(LEFT LANE WORK ZONE) (LOOKING EAST)

## NOTE:

THE WORK STAGING ON THIS PLAN SHEET INDICATES THAT THE RIGHT LANE LMC WORK IS PERFORMED FIRST, FOLLOWED BY THE LEFT LANE LMC WORK. THE CONTRACTOR MAY ELECT TO SEQUENCE THE WORK DIFFERENTLY, BUT THE DIMENSIONS OF THE WORK ZONE AND CLEAR ROADWAY AREAS SHALL MATCH THOSE INDICATED ON THIS PLAN SHEET, RESPECTIVE TO THE LANE WHERE THE LMC WORK IS BEING PERFORMED.

WHEN PREPARING THE SURFACE FOR LMC OVERLAY ADJACENT TO THE PREVIOUSLY PLACED LMC STAGE, THE PREVIOUSLY PLACED LMC SHALL BE SAW-CUT TO THE FULL DEPTH OF THE LMC AT THE CENTERLINE OF THE BRIDGE AND ALL LMC IN THE 4" OVERLAP SHALL BE REMOVED WITH HAND TOOLS PRIOR TO PLACEMENT OF LMC IN THE SECOND STAGE.

FOLLOWING ASPHALT REMOVAL, THE CONTRACTOR SHALL DETERMINE THE CONCRETE COVER TO THE TOP MAT OF STEEL AND SUBMIT TO THE ENGINEER FOR VERIFICATION OF FINAL GRADE.

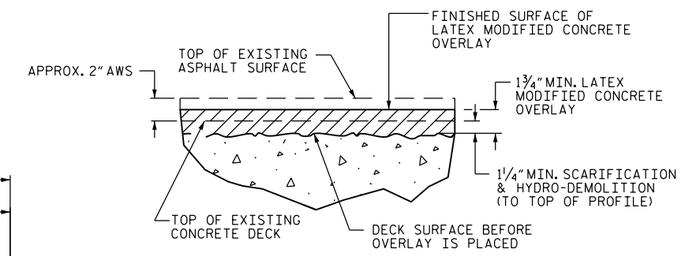


## DETAIL FOR LATEX MODIFIED CONCRETE OVERLAY

(FINISHED SURFACE OF THE LATEX MODIFIED CONCRETE OVERLAY, IS APPROX. 1½" BELOW THE SURFACE OF THE EXISTING ASPHALT WEARING SURFACE)

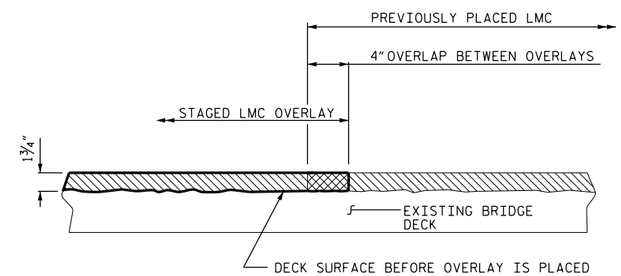


SECTION THRU DECK

## STAGED LMC OVERLAY JOINT

(AS NEEDED)

**PROJECT NO.** BP-5500H

JOHNSTON **COUNTY**

**BRIDGE NO.** 2

STATE OF NORTH CAROLINA
**DEPARTMENT OF TRANSPORTATION**
RALEIGH

# TYPICAL SECTION & OVERLAY DETAILS

DocuSigned by: William M. Clarke
1EB20097EAAF437...

4/10/10

NORTH CAROLINA PROFESSIONAL SEAL 40257 ENGINEER W. MATTHEW CLARKE

| REVISIONS | | | | | | | | SHEET NO. |
|---|---|---|---|---|---|---|---|---|
| NO. | BY: | DATE: | NO. | BY: | DATE: | | | S-4 |
| 1 | | | 3 | | | | | TOTAL SHEETS |
| 2 | | | 4 | | | | | 33 |

DRAWN BY : P. BRYANT / S. T. SANDOR DATE : 7/14
CHECKED BY : W. M. CLARKE DATE : 8/14

10-APR-2015 12:26
S:\PRS\POC\Squad C\Preservation_Projects\BP-5500\H\500002_SD_TOTAL.dgn
malee7