## NOTES:

FOR FOAM JOINT SEALS SEE SPECIAL PROVISIONS.

THE INSTALLED FOAM JOINT SEAL SHALL BE WATER TIGHT.

NOMINAL UNCOMPRESSED SEAL WIDTH OF FOAM JOINT SEAL SHALL BE 2".

THE CONTRACTOR WILL NOT BE PERMITTED TO FORM THE JOINTS IN LIEU OF SAWING THE JOINT.

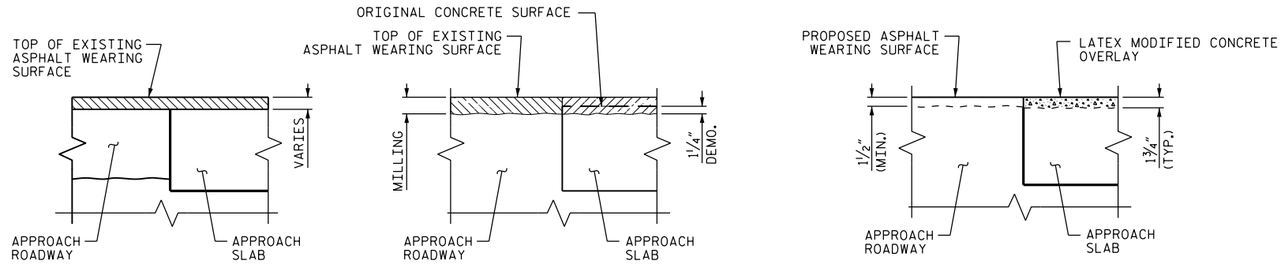


SECTION A-A

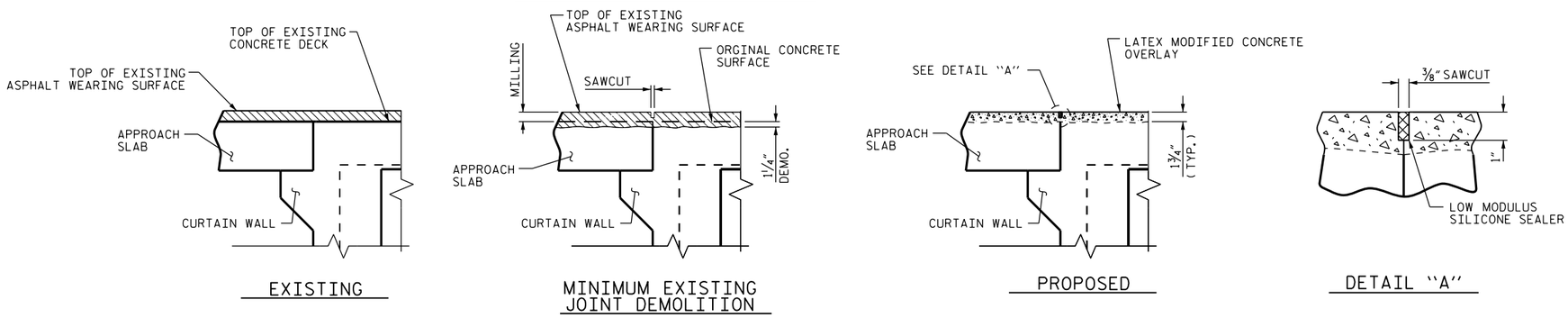


SECTION B-B

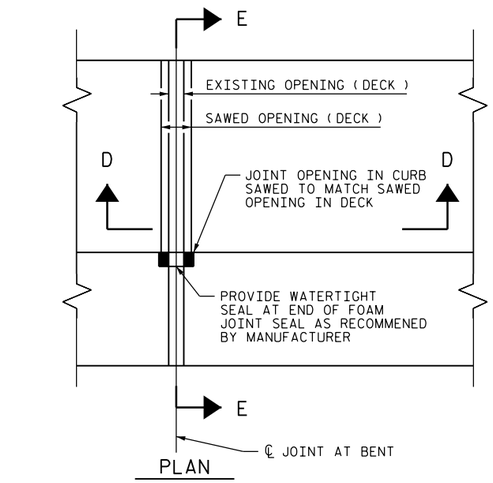


PLAN

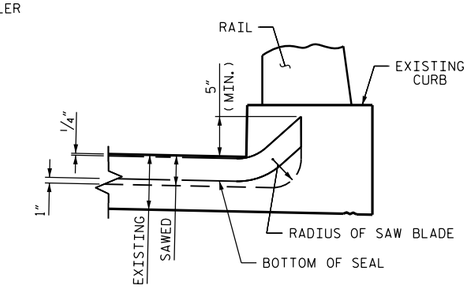


SECTION E-E

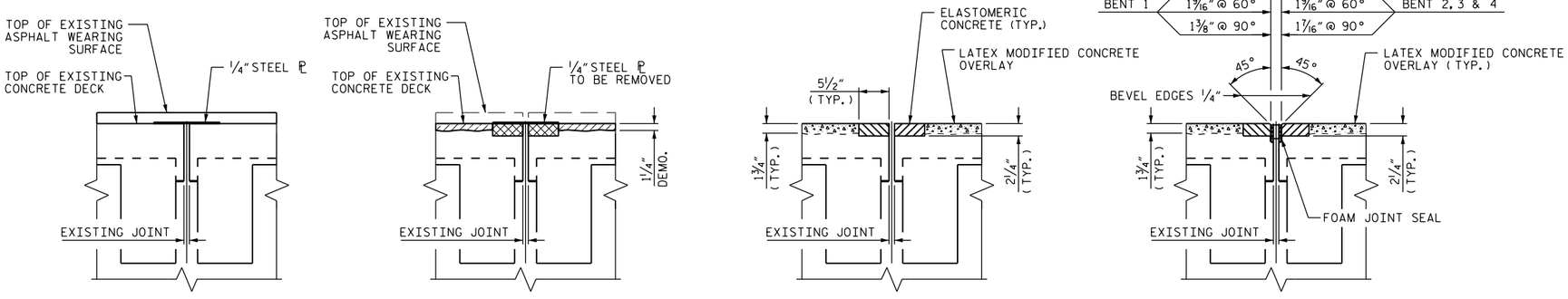


EXISTING JOINT | MINIMUM EXISTING JOINT DEMOLITION | PROPOSED JOINT PRE-SAWED DIMENSIONS | PROPOSED FOAM JOINT SEAL

SECTION D-D

## JOINT SEAL DETAILS AT BENT

PROJECT NO. BP-5500H

JOHNSTON COUNTY

BRIDGE NO. 2

DocuSigned by:
William M. Clarke
1EB20097EAAF437...

4/10/15

IF THE EMBEDDED PORTION OF THE EXISITNG PLASTIC WATERSTOP IS EXPOSED DURING REMOVAL OF UNSOUND CONCRETE OR IF UNSOUND CONCRETE IS REMOVED TO WITHIN 2" OF THE WATERSTOP, THE ENTIRE WATERSTOP SHALL BE REMOVED.

HYDRO-DEMOLITION OR EXCAVATION OF CONCRETE AT THE EXISTING JOINT SHALL RESULT IN THE BOTTOM OF THE EXCAVATION BEING REASONABLY FLAT AND LEVEL, TO PROVIDE SUFFICIENT SUBSTRATE FOR PLACEMENT AND SUPPORT OF ELASTOMERIC OR REPAIR CONCRETE. DEMOLISH BRIDGE JOINT TO THE NECESSARY DEPTH, SUCH THAT ELASTOMERIC CONCRETE SHALL BE FOUNDED ON CONCRETE OR REPAIR CONCRETE SUBSTRATE, NOT LATEX MODIFIED CONCRETE

NORTH CAROLINA PROFESSIONAL SEAL 40257 ENGINEER W. MATTHEW CLARKE

STATE OF NORTH CAROLINA
DEPARTMENT OF TRANSPORTATION
RALEIGH

JOINT DETAILS

| REVISIONS | | | | | | | | SHEET NO. |
|---|---|---|---|---|---|---|---|---|
| NO. | BY: | DATE: | NO. | BY: | DATE: | | | S-11 |
| 1 | | | 3 | | | | | TOTAL SHEETS |
| 2 | | | 4 | | | | | 33 |

| | | | |
|---|---|---|---|
| DRAWN BY : | P.BRYANT | DATE : | 7/2014 |
| CHECKED BY : | W.M.CLARKE | DATE : | 7/2014 |

10-APR-2015 08:31
S:\PRS\POC\Squad C\Preservation_Projects\BP-5500\H\500002_SD_TOTAL.dgn
malee7