WBS # 17BP.4.R.11

CONTRACT #

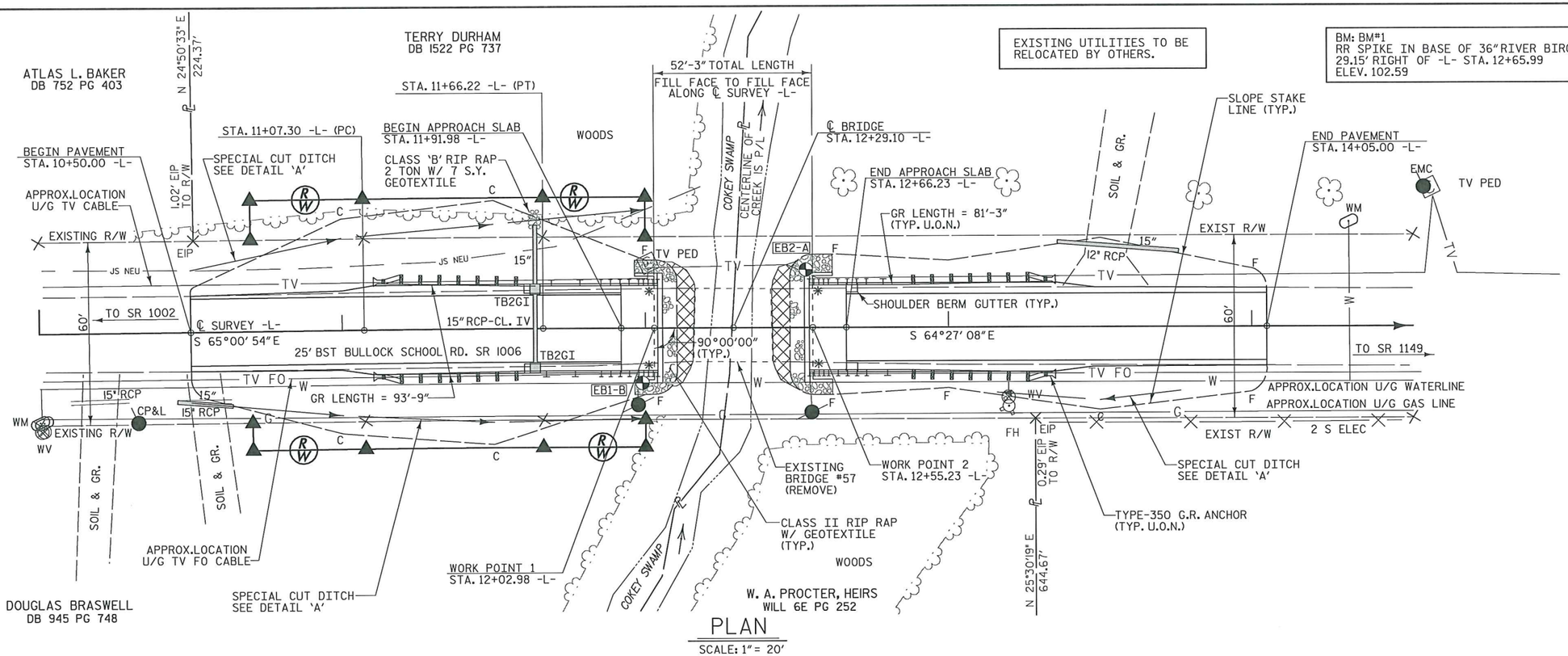


EXISTING UTILITIES TO BE RELOCATED BY OTHERS.

BM: BM#1
RR SPIKE IN BASE OF 36" RIVER BIRCH
29.15' RIGHT OF -L- STA. 12+65.99
ELEV. 102.59

EXISTING BRIDGE No. 57
24'-0" CLEAR ROADWAY
SPANS: 1 @ 20'-1"
REINF. CONC. FLOOR ON I-BEAMS &
CONC. ENCASED I-BEAMS
END BENTS:
REINF. CONC. VERT. ABUTMENTS

RIP RAP CLASS II ( 2'-0" THICK )

| | |
|---|---|
| END BENT No. 1 | 29 TONS |
| END BENT No. 2 | 34 TONS |
| TOTAL | 63 TONS |

GEOTEXTILE FOR DRAINAGE

| | |
|---|---|
| END BENT No. 1 | 32 SQ. YARDS |
| END BENT No. 2 | 38 SQ. YARDS |
| TOTAL | 70 SQ. YARDS |

## PLAN

SCALE: 1" = 20'

⊕ DENOTES GEO-TECH BORE HOLE LOCATIONS.

✳ DENOTES TYPE III GUARDRAIL CONNECTION REQ'D. SEE "GUARDRAIL ANCHORAGE FOR VERTICAL CONCRETE BARRIER RAIL" SHEET.

NOTE: GUARDRAIL LENGTHS AS SHOWN INCLUDE ANCHOR UNITS.

U.O.N. - UNLESS OTHERWISE NOTED

FOR PAVEMENT LAYOUT, R/W LAYOUT & DITCH DETAIL SEE "ROADWAY DETAILS" SHEET.

PI = 11+46.00
EL = 102.30'
VC = 80'
K = 99
D.S. = 50 mph
(-)0.2344% (+)0.5770%

PI = 13+53.00
EL = 103.49'
VC = 60'
K = 153
D.S. = 60 mph
(+)0.5770% (+)0.9694%

GRADE DATA
-L- (SR 1006)

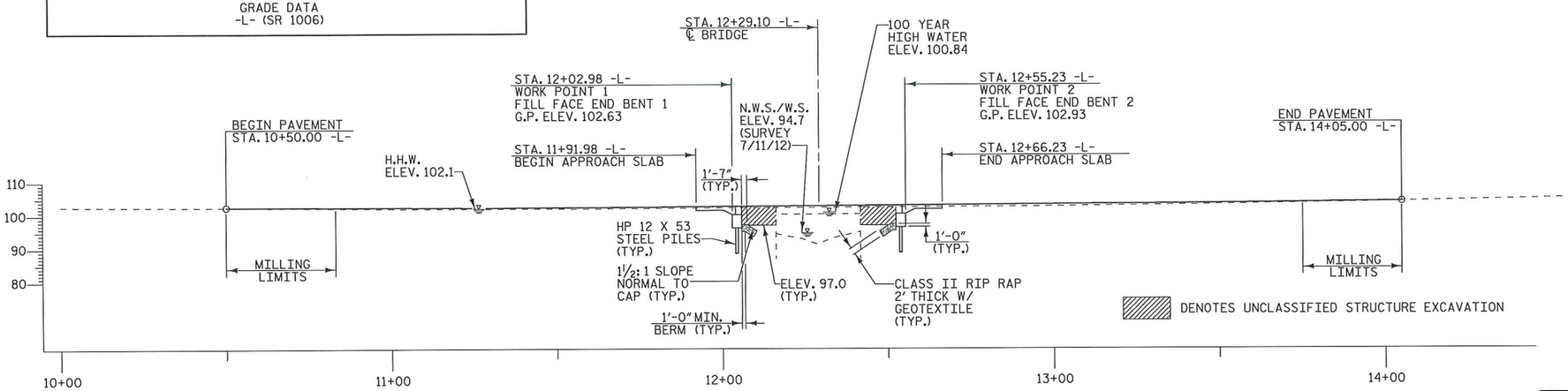


## PROFILE ALONG ℄ SURVEY

SCALE: 1" = 20'

I HEREBY CERTIFY THESE PLANS ARE THE AS-BUILT PLANS

PROJECT NO. 17BP.4.R.11

EDGECOMBE COUNTY

STATION: 12+29.10 -L-

REPLACES BRIDGE NO. 57

STATE OF NORTH CAROLINA
DEPARTMENT OF TRANSPORTATION
RALEIGH

# BRIDGE ON SR 1006 OVER COKEY SWAMP BETWEEN SR 1002 & SR 1149

27'-10" CLEAR ROADWAY - 90° SKEW

NORTH CAROLINA PROFESSIONAL SEAL 19661 ENGINEER L. KEVIN AUSTIN 3/11/13

PLANS PREPARED BY:
MULKEY ENGINEERS & CONSULTANTS
PO Box 33127
Raleigh, N.C. 27636
(919) 851-1912
(919) 851-1918 (FAX)
WWW.MULKEYINC.COM
NC LICENSE NO. C-1081

| REVISIONS | | | | | | | SHEET NO. |
|---|---|---|---|---|---|---|---|
| NO. | BY: | DATE: | NO. | BY: | DATE: | | 1 |
| 1 | | | 3 | | | | TOTAL SHEETS |
| 2 | | | 4 | | | | 24 |

DRAWN BY : W. B. ALLEN DATE : 9/12
CHECKED BY : W. A. DAVIS DATE : 10/12

3/10/2013 11:53:38 AM R:\Structures\Edgecombe 57_SD_GD_01.dgn

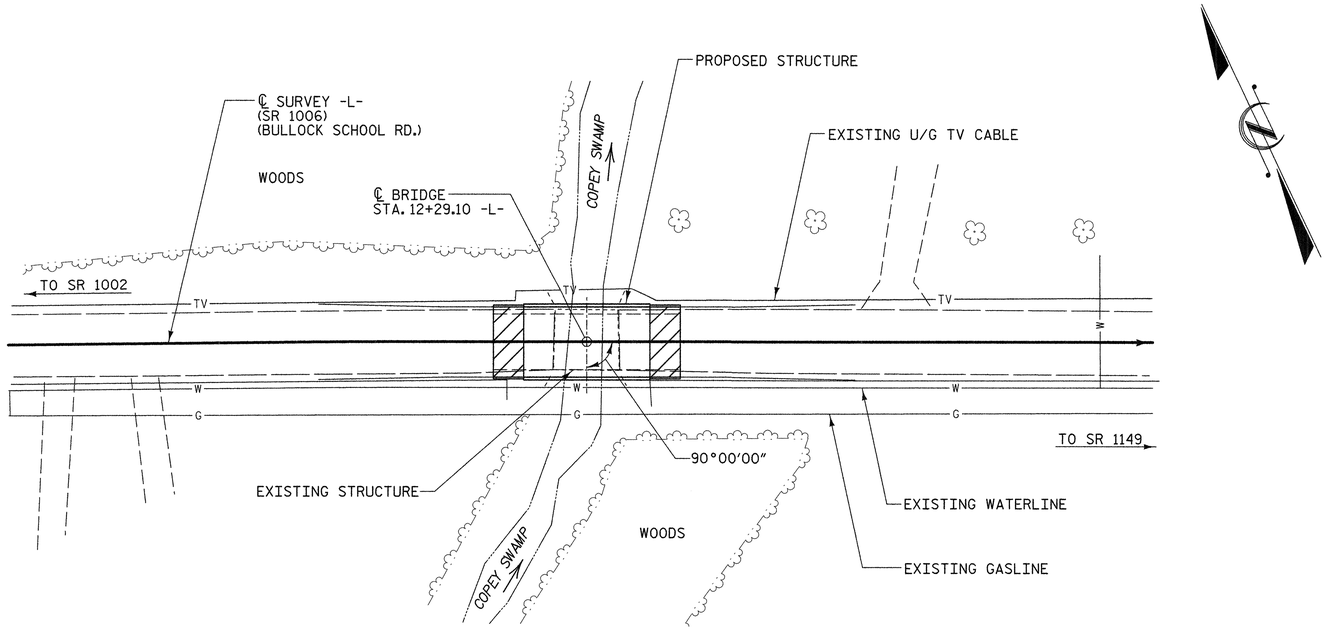


# LOCATION SKETCH

## TOTAL BILL OF MATERIAL

| | REMOVAL OF EXISTING STRUCTURE | UNCLASSIFIED STRUCTURE EXCAVATION | CLASS A CONCRETE | BRIDGE APPROACH SLABS | REINFORCING STEEL | HP 12 X 53 STEEL PILES | | PILE REDRIVES | VERTICAL CONCRETE BARRIER RAIL | RIP RAP CLASS II (2'-0" THICK) | GEOTEXTILE FOR DRAINAGE | ELASTOMERIC BEARINGS | 3'-0" X 1'-9" PRESTRESSED CONCRETE CORED SLABS | |
|---|---|---|---|---|---|---|---|---|---|---|---|---|---|---|
| | LUMP SUM | LUMP SUM | CU. YARDS | LUMP SUM | LBS. | NO. | LIN. FT. | EACH | LIN. FT. | TONS | SQ. YARDS | LUMP SUM | NO. | LIN. FT. |
| SUPERSTRUCTURE | LUMP SUM | | | LUMP SUM | | | | | 100.25 | | | LUMP SUM | 10 | 500.00 |
| END BENT 1 | | LUMP SUM | 20.0 | | 2449 | 5 | 175 | 3 | | 29 | 32 | | | |
| END BENT 2 | | LUMP SUM | 20.0 | | 2449 | 5 | 175 | 3 | | 34 | 38 | | | |
| | | | | | | | | | | | | | | |
| TOTAL | LUMP SUM | LUMP SUM | 40.0 | LUMP SUM | 4898 | 10 | 350 | 6 | 100.25 | 63 | 70 | LUMP SUM | 10 | 500.00 |

## NOTES

ASSUMED LIVE LOAD = HL-93 OR ALTERNATE LOADING.

THIS BRIDGE HAS BEEN DESIGNED IN ACCORDANCE WITH THE AASHTO LRFD BRIDGE DESIGN SPECIFICATIONS.

THIS BRIDGE IS LOCATED IN SEISMIC ZONE 1.

FOR OTHER DESIGN DATA AND GENERAL NOTES, SEE SHEET SN

FOR EROSION CONTROL MEASURES SEE EROSION CONTROL PLANS.

REMOVAL OF THE EXISTING BRIDGE SHALL BE PERFORMED SO AS NOT TO ALLOW DEBRIS TO FALL INTO THE WATER. THE CONTRACTOR SHALL REMOVE THE BRIDGE AND SUBMIT PLANS FOR THE DEMOLITION IN ACCORDANCE WITH ARTICLE 402-2 OF THE STANDARD SPECIFICATIONS.

THE MATERIAL SHOWN ON THIS SHEET IN THE CROSS-HATCHED AREA SHALL BE EXCAVATED FOR A DISTANCE OF 25 FT. EACH SIDE OF CENTERLINE ROADWAY AS DIRECTED BY THE ENGINEER. THIS WORK WILL BE PAID FOR AT THE CONTRACT LUMP SUM PRICE FOR UNCLASSIFIED STRUCTURE EXCAVATION.

THE SUBSTRUCTURE OF THE EXISTING BRIDGE INDICATED ON THE PLANS IS FROM THE BEST INFORMATION AVAILABLE. SINCE THIS INFORMATION IS SHOWN FOR THE CONVENIENCE OF THE CONTRACTOR, THE CONTRACTOR SHALL HAVE NO CLAIM WHATSOEVER AGAINST THE DEPARTMENT OF TRANSPORTATION FOR ANY DELAYS OR ADDITIONAL COST INCURRED BASED ON DIFFERENCES BETWEEN THE EXISTING BRIDGE SUBSTRUCTURE SHOWN ON THE PLANS AND THE ACTUAL CONDITIONS AT THE PROJECT SITE.

INASMUCH AS THE PAINT SYSTEM ON THE EXISTING STRUCTURAL STEEL CONTAINS LEAD, THE CONTRACTOR'S ATTENTION IS DIRECTED TO ARTICLE 107-1, OF THE STANDARD SPECIFICATIONS. ANY COSTS RESULTING FROM COMPLIANCE WITH APPLICABLE STATE OR FEDERAL REGULATIONS PERTAINING TO HANDLING OF MATERIALS CONTAINING LEAD BASED PAINT SHALL BE INCLUDED IN THE BID PRICE FOR "REMOVAL OF EXISTING STRUCTURE."

THIS STRUCTURE HAS BEEN DESIGNED IN ACCORDANCE WITH HEC 18, "EVALUATING SCOUR AT BRIDGES", MAY 2001.

FOR PILES SEE SECTION 450 OF THE STANDARD SPECIFICATIONS.

PILES AT END BENT NO. 1 AND 2 ARE DESIGNED FOR A FACTORED RESISTANCE OF 85 TONS PER PILE.

DRIVE PILES AT END BENT NO. 1 AND 2 TO A REQUIRED DRIVING RESISTANCE OF 145 TONS PER PILE.

IT IS ESTIMATED THAT A HAMMER WITH AN EQUIVALENT RATED ENERGY IN THE RANGE OF 30 TO 50 FT-KIPS PER BLOW WILL BE ROUIRED TO DRIVE PILES AT END BENT NO. 1 AND 2. THIS ESTIMATED ENERGY RANGE DOES NOT RELEASE THE CONTRACTOR FROM PROVIDING DRIVING EQUIPMENT IN ACCORDANCE WITH SUBARTICLE 450-3(D)(2) OF THE STANDARD SPECIFICATIONS.

ADT = 2700 FOR YEAR 2009.

ROADWAY APPROACH EMBANKMENT SHALL BE WIDENED AS NECESSARY FOR GUARDRAIL INSTALLATION.

FOR SUBMITTAL OF WORKING DRAWINGS, SEE SPECIAL PROVISIONS.

FOR FALSEWORK AND FORMWORK, SEE SPECIAL PROVISIONS.

FOR CRANE SAFETY, SEE SPECIAL PROVISIONS.

FOR GROUT FOR STRUCTURES, SEE SPECIAL PROVISIONS.

NO DECK DRAINS REQUIRED.

ASPHALT WEARING SURFACE IS INCLUDED IN ROADWAY QUANTITY ON ROADWAY PLANS.

### HYDROGRAPHIC DATA:

| | |
|---|---|
| DESIGN DISCHARGE - | 675 CFS |
| FREQUENCY OF DESIGN FLOOD - | 25 YEAR |
| DESIGN HIGH WATER ELEVATION - | 99.1 |
| DRAINAGE AREA - | 3.6 SQ. MI. |
| BASE DISCHARGE (Q 100) - | 1080 CFS |
| BASE HIGH WATER ELEVATION - | 100.84 |

### OVERTOPPING FLOOD DATA:

| | |
|---|---|
| OVERTOPPING DISCHARGE - | >1715 CFS |
| FREQUENCY OF OVERTOPPING FLOOD - | 500(+) YEAR |
| OVERTOPPING FLOOD ELEVATION - | 102.4 |

PROJECT NO. 17BP.4.R.11

EDGECOMBE COUNTY

STATION: 12+29.10 -L-

REPLACES BRIDGE NO. 57

NORTH CAROLINA PROFESSIONAL SEAL 19661 ENGINEER KEVIN AUSTIN 12/18/12

PLANS PREPARED BY:

MULKEY ENGINEERS & CONSULTANTS
PO Box 33127
RALEIGH, N.C. 27636
(919) 851-1912
(919) 851-1918 (FAX)
WWW.MULKEYINC.COM
NC LICENSE NO. C-1021

STATE OF NORTH CAROLINA
DEPARTMENT OF TRANSPORTATION
RALEIGH

# LOCATION SKETCH & TOTAL BILL OF MATERIAL

27'-10" CLEAR ROADWAY - 90° SKEW

| REVISIONS | | | | | | SHEET NO. |
|---|---|---|---|---|---|---|
| NO. | BY: | DATE: | NO. | BY: | DATE: | 2 |
| 1 | | | 3 | | | TOTAL SHEETS |
| 2 | | | 4 | | | 24 |

DRAWN BY : W. B. ALLEN DATE : 9/12
CHECKED BY : W. A. DAVIS DATE : 10/12

12/19/2012 10:55:05 AM R:\Structures\Edgecombe 57_SD_GD_02.dgn

# LOAD AND RESISTANCE FACTOR RATING (LRFD) SUMMARY FOR PRESTRESSED CONCRETE GIRDERS

| LEVEL | | VEHICLE | WEIGHT (W) (TONS) | CONTROLLING LOAD RATING | MINIMUM RATING FACTORS (RF) | TONS = W X RF | STRENGTH I LIMIT STATE | | | | | | | | | | | SERVICE III LIMIT STATE | | | | | | COMMENT NUMBER |
|---|---|---|---|---|---|---|---|---|---|---|---|---|---|---|---|---|---|---|---|---|---|---|---|---|
| | | | | | | | | MOMENT | | | | | SHEAR | | | | | | MOMENT | | | | | |
| | | | | | | | LIVELOAD FACTORS | DISTRIBUTION FACTORS (DF) | RATING FACTOR | SPAN | GIRDER LOCATION | DISTANCE FROM LEFT END OF SPAN (ft) | DISTRIBUTION FACTORS (DF) | RATING FACTOR | SPAN | GIRDER LOCATION | DISTANCE FROM LEFT END OF SPAN (ft) | LIVELOAD FACTORS | DISTRIBUTION FACTORS (DF) | RATING FACTOR | SPAN | GIRDER LOCATION | DISTANCE FROM LEFT END OF SPAN (ft) | |
| DESIGN LOAD RATING | | HL-93(Inv) | N/A | 1 | 1.394 | -- | 1.75 | 0.276 | 1.57 | 50′ | EL | 24.5 | 0.531 | 1.39 | 50′ | EL | 2.45 | 0.80 | 0.276 | 1.44 | 50′ | EL | 24.5 | |
| | | HL-93(Opr) | N/A | -- | 1.807 | -- | 1.35 | 0.276 | 2.03 | 50′ | EL | 24.5 | 0.531 | 1.81 | 50′ | EL | 2.45 | N/A | -- | -- | -- | -- | -- | |
| | | HS-20(Inv) | 36.000 | 2 | 1.667 | 60.007 | 1.75 | 0.276 | 1.95 | 50′ | EL | 24.5 | 0.531 | 1.67 | 50′ | EL | 2.45 | 0.80 | 0.276 | 1.79 | 50′ | EL | 24.5 | |
| | | HS-20(Opr) | 36.000 | -- | 2.161 | 77.787 | 1.35 | 0.276 | 2.52 | 50′ | EL | 24.5 | 0.531 | 2.16 | 50′ | EL | 2.45 | N/A | -- | -- | -- | -- | -- | |
| LEGAL LOAD RATING | SV | SNSH | 13.500 | -- | 3.635 | 49.079 | 1.4 | 0.276 | 4.95 | 50′ | EL | 24.5 | 0.531 | 4.7 | 50′ | EL | 2.45 | 0.80 | 0.276 | 3.64 | 50′ | EL | 24.5 | |
| | | SNGARBS2 | 20.000 | -- | 2.871 | 57.42 | 1.4 | 0.276 | 3.91 | 50′ | EL | 24.5 | 0.531 | 3.42 | 50′ | EL | 2.45 | 0.80 | 0.276 | 2.87 | 50′ | EL | 24.5 | |
| | | SNAGRIS2 | 22.000 | -- | 2.778 | 61.109 | 1.4 | 0.276 | 3.78 | 50′ | EL | 19.6 | 0.531 | 3.21 | 50′ | EL | 2.45 | 0.80 | 0.276 | 2.78 | 50′ | EL | 24.5 | |
| | | SNCOTTS3 | 27.250 | -- | 1.814 | 49.418 | 1.4 | 0.276 | 2.47 | 50′ | EL | 24.5 | 0.531 | 2.36 | 50′ | EL | 2.45 | 0.80 | 0.276 | 1.81 | 50′ | EL | 24.5 | |
| | | SNAGGRS4 | 34.925 | -- | 1.577 | 55.063 | 1.4 | 0.276 | 2.15 | 50′ | EL | 24.5 | 0.531 | 2.01 | 50′ | EL | 2.45 | 0.80 | 0.276 | 1.58 | 50′ | EL | 24.5 | |
| | | SNS5A | 35.550 | -- | 1.537 | 54.657 | 1.4 | 0.276 | 2.09 | 50′ | EL | 24.5 | 0.531 | 2.07 | 50′ | EL | 2.45 | 0.80 | 0.276 | 1.54 | 50′ | EL | 24.5 | |
| | | SNS6A | 39.950 | -- | 1.438 | 57.43 | 1.4 | 0.276 | 1.96 | 50′ | EL | 24.5 | 0.531 | 1.91 | 50′ | EL | 2.45 | 0.80 | 0.276 | 1.44 | 50′ | EL | 24.5 | |
| | | SNS7B | 42.000 | -- | 1.370 | 57.54 | 1.4 | 0.276 | 1.87 | 50′ | EL | 24.5 | 0.531 | 1.91 | 50′ | EL | 2.45 | 0.80 | 0.276 | 1.37 | 50′ | EL | 24.5 | |
| | TTST | TNAGRIT3 | 33.000 | -- | 1.761 | 58.118 | 1.4 | 0.276 | 2.4 | 50′ | EL | 24.5 | 0.531 | 2.25 | 50′ | EL | 2.45 | 0.80 | 0.276 | 1.76 | 50′ | EL | 24.5 | |
| | | TNT4A | 33.075 | -- | 1.777 | 58.759 | 1.4 | 0.276 | 2.42 | 50′ | EL | 24.5 | 0.531 | 2.17 | 50′ | EL | 2.45 | 0.80 | 0.276 | 1.78 | 50′ | EL | 24.5 | |
| | | TNT6A | 41.600 | -- | 1.480 | 61.558 | 1.4 | 0.276 | 2.01 | 50′ | EL | 24.5 | 0.531 | 2.08 | 50′ | EL | 2.45 | 0.80 | 0.276 | 1.48 | 50′ | EL | 24.5 | |
| | | TNT7A | 42.000 | -- | 1.502 | 63.087 | 1.4 | 0.276 | 2.05 | 50′ | EL | 24.5 | 0.531 | 1.94 | 50′ | EL | 2.45 | 0.80 | 0.276 | 1.50 | 50′ | EL | 24.5 | |
| | | TNT7B | 42.000 | -- | 1.566 | 65.773 | 1.4 | 0.276 | 2.13 | 50′ | EL | 24.5 | 0.531 | 1.84 | 50′ | EL | 2.45 | 0.80 | 0.276 | 1.57 | 50′ | EL | 24.5 | |
| | | TNAGRIT4 | 43.000 | -- | 1.486 | 63.902 | 1.4 | 0.276 | 2.02 | 50′ | EL | 24.5 | 0.531 | 1.77 | 50′ | EL | 2.45 | 0.80 | 0.276 | 1.49 | 50′ | EL | 24.5 | |
| | | TNAGT5A | 45.000 | -- | 1.388 | 62.47 | 1.4 | 0.276 | 1.89 | 50′ | EL | 24.5 | 0.531 | 1.8 | 50′ | EL | 2.45 | 0.80 | 0.276 | 1.39 | 50′ | EL | 24.5 | |
| | | TNAGT5B | 45.000 | 3 | 1.360 | 61.206 | 1.4 | 0.276 | 1.85 | 50′ | EL | 24.5 | 0.531 | 1.68 | 50′ | EL | 2.45 | 0.80 | 0.276 | 1.36 | 50′ | EL | 24.5 | |

## LOAD FACTORS:

| DESIGN LOAD RATING FACTORS | LIMIT STATE | $\gamma_{DC}$ | $\gamma_{DW}$ |
|---|---|---|---|
| | STRENGTH I | 1.25 | 1.50 |
| | SERVICE III | 1.00 | 1.00 |

## NOTES:

MINIMUM RATING FACTORS ARE BASED ON THE STRENGTH I AND SERVICE III LIMIT STATES.

ALLOWABLE STRESSES FOR SERVICE III LIMIT STATE ARE AS REQUIRED FOR DESIGN.

## COMMENTS:

1.
2.
3.
4.

## CONTROLLING LOAD RATING

(#) CONTROLLING LOAD RATING

(1) DESIGN LOAD RATING (HL-93)

(2) DESIGN LOAD RATING (HS-20)

(3) LEGAL LOAD RATING **

** SEE CHART FOR VEHICLE TYPE

## GIRDER LOCATION

I - INTERIOR GIRDER
EL - EXTERIOR LEFT GIRDER
ER - EXTERIOR RIGHT GIRDER

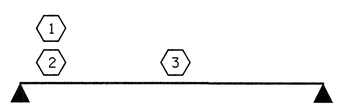


## LRFR SUMMARY

FOR SPAN 'A'

PROJECT NO. 17BP.4.R.11

EDGECOMBE COUNTY

STATION: 12+29.10 -L-

THIS STANDARD DRAWING REVIEWED & ADOPTED FOR USE AT THE REFERENCED LOCATION BY THE UNDERSIGNED:

NORTH CAROLINA PROFESSIONAL SEAL 19661 ENGINEER KEVIN AUSTIN 12/19/12

PLANS PREPARED BY:

MULKEY ENGINEERS & CONSULTANTS
PO BOX 33127
RALEIGH, N.C. 27636
(919) 851-1912
(919) 851-1918 (FAX)
WWW.MULKEYINC.COM
NC LICENSE NO. C-1021

STATE OF NORTH CAROLINA
DEPARTMENT OF TRANSPORTATION
RALEIGH

STANDARD

LRFR SUMMARY FOR 50′ CORED SLAB UNIT 90° SKEW (NON-INTERSTATE TRAFFIC)

| REVISIONS | | | | | | SHEET NO. |
|---|---|---|---|---|---|---|
| NO. | BY: | DATE: | NO. | BY: | DATE: | 3 |
| 1 | | | 3 | | | TOTAL SHEETS |
| 2 | | | 4 | | | 24 |

ASSEMBLED BY : W. B. ALLEN DATE : 10/12
CHECKED BY : W.A. DAVIS DATE : 10/12

DRAWN BY : CVC 6/10
CHECKED BY : DNS 6/10

12/19/2012 10:55:48 AM R:\Structures\Edgecombe 17_SD_LRFR_01.dgn

STD. NO. 21LRFR1_90S_50L

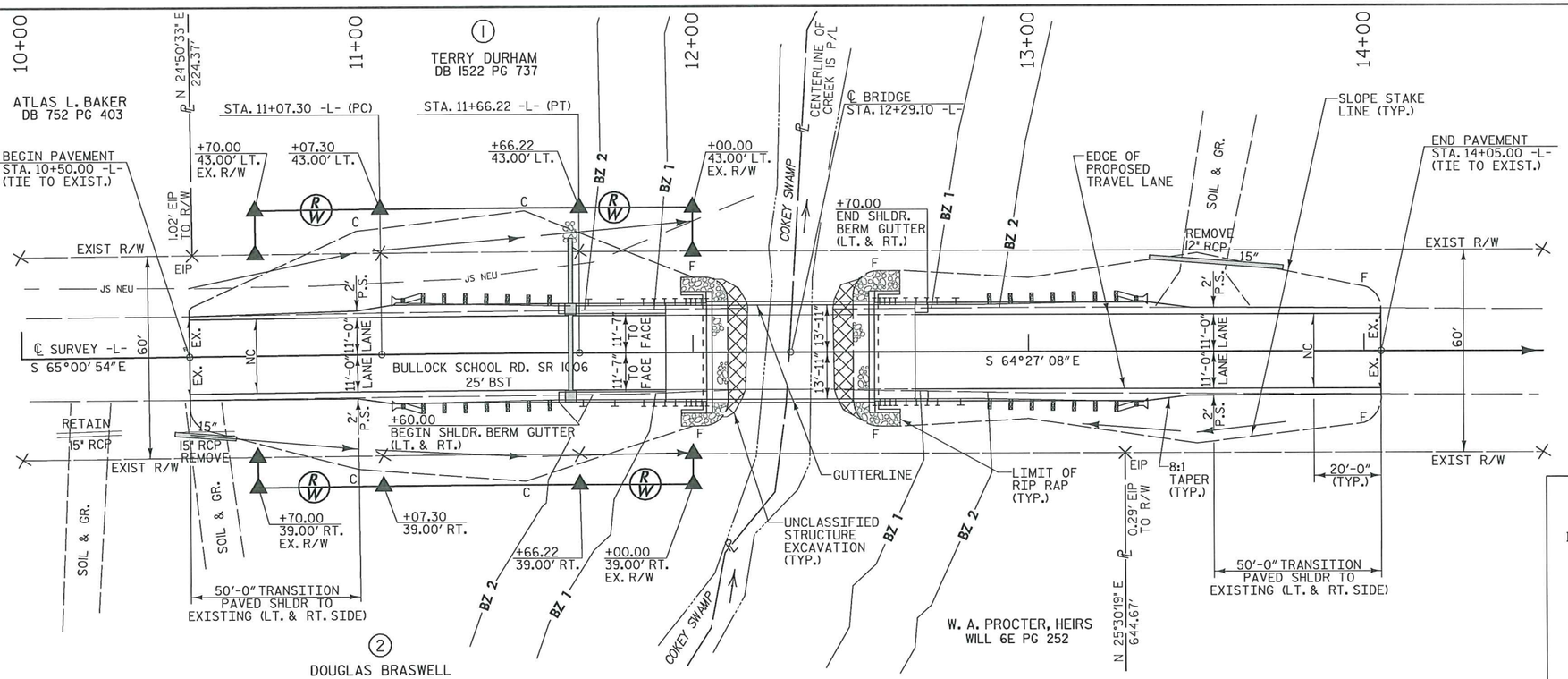


## PAVEMENT LAYOUT DETAIL

SCALE: 1" = 20'

### HORIZONTAL CURVE DATA

PI STA. 11+36.76
Δ = 0° 33' 45.5" (RT)
D = 0° 57' 17.7"
L = 58.92'
T = 29.46'
R = 6,000.00'

### DATUM DESCRIPTION

THE COORDINATE SYSTEM DEVELOPED FOR THIS PROJECT IS BASED ON THE STATE PLANE COORDINATES ESTABLISHED BY NCDOT FOR MONUMENT "GPS-B32-0057-1" WITH NAD 1983/2007 STATE PLANE GRID COORDINATES OF NORTHING: 776277.13(ft) EASTING: 2357128.69(ft) ELEVATION: 103.49(ft)

GROUND DISTANCES IN FIELD WERE USED TO DETERMINE COORDINATES FOR "GPS-B32-0057-2" AND "GPS-B32-0057-3"

LOCALIZED HORIZONTAL GROUND DISTANCE FROM "GPS-B32-0057-1" TO -L- STATION 10+50.00 IS S 71° 03' 19.2" E 151.20'

VERTICAL DATUM USED IS NAVD 88

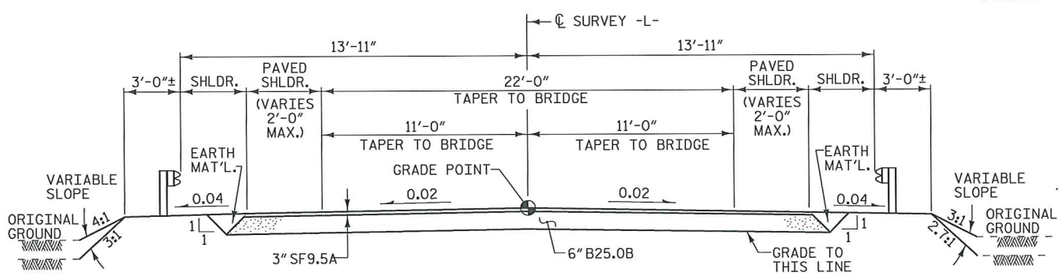


## FULL DEPTH PAVEMENT

FROM -L- STA. 11+75 TO BEGIN BRIDGE
FROM END BRIDGE TO -L- STA. 12+75

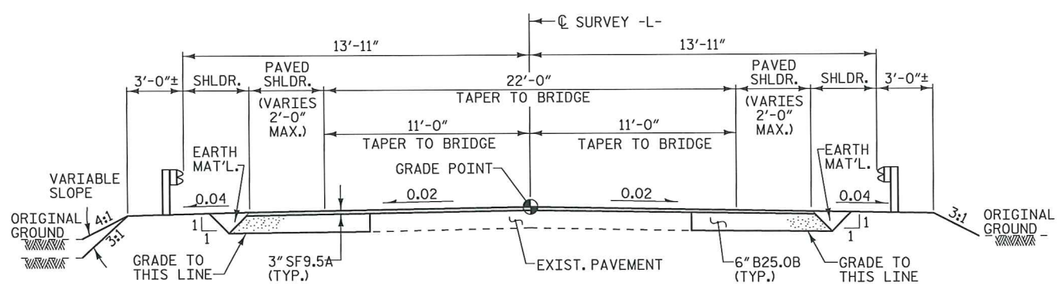


## WIDENING PAVEMENT

FROM -L- STA. 10+50.00 TO -L- STA. 11+75
FROM -L- STA. 12+75 TO -L- STA. 14+05.00

## TYPICAL ROADWAY SECTION

WITHIN CONSTRUCTION LIMITS

## RIGHT OF WAY AREA DATA

| PARCEL NO. | PROPERTY OWNERS NAMES | TOTAL AREA | AREA TAKEN | AREA REMAINING RT. | AREA REMAINING LT. | CONST. EASE. | PERM. DRAIN. EASE. | TEMP. DRAIN. EASE. |
|---|---|---|---|---|---|---|---|---|
| 1 | TERRY DURHAM | 10.15 AC | 1695 SF | | 10.11 AC | | | |
| 2 | DOUGLAS BRASWELL | 1.84 AC | 1167 SF | 1.81 AC | | | | |

## DETAIL A

SPECIAL CUT DITCH
( Not to Scale)

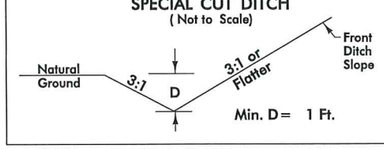


FROM STA. TO STA. 10+50 – 12+00 RT.
FROM STA. TO STA. 10+50 – 12+00 LT.
FROM STA. TO STA. 13+15 – 13+75 LT.

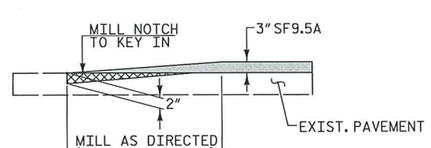


## MILLING DETAIL

MILL EXISTING PAVEMENT AT THE FOLLOWING LOCATIONS
-L- STA. 10+50.00 TO STA. 10+83+/-
-L- STA. 13+75+/- TO STA. 14+05.00

PROJECT NO. 17BP.4.R.11
EDGECOMBE COUNTY
STATION: 12+29.10 -L-

REPLACES BRIDGE NO. 57

STATE OF NORTH CAROLINA
DEPARTMENT OF TRANSPORTATION
RALEIGH

# ROADWAY DETAILS

27'-10" CLEAR ROADWAY - 90° SKEW

NORTH CAROLINA PROFESSIONAL SEAL 1966 ENGINEER L. KEVIN AUSTIN
3/11/13

PLANS PREPARED BY:
MULKEY ENGINEERS & CONSULTANTS
PO Box 33127
RALEIGH, N.C. 27636
(919) 851-1912
(919) 851-1918 (FAX)
WWW.MULKEYINC.COM
NO LICENSE NO. C-1081

| REVISIONS | | | | | | | | SHEET NO. |
|---|---|---|---|---|---|---|---|---|
| NO. | BY: | DATE: | NO. | BY: | DATE: | | | 4 |
| 1 | | | 3 | | | | | TOTAL SHEETS |
| 2 | | | 4 | | | | | 24 |

DRAWN BY : W. B. ALLEN DATE : 9/12
CHECKED BY : W. A. DAVIS DATE : 10/12

3/12/2013 9:49:11 AM R:\Structures\Edgecombe 57_BD_03.dgn

| 0 2.5 5 | PROJ. REFERENCE NO. | SHEET NO. |
|---|---|---|
| | 17BP.4.R.11 | 5 |

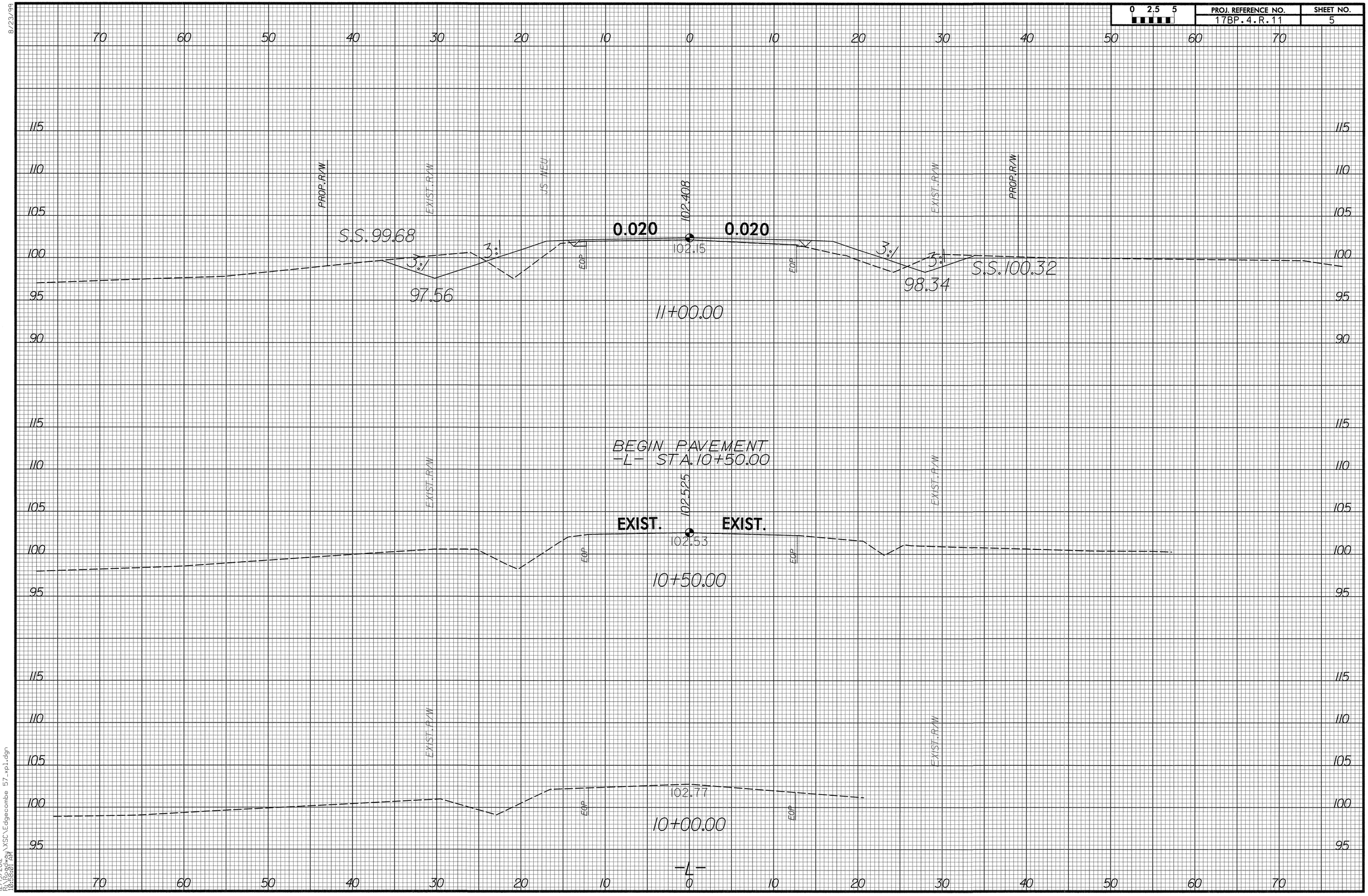


8/23/99

12/19/2012
R:\Roadway\XSC\Edgecombe 57_xpl.dgn
10:58:01 AM

| 0 2,5 5 | PROJ. REFERENCE NO. | SHEET NO. |
|---|---|---|
| | 17BP.4.R.11 | 6 |

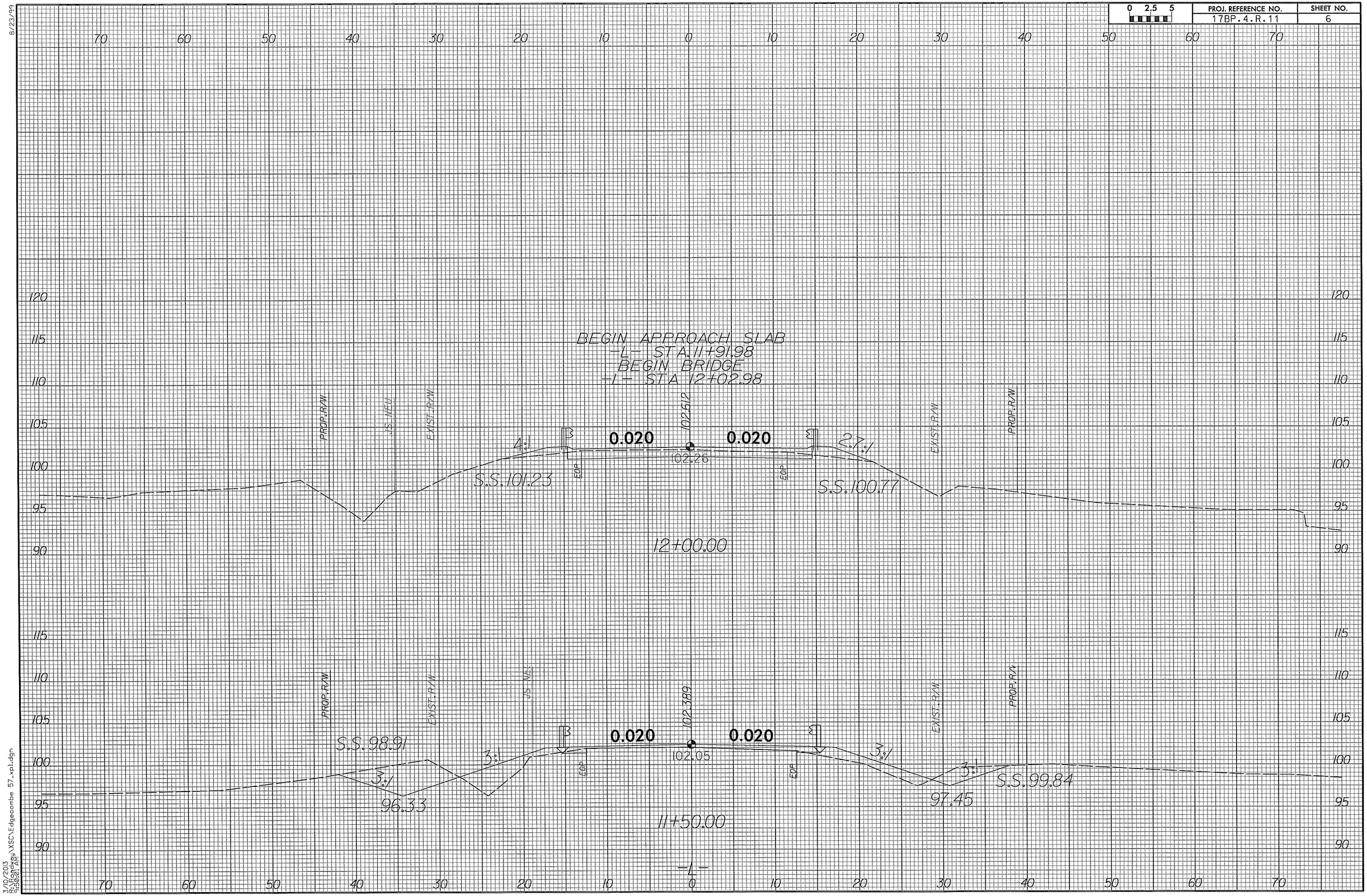


8/23/99

3/10/2013
R:\Roadway\XSC\Edgecombe 57_xpl.dgn
9:36:01 AM

| 0 2.5 5 | PROJ. REFERENCE NO. | SHEET NO. |
|---|---|---|
| | 17BP.4.R.11 | 7 |

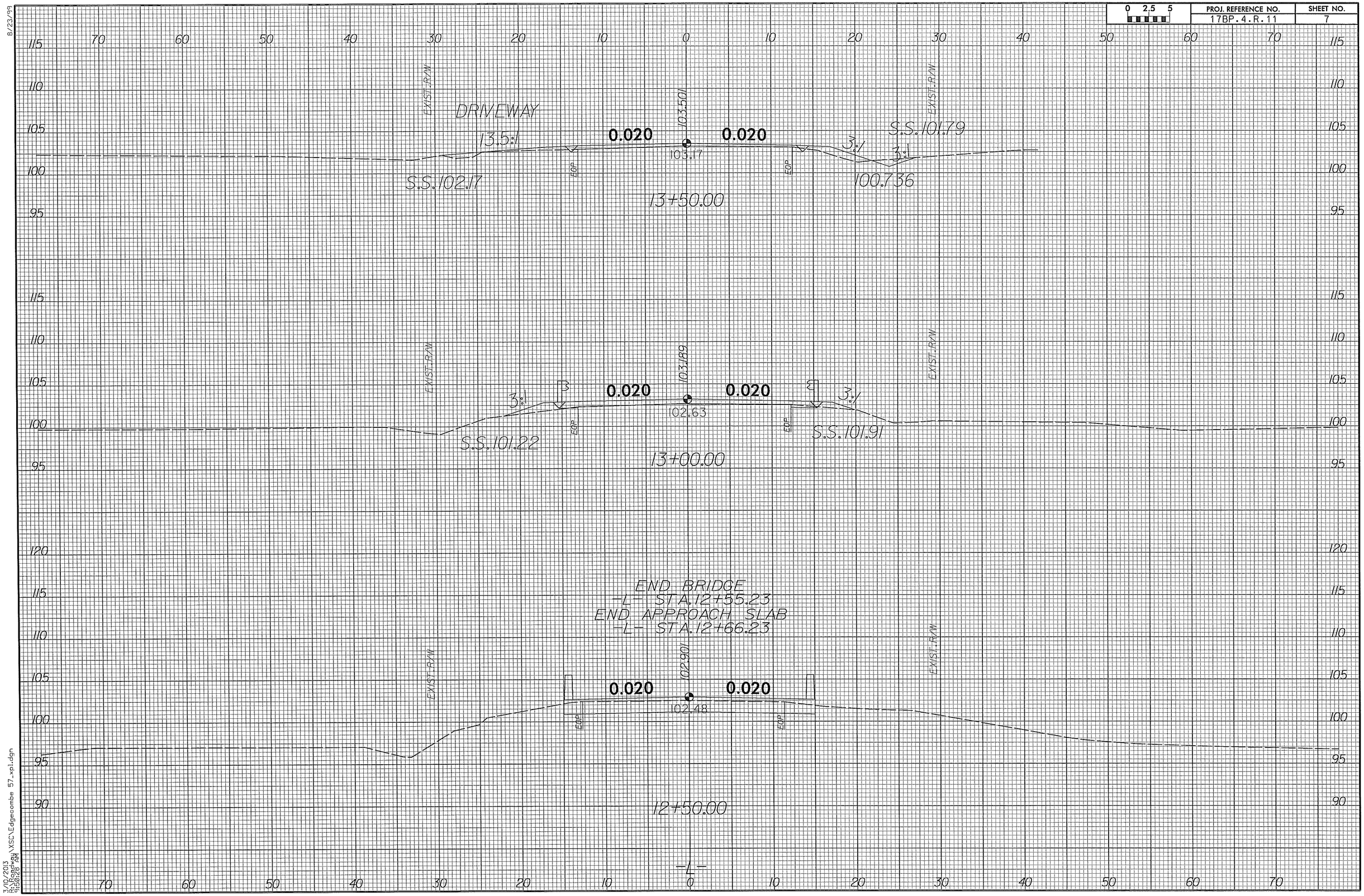


8/23/99

3/10/2013
R:\Roadway\XSC\Edgecombe 57_xpl.dgn
11:30:28 AM

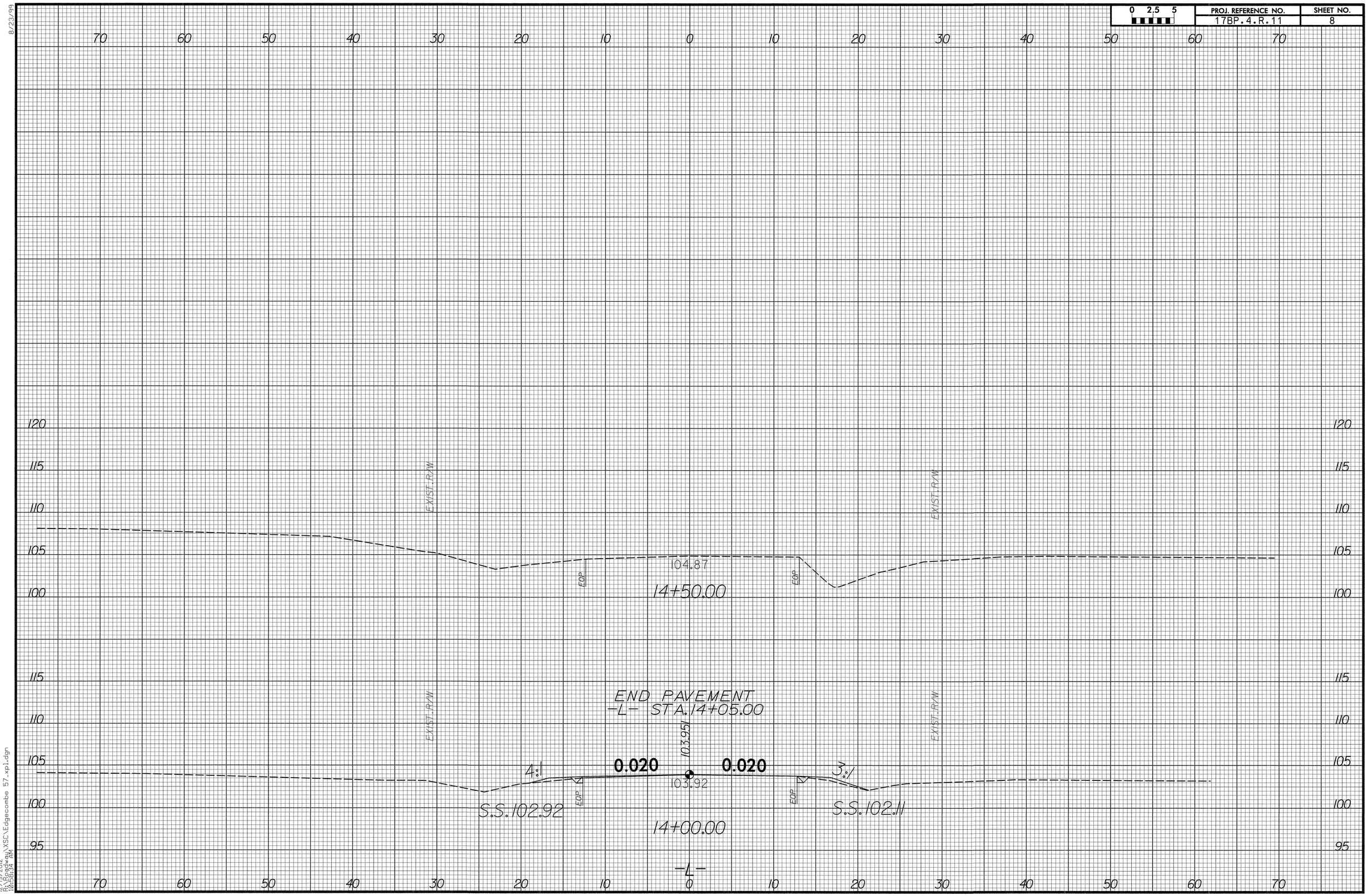


8/23/99
12/19/2012
R:\Roadway\XSC\Edgecombe 57_xp1.dgn
10:58:34 AM

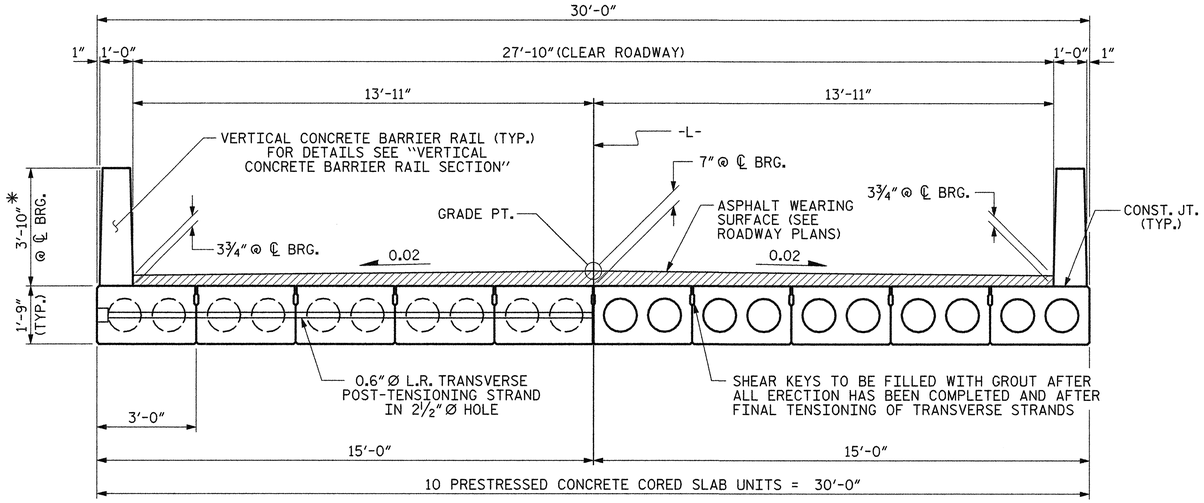


HALF SECTION
AT INTERMEDIATE DIAPHRAGMS

HALF SECTION
THROUGH VOIDS

## TYPICAL SECTION

* - THE MAXIMUM BARRIER RAIL HEIGHT AND ASPHALT THICKNESS IS SHOWN. THE HEIGHT OF THE BARRIER RAIL AND ASPHALT THICKNESS VARIES WHILE THE TOP OF THE BARRIER RAIL FOLLOWS THE PROFILE OF THE GUTTERLINE. FOR RAIL HEIGHT DETAILS AND ASPHALT THICKNESS SEE THE "VERTICAL CONCRETE BARRIER RAIL SECTION" DETAIL.

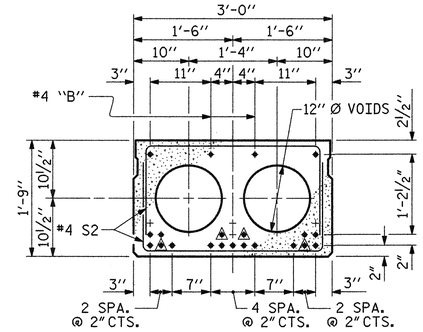


INTERIOR SLAB SECTION
(50' UNIT)
(19 STRANDS REQUIRED)

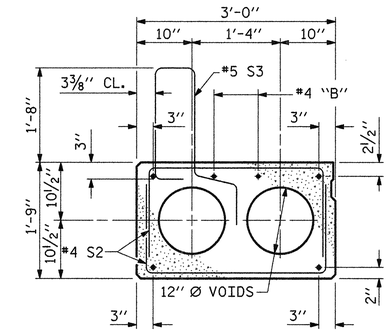


## EXT. SLAB SECTION

(FOR PRESTRESSED STRAND LAYOUT, SEE INTERIOR SLAB SECTION.)

## 0.6" Ø LOW RELAXATION STRAND LAYOUT

◉ BOND SHALL BE BROKEN ON THESE STRANDS FOR A DISTANCE OF 6'-0" FROM END OF CORED SLAB UNIT. SEE STANDARD SPECIFICATIONS, ARTICLE 1078-7.

## DEBONDING LEGEND

FIXED END

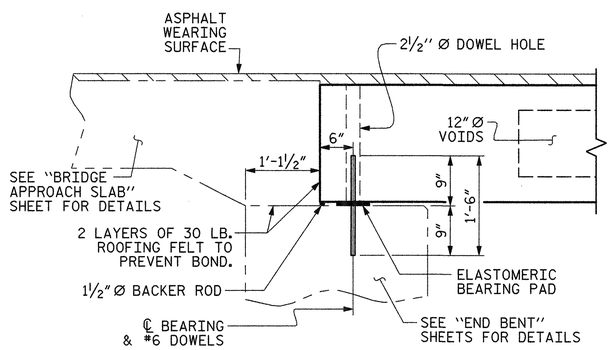


## SECTION AT END BENT

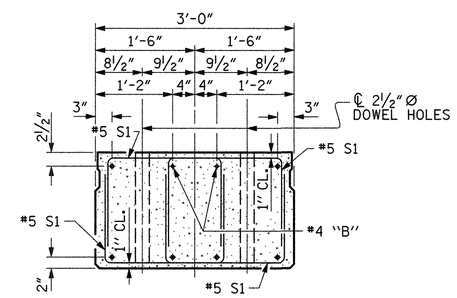


## END ELEVATION

SHOWING PLACEMENT OF DOUBLE STIRRUPS AND LOCATION OF DOWEL HOLES. (STRAND LAYOUT NOT SHOWN.) INTERIOR SLAB UNIT SHOWN-EXTERIOR SLAB UNIT SIMILAR EXCEPT SHEAR KEY LOCATION.

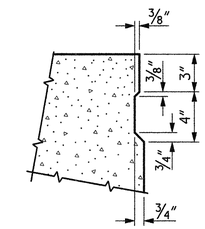


## SHEAR KEY DETAIL

NOTE: OMIT SHEAR KEY ON OUTSIDE FACE OF EXTERIOR CORED SLABS.

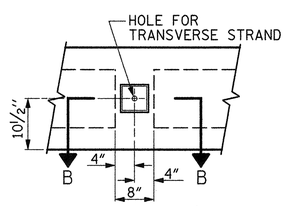


ELEVATION VIEW

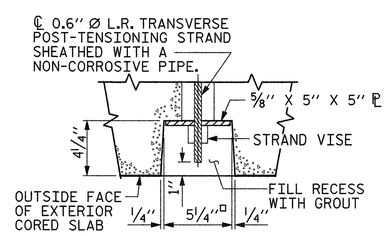


SECTION B-B

## GROUTED RECESS AT END OF POST-TENSIONED STRAND OF CORED SLABS

PROJECT NO. 17BP.4.R.11
EDGECOMBE COUNTY
STATION: 12+29.10 -L-

SHEET 1 OF 3

THIS STANDARD DRAWING REVIEWED & ADOPTED FOR USE AT THE REFERENCED LOCATION BY THE UNDERSIGNED:

NORTH CAROLINA PROFESSIONAL SEAL ENGINEER 19661 L. KEVIN AUSTIN 12/19/12

PLANS PREPARED BY:
MULKEY ENGINEERS & CONSULTANTS
PO Box 33127 RALEIGH, N.C. 27636 (919) 851-1912 (919) 851-1918 (FAX) WWW.MULKEYINC.COM
NC LICENSE NO. C-1021

STATE OF NORTH CAROLINA
DEPARTMENT OF TRANSPORTATION
RALEIGH

STANDARD
3'-0" X 1'-9"
PRESTRESSED CONCRETE CORED SLAB UNIT
90° SKEW

| REVISIONS | | | | | | SHEET NO. |
|---|---|---|---|---|---|---|
| NO. | BY: | DATE: | NO. | BY: | DATE: | 9 |
| 1 | | | 3 | | | TOTAL SHEETS |
| 2 | | | 4 | | | 24 |

STD. NO. 21" PCS2_30_90S

| | | | |
|---|---|---|---|
| ASSEMBLED BY : | W. B. ALLEN | DATE : | 10/12 |
| CHECKED BY : | W. A. DAVIS | DATE : | 10/12 |
| DRAWN BY : | DGE 5/09 | REV. 12/11 | MAA/AAC |
| CHECKED BY : | BCH 6/09 | | |

10/19/2012 10:59:48 AM R:\Structures\Edgecombe 57.SD.CS.Std.dgn

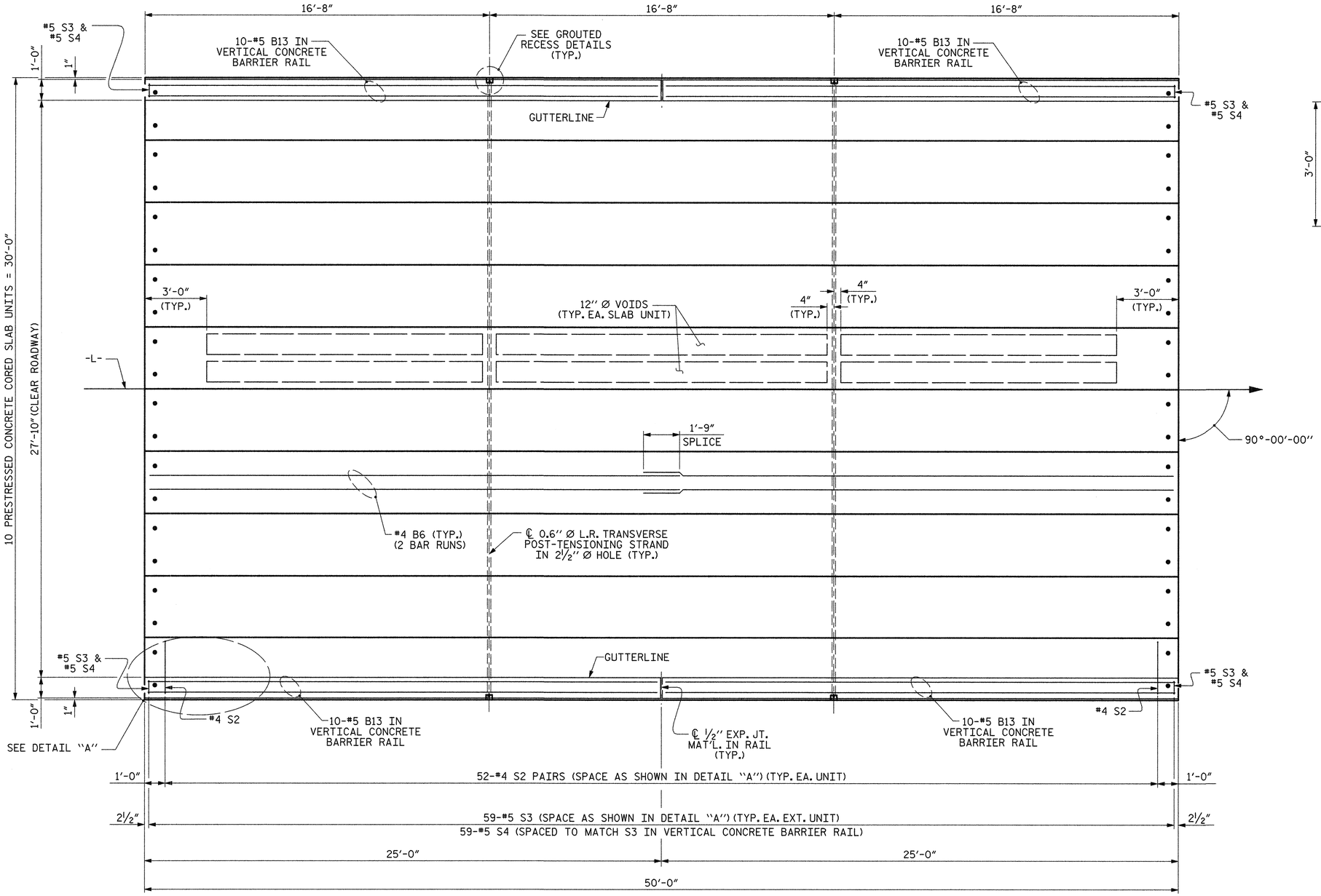


## PLAN OF UNIT

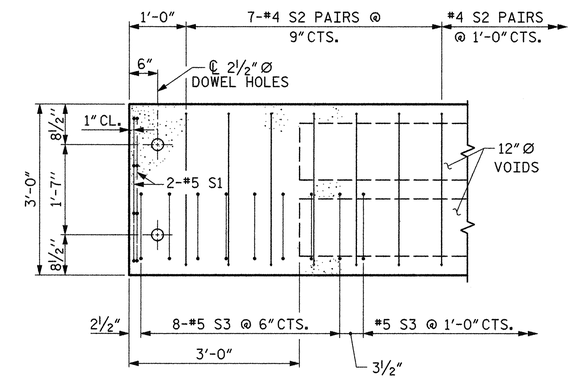


## DETAIL "A"

NOTE: EXTERIOR UNIT SHOWN - INTERIOR UNIT SIMILAR EXCEPT OMIT #5 S3 BARS.

PROJECT NO. 17BP.4.R.11

EDGECOMBE COUNTY

STATION: 12+29.10 -L-

SHEET 2 OF 3

STATE OF NORTH CAROLINA
DEPARTMENT OF TRANSPORTATION
RALEIGH

# PLAN OF 50' UNIT 27'-10" CLEAR ROADWAY 90° SKEW

THIS STANDARD DRAWING REVIEWED & ADOPTED FOR USE AT THE REFERENCED LOCATION BY THE UNDERSIGNED:

NORTH CAROLINA PROFESSIONAL SEAL 19661 ENGINEER KEVIN AUSTIN 12/19/12

PLANS PREPARED BY:
MULKEY ENGINEERS & CONSULTANTS
PO BOX 33127 RALEIGH, N.C. 27636
(919) 851-1912 (PHONE)
(919) 851-1918 (FAX)
WWW.MULKEYINC.COM
NC LICENSE NO. C-1031

| REVISIONS | | | | | | SHEET NO. |
|---|---|---|---|---|---|---|
| NO. | BY: | DATE: | NO. | BY: | DATE: | 10 |
| 1 | | | 3 | | | TOTAL SHEETS |
| 2 | | | 4 | | | 24 |

| | | | |
|---|---|---|---|
| ASSEMBLED BY : | W. B. ALLEN | DATE : | 10/12 |
| CHECKED BY : | W. A. DAVIS | DATE : | 10/12 |
| DRAWN BY : | DGE 3/09 | REV. 12/5/11 | MAA/AAC |
| CHECKED BY : | BCH 3/09 | | |

12/19/2012 10:00:21 AM R:\Structures\Edgecombe 57_SD_CS_02.dgn

STD. NO. 21" PCS_30_90S_50L

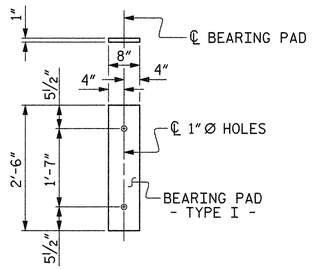


FIXED END
( TYPE I - 20 REQ'D )

## ELASTOMERIC BEARING DETAILS

ELASTOMER IN ALL BEARINGS SHALL BE 60 DUROMETER HARDNESS.

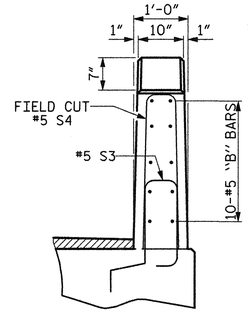


END VIEW

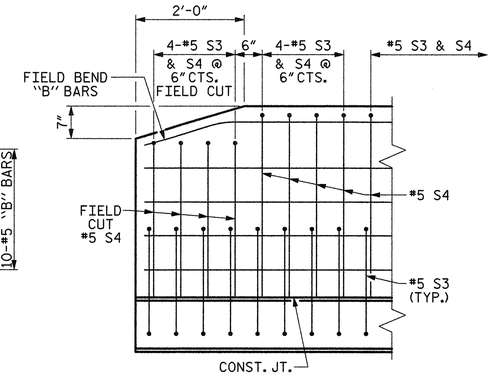


SIDE VIEW

## END OF RAIL DETAILS

### BAR TYPES

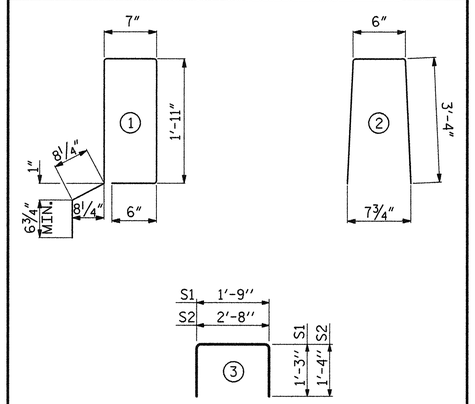


ALL BAR DIMENSIONS ARE OUT TO OUT

## NOTES

ALL PRESTRESSING STRANDS SHALL BE 7-WIRE LOW RELAXATION GRADE 270 STRANDS AND SHALL CONFORM TO AASHTO M203 EXCEPT FOR SAMPLING REQUIREMENTS WHICH SHALL BE IN ACCORDANCE WITH THE STANDARD SPECIFICATIONS.

ALL REINFORCING STEEL CAST WITH THE CORED SLAB SECTIONS SHALL BE GRADE 60 AND SHALL BE INCLUDED IN THE UNIT PRICE BID FOR PRESTRESSED CONCRETE CORED SLABS.

RECESSES FOR TRANSVERSE STRANDS SHALL BE GROUTED AFTER THE TENSIONING OF THE STRANDS.

THE 2½"Ø DOWEL HOLES AT FIXED ENDS OF SLAB SECTIONS SHALL BE FILLED WITH NON-SHRINK GROUT.

THE BACKER RODS SHALL CONFORM TO THE REQUIREMENTS OF TYPE M BOND BREAKER. SEE SECTION 1028 OF THE STANDARD SPECIFICATIONS.

WHEN CORED SLABS ARE CAST, AN INTERNAL HOLD-DOWN SYSTEM SHALL BE EMPLOYED TO PREVENT VOIDS FROM RISING OR MOVING SIDEWAYS. AT LEAST SIX WEEKS PRIOR TO CASTING CORED SLABS, THE CONTRACTOR SHALL SUBMIT TO THE ENGINEER FOR REVIEW AND COMMENT, DETAILED DRAWINGS OF THE PROPOSED HOLD-DOWN SYSTEM. IN ADDITION TO STRUCTURAL DETAILS, LOCATION AND SPACING OF THE HOLD-DOWNS SHALL BE INDICATED.

ALL REINFORCING STEEL IN THE VERTICAL CONCRETE BARRIER RAIL SHALL BE EPOXY COATED.

PRESTRESSING STRANDS SHALL BE CUT FLUSH WITH THE CORED SLAB UNIT ENDS.

APPLY EPOXY PROTECTIVE COATING TO CORED SLAB UNIT ENDS.

GROOVED CONTRACTION JOINTS, ½" IN DEPTH, SHALL BE TOOLED IN ALL EXPOSED FACES OF THE BARRIER RAIL AND IN ACCORDANCE WITH ARTICLE 825-10(B) OF THE STANDARD SPECIFICATIONS. A CONTRACTION JOINT SHALL BE LOCATED AT EACH THIRD POINT BETWEEN BARRIER RAIL EXPANSION JOINTS. ONLY ONE CONTRACTION JOINT IS REQUIRED AT MIDPOINT OF BARRIER RAIL SEGMENTS LESS THAN 20 FEET IN LENGTH AND NO CONTRACTION JOINTS ARE REQUIRED FOR THOSE SEGMENTS LESS THAN 10 FEET IN LENGTH.

TRANSVERSE POST TENSIONING OF THE CORED SLAB UNITS SHALL BE DONE IN ACCORDANCE WITH THE STANDARD SPECIFICATIONS.

THE TRANSFER OF LOAD FROM THE ANCHORAGES TO THE CORED SLAB UNIT SHALL BE DONE WHEN THE CONCRETE HAS REACHED A COMPRESSIVE STRENGTH OF NOT LESS THAN THE REQUIRED STRENGTH SHOWN IN THE "CONCRETE RELEASE STRENGTH" TABLE.

FOR GROUT FOR STRUCTURES, SEE SPECIAL PROVISIONS.

### CORED SLABS REQUIRED

| | NUMBER | LENGTH | TOTAL LENGTH |
|---|---|---|---|
| 50' UNIT | | | |
| EXTERIOR C.S. | 2 | 50'-0" | 100'-0" |
| INTERIOR C.S. | 8 | 50'-0" | 400'-0" |
| TOTAL | 10 | | 500'-0" |

### DEAD LOAD DEFLECTION AND CAMBER

| | 3'-0" x 1'-9" |
|---|---|
| 50' CORED SLAB UNIT | 0.6"Ø L.R. STRAND |
| CAMBER ( SLAB ALONE IN PLACE ) | 2½" ↑ |
| DEFLECTION DUE TO SUPERIMPOSED DEAD LOAD** | ¼" ↓ |
| FINAL CAMBER | 2¼" ↑ |

** INCLUDES FUTURE WEARING SURFACE

### GRADE 270 STRANDS

| | 0.6"Ø L.R. |
|---|---|
| AREA ( SQUARE INCHES ) | 0.217 |
| ULTIMATE STRENGTH ( LBS. PER STRAND ) | 58,600 |
| APPLIED PRESTRESS ( LBS. PER STRAND ) | 43,950 |

### BILL OF MATERIAL FOR VERTICAL CONCRETE BARRIER RAIL

| BAR | BARS PER PAIR OF EXTERIOR UNITS | TOTAL NO. | SIZE | TYPE | LENGTH | WEIGHT |
|---|---|---|---|---|---|---|
| | 50' UNIT | | | | | |
| *B13 | 40 | 40 | #5 | STR | 24'-7" | 1026 |
| * S4 | 118 | 118 | #5 | 2 | 7'-2" | 882 |
| * EPOXY COATED REINFORCING STEEL | | | | LBS. | | 1908 |
| CLASS AA CONCRETE | | | | CU.YDS. | | 13.1 |
| TOTAL VERTICAL CONCRETE BARRIER RAIL | | | | LN. FT. | | 100.25 |

### BILL OF MATERIAL FOR ONE 50' CORED SLAB UNIT

| BAR | NUMBER | SIZE | TYPE | EXTERIOR UNIT LENGTH | EXTERIOR UNIT WEIGHT | INTERIOR UNIT LENGTH | INTERIOR UNIT WEIGHT |
|---|---|---|---|---|---|---|---|
| B6 | 4 | #4 | STR | 25'-9" | 69 | 25'-9" | 69 |
| S1 | 8 | #5 | 3 | 4'-3" | 35 | 4'-3" | 35 |
| S2 | 104 | #4 | 3 | 5'-4" | 371 | 5'-4" | 371 |
| * S3 | 59 | #5 | 1 | 6'-2" | 379 | | |
| REINFORCING STEEL | | | LBS. | | 475 | | 475 |
| * EPOXY COATED REINFORCING STEEL | | | LBS. | | 379 | | |
| 6500 P.S.I. CONCRETE | | | CU. YDS. | | 7.1 | | 7.1 |
| 0.6"Ø L.R. STRANDS | | | No. | | 19 | | 19 |

### CONCRETE RELEASE STRENGTH

| UNIT | PSI |
|---|---|
| 50' UNITS | 4900 |

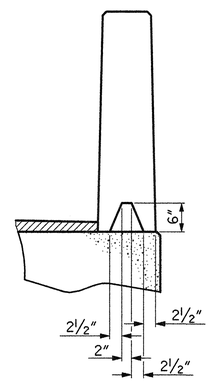


SECTION S-S
AT DAM IN OPEN JOINT
(THIS IS TO BE USED ONLY WHEN SLIP FORM IS USED)

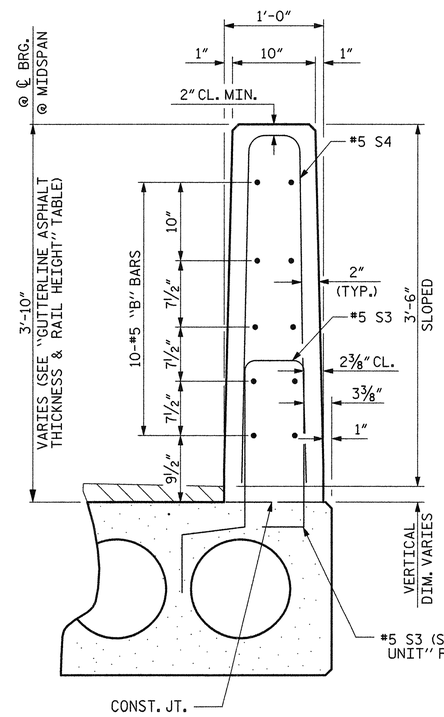


VERTICAL CONCRETE BARRIER RAIL SECTION

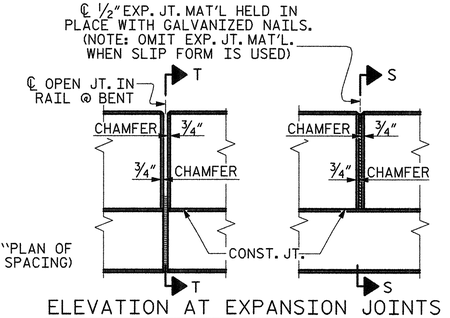


ELEVATION AT EXPANSION JOINTS

### GUTTERLINE ASPHALT THICKNESS & RAIL HEIGHT

| 27'-10" CLEAR ROADWAY | ASPHALT OVERLAY THICKNESS | RAIL HEIGHT |
|---|---|---|
| | @ MID-SPAN | @ MID-SPAN |
| | NORMAL CROWN SECTION | |
| 50' UNITS | 1½" | 3'-7¾" |

PROJECT NO. 17BP.4.R.11
EDGECOMBE COUNTY
STATION: 12+29.10 -L-

SHEET 3 OF 3

THIS STANDARD DRAWING REVIEWED & ADOPTED FOR USE AT THE REFERENCED LOCATION BY THE UNDERSIGNED:

NORTH CAROLINA PROFESSIONAL SEAL 19661 ENGINEER KEVIN AUSTIN 12/18/12

PLANS PREPARED BY:
MULKEY ENGINEERS & CONSULTANTS
PO Box 33127 Raleigh, N.C. 27636
(919) 851-1912
(919) 851-1918 (FAX)
WWW.MULKEYINC.COM
NC LICENSE NO. C-1031

STATE OF NORTH CAROLINA
DEPARTMENT OF TRANSPORTATION
RALEIGH

STANDARD
3'-0" X 1'-9"
PRESTRESSED CONCRETE CORED SLAB UNIT
90° SKEW

| REVISIONS | | | | | | SHEET NO. |
|---|---|---|---|---|---|---|
| NO. | BY: | DATE: | NO. | BY: | DATE: | 11 |
| 1 | | | 3 | | | TOTAL SHEETS |
| 2 | | | 4 | | | 24 |

STD. NO. 21" PCS3_30_90S

| | | | |
|---|---|---|---|
| ASSEMBLED BY : | W. B. ALLEN | DATE : | 10/12 |
| CHECKED BY : | W. A. DAVIS | DATE : | 10/12 |
| DRAWN BY : DGE 5/09 | REV. 12/11 | MAA/AAC | |
| CHECKED BY : BCH 6/09 | | | |

12/19/2012 11:06:15 AM R:\Structures\Edgecombe 51_50_DS_03.dgn

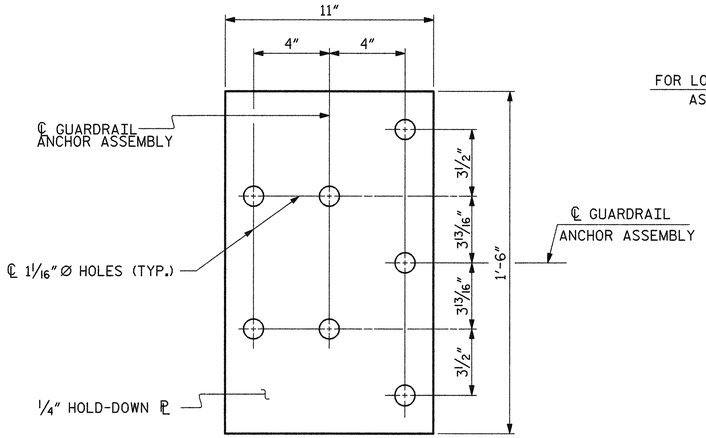


PLAN

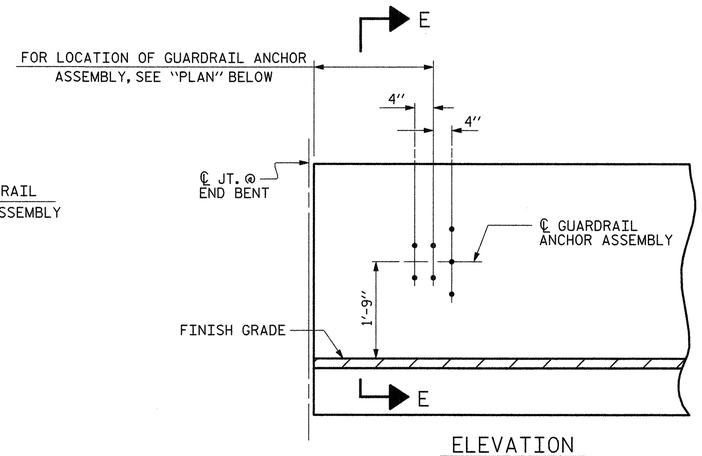


ELEVATION

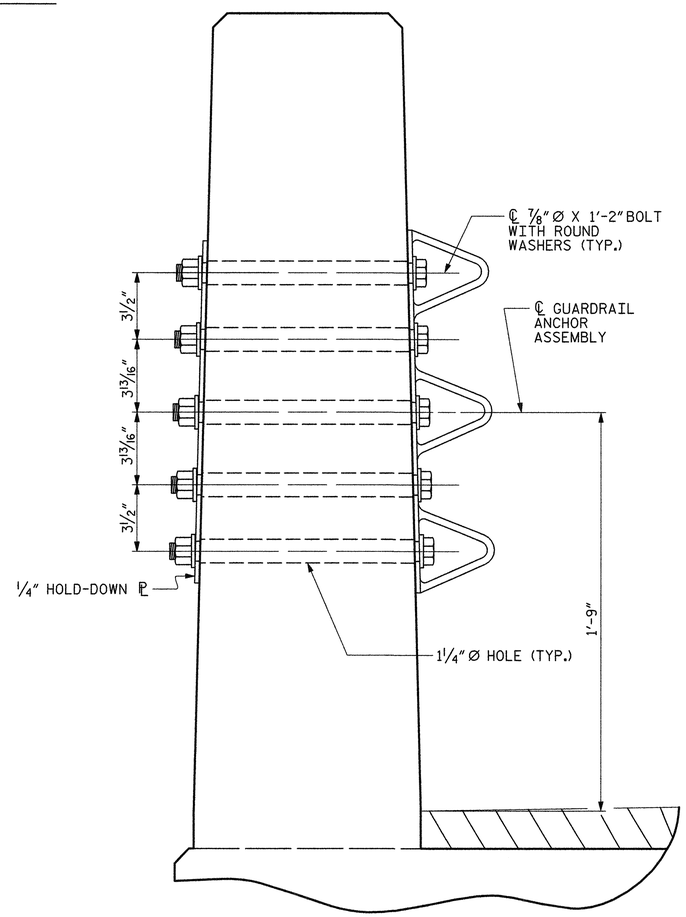


SECTION E-E

# GUARDRAIL ANCHOR ASSEMBLY DETAILS

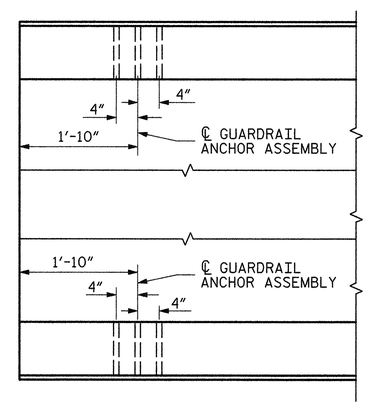


PLAN

# LOCATION OF ANCHORS FOR GUARDRAIL

END BENT #1 SHOWN, END BENT #2 SIMILAR.

## NOTES

THE GUARDRAIL ANCHOR ASSEMBLY SHALL CONSIST OF A 1/4" HOLD DOWN PLATE AND 7 - 7/8" Ø BOLTS WITH NUTS AND WASHERS.

THE HOLD-DOWN PLATE SHALL CONFORM TO AASHTO M270 GRADE 36. AFTER FABRICATION, THE HOLD-DOWN PLATE SHALL BE HOT-DIP GALVANIZED IN ACCORDANCE WITH AASHTO M111.

BOLTS SHALL CONFORM TO THE REQUIREMENTS OF ASTM A307 AND NUTS SHALL CONFORM TO THE REQUIREMENTS OF AASHTO M291. BOLTS, NUTS AND WASHERS SHALL BE GALVANIZED. (AT THE CONTRACTOR'S OPTION, STAINLESS STEEL BOLTS, NUTS AND WASHERS MAY BE USED AS AN ALTERNATE FOR THE 7/8" Ø GALVANIZED BOLTS, NUTS AND WASHERS. THEY SHALL CONFORM TO OR EXCEED THE MECHANICAL REQUIREMENTS OF ASTM A307. THE USE OF THIS ALTERNATE SHALL BE APPROVED BY THE ENGINEER.)

THE GUARDRAIL ANCHOR ASSEMBLY IS REQUIRED AT ALL POINTS WHERE APPROACH GUARDRAIL IS TO BE ATTACHED TO THE END OF BARRIER RAIL. FOR POINTS OF ATTACHMENT, SEE SKETCH.

AFTER INSTALLATION, THE EXPOSED THREAD OF THE BOLT SHALL BE BURRED WITH A SHARP POINTED TOOL.

THE COST OF THE GUARDRAIL ANCHOR ASSEMBLY SHALL BE INCLUDED IN THE UNIT CONTRACT PRICE BID FOR VERTICAL CONCRETE BARRIER RAIL.

THE VERTICAL REINFORCING BARS MAY BE SHIFTED SLIGHTLY IN THE VERTICAL CONCRETE BARRIER RAIL TO CLEAR ASSEMBLY BOLTS.

THE 1 1/4" Ø HOLES SHALL BE FORMED OR DRILLED WITH A CORE BIT. IMPACT TOOLS WILL NOT BE PERMITTED. ANY CONCRETE DAMAGED BY THIS WORK SHALL BE REPAIRED TO THE SATISFACTION OF THE ENGINEER.

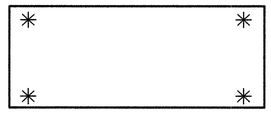

# SKETCH SHOWING POINTS OF ATTACHMENT

✳ DENOTES GUARDRAIL ANCHOR ASSEMBLY

PROJECT NO. 17BP.4.R.11

EDGECOMBE COUNTY

STATION: 12+29.10 -L-

| | | | |
|---|---|---|---|
| ASSEMBLED BY : W. B. ALLEN | | DATE : 10/12 | |
| CHECKED BY : W. A. DAVIS | | DATE : 10/12 | |
| DRAWN BY : MAA 5/10 | ADDED 5/6/10 | | |
| CHECKED BY : GM 5/10 | REV. 10/1/11 | MAA/GM | |
| | REV. 12/5/11 | MAA/GM | |

PLANS PREPARED BY:
MULKEY ENGINEERS & CONSULTANTS
PO Box 33127
RALEIGH, N.C. 27636
(919) 851-1912
(919) 851-1918 (FAX)
WWW.MULKEYINC.COM
NC LICENSE NO. C-1021

THIS STANDARD DRAWING REVIEWED & ADOPTED FOR USE AT THE REFERENCED LOCATION BY THE UNDERSIGNED:

NORTH CAROLINA PROFESSIONAL SEAL 19661 ENGINEER KEVIN AUSTIN
12/19/12

STATE OF NORTH CAROLINA
DEPARTMENT OF TRANSPORTATION
RALEIGH

STANDARD
GUARDRAIL ANCHORAGE FOR VERTICAL CONCRETE BARRIER RAIL

| REVISIONS | | | | | | SHEET NO. |
|---|---|---|---|---|---|---|
| NO. | BY: | DATE: | NO. | BY: | DATE: | 12 |
| 1 | | | 3 | | | TOTAL SHEETS |
| 2 | | | 4 | | | 24 |

(SHT 1) STD. NO. GRA3

12/19/2012 10:01:58 AM R:\Structures\Edgecombe 17.5D.GR.01.dgn

## NOTES

STIRRUPS IN CAP MAY BE SHIFTED AS NECESSARY TO CLEAR DOWELS.

THE CONCRETE IN THE SHADED AREA OF THE WING SHALL BE POURED AFTER THE VERTICAL CONCRETE BARRIER RAIL IS CAST IF SLIP FORMING IS USED.

FOR PILE SPLICE DETAILS, SEE SHEET 4 OF 4.

FOR WING DETAILS, SEE SHEET 3 OF 4.

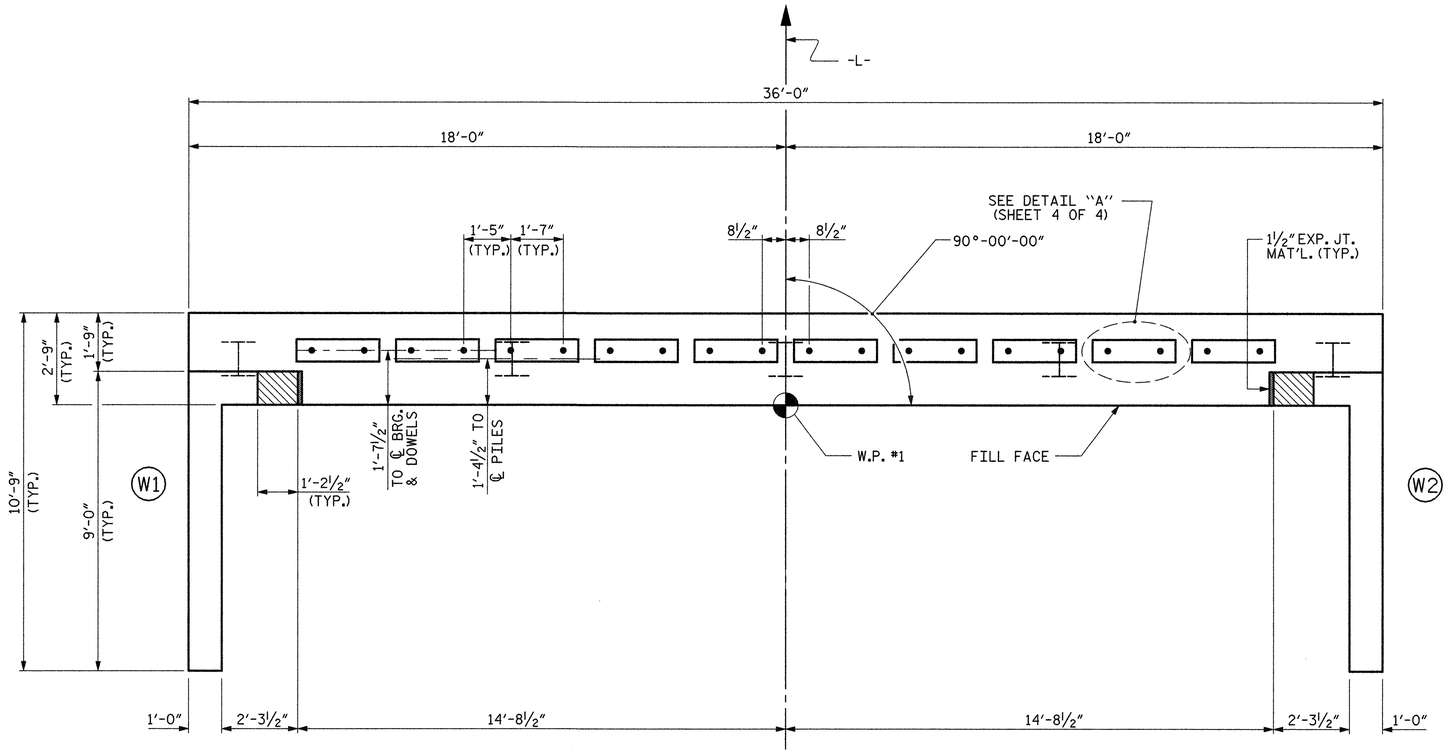


## PLAN

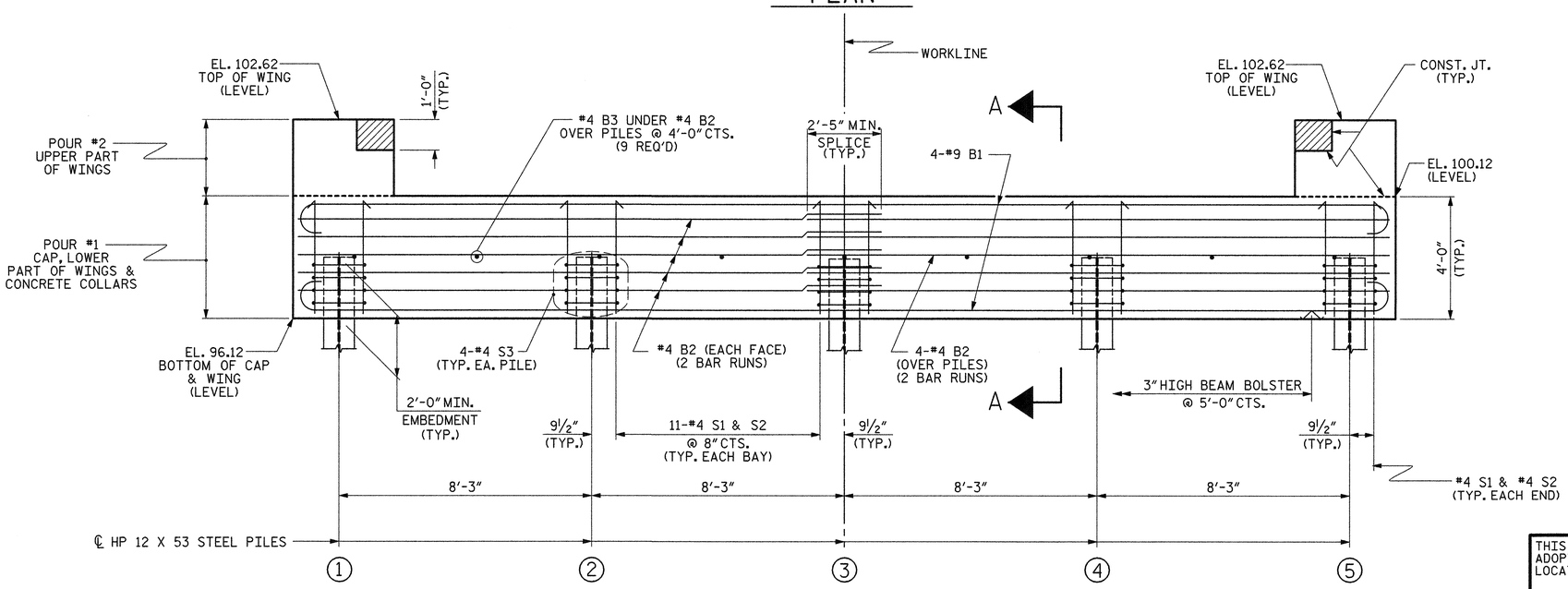


## ELEVATION

WINGS NOT SHOWN FOR CLARITY.
FOR SECTION A-A, SEE SHEET 4 OF 4.
CONCRETE COLLARS FOR STEEL PILES NOT SHOWN IN PLAN AND ELEVATION VIEWS FOR CLARITY.
SEE "CORROSION PROTECTION FOR STEEL PILES DETAIL", SHEET 4 OF 4.

PROJECT NO. 17BP.4.R.11
EDGECOMBE COUNTY
STATION: 12+29.10 -L-

SHEET 1 OF 4

STATE OF NORTH CAROLINA
DEPARTMENT OF TRANSPORTATION
RALEIGH

SUBSTRUCTURE

END BENT No. 1

THIS STANDARD DRAWING REVIEWED & ADOPTED FOR USE AT THE REFERENCED LOCATION BY THE UNDERSIGNED:

NORTH CAROLINA PROFESSIONAL SEAL ENGINEER 19661 L. KEVIN AUSTIN 12/14/12

PLANS PREPARED BY:
MULKEY ENGINEERS & CONSULTANTS
PO Box 33127 RALEIGH, N.C. 27636
(919) 851-1912
(919) 851-1918 (FAX)
WWW.MULKEYINC.COM
NC LICENSE NO. C-1051

| REVISIONS | | | | | | SHEET NO. |
|---|---|---|---|---|---|---|
| NO. | BY: | DATE: | NO. | BY: | DATE: | 13 |
| 1 | | | 3 | | | TOTAL SHEETS |
| 2 | | | 4 | | | 24 |

| | | |
|---|---|---|
| ASSEMBLED BY : W. B. ALLEN | DATE : 10/12 | |
| CHECKED BY : W. A. DAVIS | DATE : 10/12 | |
| DRAWN BY : WJH 12/11 | | |
| CHECKED BY : AAC 12/11 | | |

12/19/2012 11:02:44 AM R:\Structures\Edgecombe 57_SD_EL_00.dgn

STD. NO. EB_30_90S4

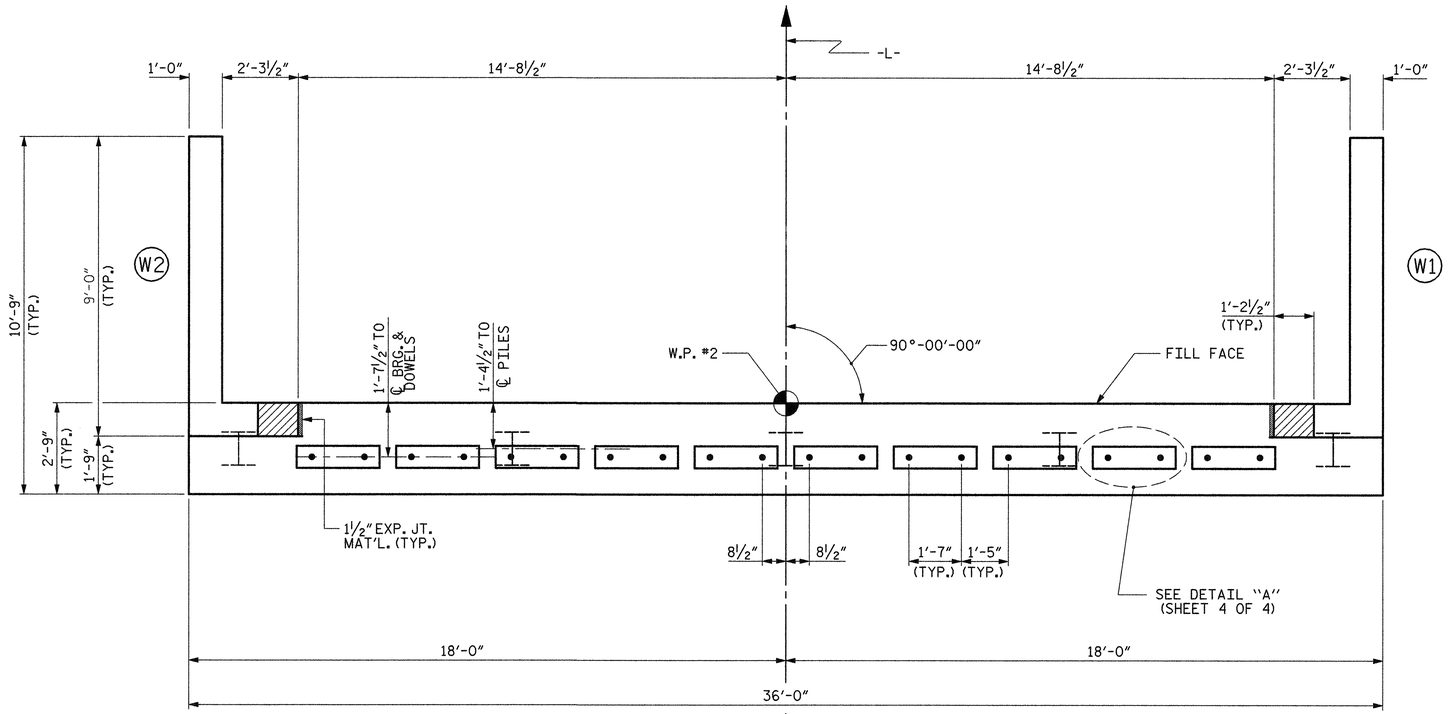


## PLAN

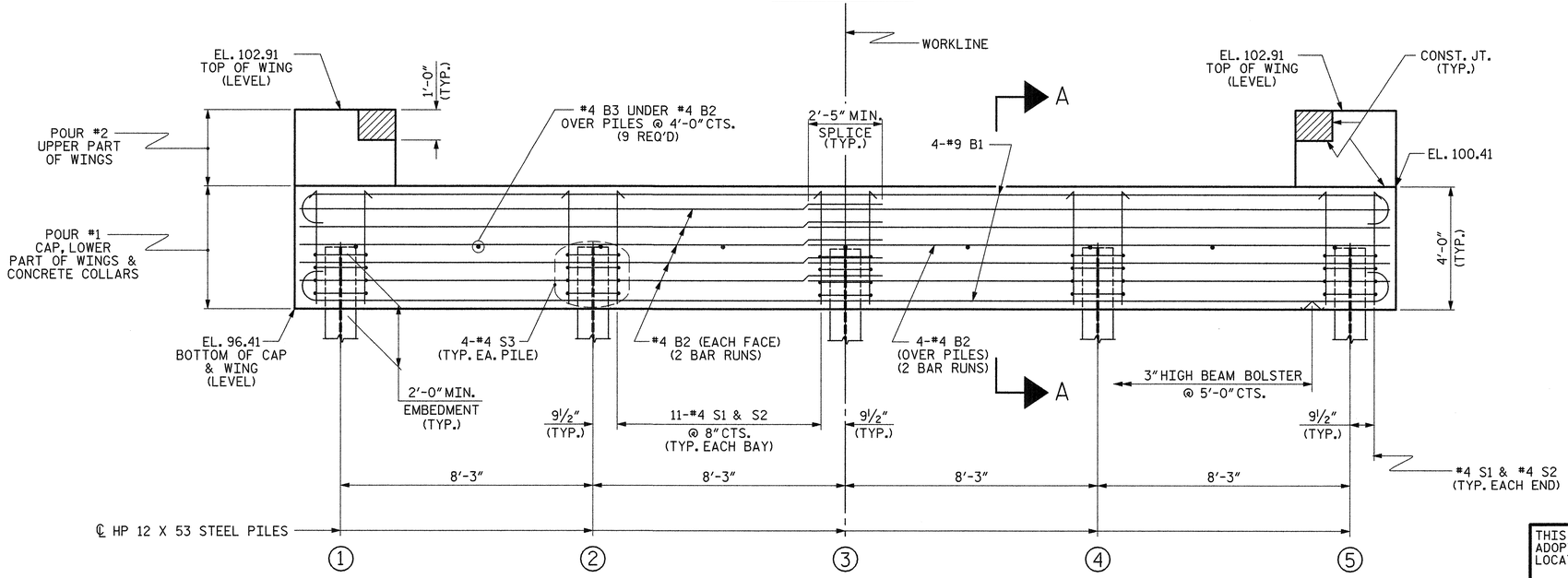


## ELEVATION

WINGS NOT SHOWN FOR CLARITY.
FOR SECTION A-A, SEE SHEET 4 OF 4.
CONCRETE COLLARS FOR STEEL PILES NOT SHOWN IN PLAN AND ELEVATION VIEWS FOR CLARITY.
SEE "CORROSION PROTECTION FOR STEEL PILES DETAIL", SHEET 4 OF 4.

## NOTES

STIRRUPS IN CAP MAY BE SHIFTED AS NECESSARY TO CLEAR DOWELS.

THE CONCRETE IN THE SHADED AREA OF THE WING SHALL BE POURED AFTER THE VERTICAL CONCRETE BARRIER RAIL IS CAST IF SLIP FORMING IS USED.

FOR PILE SPLICE DETAILS, SEE SHEET 4 OF 4.

FOR WING DETAILS, SEE SHEET 3 OF 4.

PROJECT NO. 17BP.4.R.11
EDGECOMBE COUNTY
STATION: 12+29.10 -L-

SHEET 2 OF 4

STATE OF NORTH CAROLINA
DEPARTMENT OF TRANSPORTATION
RALEIGH

SUBSTRUCTURE

END BENT No. 2

THIS STANDARD DRAWING REVIEWED & ADOPTED FOR USE AT THE REFERENCED LOCATION BY THE UNDERSIGNED:

NORTH CAROLINA PROFESSIONAL SEAL ENGINEER 19661 L. KEVIN AUSTIN 12/19/12

PLANS PREPARED BY:
MULKEY ENGINEERS & CONSULTANTS
PO Box 33127
RALEIGH, N.C. 27636
(919) 851-1912
(919) 851-1918 (FAX)
WWW.MULKEYINC.COM
NC LICENSE NO. C-1031

| REVISIONS | | | | | | SHEET NO. |
|---|---|---|---|---|---|---|
| NO. | BY: | DATE: | NO. | BY: | DATE: | 14 |
| 1 | | | 3 | | | TOTAL SHEETS |
| 2 | | | 4 | | | 24 |

| | | | |
|---|---|---|---|
| ASSEMBLED BY : | W. B. ALLEN | DATE : | 10/12 |
| CHECKED BY : | W. A. DAVIS | DATE : | 10/12 |
| DRAWN BY : | WJH | 12/11 | |
| CHECKED BY : | AAC | 12/11 | |

STD. NO. EB_30_90S4

12/19/2012 11:03:16 AM R:\Structures\Edgecombe 17.SD.E2.0.dgn

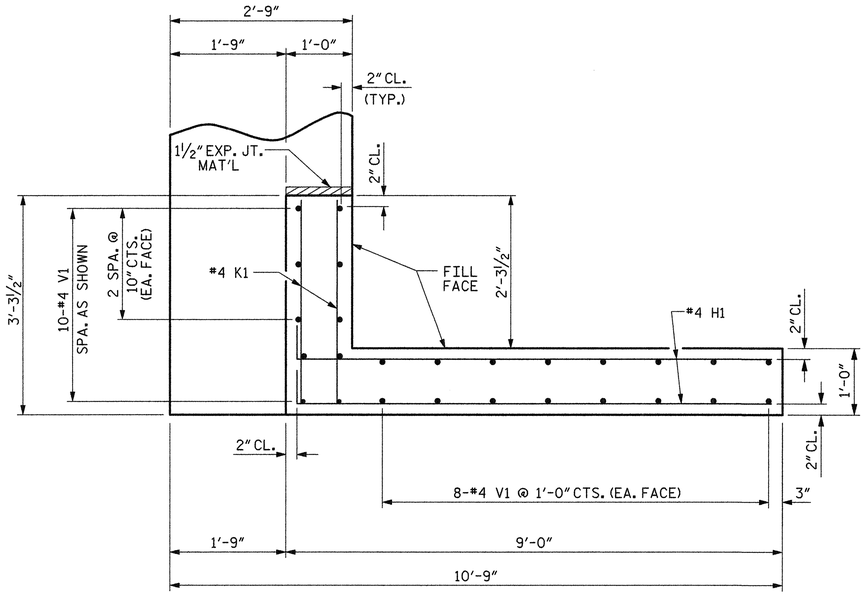


PLAN OF WING (W1)

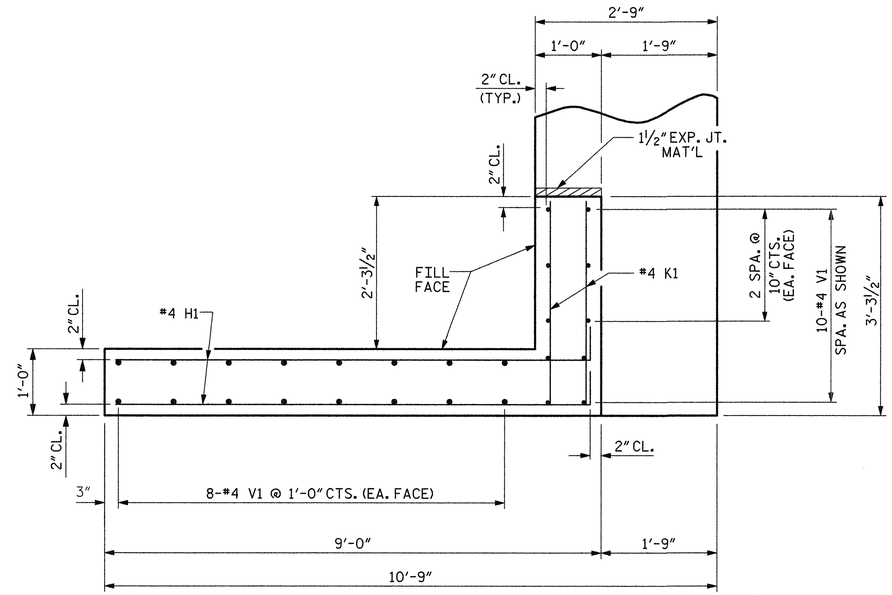


PLAN OF WING (W2)

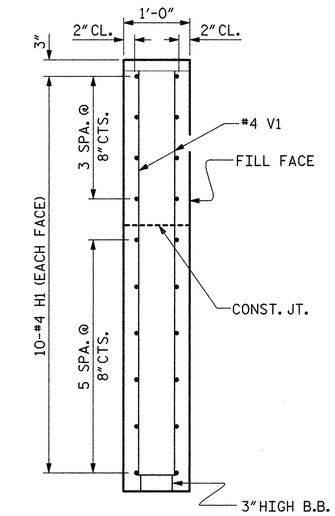


SECTION X-X

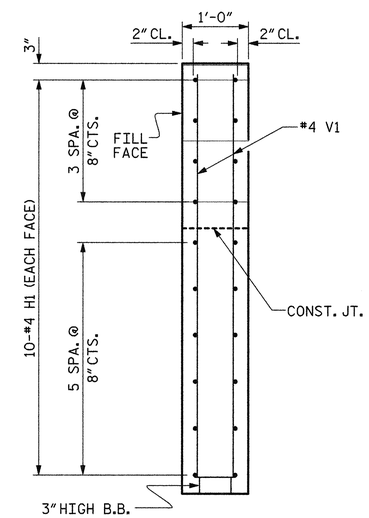


SECTION Y-Y

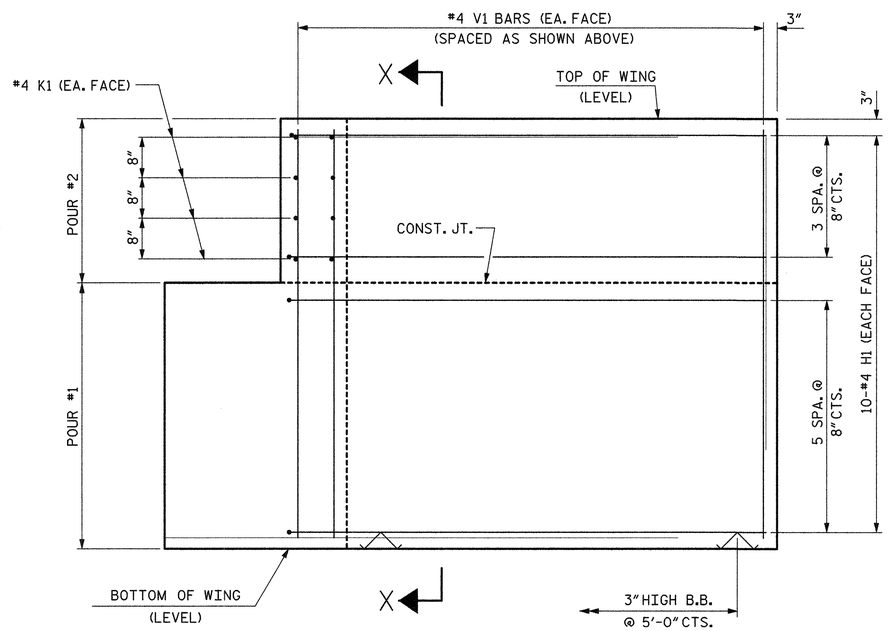


ELEVATION OF WING (W1)

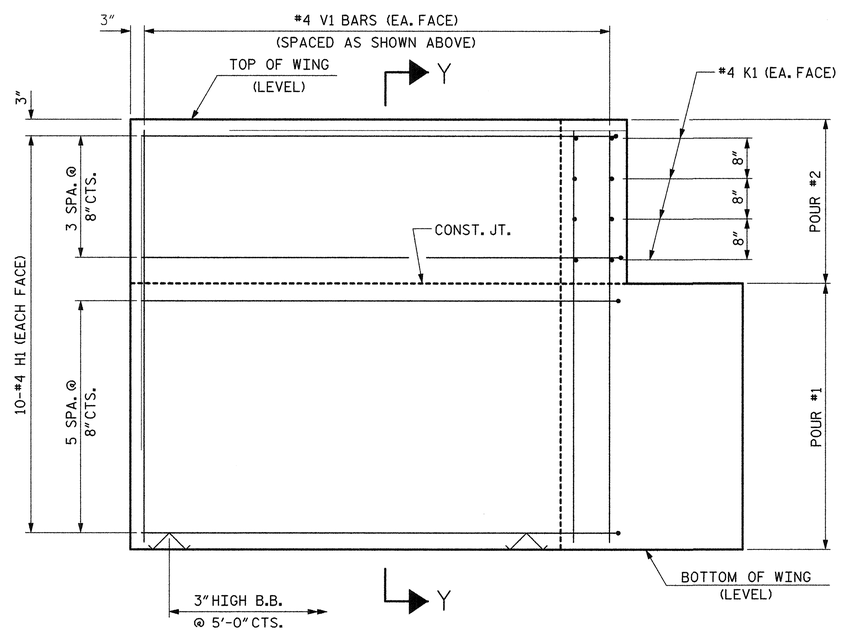


ELEVATION OF WING (W2)

WING DETAILS

PROJECT NO. 17BP.4.R.11

EDGECOMBE COUNTY

STATION: 12+29.10 -L-

SHEET 3 OF 4

THIS STANDARD DRAWING REVIEWED & ADOPTED FOR USE AT THE REFERENCED LOCATION BY THE UNDERSIGNED:

NORTH CAROLINA PROFESSIONAL SEAL ENGINEER 19661 L. KEVIN AUSTIN 12/14/12

PLANS PREPARED BY:

MULKEY ENGINEERS & CONSULTANTS
PO Box 33127
Raleigh, N.C. 27636
(919) 851-1912
(919) 851-1918 (FAX)
WWW.MULKEYINC.COM
NC LICENSE NO. C-1031

STATE OF NORTH CAROLINA
DEPARTMENT OF TRANSPORTATION
RALEIGH

SUBSTRUCTURE

END BENT
WING DETAILS

| REVISIONS | | | | | | | | SHEET NO. |
|---|---|---|---|---|---|---|---|---|
| NO. | BY: | DATE: | NO. | BY: | DATE: | | | 15 |
| 1 | | | 3 | | | | | TOTAL SHEETS |
| 2 | | | 4 | | | | | 24 |

| | | | |
|---|---|---|---|
| ASSEMBLED BY : | W. B. ALLEN | DATE : | 10/12 |
| CHECKED BY : | W. A. DAVIS | DATE : | 10/12 |
| DRAWN BY : WJH | 12/11 | | |
| CHECKED BY : AAC | 12/11 | | |

STD. NO. EB_30_90S4

12/19/2012 11:04:23 AM R:\Structures\Edgecombe 57.50.EB2.01.dgn

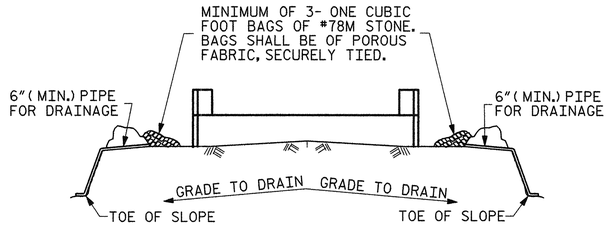


BAGGED STONE AND PIPE SHALL BE PLACED IMMEDIATELY AFTER COMPLETION OF END BENT EXCAVATION. PIPE MAY BE EITHER CONCRETE, CORRUGATED STEEL, CORRUGATED ALUMINUM ALLOY, OR CORRUGATED PLASTIC. PERFORATED PIPE WILL NOT BE ALLOWED.

BAGGED STONE SHALL REMAIN IN PLACE UNTIL THE ENGINEER DIRECTS THAT IT BE REMOVED. THE CONTRACTOR SHALL REMOVE AND DISPOSE OF SILT ACCUMULATIONS AT BAGGED STONE WHEN SO DIRECTED BY THE ENGINEER. BAGS SHALL BE REMOVED AND REPLACED WHENEVER THE ENGINEER DETERMINES THAT THEY HAVE DETERIORATED AND LOST THEIR EFFECTIVENESS.

NO SEPARATE PAYMENT WILL BE MADE FOR THIS WORK AND THE ENTIRE COST OF THIS WORK SHALL BE INCLUDED IN THE UNIT CONTRACT PRICE BID FOR THE SEVERAL PAY ITEMS.

## TEMPORARY DRAINAGE AT END BENT

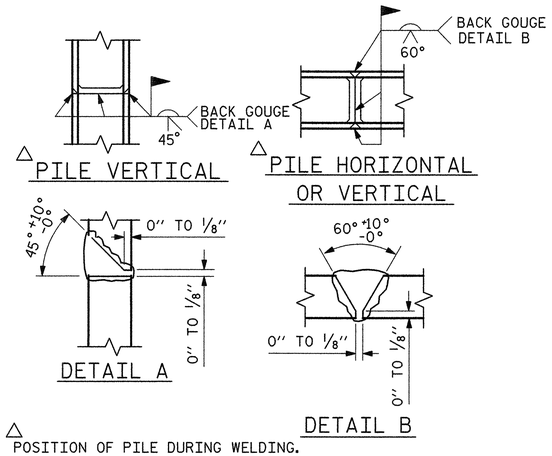


△ POSITION OF PILE DURING WELDING.

## PILE SPLICE DETAILS

### BAR TYPES

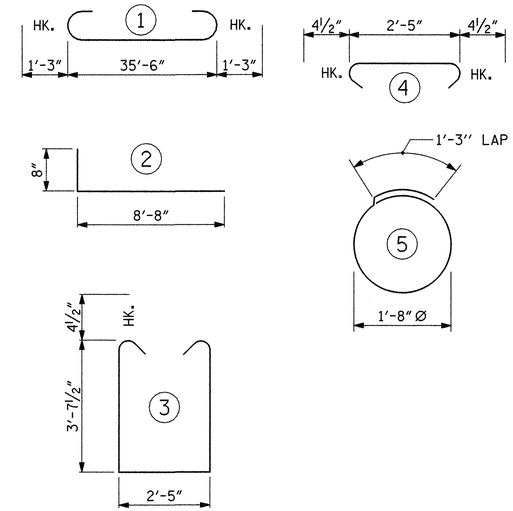


ALL BAR DIMENSIONS ARE OUT TO OUT.

| END BENT No. 1 | | END BENT No. 2 | |
|---|---|---|---|
| HP 12 X 53 STEEL PILES | | HP 12 X 53 STEEL PILES | |
| NO: 5 | LIN. FT.= 175 | NO: 5 | LIN. FT.= 175 |

### BILL OF MATERIAL FOR ONE END BENT

| BAR | NO. | SIZE | TYPE | LENGTH | WEIGHT |
|---|---|---|---|---|---|
| B1 | 8 | #9 | 1 | 38'-0" | 1034 |
| B2 | 28 | #4 | STR | 19'-1" | 357 |
| B3 | 9 | #4 | STR | 2'-5" | 15 |
| D1 | 20 | #6 | STR | 1'-6" | 45 |
| H1 | 40 | #4 | 2 | 9'-4" | 249 |
| K1 | 16 | #4 | STR | 2'-11" | 31 |
| S1 | 46 | #4 | 3 | 10'-5" | 320 |
| S2 | 46 | #4 | 4 | 3'-2" | 97 |
| S3 | 20 | #4 | 5 | 6'-6" | 87 |
| V1 | 52 | #4 | STR | 6'-2" | 214 |
| REINFORCING STEEL (FOR ONE END BENT) | | | | | 2449 LBS. |

CLASS A CONCRETE BREAKDOWN (FOR ONE END BENT)

| | | |
|---|---|---|
| POUR #1 | CAP, LOWER PART OF WINGS & COLLARS | 17.9 C.Y. |
| POUR #2 | UPPER PART OF WINGS | 2.1 C.Y. |
| TOTAL CLASS A CONCRETE | | 20.0 C.Y. |

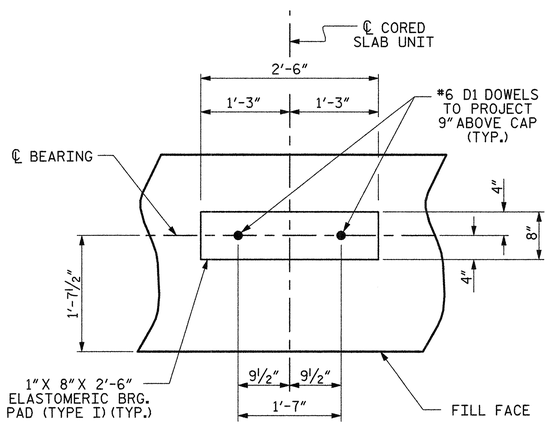


## DETAIL "A"

(END BENT No. 1 SHOWN, END BENT No. 2 SIMILAR BY ROTATION)

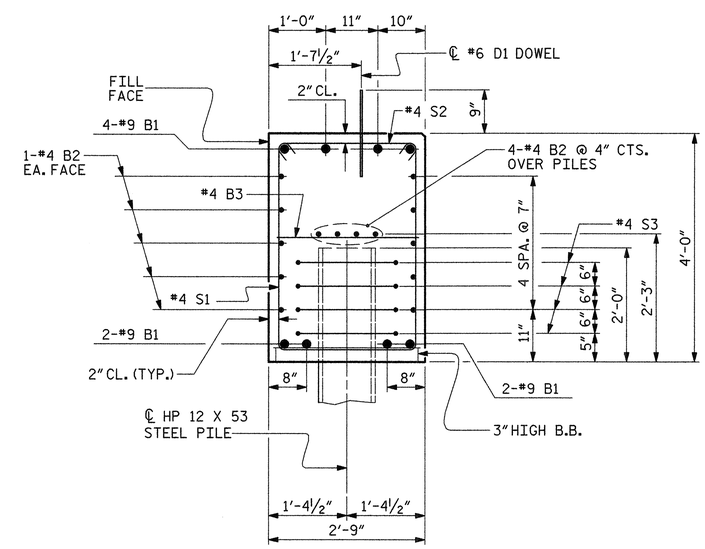


## SECTION A-A

(CONCRETE COLLAR NOT SHOWN FOR CLARITY. SEE "CORROSION PROTECTION FOR STEEL PILES DETAIL.")

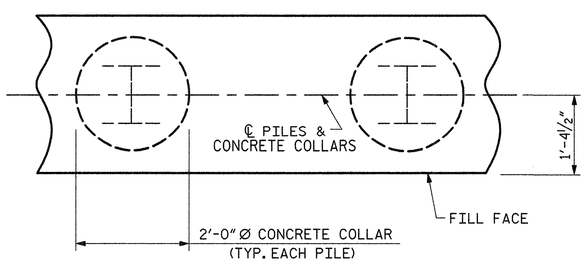


PLAN

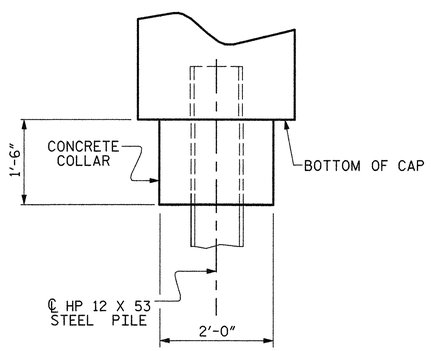


ELEVATION

## CORROSION PROTECTION FOR STEEL PILES DETAIL

(END BENT No. 1 SHOWN, END BENT No. 2 SIMILAR BY ROTATION)

PROJECT NO. 17BP.4.R.11

EDGECOMBE COUNTY

STATION: 12+29.10 -L-

SHEET 4 OF 4

STATE OF NORTH CAROLINA
DEPARTMENT OF TRANSPORTATION
RALEIGH

SUBSTRUCTURE

END BENT No. 1 & 2 DETAILS

THIS STANDARD DRAWING REVIEWED & ADOPTED FOR USE AT THE REFERENCED LOCATION BY THE UNDERSIGNED:

NORTH CAROLINA PROFESSIONAL ENGINEER SEAL 19661 L. KEVIN AUSTIN 12/14/12

PLANS PREPARED BY:
MULKEY ENGINEERS & CONSULTANTS
PO BOX 33127
RALEIGH, N.C. 27636
(919) 851-1912
(919) 851-1918 (FAX)
WWW.MULKEYINC.COM
NC LICENSE NO. C-1021

| REVISIONS | | | | | | | SHEET NO. |
|---|---|---|---|---|---|---|---|
| NO. | BY: | DATE: | NO. | BY: | DATE: | | 16 |
| 1 | | | 3 | | | | TOTAL SHEETS |
| 2 | | | 4 | | | | 24 |

STD. NO. EB_30_90S4

| | | | |
|---|---|---|---|
| ASSEMBLED BY : | W. B. ALLEN | DATE : | 10/12 |
| CHECKED BY : | W.A. DAVIS | DATE : | 10/12 |
| DRAWN BY : | WJH 12/11 | | |
| CHECKED BY : | AAC 12/11 | | |

12/19/2012 11:05:46 AM R:\Structures\Edgecombe 57_SD_EB2_02.dgn

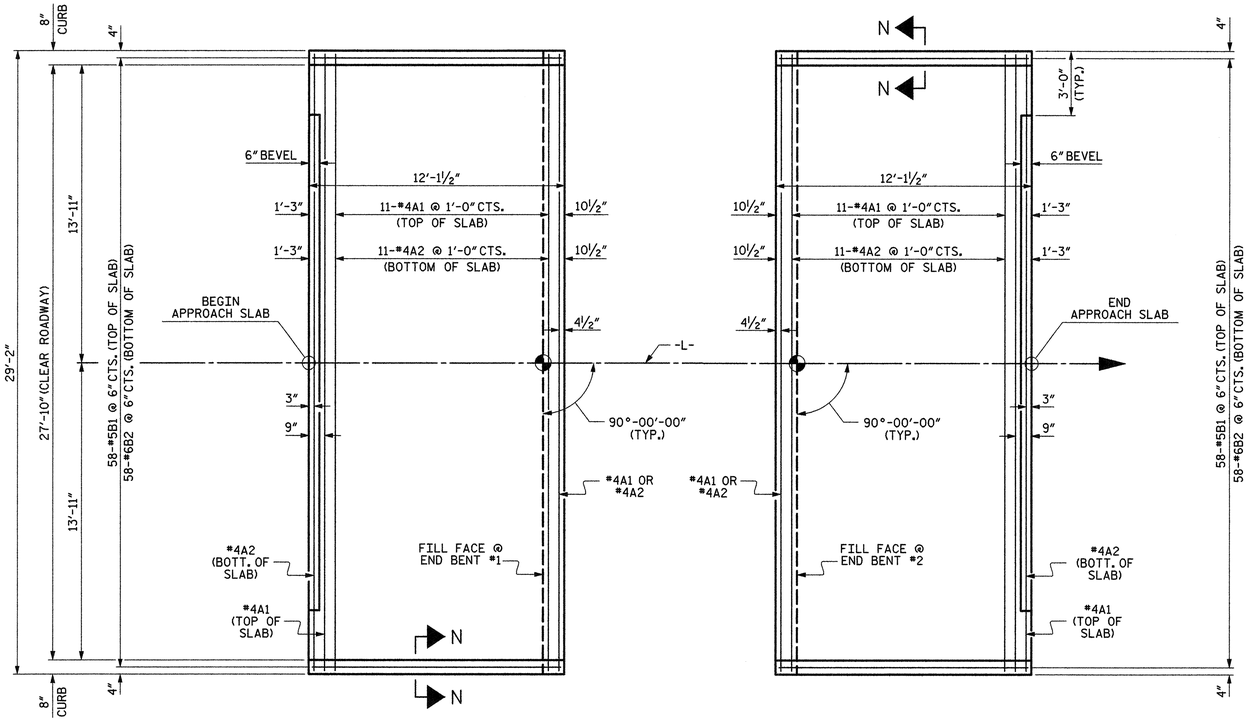


PLAN @ END BENT #1

PLAN @ END BENT #2

DIMENSIONS SHOWN ARE TYPICAL FOR BOTH APPROACH SLABS

## NOTES

FOR REINFORCED BRIDGE APPROACH FILL INCLUDING GEOTEXTILE, IMPERMEABLE GEOMEMBRANE, 4" Ø DRAINAGE PIPE, #78M STONE, AND SELECT MATERIAL, SEE ROADWAY PLANS.

AREA BETWEEN THE WINGWALL AND APPROACH SLAB SHALL BE GRADED TO DRAIN THE WATER AWAY FROM THE FILL FACE OF THE BRIDGE AND SHALL BE PAVED. SEE ROADWAY PLANS.

APPROACH SLAB GROOVING IS NOT REQUIRED.

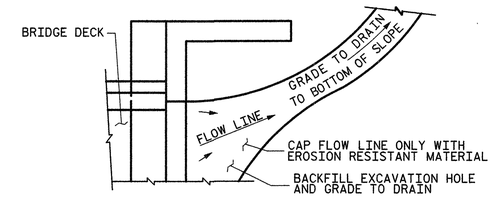


NOTE: IF THE APPROACH SLAB IS NOT CONSTRUCTED IMMEDIATELY AFTER THE BACKFILLING OF THE END BENT EXCAVATION, GRADE TO DRAIN TO THE BOTTOM OF THE SLOPE AND PROVIDE EROSION RESISTANT MATERIAL, SUCH AS FIBERGLASS ROVING OR AS DIRECTED BY THE ENGINEER TO PREVENT SOIL EROSION AND TO PROTECT THE AREA ADJACENT TO THE STRUCTURE. THE CONTRACTOR WILL BE REQUIRED TO REMOVE THESE MATERIALS PRIOR TO CONSTRUCTION OF THE APPROACH SLAB.

TEMPORARY DRAINAGE DETAIL

## BILL OF MATERIAL

### APPROACH SLAB AT EB #1

| BAR | NO. | SIZE | TYPE | LENGTH | WEIGHT |
|---|---|---|---|---|---|
| * A1 | 13 | #4 | STR | 28'-10" | 250 |
| A2 | 13 | #4 | STR | 28'-10" | 250 |
| * B1 | 58 | #5 | STR | 11'-2" | 676 |
| B2 | 58 | #6 | STR | 11'-8" | 1016 |
| REINFORCING STEEL | | | | LBS. | 1266 |
| * EPOXY COATED REINFORCING STEEL | | | | LBS. | 926 |
| CLASS AA CONCRETE | | | | C. Y. | 16.9 |

### APPROACH SLAB AT EB #2

| BAR | NO. | SIZE | TYPE | LENGTH | WEIGHT |
|---|---|---|---|---|---|
| * A1 | 13 | #4 | STR | 28'-10" | 250 |
| A2 | 13 | #4 | STR | 28'-10" | 250 |
| * B1 | 58 | #5 | STR | 11'-2" | 676 |
| B2 | 58 | #6 | STR | 11'-8" | 1016 |
| REINFORCING STEEL | | | | LBS. | 1266 |
| * EPOXY COATED REINFORCING STEEL | | | | LBS. | 926 |
| CLASS AA CONCRETE | | | | C. Y. | 16.9 |

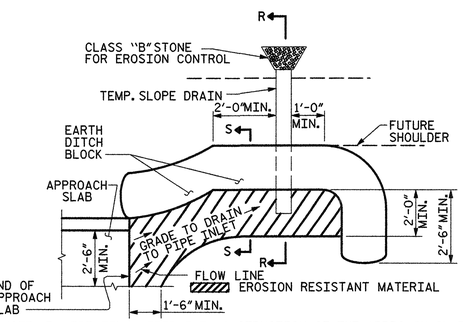


NOTE: IMMEDIATELY AFTER THE CONSTRUCTION OF THE APPROACH SLAB, THE CONTRACTOR SHALL PROVIDE TEMPORARY BERM AND SLOPE DRAIN. CONTRACTOR SHALL GRADE TO PIPE INLET AND PROVIDE EROSION RESISTANT MATERIAL AS SHOWN. THE EROSION RESISTANT MATERIAL SHALL BE EITHER 1) ASPHALT PLANT MIX, TYPE 1 OR TYPE 2, MIN. 2" DEPTH, 2) EROSION CONTROL MAT, OR 3) CONCRETE, AS DIRECTED BY THE ENGINEER. THE SLOPE DRAIN SHALL CONSIST OF A NON-PERFORATED TEMPORARY DRAINAGE PIPE, 12 INCHES IN DIAMETER.

PLAN VIEW

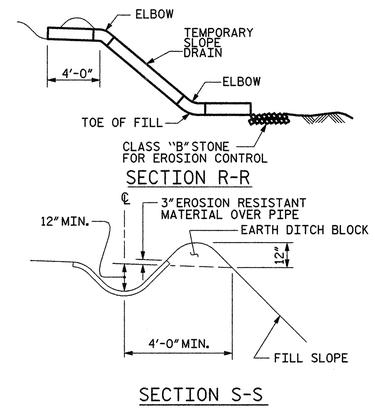


TEMPORARY BERM AND SLOPE DRAIN DETAILS

(TO BE USED WHEN SHOULDER BERM GUTTER IS REQUIRED)

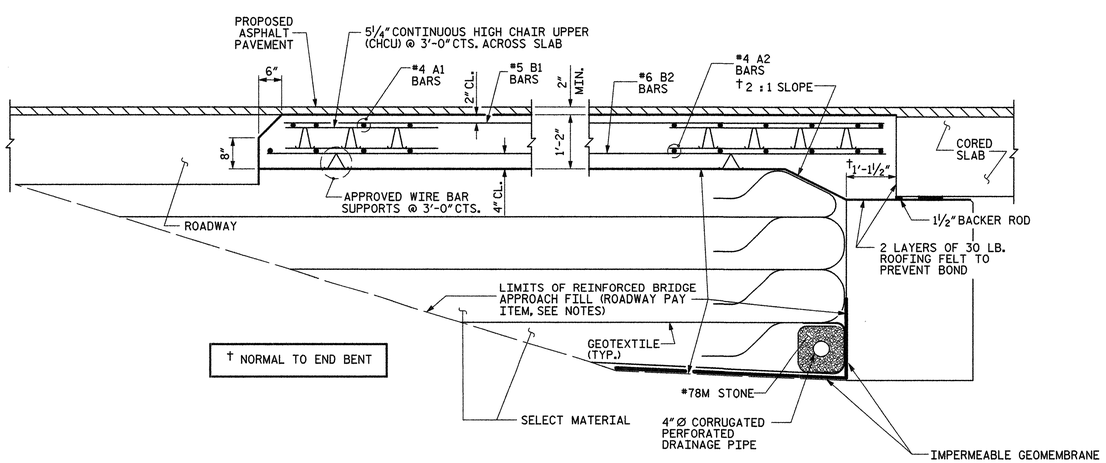


SECTION THRU SLAB

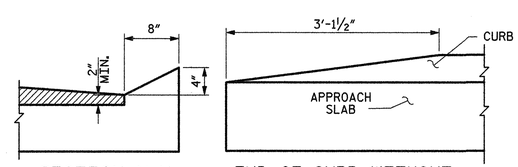


SECTION N-N

END OF CURB WITHOUT SHOULDER BERM GUTTER

CURB DETAILS

PROJECT NO. 17BP.4.R.11

EDGECOMBE COUNTY

STATION: 12+29.10 -L-

| SPLICE LENGTHS | | |
|---|---|---|
| BAR SIZE | EPOXY COATED | UNCOATED |
| #4 | 2'-0" | 1'-9" |
| #5 | 2'-6" | 2'-2" |
| #6 | 3'-10" | 2'-7" |

PLANS PREPARED BY:

MULKEY ENGINEERS & CONSULTANTS
PO Box 33127
Raleigh, N.C. 27636
(919) 851-1912
(919) 851-1918 (FAX)
WWW.MULKEYINC.COM
NC LICENSE NO. C-1051

THIS STANDARD DRAWING REVIEWED & ADOPTED FOR USE AT THE REFERENCED LOCATION BY THE UNDERSIGNED:

NORTH CAROLINA PROFESSIONAL ENGINEER SEAL 19661 KEVIN AUSTIN
12/14/12

STATE OF NORTH CAROLINA
DEPARTMENT OF TRANSPORTATION
RALEIGH

STANDARD
BRIDGE APPROACH SLAB
FOR PRESTRESSED CONCRETE
CORED SLAB UNIT
(SUB-REGIONAL TIER)
90° SKEW

| REVISIONS | | | | | | SHEET NO. |
|---|---|---|---|---|---|---|
| NO. | BY: | DATE: | NO. | BY: | DATE: | 17 |
| 1 | | | 3 | | | TOTAL SHEETS |
| 2 | | | 4 | | | 24 |

| | | | |
|---|---|---|---|
| ASSEMBLED BY : | W. B. ALLEN | DATE : | 10/12 |
| CHECKED BY : | W.A. DAVIS | DATE : | 10/12 |
| DRAWN BY : SHS/MAA 5-09 | REV. 12-11 | MAA/AAC | |
| CHECKED BY : BCH 5-09 | | | |

12/19/2012 11:19:37 AM R:\Structures\Edgecombe 57_SD_AS_01.dgn

STD. NO. BAS_30_90S

# STANDARD NOTES

## DESIGN DATA:

| | |
|---|---|
| SPECIFICATIONS | A.A.S.H.T.O. (CURRENT) |
| LIVE LOAD | SEE PLANS |
| IMPACT ALLOWANCE | SEE A.A.S.H.T.O. |
| STRESS IN EXTREME FIBER OF | |
| STRUCTURAL STEEL - AASHTO M270 GRADE 36 | 20,000 LBS. PER SQ. IN. |
| - AASHTO M270 GRADE 50W | 27,000 LBS. PER SQ. IN. |
| - AASHTO M270 GRADE 50 | 27,000 LBS. PER SQ. IN. |
| REINFORCING STEEL IN TENSION | |
| GRADE 60 | 24,000 LBS. PER SQ. IN. |
| CONCRETE IN COMPRESSION | 1,200 LBS. PER SQ. IN. |
| CONCRETE IN SHEAR | SEE A.A.S.H.T.O. |
| STRUCTURAL TIMBER - TREATED OR | |
| UNTREATED - EXTREME FIBER STRESS | 1,800 LBS. PER SQ. IN. |
| COMPRESSION PERPENDICULAR TO GRAIN OF TIMBER | 375 LBS. PER SQ. IN. |
| EQUIVALENT FLUID PRESSURE OF EARTH | 30 LBS. PER CU. FT. (MINIMUM) |

## MATERIAL AND WORKMANSHIP:

EXCEPT AS MAY OTHERWISE BE SPECIFIED ON PLANS OR IN THE SPECIAL PROVISIONS, ALL MATERIAL AND WORKMANSHIP SHALL BE IN ACCORDANCE WITH THE 2012 "STANDARD SPECIFICATIONS FOR ROADS AND STRUCTURES" OF THE N. C. DEPARTMENT OF TRANSPORTATION.

STEEL SHEET PILING FOR PERMANENT OR TEMPORARY APPLICATIONS SHALL BE HOT ROLLED.

## CONCRETE:

UNLESS OTHERWISE REQUIRED ON PLANS, CLASS A CONCRETE SHALL BE USED FOR ALL PORTIONS OF ALL STRUCTURES WITH THE EXCEPTION THAT: CLASS AA CONCRETE SHALL BE USED IN BRIDGE SUPERSTRUCTURES, ABUTMENT BACKWALLS, AND APPROACH SLABS; AND CLASS B CONCRETE SHALL BE USED FOR SLOPE PROTECTION AND RIP RAP.

## CONCRETE CHAMFERS:

UNLESS OTHERWISE NOTED ON THE PLANS, ALL EXPOSED CORNERS ON STRUCTURES SHALL BE CHAMFERED 3/4" WITH THE FOLLOWING EXCEPTIONS: TOP CORNERS OF CURBS MAY BE ROUNDED TO 1-1/2" RADIUS WHICH IS BUILT INTO CURB FORMS; CORNERS OF TRANSVERSE FLOOR EXPANSION JOINTS SHALL BE ROUNDED WITH A 1/4" FINISHING TOOL UNLESS OTHERWISE REQUIRED ON PLANS; AND CORNERS OF EXPANSION JOINTS IN THE ROADWAY FACES AND TOPS OF CURBS AND SIDEWALKS SHALL BE ROUNDED TO A 1/4" RADIUS WITH A FINISHING STONE OR TOOL UNLESS OTHERWISE REQUIRED ON PLANS.

## DOWELS:

DOWELS WHEN INDICATED ON PLANS AS FOR CULVERT EXTENSIONS, SHALL BE EMBEDDED AT LEAST 12" INTO THE OLD CONCRETE AND GROUTED INTO PLACE WITH 1:2 CEMENT MORTAR.

## ALLOWANCE FOR DEAD LOAD DEFLECTION, SETTLEMENT, ETC. IN CASTING SUPERSTRUCTURES:

BRIDGES SHALL BE BUILT ON THE GRADE OR VERTICAL CURVE SHOWN ON PLANS. SLABS, CURBS AND PARAPETS SHALL CONFORM TO THE GRADE OR CURVE.

ALL DIMENSIONS WHICH ARE GIVEN IN SECTION AND ARE AFFECTED BY DEAD LOAD DEFLECTIONS ARE DIMENSIONS AT CENTER LINE OF BEARING UNLESS OTHERWISE NOTED ON PLANS. IN SETTING FORMS FOR STEEL BEAM BRIDGES AND PRESTRESSED CONCRETE GIRDER BRIDGES, ADJUSTMENTS SHALL BE MADE DUE TO THE DEAD LOAD DEFLECTIONS FOR THE ELEVATIONS SHOWN. WHERE BLOCKS ARE SHOWN OVER BEAMS FOR BUILDING UP TO THE SLAB, THE VERTICAL DIMENSIONS OF THE BLOCKS SHALL BE ADJUSTED BETWEEN BEARINGS TO COMPENSATE FOR DEAD LOAD DEFLECTIONS, VERTICAL CURVE ORDINATE, AND ACTUAL BEAM CAMBER. WHERE BOTTOM OF SLAB IS IN LINE WITH BOTTOM OF TOP FLANGES, DEPTH OF SLAB BETWEEN BEARINGS SHALL BE ADJUSTED TO COMPENSATE FOR DEAD LOAD DEFLECTION, VERTICAL CURVE ORDINATE, AND ACTUAL BEAM CAMBER.

IN SETTING FALSEWORK AND FORMS FOR REINFORCED CONCRETE SPANS, AN ALLOWANCE SHALL BE MADE FOR DEAD LOAD DEFLECTIONS, SETTLEMENT OF FALSEWORK, AND PERMANENT CAMBER WHICH SHALL BE PROVIDED FOR IN ADDITION TO THE ELEVATIONS SHOWN. AFTER REMOVAL OF THE FALSEWORK, THE FINISHED STRUCTURES SHALL CONFORM TO THE PROFILE AND ELEVATIONS SHOWN ON THE PLANS AND CONSTRUCTION ELEVATIONS FURNISHED BY THE ENGINEER.

DETAILED DRAWINGS FOR FALSEWORK OR FORMS FOR BRIDGE SUPERSTRUCTURE AND ANY STRUCTURE OR PARTS OF A STRUCTURE AS NOTED ON THE PLANS SHALL BE SUBMITTED TO THE ENGINEER FOR APPROVAL BEFORE CONSTRUCTION OF THE FALSEWORK OR FORMS IS STARTED.

## REINFORCING STEEL:

ALL REINFORCING STEEL SHALL BE DEFORMED. DIMENSIONS RELATIVE TO PLACEMENT OF REINFORCING ARE TO CENTERS OF BARS UNLESS OTHERWISE INDICATED IN THE PLANS. DIMENSIONS ON BAR DETAILS ARE TO CENTERS OF BARS OR ARE OUT TO OUT AS INDICATED ON PLANS.

WIRE BAR SUPPORTS SHALL BE PROVIDED FOR REINFORCING STEEL WHERE INDICATED ON THE PLANS. WHEN BAR SUPPORT PIECES ARE PLACED IN CONTINUOUS LINES, THEY SHALL BE SO PLACED THAT THE ENDS OF THE SUPPORTING WIRES SHALL BE LAPPED TO LOCK LEGS ON ADJOINING PIECES.

## STRUCTURAL STEEL:

AT THE CONTRACTOR'S OPTION, HE MAY SUBSTITUTE 7/8" Ø SHEAR STUDS FOR THE 3/4" Ø STUDS SPECIFIED ON THE PLANS. THIS SUBSTITUTION SHALL BE MADE AT THE RATE OF 3 - 7/8" Ø STUDS FOR 4 - 3/4" Ø STUDS, AND STUD SPACING CHANGES SHALL BE MADE AS NECESSARY TO PROVIDE THE SAME EQUIVALENT NUMBER OF 7/8" Ø STUDS ALONG THE BEAM AS SHOWN FOR 3/4" Ø STUDS BASED ON THE RATIO OF 3 - 7/8" Ø STUDS FOR 4 - 3/4" Ø STUDS. STUDS OF THE LENGTH SPECIFIED ON THE PLANS MUST BE PROVIDED. THE MAXIMUM SPACING SHALL BE 2'-0".

EXCEPT AT THE INTERIOR SUPPORTS OF CONTINUOUS BEAMS WHERE THE COVER PLATE IS IN CONTACT WITH BEARING PLATE, THE CONTRACTOR MAY, AT HIS OPTION, SUBSTITUTE FOR THE COVER PLATES DESIGNATED ON THE PLANS COVER PLATES OF THE EQUIVALENT AREA PROVIDED THESE PLATES ARE AT LEAST 5/16" IN THICKNESS AND DO NOT EXCEED A WIDTH EQUAL TO THE FLANGE WIDTH LESS 2" OR A THICKNESS EQUAL TO 2 TIMES THE FLANGE THICKNESS. THE SIZE OF FILLET WELDS SHALL CONFORM TO THE REQUIREMENTS OF THE CURRENT ANSI/AASHTO/AWS "BRIDGE WELDING CODE". ELECTROSLAG WELDING WILL NOT BE PERMITTED.

WITH THE SOLE EXCEPTION OF EDGES AT SURFACES WHICH BEAR ON OTHER SURFACES, ALL SHARP EDGES AND ENDS OF SHAPES AND PLATES SHALL BE SLIGHTLY ROUNDED BY SUITABLE MEANS TO A RADIUS OF APPROXIMATELY 1/16 INCH OR EQUIVALENT FLAT SURFACE AT A SUITABLE ANGLE PRIOR TO PAINTING, GALVANIZING, OR METALLIZING.

## HANDRAILS AND POSTS:

METAL STANDARDS AND FACES OF THE CONCRETE END POSTS FOR THE METAL RAIL SHALL BE SET NORMAL TO THE GRADE OF THE CURB, UNLESS OTHERWISE SHOWN ON PLANS. THE METAL RAIL AND TOPS OF CONCRETE POSTS USED WITH THE ALUMINUM RAIL SHALL BE BUILT PARALLEL TO THE GRADE OF THE CURB.

METAL HANDRAILS SHALL BE IN ACCORDANCE WITH THE PLANS. RAILS SHALL BE AS MANUFACTURED FOR BRIDGE RAILING. CASTINGS SHALL BE OF A UNIFORM APPEARANCE. FINS AND OTHER DEFORMATIONS RESULTING FROM CASTING OR OTHERWISE SHALL BE REMOVED IN A MANNER SO THAT A UNIFORM COLORING OF THE COMPLETED CASTING SHALL BE OBTAINED. CASTINGS WITH DISCOLORATIONS OR OF NON-UNIFORM COLORING WILL NOT BE ACCEPTED. CERTIFIED MILL REPORTS ARE REQUIRED FOR METAL RAILS AND POSTS.

## SPECIAL NOTES:

GENERALLY, IN CASE OF DISCREPANCY, THIS STANDARD SHEET OF NOTES SHALL GOVERN OVER THE SPECIFICATIONS, BUT THE REMAINDER OF THE PLANS SHALL GOVERN OVER NOTES HEREON, AND SPECIAL PROVISIONS SHALL GOVERN OVER ALL. SEE SPECIFICATIONS ARTICLE 105-4.

# EROSION CONTROL PLAN

ENVIRONMENTALLY SENSITIVE AREA
SEE PROJECT SPECIAL PROVISIONS

NOTE:
PLACE TEMPORARY ROCK SEDIMENT DAMS TYPE – B AND TEMPORARY ROCK SILT CHECKS TYPE – A AT DRAINAGE OUTLETS.

## CLEARING AND GRUBBING PHASE

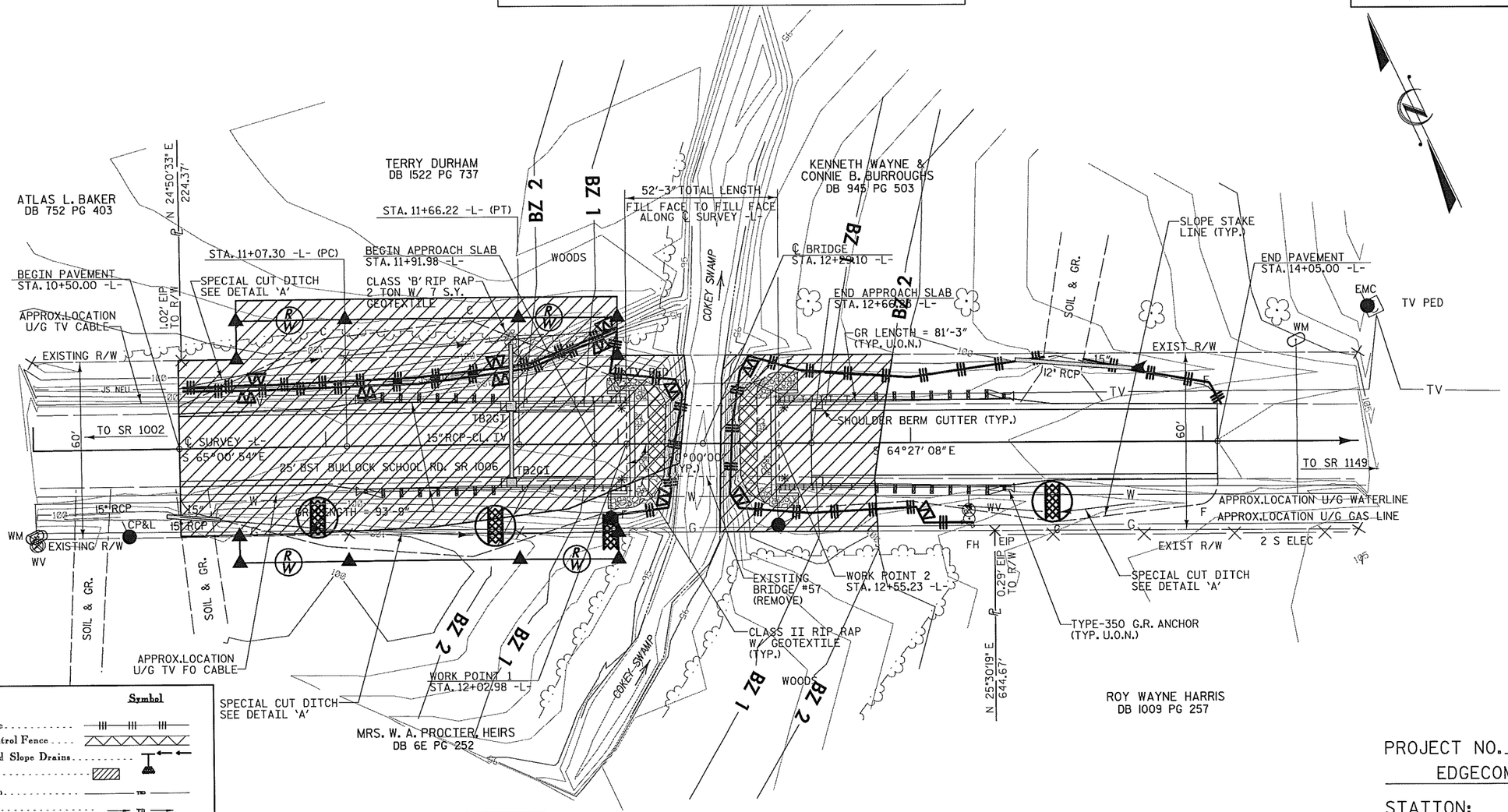


| Std. # | Description | Symbol |
|---|---|---|
| 1605.01 | Temporary Silt Fence | |
| 1606.01 | Special Sediment Control Fence | |
| 1622.01 | Temporary Berms and Slope Drains | |
| 1630.02 | Silt Basin Type B | |
| 1630.03 | Temporary Silt Ditch | TSD |
| 1630.05 | Temporary Diversion | TD |
| 1630.06 | Special Stilling Basin | |
| 1632.03 | Rock Inlet Sediment Trap Type C | |
| 1633.01 | Temporary Rock Silt Check Type-A | |
| | Temporary Rock Silt Check Type-A with Matting and Polyacrylamide (PAM) | |
| 1633.02 | Temporary Rock Silt Check Type-B | |
| | Wattle | |
| | Coir Fiber Wattle Barrier | CFW |
| | Wattle with Polyacrylamide (PAM) | |
| 1634.02 | Temporary Rock Sediment Dam Type-B | |
| 1635.01 | Rock Pipe Inlet Sediment Trap Type-A | |

***THESE EROSION AND SEDIMENT CONTROL PLANS COMPLY WITH THE REGULATIONS SET FORTH BY THE NCG-010000 GENERAL CONSTRUCTION PERMIT EFFECTIVE AUGUST 3, 2011 ISSUED BY THE NORTH CAROLINA DEPARTMENT OF ENVIRONMENT AND NATURAL RESOURCES DIVISION OF WATER QUALITY.***

## 2012 STANDARD DRAWINGS

| | | | |
|---|---|---|---|
| 1604.01 | Railroad Erosion Control Detail | 1632.01 | Rock Inlet Sediment Trap Type A |
| 1605.01 | Temporary Silt Fence | 1632.02 | Rock Inlet Sediment Trap Type B |
| 1606.01 | Special Sediment Control Fence | 1632.03 | Rock Inlet Sediment Trap Type C |
| 1607.01 | Gravel Construction Entrance | 1633.01 | Temporary Rock Silt Check Type A |
| 1622.01 | Temporary Berms and Slope Drains | 1633.02 | Temporary Rock Silt Check Type B |
| 1630.01 | Riser Basin | 1634.01 | Temporary Rock Sediment Dam Type A |
| 1630.02 | Silt Basin Type B | 1634.02 | Temporary Rock Sediment Dam Type B |
| 1630.03 | Temporary Silt Ditch | 1635.01 | Rock Pipe Inlet Sediment Trap Type A |
| 1630.04 | Stilling Basin | 1635.02 | Rock Pipe Inlet Sediment Trap Type B |
| 1630.05 | Temporary Diversion | 1640.01 | Coir Fiber Baffle |
| 1630.06 | Special Stilling Basin | 1645.01 | Temporary Stream Crossing |
| 1631.01 | Matting Installation | | |

NOTES: ANY DEVIATION FROM OPTIONS GIVEN WILL REQUIRE PRIOR APPROVAL BY ENGINEER.

ADDITIONAL EROSION CONTROL DEVICES MAY NEED TO BE INSTALLED AS DIRECTED BY THE ENGINEER.

ROADSIDE ENVIRONMENTAL UNIT
DEPARTMENT OF TRANSPORTATION
DIVISION OF HIGHWAYS
RALEIGH, N.C.

2012 STANDARD SPECIFICATIONS

PROJECT NO. 17BP.4.R.11
EDGECOMBE COUNTY
STATION: 12+29.10 -L-

REPLACES BRIDGE NO. 57

DEPARTMENT OF TRANSPORTATION
RALEIGH

BRIDGE ON SR 1006
OVER COKEY SWAMP
BETWEEN SR 1002
& SR 1149

27'-10" CLEAR ROADWAY - 90° SKEW

| REVISIONS | | | | | | | |
|---|---|---|---|---|---|---|---|
| NO. | BY: | DATE: | NO. | BY: | DATE: | SHEET NO. | EC-1 |
| 1 | | | 3 | | | TOTAL SHEETS | 24 |
| 2 | | | 4 | | | | |

3/10/2013 12:30:13 PM R:\Structures\Erosion Control\Edgecombe 57_EC_PSH_01.dgn

# EROSION CONTROL PLAN

FINAL PHASE

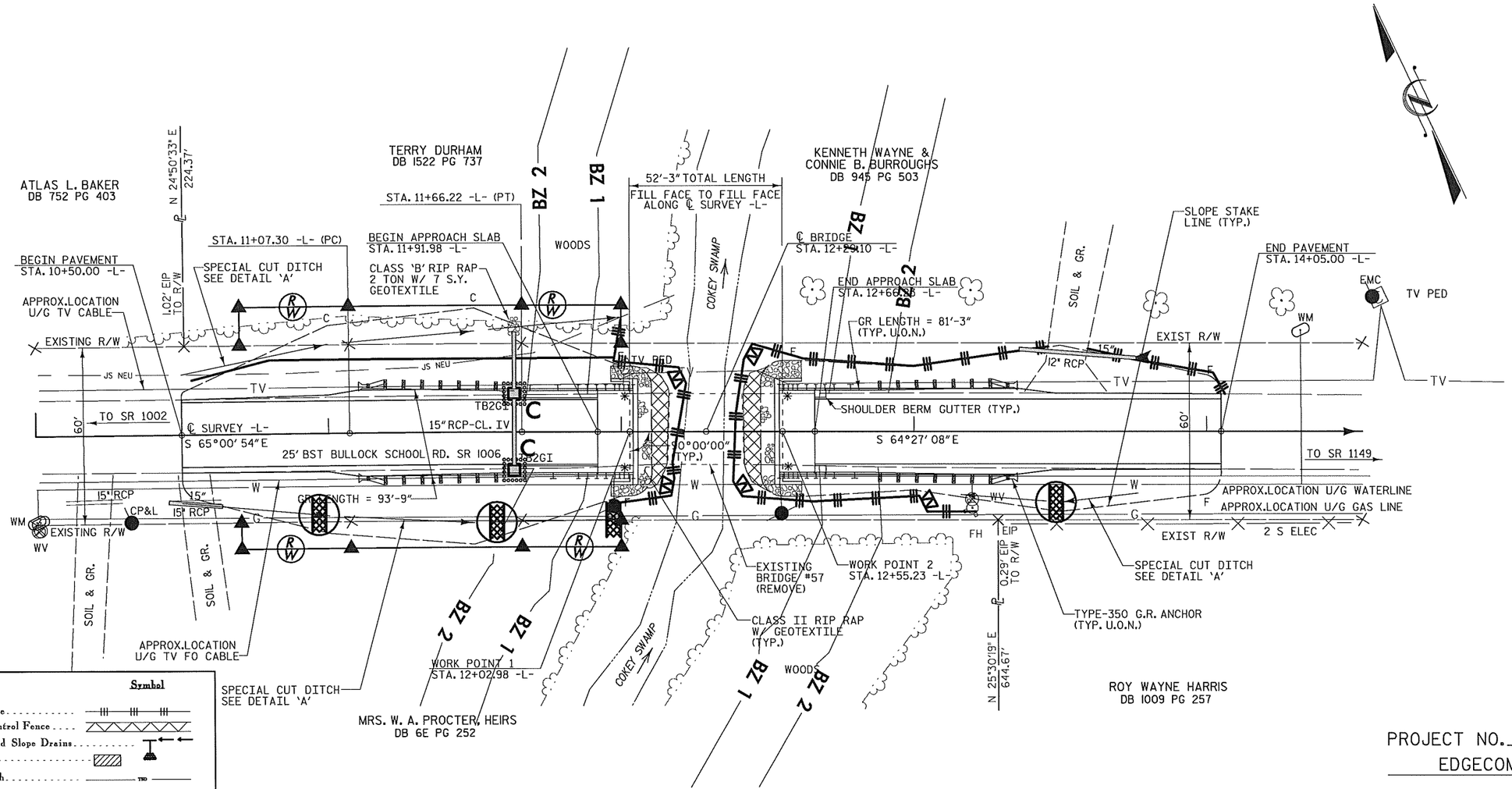


| Std. # | Description | Symbol |
|---|---|---|
| 1605.01 | Temporary Silt Fence | |
| 1606.01 | Special Sediment Control Fence | |
| 1622.01 | Temporary Berms and Slope Drains | |
| 1630.02 | Silt Basin Type B | |
| 1630.03 | Temporary Silt Ditch | TSD |
| 1630.05 | Temporary Diversion | TD |
| 1630.06 | Special Stilling Basin | |
| 1632.03 | Rock Inlet Sediment Trap Type C | |
| 1633.01 | Temporary Rock Silt Check Type-A | |
| | Temporary Rock Silt Check Type-A with Matting and Polyacrylamide (PAM) | |
| 1633.02 | Temporary Rock Silt Check Type-B | |
| | Wattle | |
| | Coir Fiber Wattle Barrier | CFW |
| | Wattle with Polyacrylamide (PAM) | |
| 1634.02 | Temporary Rock Sediment Dam Type-B | |
| 1635.01 | Rock Pipe Inlet Sediment Trap Type-A | |

***THESE EROSION AND SEDIMENT CONTROL PLANS COMPLY WITH THE REGULATIONS SET FORTH BY THE NCG-010000 GENERAL CONSTRUCTION PERMIT EFFECTIVE AUGUST 3, 2011 ISSUED BY THE NORTH CAROLINA DEPARTMENT OF ENVIRONMENT AND NATURAL RESOURCES DIVISION OF WATER QUALITY.***

## 2012 STANDARD DRAWINGS

| | | | |
|---|---|---|---|
| 1604.01 | Railroad Erosion Control Detail | 1632.01 | Rock Inlet Sediment Trap Type A |
| 1605.01 | Temporary Silt Fence | 1632.02 | Rock Inlet Sediment Trap Type B |
| 1606.01 | Special Sediment Control Fence | 1632.03 | Rock Inlet Sediment Trap Type C |
| 1607.01 | Gravel Construction Entrance | 1633.01 | Temporary Rock Silt Check Type A |
| 1622.01 | Temporary Berms and Slope Drains | 1633.02 | Temporary Rock Silt Check Type B |
| 1630.01 | Riser Basin | 1634.01 | Temporary Rock Sediment Dam Type A |
| 1630.02 | Silt Basin Type B | 1634.02 | Temporary Rock Sediment Dam Type B |
| 1630.03 | Temporary Silt Ditch | 1635.01 | Rock Pipe Inlet Sediment Trap Type A |
| 1630.04 | Stilling Basin | 1635.02 | Rock Pipe Inlet Sediment Trap Type B |
| 1630.05 | Temporary Diversion | 1640.01 | Coir Fiber Baffle |
| 1630.06 | Special Stilling Basin | 1645.01 | Temporary Stream Crossing |
| 1631.01 | Matting Installation | | |

**NOTES:** ANY DEVIATION FROM OPTIONS GIVEN WILL REQUIRE PRIOR APPROVAL BY ENGINEER.

ADDITIONAL EROSION CONTROL DEVICES MAY NEED TO BE INSTALLED AS DIRECTED BY THE ENGINEER.

ROADSIDE ENVIRONMENTAL UNIT
DEPARTMENT OF TRANSPORTATION
DIVISION OF HIGHWAYS
RALEIGH, N.C.

2012 STANDARD SPECIFICATIONS

PROJECT NO. 17BP.4.R.11
EDGECOMBE COUNTY
STATION: 12+29.10 -L-

REPLACES BRIDGE NO. 57

DEPARTMENT OF TRANSPORTATION
RALEIGH

BRIDGE ON SR 1006
OVER COKEY SWAMP
BETWEEN SR 1002
& SR 1149

27'-10" CLEAR ROADWAY - 90° SKEW

| REVISIONS | | | | | | | | SHEET NO. |
|---|---|---|---|---|---|---|---|---|
| NO. | BY: | DATE: | NO. | BY: | DATE: | | | EC-2 |
| 1 | | | 3 | | | | | TOTAL SHEETS |
| 2 | | | 4 | | | | | 24 |

3/10/2013 12:30:35 PM R:\Structures\Erosion Control\Edgecombe 57_EC_PSH_02.dgn

| PROJECT REFERENCE NO. | SHEET NO. |
|---|---|
| 17BP.4.R.11 | EC-3 |
| R/W SHEET NO. | |
| ROADWAY DESIGN ENGINEER | HYDRAULICS ENGINEER |

# TEMPORARY ROCK SILT CHECK TYPE 'A' WITH EXCELSIOR MATTING AND POLYACRYLAMIDE (PAM)

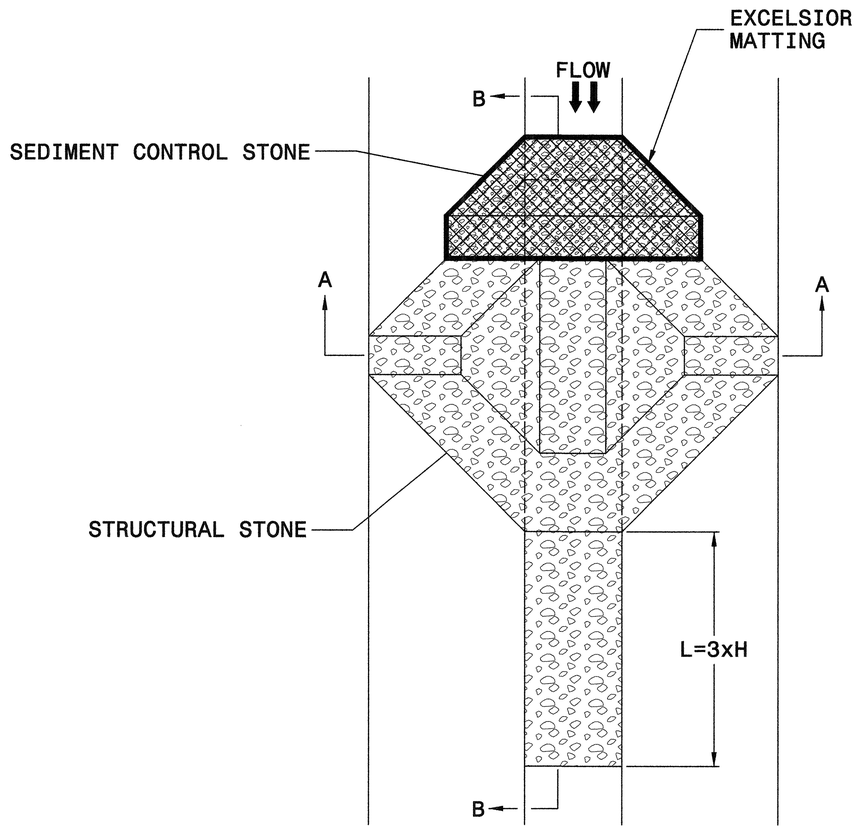


PLAN

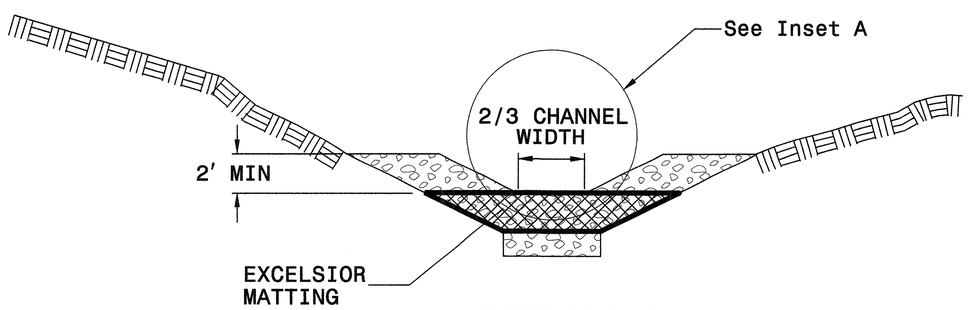


SECTION A-A

NOTES

USE EXCELSIOR FOR MATTING MATERIAL AND ANCHOR MATTING SECTION AT TOP AND BOTTOM WITH CLASS B STONE.

PRIOR TO POLYACRYLAMIDE (PAM) APPLICATION, OBTAIN A SOIL SAMPLE FROM PROJECT LOCATION, AND FROM OFFSITE MATERIAL, AND ANALYZE FOR APPROPRIATE PAM FLOCCULANT TO BE APPLIED TO EACH ROCK SILT CHECK.

INITIALLY APPLY 3.5 OUNCES OF POLYACRYLAMIDE (PAM) TO TOP OF MATTING SECTION AND AFTER EVERY RAINFALL EVENT THAT EQUALS OR EXCEEDS 0.50 INCHES.

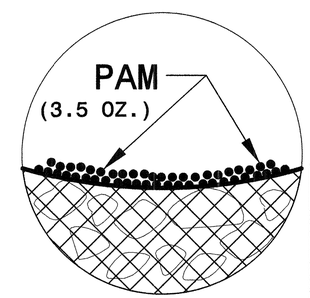


INSET A

NOTES: ANY DEVIATION FROM OPTIONS GIVEN WILL REQUIRE PRIOR APPROVAL BY ENGINEER.

ADDITIONAL EROSION CONTROL DEVICES MAY NEED TO BE INSTALLED AS DIRECTED BY THE ENGINEER.

ROADSIDE ENVIRONMENTAL UNIT
DEPARTMENT OF TRANSPORTATION
DIVISION OF HIGHWAYS
RALEIGH, N.C.

2012 STANDARD SPECIFICATIONS

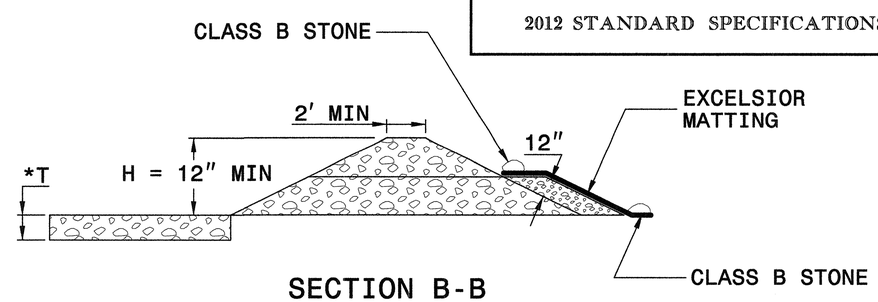


SECTION B-B

*T = 12" MIN., 18" MAX.

NOT TO SCALE

12/19/2012 11:07:44 AM R:\Structures\Erosion Control\Edgecombe 57_EC_PSH_03.dgn

| PROJECT REFERENCE NO. | SHEET NO. |
|---|---|
| 17BP.4.R.11 | EC-4 |
| R/W SHEET NO. | |
| ROADWAY DESIGN ENGINEER | HYDRAULICS ENGINEER |

# COIR FIBER WATTLE BARRIER DETAIL

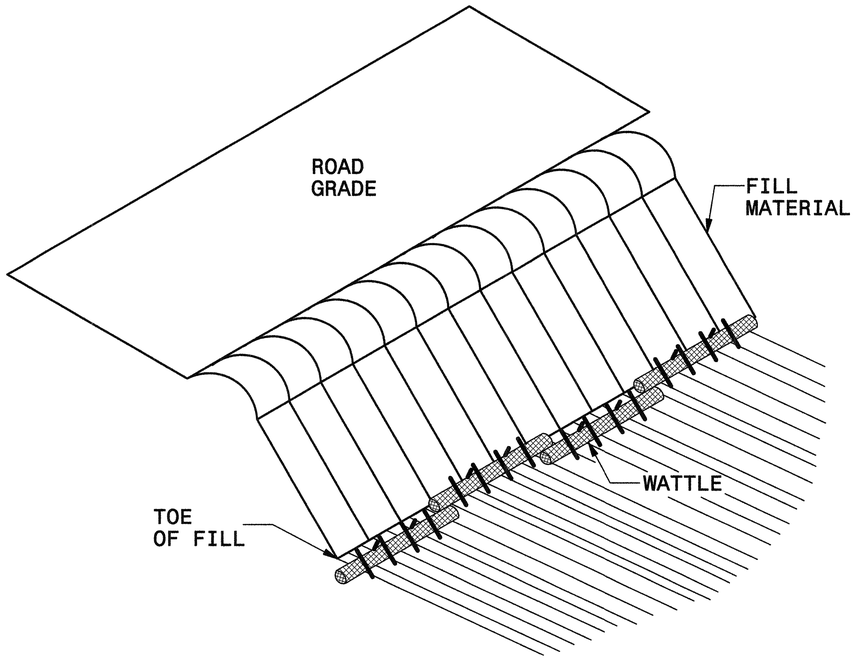


**ISOMETRIC VIEW**

NOTES:

USE MINIMUM 12 IN. DIAMETER COIR FIBER (COCONUT) WATTLE AND LENGTH OF 10 FT.

EXCAVATE A 1 TO 2 INCH TRENCH FOR WATTLE TO BE PLACED.

DO NOT PLACE WATTLES ON TOE OF SLOPE.

USE 2 FT. WOODEN STAKES WITH A 2 IN. BY 2 IN. NOMINAL CROSS SECTION.

INSTALL A MINIMUM OF 2 UPSLOPE STAKES AND 4 DOWNSLOPE STAKES AT AN ANGLE TO WEDGE WATTLE TO GROUND.

PROVIDE STAPLES MADE OF 0.125 IN. DIAMETER STEEL WIRE FORMED INTO A U SHAPE NOT LESS THAN 12″ IN LENGTH.

INSTALL STAPLES APPROXIMATELY EVERY 1 LINEAR FOOT ON BOTH SIDES OF WATTLE AND AT EACH END TO SECURE IT TO THE SOIL.

FOR BREAKS ALONG LARGE SLOPES, USE MAXIMUM SPACING OF 20 FT.

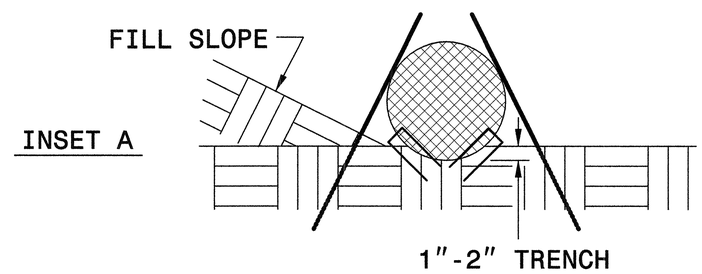


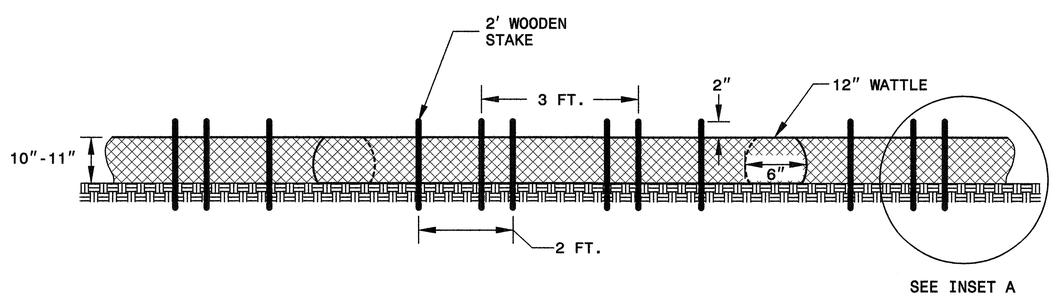


**FRONT VIEW**

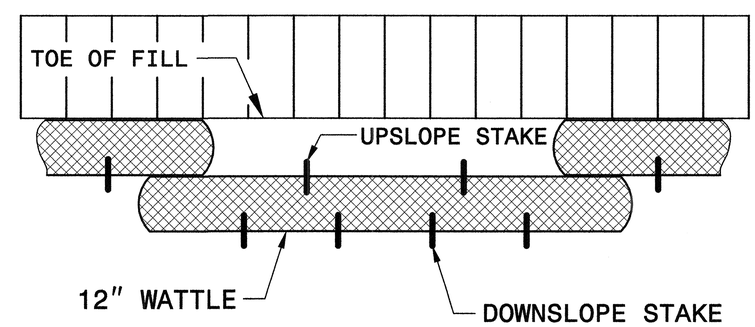


**TOP VIEW**

ROADSIDE ENVIRONMENTAL UNIT
DEPARTMENT OF TRANSPORTATION
DIVISION OF HIGHWAYS
RALEIGH, N.C.

2012 STANDARD SPECIFICATIONS

NOTES: ANY DEVIATION FROM OPTIONS GIVEN WILL REQUIRE PRIOR APPROVAL BY ENGINEER.

ADDITIONAL EROSION CONTROL DEVICES MAY NEED TO BE INSTALLED AS DIRECTED BY THE ENGINEER.

12/19/2012 11:09:20 AM R:\Structures\Erosion Control\Edgecombe 57_EC_PSH_04.dgn

| PROJECT REFERENCE NO. | SHEET NO. |
|---|---|
| 17BP.4.R.11 | EC-5 |
| ROADWAY DESIGN ENGINEER | HYDRAULICS ENGINEER |

DIVISION OF HIGHWAYS
STATE OF NORTH CAROLINA

# SOIL STABILIZATION TIMEFRAMES

| SITE DESCRIPTION | STABILIZATION TIME | TIMEFRAME EXCEPTIONS |
|---|---|---|
| PERIMETER DIKES, SWALES, DITCHES AND SLOPES | 7 DAYS | NONE |
| HIGH QUALITY WATER (HQW) ZONES | 7 DAYS | NONE |
| SLOPES STEEPER THAN 3:1 | 7 DAYS | IF SLOPES ARE 10' OR LESS IN LENGTH AND ARE NOT STEEPER THAN 2:1, 14 DAYS ARE ALLOWED. |
| SLOPES 3:1 OR FLATTER | 14 DAYS | 7 DAYS FOR SLOPES GREATER THAN 50' IN LENGTH. |
| ALL OTHER AREAS WITH SLOPES FLATTER THAN 4:1 | 14 DAYS | NONE, EXCEPT FOR PERIMETERS AND HQW ZONES. |

NOTES: ANY DEVIATION FROM OPTIONS GIVEN WILL REQUIRE PRIOR APPROVAL BY ENGINEER.

ADDITIONAL EROSION CONTROL DEVICES MAY NEED TO BE INSTALLED AS DIRECTED BY THE ENGINEER.

ROADSIDE ENVIRONMENTAL UNIT
DEPARTMENT OF TRANSPORTATION
DIVISION OF HIGHWAYS
RALEIGH, N.C.

2012 STANDARD SPECIFICATIONS

12/19/2012 11:08:39 AM R:\Structures\Erosion Control\Edgecombe 57_EC_PSH_05.dgn

| PROJECT REFERENCE NO. | SHEET NO. |
|---|---|
| 17BP.4.R.11 | EC-6 |
| R/W SHEET NO. | |
| ROADWAY DESIGN ENGINEER | HYDRAULICS ENGINEER |

# PLANTING DETAILS

## SEEDLING / LINER BAREROOT PLANTING DETAIL

### HEALING IN

1. Locate a healing-in site in a shady, well protected area.
2. Excavate a flat bottom trench 12 inches deep and provide drainage.

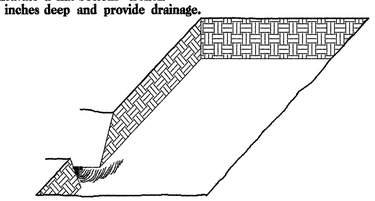

3. Backfill the trench with 2 inches well rotted sawdust. Place a 2 inch layer of well rotted sawdust at a sloping angle at one end of the trench.

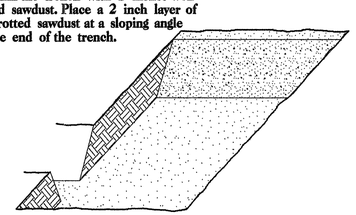

4. Place a single layer of plants against the sloping end so that the root collar is at ground level.

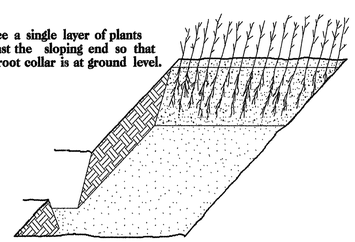

5. Place a 2 inch layer of well rotted sawdust over the roots maintaining a sloping angle.

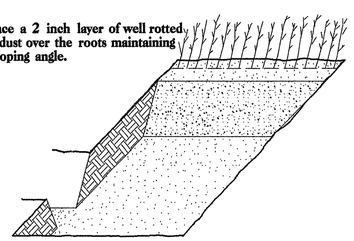

6. Repeat layers of plants and sawdust as necessary and water thoroughly.

### DIBBLE PLANTING METHOD
USING THE KBC PLANTING BAR

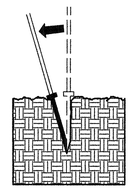

1. Insert planting bar as shown and pull handle toward planter.

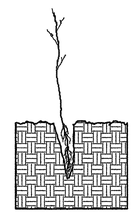

2. Remove planting bar and place seedling at correct depth.

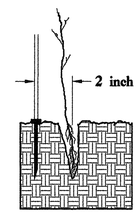


3. Insert planting bar 2 inches toward planter from seedling.

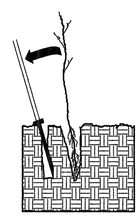

4. Pull handle of bar toward planter, firming soil at bottom.

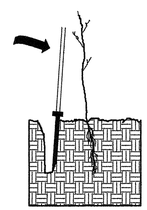

5. Push handle forward firming soil at top.

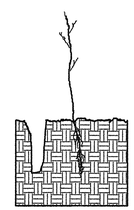

6. Leave compaction hole open. Water thoroughly.

### PLANTING NOTES:

PLANTING BAG
During planting, seedlings shall be kept in a moist canvas bag or similar container to prevent the root systems from drying.

KBC PLANTING BAR
Planting bar shall have a blade with a triangular cross section, and shall be 12 inches long, 4 inches wide and 1 inch thick at center.

ROOT PRUNING
All seedlings shall be root pruned, if necessary, so that no roots extend more than 10 inches below the root collar.

# REFORESTATION

☐ TREE REFORESTATION SHALL BE PLANTED 6 FT. TO 10 FT. ON CENTER, RANDOM SPACING, AVERAGING 8 FT. ON CENTER, APPROXIMATELY 680 PLANTS PER ACRE.

**REFORESTATION**

MIXTURE, TYPE, SIZE, AND FURNISH SHALL CONFORM TO THE FOLLOWING:

| | | | |
|---|---|---|---|
| 30% | PLATANUS OCCIDENTALIS | AMERICAN SYCAMORE | 12 in - 18 in BR |
| 30% | LIRIODENDRON TULIPIFERA | YELLOW POPLAR | 12 in - 18 in BR |
| 40% | FRAXINUS PENNSYLVANICA | GREEN ASH | 12 in - 18 in BR |

NOTES: ANY DEVIATION FROM OPTIONS GIVEN WILL REQUIRE PRIOR APPROVAL BY ENGINEER.

ADDITIONAL EROSION CONTROL DEVICES MAY NEED TO BE INSTALLED AS DIRECTED BY THE ENGINEER.

ROADSIDE ENVIRONMENTAL UNIT
DEPARTMENT OF TRANSPORTATION
DIVISION OF HIGHWAYS
RALEIGH, N.C.

2012 STANDARD SPECIFICATIONS

# REFORESTATION DETAIL SHEET

N.C.D.O.T. - ROADSIDE ENVIRONMENTAL UNIT

12/19/2012 11:08:59 AM R:\Structures\Erosion Control\Edgecombe 57_EC_PSH_06.dgn

| STATE | STATE PROJECT REFERENCE NO. | SHEET NO. | TOTAL SHEETS |
|---|---|---|---|
| N.C. | SF-320057 | 1 | 5 |

# STATE OF NORTH CAROLINA
## DEPARTMENT OF TRANSPORTATION
## DIVISION OF HIGHWAYS
## GEOTECHNICAL ENGINEERING UNIT

PROJECT: 17BP.4.R.11 ID: SF-320057

### CONTENTS


| SHEET | DESCRIPTION |
|---|---|
| 1 | TITLE SHEET |
| 2 | LEGEND |
| 3 | SITE PLAN |
| 4 | PROFILE |
| 5 | BORE LOGS |


# STRUCTURE SUBSURFACE INVESTIGATION

PROJ. REFERENCE NO. 17BP.4.R.11 (SF-320057) F.A. PROJ. _____

COUNTY EDGECOMBE

PROJECT DESCRIPTION BRIDGE NO. 57 ON SR 1006 (BULLUCK SCHOOL RD.) OVER COKEY SWAMP AT -L- STA. 12+29.10

### CAUTION NOTICE

THE SUBSURFACE INFORMATION AND THE SUBSURFACE INVESTIGATION ON WHICH IT IS BASED WERE MADE FOR THE PURPOSE OF STUDY, PLANNING AND DESIGN, AND NOT FOR CONSTRUCTION OR PAY PURPOSES. THE VARIOUS FIELD BORING LOGS, ROCK CORES, AND SOIL TEST DATA AVAILABLE MAY BE REVIEWED OR INSPECTED IN RALEIGH BY CONTACTING THE N.C. DEPARTMENT OF TRANSPORTATION, GEOTECHNICAL ENGINEERING UNIT AT (919) 707-6850. NEITHER THE SUBSURFACE PLANS AND REPORTS, NOR THE FIELD BORING LOGS, ROCK CORES, OR SOIL TEST DATA ARE PART OF THE CONTRACT.

GENERAL SOIL AND ROCK STRATA DESCRIPTIONS AND INDICATED BOUNDARIES ARE BASED ON A GEOTECHNICAL INTERPRETATION OF ALL AVAILABLE SUBSURFACE DATA AND MAY NOT NECESSARILY REFLECT THE ACTUAL SUBSURFACE CONDITIONS BETWEEN BORINGS OR BETWEEN SAMPLED STRATA WITHIN THE BOREHOLE. THE LABORATORY SAMPLE DATA AND THE IN SITU (IN-PLACE) TEST DATA CAN BE RELIED ON ONLY TO THE DEGREE OF RELIABILITY INHERENT IN THE STANDARD TEST METHOD. THE OBSERVED WATER LEVELS OR SOIL MOISTURE CONDITIONS INDICATED IN THE SUBSURFACE INVESTIGATIONS ARE AS RECORDED AT THE TIME OF THE INVESTIGATION. THESE WATER LEVELS OR SOIL MOISTURE CONDITIONS MAY VARY CONSIDERABLY WITH TIME ACCORDING TO CLIMATIC CONDITIONS INCLUDING TEMPERATURES, PRECIPITATION AND WIND, AS WELL AS OTHER NON-CLIMATIC FACTORS.

THE BIDDER OR CONTRACTOR IS CAUTIONED THAT DETAILS SHOWN ON THE SUBSURFACE PLANS ARE PRELIMINARY ONLY AND IN MANY CASES THE FINAL DESIGN DETAILS ARE DIFFERENT. FOR BIDDING AND CONSTRUCTION PURPOSES, REFER TO THE CONSTRUCTION PLANS AND DOCUMENTS FOR FINAL DESIGN INFORMATION ON THIS PROJECT. THE DEPARTMENT DOES NOT WARRANT OR GUARANTEE THE SUFFICIENCY OR ACCURACY OF THE INVESTIGATION MADE, NOR THE INTERPRETATIONS MADE OR OPINION OF THE DEPARTMENT AS TO THE TYPE OF MATERIALS AND CONDITIONS TO BE ENCOUNTERED. THE BIDDER OR CONTRACTOR IS CAUTIONED TO MAKE SUCH INDEPENDENT SUBSURFACE INVESTIGATIONS AS HE DEEMS NECESSARY TO SATISFY HIMSELF AS TO CONDITIONS TO BE ENCOUNTERED ON THIS PROJECT. THE CONTRACTOR SHALL HAVE NO CLAIM FOR ADDITIONAL COMPENSATION OR FOR AN EXTENSION OF TIME FOR ANY REASON RESULTING FROM THE ACTUAL CONDITIONS ENCOUNTERED AT THE SITE DIFFERING FROM THOSE INDICATED IN THE SUBSURFACE INFORMATION.

PERSONNEL

C.M. WRIKE

R.E. SMITH

D.G. PINTER

INVESTIGATED BY T.C. BOTTOMS

CHECKED BY D.N. ARGENBRIGHT

SUBMITTED BY D.N. ARGENBRIGHT

DATE SEPTEMBER 2012

NORTH CAROLINA LICENSED SEAL 2240 GEOLOGIST TYLER C. BOTTOMS

9/27/12

DRAWN BY: C.P. TURNER

NOTE - THE INFORMATION CONTAINED HEREIN IS NOT IMPLIED OR GUARANTEED BY THE N.C. DEPARTMENT OF TRANSPORTATION AS BEING ACCURATE NOR IT IS CONSIDERED TO BE PART OF THE PLANS, SPECIFICATIONS, OR CONTRACT FOR THE PROJECT.

NOTE - BY HAVING REQUESTED THIS INFORMATION THE CONTRACTOR SPECIFICALLY WAIVES ANY CLAIMS FOR INCREASED COMPENSATION OR EXTENSION OF TIME BASED ON DIFFERENCES BETWEEN THE CONDITIONS INDICATED HEREIN AND THE ACTUAL CONDITIONS AT THE PROJECT SITE.

NORTH CAROLINA DEPARTMENT OF TRANSPORTATION

DIVISION OF HIGHWAYS

GEOTECHNICAL ENGINEERING UNIT

# SUBSURFACE INVESTIGATION

## SOIL AND ROCK LEGEND, TERMS, SYMBOLS, AND ABBREVIATIONS

### SOIL DESCRIPTION

SOIL IS CONSIDERED TO BE THE UNCONSOLIDATED, SEMI-CONSOLIDATED, OR WEATHERED EARTH MATERIALS THAT CAN BE PENETRATED WITH A CONTINUOUS FLIGHT POWER AUGER AND YIELD LESS THAN 100 BLOWS PER FOOT ACCORDING TO STANDARD PENETRATION TEST (AASHTO T206, ASTM D-1586). SOIL CLASSIFICATION IS BASED ON THE AASHTO SYSTEM. BASIC DESCRIPTIONS GENERALLY SHALL INCLUDE: CONSISTENCY, COLOR, TEXTURE, MOISTURE, AASHTO CLASSIFICATION, AND OTHER PERTINENT FACTORS SUCH AS MINERALOGICAL COMPOSITION, ANGULARITY, STRUCTURE, PLASTICITY, ETC. EXAMPLE:

*VERY STIFF, GRAY, SILTY CLAY, MOIST WITH INTERBEDDED FINE SAND LAYERS, HIGHLY PLASTIC, A-7-6*

### SOIL LEGEND AND AASHTO CLASSIFICATION

| GENERAL CLASS. | GRANULAR MATERIALS (≤ 35% PASSING #200) | | | | | | | SILT-CLAY MATERIALS (> 35% PASSING #200) | | | | ORGANIC MATERIALS | | |
|---|---|---|---|---|---|---|---|---|---|---|---|---|---|---|
| GROUP CLASS. | A-1 | | A-3 | A-2 | | | | A-4 | A-5 | A-6 | A-7 | A-1, A-2, A-3 | A-4, A-5, A-6, A-7 | |
| | A-1-a | A-1-b | | A-2-4 | A-2-5 | A-2-6 | A-2-7 | | | | A-7-5 A-7-6 | | | |
| SYMBOL | | | | | | | | | | | | | | |
| % PASSING #10 | 50 MX | | | | | | | | | | | GRANULAR SOILS | SILT-CLAY SOILS | MUCK, PEAT |
| #40 | 30 MX | 50 MX | 51 MN | | | | | | | | | | | |
| #200 | 15 MX | 25 MX | 10 MX | 35 MX | 35 MX | 35 MX | 35 MX | 36 MN | 36 MN | 36 MN | 36 MN | | | |
| LIQUID LIMIT | 6 MX | | NP | 40 MX | 41 MN | 40 MX | 41 MN | 40 MX | 41 MN | 40 MX | 41 MN | SOILS WITH LITTLE OR MODERATE AMOUNTS OF ORGANIC MATTER | | HIGHLY ORGANIC SOILS |
| PLASTIC INDEX | | | | 10 MX | 10 MX | 11 MN | 11 MN | 10 MX | 10 MX | 11 MN | 11 MN | | | |
| GROUP INDEX | 0 | | 0 | 0 | | 4 MX | | 8 MX | 12 MX | 16 MX | No MX | | | |
| USUAL TYPES OF MAJOR MATERIALS | STONE FRAGS., GRAVEL, AND SAND | | FINE SAND | SILTY OR CLAYEY GRAVEL AND SAND | | | | SILTY SOILS | | CLAYEY SOILS | | | | |
| GEN. RATING AS A SUBGRADE | EXCELLENT TO GOOD | | | | | | | FAIR TO POOR | | | | FAIR TO POOR | POOR | UNSUITABLE |

PI OF A-7-5 SUBGROUP IS ≤ LL - 30 ; PI OF A-7-6 SUBGROUP IS > LL - 30

### CONSISTENCY OR DENSENESS

| PRIMARY SOIL TYPE | COMPACTNESS OR CONSISTENCY | RANGE OF STANDARD PENETRATION RESISTENCE (N-VALUE) | RANGE OF UNCONFINED COMPRESSIVE STRENGTH (TONS/FT²) |
|---|---|---|---|
| GENERALLY GRANULAR MATERIAL (NON-COHESIVE) | VERY LOOSE<br>LOOSE<br>MEDIUM DENSE<br>DENSE<br>VERY DENSE | <4<br>4 TO 10<br>10 TO 30<br>30 TO 50<br>>50 | N/A |
| GENERALLY SILT-CLAY MATERIAL (COHESIVE) | VERY SOFT<br>SOFT<br>MEDIUM STIFF<br>STIFF<br>VERY STIFF<br>HARD | <2<br>2 TO 4<br>4 TO 8<br>8 TO 15<br>15 TO 30<br>>30 | <0.25<br>0.25 TO 0.50<br>0.5 TO 1.0<br>1 TO 2<br>2 TO 4<br>>4 |

### TEXTURE OR GRAIN SIZE

| U.S. STD. SIEVE SIZE | 4 | 10 | 40 | 60 | 200 | 270 |
|---|---|---|---|---|---|---|
| OPENING (MM) | 4.76 | 2.00 | 0.42 | 0.25 | 0.075 | 0.053 |

| BOULDER (BLDR.) | COBBLE (COB.) | GRAVEL (GR.) | COARSE SAND (CSE. SD.) | FINE SAND (F SD.) | SILT (SL.) | CLAY (CL.) |
|---|---|---|---|---|---|---|

| GRAIN SIZE | MM | 305 | 75 | 2.0 | 0.25 | 0.05 | 0.005 |
|---|---|---|---|---|---|---|---|
| | IN. | 12 | 3 | | | | |

### SOIL MOISTURE - CORRELATION OF TERMS

| SOIL MOISTURE SCALE (ATTERBERG LIMITS) | FIELD MOISTURE DESCRIPTION | GUIDE FOR FIELD MOISTURE DESCRIPTION |
|---|---|---|
| LL — LIQUID LIMIT | - SATURATED - (SAT.) | USUALLY LIQUID; VERY WET, USUALLY FROM BELOW THE GROUND WATER TABLE |
| PLASTIC RANGE (PI); PL — PLASTIC LIMIT | - WET - (W) | SEMISOLID; REQUIRES DRYING TO ATTAIN OPTIMUM MOISTURE |
| OM — OPTIMUM MOISTURE; SL — SHRINKAGE LIMIT | - MOIST - (M) | SOLID; AT OR NEAR OPTIMUM MOISTURE |
| | - DRY - (D) | REQUIRES ADDITIONAL WATER TO ATTAIN OPTIMUM MOISTURE |

### PLASTICITY

| | PLASTICITY INDEX (PI) | DRY STRENGTH |
|---|---|---|
| NONPLASTIC | 0-5 | VERY LOW |
| LOW PLASTICITY | 6-15 | SLIGHT |
| MED. PLASTICITY | 16-25 | MEDIUM |
| HIGH PLASTICITY | 26 OR MORE | HIGH |

### COLOR

DESCRIPTIONS MAY INCLUDE COLOR OR COLOR COMBINATIONS (TAN, RED, YELLOW-BROWN, BLUE-GRAY). MODIFIERS SUCH AS LIGHT, DARK, STREAKED, ETC. ARE USED TO DESCRIBE APPEARANCE.

### GRADATION

WELL GRADED - INDICATES A GOOD REPRESENTATION OF PARTICLE SIZES FROM FINE TO COARSE.
UNIFORM - INDICATES THAT SOIL PARTICLES ARE ALL APPROXIMATELY THE SAME SIZE. (ALSO POORLY GRADED)
GAP-GRADED - INDICATES A MIXTURE OF UNIFORM PARTICLES OF TWO OR MORE SIZES.

### ANGULARITY OF GRAINS

THE ANGULARITY OR ROUNDNESS OF SOIL GRAINS IS DESIGNATED BY THE TERMS: ANGULAR, SUBANGULAR, SUBROUNDED, OR ROUNDED.

### MINERALOGICAL COMPOSITION

MINERAL NAMES SUCH AS QUARTZ, FELDSPAR, MICA, TALC, KAOLIN, ETC. ARE USED IN DESCRIPTIONS WHENEVER THEY ARE CONSIDERED OF SIGNIFICANCE.

### COMPRESSIBILITY

| | |
|---|---|
| SLIGHTLY COMPRESSIBLE | LIQUID LIMIT LESS THAN 31 |
| MODERATELY COMPRESSIBLE | LIQUID LIMIT EQUAL TO 31-50 |
| HIGHLY COMPRESSIBLE | LIQUID LIMIT GREATER THAN 50 |

### PERCENTAGE OF MATERIAL

| ORGANIC MATERIAL | GRANULAR SOILS | SILT - CLAY SOILS | OTHER MATERIAL | |
|---|---|---|---|---|
| TRACE OF ORGANIC MATTER | 2 - 3% | 3 - 5% | TRACE | 1 - 10% |
| LITTLE ORGANIC MATTER | 3 - 5% | 5 - 12% | LITTLE | 10 - 20% |
| MODERATELY ORGANIC | 5 - 10% | 12 - 20% | SOME | 20 - 35% |
| HIGHLY ORGANIC | >10% | >20% | HIGHLY | 35% AND ABOVE |

### GROUND WATER

- ▽ WATER LEVEL IN BORE HOLE IMMEDIATELY AFTER DRILLING
- ▼ STATIC WATER LEVEL AFTER 24 HOURS
- ▽PW PERCHED WATER, SATURATED ZONE, OR WATER BEARING STRATA
- SPRING OR SEEP

### MISCELLANEOUS SYMBOLS

- ROADWAY EMBANKMENT (RE) WITH SOIL DESCRIPTION
- SOIL SYMBOL
- ARTIFICIAL FILL (AF) OTHER THAN ROADWAY EMBANKMENT
- INFERRED SOIL BOUNDARY
- INFERRED ROCK LINE
- ALLUVIAL SOIL BOUNDARY
- 25/025 DIP & DIP DIRECTION OF ROCK STRUCTURES
- SPT DMT VST PMT TEST BORING
- AUGER BORING
- CORE BORING
- MW MONITORING WELL
- PIEZOMETER INSTALLATION
- SLOPE INDICATOR INSTALLATION
- CONE PENETROMETER TEST
- SOUNDING ROD
- TEST BORING W/ CORE
- SPT N-VALUE
- REF SPT REFUSAL

### ABBREVIATIONS

| | | |
|---|---|---|
| AR - AUGER REFUSAL | MED. - MEDIUM | VST - VANE SHEAR TEST |
| BT - BORING TERMINATED | MICA. - MICACEOUS | WEA. - WEATHERED |
| CL. - CLAY | MOD. - MODERATELY | γ - UNIT WEIGHT |
| CPT - CONE PENETRATION TEST | NP - NON PLASTIC | $\gamma_d$ - DRY UNIT WEIGHT |
| CSE. - COARSE | ORG. - ORGANIC | |
| DMT - DILATOMETER TEST | PMT - PRESSUREMETER TEST | SAMPLE ABBREVIATIONS |
| DPT - DYNAMIC PENETRATION TEST | SAP. - SAPROLITIC | S - BULK |
| e - VOID RATIO | SD. - SAND, SANDY | SS - SPLIT SPOON |
| F - FINE | SL. - SILT, SILTY | ST - SHELBY TUBE |
| FOSS. - FOSSILIFEROUS | SLI. - SLIGHTLY | RS - ROCK |
| FRAC. - FRACTURED, FRACTURES | TCR - TRICONE REFUSAL | RT - RECOMPACTED TRIAXIAL |
| FRAGS. - FRAGMENTS | w - MOISTURE CONTENT | CBR - CALIFORNIA BEARING RATIO |
| HI. - HIGHLY | V - VERY | |

### EQUIPMENT USED ON SUBJECT PROJECT

DRILL UNITS:
- [ ] MOBILE B-___
- [ ] BK-51
- [ ] CME-45C
- [X] CME-550
- [ ] PORTABLE HOIST
- [ ] _____
- [ ] _____

ADVANCING TOOLS:
- [ ] CLAY BITS
- [ ] 6" CONTINUOUS FLIGHT AUGER
- [ ] 8" HOLLOW AUGERS
- [ ] HARD FACED FINGER BITS
- [ ] TUNG.-CARBIDE INSERTS
- [X] CASING [ ] W/ ADVANCER
- [X] TRICONE 2 15/16" STEEL TEETH
- [ ] TRICONE _____" TUNG.-CARB.
- [ ] CORE BIT
- [ ] _____

HAMMER TYPE:
- [X] AUTOMATIC [ ] MANUAL

CORE SIZE:
- [ ] -B_____
- [ ] -N_____
- [ ] -H_____

HAND TOOLS:
- [ ] POST HOLE DIGGER
- [ ] HAND AUGER
- [ ] SOUNDING ROD
- [ ] VANE SHEAR TEST
- [ ] _____

### ROCK DESCRIPTION

HARD ROCK IS NON-COASTAL PLAIN MATERIAL THAT IF TESTED, WOULD YIELD SPT REFUSAL. AN INFERRED ROCK LINE INDICATES THE LEVEL AT WHICH NON-COASTAL PLAIN MATERIAL WOULD YIELD SPT REFUSAL. SPT REFUSAL IS PENETRATION BY A SPLIT SPOON SAMPLER EQUAL TO OR LESS THAN 0.1 FOOT PER 60 BLOWS. IN NON-COASTAL PLAIN MATERIAL, THE TRANSITION BETWEEN SOIL AND ROCK IS OFTEN REPRESENTED BY A ZONE OF WEATHERED ROCK.
ROCK MATERIALS ARE TYPICALLY DIVIDED AS FOLLOWS:

| | |
|---|---|
| WEATHERED ROCK (WR) | NON-COASTAL PLAIN MATERIAL THAT WOULD YIELD SPT N VALUES > 100 BLOWS PER FOOT IF TESTED. |
| CRYSTALLINE ROCK (CR) | FINE TO COARSE GRAIN IGNEOUS AND METAMORPHIC ROCK THAT WOULD YIELD SPT REFUSAL IF TESTED. ROCK TYPE INCLUDES GRANITE, GNEISS, GABBRO, SCHIST, ETC. |
| NON-CRYSTALLINE ROCK (NCR) | FINE TO COARSE GRAIN METAMORPHIC AND NON-COASTAL PLAIN SEDIMENTARY ROCK THAT WOULD YIELD SPT REFUSAL IF TESTED. ROCK TYPE INCLUDES PHYLLITE, SLATE, SANDSTONE, ETC. |
| COASTAL PLAIN SEDIMENTARY ROCK (CP) | COASTAL PLAIN SEDIMENTS CEMENTED INTO ROCK, BUT MAY NOT YIELD SPT REFUSAL. ROCK TYPE INCLUDES LIMESTONE, SANDSTONE, CEMENTED SHELL BEDS, ETC. |

### WEATHERING

| | |
|---|---|
| FRESH | ROCK FRESH, CRYSTALS BRIGHT, FEW JOINTS MAY SHOW SLIGHT STAINING. ROCK RINGS UNDER HAMMER IF CRYSTALLINE. |
| VERY SLIGHT (V SLI.) | ROCK GENERALLY FRESH, JOINTS STAINED, SOME JOINTS MAY SHOW THIN CLAY COATINGS IF OPEN, CRYSTALS ON A BROKEN SPECIMEN FACE SHINE BRIGHTLY. ROCK RINGS UNDER HAMMER BLOWS IF OF A CRYSTALLINE NATURE. |
| SLIGHT (SLI.) | ROCK GENERALLY FRESH, JOINTS STAINED AND DISCOLORATION EXTENDS INTO ROCK UP TO 1 INCH. OPEN JOINTS MAY CONTAIN CLAY. IN GRANITOID ROCKS SOME OCCASIONAL FELDSPAR CRYSTALS ARE DULL AND DISCOLORED. CRYSTALLINE ROCKS RING UNDER HAMMER BLOWS. |
| MODERATE (MOD.) | SIGNIFICANT PORTIONS OF ROCK SHOW DISCOLORATION AND WEATHERING EFFECTS. IN GRANITOID ROCKS, MOST FELDSPARS ARE DULL AND DISCOLORED, SOME SHOW CLAY. ROCK HAS DULL SOUND UNDER HAMMER BLOWS AND SHOWS SIGNIFICANT LOSS OF STRENGTH AS COMPARED WITH FRESH ROCK. |
| MODERATELY SEVERE (MOD. SEV.) | ALL ROCK EXCEPT QUARTZ DISCOLORED OR STAINED. IN GRANITOID ROCKS, ALL FELDSPARS DULL AND DISCOLORED AND A MAJORITY SHOW KAOLINIZATION. ROCK SHOWS SEVERE LOSS OF STRENGTH AND CAN BE EXCAVATED WITH A GEOLOGIST'S PICK. ROCK GIVES "CLUNK" SOUND WHEN STRUCK. *IF TESTED, WOULD YIELD SPT REFUSAL* |
| SEVERE (SEV.) | ALL ROCK EXCEPT QUARTZ DISCOLORED OR STAINED. ROCK FABRIC CLEAR AND EVIDENT BUT REDUCED IN STRENGTH TO STRONG SOIL. IN GRANITOID ROCKS ALL FELDSPARS ARE KAOLINIZED TO SOME EXTENT. SOME FRAGMENTS OF STRONG ROCK USUALLY REMAIN. *IF TESTED, YIELDS SPT N VALUES ≥ 100 BPF* |
| VERY SEVERE (V SEV.) | ALL ROCK EXCEPT QUARTZ DISCOLORED OR STAINED. ROCK FABRIC ELEMENTS ARE DISCERNIBLE BUT THE MASS IS EFFECTIVELY REDUCED TO SOIL STATUS, WITH ONLY FRAGMENTS OF STRONG ROCK REMAINING. SAPROLITE IS AN EXAMPLE OF ROCK WEATHERED TO A DEGREE SUCH THAT ONLY MINOR VESTIGES OF THE ORIGINAL ROCK FABRIC REMAIN. *IF TESTED, YIELDS SPT N VALUES < 100 BPF* |
| COMPLETE | ROCK REDUCED TO SOIL. ROCK FABRIC NOT DISCERNIBLE, OR DISCERNIBLE ONLY IN SMALL AND SCATTERED CONCENTRATIONS. QUARTZ MAY BE PRESENT AS DIKES OR STRINGERS. SAPROLITE IS ALSO AN EXAMPLE. |

### ROCK HARDNESS

| | |
|---|---|
| VERY HARD | CANNOT BE SCRATCHED BY KNIFE OR SHARP PICK. BREAKING OF HAND SPECIMENS REQUIRES SEVERAL HARD BLOWS OF THE GEOLOGIST'S PICK. |
| HARD | CAN BE SCRATCHED BY KNIFE OR PICK ONLY WITH DIFFICULTY. HARD HAMMER BLOWS REQUIRED TO DETACH HAND SPECIMEN. |
| MODERATELY HARD | CAN BE SCRATCHED BY KNIFE OR PICK. GOUGES OR GROOVES TO 0.25 INCHES DEEP CAN BE EXCAVATED BY HARD BLOW OF A GEOLOGIST'S PICK. HAND SPECIMENS CAN BE DETACHED BY MODERATE BLOWS. |
| MEDIUM HARD | CAN BE GROOVED OR GOUGED 0.05 INCHES DEEP BY FIRM PRESSURE OF KNIFE OR PICK POINT. CAN BE EXCAVATED IN SMALL CHIPS TO PEICES 1 INCH MAXIMUM SIZE BY HARD BLOWS OF THE POINT OF A GEOLOGIST'S PICK. |
| SOFT | CAN BE GROVED OR GOUGED READILY BY KNIFE OR PICK. CAN BE EXCAVATED IN FRAGMENTS FROM CHIPS TO SEVERAL INCHES IN SIZE BY MODERATE BLOWS OF A PICK POINT. SMALL, THIN PIECES CAN BE BROKEN BY FINGER PRESSURE. |
| VERY SOFT | CAN BE CARVED WITH KNIFE. CAN BE EXCAVATED READILY WITH POINT OF PICK. PIECES 1 INCH OR MORE IN THICKNESS CAN BE BROKEN BY FINGER PRESSURE. CAN BE SCRATCHED READILY BY FINGERNAIL. |

### FRACTURE SPACING

| TERM | SPACING |
|---|---|
| VERY WIDE | MORE THAN 10 FEET |
| WIDE | 3 TO 10 FEET |
| MODERATELY CLOSE | 1 TO 3 FEET |
| CLOSE | 0.16 TO 1 FEET |
| VERY CLOSE | LESS THAN 0.16 FEET |

### BEDDING

| TERM | THICKNESS |
|---|---|
| VERY THICKLY BEDDED | > 4 FEET |
| THICKLY BEDDED | 1.5 - 4 FEET |
| THINLY BEDDED | 0.16 - 1.5 FEET |
| VERY THINLY BEDDED | 0.03 - 0.16 FEET |
| THICKLY LAMINATED | 0.008 - 0.03 FEET |
| THINLY LAMINATED | < 0.008 FEET |

### INDURATION

FOR SEDIMENTARY ROCKS, INDURATION IS THE HARDENING OF THE MATERIAL BY CEMENTING, HEAT, PRESSURE, ETC.

| | |
|---|---|
| FRIABLE | RUBBING WITH FINGER FREES NUMEROUS GRAINS; GENTLE BLOW BY HAMMER DISINTEGRATES SAMPLE. |
| MODERATELY INDURATED | GRAINS CAN BE SEPARATED FROM SAMPLE WITH STEEL PROBE; BREAKS EASILY WHEN HIT WITH HAMMER. |
| INDURATED | GRAINS ARE DIFFICULT TO SEPARATE WITH STEEL PROBE; DIFFICULT TO BREAK WITH HAMMER. |
| EXTREMELY INDURATED | SHARP HAMMER BLOWS REQUIRED TO BREAK SAMPLE; SAMPLE BREAKS ACROSS GRAINS. |

### TERMS AND DEFINITIONS

ALLUVIUM (ALLUV.) - SOILS THAT HAVE BEEN TRANSPORTED BY WATER.

AQUIFER - A WATER BEARING FORMATION OR STRATA.

ARENACEOUS - APPLIED TO ROCKS THAT HAVE BEEN DERIVED FROM SAND OR THAT CONTAIN SAND.

ARGILLACEOUS - APPLIED TO ALL ROCKS OR SUBSTANCES COMPOSED OF CLAY MINERALS, OR HAVING A NOTABLE PROPORTION OF CLAY IN THEIR COMPOSITION, AS SHALE, SLATE, ETC.

ARTESIAN - GROUND WATER THAT IS UNDER SUFFICIENT PRESSURE TO RISE ABOVE THE LEVEL AT WHICH IT IS ENCOUNTERED, BUT WHICH DOES NOT NECESSARILY RISE TO OR ABOVE THE GROUND SURFACE.

CALCAREOUS (CALC.) - SOILS THAT CONTAIN APPRECIABLE AMOUNTS OF CALCIUM CARBONATE.

COLLUVIUM - ROCK FRAGMENTS MIXED WITH SOIL DEPOSITED BY GRAVITY ON SLOPE OR AT BOTTOM OF SLOPE.

CORE RECOVERY (REC.) - TOTAL LENGTH OF ALL MATERIAL RECOVERED IN THE CORE BARREL DIVIDED BY TOTAL LENGTH OF CORE RUN AND EXPRESSED AS A PERCENTAGE.

DIKE - A TABULAR BODY OF IGNEOUS ROCK THAT CUTS ACROSS THE STRUCTURE OF ADJACENT ROCKS OR CUTS MASSIVE ROCK.

DIP - THE ANGLE AT WHICH A STRATUM OR ANY PLANAR FEATURE IS INCLINED FROM THE HORIZONTAL.

DIP DIRECTION (DIP AZIMUTH) - THE DIRECTION OR BEARING OF THE HORIZONTAL TRACE OF THE LINE OF DIP, MEASURED CLOCKWISE FROM NORTH.

FAULT - A FRACTURE OR FRACTURE ZONE ALONG WHICH THERE HAS BEEN DISPLACEMENT OF THE SIDES RELATIVE TO ONE ANOTHER PARALLEL TO THE FRACTURE.

FISSILE - A PROPERTY OF SPLITTING ALONG CLOSELY SPACED PARALLEL PLANES.

FLOAT - ROCK FRAGMENTS ON SURFACE NEAR THEIR ORIGINAL POSITION AND DISLODGED FROM PARENT MATERIAL.

FLOOD PLAIN (FP) - LAND BORDERING A STREAM, BUILT OF SEDIMENTS DEPOSITED BY THE STREAM.

FORMATION (FM.) - A MAPPABLE GEOLOGIC UNIT THAT CAN BE RECOGNIZED AND TRACED IN THE FIELD.

JOINT - FRACTURE IN ROCK ALONG WHICH NO APPRECIABLE MOVEMENT HAS OCCURRED.

LEDGE - A SHELF-LIKE RIDGE OR PROJECTION OF ROCK WHOSE THICKNESS IS SMALL COMPARED TO ITS LATERAL EXTENT.

LENS - A BODY OF SOIL OR ROCK THAT THINS OUT IN ONE OR MORE DIRECTIONS.

MOTTLED (MOT.) - IRREGULARLY MARKED WITH SPOTS OF DIFFERENT COLORS. MOTTLING IN SOILS USUALLY INDICATES POOR AERATION AND LACK OF GOOD DRAINAGE.

PERCHED WATER - WATER MAINTAINED ABOVE THE NORMAL GROUND WATER LEVEL BY THE PRESENCE OF AN INTERVENING IMPERVIOUS STRATUM.

RESIDUAL (RES.) SOIL - SOIL FORMED IN PLACE BY THE WEATHERING OF ROCK.

ROCK QUALITY DESIGNATION (RQD) - A MEASURE OF ROCK QUALITY DESCRIBED BY TOTAL LENGTH OF ROCK SEGMENTS EQUAL TO OR GREATER THAN 4 INCHES DIVIDED BY THE TOTAL LENGTH OF CORE RUN AND EXPRESSED AS A PERCENTAGE.

SAPROLITE (SAP.) - RESIDUAL SOIL THAT RETAINS THE RELIC STRUCTURE OR FABRIC OF THE PARENT ROCK.

SILL - AN INTRUSIVE BODY OF IGNEOUS ROCK OF APPROXIMATELY UNIFORM THICKNESS AND RELATIVELY THIN COMPARED WITH ITS LATERAL EXTENT, THAT HAS BEEN EMPLACED PARALLEL TO THE BEDDING OR SCHISTOSITY OF THE INTRUDED ROCKS.

SLICKENSIDE - POLISHED AND STRIATED SURFACE THAT RESULTS FROM FRICTION ALONG A FAULT OR SLIP PLANE.

STANDARD PENETRATION TEST (PENETRATION RESISTANCE) (SPT) - NUMBER OF BLOWS (N OR BPF) OF A 140 LB. HAMMER FALLING 30 INCHES REQUIRED TO PRODUCE A PENETRATION OF 1 FOOT INTO SOIL WITH A 2 INCH OUTSIDE DIAMETER SPLIT SPOON SAMPLER. SPT REFUSAL IS PENETRATION EQUAL TO OR LESS THAN 0.1 FOOT PER 60 BLOWS.

STRATA CORE RECOVERY (SREC.) - TOTAL LENGTH OF STRATA MATERIAL RECOVERED DIVIDED BY TOTAL LENGTH OF STRATUM AND EXPRESSED AS A PERCENTAGE.

STRATA ROCK QUALITY DESIGNATION (SRQD) - A MEASURE OF ROCK QUALITY DESCRIBED BY TOTAL LENGTH OF ROCK SEGMENTS WITHIN A STRATUM EQUAL TO OR GREATER THAN 4 INCHES DIVIDED BY THE TOTAL LENGTH OF STRATA AND EXPRESSED AS A PERCENTAGE.

TOPSOIL (TS.) - SURFACE SOILS USUALLY CONTAINING ORGANIC MATTER.

BENCH MARK: BM-1: RAILROAD SPIKE IN UTILITY POLE AT -L- STA. 8+68.03, 45.86' RT

ELEVATION: 102.59 FT.

NOTES:

| PROJECT REFERENCE NO. | SHEET |
| --- | --- |
| SF-320057 | 3 OF 5 |

# SITE PLAN

0 30 60
FEET

SKEW = 90°

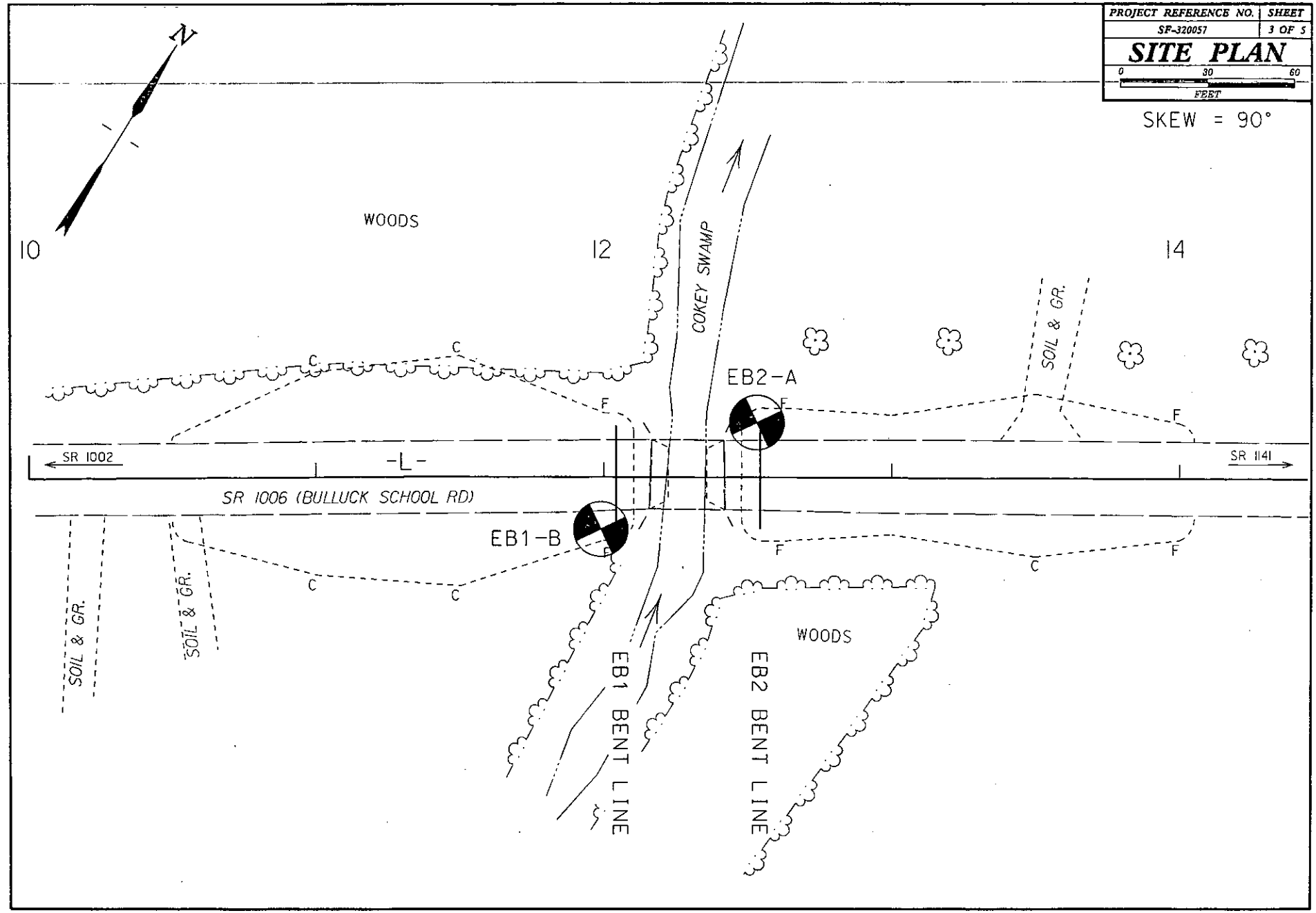

# PROFILE THROUGH BORINGS PROJECTED ALONG -L-

| PROJECT REFERENCE NO. | SHEET NO. |
|---|---|
| SF-320057 | 4 OF 5 |

INCOMPLETE PLANS
DO NOT USE FOR R/W ACQUISITION
PRELIMINARY PLANS
DO NOT USE FOR CONSTRUCTION

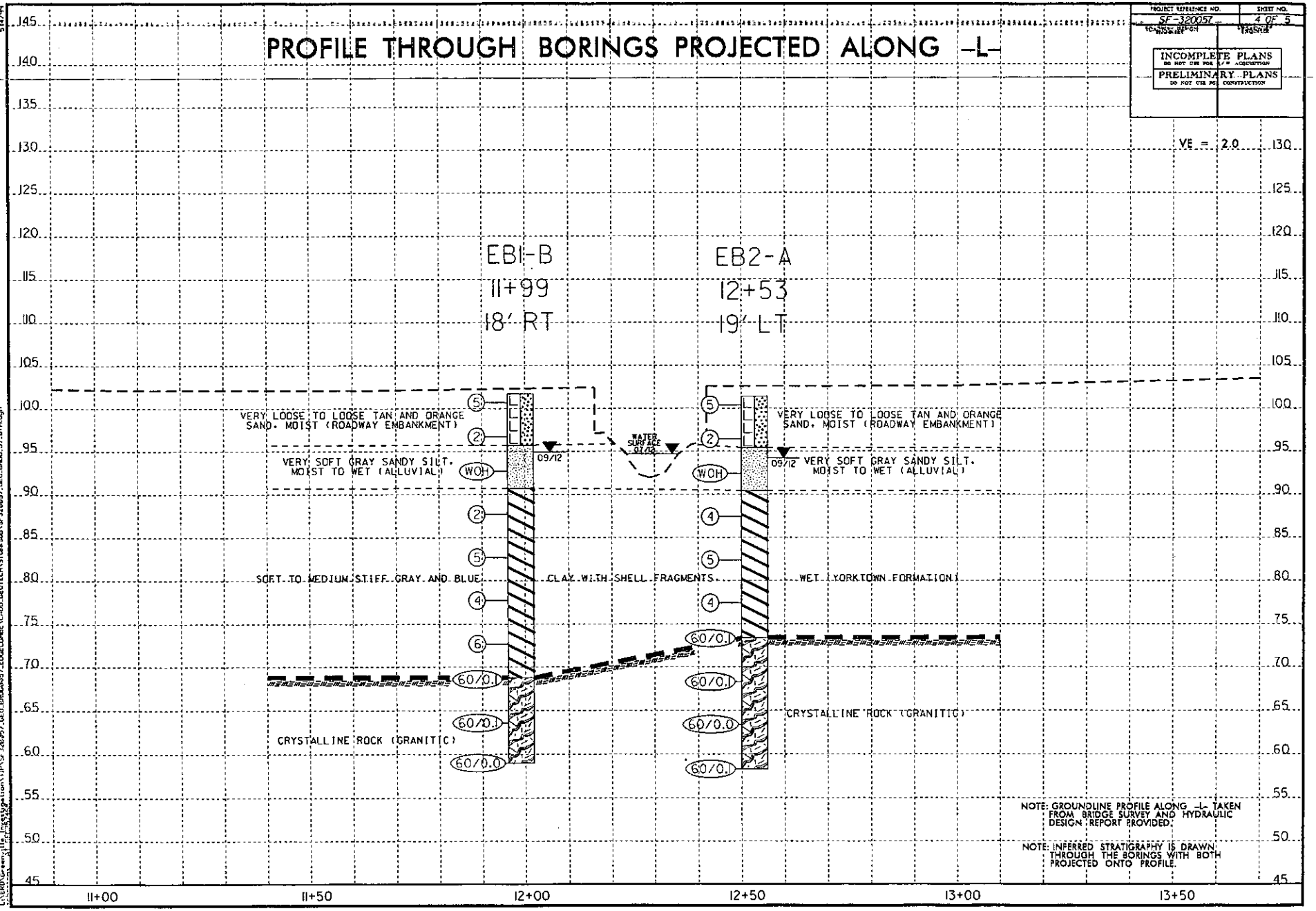


NOTE: GROUNDLINE PROFILE ALONG -L- TAKEN FROM BRIDGE SURVEY AND HYDRAULIC DESIGN REPORT PROVIDED.

NOTE: INFERRED STRATIGRAPHY IS DRAWN THROUGH THE BORINGS WITH BOTH PROJECTED ONTO PROFILE.

# NCDOT GEOTECHNICAL ENGINEERING UNIT
# BORELOG REPORT

| | | | |
|---|---|---|---|
| WBS 17BP.4.R.11 | TIP SF-320057 | COUNTY EDGECOMBE | GEOLOGIST Wrike, C. M. |
| SITE DESCRIPTION BRIDGE NO. 57 ON -L- (SR 1006) OVER COKEY SWAMP | | | GROUND WTR (ft) |
| BORING NO. EB1-B | STATION 11+99 | OFFSET 18 ft RT | ALIGNMENT -L- |
| COLLAR ELEV. 101.7 ft | TOTAL DEPTH 42.7 ft | NORTHING 776,148 | EASTING 2,357,399 |
| DRILL RIG/HAMMER EFF./DATE GFO1042 CME-550 91% 05/23/2012 | | DRILL METHOD Mud Rotary | HAMMER TYPE Automatic |
| DRILLER Smith, R. E. | START DATE 09/24/12 | COMP. DATE 09/24/12 | SURFACE WATER DEPTH N/A |

GROUND WTR (ft): 0 HR. N/A; 24 HR. 6.8

| ELEV (ft) | DRIVE ELEV (ft) | DEPTH (ft) | BLOW COUNT 0.5ft | 0.5ft | 0.5ft | BLOWS PER FOOT 0 25 50 75 100 | SAMP. NO. | MOI | LOG | SOIL AND ROCK DESCRIPTION ELEV. (ft) | DEPTH (ft) |
|---|---|---|---|---|---|---|---|---|---|---|---|
| 101.7 | 0.0 | | | | | | | | | GROUND SURFACE | 0.0 |
| | | | 2 | 2 | 3 | | | | | ROADWAY EMBANKMENT TAN AND ORANGE SAND, MOIST | |
| 97.7 | 4.0 | | | | | | | | | 95.7 | 6.0 |
| | | | WOH | 1 | 1 | | | | | ALLUVIAL GRAY SANDY SILT, MOIST TO WET | |
| 93.7 | 8.0 | | | | | | | | | 90.7 | 11.0 |
| | | | WOH | 1 | WOH | | | | | COASTAL PLAIN GRAY AND BLUE CLAY WITH SHELL FRAGMENTS, WET (YORKTOWN FORMATION) | |
| 88.7 | 13.0 | | | | | | | | | | |
| | | | 1 | 1 | 1 | | | | | | |
| 83.7 | 18.0 | | | | | | | | | | |
| | | | 1 | 2 | 3 | | | | | | |
| 78.7 | 23.0 | | | | | | | | | | |
| | | | 1 | 2 | 2 | | | | | | |
| 73.7 | 28.0 | | | | | | | | | | |
| | | | 18 | 3 | 3 | | | | | | |
| 68.7 | 33.0 | | | | | | | | | 68.8 | 32.9 |
| | | | 60/0.1 | | | | | | | CRYSTALLINE ROCK (GRANITIC) | |
| 63.7 | 38.0 | | | | | | | | | | |
| | | | 60/0.1 | | | | | | | | |
| 59.0 | 42.7 | | | | | | | | | 59.0 | 42.7 |
| | | | 60/0.0 | | | | | | | Boring Terminated at Elevation 59.0 ft in Crystalline Rock | |

| | | | |
|---|---|---|---|
| WBS 17BP.4.R.11 | TIP SF-320057 | COUNTY EDGECOMBE | GEOLOGIST Wrike, C. M. |
| SITE DESCRIPTION BRIDGE NO. 57 ON -L- (SR 1006) OVER COKEY SWAMP | | | GROUND WTR (ft) |
| BORING NO. EB2-A | STATION 12+53 | OFFSET 19 ft LT | ALIGNMENT -L- |
| COLLAR ELEV. 101.4 ft | TOTAL DEPTH 43.1 ft | NORTHING 776,158 | EASTING 2,357,463 |
| DRILL RIG/HAMMER EFF./DATE GFO1042 CME-550 91% 05/23/2012 | | DRILL METHOD Mud Rotary | HAMMER TYPE Automatic |
| DRILLER Smith, R. E. | START DATE 09/24/12 | COMP. DATE 09/24/12 | SURFACE WATER DEPTH N/A |

GROUND WTR (ft): 0 HR. N/A; 24 HR. 7.2

| ELEV (ft) | DRIVE ELEV (ft) | DEPTH (ft) | BLOW COUNT 0.5ft | 0.5ft | 0.5ft | BLOWS PER FOOT 0 25 50 75 100 | SAMP. NO. | MOI | LOG | SOIL AND ROCK DESCRIPTION |
|---|---|---|---|---|---|---|---|---|---|---|
| 101.4 | 0.0 | | | | | | | | | GROUND SURFACE 0.0 |
| | | | 2 | 2 | 3 | | | | | ROADWAY EMBANKMENT TAN AND ORANGE SAND, MOIST |
| 97.4 | 4.0 | | | | | | | | | |
| | | | 2 | 1 | 1 | | | | | |
| 93.4 | 8.0 | | | | | | | | | ALLUVIAL GRAY SANDY SILT, MOIST TO WET |
| | | | WOH | WOH | WOH | | | | | |
| 88.4 | 13.0 | | | | | | | | | COASTAL PLAIN GRAY AND BLUE CLAY WITH SHELL FRAGMENTS, WET (YORKTOWN FORMATION) |
| | | | 1 | 2 | 2 | | | | | |
| 83.4 | 18.0 | | | | | | | | | |
| | | | 1 | 2 | 3 | | | | | |
| 78.4 | 23.0 | | | | | | | | | |
| | | | WOH | 2 | 2 | | | | | |
| 73.4 | 28.0 | | | | | | | | | |
| | | | 60/0.1 | | | | | | | |
| 68.4 | 33.0 | | | | | | | | | |
| | | | 60/0.1 | | | | | | | |
| 63.4 | 38.0 | | | | | | | | | |
| | | | 60/0.0 | | | | | | | |
| 58.4 | 43.0 | | | | | | | | | |
| | | | 60/0.1 | | | | | | | |

| ELEV (ft) | DEPTH (ft) | SOIL AND ROCK DESCRIPTION |
|---|---|---|
| 95.4 | 6.0 | ALLUVIAL GRAY SANDY SILT, MOIST TO WET |
| 90.4 | 11.0 | COASTAL PLAIN GRAY AND BLUE CLAY WITH SHELL FRAGMENTS, WET (YORKTOWN FORMATION) |
| 73.4 | 28.0 | CRYSTALLINE ROCK (GRANITIC) |
| 58.3 | 43.1 | Boring Terminated at Elevation 58.3 ft in Crystalline Rock |

NCDOT BORE DOUBLE SF320057_GEO_BRDG.GPJ NC_DOT.GDT 9/27/12