WBS # 45350.3.7

CONTRACT #

EXISTING BRIDGE No. 13
28'-3" CLEAR ROADWAY
SPANS: 1 @ 35'-0"; 4 @ 35'-4"; 1 @ 40'-0"
STEEL PLANK FLOOR ON I-BEAMS
END BENTS & BENTS:
TIMBER CAPS ON TIMBER PILES

F.A. PROJECT NO.: BRZ-1539(3)

TBM: BM#1
RR SPIKE IN BASE OF 38" OAK
71.05' RIGHT OF -L- STA. 13+99.23
ELEV. 58.64

EXISTING UTILITIES TO BE RELOCATED BY OTHERS.

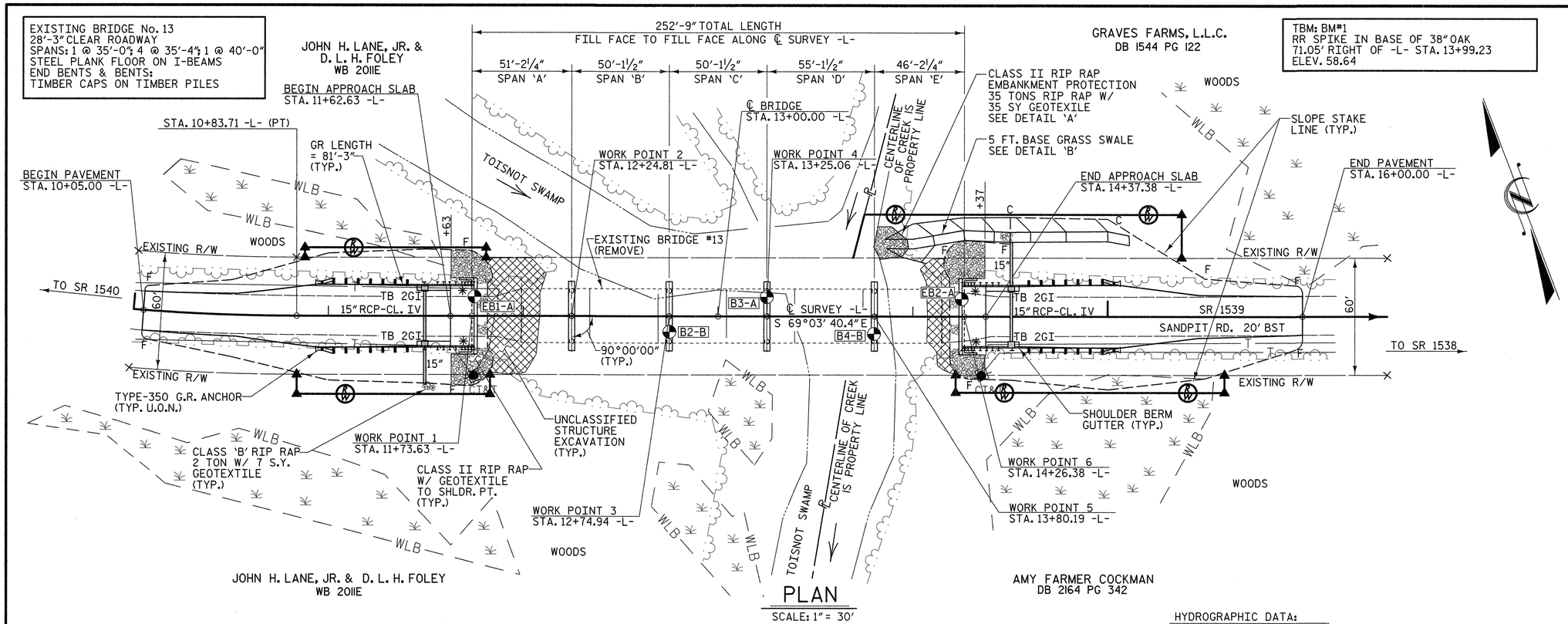

PLAN
SCALE: 1" = 30'

PI = 10+55.00 EL = 64.16'	PI = 13+00.00 EL = 65.10' VC = 100' K = 142 D.S. = 55 mph	PI = 15+50.00 EL = 64.30'
(+)0.9114% △ (+)0.3837%	(+)0.3837% △ (-)0.3200%	(-)0.3200% △ (-)0.6962%

GRADE DATA
-L- (SR 1539)

◐ DENOTES GEO-TECH BORE HOLE LOCATIONS.

✱ DENOTES TYPE III GUARDRAIL CONNECTION REQ'D. SEE "GUARDRAIL ANCHORAGE FOR VERTICAL CONCRETE BARRIER RAIL" SHEET.

NOTE: GUARDRAIL LENGTHS AS SHOWN INCLUDE ANCHOR UNITS.

U.O.N. - UNLESS OTHERWISE NOTED

FOR PAVEMENT LAYOUT, R/W LAYOUT & DITCH DETAILS SEE "ROADWAY DETAILS" SHEET

HYDROGRAPHIC DATA:

DESIGN DISCHARGE -	7820 CFS
FREQUENCY OF DESIGN FLOOD -	10 YEAR
DESIGN HIGH WATER ELEVATION -	61.4
DRAINAGE AREA -	124 SQ. MI.
BASE DISCHARGE (Q 100) -	14630 CFS
BASE HIGH WATER ELEVATION -	63.14

OVERTOPPING FLOOD DATA:

OVERTOPPING DISCHARGE -	7820+ CFS
FREQUENCY OF OVERTOPPING FLOOD -	10+ YEAR
OVERTOPPING FLOOD ELEVATION -	61.4

OVERTOPPING OCCURS 1700 FT. WEST OF PROPOSED BRIDGE END @ CENTERLINE.

I HEREBY CERTIFY THESE PLANS ARE THE AS-BUILT PLANS

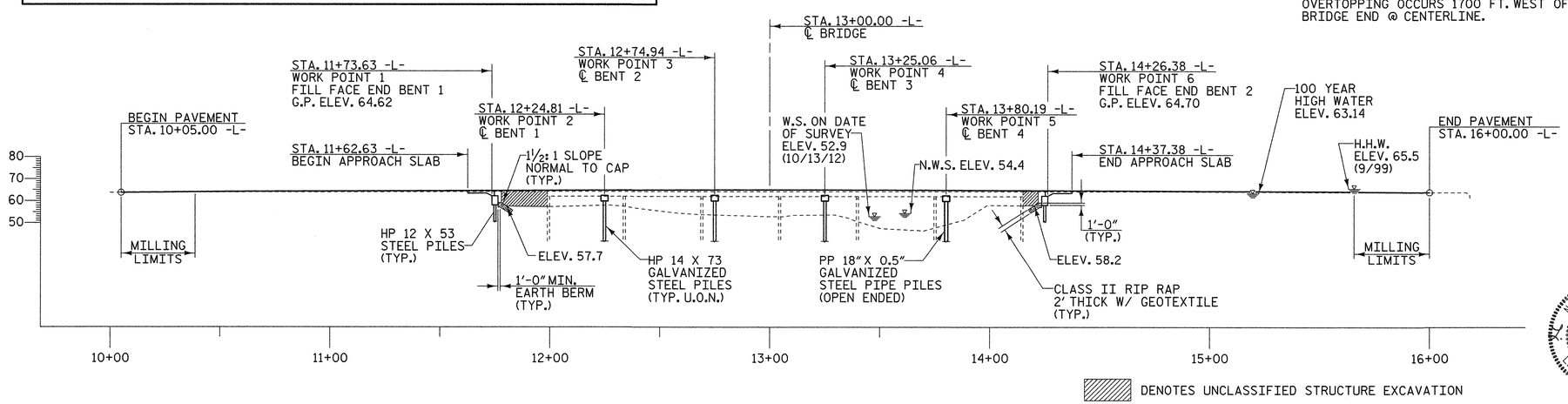

▨ DENOTES UNCLASSIFIED STRUCTURE EXCAVATION

PROFILE ALONG ℄ SURVEY
SCALE: 1" = 30'

PROJECT NO. BD-5104F
WILSON COUNTY
STATION: 13+00.00 -L-

REPLACES BRIDGE NO. 13

STATE OF NORTH CAROLINA
DEPARTMENT OF TRANSPORTATION
RALEIGH

BRIDGE ON SR 1539 OVER TOISNOT SWAMP BETWEEN SR 1540 & SR 1538

30'-10" CLEAR ROADWAY - 90° SKEW

NORTH CAROLINA PROFESSIONAL ENGINEER SEAL 19661 KEVIN AUSTIN 4/3/13

PLANS PREPARED BY:
MULKEY ENGINEERS & CONSULTANTS
PO Box 33127
Raleigh, N.C. 27636
(919) 851-1912
(919) 851-1918 (FAX)
WWW.MULKEYINC.COM
NC LICENSE NO. C-1321

REVISIONS						SHEET NO.
NO.	BY:	DATE:	NO.	BY:	DATE:	1
1			3			TOTAL SHEETS
2			4			35

DRAWN BY : W. B. ALLEN DATE : 12/12
CHECKED BY : W. A. DAVIS DATE : 12/12

4/3/2013 7:18:25 AM R:\Structures\BD5104F_S0_GD_01.dgn

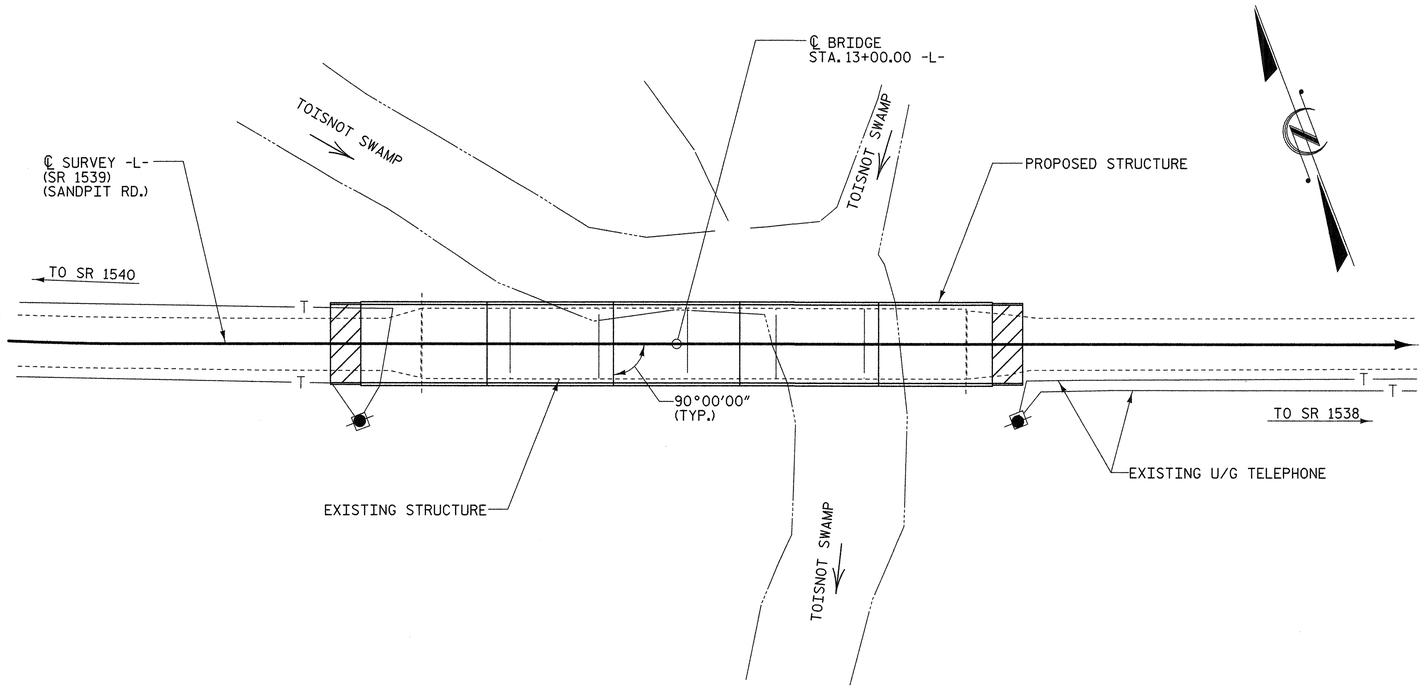

LOCATION SKETCH

TOTAL BILL OF MATERIAL

	REMOVAL OF EXISTING STRUCTURE	PDA TESTING	UNCLASSIFIED STRUCTURE EXCAVATION	CLASS A CONCRETE	BRIDGE APPROACH SLABS	REINFORCING STEEL	HP 12 X 53 STEEL PILES		HP 14 X 73 GALVANIZED STEEL PILES		PP 18 X 0.5 GALVANIZED STEEL PILES		PILE REDRIVES
	LUMP SUM	EACH	LUMP SUM	CU. YARDS	LUMP SUM	LBS.	NO.	LIN. FT.	NO.	LIN. FT.	NO.	LIN. FT.	EACH
SUPERSTRUCTURE	LUMP SUM				LUMP SUM								
END BENT 1			LUMP SUM	21.6		2636	7	385					4
BENT 1				10.8		2162			8	480			4
BENT 2				10.8		2162			8	480			4
BENT 3				10.8		2162			8	480			4
BENT 4				10.3		2102					7	420	4
END BENT 2			LUMP SUM	21.6		2636	7	350					4
TOTAL	LUMP SUM	2	LUMP SUM	85.9	LUMP SUM	13,860	14	735	24	1440	7	420	24

TOTAL BILL OF MATERIAL

	VERTICAL CONCRETE BARRIER RAIL	RIP RAP CLASS II (2'-0" THICK)	GEOTEXTILE FOR DRAINAGE	ELASTOMERIC BEARINGS	3'-0" X 1'-9" PRESTRESSED CONCRETE CORED SLABS	
	LIN. FT.	TONS	SQ. YARDS	LUMP SUM	NO.	LIN. FT.
SUPERSTRUCTURE	501.00			LUMP SUM	55	2750.00
END BENT 1		100	109			
BENT 1						
BENT 2						
BENT 3						
BENT 4						
END BENT 2		90	99			
TOTAL	501.00	190	208	LUMP SUM	55	2750.00

DRAWN BY : W. B. ALLEN DATE : 3/13
CHECKED BY : W. A. DAVIS DATE : 3/13

NOTES

ASSUMED LIVE LOAD = HL-93 OR ALTERNATE LOADING.

THIS BRIDGE HAS BEEN DESIGNED IN ACCORDANCE WITH THE AASHTO LRFD BRIDGE DESIGN SPECIFICATIONS.

THIS BRIDGE IS LOCATED IN SEISMIC ZONE 1.

FOR EROSION CONTROL MEASURES SEE EROSION CONTROL PLANS.

FOR OTHER DESIGN DATA AND GENERAL NOTES, SEE SHEET SN.

REMOVAL OF THE EXISTING BRIDGE SHALL BE PERFORMED SO AS NOT TO ALLOW DEBRIS TO FALL INTO THE WATER. THE CONTRACTOR SHALL REMOVE THE BRIDGE AND SUBMIT PLANS FOR THE DEMOLITION IN ACCORDANCE WITH ARTICLE 402-2 OF THE STANDARD SPECIFICATIONS.

THE MATERIAL SHOWN ON SHEET 1 IN THE CROSS-HATCHED AREA SHALL BE EXCAVATED FOR A DISTANCE OF 25 FT. EACH SIDE OF CENTERLINE ROADWAY AS DIRECTED BY THE ENGINEER. THIS WORK WILL BE PAID FOR AT THE CONTRACT LUMP SUM PRICE FOR UNCLASSIFIED STRUCTURE EXCAVATION.

THE SUBSTRUCTURE OF THE EXISTING BRIDGE INDICATED ON THE PLANS IS FROM THE BEST INFORMATION AVAILABLE. SINCE THIS INFORMATION IS SHOWN FOR THE CONVENIENCE OF THE CONTRACTOR, THE CONTRACTOR SHALL HAVE NO CLAIM WHATSOEVER AGAINST THE DEPARTMENT OF TRANSPORTATION FOR ANY DELAYS OR ADDITIONAL COST INCURRED BASED ON DIFFERENCES BETWEEN THE EXISTING BRIDGE SUBSTRUCTURE SHOWN ON THE PLANS AND THE ACTUAL CONDITIONS AT THE PROJECT SITE.

INASMUCH AS THE PAINT SYSTEM ON THE EXISTING STRUCTURAL STEEL CONTAINS LEAD, THE CONTRACTOR'S ATTENTION IS DIRECTED TO ARTICLE 107-1, OF THE STANDARD SPECIFICATIONS. ANY COSTS RESULTING FROM COMPLIANCE WITH APPLICABLE STATE OR FEDERAL REGULATIONS PERTAINING TO HANDLING OF MATERIALS CONTAINING LEAD BASED PAINT SHALL BE INCLUDED IN THE BID PRICE FOR "REMOVAL OF EXISTING STRUCTURE."

THIS STRUCTURE HAS BEEN DESIGNED IN ACCORDANCE WITH HEC 18, "EVALUATING SCOUR AT BRIDGES", MAY 2001.

THE CONTRACTOR SHALL PROVIDE INDEPENDENT ASSURANCE SAMPLES OF REINFORCING STEEL AS FOLLOWS: FOR PROJECTS UP TO 400 TONS OF REINFORCING STEEL, ONE 30 INCH SAMPLE OF EACH SIZE BAR USED, AND FOR PROJECTS OVER 400 TONS OF REINFORCING STEEL, TWO 30 INCH SAMPLES OF EACH SIZE BAR USED. THE BARS FROM WHICH THE SAMPLES ARE TAKEN MUST THEN BE SPLICED WITH REPLACEMENT BARS OF THE SIZE AND LENGTH OF THE SAMPLE, PLUS A MINIMUM LAP SPLICE OF THIRTY BAR DIAMETERS. PAYMENT FOR THE SAMPLES OF REINFORCING STEEL SHALL BE CONSIDERED INCIDENTAL TO VAROIUS PAY ITEMS.

FOR PILES SEE SECTION 450 OF THE STANDARD SPECIFICATIONS.

PILES AT END BENT NO. 1 ARE DESIGNED FOR A FACTORED RESISTANCE OF 70 TONS PER PILE.

DRIVE PILES AT END BENT NO. 1 TO A REQUIRED DRIVING RESISTANCE OF 120 TONS PER PILE.

PILES AT BENT NO. 1, 2, 3, AND 4 ARE DESIGNED FOR A FACTORED RESISTANCE OF 120 TONS PER PILE.

DRIVE PILES AT BENT NO. 1 AND 2 TO A REQUIRED DRIVING RESISTANCE OF 245 TONS PER PILE. THIS REQUIRED DRIVING RESISTANCE INCLUDES ADDITIONAL RESISTANCE FOR DOWNDRAG OR SCOUR.

DRIVE PILES AT BENT NO. 3 AND 4 TO A REQUIRED DRIVING RESISTANCE OF 230 TONS PER PILE. THIS REQUIRED DRIVING RESISTANCE INCLUDES ADDITIONAL RESISTANCE FOR DOWNDRAG OR SCOUR.

PILES AT END BENT NO. 2 ARE DESIGNED FOR A FACTORED RESISTANCE OF 65 TONS PER PILE.

DRIVE PILES AT END BENT NO. 2 TO A REQUIRED DRIVING RESISTANCE OF 110 TONS PER PILE.

INSTALL PILES AT BENT NO. 1, 2, AND 3 TO A TIP ELEVATION NO HIGHER THAN 23 FT., AND AT BENT NO. 4 TO A TIP ELEVATION NO HIGHER THAN 19.0 FT.

THE SCOUR CRITICAL ELEVATION FOR BENT NO. 1, 2, AND 3 IS ELEVATION 39.0 FT. AND FOR BENT NO. 4 IS ELEVATION 27.0 FT. SCOUR CRITICAL ELEVATIONS ARE USED TO MONITOR POSSIBLE SCOUR PROBLEMS DURING THE LIFE OF THE STRUCTURE.

IT HAS BEEN ESTIMATED THAT A HAMMER WITH AN EQUIVALENT RATED ENERGY IN THE RANGE OF 30 TO 45 FT-KIPS PER BLOW WILL BE REQUIRED TO DRIVE PILES AT BOTH END BENT NO. 1 AND 2. THIS ESTIMATED ENERGY RANGE DOES NOT RELEASE THE CONTRACTOR FROM PROVIDING DRIVING EQUIPMENT IN ACCORDANCE WITH SUBARTICLE 450-3(D)(2) OF THE STANDARD SPECIFICATIONS.

IT HAS BEEN ESTIMATED THAT A HAMMER WITH AN EQUIVALENT RATED ENERGY IN THE RANGE OF 50 TO 75 FT-KIPS PER BLOW WILL BE REQUIRED TO DRIVE PILES AT BENT NO. 1, 2, 3, AND 4. THIS ESTIMATED ENERGY RANGE DOES NOT RELEASE THE CONTRACTOR FROM PROVIDING DRIVING EQUIPMENT IN ACCORDANCE WITH SUBARTICLE 450-3(D)(2) OF THE STANDARD SPECIFICATIONS.

TESTING PILES WITH PILE DRIVING ANALYZER (PDA) DURING DRIVING, RESTRIKING OR REDRIVING MAY BE REQUIRED. THE ENGINEER WILL DETERMINE THE NEED FOR PDA TESTING. FOR PILE DRIVING ANALYZER TESTING, SEE SECTION 450 OF THE STANDARD SPECIFICATIONS AND FOR PILE DRIVING CRITERIA, SEE PILE DRIVING CRITERIA PROVISION.

FOR BENT NO. 1, 2, 3, AND 4 ONLY PARTIAL GALVANIZING OF THE PILES IS REQUIRED. SEE INTERIOR BENT SHEET FOR REQUIRED GALVANIZED LENGTHS. PAYMENT FOR PARTILLY GALVANIZED PILES SHALL BE MADE UNDER THE CONTRACT UNIT PRICE FOR GALVANIZED STEEL PILES.

ADT = 950 FOR YEAR 2003.

ROADWAY APPROACH EMBANKMENT SHALL BE WIDENED AS NECESSARY FOR GUARDRAIL INSTALLATION.

FOR SUBMITTAL OF WORKING DRAWINGS, SEE SPECIAL PROVISIONS.

FOR FALSEWORK AND FORMWORK, SEE SPECIAL PROVISIONS.

FOR CRANE SAFETY, SEE SPECIAL PROVISIONS.

FOR GROUT FOR STRUCTURES, SEE SPECIAL PROVISIONS.

NO DECK DRAINS REQUIRED.

ASPHALT WEARING SURFACE IS INCLUDED IN ROADWAY QUANTITY ON ROADWAY PLANS.

PROJECT NO. BD-5104F
WILSON COUNTY
STATION: 13+00.00 -L-

REPLACES BRIDGE NO. 13

NORTH CAROLINA PROFESSIONAL SEAL 19661 ENGINEER KEVIN AUSTIN 4/3/13

PLANS PREPARED BY:
MULKEY ENGINEERS & CONSULTANTS
PO Box 33127
Raleigh, N.C. 27636
(919) 851-1912
(919) 851-1918 (FAX)
WWW.MULKEYINC.COM
NC LICENSE NO. C-1081

STATE OF NORTH CAROLINA
DEPARTMENT OF TRANSPORTATION
RALEIGH

LOCATION SKETCH & TOTAL BILL OF MATERIAL

30'-10" CLEAR ROADWAY - 90° SKEW

REVISIONS						SHEET NO.
NO.	BY:	DATE:	NO.	BY:	DATE:	2
1			3			TOTAL SHEETS
2			4			35

4/3/2013 7:20:03 AM R:\Structures\BD5104F_SD_GD_02.dgn

LOAD AND RESISTANCE FACTOR RATING (LRFD) SUMMARY FOR PRESTRESSED CONCRETE GIRDERS

LEVEL		VEHICLE	WEIGHT (W) (TONS)	CONTROLLING LOAD RATING	MINIMUM RATING FACTORS (RF)	TONS = W X RF	STRENGTH I LIMIT STATE											SERVICE III LIMIT STATE						COMMENT NUMBER
							LIVELOAD FACTORS	MOMENT					SHEAR					LIVELOAD FACTORS	MOMENT					
								DISTRIBUTION FACTORS (DF)	RATING FACTOR	SPAN	GIRDER LOCATION	DISTANCE FROM LEFT END OF SPAN (ft)	DISTRIBUTION FACTORS (DF)	RATING FACTOR	SPAN	GIRDER LOCATION	DISTANCE FROM LEFT END OF SPAN (ft)		DISTRIBUTION FACTORS (DF)	RATING FACTOR	SPAN	GIRDER LOCATION	DISTANCE FROM LEFT END OF SPAN (ft)	
DESIGN LOAD RATING		HL-93(Inv)	N/A	1	1.394	--	1.75	0.276	1.57	50'	EL	24.5	0.531	**1.39**	50'	EL	**2.45**	0.80	0.276	1.44	50'	EL	24.5	
		HL-93(Opr)	N/A	--	1.807	--	1.35	0.276	2.03	50'	EL	24.5	0.531	1.81	50'	EL	2.45	N/A	--	--	--	--	--	
		HS-20(Inv)	36.000	**2**	1.667	60.007	1.75	0.276	1.95	50'	EL	24.5	0.531	**1.67**	50'	EL	**2.45**	0.80	0.276	1.79	50'	EL	24.5	
		HS-20(Opr)	36.000	--	2.161	77.787	1.35	0.276	2.52	50'	EL	24.5	0.531	2.16	50'	EL	2.45	N/A	--	--	--	--	--	
LEGAL LOAD RATING	SV	SNSH	13.500	--	3.635	49.079	1.4	0.276	4.95	50'	EL	24.5	0.531	4.7	50'	EL	2.45	0.80	0.276	3.64	50'	EL	24.5	
		SNGARBS2	20.000	--	2.871	57.42	1.4	0.276	3.91	50'	EL	24.5	0.531	3.42	50'	EL	2.45	0.80	0.276	2.87	50'	EL	24.5	
		SNAGRIS2	22.000	--	2.778	61.109	1.4	0.276	3.78	50'	EL	19.6	0.531	3.21	50'	EL	2.45	0.80	0.276	2.78	50'	EL	24.5	
		SNCOTTS3	27.250	--	1.814	49.418	1.4	0.276	2.47	50'	EL	24.5	0.531	2.36	50'	EL	2.45	0.80	0.276	1.81	50'	EL	24.5	
		SNAGGRS4	34.925	--	1.577	55.063	1.4	0.276	2.15	50'	EL	24.5	0.531	2.01	50'	EL	2.45	0.80	0.276	1.58	50'	EL	24.5	
		SNS5A	35.550	--	1.537	54.657	1.4	0.276	2.09	50'	EL	24.5	0.531	2.07	50'	EL	2.45	0.80	0.276	1.54	50'	EL	24.5	
		SNS6A	39.950	--	1.438	57.43	1.4	0.276	1.96	50'	EL	24.5	0.531	1.91	50'	EL	2.45	0.80	0.276	1.44	50'	EL	24.5	
		SNS7B	42.000	--	1.370	57.54	1.4	0.276	1.87	50'	EL	24.5	0.531	1.91	50'	EL	2.45	0.80	0.276	1.37	50'	EL	24.5	
	TTST	TNAGRIT3	33.000	--	1.761	58.118	1.4	0.276	2.4	50'	EL	24.5	0.531	2.25	50'	EL	2.45	0.80	0.276	1.76	50'	EL	24.5	
		TNT4A	33.075	--	1.777	58.759	1.4	0.276	2.42	50'	EL	24.5	0.531	2.17	50'	EL	2.45	0.80	0.276	1.78	50'	EL	24.5	
		TNT6A	41.600	--	1.480	61.558	1.4	0.276	2.01	50'	EL	24.5	0.531	2.08	50'	EL	2.45	0.80	0.276	1.48	50'	EL	24.5	
		TNT7A	42.000	--	1.502	63.087	1.4	0.276	2.05	50'	EL	24.5	0.531	1.94	50'	EL	2.45	0.80	0.276	1.50	50'	EL	24.5	
		TNT7B	42.000	--	1.566	65.773	1.4	0.276	2.13	50'	EL	24.5	0.531	1.84	50'	EL	2.45	0.80	0.276	1.57	50'	EL	24.5	
		TNAGRIT4	43.000	--	1.486	63.902	1.4	0.276	2.02	50'	EL	24.5	0.531	1.77	50'	EL	2.45	0.80	0.276	1.49	50'	EL	24.5	
		TNAGT5A	45.000	--	1.388	62.47	1.4	0.276	1.89	50'	EL	24.5	0.531	1.8	50'	EL	2.45	0.80	0.276	1.39	50'	EL	24.5	
		TNAGT5B	45.000	**3**	1.360	61.206	1.4	0.276	1.85	50'	EL	24.5	0.531	1.68	50'	EL	2.45	0.80	0.276	**1.36**	50'	EL	**24.5**	

LOAD FACTORS:

DESIGN LOAD RATING FACTORS	LIMIT STATE	γ_{DC}	γ_{DW}
	STRENGTH I	1.25	1.50
	SERVICE III	1.00	1.00

NOTES:

MINIMUM RATING FACTORS ARE BASED ON THE STRENGTH I AND SERVICE III LIMIT STATES.

ALLOWABLE STRESSES FOR SERVICE III LIMIT STATE ARE AS REQUIRED FOR DESIGN.

COMMENTS:

1.
2.
3.
4.

(#) CONTROLLING LOAD RATING

(1) DESIGN LOAD RATING (HL-93)

(2) DESIGN LOAD RATING (HS-20)

(3) LEGAL LOAD RATING **

** SEE CHART FOR VEHICLE TYPE

GIRDER LOCATION

I - INTERIOR GIRDER
EL - EXTERIOR LEFT GIRDER
ER - EXTERIOR RIGHT GIRDER

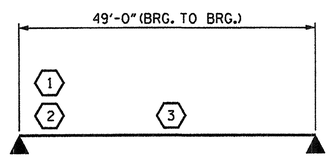

LRFR SUMMARY

FOR SPANS 'A', 'B', & 'C'

PROJECT NO. BD-5104F
WILSON COUNTY
STATION: 13+00.00 -L-

STATE OF NORTH CAROLINA
DEPARTMENT OF TRANSPORTATION
RALEIGH

STANDARD

LRFR SUMMARY FOR 50' CORED SLAB UNIT 90° SKEW (NON-INTERSTATE TRAFFIC)

NORTH CAROLINA PROFESSIONAL SEAL 044045 ENGINEER TIMOTHY L. COGGIN
03/08/13

REVISIONS								SHEET NO. 3
NO.	BY:	DATE:	NO.	BY:	DATE:			TOTAL SHEETS 35
1			3					
2			4					

ASSEMBLED BY :	N. RUFFIN	DATE :	1/11/13
CHECKED BY :	M. AHMED	DATE :	2/26/13
DRAWN BY : CVC	6/10		
CHECKED BY : DNS	6/10		

08-MAR-2013 14:07
S:\DPG1\Tlm\Division 4 LIBR\BD-5104F\BD5104F_sm_Draft_standards_01.dgn
nruffin

STD. NO. 21LRFR1_90S_50L

LOAD AND RESISTANCE FACTOR RATING (LRFD) SUMMARY FOR PRESTRESSED CONCRETE GIRDERS

LEVEL		VEHICLE	WEIGHT (W) (TONS)	CONTROLLING LOAD RATING	MINIMUM RATING FACTORS (RF)	TONS = W X RF	STRENGTH I LIMIT STATE											SERVICE III LIMIT STATE						COMMENT NUMBER
								MOMENT					SHEAR						MOMENT					
							LIVELOAD FACTORS	DISTRIBUTION FACTORS (DF)	RATING FACTOR	SPAN	GIRDER LOCATION	DISTANCE FROM LEFT END OF SPAN (ft)	DISTRIBUTION FACTORS (DF)	RATING FACTOR	SPAN	GIRDER LOCATION	DISTANCE FROM LEFT END OF SPAN (ft)	LIVELOAD FACTORS	DISTRIBUTION FACTORS (DF)	RATING FACTOR	SPAN	GIRDER LOCATION	DISTANCE FROM LEFT END OF SPAN (ft)	
DESIGN LOAD RATING		HL-93(Inv)	N/A	1	1.055	--	1.75	0.275	1.23	55'	EL	27	0.523	1.23	55'	EL	5.4	0.80	0.275	**1.05**	55'	EL	**27**	
		HL-93(Opr)	N/A	--	1.591	--	1.35	0.275	1.59	55'	EL	27	0.523	1.59	55'	EL	5.4	N/A	--	--	--	--	--	
		HS-20(Inv)	36.000	2	1.322	47.585	1.75	0.275	1.54	55'	EL	27	0.523	1.47	55'	EL	5.4	0.80	0.275	**1.32**	55'	EL	**27**	
		HS-20(Opr)	36.000	--	1.9	68.396	1.35	0.275	1.99	55'	EL	27	0.523	1.9	55'	EL	5.4	N/A	--	--	--	--	--	
LEGAL LOAD RATING	SV	SNSH	13.500	--	2.776	37.476	1.4	0.275	4.04	55'	EL	27	0.523	4.17	55'	EL	5.4	0.80	0.275	2.78	55'	EL	27	
		SNGARBS2	20.000	--	2.155	43.095	1.4	0.275	3.14	55'	EL	27	0.523	3.02	55'	EL	5.4	0.80	0.275	2.15	55'	EL	27	
		SNAGRIS2	22.000	--	2.079	45.734	1.4	0.275	3.03	55'	EL	27	0.523	2.83	55'	EL	5.4	0.80	0.275	2.08	55'	EL	27	
		SNCOTTS3	27.250	--	1.384	37.708	1.4	0.275	2.01	55'	EL	27	0.523	2.09	55'	EL	5.4	0.80	0.275	1.38	55'	EL	27	
		SNAGGRS4	34.925	--	1.189	41.527	1.4	0.275	1.73	55'	EL	27	0.523	1.77	55'	EL	5.4	0.80	0.275	1.19	55'	EL	27	
		SNS5A	35.550	--	1.16	41.255	1.4	0.275	1.69	55'	EL	27	0.523	1.82	55'	EL	5.4	0.80	0.275	1.16	55'	EL	27	
		SNS6A	39.950	--	1.079	43.102	1.4	0.275	1.57	55'	EL	27	0.523	1.68	55'	EL	5.4	0.80	0.275	1.08	55'	EL	27	
		SNS7B	42.000	--	1.028	43.175	1.4	0.275	1.5	55'	EL	27	0.523	1.67	55'	EL	5.4	0.80	0.275	1.03	55'	EL	27	
	TTST	TNAGRIT3	33.000	--	1.32	43.556	1.4	0.275	1.92	55'	EL	27	0.523	1.98	55'	EL	5.4	0.80	0.275	1.32	55'	EL	27	
		TNT4A	33.075	--	1.33	43.979	1.4	0.275	1.94	55'	EL	27	0.523	1.91	55'	EL	5.4	0.80	0.275	1.33	55'	EL	27	
		TNT6A	41.600	--	1.101	45.811	1.4	0.275	1.6	55'	EL	27	0.523	1.83	55'	EL	5.4	0.80	0.275	1.10	55'	EL	27	
		TNT7A	42.000	--	1.114	46.804	1.4	0.275	1.62	55'	EL	27	0.523	1.71	55'	EL	5.4	0.80	0.275	1.11	55'	EL	27	
		TNT7B	42.000	--	1.163	48.848	1.4	0.275	1.69	55'	EL	27	0.523	1.62	55'	EL	5.4	0.80	0.275	1.16	55'	EL	27	
		TNAGRIT4	43.000	--	1.101	47.33	1.4	0.275	1.6	55'	EL	27	0.523	1.56	55'	EL	5.4	0.80	0.275	1.10	55'	EL	27	
		TNAGT5A	45.000	--	1.031	46.405	1.4	0.275	1.5	55'	EL	27	0.523	1.58	55'	EL	5.4	0.80	0.275	1.03	55'	EL	27	
		TNAGT5B	45.000	3	1.013	45.582	1.4	0.275	1.47	55'	EL	27	0.523	1.48	55'	EL	5.4	0.80	0.275	**1.01**	55'	EL	**27**	

LOAD FACTORS:

DESIGN LOAD RATING FACTORS	LIMIT STATE	γ_{DC}	γ_{DW}
	STRENGTH I	1.25	1.50
	SERVICE III	1.00	1.00

NOTES:

MINIMUM RATING FACTORS ARE BASED ON THE STRENGTH I AND SERVICE III LIMIT STATES.

ALLOWABLE STRESSES FOR SERVICE III LIMIT STATE ARE AS REQUIRED FOR DESIGN.

COMMENTS:

1.
2.
3.
4.

CONTROLLING LOAD RATING
1 DESIGN LOAD RATING (HL-93)
2 DESIGN LOAD RATING (HS-20)
3 LEGAL LOAD RATING **
** SEE CHART FOR VEHICLE TYPE

GIRDER LOCATION
I - INTERIOR GIRDER
EL - EXTERIOR LEFT GIRDER
ER - EXTERIOR RIGHT GIRDER

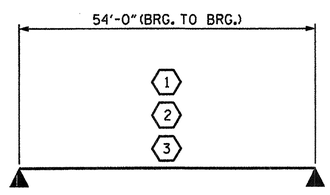

LRFR SUMMARY

FOR SPAN 'D'

PROJECT NO. BD-5104F

WILSON COUNTY

STATION: 13+00.00 -L-

STATE OF NORTH CAROLINA
DEPARTMENT OF TRANSPORTATION
RALEIGH

STANDARD

LRFR SUMMARY FOR 55' CORED SLAB UNIT 90° SKEW (NON-INTERSTATE TRAFFIC)

NORTH CAROLINA PROFESSIONAL SEAL 14045 ENGINEER TIMOTHY L. COCKINS

05/01/13

REVISIONS						SHEET NO.
NO.	BY:	DATE:	NO.	BY:	DATE:	4
1			3			TOTAL SHEETS
2			4			35

ASSEMBLED BY : N. RUFFIN DATE : 1/11/13
CHECKED BY : M. AHMED DATE : 2/26/13

DRAWN BY : CVC 6/10
CHECKED BY : DNS 6/10

08-MAR-2013 14:07
S:\DPG1\Tim\Division 4 LIBR\BD-5104F\BD5104F_sm_Draft_standards_01.dgn
nruffin

STD. NO. 21LRFR1_90S_55L

LOAD AND RESISTANCE FACTOR RATING (LRFD) SUMMARY FOR PRESTRESSED CONCRETE GIRDERS

LEVEL		VEHICLE	WEIGHT (W) (TONS)	CONTROLLING LOAD RATING	MINIMUM RATING FACTORS (RF)	TONS = W X RF	STRENGTH I LIMIT STATE											SERVICE III LIMIT STATE						COMMENT NUMBER
								MOMENT					SHEAR						MOMENT					
							LIVELOAD FACTORS	DISTRIBUTION FACTORS (DF)	RATING FACTOR	SPAN	GIRDER LOCATION	DISTANCE FROM LEFT END OF SPAN (ft)	DISTRIBUTION FACTORS (DF)	RATING FACTOR	SPAN	GIRDER LOCATION	DISTANCE FROM LEFT END OF SPAN (ft)	LIVELOAD FACTORS	DISTRIBUTION FACTORS (DF)	RATING FACTOR	SPAN	GIRDER LOCATION	DISTANCE FROM LEFT END OF SPAN (ft)	
DESIGN LOAD RATING		HL-93(Inv)	N/A	1	1.088	--	1.75	0.277	1.34	45'	EL	22	0.539	1.23	45'	EL	2.2	0.80	0.277	**1.09**	45'	EL	**22**	
		HL-93(Opr)	N/A	--	1.590	--	1.35	0.277	1.74	45'	EL	22	0.539	1.59	45'	EL	2.2	N/A	--	--	--	--	--	
		HS-20(Inv)	36.000	2	1.336	48.104	1.75	0.277	1.65	45'	EL	22	0.539	1.45	45'	EL	2.2	0.80	0.277	**1.34**	45'	EL	**22**	
		HS-20(Opr)	36.000	--	1.882	67.763	1.35	0.277	2.14	45'	EL	22	0.539	1.88	45'	EL	2.2	N/A	--	--	--	--	--	
LEGAL LOAD RATING	SV	SNSH	13.500	--	2.611	35.252	1.4	0.277	4.02	45'	EL	22	0.539	4.01	45'	EL	2.2	0.80	0.277	2.61	45'	EL	22	
		SNGARBS2	20.000	--	2.108	42.166	1.4	0.277	3.25	45'	EL	22	0.539	2.94	45'	EL	2.2	0.80	0.277	2.11	45'	EL	22	
		SNAGRIS2	22.000	--	2.067	45.466	1.4	0.277	3.15	45'	EL	17.6	0.539	2.77	45'	EL	2.2	0.80	0.277	2.07	45'	EL	22	
		SNCOTTS3	27.250	--	1.304	35.527	1.4	0.277	2.01	45'	EL	22	0.539	2.01	45'	EL	2.2	0.80	0.277	1.30	45'	EL	22	
		SNAGGRS4	34.925	--	1.150	40.181	1.4	0.277	1.77	45'	EL	22	0.539	1.74	45'	EL	2.2	0.80	0.277	1.15	45'	EL	22	
		SNS5A	35.550	--	1.121	39.841	1.4	0.277	1.73	45'	EL	22	0.539	1.79	45'	EL	2.2	0.80	0.277	1.12	45'	EL	22	
		SNS6A	39.950	--	1.056	42.175	1.4	0.277	1.63	45'	EL	22	0.539	1.67	45'	EL	2.2	0.80	0.277	1.06	45'	EL	22	
		SNS7B	42.000	3	1.006	42.268	1.4	0.277	1.55	45'	EL	22	0.539	1.68	45'	EL	2.2	0.80	0.277	**1.01**	45'	EL	**22**	
	TTST	TNAGRIT3	33.000	--	1.296	42.759	1.4	0.277	2	45'	EL	22	0.539	1.96	45'	EL	2.2	0.80	0.277	1.30	45'	EL	22	
		TNT4A	33.075	--	1.309	43.305	1.4	0.277	2.02	45'	EL	22	0.539	1.88	45'	EL	2.2	0.80	0.277	1.31	45'	EL	22	
		TNT6A	41.600	--	1.099	45.712	1.4	0.277	1.69	45'	EL	22	0.539	1.83	45'	EL	2.2	0.80	0.277	1.10	45'	EL	22	
		TNT7A	42.000	--	1.120	47.043	1.4	0.277	1.73	45'	EL	22	0.539	1.69	45'	EL	2.2	0.80	0.277	1.12	45'	EL	22	
		TNT7B	42.000	--	1.166	48.975	1.4	0.277	1.8	45'	EL	22	0.539	1.61	45'	EL	2.2	0.80	0.277	1.17	45'	EL	22	
		TNAGRIT4	43.000	--	1.111	47.757	1.4	0.277	1.71	45'	EL	22	0.539	1.55	45'	EL	2.2	0.80	0.277	1.11	45'	EL	22	
		TNAGT5A	45.000	--	1.033	46.505	1.4	0.277	1.59	45'	EL	22	0.539	1.59	45'	EL	2.2	0.80	0.277	1.03	45'	EL	22	
		TNAGT5B	45.000	--	1.009	45.408	1.4	0.277	1.56	45'	EL	22	0.539	1.47	45'	EL	2.2	0.80	0.277	1.01	45'	EL	22	

LOAD FACTORS:

DESIGN LOAD RATING FACTORS	LIMIT STATE	γ_{DC}	γ_{DW}
	STRENGTH I	1.25	1.50
	SERVICE III	1.00	1.00

NOTES:

MINIMUM RATING FACTORS ARE BASED ON THE STRENGTH I AND SERVICE III LIMIT STATES.

ALLOWABLE STRESSES FOR SERVICE III LIMIT STATE ARE AS REQUIRED FOR DESIGN.

COMMENTS:

1.
2.
3.
4.

(#) CONTROLLING LOAD RATING

(1) DESIGN LOAD RATING (HL-93)
(2) DESIGN LOAD RATING (HS-20)
(3) LEGAL LOAD RATING **

** SEE CHART FOR VEHICLE TYPE

GIRDER LOCATION

I - INTERIOR GIRDER
EL - EXTERIOR LEFT GIRDER
ER - EXTERIOR RIGHT GIRDER

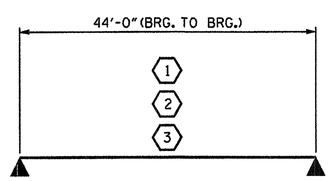

LRFR SUMMARY
FOR SPAN 'E'

PROJECT NO. BD-5104F
WILSON COUNTY
STATION: 13+00.00 -L-

STATE OF NORTH CAROLINA
DEPARTMENT OF TRANSPORTATION
RALEIGH

STANDARD
LRFR SUMMARY FOR
45' CORED SLAB UNIT
90° SKEW
(NON-INTERSTATE TRAFFIC)

NORTH CAROLINA PROFESSIONAL SEAL 14045 ENGINEER TIMOTHY L. COGGINS
03/08/13

REVISIONS								SHEET NO.
NO.	BY:	DATE:	NO.	BY:	DATE:			5
1			3					TOTAL SHEETS
2			4					35

ASSEMBLED BY :	N. RUFFIN	DATE :	1/11/13
CHECKED BY :	M. AHMED	DATE :	2/26/13
DRAWN BY : CVC	6/10		
CHECKED BY : DNS	6/10		

08-MAR-2013 14:07
S:\DPG1\Tim\Division 4 LIBR\BD-5104F\BD5104F_sm_Draft_standards_01.dgn
nruffin

STD. NO. 21LRFR1_90S_45L

HORIZONTAL CURVE DATA

PI Sta 10+41.88
Δ = 4° 37′ 46.2″ (LT)
D = 5° 31′ 49.7″
L = 83.71′
T = 41.88′
R = 1,036.00′

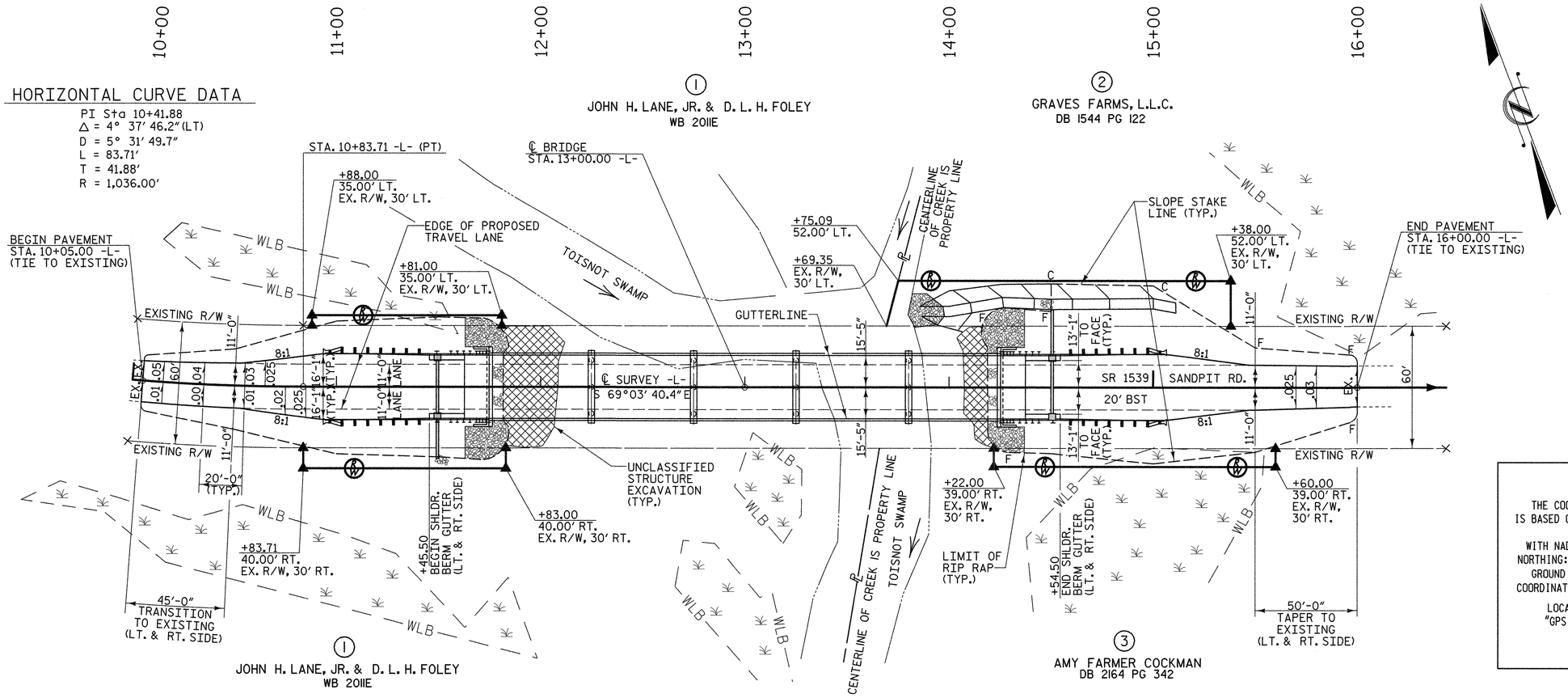

PAVEMENT LAYOUT DETAIL

SCALE: 1″ = 30′

DETAIL A
RIP RAP AT EMBANKMENT
(Not to Scale)

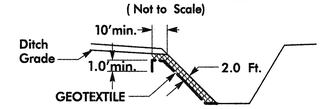

Type of Liner = 35 TONS, CL II Rip-Rap
Geotextile = 35 sy

STA. 13+85 LT

DETAIL B
SPECIAL CUT GRASSED SWALE
(Not to Scale)

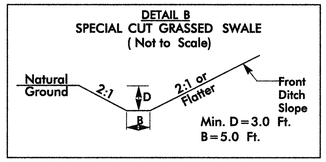

FROM STA. 13+86 TO STA. 15+11 LT

DATUM DESCRIPTION

THE COORDINATE SYSTEM DEVELOPED FOR THIS PROJECT IS BASED ON THE STATE PLANE COORDINATES ESTABLISHED BY NCDOT FOR MONUMENT "GPS BD-5104F-1" WITH NAD 1983/2007 STATE PLANE GRID COORDINATES OF NORTHING: 674457.405(ft) EASTING: 2358680.4400(ft) GROUND DISTANCES IN FIELD WERE USED TO DETERMINE COORDINATES FOR "GPS BD-5104F-2" AND "GPS BD-5104F-3"

LOCALIZED HORIZONTAL GROUND DISTANCE FROM "GPS BD-5104F-1" TO -L- STATION 10+83.71 IS N 67° 58′ 20.5″ W 653.39′

VERTICAL DATUM USED IS NAVD 88

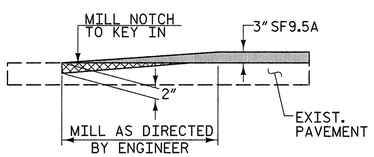

MILLING DETAIL

MILL EXISTING PAVEMENT AT THE FOLLOWING LOCATIONS
-L- STA. 10+05.00 TO STA. 10+39+/-
-L- STA. 15+65+/- TO STA. 16+00.00

RIGHT OF WAY AREA DATA

PARCEL NO.	PROPERTY OWNERS NAMES	TOTAL AREA	AREA TAKEN	AREA REMAINING RT.	AREA REMAINING LT.	CONST. EASE.	PERM. DRAIN. EASE.	TEMP. DRAIN. EASE.
1	JOHN H. LANE, JR. & D. L. H. FOLEY	732.26 AC	1438 SF					
2	GRAVES FARMS, L.L.C.	124 AC	3647 SF		123.92 AC			
3	AMY FARMER COCKMAN	59 AC	1242 SF	58.97 AC				

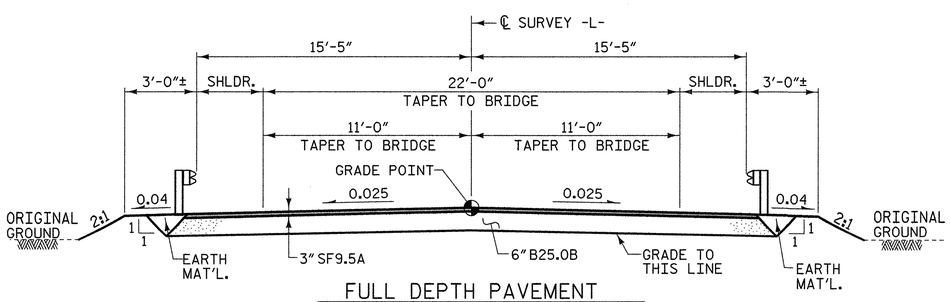

FULL DEPTH PAVEMENT

FROM -L- STA. 11+50 TO BEGIN BRIDGE
FROM END BRIDGE TO -L- STA. 14+50

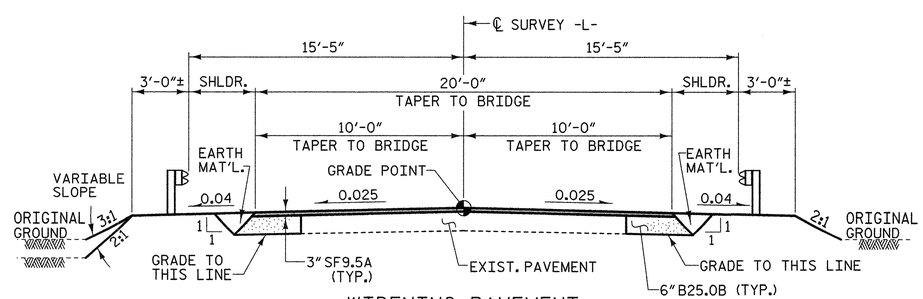

WIDENING PAVEMENT

FROM -L- STA. 10+05.00 TO -L- STA. 11+50
FROM -L- STA. 14+50 TO -L- STA. 16+00.00

TYPICAL ROADWAY SECTION

WITHIN CONSTRUCTION LIMITS

PROJECT NO. BD-5104F
WILSON COUNTY
STATION: 13+00.00 -L-

REPLACES BRIDGE NO. 13

STATE OF NORTH CAROLINA
DEPARTMENT OF TRANSPORTATION
RALEIGH

ROADWAY DETAILS

30′-10″ CLEAR ROADWAY - 90° SKEW

NORTH CAROLINA PROFESSIONAL SEAL 19661 ENGINEER KEVIN AUSTIN 4/3/13

PLANS PREPARED BY:
MULKEY ENGINEERS & CONSULTANTS
PO BOX 33127 RALEIGH, N.C. 27636
(919) 851-1912
(919) 851-1918 (FAX)
WWW.MULKEYINC.COM
NC LICENSE NO. C-1321

REVISIONS						SHEET NO.
NO.	BY:	DATE:	NO.	BY:	DATE:	6
1			3			TOTAL SHEETS
2			4			35

DRAWN BY : W. B. ALLEN DATE : 12/12
CHECKED BY : W. A. DAVIS DATE : 12/12

4/3/2013 7:20:59 AM R:\Structures\BD5104F_SD_02_03.dgn

0 2.5 5	PROJ. REFERENCE NO.	SHEET NO.
	BD-5104F	7

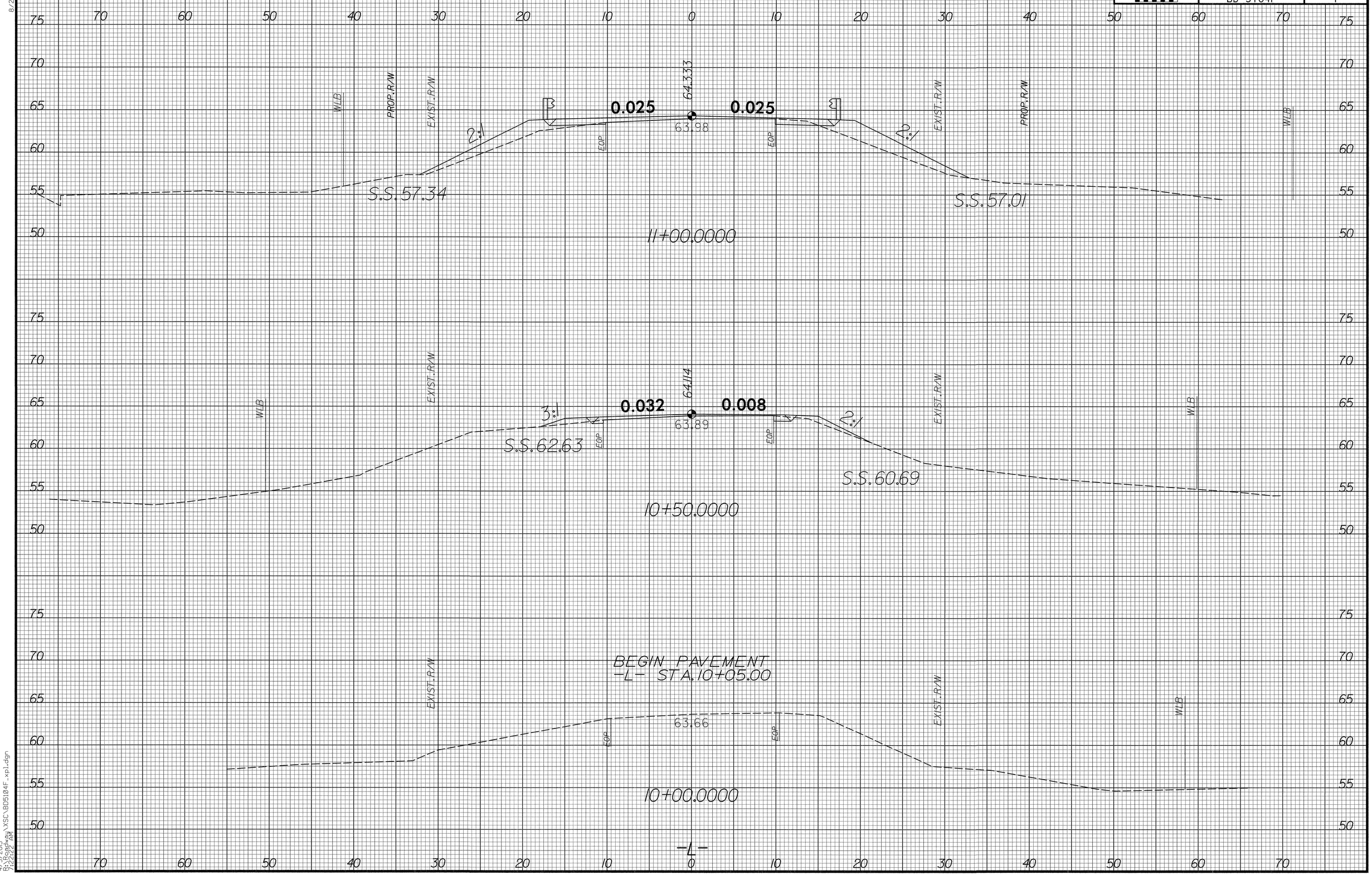

8/23/99

4/3/2013
9:22:29 AM
V:\SCV\BD5104F_xp1.dgn

0 2.5 5	PROJ. REFERENCE NO.	SHEET NO.
	BD-5104F	8

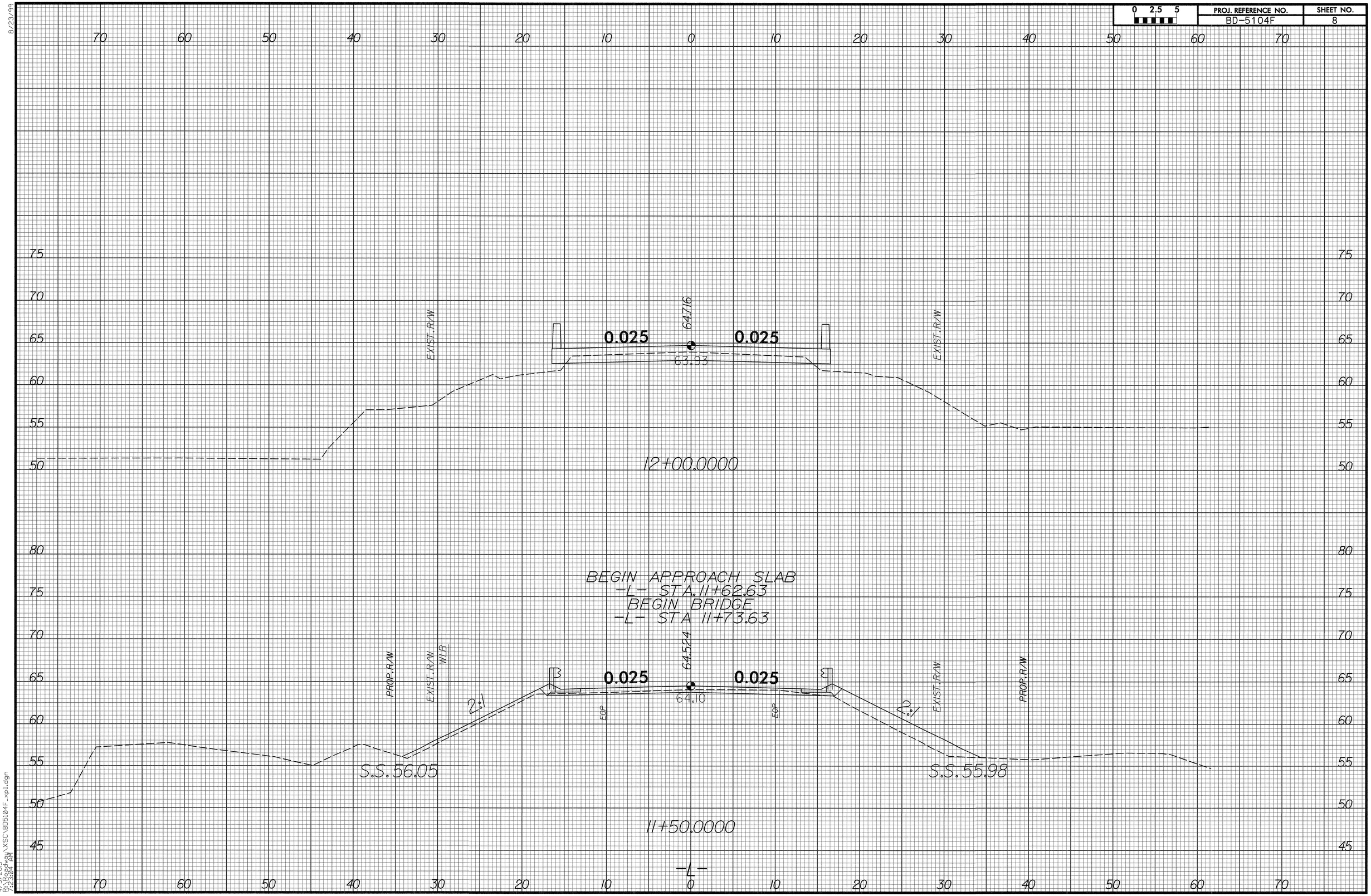

8/23/99

4/3/2013
9:23:32 AM
\XSC\BD5104F_xp1.dgn

0 2.5 5	PROJ. REFERENCE NO.	SHEET NO.
	BD-5104F	9

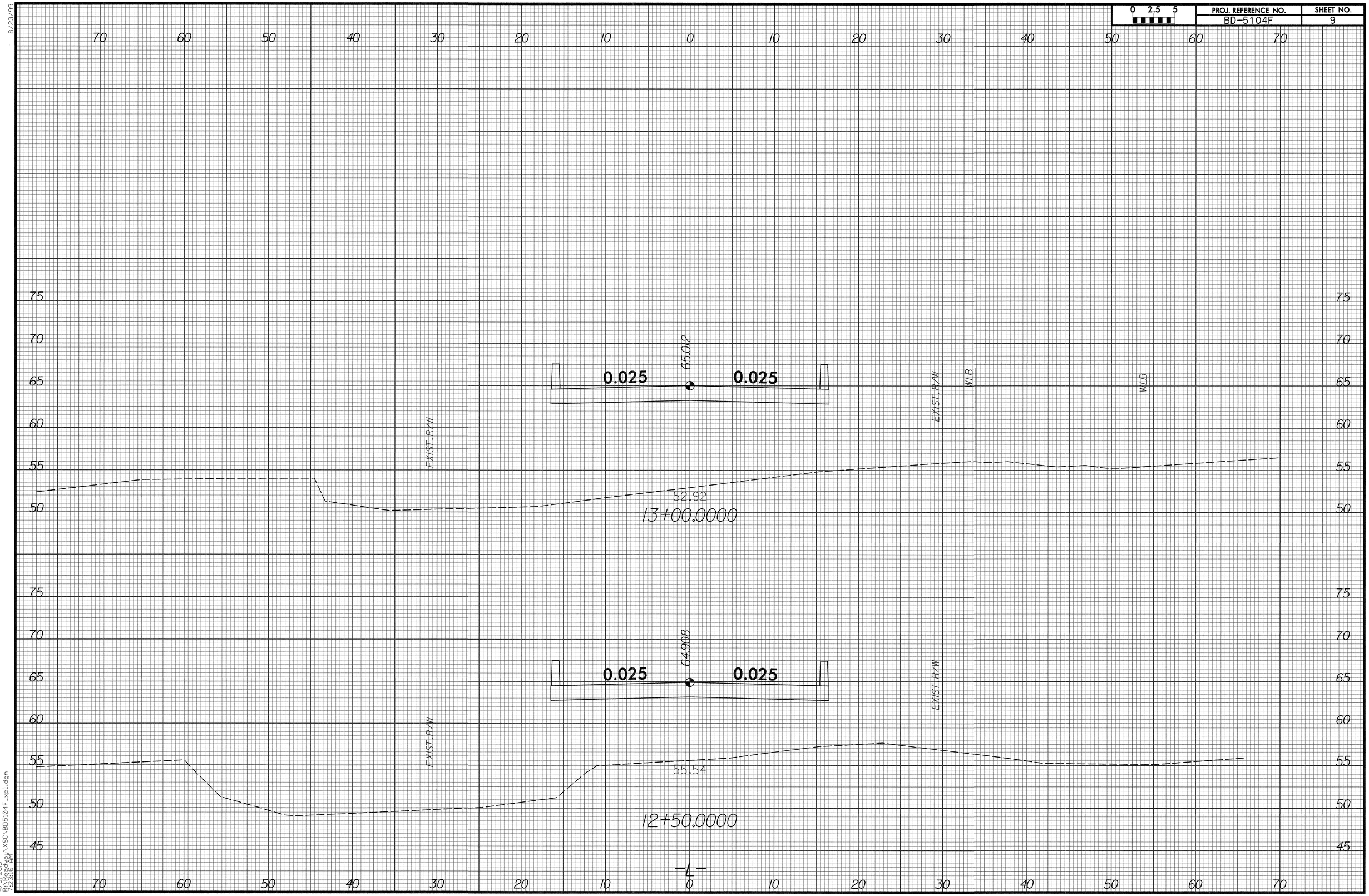

8/23/99
4/3/2013
9:23:30 AM
Rudy
\XSC\BD5104F_xp1.dgn

0 2.5 5	PROJ. REFERENCE NO.	SHEET NO.
	BD-5104F	10

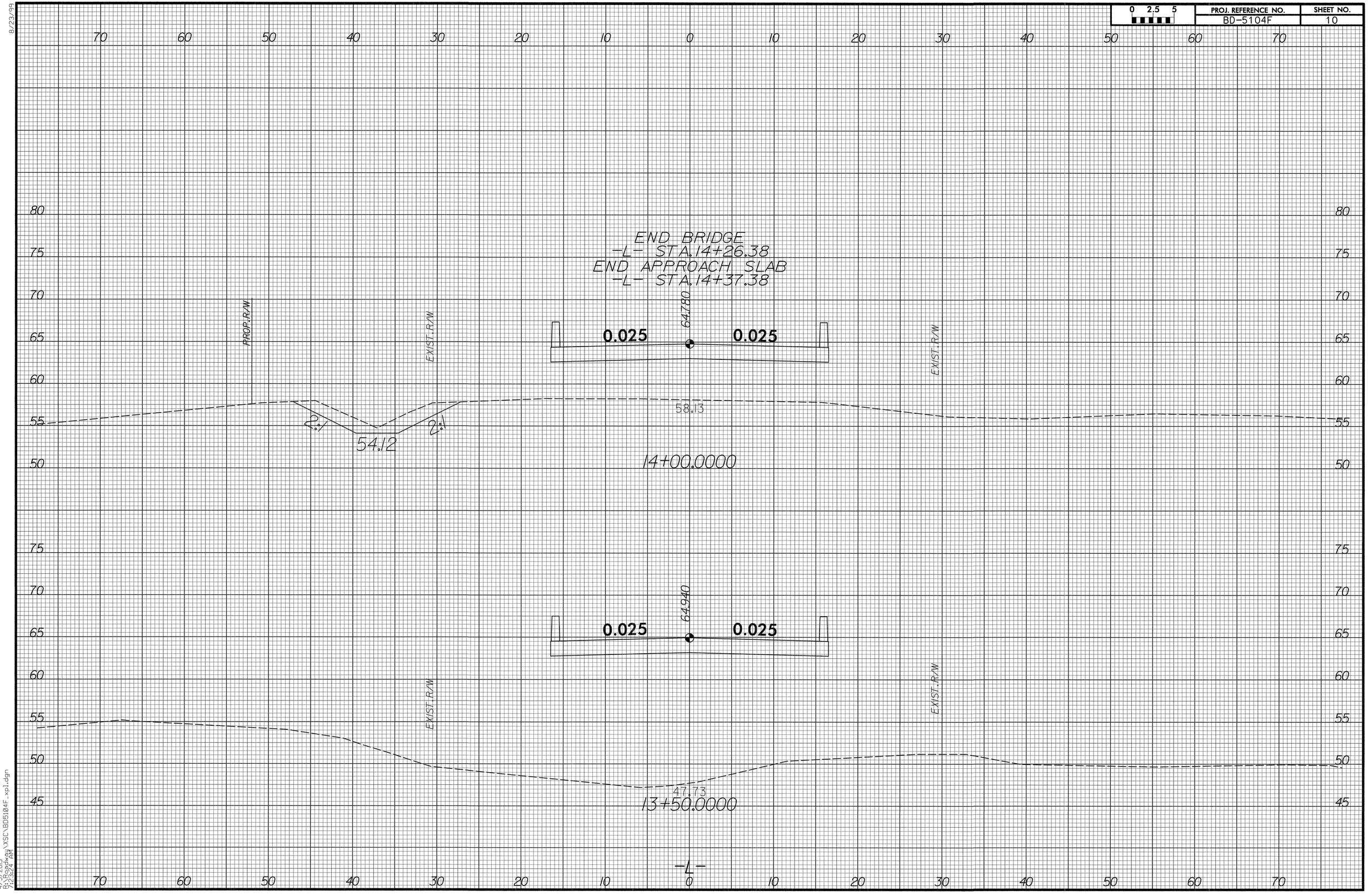

8/23/99

4/3/2013
9:23:52 AM
...\XSC\BD5104F_xp1.dgn

0 2.5 5	PROJ. REFERENCE NO.	SHEET NO.
	BD-5104F	11

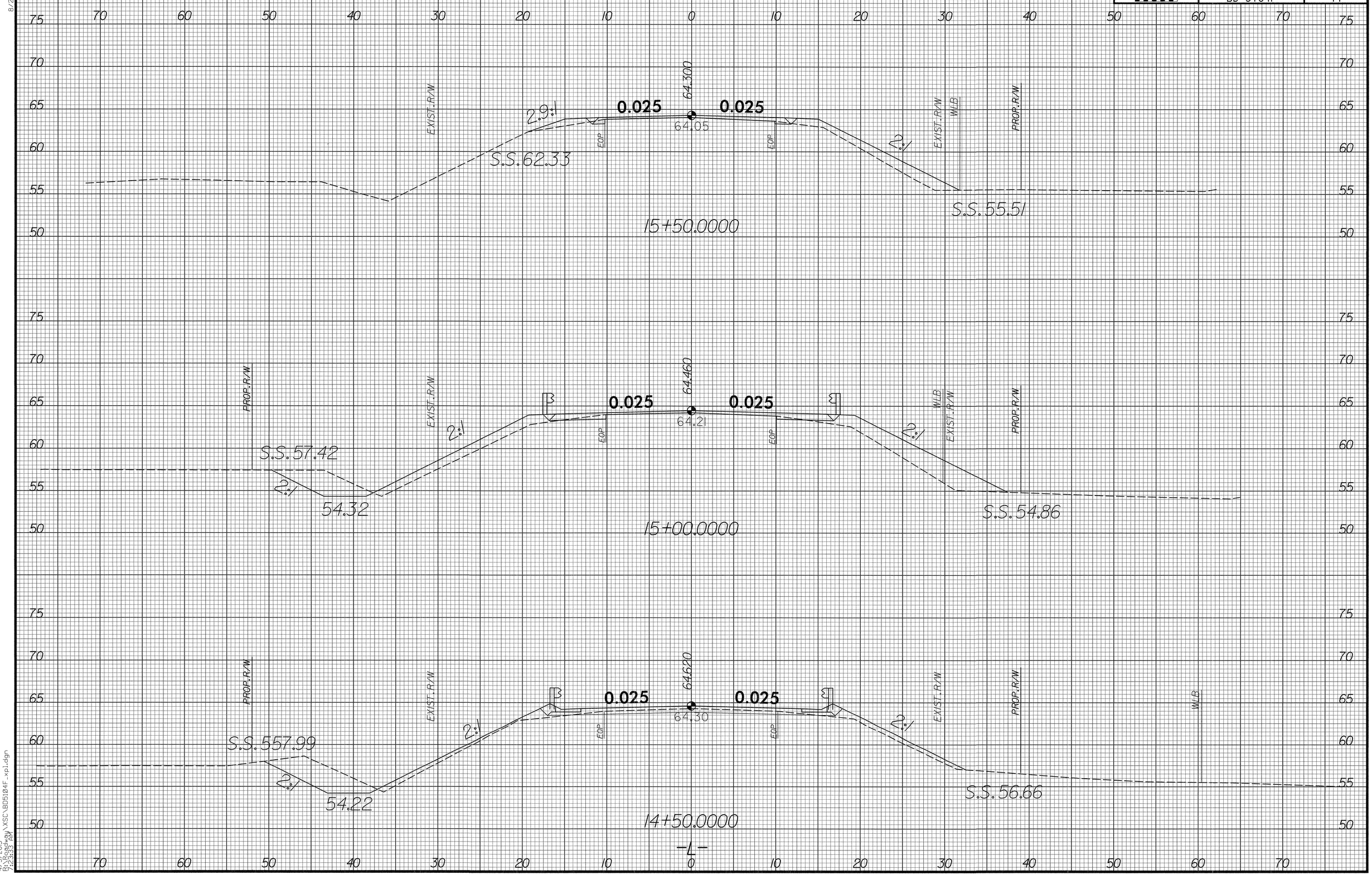

8/23/99

4/3/2013
9:23:33 AM
pw:\\xsc\BD5104F_xpl.dgn

0 2.5 5	PROJ. REFERENCE NO.	SHEET NO.
	BD-5104F	12

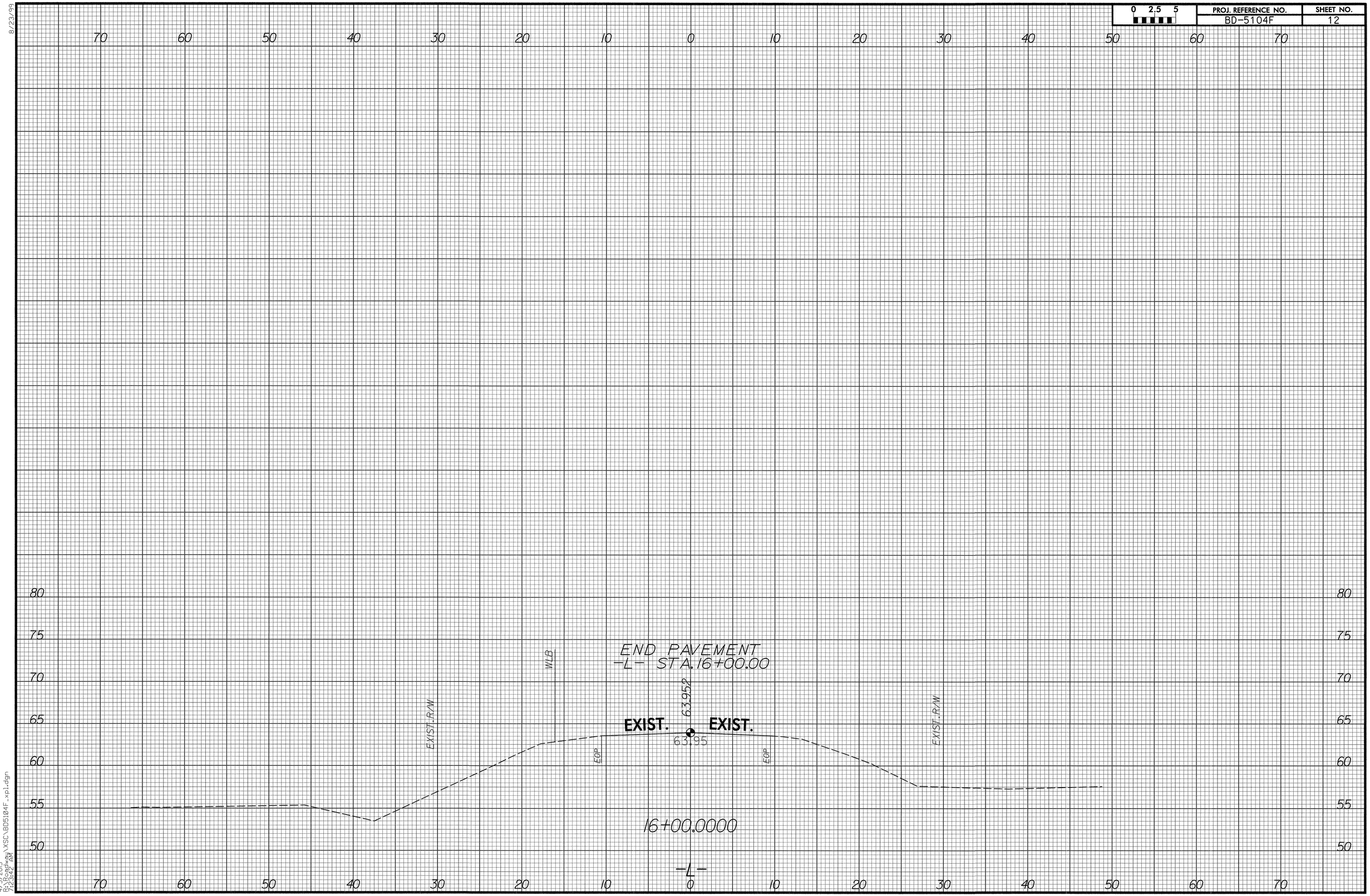

8/23/99

4/3/2013
12:23:29 PM
pw:\\pwpa\XSC\BD5104F_xpl.dgn

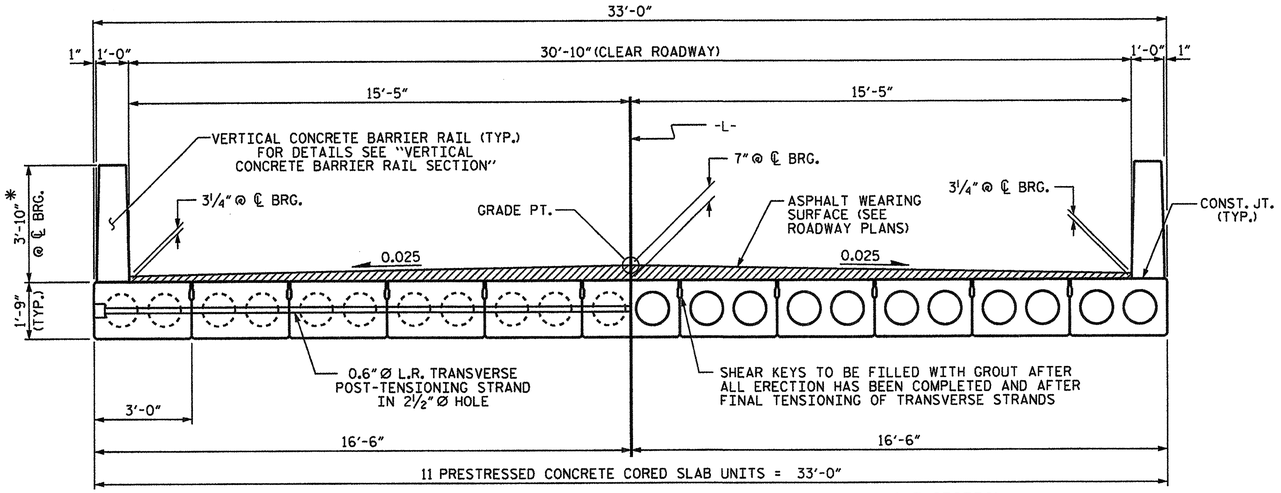

HALF SECTION
AT INTERMEDIATE DIAPHRAGMS

HALF SECTION
THROUGH VOIDS

TYPICAL SECTION

* - THE MAXIMUM BARRIER RAIL HEIGHT AND ASPHALT THICKNESS IS SHOWN. THE HEIGHT OF THE BARRIER RAIL AND ASPHALT THICKNESS VARIES WHILE THE TOP OF THE BARRIER RAIL FOLLOWS THE PROFILE OF THE GUTTERLINE. FOR RAIL HEIGHT DETAILS AND ASPHALT THICKNESS SEE THE "VERTICAL CONCRETE BARRIER RAIL SECTION" DETAIL.

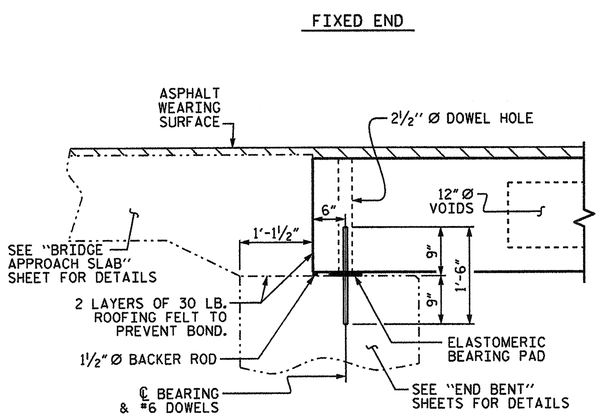

SECTION AT END BENT

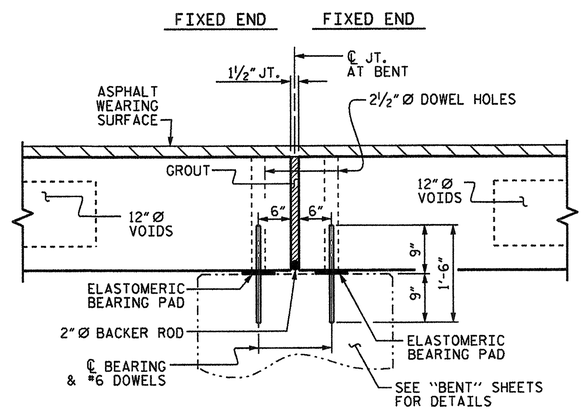

SECTION AT BENT

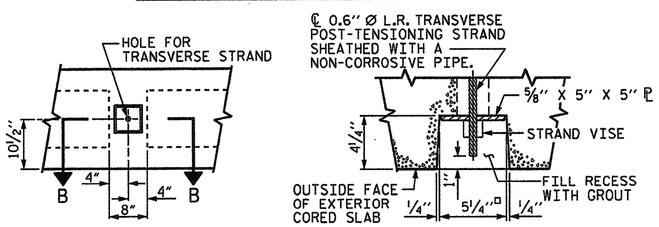

ELEVATION VIEW

SECTION B-B

GROUTED RECESS AT END OF POST-TENSIONED STRAND OF CORED SLABS

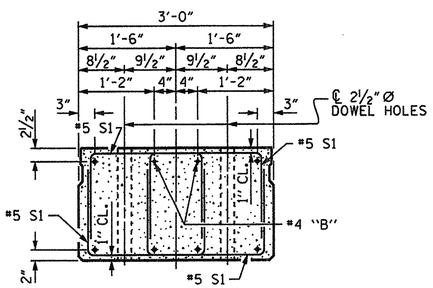

END ELEVATION

SHOWING PLACEMENT OF DOUBLE STIRRUPS AND LOCATION OF DOWEL HOLES. (STRAND LAYOUT NOT SHOWN.) INTERIOR SLAB UNIT SHOWN-EXTERIOR SLAB UNIT SIMILAR EXCEPT SHEAR KEY LOCATION.

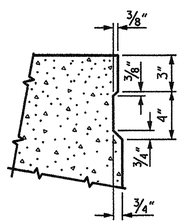

SHEAR KEY DETAIL

NOTE: OMIT SHEAR KEY ON OUTSIDE FACE OF EXTERIOR CORED SLABS.

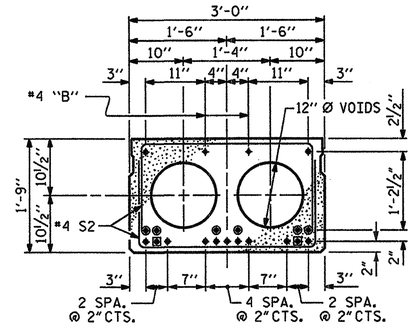

INTERIOR SLAB SECTION
(45' UNIT)
(13 STRANDS REQUIRED)

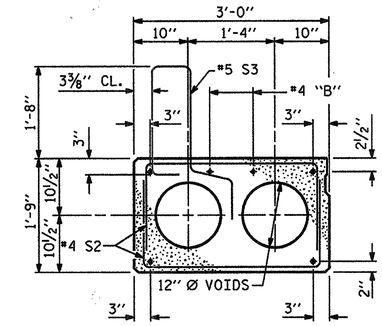

EXT. SLAB SECTION

(FOR PRESTRESSED STRAND LAYOUT, SEE INTERIOR SLAB SECTION.)

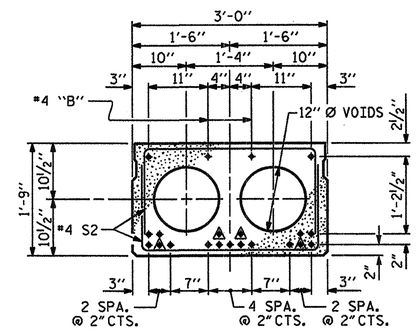

INTERIOR SLAB SECTION
(50' & 55' UNIT)
(19 STRANDS REQUIRED)

0.6" Ø LOW RELAXATION STRAND LAYOUT

▲ BOND SHALL BE BROKEN ON THESE STRANDS FOR A DISTANCE OF 6'-0" FROM END OF CORED SLAB UNIT. SEE STANDARD SPECIFICATIONS, ARTICLE 1078-7.

▣ BOND SHALL BE BROKEN ON THESE STRANDS FOR A DISTANCE OF 2'-0" FROM END OF CORED SLAB UNIT. SEE STANDARD SPECIFICATIONS, ARTICLE 1078-7.

◉ OPTIONAL FULL LENGTH DEBONDED STRANDS. THESE STRANDS ARE NOT REQUIRED. IF THE FABRICATOR CHOOSES TO INCLUDE THESE STRANDS IN THE CORED SLAB UNIT, THE STRANDS SHALL BE DEBONDED FOR THE FULL LENGTH OF THE UNIT AT NO ADDITIONAL COST. SEE STANDARD SPECIFICATIONS, ARTICLE 1078-7.

DEBONDING LEGEND

PROJECT NO. BD-5104F
WILSON COUNTY
STATION: 13+00.00 -L-

SHEET 1 OF 6

STATE OF NORTH CAROLINA
DEPARTMENT OF TRANSPORTATION
RALEIGH

STANDARD
3'-0" X 1'-9"
PRESTRESSED CONCRETE
CORED SLAB UNIT
90° SKEW

NORTH CAROLINA PROFESSIONAL SEAL 14045 ENGINEER TIMOTHY W. COCKING
03/06/13

REVISIONS								SHEET NO.
NO.	BY:	DATE:	NO.	BY:	DATE:			13
1			3					TOTAL SHEETS
2			4					35

ASSEMBLED BY : N. RUFFIN		DATE : 1/11/13	
CHECKED BY : M. AHMED		DATE : 2/26/13	
DRAWN BY : DGE	5/09	REV. 12/11	MAA/AAC
CHECKED BY : BCH	6/09		

08-MAR-2013 14:07
S:\DPGI\Tim\Division 4 LIBR\BD-5104F\BD5104F_sm_Draft_standards_01.dgn
druffin

STD. NO. 21" PCS2_33_90S

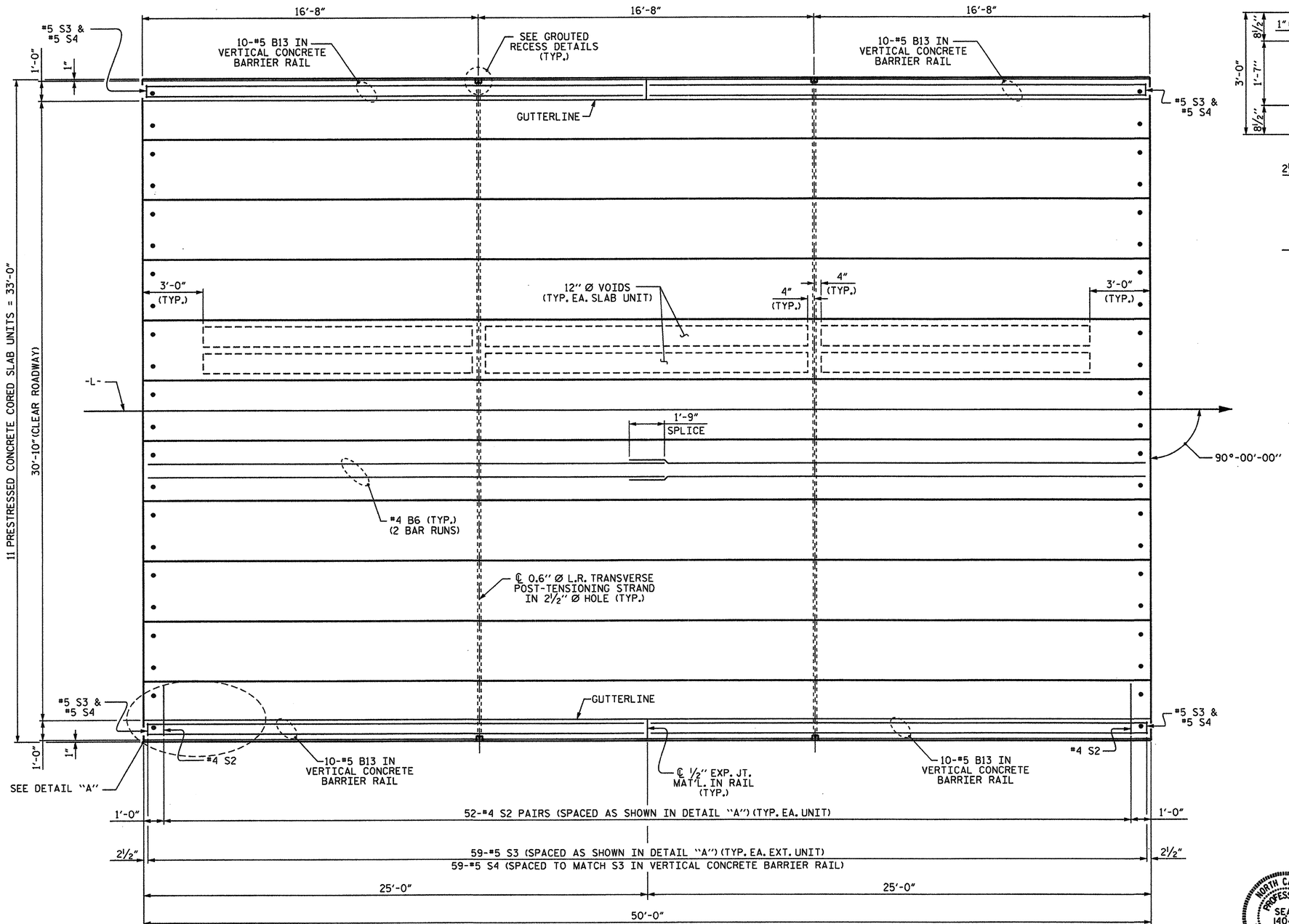

PLAN OF UNIT

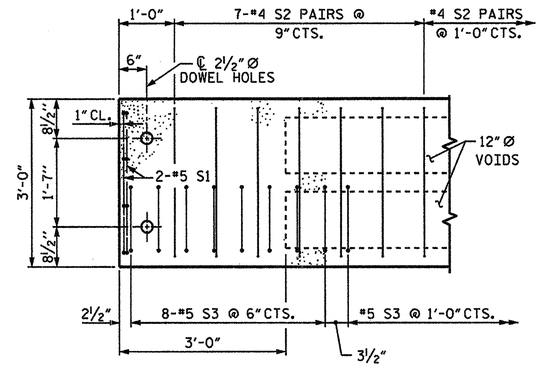

DETAIL "A"

NOTE: EXTERIOR UNIT SHOWN - INTERIOR UNIT SIMILAR EXCEPT OMIT #5 S3 BARS.

PROJECT NO. BD-5104F

WILSON COUNTY

STATION: 13+00.00 -L-

SHEET 2 OF 6

STATE OF NORTH CAROLINA
DEPARTMENT OF TRANSPORTATION
RALEIGH

PLAN OF 50' UNIT
30'-10" CLEAR ROADWAY
90° SKEW

NORTH CAROLINA PROFESSIONAL SEAL 14045 ENGINEER TIMOTHY W. COGGINS
03/08/13

ASSEMBLED BY : N. RUFFIN	DATE : 1/11/13		
CHECKED BY : M. AHMED	DATE : 2/26/13		
DRAWN BY : DGE 3/09	REV. 12/5/11 MAA/AAC		
CHECKED BY : BCH 3/09			

REVISIONS						SHEET NO.
NO.	BY:	DATE:	NO.	BY:	DATE:	14
1			3			TOTAL SHEETS
2			4			35

08-MAR-2013 14:07
S:\DPG1\Tim\Division 4 LIBR\BD-5104F\BD5104F_sm_Draft_standards_01.dgn
nruffin

STD. NO. 21" PCS_33_90S_50L

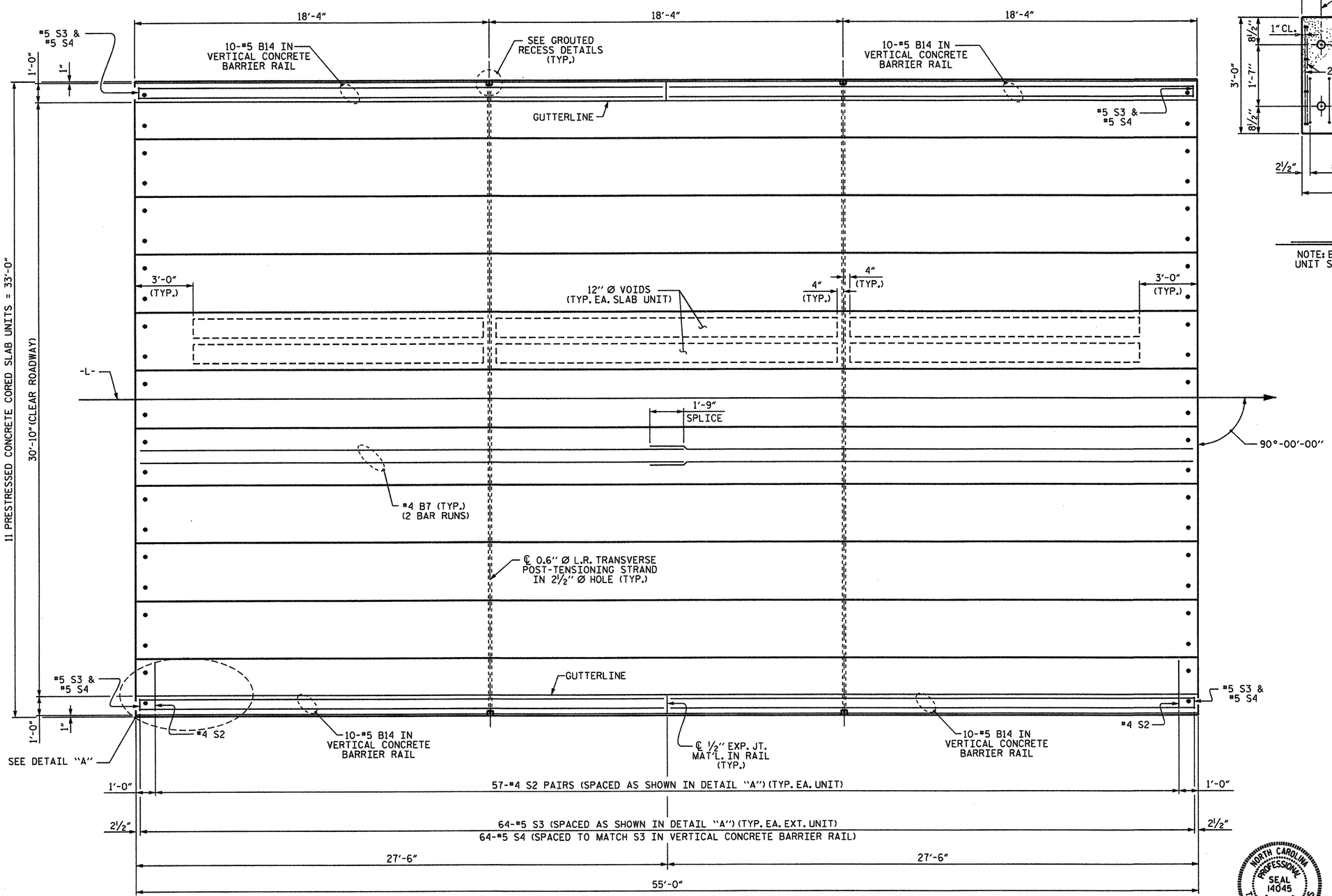

PLAN OF UNIT

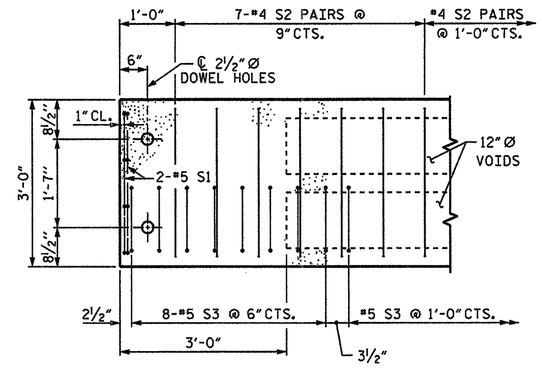

DETAIL "A"

NOTE: EXTERIOR UNIT SHOWN - INTERIOR UNIT SIMILAR EXCEPT OMIT #5 S3 BARS.

PROJECT NO. BD-5104F

WILSON COUNTY

STATION: 13+00.00 -L-

SHEET 3 OF 6

STATE OF NORTH CAROLINA
DEPARTMENT OF TRANSPORTATION
RALEIGH

PLAN OF 55' UNIT
30'-10" CLEAR ROADWAY
90° SKEW

NORTH CAROLINA PROFESSIONAL SEAL 14045 ENGINEER TIMOTHY G. COGGINS
03/08/13

ASSEMBLED BY : N. RUFFIN	DATE : 1/11/13
CHECKED BY : M. AHMED	DATE : 2/26/13
DRAWN BY : DGE 3/09	REV. 12/5/11 MAA/AAC
CHECKED BY : BCH 3/09	

REVISIONS								SHEET NO.
NO.	BY:	DATE:	NO.	BY:	DATE:			15
1			3					TOTAL SHEETS
2			4					35

08-MAR-2013 14:06
S:\DPG1\Tlm\Division 4 LIBR\BD-5104F\BD5104F_sm_Draft_standards_01.dgn
ruffin

STD. NO. 21" PCS_33_90S_55L

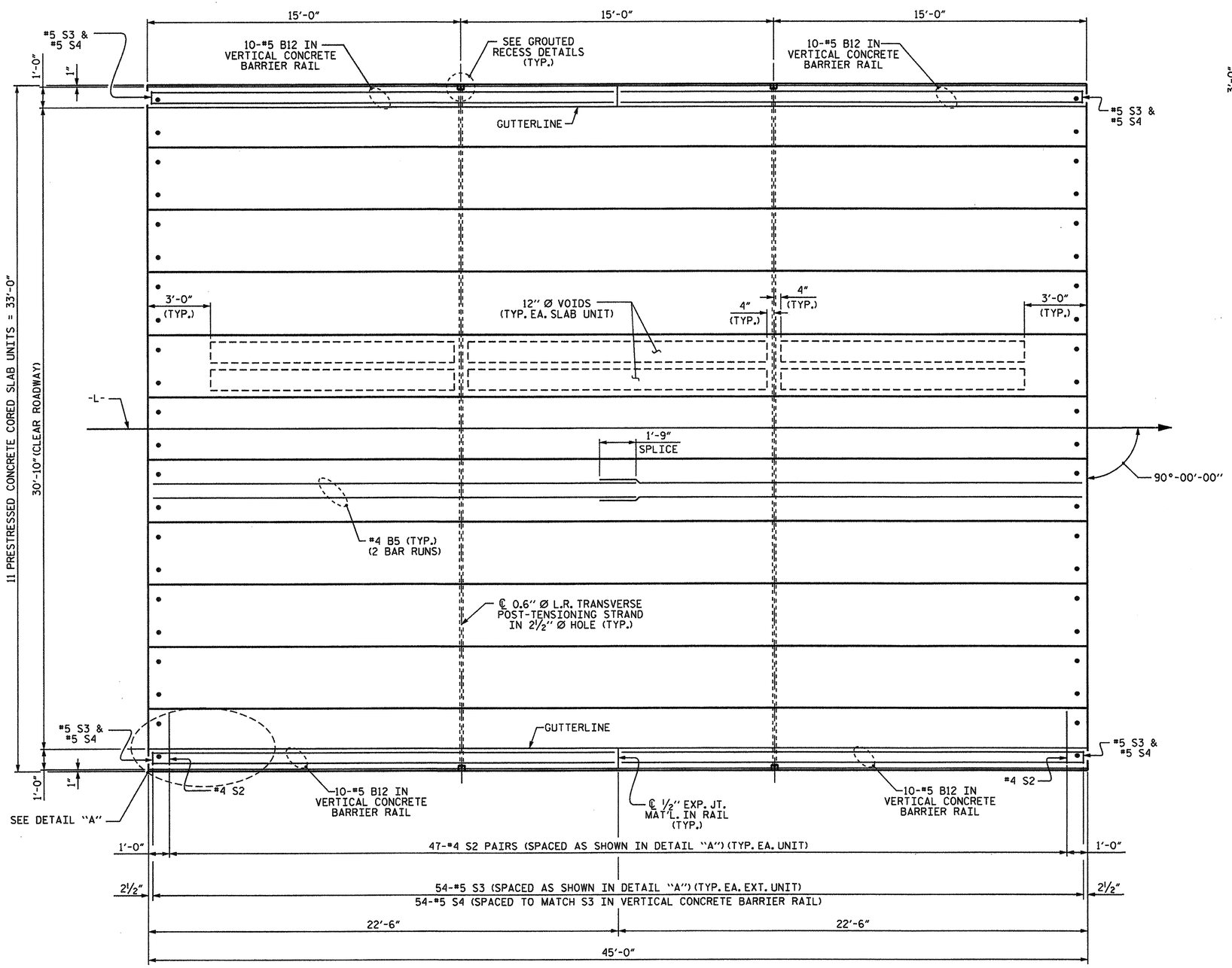

PLAN OF UNIT

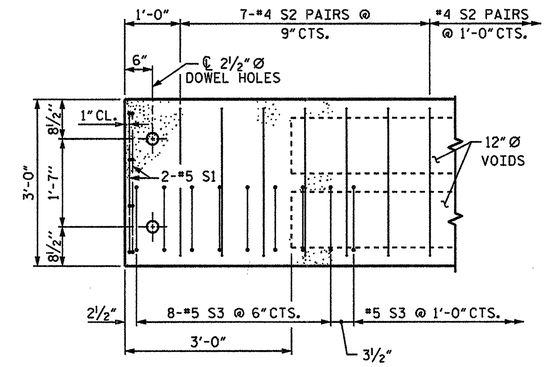

DETAIL "A"

NOTE: EXTERIOR UNIT SHOWN - INTERIOR UNIT SIMILAR EXCEPT OMIT #5 S3 BARS.

PROJECT NO. BD-5104F

WILSON COUNTY

STATION: 13+00.00 -L-

SHEET 4 OF 6

STATE OF NORTH CAROLINA
DEPARTMENT OF TRANSPORTATION
RALEIGH

PLAN OF 45' UNIT 30'-10" CLEAR ROADWAY 90° SKEW

NORTH CAROLINA PROFESSIONAL SEAL 14045 ENGINEER TIMOTHY A. COGGINS
03/08/13

ASSEMBLED BY : N. RUFFIN	DATE : 1/11/13		
CHECKED BY : M. AHMED	DATE : 2/26/13		
DRAWN BY : DGE 3/09	REV. 12/5/11 MAA/AAC		
CHECKED BY : BCH 3/09			

REVISIONS						SHEET NO.
NO.	BY:	DATE:	NO.	BY:	DATE:	16
1			3			TOTAL SHEETS
2			4			35

08-MAR-2013 14:06
S:\DPG1\Tim\Division 4 LIBR\BD-5104F\BD5104F_sm_Draft_standards_01.dgn
nruffin

STD. NO. 21" PCS_33_90S_45L

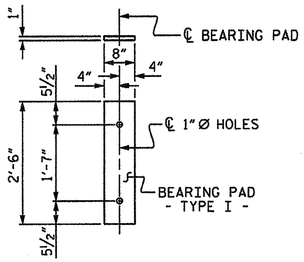

FIXED END
(TYPE I - 110 REQ'D)

ELASTOMERIC BEARING DETAILS

ELASTOMER IN ALL BEARINGS SHALL BE 50 DUROMETER HARDNESS.

CORED SLABS REQUIRED			
	NUMBER	LENGTH	TOTAL LENGTH
45' UNIT			
EXTERIOR C.S.	2	45'-0"	90'-0"
INTERIOR C.S.	9	45'-0"	405'-0"
TOTAL	11	45'-0"	495'-0"

CORED SLABS REQUIRED			
	NUMBER	LENGTH	TOTAL LENGTH
50' UNIT			
EXTERIOR C.S.	6	50'-0"	300'-0"
INTERIOR C.S.	27	50'-0"	1350'-0"
TOTAL	33	50'-0"	1650'-0"

CORED SLABS REQUIRED			
	NUMBER	LENGTH	TOTAL LENGTH
55' UNIT			
EXTERIOR C.S.	2	55'-0"	110'-0"
INTERIOR C.S.	9	55'-0"	495'-0"
TOTAL	11	55'-0"	605'-0"

BAR TYPES

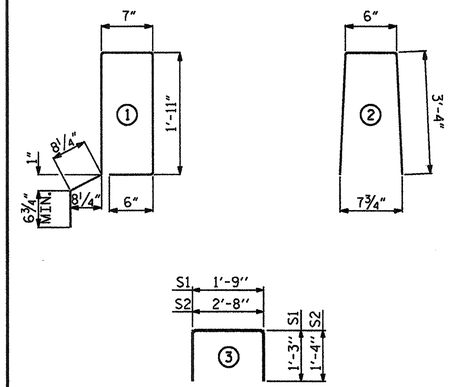

ALL BAR DIMENSIONS ARE OUT TO OUT

NOTES

ALL PRESTRESSING STRANDS SHALL BE 7-WIRE LOW RELAXATION GRADE 270 STRANDS AND SHALL CONFORM TO AASHTO M203 EXCEPT FOR SAMPLING REQUIREMENTS WHICH SHALL BE IN ACCORDANCE WITH THE STANDARD SPECIFICATIONS.

ALL REINFORCING STEEL CAST WITH THE CORED SLAB SECTIONS SHALL BE GRADE 60 AND SHALL BE INCLUDED IN THE UNIT PRICE BID FOR PRESTRESSED CONCRETE CORED SLABS.

RECESSES FOR TRANSVERSE STRANDS SHALL BE GROUTED AFTER THE TENSIONING OF THE STRANDS.

THE 2½"Ø DOWEL HOLES AT FIXED ENDS OF SLAB SECTIONS SHALL BE FILLED WITH NON-SHRINK GROUT.

THE BACKER RODS SHALL CONFORM TO THE REQUIREMENTS OF TYPE M BOND BREAKER. SEE SECTION 1028 OF THE STANDARD SPECIFICATIONS.

WHEN CORED SLABS ARE CAST, AN INTERNAL HOLD-DOWN SYSTEM SHALL BE EMPLOYED TO PREVENT VOIDS FROM RISING OR MOVING SIDEWAYS. AT LEAST SIX WEEKS PRIOR TO CASTING CORED SLABS, THE CONTRACTOR SHALL SUBMIT TO THE ENGINEER FOR REVIEW AND COMMENT, DETAILED DRAWINGS OF THE PROPOSED HOLD-DOWN SYSTEM. IN ADDITION TO STRUCTURAL DETAILS, LOCATION AND SPACING OF THE HOLD-DOWNS SHALL BE INDICATED.

ALL REINFORCING STEEL IN THE VERTICAL CONCRETE BARRIER RAIL SHALL BE EPOXY COATED.

PRESTRESSING STRANDS SHALL BE CUT FLUSH WITH THE CORED SLAB UNIT ENDS.

APPLY EPOXY PROTECTIVE COATING TO CORED SLAB UNIT ENDS.

GROOVED CONTRACTION JOINTS, ½" IN DEPTH, SHALL BE TOOLED IN ALL EXPOSED FACES OF THE BARRIER RAIL AND IN ACCORDANCE WITH ARTICLE 825-10(B) OF THE STANDARD SPECIFICATIONS. A CONTRACTION JOINT SHALL BE LOCATED AT EACH THIRD POINT BETWEEN BARRIER RAIL EXPANSION JOINTS. ONLY ONE CONTRACTION JOINT IS REQUIRED AT MIDPOINT OF BARRIER RAIL SEGMENTS LESS THAN 20 FEET IN LENGTH AND NO CONTRACTION JOINTS ARE REQUIRED FOR THOSE SEGMENTS LESS THAN 10 FEET IN LENGTH.

TRANSVERSE POST TENSIONING OF THE CORED SLAB UNITS SHALL BE DONE IN ACCORDANCE WITH THE STANDARD SPECIFICATIONS.

THE TRANSFER OF LOAD FROM THE ANCHORAGES TO THE CORED SLAB UNIT SHALL BE DONE WHEN THE CONCRETE HAS REACHED A COMPRESSIVE STRENGTH OF NOT LESS THAN THE REQUIRED STRENGTH SHOWN IN THE "CONCRETE RELEASE STRENGTH" TABLE.

FOR GROUT FOR STRUCTURES, SEE SPECIAL PROVISIONS.

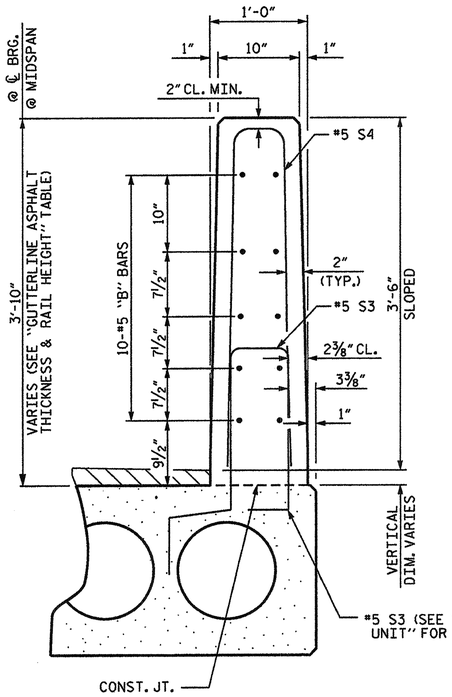

VERTICAL CONCRETE BARRIER RAIL SECTION

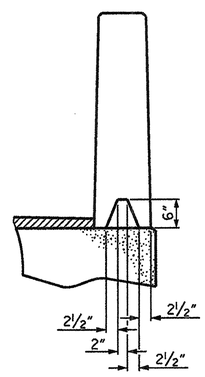

SECTION S-S
AT DAM IN OPEN JOINT
(THIS IS TO BE USED ONLY WHEN SLIP FORM IS USED)

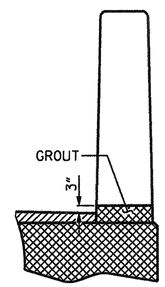

SECTION T-T
AT OPEN JOINT AT BENT
(THIS IS TO BE USED WHERE FOAM JOINT IS NOT USED)

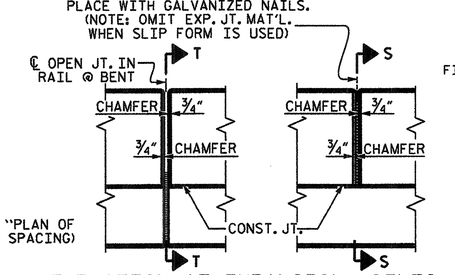

ELEVATION AT EXPANSION JOINTS

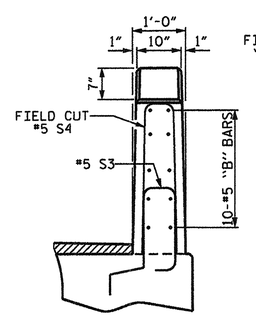

END VIEW

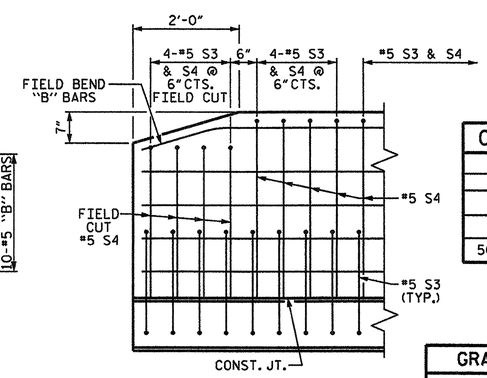

SIDE VIEW

END OF RAIL DETAILS

CONCRETE RELEASE STRENGTH	
UNIT	PSI
45' UNITS	4000
50' & 55' UNITS	4900

GRADE 270 STRANDS	
	0.6"Ø L.R.
AREA (SQUARE INCHES)	0.217
ULTIMATE STRENGTH (LBS. PER STRAND)	58,600
APPLIED PRESTRESS (LBS. PER STRAND)	43,950

NORTH CAROLINA PROFESSIONAL SEAL 14045 ENGINEER TIMOTHY L. COGGINS
Timothy L. Coggins 03/08/13

PROJECT NO. BD-5104F
WILSON COUNTY
STATION: 13+00.00 -L-

SHEET 5 OF 6

STATE OF NORTH CAROLINA
DEPARTMENT OF TRANSPORTATION
RALEIGH

STANDARD
3'-0" X 1'-9"
PRESTRESSED CONCRETE
CORED SLAB UNIT
90° SKEW

ASSEMBLED BY : N. RUFFIN	DATE : 1/11/13
CHECKED BY : M. AHMED	DATE : 2/28/13
DRAWN BY : DGE 5/09	REV. 12/11 MAA/AAC
CHECKED BY : BCH 6/09	

REVISIONS								SHEET NO.
NO.	BY:	DATE:	NO.	BY:	DATE:			17
1			3					TOTAL SHEETS
2			4					35

08-MAR-2013 14:06
S:\DFG1\Tim\Division 4 LIBR\BD-5104F\BD5104F_sm_Draft_standards_01.dgn
nruffin

STD. NO. 21"PCS3_33_90S

BILL OF MATERIAL FOR VERTICAL CONCRETE BARRIER RAIL

BAR	BARS PER PAIR OF EXTERIOR UNITS	TOTAL NO.	SIZE	TYPE	LENGTH	WEIGHT
	45' UNIT					
✻B12	40	40	#5	STR	22'-1"	921
✻ S4	108	108	#5	2	7'-2"	807
✻ EPOXY COATED REINFORCING STEEL				LBS.		1728
CLASS AA CONCRETE				CU.YDS.		11.8
TOTAL VERTICAL CONCRETE BARRIER RAIL				LN. FT.		90.13

BILL OF MATERIAL FOR VERTICAL CONCRETE BARRIER RAIL

BAR	BARS PER PAIR OF EXTERIOR UNITS	TOTAL NO.	SIZE	TYPE	LENGTH	WEIGHT
	50' UNIT					
✻B13	40	120	#5	STR	24'-7"	3077
✻ S4	118	354	#5	2	7'-2"	2646
✻ EPOXY COATED REINFORCING STEEL				LBS.		5723
CLASS AA CONCRETE				CU.YDS.		39.3
TOTAL VERTICAL CONCRETE BARRIER RAIL				LN. FT.		300.62

BILL OF MATERIAL FOR VERTICAL CONCRETE BARRIER RAIL

BAR	BARS PER PAIR OF EXTERIOR UNITS	TOTAL NO.	SIZE	TYPE	LENGTH	WEIGHT
	55' UNIT					
✻B14	40	40	#5	STR	27'-1"	1130
✻ S4	128	128	#5	2	7'-2"	957
✻ EPOXY COATED REINFORCING STEEL				LBS.		2087
CLASS AA CONCRETE				CU.YDS.		14.4
TOTAL VERTICAL CONCRETE BARRIER RAIL				LN. FT.		110.25

DEAD LOAD DEFLECTION AND CAMBER

	3'-0" x 1'-9"
45' CORED SLAB UNIT	0.6" Ø L.R. STRAND
CAMBER (SLAB ALONE IN PLACE)	1¼" ↑
DEFLECTION DUE TO SUPERIMPOSED DEAD LOAD✻✻	⅛" ↓
FINAL CAMBER	1⅛" ↑

✻✻ INCLUDES FUTURE WEARING SURFACE

DEAD LOAD DEFLECTION AND CAMBER

	3'-0" x 1'-9"
50' & 55' CORED SLAB UNIT	0.6" Ø L.R. STRAND
CAMBER (SLAB ALONE IN PLACE)	2½" ↑
DEFLECTION DUE TO SUPERIMPOSED DEAD LOAD✻✻	¼" ↓
FINAL CAMBER	2¼" ↑

✻✻ INCLUDES FUTURE WEARING SURFACE

BILL OF MATERIAL FOR ONE 45' CORED SLAB UNIT

				EXTERIOR UNIT		INTERIOR UNIT	
BAR	NUMBER	SIZE	TYPE	LENGTH	WEIGHT	LENGTH	WEIGHT
B5	4	#4	STR	23'-3"	62	23'-3"	62
S1	8	#5	3	4'-3"	35	4'-3"	35
S2	94	#4	3	5'-4"	335	5'-4"	335
✻ S3	54	#5	1	6'-2"	347		
REINFORCING STEEL			LBS.		432		432
✻ EPOXY COATED REINFORCING STEEL			LBS.		347		
6500 P.S.I. CONCRETE			CU. YDS.		6.5		6.5
0.6" Ø L.R. STRANDS			No.		13		13

BILL OF MATERIAL FOR ONE 50' CORED SLAB UNIT

				EXTERIOR UNIT		INTERIOR UNIT	
BAR	NUMBER	SIZE	TYPE	LENGTH	WEIGHT	LENGTH	WEIGHT
B6	4	#4	STR	25'-9"	69	25'-9"	69
S1	8	#5	3	4'-3"	35	4'-3"	35
S2	104	#4	3	5'-4"	371	5'-4"	371
✻ S3	59	#5	1	6'-2"	379		
REINFORCING STEEL			LBS.		475		475
✻ EPOXY COATED REINFORCING STEEL			LBS.		379		
6500 P.S.I. CONCRETE			CU. YDS.		7.1		7.1
0.6" Ø L.R. STRANDS			No.		19		19

BILL OF MATERIAL FOR ONE 55' CORED SLAB UNIT

				EXTERIOR UNIT		INTERIOR UNIT	
BAR	NUMBER	SIZE	TYPE	LENGTH	WEIGHT	LENGTH	WEIGHT
B7	4	#4	STR	28'-3"	75	28'-3"	75
S1	8	#5	3	4'-3"	35	4'-3"	35
S2	114	#4	3	5'-4"	406	5'-4"	406
✻ S3	64	#5	1	6'-2"	412		
REINFORCING STEEL			LBS.		516		516
✻ EPOXY COATED REINFORCING STEEL			LBS.		412		
6500 P.S.I. CONCRETE			CU. YDS.		7.8		7.8
0.6" Ø L.R. STRANDS			No.		19		19

GUTTERLINE ASPHALT THICKNESS & RAIL HEIGHT

30'-10" CLEAR ROADWAY	ASPHALT OVERLAY THICKNESS	RAIL HEIGHT
	@ MID-SPAN	@ MID-SPAN
	NORMAL CROWN SECTION	
45' UNITS	2⅛"	3'-8⅞"
50' & 55' UNITS	1"	3'-7¾"

PROJECT NO. BD-5104F

WILSON COUNTY

STATION: 13+00.00 -L-

SHEET 6 OF 6

STATE OF NORTH CAROLINA
DEPARTMENT OF TRANSPORTATION
RALEIGH

MISC. INFO. FOR 33' WIDTH CORED SLAB UNIT 90° SKEW

NORTH CAROLINA PROFESSIONAL SEAL 14045 ENGINEER TIMOTHY W. CORSONS

03/08/13

REVISIONS						SHEET NO.
NO.	BY:	DATE:	NO.	BY:	DATE:	18
1			3			TOTAL SHEETS
2			4			35

ASSEMBLED BY :	N. RUFFIN	DATE :	1/11/13
CHECKED BY :	M. AHMED	DATE :	2/28/13
DRAWN BY : DGE 5/09	REV. 12/11	MAA/AAC	
CHECKED BY : BCH 6/09			

STD. NO. 21" BOM INFO_33_90S

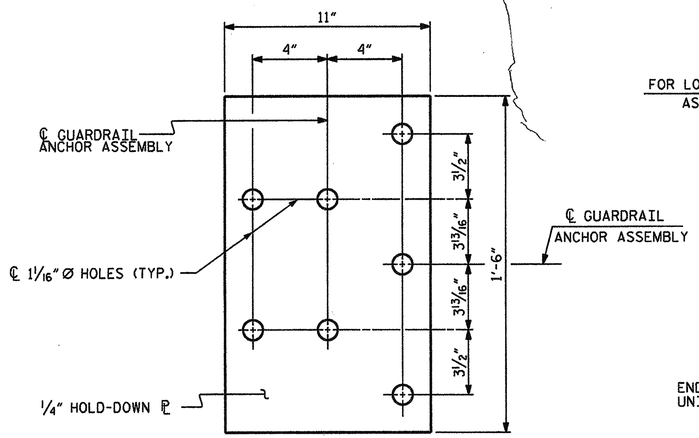

PLAN

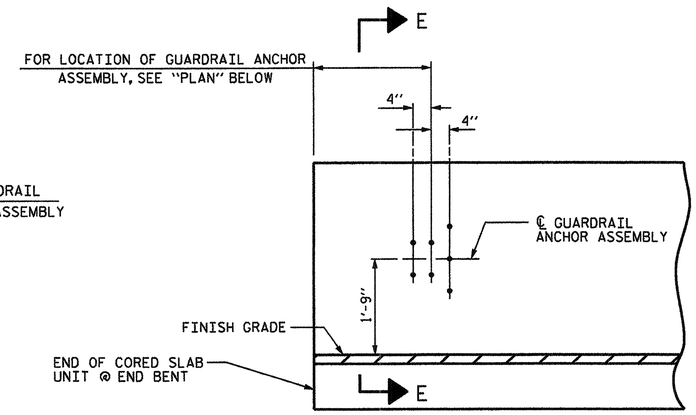

ELEVATION

NOTES

THE GUARDRAIL ANCHOR ASSEMBLY SHALL CONSIST OF A 1/4" HOLD DOWN PLATE AND 7 - 7/8" Ø BOLTS WITH NUTS AND WASHERS.

THE HOLD-DOWN PLATE SHALL CONFORM TO AASHTO M270 GRADE 36. AFTER FABRICATION, THE HOLD-DOWN PLATE SHALL BE HOT-DIP GALVANIZED IN ACCORDANCE WITH AASHTO M111.

BOLTS SHALL CONFORM TO THE REQUIREMENTS OF ASTM A307 AND NUTS SHALL CONFORM TO THE REQUIREMENTS OF AASHTO M291. BOLTS, NUTS AND WASHERS SHALL BE GALVANIZED. (AT THE CONTRACTOR'S OPTION, STAINLESS STEEL BOLTS, NUTS AND WASHERS MAY BE USED AS AN ALTERNATE FOR THE 7/8" Ø GALVANIZED BOLTS, NUTS AND WASHERS. THEY SHALL CONFORM TO OR EXCEED THE MECHANICAL REQUIREMENTS OF ASTM A307. THE USE OF THIS ALTERNATE SHALL BE APPROVED BY THE ENGINEER.)

THE GUARDRAIL ANCHOR ASSEMBLY IS REQUIRED AT ALL POINTS WHERE APPROACH GUARDRAIL IS TO BE ATTACHED TO THE END OF BARRIER RAIL. FOR POINTS OF ATTACHMENT, SEE SKETCH.

AFTER INSTALLATION, THE EXPOSED THREAD OF THE BOLT SHALL BE BURRED WITH A SHARP POINTED TOOL.

THE COST OF THE GUARDRAIL ANCHOR ASSEMBLY SHALL BE INCLUDED IN THE UNIT CONTRACT PRICE BID FOR VERTICAL CONCRETE BARRIER RAIL.

THE VERTICAL REINFORCING BARS MAY BE SHIFTED SLIGHTLY IN THE VERTICAL CONCRETE BARRIER RAIL TO CLEAR ASSEMBLY BOLTS.

THE 1 1/4" Ø HOLES SHALL BE FORMED OR DRILLED WITH A CORE BIT. IMPACT TOOLS WILL NOT BE PERMITTED. ANY CONCRETE DAMAGED BY THIS WORK SHALL BE REPAIRED TO THE SATISFACTION OF THE ENGINEER.

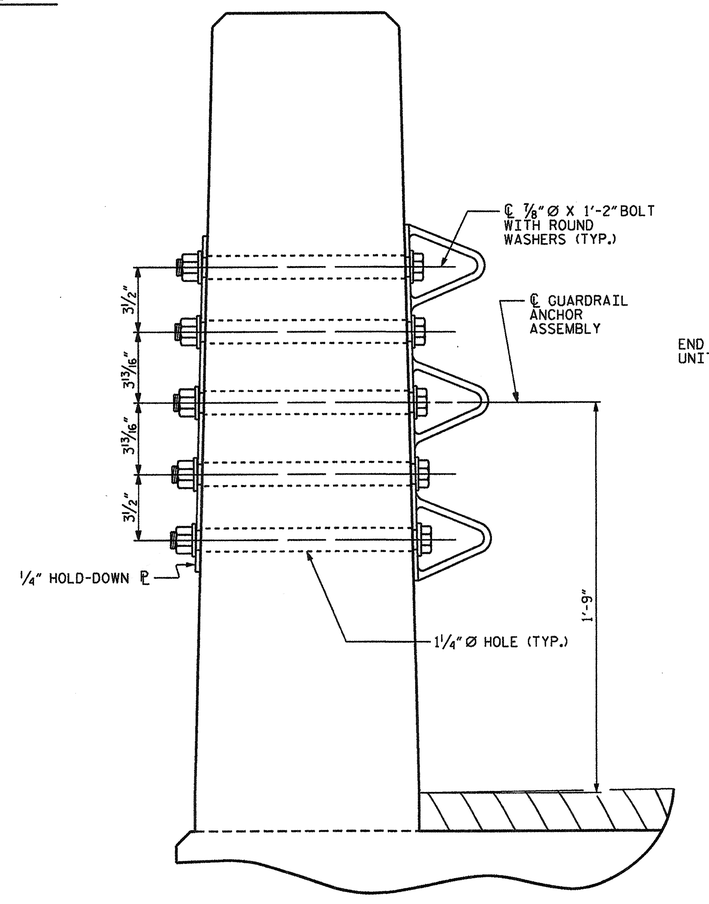

SECTION E-E

GUARDRAIL ANCHOR ASSEMBLY DETAILS

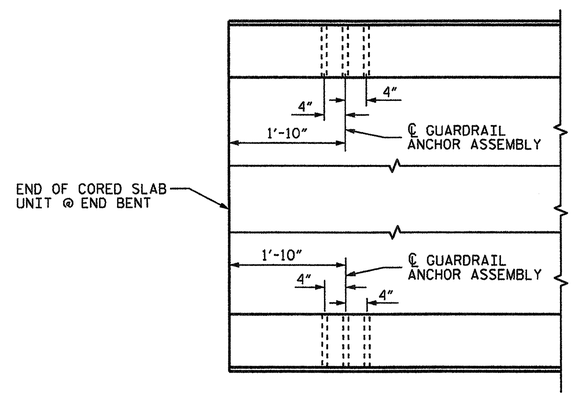

PLAN

LOCATION OF ANCHORS FOR GUARDRAIL

END BENT #1 SHOWN, END BENT #2 SIMILAR.

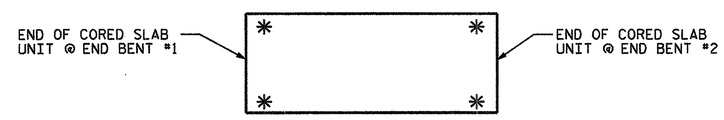

SKETCH SHOWING POINTS OF ATTACHMENT

✳ DENOTES GUARDRAIL ANCHOR ASSEMBLY

PROJECT NO. BD-5104F
WILSON COUNTY
STATION: 13+00.00 -L-

STATE OF NORTH CAROLINA
DEPARTMENT OF TRANSPORTATION
RALEIGH

STANDARD
GUARDRAIL ANCHORAGE FOR VERTICAL CONCRETE BARRIER RAIL

NORTH CAROLINA PROFESSIONAL SEAL 14045 ENGINEER TIMOTHY L. COGGINS
03/08/13

REVISIONS								SHEET NO.
NO.	BY:	DATE:	NO.	BY:	DATE:			19
1			3					TOTAL SHEETS
2			4					35

ASSEMBLED BY : N. RUFFIN	DATE : 1/11/13		
CHECKED BY : M. AHMED	DATE : 2/28/13		
DRAWN BY : MAA 5/10	ADDED 5/6/10		
CHECKED BY : GM 5/10	REV. 10/1/11	MAA/GM	
	REV. 12/5/11	MAA/GM	

08-MAR-2013 14:06
S:\DPG1\Tim\Division 4 LIBR\BD-5104F\BD5104F_sm_Draft_standards_01.dgn
nruffin

(SHT 1) STD. NO. GRA3

NOTES

STIRRUPS IN CAP MAY BE SHIFTED AS NECESSARY TO CLEAR DOWELS.

THE CONCRETE IN THE SHADED AREA OF THE WING SHALL BE POURED AFTER THE VERTICAL CONCRETE BARRIER RAIL IS CAST IF SLIP FORMING IS USED.

FOR PILE SPLICE DETAILS, SEE SHEET 4 OF 4.

FOR WING DETAILS, SEE SHEET 3 OF 4.

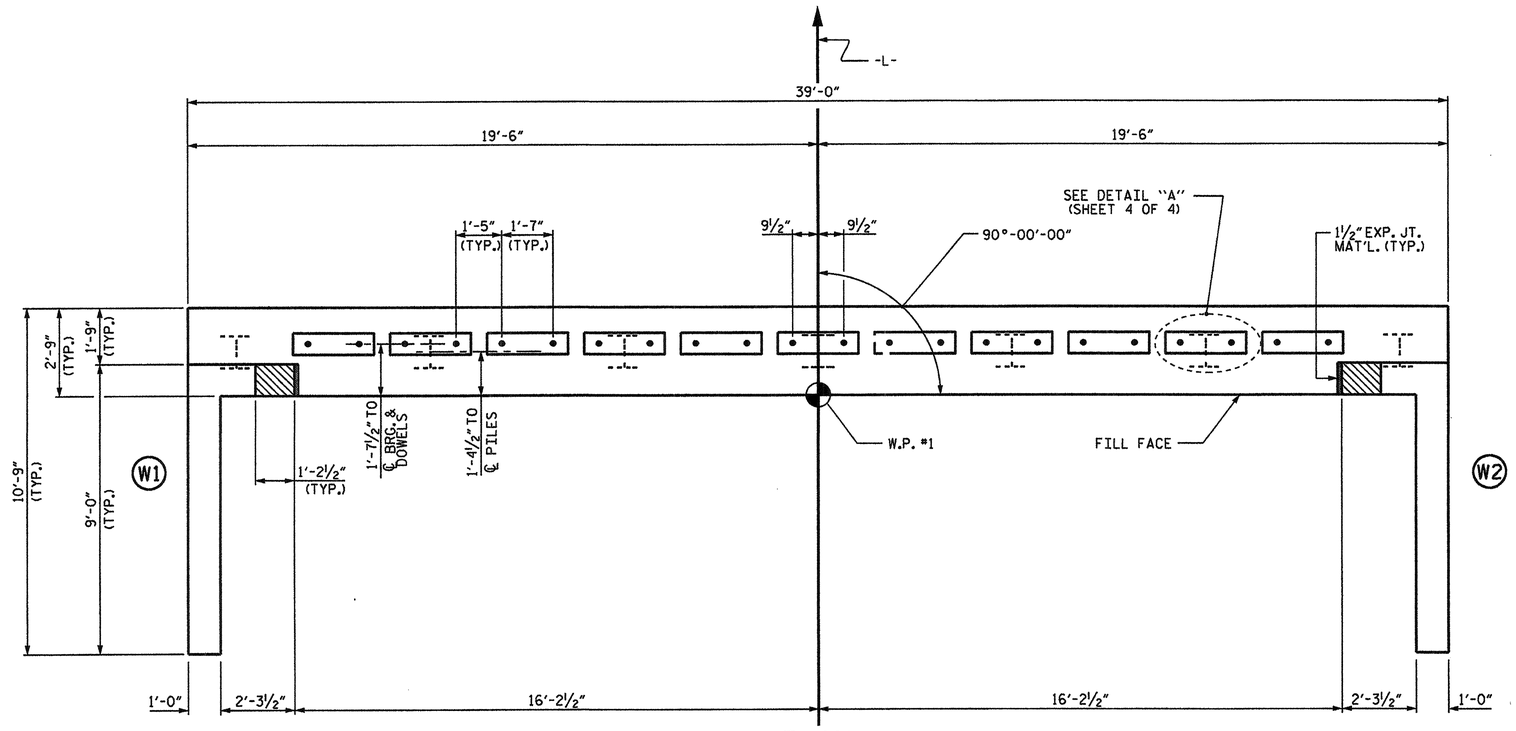

PLAN

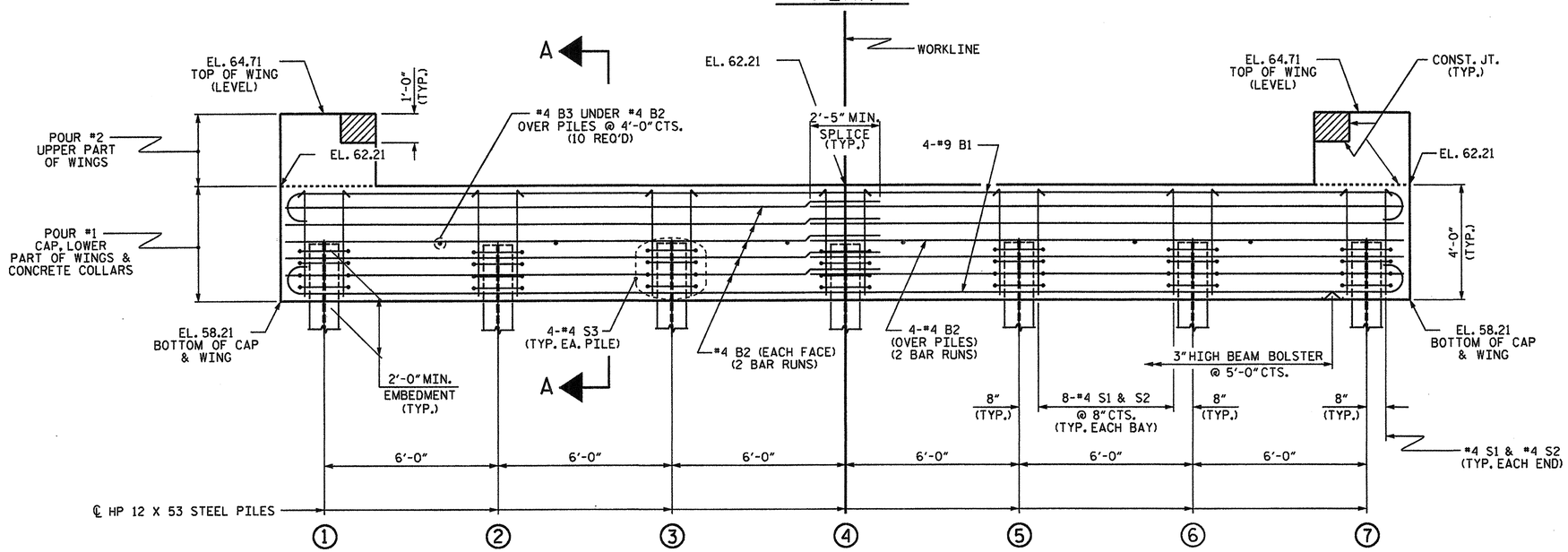

ELEVATION

WINGS NOT SHOWN FOR CLARITY.
FOR SECTION A-A, SEE SHEET 4 OF 4.
CONCRETE COLLARS FOR STEEL PILES NOT SHOWN IN PLAN AND ELEVATION VIEWS FOR CLARITY.
SEE "CORROSION PROTECTION FOR STEEL PILES DETAIL", SHEET 4 OF 4.

PROJECT NO. BD-5104F
WILSON COUNTY
STATION: 13+00.00 -L-

SHEET 1 OF 4

STATE OF NORTH CAROLINA
DEPARTMENT OF TRANSPORTATION
RALEIGH

SUBSTRUCTURE

END BENT No. 1

NORTH CAROLINA PROFESSIONAL SEAL 14045 ENGINEER TIMOTHY J. COGGINS
03/08/13

ASSEMBLED BY :	N. RUFFIN	DATE : 1/11/13
CHECKED BY :	M. AHMED	DATE : 3/1/13
DRAWN BY : WJH	12/11	
CHECKED BY : AAC	12/11	

REVISIONS								SHEET NO.
NO.	BY:	DATE:	NO.	BY:	DATE:			20
1			3					TOTAL SHEETS
2			4					35

08-MAR-2013 14:12
S:\DPG\Tim\Division 4 LIBR\BD-5104F\BD5104F_sm_Draft_standards_01.dgn
ruffin

STD. NO. EB_33_90S4

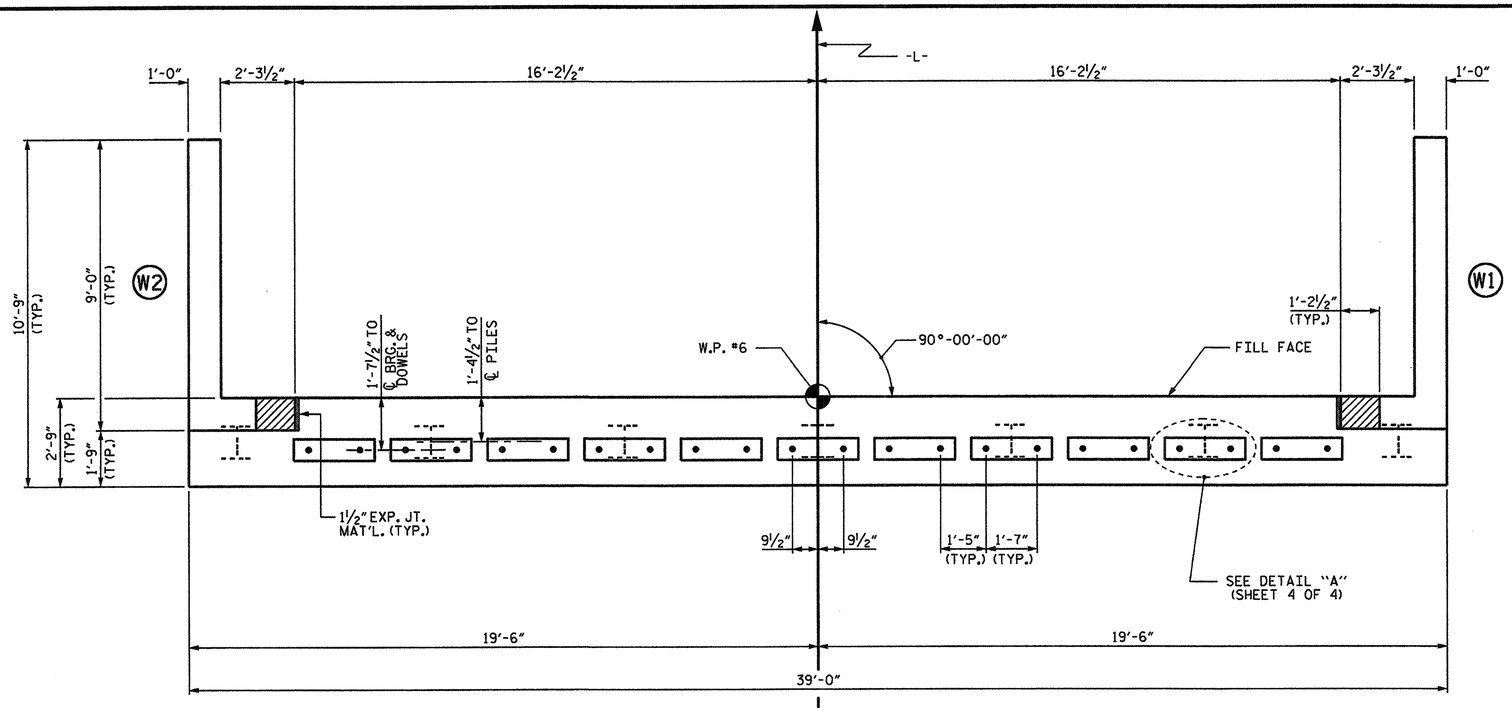

PLAN

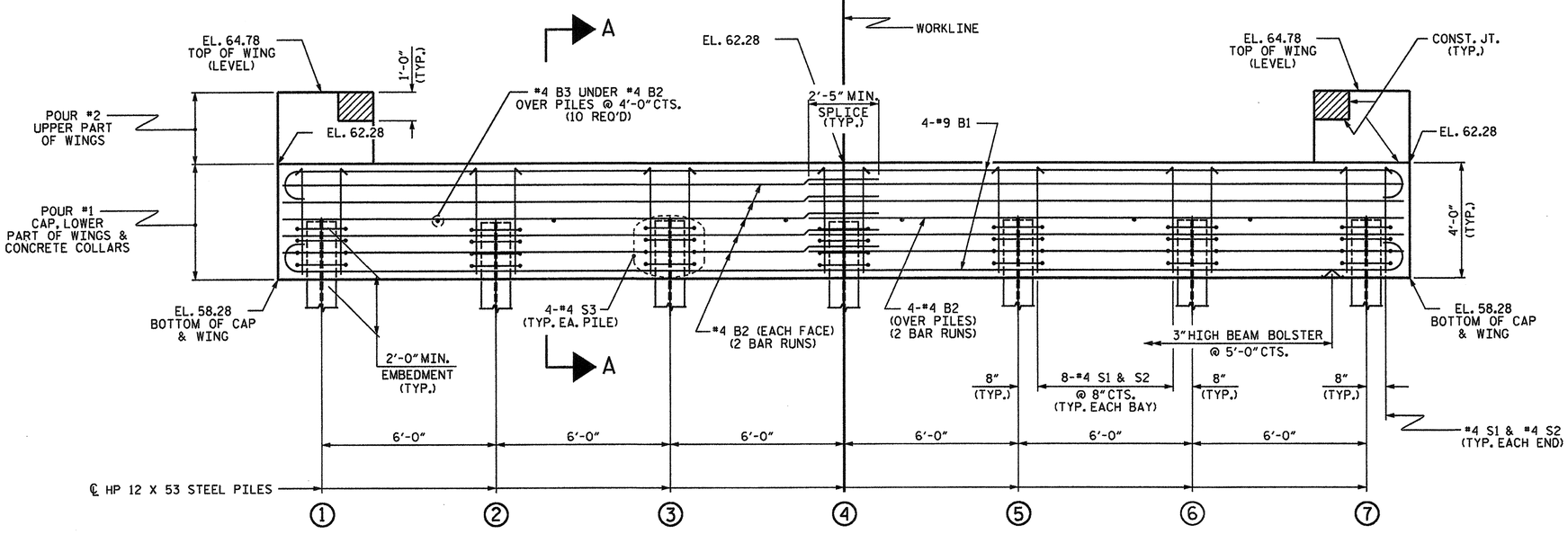

ELEVATION

WINGS NOT SHOWN FOR CLARITY.
FOR SECTION A-A, SEE SHEET 4 OF 4.
CONCRETE COLLARS FOR STEEL PILES NOT SHOWN IN PLAN AND ELEVATION VIEWS FOR CLARITY.
SEE "CORROSION PROTECTION FOR STEEL PILES DETAIL", SHEET 4 OF 4.

NOTES

STIRRUPS IN CAP MAY BE SHIFTED AS NECESSARY TO CLEAR DOWELS.

THE CONCRETE IN THE SHADED AREA OF THE WING SHALL BE POURED AFTER THE VERTICAL CONCRETE BARRIER RAIL IS CAST IF SLIP FORMING IS USED.

FOR PILE SPLICE DETAILS, SEE SHEET 4 OF 4.

FOR WING DETAILS, SEE SHEET 3 OF 4.

PROJECT NO. BD-5104F
WILSON COUNTY
STATION: 13+00.00 -L-

SHEET 2 OF 4

STATE OF NORTH CAROLINA
DEPARTMENT OF TRANSPORTATION
RALEIGH

SUBSTRUCTURE

END BENT No. 2

NORTH CAROLINA PROFESSIONAL SEAL 14045 ENGINEER TIMOTHY W. COBURN
03/08/13

ASSEMBLED BY :	N. RUFFIN	DATE : 1/11/13
CHECKED BY :	M. AHMED	DATE : 3/1/13
DRAWN BY : WJH	12/11	
CHECKED BY : AAC	12/11	

REVISIONS								SHEET NO.
NO.	BY:	DATE:	NO.	BY:	DATE:			21
1			3					TOTAL SHEETS
2			4					35

08-MAR-2013 14:12
S:\DPG1\Tim\Division 4 LIBR\BD-5104F\BD5104F_sm_Draft_standards_01.dgn
nruffin

STD. NO. EB_33_90S4

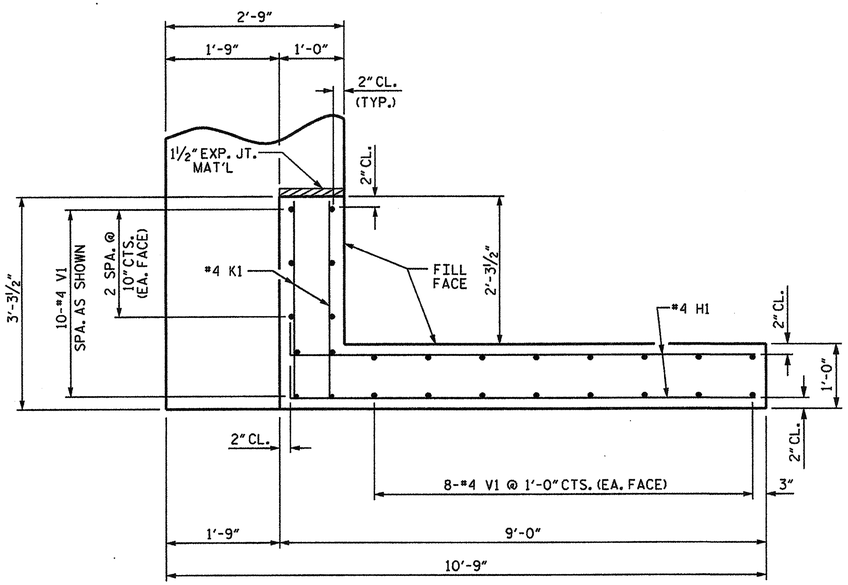

PLAN OF WING (W1)

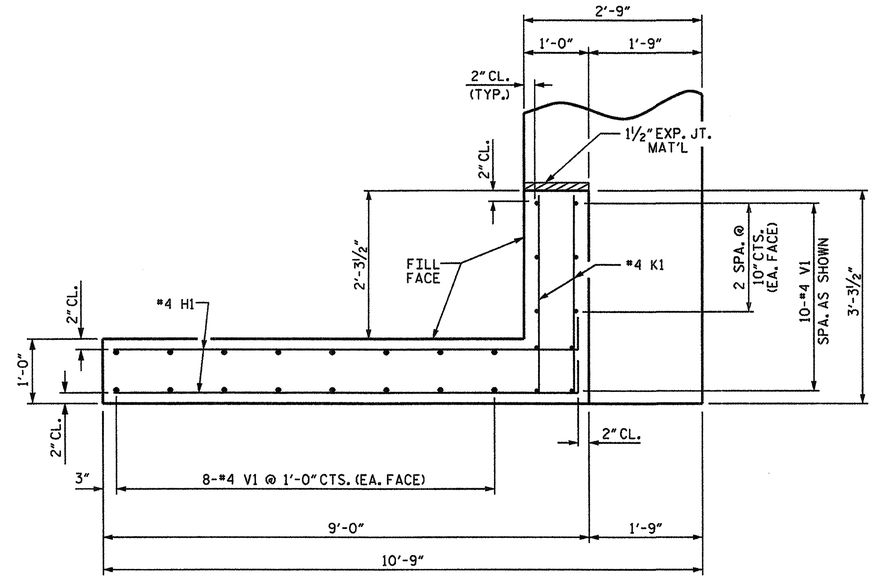

PLAN OF WING (W2)

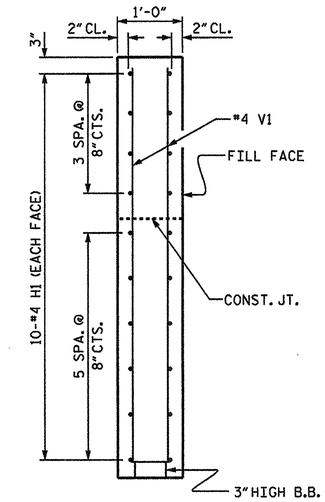

SECTION X-X

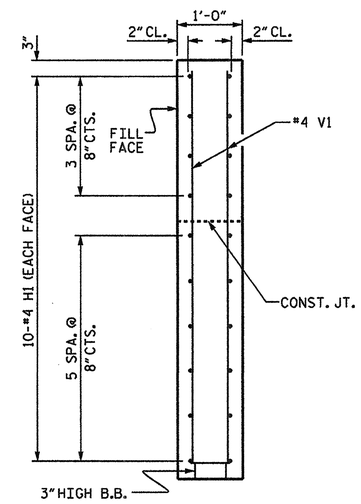

SECTION Y-Y

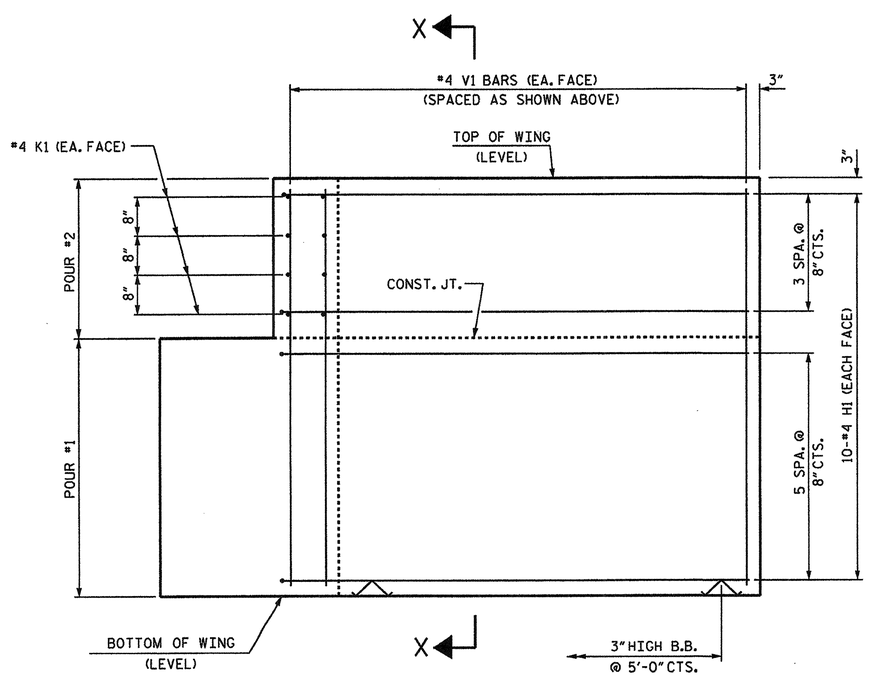

ELEVATION OF WING (W1)

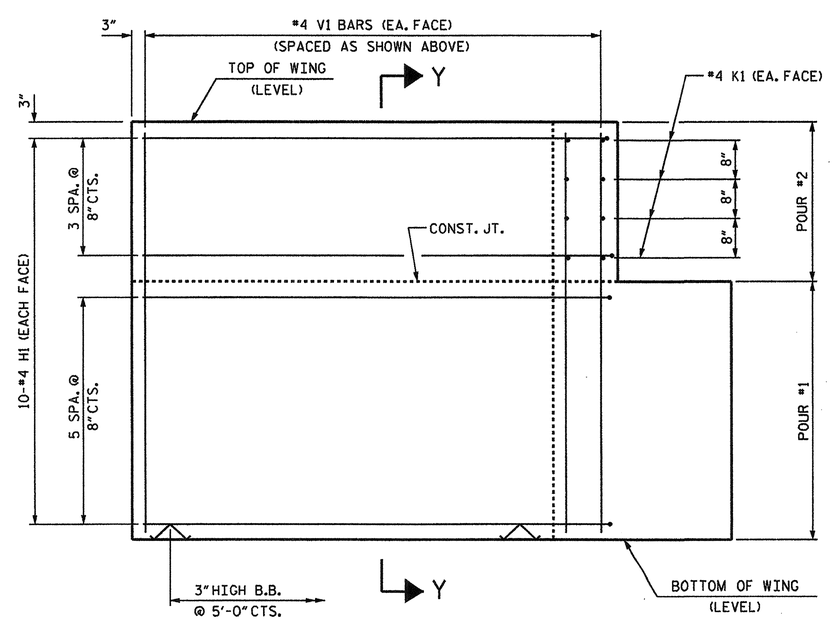

ELEVATION OF WING (W2)

WING DETAILS

PROJECT NO. BD-5104F

WILSON COUNTY

STATION: 13+00.00 -L-

SHEET 3 OF 4

STATE OF NORTH CAROLINA
DEPARTMENT OF TRANSPORTATION
RALEIGH

SUBSTRUCTURE

END BENT
WING DETAILS

NORTH CAROLINA PROFESSIONAL SEAL 14045 ENGINEER TIMOTHY L. COGGINS
03/08/13

ASSEMBLED BY : N. RUFFIN	DATE : 1/11/13		
CHECKED BY : M. AHMED	DATE : 3/1/13		
DRAWN BY : WJH 12/11			
CHECKED BY : AAC 12/11			

REVISIONS						SHEET NO.
NO.	BY:	DATE:	NO.	BY:	DATE:	22
1			3			TOTAL SHEETS
2			4			35

08-MAR-2013 14:12
S:\DPG1\Tim\Division 4 LIBR\BD-5104F\BD5104F_sm_Draft_standards_01.dgn
nruffin

STD. NO. EB_33_90S4

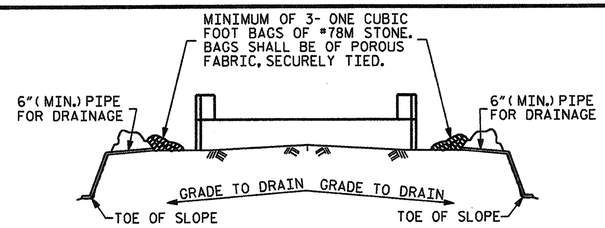

BAGGED STONE AND PIPE SHALL BE PLACED IMMEDIATELY AFTER COMPLETION OF END BENT EXCAVATION. PIPE MAY BE EITHER CONCRETE, CORRUGATED STEEL, CORRUGATED ALUMINUM ALLOY, OR CORRUGATED PLASTIC. PERFORATED PIPE WILL NOT BE ALLOWED.

BAGGED STONE SHALL REMAIN IN PLACE UNTIL THE ENGINEER DIRECTS THAT IT BE REMOVED. THE CONTRACTOR SHALL REMOVE AND DISPOSE OF SILT ACCUMULATIONS AT BAGGED STONE WHEN SO DIRECTED BY THE ENGINEER. BAGS SHALL BE REMOVED AND REPLACED WHENEVER THE ENGINEER DETERMINES THAT THEY HAVE DETERIORATED AND LOST THEIR EFFECTIVENESS.

NO SEPARATE PAYMENT WILL BE MADE FOR THIS WORK AND THE ENTIRE COST OF THIS WORK SHALL BE INCLUDED IN THE UNIT CONTRACT PRICE BID FOR THE SEVERAL PAY ITEMS.

TEMPORARY DRAINAGE AT END BENT

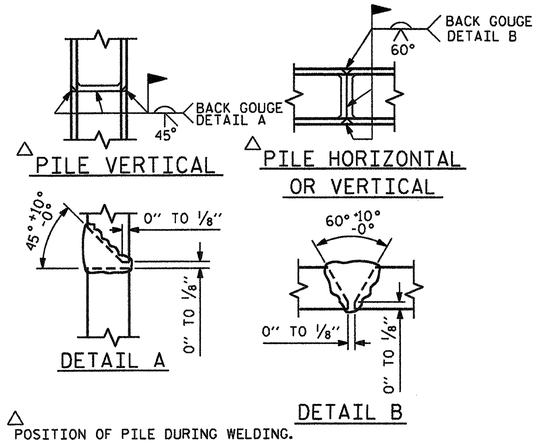

△ POSITION OF PILE DURING WELDING.

PILE SPLICE DETAILS

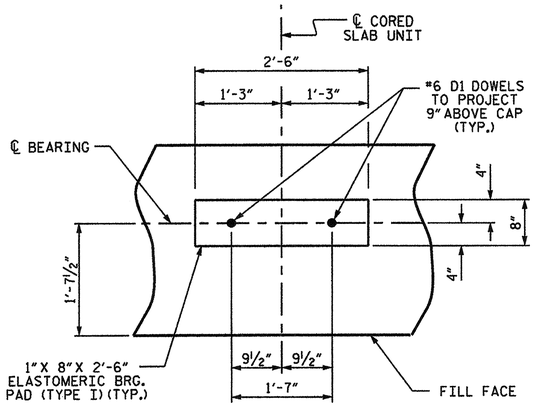

DETAIL "A"

(END BENT No. 1 SHOWN, END BENT No. 2 SIMILAR BY ROTATION)

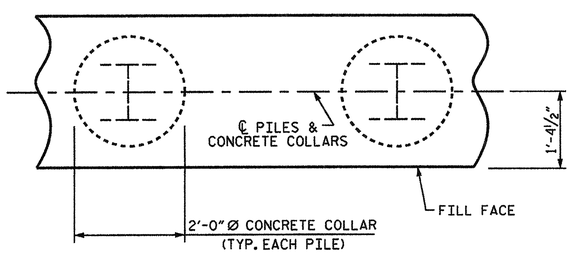

PLAN

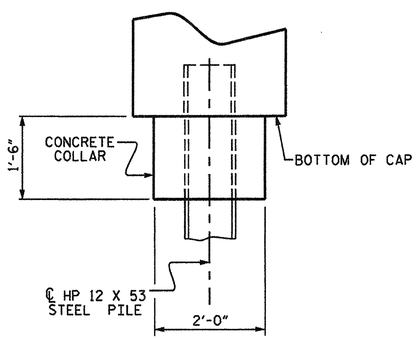

ELEVATION

CORROSION PROTECTION FOR STEEL PILES DETAIL

(END BENT No. 1 SHOWN, END BENT No. 2 SIMILAR BY ROTATION)

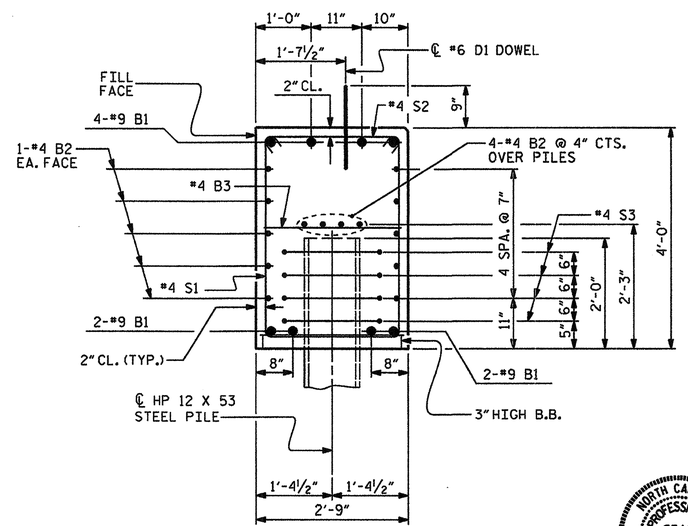

SECTION A-A

(CONCRETE COLLAR NOT SHOWN FOR CLARITY. SEE "CORROSION PROTECTION FOR STEEL PILES DETAIL.")

BAR TYPES

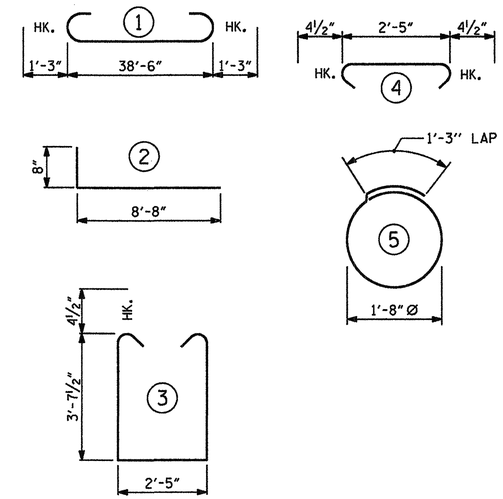

ALL BAR DIMENSIONS ARE OUT TO OUT.

END BENT No. 1	END BENT No. 2
HP 12 X 53 STEEL PILES	HP 12 X 53 STEEL PILES
NO: 7 LIN. FT.= 385	NO: 7 LIN. FT.= 350
PILE REDRIVES EA. 4	PILE REDRIVES EA. 4

BILL OF MATERIAL FOR ONE END BENT

BAR	NO.	SIZE	TYPE	LENGTH	WEIGHT
B1	8	#9	1	41'-0"	1115
B2	28	#4	STR	20'-7"	385
B3	10	#4	STR	2'-5"	16
D1	22	#6	STR	1'-6"	50
H1	40	#4	2	9'-4"	249
K1	16	#4	STR	2'-11"	31
S1	50	#4	3	10'-5"	348
S2	50	#4	4	3'-2"	106
S3	28	#4	5	6'-6"	122
V1	52	#4	STR	6'-2"	214

REINFORCING STEEL (FOR ONE END BENT) 2636 LBS.

CLASS A CONCRETE BREAKDOWN (FOR ONE END BENT)

POUR #1 CAP, LOWER PART OF WINGS & COLLARS 19.5 C.Y.

POUR #2 UPPER PART OF WINGS 2.1 C.Y.

TOTAL CLASS A CONCRETE 21.6 C.Y.

PROJECT NO. BD-5104F
WILSON COUNTY
STATION: 13+00.00 -L-

SHEET 4 OF 4

STATE OF NORTH CAROLINA
DEPARTMENT OF TRANSPORTATION
RALEIGH

SUBSTRUCTURE

END BENT No. 1 & 2 DETAILS

NORTH CAROLINA PROFESSIONAL SEAL 14045 ENGINEER TIMOTHY L. LEDGGINS
03/08/13

REVISIONS								SHEET NO.
NO.	BY:	DATE:	NO.	BY:	DATE:			23
1			3					TOTAL SHEETS
2			4					35

ASSEMBLED BY : N. RUFFIN		DATE : 1/11/13	
CHECKED BY : M. AHMED		DATE : 3/1/13	
DRAWN BY : WJH	12/11		
CHECKED BY : AAC	12/11		

08-MAR-2013 14:12
S:\DPG\Tim\Division 4 LIBR\BD-5104F\BD5104F_sm_Draft_standards_01.dgn
nruffin

STD. NO. EB_33_90S4

NOTES

STIRRUPS IN CAP MAY BE SHIFTED AS NECESSARY TO CLEAR DOWELS.

THE LATERAL GUIDES ARE NOT TO BE POURED UNTIL AFTER THE CORED SLAB UNITS ARE IN PLACE.

★ INVERT ALTERNATE STIRRUPS.

GALVANIZE THE TOP OF EACH INTERIOR BENT PILE A MINIMUM OF 27 FEET. GALVANIZE IN ACCORDANCE WITH SECTION 1076 OF THE STANDARD SPECIFICATIONS.

THE CONTRACTOR HAS THE OPTION TO OMIT THE LATERAL GUIDE IF APPROVED BY THE ENGINEER.

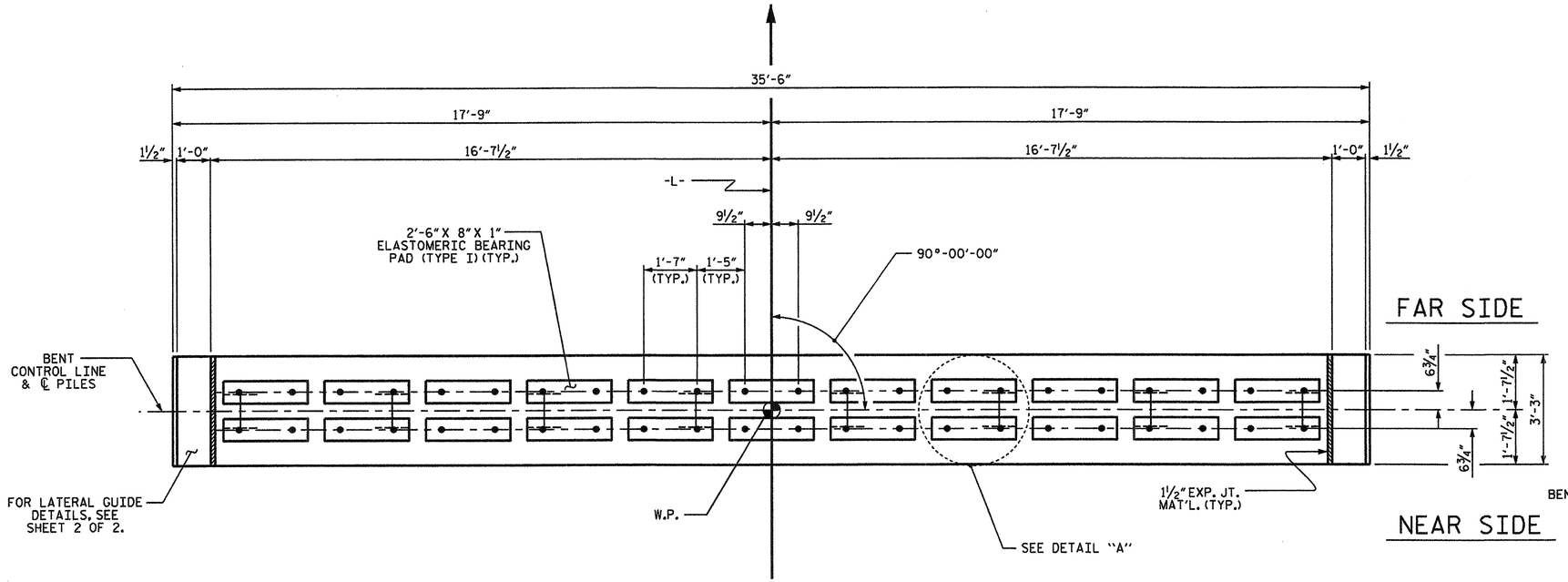

PLAN

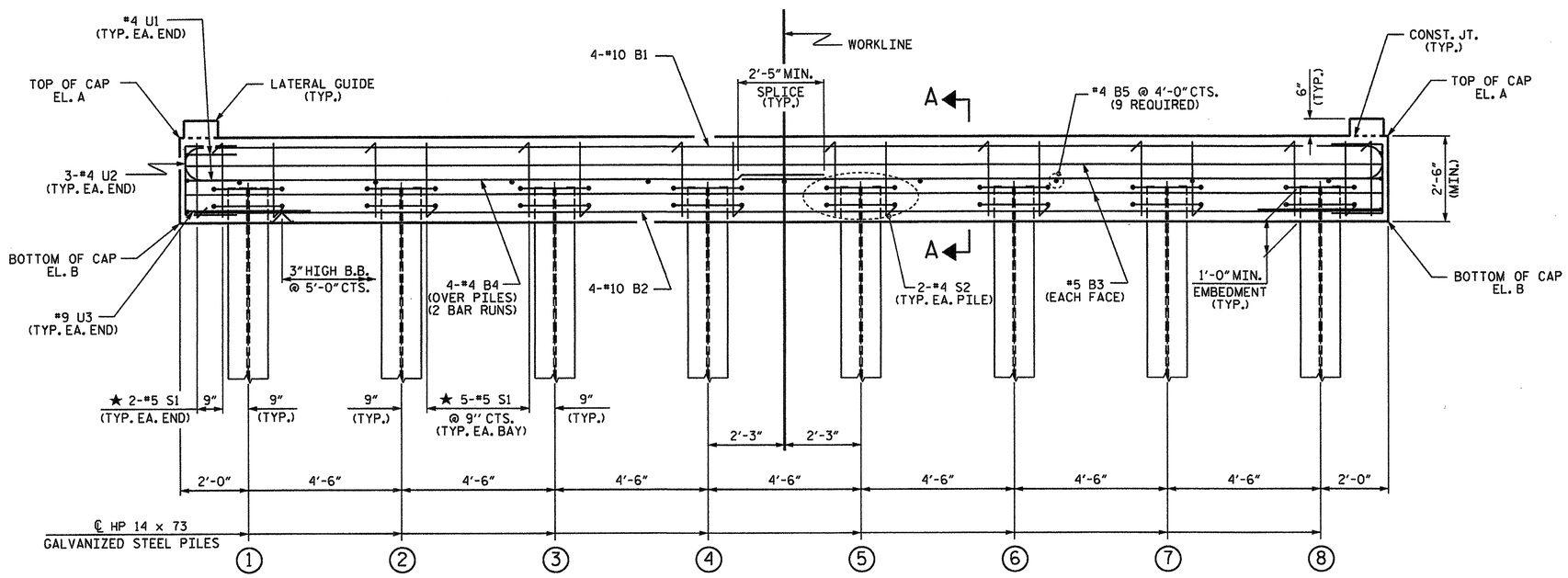

ELEVATION

FOR SECTION A-A, SEE SHEET 2 OF 2

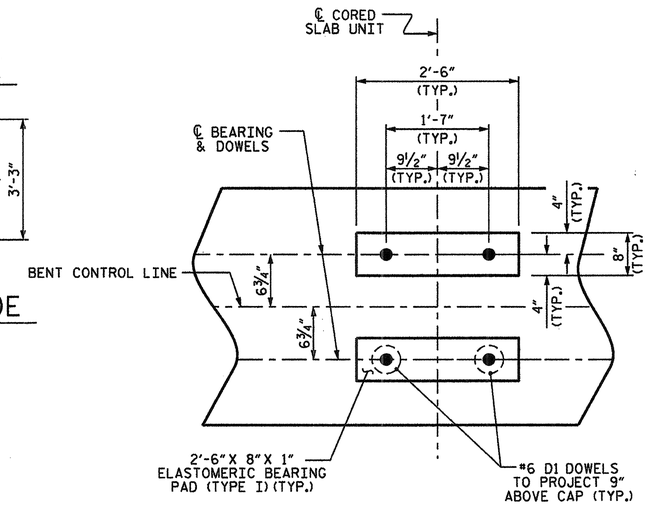

DETAIL "A"

(DIMENSIONS ARE TYPICAL EACH BEARING)

ELEVATIONS		
LOCATION	TOP OF CAP	BOTTOM OF CAP
	EL. A	EL. B
BENT #1	62.39	59.89
BENT #2	62.56	60.06
BENT #3	62.58	60.08

PROJECT NO. BD-5104F

WILSON COUNTY

STATION: 13+00.00 -L-

SHEET 1 OF 2

STATE OF NORTH CAROLINA
DEPARTMENT OF TRANSPORTATION
RALEIGH

SUBSTRUCTURE

BENT No. 1, 2, & 3

NORTH CAROLINA PROFESSIONAL SEAL 14045 ENGINEER TIMOTHY K. COGGINS
03/08/13

REVISIONS						SHEET NO.
NO.	BY:	DATE:	NO.	BY:	DATE:	24
1			3			TOTAL SHEETS
2			4			35

ASSEMBLED BY : N. RUFFIN DATE : 2/27/13
CHECKED BY : M. AHMED DATE : 3/4/13

DRAWN BY : DGE 05/10
CHECKED BY : MKT 05/10

08-MAR-2013 15:28
S:\DPGI\Tim\Division 4 LIBR\BD-5104F\BD5104F_sm_Draft_standards_01.dgn
nruffin

STD. NO. 14" HP_BT_33_90S_<60'

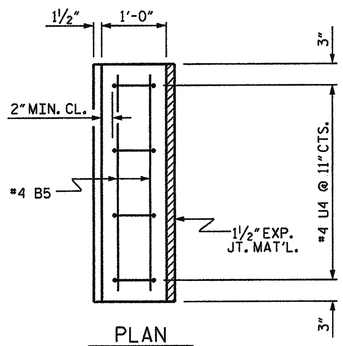

PLAN

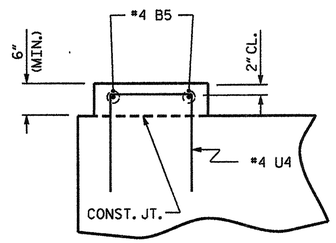

ELEVATION

LATERAL GUIDE DETAILS

(LEFT LATERAL GUIDE SHOWN, RIGHT SIDE SIMILAR)

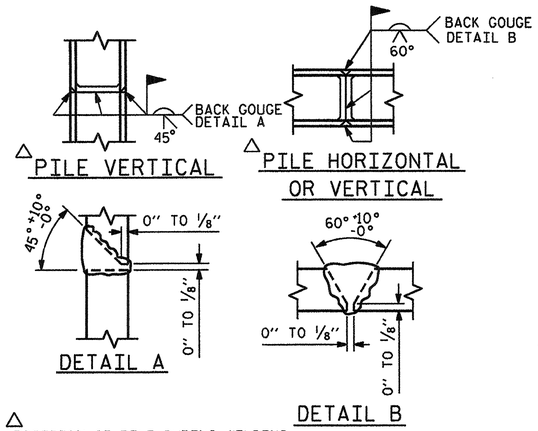

△ PILE VERTICAL

△ PILE HORIZONTAL OR VERTICAL

DETAIL A

DETAIL B

△ POSITION OF PILE DURING WELDING.

PILE SPLICE DETAILS

BAR TYPES

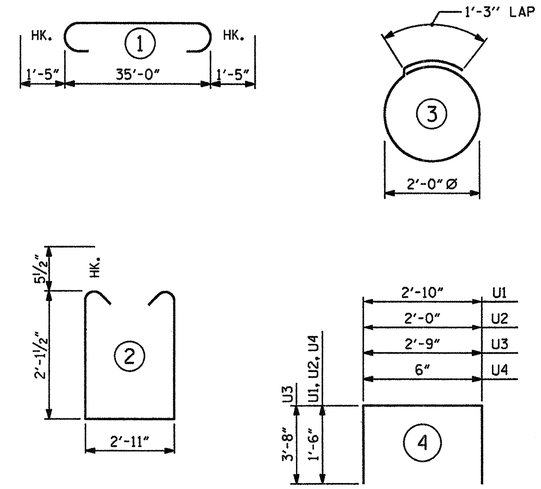

ALL BAR DIMENSIONS ARE OUT TO OUT.

BILL OF MATERIAL FOR ONE BENT

BAR	NO.	SIZE	TYPE	LENGTH	WEIGHT
B1	4	#10	1	37'-10"	651
B2	4	#10	STR	35'-2"	605
B3	4	#5	STR	35'-2"	147
B4	8	#4	STR	18'-10"	101
B5	13	#4	STR	2'-11"	25
D1	44	#6	STR	1'-6"	99
S1	39	#5	2	8'-1"	329
S2	16	#4	3	7'-7"	81
U1	4	#4	4	5'-10"	16
U2	6	#4	4	5'-0"	20
U3	2	#9	4	10'-1"	69
U4	8	#4	4	3'-6"	19

REINFORCING STEEL (FOR ONE BENT) 2162 LBS

CLASS A CONCRETE BREAKDOWN (FOR ONE BENT)

POUR #1 (CAP) 10.7 C.Y.

POUR #2 (LATERAL GUIDES) 0.1 C.Y.

TOTAL CLASS A CONCRETE 10.8 C.Y.

HP 14 X 73 GALVANIZED STEEL PILES (FOR ONE BENT)

No. 8 LIN. FT. 480

PILE REDRIVES (FOR ONE BENT) EA. 4

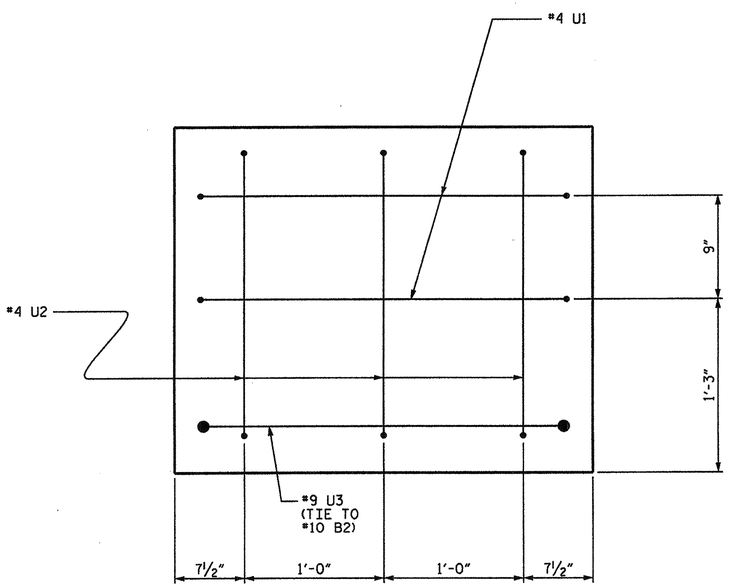

END OF CAP VIEW

(TYPICAL BOTH ENDS)

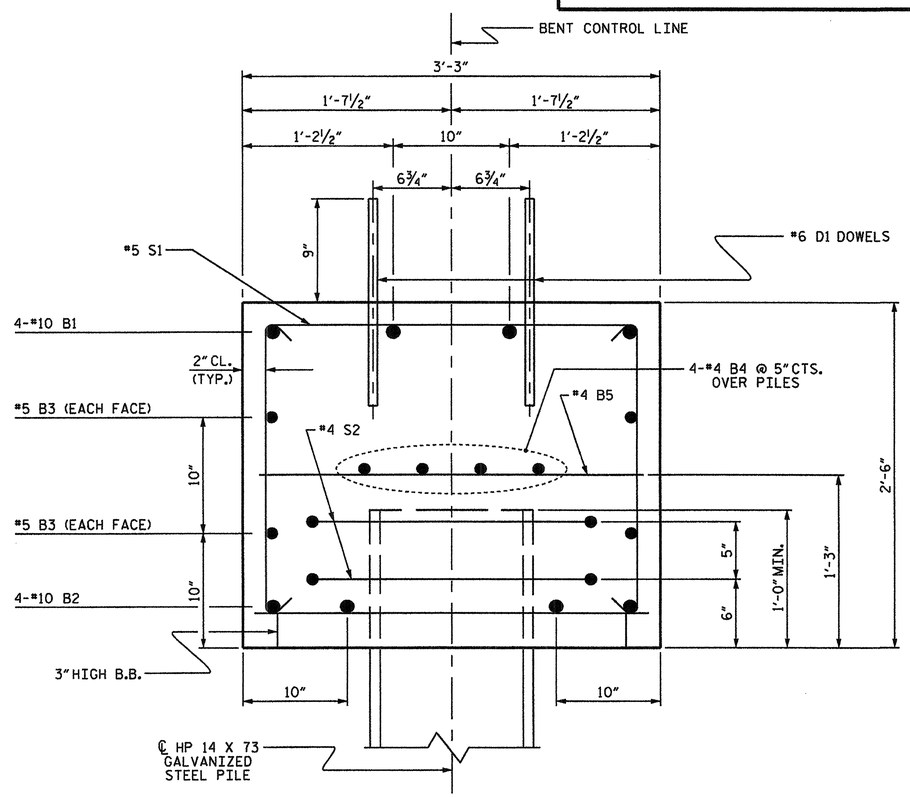

SECTION A-A

PROJECT NO. BD-5104F

WILSON COUNTY

STATION: 13+00.00 -L-

SHEET 2 OF 2

STATE OF NORTH CAROLINA
DEPARTMENT OF TRANSPORTATION
RALEIGH

SUBSTRUCTURE

BENT No. 1, 2, & 3

NORTH CAROLINA PROFESSIONAL SEAL 14045 ENGINEER TIMOTHY DE COGGINS

03/08/13

REVISIONS						SHEET NO.
NO.	BY:	DATE:	NO.	BY:	DATE:	25
1			3			TOTAL SHEETS
2			4			35

DRAWN BY : N. RUFFIN DATE : 2/27/13
CHECKED BY : M. AHMED DATE : 3/4/13

DRAWN BY : DGE 05/10
CHECKED BY : MKT 05/10

08-MAR-2013 15:28
S:\DPGI\Tim\Division 4 LIBR\BD-5104F\BD5104F_sm_Draft_standards_01.dgn
nruffin

STD. NO. 14" HP_BT_33_90S_<60'

NOTES

STIRRUPS IN CAP MAY BE SHIFTED AS NECESSARY TO CLEAR DOWELS.

THE LATERAL GUIDES ARE NOT TO BE POURED UNTIL AFTER THE CORED SLAB UNITS ARE IN PLACE.

★ INVERT ALTERNATE STIRRUPS.

FOR ADDITIONAL REINFORCING STEEL IN PP 18 × 0.50 GALVANIZED STEEL PILES, SEE SHEET 3 OF 3.

GALVANIZE THE TOP OF EACH BENT PILE A MINIMUM OF 32 FEET. GALVANIZE IN ACCORDANCE WITH SECTION 1076 OF THE STANDARD SPECIFICATIONS.

THE CONTRACTOR HAS THE OPTION TO OMIT THE LATERAL GUIDE IF APPROVED BY THE ENGINEER.

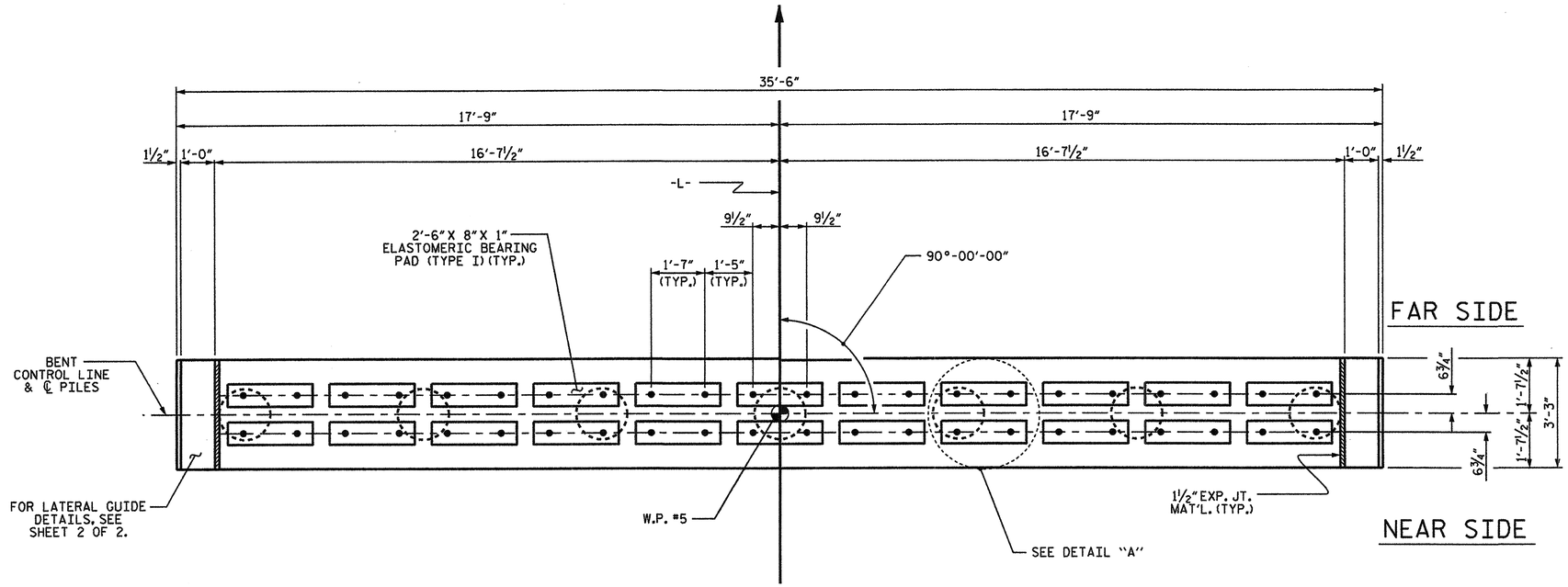

PLAN

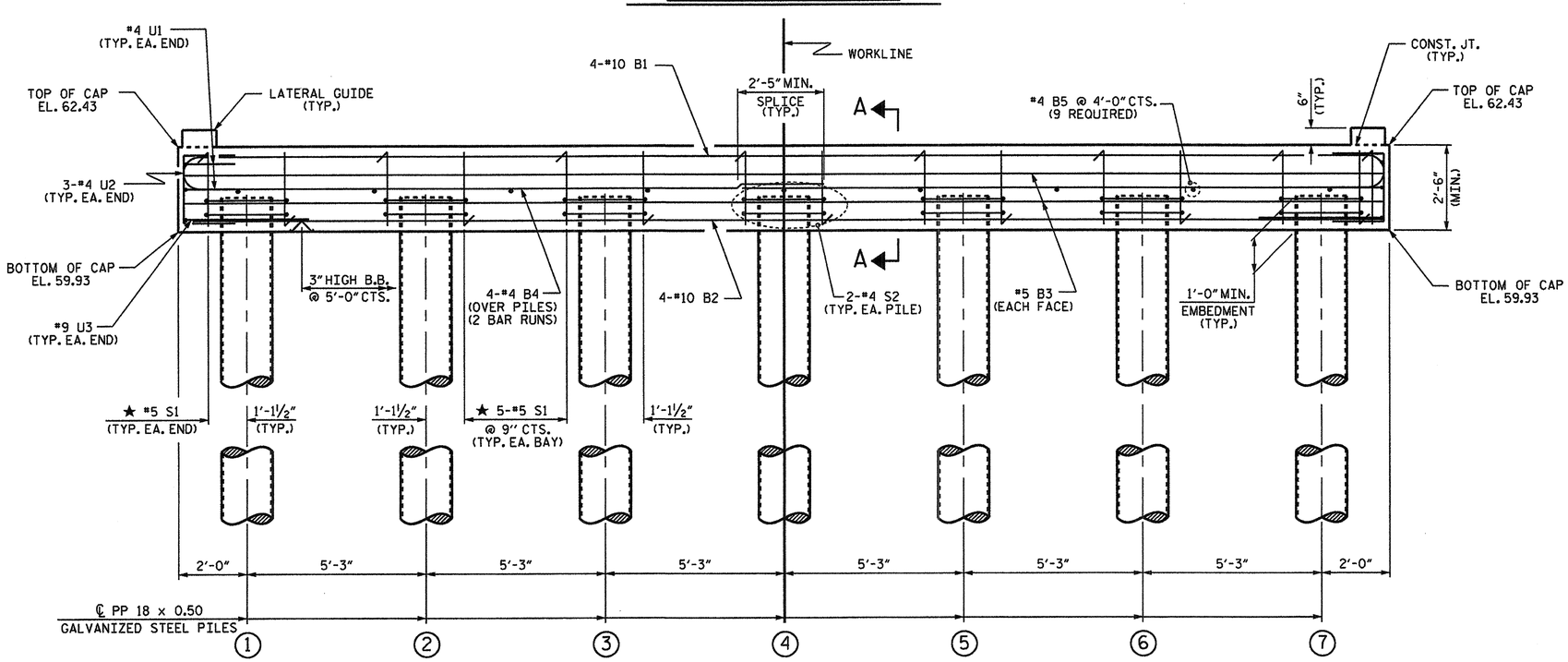

ELEVATION

FOR SECTION A-A, SEE SHEET 2 OF 3

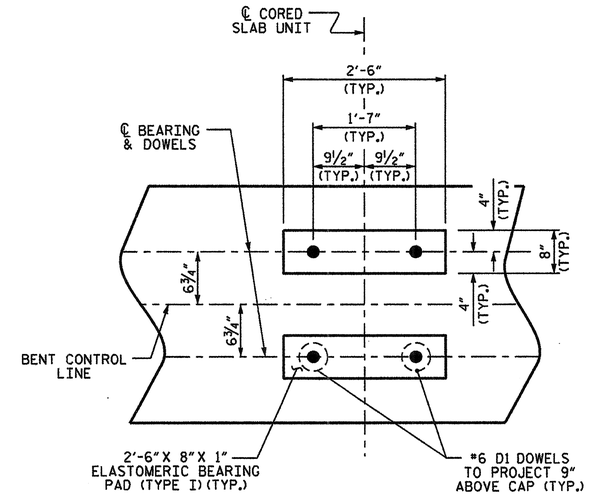

DETAIL "A"

(DIMENSIONS ARE TYPICAL EACH BEARING)

PROJECT NO. BD-5104F

WILSON COUNTY

STATION: 13+00.00 -L-

SHEET 1 OF 3

STATE OF NORTH CAROLINA
DEPARTMENT OF TRANSPORTATION
RALEIGH

SUBSTRUCTURE

BENT No. 4

NORTH CAROLINA PROFESSIONAL SEAL 14045 ENGINEER TIMOTHY W. COGGINS

03/04/13

REVISIONS								SHEET NO.
NO.	BY:	DATE:	NO.	BY:	DATE:			26
1			3					TOTAL SHEETS
2			4					35

ASSEMBLED BY : N. RUFFIN DATE : 2/27/13
CHECKED BY : M. AHMED DATE : 3/4/13

DRAWN BY : DGE 06/10
CHECKED BY : MKT 06/10

08-MAR-2013 15:28
S:\DPG1\Tim\Division 4 LIBR\BD-5104F\BD5104F_sm_Draft_standards_01.dgn
druffin

STD.NO. 18" PP_BT_33_90S_<60'

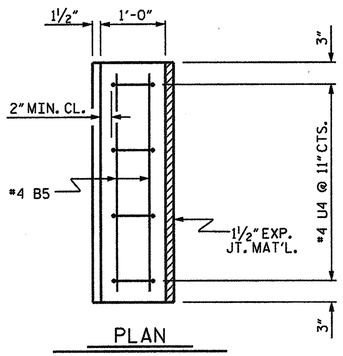

PLAN

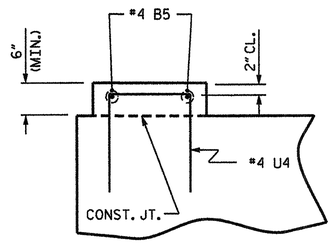

ELEVATION

LATERAL GUIDE DETAILS

(LEFT LATERAL GUIDE SHOWN, RIGHT SIDE SIMILAR)

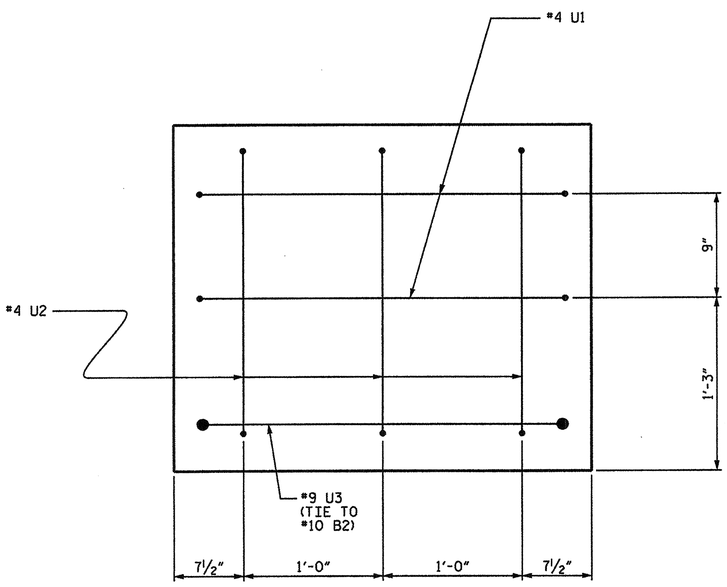

END OF CAP VIEW

(TYPICAL BOTH ENDS)

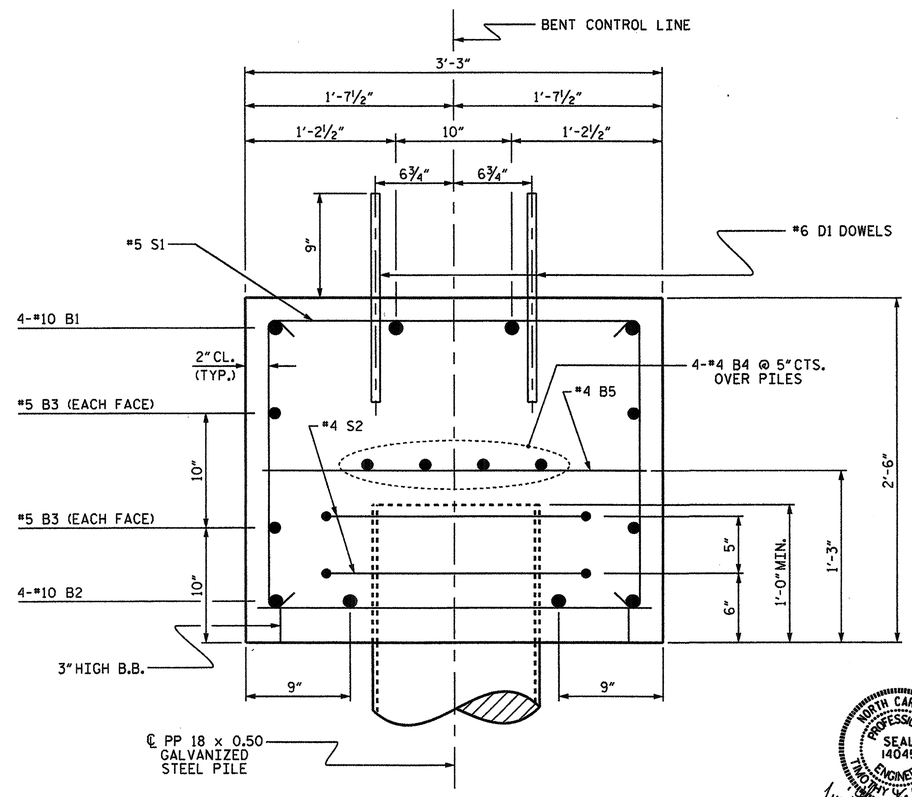

SECTION A-A

BAR TYPES

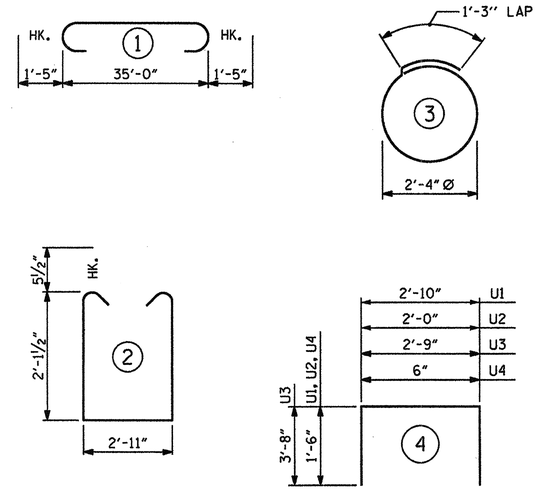

ALL BAR DIMENSIONS ARE OUT TO OUT.

BILL OF MATERIAL FOR ONE BENT

BAR	NO.	SIZE	TYPE	LENGTH	WEIGHT
B1	4	#10	1	37'-10"	651
B2	4	#10	STR	35'-2"	605
B3	4	#5	STR	35'-2"	147
B4	8	#4	STR	18'-10"	101
B5	13	#4	STR	2'-11"	25
D1	44	#6	STR	1'-6"	99
S1	32	#5	2	8'-1"	270
S2	14	#4	3	8'-7"	80
U1	4	#4	4	5'-10"	16
U2	6	#4	4	5'-0"	20
U3	2	#9	4	10'-1"	69
U4	8	#4	4	3'-6"	19

REINFORCING STEEL (FOR ONE BENT) 2102 LBS

CLASS A CONCRETE BREAKDOWN (FOR ONE BENT)

POUR #1 (CAP) ▲ 10.2 C.Y.
POUR #2 (LATERAL GUIDES) 0.1 C.Y.

TOTAL CLASS A CONCRETE 10.3 C.Y.

PP 18 x 0.50 GALVANIZED STEEL PILES (FOR ONE BENT)

No. 7 LIN. FT. 420

PILE REDRIVES (FOR ONE BENT) EA. 4

▲ CONCRETE DISPLACED BY THE PP 18 x 0.50 GALVANIZED STEEL PILES HAS BEEN DEDUCTED FROM THE CONCRETE QUANTITY.

PROJECT NO. BD-5104F
WILSON COUNTY
STATION: 13+00.00 -L-

SHEET 2 OF 3

STATE OF NORTH CAROLINA
DEPARTMENT OF TRANSPORTATION
RALEIGH

SUBSTRUCTURE

BENT No. 4

NORTH CAROLINA PROFESSIONAL SEAL 14045 ENGINEER TIMOTHY K. COGGINS
03/08/13

DRAWN BY : N. RUFFIN	DATE : 2/27/13
CHECKED BY : M. AHMED	DATE : 3/4/13
DRAWN BY : DGE 06/10	
CHECKED BY : MKT 06/10	

REVISIONS							SHEET NO.
NO.	BY:	DATE:	NO.	BY:	DATE:		27
1			3				TOTAL SHEETS
2			4				35

08-MAR-2013 15:28
S:\DPG1\Tim\Division 4 LIBR\BD-5104F\BD5104F_sm_Draft_standards_01.dgn
nruffin

STD.NO. 18" PP_BT_33_90S_<60'

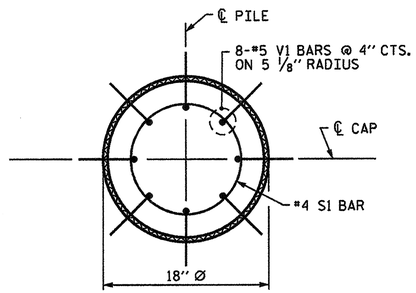

PLAN

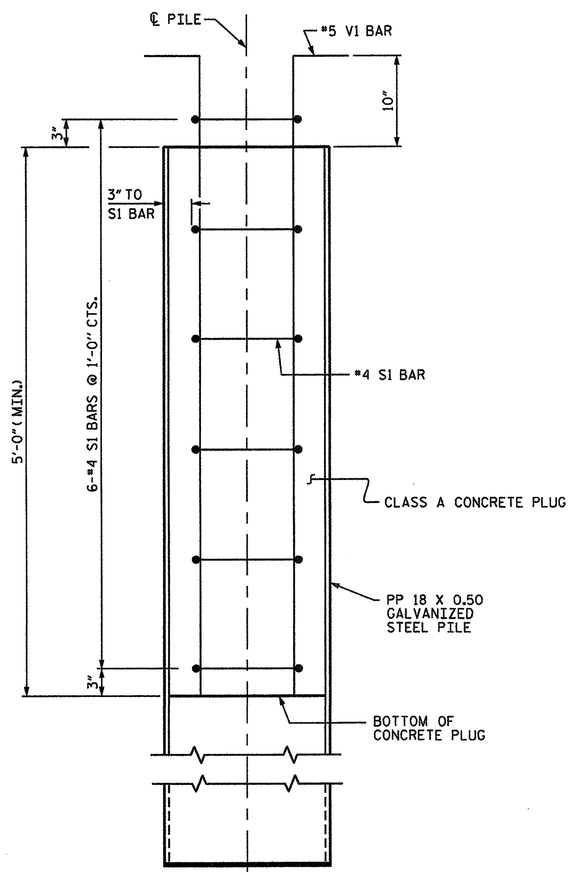

ELEVATION

PP 18 X 0.50 GALVANIZED STEEL PILE

(OPEN END)

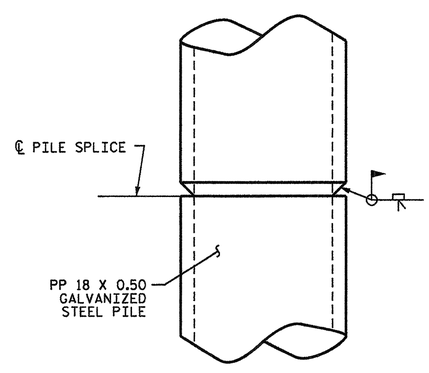

PIPE PILE SPLICE DETAIL

NOTES

PIPE PILES SHALL BE IN ACCORDANCE WITH SECTION 1084 OF THE STANDARD SPECIFICATIONS.

GALVANIZE STEEL PIPE PILES IN ACCORDANCE WITH SECTION 1076 OF THE STANDARD SPECIFICATIONS UNLESS METALLIZING IS REQUIRED. GALVANIZING OR METALLIZING PIPE PILE PLATES IS NOT REQUIRED.

REMOVE AND REPLACE OR REPAIR TO THE SATISFACTION OF THE ENGINEER PILES THAT ARE DAMAGED, DEFORMED OR COLLAPSED DURING INSTALLATION OR DRIVING.

PILE SPLICES SHALL BE IN ACCORDANCE WITH THE STANDARD SPECIFICATIONS AND AWS D1.1.

FOR OPEN END PIPE PILES, REMOVE ENOUGH SOIL AND WATER FROM INSIDE THE PILES TO CONSTRUCT THE CONCRETE PLUG WITHOUT FOULING THE CONCRETE.

FORM THE CONCRETE PLUG SUCH THAT THE REINFORCING STEEL OR CONCRETE DOES NOT MOVE AND THE CLEARANCE FROM THE REINFORCING STEEL TO THE INSIDE OF THE PILE IS MAINTAINED AFTER CONCRETE PLACEMENT. DO NOT PLACE CONCRETE IN THE BENT CAP UNTIL THE CONCRETE PLUG HAS ATTAINED A MINIMUM COMPRESSIVE STRENGTH OF 1500 PSI.

THE REINFORCING STEEL, CLASS A CONCRETE, AND GALVANIZING ARE CONSIDERED INCIDENTAL TO THE CONTRACT UNIT PRICE BID PER LINEAR FOOT FOR PP 18 X 0.50 GALVANIZED STEEL PILES.

BILL OF MATERIAL FOR ONE PP 18 X 0.50 GALVANIZED STEEL PILE

BAR	NO.	SIZE	TYPE	LENGTH	WEIGHT
S1	6	#4	1	4'-5"	18
V1	8	#5	2	6'-8"	56
REINFORCING STEEL =					74 lbs
CLASS A CONCRETE					
5'-0" MINIMUM PLUG					0.3 CY

BAR TYPES

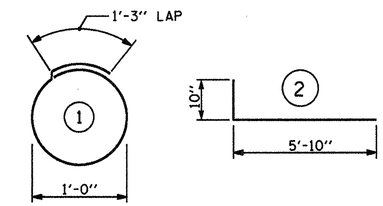

ALL BAR DIMENSIONS ARE OUT TO OUT.

PROJECT NO. BD-5104F

WILSON COUNTY

STATION: 13+00.00 -L-

SHEET 3 OF 3

STATE OF NORTH CAROLINA
DEPARTMENT OF TRANSPORTATION
RALEIGH

STANDARD

18" STEEL PIPE PILE
(OPEN ENDED)

NORTH CAROLINA PROFESSIONAL SEAL 14045 ENGINEER TIMOTHY W. COGGINS

03/08/13

REVISIONS						SHEET NO.
NO.	BY:	DATE:	NO.	BY:	DATE:	28
1			3			TOTAL SHEETS
2			4			35

STD. NO. SPP3

ASSEMBLED BY : N. RUFFIN		DATE : 2/27/13	
CHECKED BY : M. AHMED		DATE : 3/4/13	
DRAWN BY : RWW 1/01	REV. 10/1/05	LBG/TLA	
CHECKED BY : LES 1/01	REV. 5/1/06R	MAA/KMM	
	REV. 10/1/11	MAA/GM	

08-MAR-2013 15:28
S:\DPG1\Tim\Division 4 LIBR\BD-5104F\BD5104F_sm_Draft_standards_01.dgn
druffin

NOTES :

FOR BERM WIDTH DIMENSIONS, SEE GENERAL DRAWING.

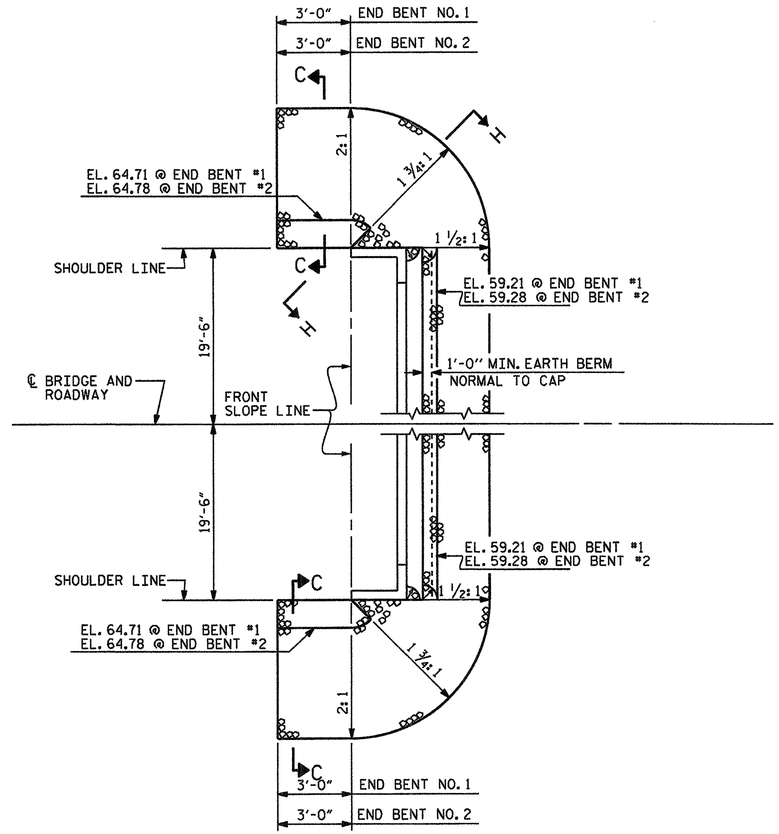

SHOULDER RIP RAP IS HIGHER THAN BERM RIP RAP

ESTIMATED QUANTITIES		
BRIDGE @ STA. 13+00.00 -L-	RIP RAP CLASS II (2'-0" THICK)	GEOTEXTILE FOR DRAINAGE
	TONS	SQUARE YARDS
END BENT 1	100	109
END BENT 2	90	99

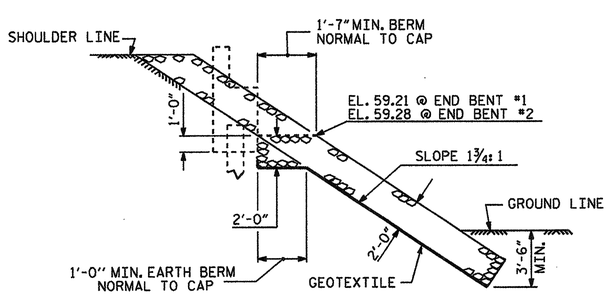

SECTION H-H

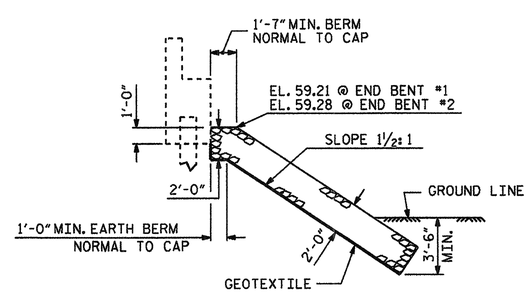

℄ SECTION
BERM RIP RAPPED

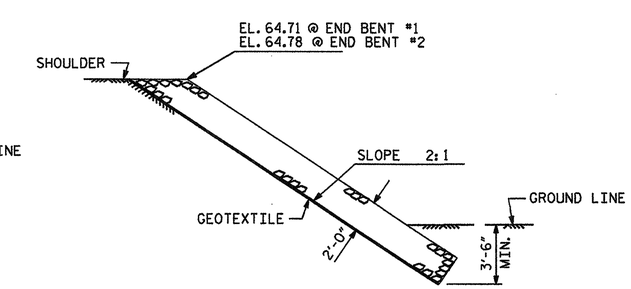

SECTION C-C

PROJECT NO. BD-5104F

WILSON COUNTY

STATION: 13+00.00 -L-

STATE OF NORTH CAROLINA
DEPARTMENT OF TRANSPORTATION
RALEIGH

STANDARD

RIP RAP DETAILS

NORTH CAROLINA PROFESSIONAL SEAL 14045 ENGINEER TIMOTHY L. COGGINS

03/08/13

ASSEMBLED BY :	N. RUFFIN	DATE : 1/15/13
CHECKED BY :	M. AHMED	DATE : 3/5/13

DRAWN BY : REK 1/84	REV. 5/1/06R	TLA/GM
CHECKED BY : RDU 1/84	REV. 10/1/11	MAA/GM
	REV. 12/21/11	MAA/GM

REVISIONS								SHEET NO.
NO.	BY:	DATE:	NO.	BY:	DATE:			29
1			3					TOTAL SHEETS
2			4					35

08-MAR-2013 15:28
S:\DPG1\Tim\Division 4 LIBR\BD-5104F\BD5104F_sm_Draft_standards_01.dgn
nruffin

STD. NO. RR1 (Sht 2)

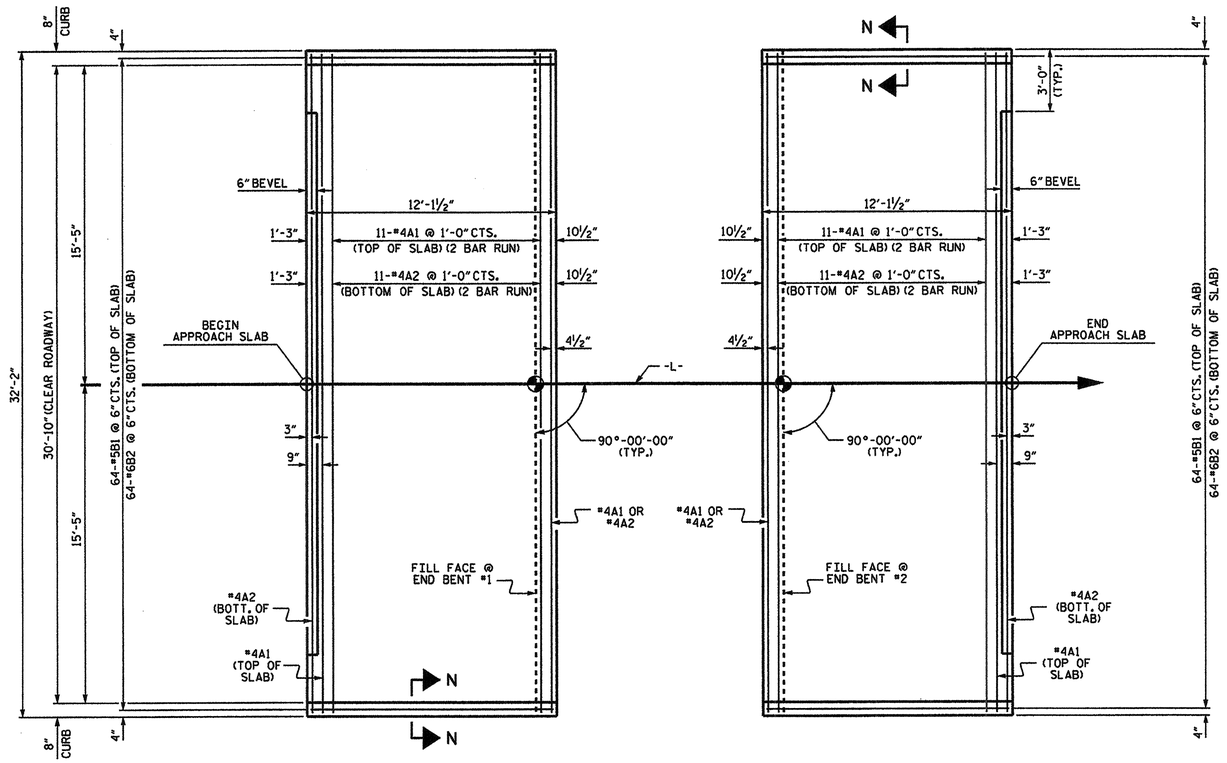

PLAN @ END BENT #1

PLAN @ END BENT #2

DIMENSIONS SHOWN ARE TYPICAL FOR BOTH APPROACH SLABS

NOTES

FOR BRIDGE APPROACH FILL INCLUDING GEOTEXTILE, 4"Ø DRAINAGE PIPE, AND #78M STONE BACKFILL, SEE ROADWAY PLANS.

GEOTEXTILE SHALL BE TYPE 1IN ACCORDANCE WITH THE STANDARD SPECIFICATIONS SECTION 1056.

#78M STONE BACKFILL (CLASS V SELECT MATERIAL) SHALL BE IN ACCORDANCE WITH STANDARD SPECIFICATIONS SECTION 1016.

#78M STONE BACKFILL IS TO BE CONTINUOUS ALONG FILL FACE OF BACKWALL FROM OUTSIDE EDGE TO OUTSIDE EDGE OF APPROACH SLAB.

FOR THE 4"Ø DRAINAGE PIPE OUTLET(S), SEE ROADWAY STANDARD DRAWINGS.

AREA BETWEEN THE WINGWALL AND APPROACH SLAB SHALL BE GRADED TO DRAIN THE WATER AWAY FROM THE FILL FACE OF THE BRIDGE AND SHALL BE PAVED. SEE ROADWAY PLANS.

APPROACH SLAB GROOVING IS NOT REQUIRED.

BILL OF MATERIAL

APPROACH SLAB AT EB #1

BAR	NO.	SIZE	TYPE	LENGTH	WEIGHT
* A1	26	#4	STR	16'-11"	294
A2	26	#4	STR	16'-9"	291
* B1	64	#5	STR	11'-2"	745
B2	64	#6	STR	11'-8"	1121
REINFORCING STEEL				LBS.	1412
* EPOXY COATED REINFORCING STEEL				LBS.	1039
CLASS AA CONCRETE				C.Y.	18.6

APPROACH SLAB AT EB #2

BAR	NO.	SIZE	TYPE	LENGTH	WEIGHT
* A1	26	#4	STR	16'-11"	294
A2	26	#4	STR	16'-9"	291
* B1	64	#5	STR	11'-2"	745
B2	64	#6	STR	11'-8"	1121
REINFORCING STEEL				LBS.	1412
* EPOXY COATED REINFORCING STEEL				LBS.	1039
CLASS AA CONCRETE				C.Y.	18.6

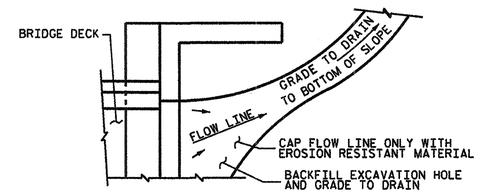

NOTE: IF THE APPROACH SLAB IS NOT CONSTRUCTED IMMEDIATELY AFTER THE BACKFILLING OF THE END BENT EXCAVATION, GRADE TO DRAIN TO THE BOTTOM OF THE SLOPE AND PROVIDE EROSION RESISTANT MATERIAL, SUCH AS FIBERGLASS ROVING OR AS DIRECTED BY THE ENGINEER TO PREVENT SOIL EROSION AND TO PROTECT THE AREA ADJACENT TO THE STRUCTURE. THE CONTRACTOR WILL BE REQUIRED TO REMOVE THESE MATERIALS PRIOR TO CONSTRUCTION OF THE APPROACH SLAB.

TEMPORARY DRAINAGE DETAIL

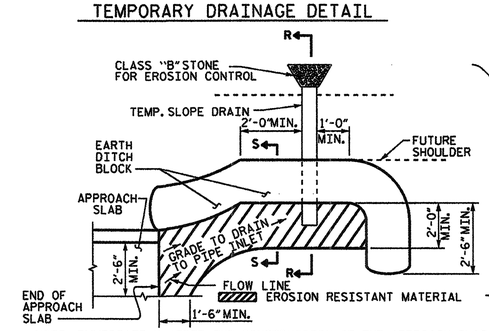

NOTE: IMMEDIATELY AFTER THE CONSTRUCTION OF THE APPROACH SLAB, THE CONTRACTOR SHALL PROVIDE TEMPORARY BERM AND SLOPE DRAIN. CONTRACTOR SHALL GRADE TO PIPE INLET AND PROVIDE EROSION RESISTANT MATERIAL AS SHOWN. THE EROSION RESISTANT MATERIAL SHALL BE EITHER 1) ASPHALT PLANT MIX, TYPE 1 OR TYPE 2, MIN. 2" DEPTH, 2) EROSION CONTROL MAT, OR 3) CONCRETE, AS DIRECTED BY THE ENGINEER. THE SLOPE DRAIN SHALL CONSIST OF A NON-PERFORATED TEMPORARY DRAINAGE PIPE, 12 INCHES IN DIAMETER.

PLAN VIEW

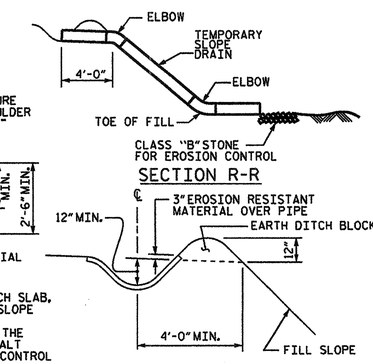

TEMPORARY BERM AND SLOPE DRAIN DETAILS

(TO BE USED WHEN SHOULDER BERM GUTTER IS REQUIRED)

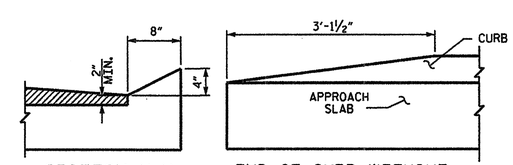

SECTION N-N

END OF CURB WITHOUT SHOULDER BERM GUTTER

CURB DETAILS

PROJECT NO. BD-5104F

WILSON COUNTY

STATION: 13+00.00 -L-

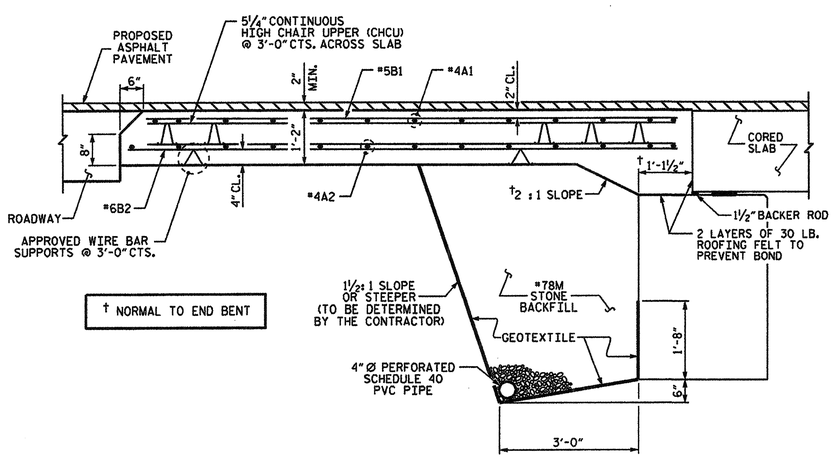

† NORMAL TO END BENT

SECTION THRU SLAB

SPLICE LENGTHS		
BAR SIZE	EPOXY COATED	UNCOATED
#4	2'-0"	1'-9"
#5	2'-6"	2'-2"
#6	3'-10"	2'-7"

NORTH CAROLINA PROFESSIONAL SEAL 14045 ENGINEER TIMOTHY L. BOGGINS

03/08/13

STATE OF NORTH CAROLINA
DEPARTMENT OF TRANSPORTATION
RALEIGH

STANDARD
BRIDGE APPROACH SLAB
FOR PRESTRESSED CONCRETE
CORED SLAB UNIT
(SUB-REGIONAL TIER)
90° SKEW

REVISIONS						SHEET NO.
NO.	BY:	DATE:	NO.	BY:	DATE:	30
1			3			TOTAL SHEETS
2			4			35

ASSEMBLED BY :	N. RUFFIN	DATE :	1/11/13
CHECKED BY :	M. AHMED	DATE :	3/5/13
DRAWN BY : SHS/MAA 5-09	REV. 12-11	MAA/AAC	
CHECKED BY : BCH 5-09			

08-MAR-2013 15:28
S:\DPG\Tim\Division 4 LIBR\BD-5104F\BD5104F_sm_Draft_standards_01.dgn
nruffin

STD. NO. BAS_33_90S

STANDARD NOTES

DESIGN DATA:

SPECIFICATIONS	A.A.S.H.T.O. (CURRENT)
LIVE LOAD	SEE PLANS
IMPACT ALLOWANCE	SEE A.A.S.H.T.O.
STRESS IN EXTREME FIBER OF	
STRUCTURAL STEEL - AASHTO M270 GRADE 36	20,000 LBS. PER SQ. IN.
- AASHTO M270 GRADE 50W	27,000 LBS. PER SQ. IN.
- AASHTO M270 GRADE 50	27,000 LBS. PER SQ. IN.
REINFORCING STEEL IN TENSION	
GRADE 60	24,000 LBS. PER SQ. IN.
CONCRETE IN COMPRESSION	1,200 LBS. PER SQ. IN.
CONCRETE IN SHEAR	SEE A.A.S.H.T.O.
STRUCTURAL TIMBER - TREATED OR	
UNTREATED - EXTREME FIBER STRESS	1,800 LBS. PER SQ. IN.
COMPRESSION PERPENDICULAR TO GRAIN OF TIMBER	375 LBS. PER SQ. IN.
EQUIVALENT FLUID PRESSURE OF EARTH	30 LBS. PER CU. FT. (MINIMUM)

MATERIAL AND WORKMANSHIP:

EXCEPT AS MAY OTHERWISE BE SPECIFIED ON PLANS OR IN THE SPECIAL PROVISIONS, ALL MATERIAL AND WORKMANSHIP SHALL BE IN ACCORDANCE WITH THE 2012 "STANDARD SPECIFICATIONS FOR ROADS AND STRUCTURES" OF THE N. C. DEPARTMENT OF TRANSPORTATION.

STEEL SHEET PILING FOR PERMANENT OR TEMPORARY APPLICATIONS SHALL BE HOT ROLLED.

CONCRETE:

UNLESS OTHERWISE REQUIRED ON PLANS, CLASS A CONCRETE SHALL BE USED FOR ALL PORTIONS OF ALL STRUCTURES WITH THE EXCEPTION THAT: CLASS AA CONCRETE SHALL BE USED IN BRIDGE SUPERSTRUCTURES, ABUTMENT BACKWALLS, AND APPROACH SLABS; AND CLASS B CONCRETE SHALL BE USED FOR SLOPE PROTECTION AND RIP RAP.

CONCRETE CHAMFERS:

UNLESS OTHERWISE NOTED ON THE PLANS, ALL EXPOSED CORNERS ON STRUCTURES SHALL BE CHAMFERED 3/4" WITH THE FOLLOWING EXCEPTIONS: TOP CORNERS OF CURBS MAY BE ROUNDED TO 1-1/2" RADIUS WHICH IS BUILT INTO CURB FORMS; CORNERS OF TRANSVERSE FLOOR EXPANSION JOINTS SHALL BE ROUNDED WITH A 1/4" FINISHING TOOL UNLESS OTHERWISE REQUIRED ON PLANS; AND CORNERS OF EXPANSION JOINTS IN THE ROADWAY FACES AND TOPS OF CURBS AND SIDEWALKS SHALL BE ROUNDED TO A 1/4" RADIUS WITH A FINISHING STONE OR TOOL UNLESS OTHERWISE REQUIRED ON PLANS.

DOWELS:

DOWELS WHEN INDICATED ON PLANS AS FOR CULVERT EXTENSIONS, SHALL BE EMBEDDED AT LEAST 12" INTO THE OLD CONCRETE AND GROUTED INTO PLACE WITH 1:2 CEMENT MORTAR.

ALLOWANCE FOR DEAD LOAD DEFLECTION, SETTLEMENT, ETC. IN CASTING SUPERSTRUCTURES:

BRIDGES SHALL BE BUILT ON THE GRADE OR VERTICAL CURVE SHOWN ON PLANS. SLABS, CURBS AND PARAPETS SHALL CONFORM TO THE GRADE OR CURVE.

ALL DIMENSIONS WHICH ARE GIVEN IN SECTION AND ARE AFFECTED BY DEAD LOAD DEFLECTIONS ARE DIMENSIONS AT CENTER LINE OF BEARING UNLESS OTHERWISE NOTED ON PLANS. IN SETTING FORMS FOR STEEL BEAM BRIDGES AND PRESTRESSED CONCRETE GIRDER BRIDGES, ADJUSTMENTS SHALL BE MADE DUE TO THE DEAD LOAD DEFLECTIONS FOR THE ELEVATIONS SHOWN. WHERE BLOCKS ARE SHOWN OVER BEAMS FOR BUILDING UP TO THE SLAB, THE VERTICAL DIMENSIONS OF THE BLOCKS SHALL BE ADJUSTED BETWEEN BEARINGS TO COMPENSATE FOR DEAD LOAD DEFLECTIONS, VERTICAL CURVE ORDINATE, AND ACTUAL BEAM CAMBER. WHERE BOTTOM OF SLAB IS IN LINE WITH BOTTOM OF TOP FLANGES, DEPTH OF SLAB BETWEEN BEARINGS SHALL BE ADJUSTED TO COMPENSATE FOR DEAD LOAD DEFLECTION, VERTICAL CURVE ORDINATE, AND ACTUAL BEAM CAMBER.

IN SETTING FALSEWORK AND FORMS FOR REINFORCED CONCRETE SPANS, AN ALLOWANCE SHALL BE MADE FOR DEAD LOAD DEFLECTIONS, SETTLEMENT OF FALSEWORK, AND PERMANENT CAMBER WHICH SHALL BE PROVIDED FOR IN ADDITION TO THE ELEVATIONS SHOWN. AFTER REMOVAL OF THE FALSEWORK, THE FINISHED STRUCTURES SHALL CONFORM TO THE PROFILE AND ELEVATIONS SHOWN ON THE PLANS AND CONSTRUCTION ELEVATIONS FURNISHED BY THE ENGINEER.

DETAILED DRAWINGS FOR FALSEWORK OR FORMS FOR BRIDGE SUPERSTRUCTURE AND ANY STRUCTURE OR PARTS OF A STRUCTURE AS NOTED ON THE PLANS SHALL BE SUBMITTED TO THE ENGINEER FOR APPROVAL BEFORE CONSTRUCTION OF THE FALSEWORK OR FORMS IS STARTED.

REINFORCING STEEL:

ALL REINFORCING STEEL SHALL BE DEFORMED. DIMENSIONS RELATIVE TO PLACEMENT OF REINFORCING ARE TO CENTERS OF BARS UNLESS OTHERWISE INDICATED IN THE PLANS. DIMENSIONS ON BAR DETAILS ARE TO CENTERS OF BARS OR ARE OUT TO OUT AS INDICATED ON PLANS.

WIRE BAR SUPPORTS SHALL BE PROVIDED FOR REINFORCING STEEL WHERE INDICATED ON THE PLANS. WHEN BAR SUPPORT PIECES ARE PLACED IN CONTINUOUS LINES, THEY SHALL BE SO PLACED THAT THE ENDS OF THE SUPPORTING WIRES SHALL BE LAPPED TO LOCK LEGS ON ADJOINING PIECES.

STRUCTURAL STEEL:

AT THE CONTRACTOR'S OPTION, HE MAY SUBSTITUTE 7/8" Ø SHEAR STUDS FOR THE 3/4" Ø STUDS SPECIFIED ON THE PLANS. THIS SUBSTITUTION SHALL BE MADE AT THE RATE OF 3 - 7/8" Ø STUDS FOR 4 - 3/4" Ø STUDS, AND STUD SPACING CHANGES SHALL BE MADE AS NECESSARY TO PROVIDE THE SAME EQUIVALENT NUMBER OF 7/8" Ø STUDS ALONG THE BEAM AS SHOWN FOR 3/4" Ø STUDS BASED ON THE RATIO OF 3 - 7/8" Ø STUDS FOR 4 - 3/4" Ø STUDS. STUDS OF THE LENGTH SPECIFIED ON THE PLANS MUST BE PROVIDED. THE MAXIMUM SPACING SHALL BE 2'-0".

EXCEPT AT THE INTERIOR SUPPORTS OF CONTINUOUS BEAMS WHERE THE COVER PLATE IS IN CONTACT WITH BEARING PLATE, THE CONTRACTOR MAY, AT HIS OPTION, SUBSTITUTE FOR THE COVER PLATES DESIGNATED ON THE PLANS COVER PLATES OF THE EQUIVALENT AREA PROVIDED THESE PLATES ARE AT LEAST 5/16" IN THICKNESS AND DO NOT EXCEED A WIDTH EQUAL TO THE FLANGE WIDTH LESS 2" OR A THICKNESS EQUAL TO 2 TIMES THE FLANGE THICKNESS. THE SIZE OF FILLET WELDS SHALL CONFORM TO THE REQUIREMENTS OF THE CURRENT ANSI/AASHTO/AWS "BRIDGE WELDING CODE". ELECTROSLAG WELDING WILL NOT BE PERMITTED.

WITH THE SOLE EXCEPTION OF EDGES AT SURFACES WHICH BEAR ON OTHER SURFACES, ALL SHARP EDGES AND ENDS OF SHAPES AND PLATES SHALL BE SLIGHTLY ROUNDED BY SUITABLE MEANS TO A RADIUS OF APPROXIMATELY 1/16 INCH OR EQUIVALENT FLAT SURFACE AT A SUITABLE ANGLE PRIOR TO PAINTING, GALVANIZING, OR METALLIZING.

HANDRAILS AND POSTS:

METAL STANDARDS AND FACES OF THE CONCRETE END POSTS FOR THE METAL RAIL SHALL BE SET NORMAL TO THE GRADE OF THE CURB, UNLESS OTHERWISE SHOWN ON PLANS. THE METAL RAIL AND TOPS OF CONCRETE POSTS USED WITH THE ALUMINUM RAIL SHALL BE BUILT PARALLEL TO THE GRADE OF THE CURB.

METAL HANDRAILS SHALL BE IN ACCORDANCE WITH THE PLANS. RAILS SHALL BE AS MANUFACTURED FOR BRIDGE RAILING. CASTINGS SHALL BE OF A UNIFORM APPEARANCE. FINS AND OTHER DEFORMATIONS RESULTING FROM CASTING OR OTHERWISE SHALL BE REMOVED IN A MANNER SO THAT A UNIFORM COLORING OF THE COMPLETED CASTING SHALL BE OBTAINED. CASTINGS WITH DISCOLORATIONS OR OF NON-UNIFORM COLORING WILL NOT BE ACCEPTED. CERTIFIED MILL REPORTS ARE REQUIRED FOR METAL RAILS AND POSTS.

SPECIAL NOTES:

GENERALLY, IN CASE OF DISCREPANCY, THIS STANDARD SHEET OF NOTES SHALL GOVERN OVER THE SPECIFICATIONS, BUT THE REMAINDER OF THE PLANS SHALL GOVERN OVER NOTES HEREON, AND SPECIAL PROVISIONS SHALL GOVERN OVER ALL. SEE SPECIFICATIONS ARTICLE 105-4.

EROSION CONTROL PLAN

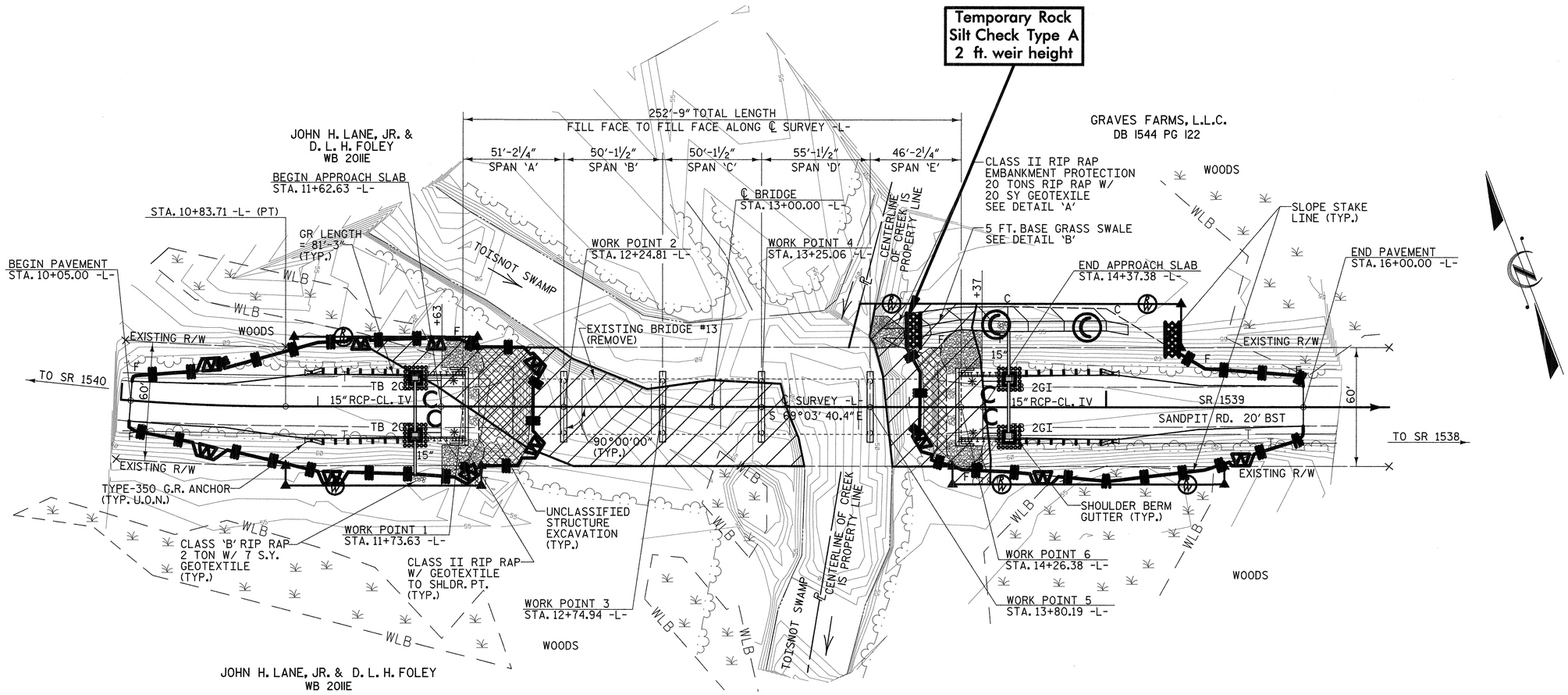

PLAN

SCALE: 1" = 30'

THESE EROSION AND SEDIMENT CONTROL PLANS COMPLY WITH THE REGULATIONS SET FORTH BY THE NCG-010000 GENERAL CONSTRUCTION PERMIT EFFECTIVE AUGUST 3, 2011 ISSUED BY THE NORTH CAROLINA DEPARTMENT OF ENVIRONMENT AND NATURAL RESOURCES DIVISION OF WATER QUALITY.

2012 STANDARD DRAWINGS

1604.01	Railroad Erosion Control Detail	1632.01	Rock Inlet Sediment Trap Type A
1605.01	Temporary Silt Fence	1632.02	Rock Inlet Sediment Trap Type B
1606.01	Special Sediment Control Fence	1632.03	Rock Inlet Sediment Trap Type C
1607.01	Gravel Construction Entrance	1633.01	Temporary Rock Silt Check Type A
1622.01	Temporary Berms and Slope Drains	1633.02	Temporary Rock Silt Check Type B
1630.01	Riser Basin	1634.01	Temporary Rock Sediment Dam Type A
1630.02	Silt Basin Type B	1634.02	Temporary Rock Sediment Dam Type B
1630.03	Temporary Silt Ditch	1635.01	Rock Pipe Inlet Sediment Trap Type A
1630.04	Stilling Basin	1635.02	Rock Pipe Inlet Sediment Trap Type B
1630.05	Temporary Diversion	1640.01	Coir Fiber Baffle
1630.06	Special Stilling Basin	1645.01	Temporary Stream Crossing
1631.01	Matting Installation		

ENVIRONMENTALLY SENSITIVE AREA
SEE SPECIAL PROVISION

NOTES: ANY DEVIATION FROM OPTIONS GIVEN WILL REQUIRE PRIOR APPROVAL BY ENGINEER.

ADDITIONAL EROSION CONTROL DEVICES MAY NEED TO BE INSTALLED AS DIRECTED BY THE ENGINEER.

ROADSIDE ENVIRONMENTAL UNIT
DEPARTMENT OF TRANSPORTATION
DIVISION OF HIGHWAYS
RALEIGH, N.C.

2012 STANDARD SPECIFICATIONS

Std. #	Description	Symbol
1605.01	Temporary Silt Fence	
1606.01	Special Sediment Control Fence	
1607.01	Gravel Construction Entrance	
1622.01	Temporary Berms and Slope Drains	
1632.03	Rock Inlet Sediment Trap Type C	
1633.01	Temporary Rock Silt Check Type-A	
	Wattle with Polyacrylamide (PAM)	

PROJECT NO. BD-5104F
WILSON COUNTY
STATION: 13+00.00 -L-

REPLACES BRIDGE NO. 13

STATE OF NORTH CAROLINA
DEPARTMENT OF TRANSPORTATION
RALEIGH

BRIDGE ON SR 1539
OVER TOISNOT SWAMP
BETWEEN SR 1540
& SR 1538

30'-10" CLEAR ROADWAY - 90° SKEW

REVISIONS						SHEET NO.
NO.	BY:	DATE:	NO.	BY:	DATE:	EC-1
1			3			TOTAL SHEETS
2			4			35

4/3/2013 1:27:18 AM R:\Structures\Erosion Control\BD5104F_SD_EC_01.dgn

WATTLE WITH POLYACRYLAMIDE (PAM) DETAIL

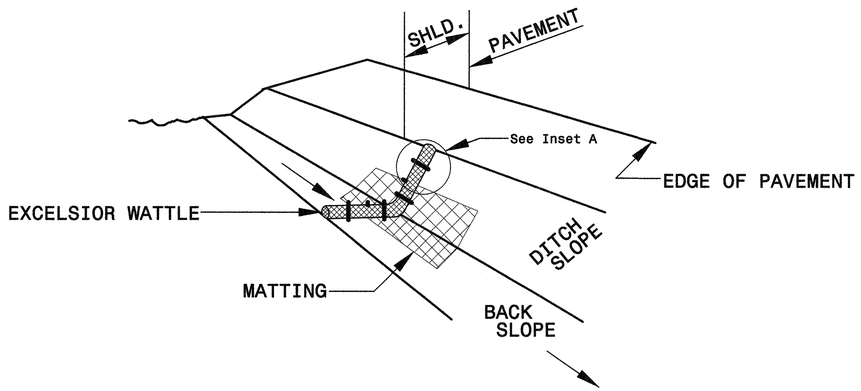

ISOMETRIC VIEW

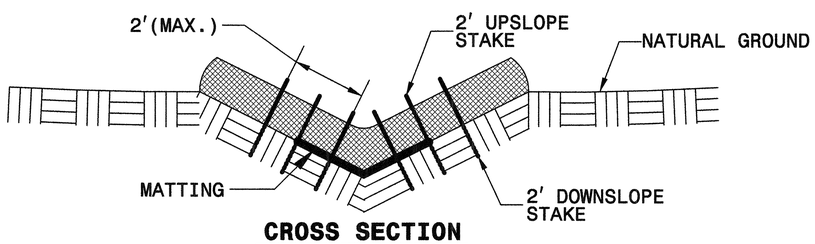

CROSS SECTION
VEE DITCH

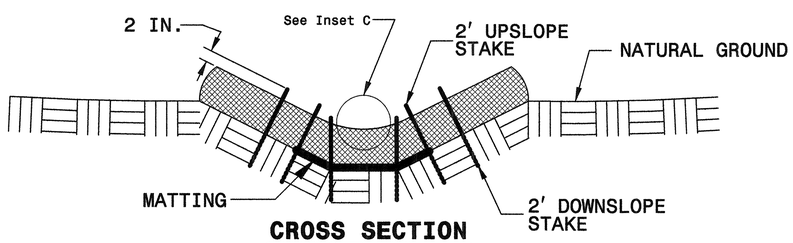

CROSS SECTION
TRAPEZOIDAL DITCH

NOTES:

USE MINIMUM 12 IN. DIAMETER EXCELSIOR WATTLE.

USE 2 FT. WOODEN STAKES WITH A 2 IN. BY 2 IN. NOMINAL CROSS SECTION.

ONLY INSTALL WATTLE(S) TO A HEIGHT IN DITCH SO FLOW WILL NOT WASH AROUND WATTLE AND SCOUR DITCH SLOPES AND AS DIRECTED.

INSTALL A MINIMUM OF 2 UPSLOPE STAKES AND 4 DOWNSLOPE STAKES AT AN ANGLE TO WEDGE WATTLE TO BOTTOM OF DITCH.

PROVIDE STAPLES MADE OF 0.125 IN. DIAMETER STEEL WIRE FORMED INTO A U SHAPE NOT LESS THAN 12″ IN LENGTH.

INSTALL STAPLES APPROXIMATELY EVERY 1 LINEAR FOOT ON BOTH SIDES OF WATTLE AND AT EACH END TO SECURE IT TO THE SOIL.

INSTALL MATTING IN ACCORDANCE WITH SECTION 1631 OF THE STANDARD SPECIFICATIONS.

PRIOR TO POLYACRYLAMIDE (PAM) APPLICATION, OBTAIN A SOIL SAMPLE FROM PROJECT LOCATION, AND FROM OFFSITE MATERIAL, AND ANALYZE FOR APPROPRIATE PAM FLOCCULANT TO BE APPLIED TO EACH WATTLE.

INITIALLY APPLY 2 OUNCES OF ANIONIC OR NEUTRALLY CHARGED PAM OVER WATTLE WHERE WATER WILL FLOW AND 1 OUNCE OF PAM ON MATTING ON EACH SIDE OF WATTLE. REAPPLY PAM AFTER EVERY RAINFALL EVENT THAT IS EQUAL TO OR EXCEEDS 0.50 IN.

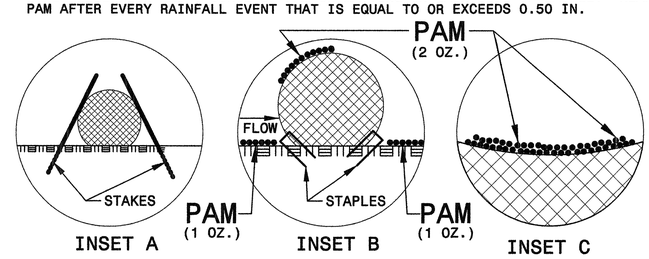

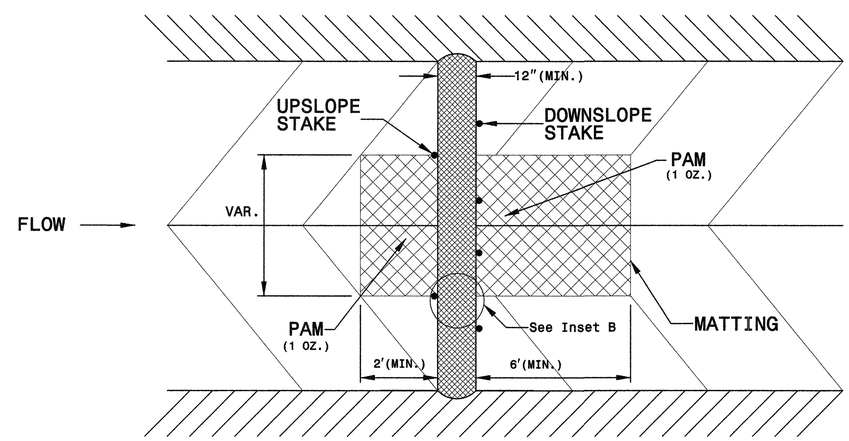

TOP VIEW

NOTES: ANY DEVIATION FROM OPTIONS GIVEN WILL REQUIRE PRIOR APPROVAL BY ENGINEER.

ADDITIONAL EROSION CONTROL DEVICES MAY NEED TO BE INSTALLED AS DIRECTED BY THE ENGINEER.

ROADSIDE ENVIRONMENTAL UNIT
DEPARTMENT OF TRANSPORTATION
DIVISION OF HIGHWAYS
RALEIGH, N.C.

2012 STANDARD SPECIFICATIONS

PROJECT NO. BD-5104F
WILSON COUNTY
STATION: 13+00.00 -L-

REPLACES BRIDGE NO. 13

STATE OF NORTH CAROLINA
DEPARTMENT OF TRANSPORTATION
RALEIGH

BRIDGE ON SR 1539
OVER TOISNOT SWAMP
BETWEEN SR 1540
& SR 1538

30′-10″ CLEAR ROADWAY - 90° SKEW

REVISIONS						SHEET NO.
NO.	BY:	DATE:	NO.	BY:	DATE:	EC-2
1			3			TOTAL SHEETS
2			4			35

4/3/2013 7:27:28 AM R:\Structures\Erosion Control\BD5104F_SD_EC_01.dgn

DIVISION OF HIGHWAYS
STATE OF NORTH CAROLINA

SOIL STABILIZATION TIMEFRAMES

SITE DESCRIPTION	STABILIZATION TIME	TIMEFRAME EXCEPTIONS
PERIMETER DIKES, SWALES, DITCHES AND SLOPES	7 DAYS	NONE
HIGH QUALITY WATER (HQW) ZONES	7 DAYS	NONE
SLOPES STEEPER THAN 3:1	7 DAYS	IF SLOPES ARE 10' OR LESS IN LENGTH AND ARE NOT STEEPER THAN 2:1, 14 DAYS ARE ALLOWED.
SLOPES 3:1 OR FLATTER	14 DAYS	7 DAYS FOR SLOPES GREATER THAN 50' IN LENGTH.
ALL OTHER AREAS WITH SLOPES FLATTER THAN 4:1	14 DAYS	NONE, EXCEPT FOR PERIMETERS AND HQW ZONES.

PROJECT NO. BD-5104F
WILSON COUNTY
STATION: 13+00.00 -L-

REPLACES BRIDGE NO. 13

NOTES: ANY DEVIATION FROM OPTIONS GIVEN WILL REQUIRE PRIOR APPROVAL BY ENGINEER.

ADDITIONAL EROSION CONTROL DEVICES MAY NEED TO BE INSTALLED AS DIRECTED BY THE ENGINEER.

ROADSIDE ENVIRONMENTAL UNIT
DEPARTMENT OF TRANSPORTATION
DIVISION OF HIGHWAYS
RALEIGH, N.C.

2012 STANDARD SPECIFICATIONS

STATE OF NORTH CAROLINA
DEPARTMENT OF TRANSPORTATION
RALEIGH

BRIDGE ON SR 1539
OVER TOISNOT SWAMP
BETWEEN SR 1540
& SR 1538

30'-10" CLEAR ROADWAY - 90° SKEW

REVISIONS						SHEET NO.
NO.	BY:	DATE:	NO.	BY:	DATE:	EC-3
1			3			TOTAL SHEETS
2			4			35

4/3/2013 7:27:37 AM R:\Structures\Erosion Control\BD5104F_SD_EC_01.dgn

PROJECT REFERENCE NO.	SHEET NO.
BD-5104F	EC-4
R/W SHEET NO.	
ROADWAY DESIGN ENGINEER	HYDRAULICS ENGINEER

PLANTING DETAILS

SEEDLING / LINER BAREROOT PLANTING DETAIL

HEALING IN

1. Locate a healing-in site in a shady, well protected area.
2. Excavate a flat bottom trench 12 inches deep and provide drainage.

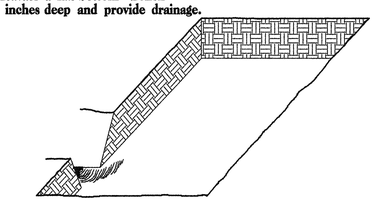

3. Backfill the trench with 2 inches well rotted sawdust. Place a 2 inch layer of well rotted sawdust at a sloping angle at one end of the trench.

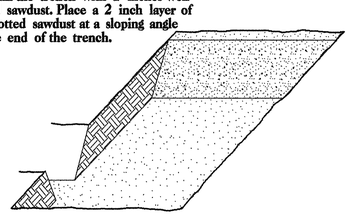

4. Place a single layer of plants against the sloping end so that the root collar is at ground level.

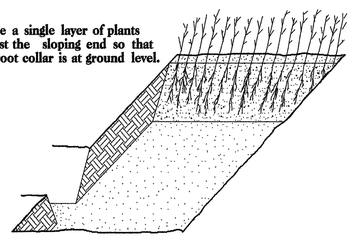

5. Place a 2 inch layer of well rotted sawdust over the roots maintaining a sloping angle.

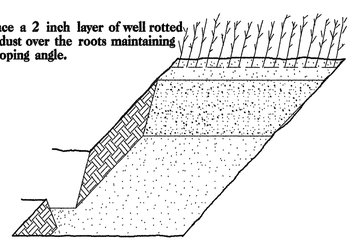

6. Repeat layers of plants and sawdust as necessary and water thoroughly.

DIBBLE PLANTING METHOD
USING THE KBC PLANTING BAR

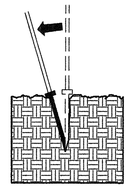

1. Insert planting bar as shown and pull handle toward planter.

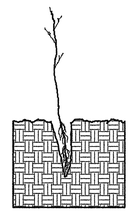

2. Remove planting bar and place seedling at correct depth.

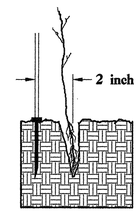

3. Insert planting bar 2 inches toward planter from seedling.

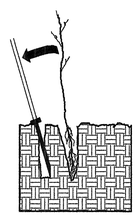

4. Pull handle of bar toward planter, firming soil at bottom.

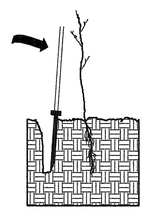

5. Push handle forward firming soil at top.

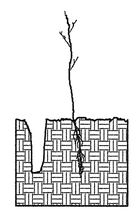

6. Leave compaction hole open. Water thoroughly.

PLANTING NOTES:

PLANTING BAG
During planting, seedlings shall be kept in a moist canvas bag or similar container to prevent the root systems from drying.

KBC PLANTING BAR
Planting bar shall have a blade with a triangular cross section, and shall be 12 inches long, 4 inches wide and 1 inch thick at center.

ROOT PRUNING
All seedlings shall be root pruned, if necessary, so that no roots extend more than 10 inches below the root collar.

REFORESTATION

☐ TREE REFORESTATION SHALL BE PLANTED 6 FT. TO 10 FT. ON CENTER, RANDOM SPACING, AVERAGING 8 FT. ON CENTER, APPROXIMATELY 680 PLANTS PER ACRE.

REFORESTATION

MIXTURE, TYPE, SIZE, AND FURNISH SHALL CONFORM TO THE FOLLOWING:

34% PLATANUS OCCIDENTALIS	AMERICAN SYCAMORE	12 in - 18 in BR
33% LIRIODENDRON TULIPIFERA	YELLOW POPLAR	12 in - 18 in BR
33% FRAXINUS PENNSYLVANICA	GREEN ASH	12 in - 18 in BR

NOTES: ANY DEVIATION FROM OPTIONS GIVEN WILL REQUIRE PRIOR APPROVAL BY ENGINEER.

ADDITIONAL EROSION CONTROL DEVICES MAY NEED TO BE INSTALLED AS DIRECTED BY THE ENGINEER.

ROADSIDE ENVIRONMENTAL UNIT
DEPARTMENT OF TRANSPORTATION
DIVISION OF HIGHWAYS
RALEIGH, N.C.

2012 STANDARD SPECIFICATIONS

REFORESTATION DETAIL SHEET

N.C.D.O.T. - ROADSIDE ENVIRONMENTAL UNIT

STATE	STATE PROJECT REFERENCE NO.	SHEET NO.	TOTAL SHEETS
N.C.	BD-5104F	1	7

STATE OF NORTH CAROLINA
DEPARTMENT OF TRANSPORTATION
DIVISION OF HIGHWAYS
GEOTECHNICAL ENGINEERING UNIT

STRUCTURE SUBSURFACE INVESTIGATION

PROJ. REFERENCE NO. 45350.1.7 (BD-5104F) F.A. PROJ. _____

COUNTY WILSON

PROJECT DESCRIPTION BRIDGE NO. 13 ON SR 1539 (SAND PIT ROAD) OVER TOISNOT SWAMP AT -L- STA. 13+00

PROJECT: 45350.1.7 ID: BD-5104F

CONTENTS

SHEET	DESCRIPTION
1	TITLE SHEET
2	LEGEND
3	SITE PLAN
4	PROFILE
5-7	BORE LOGS

CAUTION NOTICE

THE SUBSURFACE INFORMATION AND THE SUBSURFACE INVESTIGATION ON WHICH IT IS BASED WERE MADE FOR THE PURPOSE OF STUDY, PLANNING, AND DESIGN, AND NOT FOR CONSTRUCTION OR PAY PURPOSES. THE VARIOUS FIELD BORING LOGS, ROCK CORES, AND SOIL TEST DATA AVAILABLE MAY BE REVIEWED OR INSPECTED IN RALEIGH BY CONTACTING THE N.C. DEPARTMENT OF TRANSPORTATION, GEOTECHNICAL ENGINEERING UNIT AT (919) 707-6850. NEITHER THE SUBSURFACE PLANS AND REPORTS, NOR THE FIELD BORING LOGS, ROCK CORES, OR SOIL TEST DATA ARE PART OF THE CONTRACT.

GENERAL SOIL AND ROCK STRATA DESCRIPTIONS AND INDICATED BOUNDARIES ARE BASED ON A GEOTECHNICAL INTERPRETATION OF ALL AVAILABLE SUBSURFACE DATA AND MAY NOT NECESSARILY REFLECT THE ACTUAL SUBSURFACE CONDITIONS BETWEEN BORINGS OR BETWEEN SAMPLED STRATA WITHIN THE BOREHOLE. THE LABORATORY SAMPLE DATA AND THE IN SITU IN-PLACE TEST DATA CAN BE RELIED ON ONLY TO THE DEGREE OF RELIABILITY INHERENT IN THE STANDARD TEST METHOD. THE OBSERVED WATER LEVELS OR SOIL MOISTURE CONDITIONS INDICATED IN THE SUBSURFACE INVESTIGATIONS ARE AS RECORDED AT THE TIME OF THE INVESTIGATION. THESE WATER LEVELS OR SOIL MOISTURE CONDITIONS MAY VARY CONSIDERABLY WITH TIME ACCORDING TO CLIMATIC CONDITIONS INCLUDING TEMPERATURES, PRECIPITATION, AND WIND, AS WELL AS OTHER NON-CLIMATIC FACTORS.

THE BIDDER OR CONTRACTOR IS CAUTIONED THAT DETAILS SHOWN ON THE SUBSURFACE PLANS ARE PRELIMINARY ONLY AND IN MANY CASES THE FINAL DESIGN DETAILS ARE DIFFERENT. FOR BIDDING AND CONSTRUCTION PURPOSES, REFER TO THE CONSTRUCTION PLANS AND DOCUMENTS FOR FINAL DESIGN INFORMATION ON THIS PROJECT. THE DEPARTMENT DOES NOT WARRANT OR GUARANTEE THE SUFFICIENCY OR ACCURACY OF THE INVESTIGATION MADE, NOR THE INTERPRETATIONS MADE, OR OPINION OF THE DEPARTMENT AS TO THE TYPE OF MATERIALS AND CONDITIONS TO BE ENCOUNTERED. THE BIDDER OR CONTRACTOR IS CAUTIONED TO MAKE SUCH INDEPENDENT SUBSURFACE INVESTIGATIONS AS HE DEEMS NECESSARY TO SATISFY HIMSELF AS TO CONDITIONS TO BE ENCOUNTERED ON THIS PROJECT. THE CONTRACTOR SHALL HAVE NO CLAIM FOR ADDITIONAL COMPENSATION OR FOR AN EXTENSION OF TIME FOR ANY REASON RESULTING FROM THE ACTUAL CONDITIONS ENCOUNTERED AT THE SITE DIFFERING FROM THOSE INDICATED IN THE SUBSURFACE INFORMATION.

PERSONNEL

C.M. WRIKE

R.E. SMITH

D.G. PINTER

INVESTIGATED BY J.L. STONE

CHECKED BY D.N. ARGENBRIGHT

SUBMITTED BY D.N. ARGENBRIGHT

DATE JANUARY 2013

NORTH CAROLINA LICENSED SEAL 2007 GEOLOGIST JOSEPH L. STONE

DRAWN BY: C.P. TURNER

NOTE - THE INFORMATION CONTAINED HEREIN IS NOT IMPLIED OR GUARANTEED BY THE N.C. DEPARTMENT OF TRANSPORTATION AS BEING ACCURATE NOR IT IS CONSIDERED TO BE PART OF THE PLANS.

NOTE - BY HAVING REQUESTED THIS INFORMATION THE CONTRACTOR SPECIFICALLY WAIVES ANY CLAIMS FOR INCREASED COMPENSATION OR EXTENSION OF TIME BASED ON DIFFERENCES BETWEEN THE

PROJECT REFERENCE NO.	SHEET NO.
BD-5104F	2

NORTH CAROLINA DEPARTMENT OF TRANSPORTATION
DIVISION OF HIGHWAYS
GEOTECHNICAL ENGINEERING UNIT

SUBSURFACE INVESTIGATION

SOIL AND ROCK LEGEND, TERMS, SYMBOLS, AND ABBREVIATIONS

SOIL DESCRIPTION

SOIL IS CONSIDERED TO BE THE UNCONSOLIDATED, SEMI-CONSOLIDATED, OR WEATHERED EARTH MATERIALS THAT CAN BE PENETRATED WITH A CONTINUOUS FLIGHT POWER AUGER, AND YIELD LESS THAN 100 BLOWS PER FOOT ACCORDING TO STANDARD PENETRATION TEST (AASHTO T206, ASTM D-1586). SOIL CLASSIFICATION IS BASED ON THE AASHTO SYSTEM. BASIC DESCRIPTIONS GENERALLY SHALL INCLUDE: CONSISTENCY, COLOR, TEXTURE, MOISTURE, AASHTO CLASSIFICATION, AND OTHER PERTINENT FACTORS SUCH AS MINERALOGICAL COMPOSITION, ANGULARITY, STRUCTURE, PLASTICITY, ETC. EXAMPLE:

VERY STIFF, GRAY, SILTY CLAY, MOIST WITH INTERBEDDED FINE SAND LAYERS, HIGHLY PLASTIC, A-7-6

SOIL LEGEND AND AASHTO CLASSIFICATION

GENERAL CLASS.	GRANULAR MATERIALS (≤ 35% PASSING #200)							SILT-CLAY MATERIALS (> 35% PASSING #200)				ORGANIC MATERIALS		
GROUP CLASS.	A-1		A-3	A-2				A-4	A-5	A-6	A-7	A-1, A-2, A-3	A-4, A-5, A-6, A-7	
	A-1-a	A-1-b		A-2-4	A-2-5	A-2-6	A-2-7				A-7-5 A-7-6			
SYMBOL														
% PASSING #10	50 MX											GRANULAR SOILS	SILT-CLAY SOILS	MUCK, PEAT
#40	30 MX	50 MX	51 MN											
#200	15 MX	25 MX	10 MX	35 MX	35 MX	35 MX	35 MX	36 MN	36 MN	36 MN	36 MN			
LIQUID LIMIT	6 MX		NP	40 MX	41 MN	40 MX	41 MN	40 MX	41 MN	40 MX	41 MN	SOILS WITH LITTLE OR MODERATE AMOUNTS OF ORGANIC MATTER		HIGHLY ORGANIC SOILS
PLASTIC INDEX				10 MX	10 MX	11 MN	11 MN	10 MX	10 MX	11 MN	11 MN			
GROUP INDEX	0		0	0		4 MX		8 MX	12 MX	16 MX	No MX			
USUAL TYPES OF MAJOR MATERIALS	STONE FRAGS., GRAVEL, AND SAND		FINE SAND	SILTY OR CLAYEY GRAVEL AND SAND				SILTY SOILS		CLAYEY SOILS				
GEN. RATING AS A SUBGRADE	EXCELLENT TO GOOD							FAIR TO POOR				FAIR TO POOR	POOR	UNSUITABLE

PI OF A-7-5 SUBGROUP IS ≤ LL - 30 ; PI OF A-7-6 SUBGROUP IS > LL - 30

CONSISTENCY OR DENSENESS

PRIMARY SOIL TYPE	COMPACTNESS OR CONSISTENCY	RANGE OF STANDARD PENETRATION RESISTENCE (N-VALUE)	RANGE OF UNCONFINED COMPRESSIVE STRENGTH (TONS/FT²)
GENERALLY GRANULAR MATERIAL (NON-COHESIVE)	VERY LOOSE	<4	N/A
	LOOSE	4 TO 10	
	MEDIUM DENSE	10 TO 30	
	DENSE	30 TO 50	
	VERY DENSE	>50	
GENERALLY SILT-CLAY MATERIAL (COHESIVE)	VERY SOFT	<2	<0.25
	SOFT	2 TO 4	0.25 TO 0.50
	MEDIUM STIFF	4 TO 8	0.5 TO 1.0
	STIFF	8 TO 15	1 TO 2
	VERY STIFF	15 TO 30	2 TO 4
	HARD	>30	>4

TEXTURE OR GRAIN SIZE

U.S. STD. SIEVE SIZE	4	10	40	60	200	270
OPENING (MM)	4.76	2.00	0.42	0.25	0.075	0.053

BOULDER (BLDR.)	COBBLE (COB.)	GRAVEL (GR.)	COARSE SAND (CSE. SD.)	FINE SAND (F SD.)	SILT (SL.)	CLAY (CL.)

GRAIN SIZE	MM	305	75	2.0	0.25	0.05	0.005
	IN.	12	3				

SOIL MOISTURE - CORRELATION OF TERMS

SOIL MOISTURE SCALE (ATTERBERG LIMITS)	FIELD MOISTURE DESCRIPTION	GUIDE FOR FIELD MOISTURE DESCRIPTION
	- SATURATED - (SAT.)	USUALLY LIQUID; VERY WET, USUALLY FROM BELOW THE GROUND WATER TABLE
LL — LIQUID LIMIT		
PLASTIC RANGE (PI)	- WET - (W)	SEMISOLID; REQUIRES DRYING TO ATTAIN OPTIMUM MOISTURE
PL — PLASTIC LIMIT		
OM — OPTIMUM MOISTURE	- MOIST - (M)	SOLID; AT OR NEAR OPTIMUM MOISTURE
SL — SHRINKAGE LIMIT		
	- DRY - (D)	REQUIRES ADDITIONAL WATER TO ATTAIN OPTIMUM MOISTURE

PLASTICITY

	PLASTICITY INDEX (PI)	DRY STRENGTH
NONPLASTIC	0-5	VERY LOW
LOW PLASTICITY	6-15	SLIGHT
MED. PLASTICITY	16-25	MEDIUM
HIGH PLASTICITY	26 OR MORE	HIGH

COLOR

DESCRIPTIONS MAY INCLUDE COLOR OR COLOR COMBINATIONS (TAN, RED, YELLOW-BROWN, BLUE-GRAY). MODIFIERS SUCH AS LIGHT, DARK, STREAKED, ETC. ARE USED TO DESCRIBE APPEARANCE.

GRADATION

WELL GRADED - INDICATES A GOOD REPRESENTATION OF PARTICLE SIZES FROM FINE TO COARSE.
UNIFORM - INDICATES THAT SOIL PARTICLES ARE ALL APPROXIMATELY THE SAME SIZE. (ALSO POORLY GRADED)
GAP-GRADED - INDICATES A MIXTURE OF UNIFORM PARTICLES OF TWO OR MORE SIZES.

ANGULARITY OF GRAINS

THE ANGULARITY OR ROUNDNESS OF SOIL GRAINS IS DESIGNATED BY THE TERMS: ANGULAR, SUBANGULAR, SUBROUNDED, OR ROUNDED.

MINERALOGICAL COMPOSITION

MINERAL NAMES SUCH AS QUARTZ, FELDSPAR, MICA, TALC, KAOLIN, ETC. ARE USED IN DESCRIPTIONS WHENEVER THEY ARE CONSIDERED OF SIGNIFICANCE.

COMPRESSIBILITY

SLIGHTLY COMPRESSIBLE	LIQUID LIMIT LESS THAN 31
MODERATELY COMPRESSIBLE	LIQUID LIMIT EQUAL TO 31-50
HIGHLY COMPRESSIBLE	LIQUID LIMIT GREATER THAN 50

PERCENTAGE OF MATERIAL

ORGANIC MATERIAL	GRANULAR SOILS	SILT - CLAY SOILS	OTHER MATERIAL	
TRACE OF ORGANIC MATTER	2 - 3%	3 - 5%	TRACE	1 - 10%
LITTLE ORGANIC MATTER	3 - 5%	5 - 12%	LITTLE	10 - 20%
MODERATELY ORGANIC	5 - 10%	12 - 20%	SOME	20 - 35%
HIGHLY ORGANIC	>10%	>20%	HIGHLY	35% AND ABOVE

GROUND WATER

- WATER LEVEL IN BORE HOLE IMMEDIATELY AFTER DRILLING
- STATIC WATER LEVEL AFTER 24 HOURS
- PW — PERCHED WATER, SATURATED ZONE, OR WATER BEARING STRATA
- SPRING OR SEEP

MISCELLANEOUS SYMBOLS

- ROADWAY EMBANKMENT (RE) WITH SOIL DESCRIPTION
- SOIL SYMBOL
- ARTIFICIAL FILL (AF) OTHER THAN ROADWAY EMBANKMENT
- INFERRED SOIL BOUNDARY
- INFERRED ROCK LINE
- ALLUVIAL SOIL BOUNDARY
- 25/025 DIP & DIP DIRECTION OF ROCK STRUCTURES
- TEST BORING (SPT, DPT, VST, PMT)
- AUGER BORING
- CORE BORING
- MONITORING WELL
- PIEZOMETER INSTALLATION
- SLOPE INDICATOR INSTALLATION
- CONE PENETROMETER TEST
- SOUNDING ROD
- TEST BORING W/ CORE
- SPT N-VALUE
- REF — SPT REFUSAL

ABBREVIATIONS

AR - AUGER REFUSAL	MED. - MEDIUM	VST - VANE SHEAR TEST
BT - BORING TERMINATED	MICA. - MICACEOUS	WEA. - WEATHERED
CL. - CLAY	MOD. - MODERATELY	γ - UNIT WEIGHT
CPT - CONE PENETRATION TEST	NP - NON PLASTIC	γ_d - DRY UNIT WEIGHT
CSE. - COARSE	ORG. - ORGANIC	
DMT - DILATOMETER TEST	PMT - PRESSUREMETER TEST	SAMPLE ABBREVIATIONS
DPT - DYNAMIC PENETRATION TEST	SAP. - SAPROLITIC	S - BULK
e - VOID RATIO	SD. - SAND, SANDY	SS - SPLIT SPOON
F - FINE	SL. - SILT, SILTY	ST - SHELBY TUBE
FOSS. - FOSSILIFEROUS	SLI. - SLIGHTLY	RS - ROCK
FRAC. - FRACTURED, FRACTURES	TCR - TRICONE REFUSAL	RT - RECOMPACTED TRIAXIAL
FRAGS. - FRAGMENTS	w - MOISTURE CONTENT	CBR - CALIFORNIA BEARING RATIO
HI. - HIGHLY	V - VERY	

EQUIPMENT USED ON SUBJECT PROJECT

DRILL UNITS:	ADVANCING TOOLS:	HAMMER TYPE:
[ ] MOBILE B-___	[ ] CLAY BITS	[X] AUTOMATIC [ ] MANUAL
[ ] BK-51	[ ] 6" CONTINUOUS FLIGHT AUGER	CORE SIZE:
[ ] CME-45C	[ ] 8" HOLLOW AUGERS	[ ] -B___
[X] CME-550	[ ] HARD FACED FINGER BITS	[ ] -N___
[ ] PORTABLE HOIST	[ ] TUNG.-CARBIDE INSERTS	[ ] -H___
[ ] ___	[X] CASING [ ] W/ ADVANCER	HAND TOOLS:
[ ] ___	[X] TRICONE 2 15/16" STEEL TEETH	[ ] POST HOLE DIGGER
	[ ] TRICONE ___" TUNG.-CARB.	[ ] HAND AUGER
	[ ] CORE BIT	[ ] SOUNDING ROD
	[ ] ___	[ ] VANE SHEAR TEST
		[ ] ___

ROCK DESCRIPTION

HARD ROCK IS NON-COASTAL PLAIN MATERIAL THAT IF TESTED, WOULD YIELD SPT REFUSAL. AN INFERRED ROCK LINE INDICATES THE LEVEL AT WHICH NON-COASTAL PLAIN MATERIAL WOULD YIELD SPT REFUSAL. SPT REFUSAL IS PENETRATION BY A SPLIT SPOON SAMPLER EQUAL TO OR LESS THAN 0.1 FOOT PER 60 BLOWS. IN NON-COASTAL PLAIN MATERIAL, THE TRANSITION BETWEEN SOIL AND ROCK IS OFTEN REPRESENTED BY A ZONE OF WEATHERED ROCK.
ROCK MATERIALS ARE TYPICALLY DIVIDED AS FOLLOWS:

WEATHERED ROCK (WR)		NON-COASTAL PLAIN MATERIAL THAT WOULD YIELD SPT N VALUES > 100 BLOWS PER FOOT IF TESTED.
CRYSTALLINE ROCK (CR)		FINE TO COARSE GRAIN IGNEOUS AND METAMORPHIC ROCK THAT WOULD YIELD SPT REFUSAL IF TESTED. ROCK TYPE INCLUDES GRANITE, GNEISS, GABBRO, SCHIST, ETC.
NON-CRYSTALLINE ROCK (NCR)		FINE TO COARSE GRAIN METAMORPHIC AND NON-COASTAL PLAIN SEDIMENTARY ROCK THAT WOULD YEILD SPT REFUSAL IF TESTED. ROCK TYPE INCLUDES PHYLLITE, SLATE, SANDSTONE, ETC.
COASTAL PLAIN SEDIMENTARY ROCK (CP)		COASTAL PLAIN SEDIMENTS CEMENTED INTO ROCK, BUT MAY NOT YIELD SPT REFUSAL. ROCK TYPE INCLUDES LIMESTONE, SANDSTONE, CEMENTED SHELL BEDS, ETC.

WEATHERING

FRESH	ROCK FRESH, CRYSTALS BRIGHT, FEW JOINTS MAY SHOW SLIGHT STAINING. ROCK RINGS UNDER HAMMER IF CRYSTALLINE.
VERY SLIGHT (V SLI.)	ROCK GENERALLY FRESH, JOINTS STAINED, SOME JOINTS MAY SHOW THIN CLAY COATINGS IF OPEN. CRYSTALS ON A BROKEN SPECIMEN FACE SHINE BRIGHTLY. ROCK RINGS UNDER HAMMER BLOWS IF OF A CRYSTALLINE NATURE.
SLIGHT (SLI.)	ROCK GENERALLY FRESH, JOINTS STAINED AND DISCOLORATION EXTENDS INTO ROCK UP TO 1 INCH. OPEN JOINTS MAY CONTAIN CLAY. IN GRANITOID ROCKS SOME OCCASIONAL FELDSPAR CRYSTALS ARE DULL AND DISCOLORED. CRYSTALLINE ROCKS RING UNDER HAMMER BLOWS.
MODERATE (MOD.)	SIGNIFICANT PORTIONS OF ROCK SHOW DISCOLORATION AND WEATHERING EFFECTS. IN GRANITOID ROCKS, MOST FELDSPARS ARE DULL AND DISCOLORED, SOME SHOW CLAY. ROCK HAS DULL SOUND UNDER HAMMER BLOWS AND SHOWS SIGNIFICANT LOSS OF STRENGTH AS COMPARED WITH FRESH ROCK.
MODERATELY SEVERE (MOD. SEV.)	ALL ROCK EXCEPT QUARTZ DISCOLORED OR STAINED. IN GRANITOID ROCKS, ALL FELDSPARS DULL AND DISCOLORED AND A MAJORITY SHOW KAOLINIZATION. ROCK SHOWS SEVERE LOSS OF STRENGTH AND CAN BE EXCAVATED WITH A GEOLOGIST'S PICK. ROCK GIVES "CLUNK" SOUND WHEN STRUCK. *IF TESTED, WOULD YIELD SPT REFUSAL*
SEVERE (SEV.)	ALL ROCK EXCEPT QUARTZ DISCOLORED OR STAINED. ROCK FABRIC CLEAR AND EVIDENT BUT REDUCED IN STRENGTH TO STRONG SOIL. IN GRANITOID ROCKS ALL FELDSPARS ARE KAOLINIZED TO SOME EXTENT. SOME FRAGMENTS OF STRONG ROCK USUALLY REMAIN. *IF TESTED, YIELDS SPT N VALUES > 100 BPF*
VERY SEVERE (V SEV.)	ALL ROCK EXCEPT QUARTZ DISCOLORED OR STAINED. ROCK FABRIC ELEMENTS ARE DISCERNIBLE BUT THE MASS IS EFFECTIVELY REDUCED TO SOIL STATUS, WITH ONLY FRAGMENTS OF STRONG ROCK REMAINING. SAPROLITE IS AN EXAMPLE OF ROCK WEATHERED TO A DEGREE SUCH THAT ONLY MINOR VESTIGES OF THE ORIGINAL ROCK FABRIC REMAIN. *IF TESTED, YIELDS SPT N VALUES < 100 BPF*
COMPLETE	ROCK REDUCED TO SOIL. ROCK FABRIC NOT DISCERNIBLE, OR DISCERNIBLE ONLY IN SMALL AND SCATTERED CONCENTRATIONS. QUARTZ MAY BE PRESENT AS DIKES OR STRINGERS. SAPROLITE IS ALSO AN EXAMPLE.

ROCK HARDNESS

VERY HARD	CANNOT BE SCRATCHED BY KNIFE OR SHARP PICK. BREAKING OF HAND SPECIMENS REQUIRES SEVERAL HARD BLOWS OF THE GEOLOGIST'S PICK.
HARD	CAN BE SCRATCHED BY KNIFE OR PICK ONLY WITH DIFFICULTY. HARD HAMMER BLOWS REQUIRED TO DETACH HAND SPECIMEN.
MODERATELY HARD	CAN BE SCRATCHED BY KNIFE OR PICK. GOUGES OR GROOVES TO 0.25 INCHES DEEP CAN BE EXCAVATED BY HARD BLOW OF A GEOLOGIST'S PICK. HAND SPECIMENS CAN BE DETACHED BY MODERATE BLOWS.
MEDIUM HARD	CAN BE GROOVED OR GOUGED 0.05 INCHES DEEP BY FIRM PRESSURE OF KNIFE OR PICK POINT. CAN BE EXCAVATED IN SMALL CHIPS TO PEICES 1 INCH MAXIMUM SIZE BY HARD BLOWS OF THE POINT OF A GEOLOGIST'S PICK.
SOFT	CAN BE GROVED OR GOUGED READILY BY KNIFE OR PICK. CAN BE EXCAVATED IN FRAGMENTS FROM CHIPS TO SEVERAL INCHES IN SIZE BY MODERATE BLOWS OF A PICK POINT. SMALL, THIN PIECES CAN BE BROKEN BY FINGER PRESSURE.
VERY SOFT	CAN BE CARVED WITH KNIFE. CAN BE EXCAVATED READILY WITH POINT OF PICK. PIECES 1 INCH OR MORE IN THICKNESS CAN BE BROKEN BY FINGER PRESSURE. CAN BE SCRATCHED READILY BY FINGERNAIL.

FRACTURE SPACING

TERM	SPACING
VERY WIDE	MORE THAN 10 FEET
WIDE	3 TO 10 FEET
MODERATELY CLOSE	1 TO 3 FEET
CLOSE	0.16 TO 1 FEET
VERY CLOSE	LESS THAN 0.16 FEET

BEDDING

TERM	THICKNESS
VERY THICKLY BEDDED	> 4 FEET
THICKLY BEDDED	1.5 - 4 FEET
THINLY BEDDED	0.16 - 1.5 FEET
VERY THINLY BEDDED	0.03 - 0.16 FEET
THICKLY LAMINATED	0.008 - 0.03 FEET
THINLY LAMINATED	< 0.008 FEET

INDURATION

FOR SEDIMENTARY ROCKS, INDURATION IS THE HARDENING OF THE MATERIAL BY CEMENTING, HEAT, PRESSURE, ETC.

FRIABLE	RUBBING WITH FINGER FREES NUMEROUS GRAINS; GENTLE BLOW BY HAMMER DISINTEGRATES SAMPLE.
MODERATELY INDURATED	GRAINS CAN BE SEPARATED FROM SAMPLE WITH STEEL PROBE; BREAKS EASILY WHEN HIT WITH HAMMER.
INDURATED	GRAINS ARE DIFFICULT TO SEPARATE WITH STEEL PROBE; DIFFICULT TO BREAK WITH HAMMER.
EXTREMELY INDURATED	SHARP HAMMER BLOWS REQUIRED TO BREAK SAMPLE; SAMPLE BREAKS ACROSS GRAINS.

TERMS AND DEFINITIONS

ALLUVIUM (ALLUV.) - SOILS THAT HAVE BEEN TRANSPORTED BY WATER.

AQUIFER - A WATER BEARING FORMATION OR STRATA.

ARENACEOUS - APPLIED TO ROCKS THAT HAVE BEEN DERIVED FROM SAND OR THAT CONTAIN SAND.

ARGILLACEOUS - APPLIED TO ALL ROCKS OR SUBSTANCES COMPOSED OF CLAY MINERALS, OR HAVING A NOTABLE PROPORTION OF CLAY IN THEIR COMPOSITION, AS SHALE, SLATE, ETC.

ARTESIAN - GROUND WATER THAT IS UNDER SUFFICIENT PRESSURE TO RISE ABOVE THE LEVEL AT WHICH IT IS ENCOUNTERED, BUT WHICH DOES NOT NECESSARILY RISE TO OR ABOVE THE GROUND SURFACE.

CALCAREOUS (CALC.) - SOILS THAT CONTAIN APPRECIABLE AMOUNTS OF CALCIUM CARBONATE.

COLLUVIUM - ROCK FRAGMENTS MIXED WITH SOIL DEPOSITED BY GRAVITY ON SLOPE OR AT BOTTOM OF SLOPE.

CORE RECOVERY (REC.) - TOTAL LENGTH OF ALL MATERIAL RECOVERED IN THE CORE BARREL DIVIDED BY TOTAL LENGTH OF CORE RUN AND EXPRESSED AS A PERCENTAGE.

DIKE - A TABULAR BODY OF IGNEOUS ROCK THAT CUTS ACROSS THE STRUCTURE OF ADJACENT ROCKS OR CUTS MASSIVE ROCK.

DIP - THE ANGLE AT WHICH A STRATUM OR ANY PLANAR FEATURE IS INCLINED FROM THE HORIZONTAL.

DIP DIRECTION (DIP AZIMUTH) - THE DIRECTION OR BEARING OF THE HORIZONTAL TRACE OF THE LINE OF DIP, MEASURED CLOCKWISE FROM NORTH.

FAULT - A FRACTURE OR FRACTURE ZONE ALONG WHICH THERE HAS BEEN DISPLACEMENT OF THE SIDES RELATIVE TO ONE ANOTHER PARALLEL TO THE FRACTURE.

FISSILE - A PROPERTY OF SPLITTING ALONG CLOSELY SPACED PARALLEL PLANES.

FLOAT - ROCK FRAGMENTS ON SURFACE NEAR THEIR ORIGINAL POSITION AND DISLODGED FROM PARENT MATERIAL.

FLOOD PLAIN (FP) - LAND BORDERING A STREAM, BUILT OF SEDIMENTS DEPOSITED BY THE STREAM.

FORMATION (FM.) - A MAPPABLE GEOLOGIC UNIT THAT CAN BE RECOGNIZED AND TRACED IN THE FIELD.

JOINT - FRACTURE IN ROCK ALONG WHICH NO APPRECIABLE MOVEMENT HAS OCCURRED.

LEDGE - A SHELF-LIKE RIDGE OR PROJECTION OF ROCK WHOSE THICKNESS IS SMALL COMPARED TO ITS LATERAL EXTENT.

LENS - A BODY OF SOIL OR ROCK THAT THINS OUT IN ONE OR MORE DIRECTIONS.

MOTTLED (MOT.) - IRREGULARLY MARKED WITH SPOTS OF DIFFERENT COLORS. MOTTLING IN SOILS USUALLY INDICATES POOR AERATION AND LACK OF GOOD DRAINAGE.

PERCHED WATER - WATER MAINTAINED ABOVE THE NORMAL GROUND WATER LEVEL BY THE PRESENCE OF AN INTERVENING IMPERVIOUS STRATUM.

RESIDUAL (RES.) SOIL - SOIL FORMED IN PLACE BY THE WEATHERING OF ROCK.

ROCK QUALITY DESIGNATION (RQD) - A MEASURE OF ROCK QUALITY DESCRIBED BY TOTAL LENGTH OF ROCK SEGMENTS EQUAL TO OR GREATER THAN 4 INCHES DIVIDED BY THE TOTAL LENGTH OF CORE RUN AND EXPRESSED AS A PERCENTAGE.

SAPROLITE (SAP.) - RESIDUAL SOIL THAT RETAINS THE RELIC STRUCTURE OR FABRIC OF THE PARENT ROCK.

SILL - AN INTRUSIVE BODY OF IGNEOUS ROCK OF APPROXIMATELY UNIFORM THICKNESS AND RELATIVELY THIN COMPARED WITH ITS LATERAL EXTENT, THAT HAS BEEN EMPLACED PARALLEL TO THE BEDDING OR SCHISTOSITY OF THE INTRUDED ROCKS.

SLICKENSIDE - POLISHED AND STRIATED SURFACE THAT RESULTS FROM FRICTION ALONG A FAULT OR SLIP PLANE.

STANDARD PENETRATION TEST (PENETRATION RESISTANCE) (SPT) - NUMBER OF BLOWS (N OR BPF) OF A 140 LB. HAMMER FALLING 30 INCHES REQUIRED TO PRODUCE A PENETRATION OF 1 FOOT INTO SOIL WITH A 2 INCH OUTSIDE DIAMETER SPLIT SPOON SAMPLER. SPT REFUSAL IS PENETRATION EQUAL TO OR LESS THAN 0.1 FOOT PER 60 BLOWS.

STRATA CORE RECOVERY (SREC.) - TOTAL LENGTH OF STRATA MATERIAL RECOVERED DIVIDED BY TOTAL LENGTH OF STRATUM AND EXPRESSED AS A PERCENTAGE.

STRATA ROCK QUALITY DESIGNATION (SRQD) - A MEASURE OF ROCK QUALITY DESCRIBED BY TOTAL LENGTH OF ROCK SEGMENTS WITHIN A STRATUM EQUAL TO OR GREATER THAN 4 INCHES DIVIDED BY THE TOTAL LENGTH OF STRATA AND EXPRESSED AS A PERCENTAGE.

TOPSOIL (TS.) - SURFACE SOILS USUALLY CONTAINING ORGANIC MATTER.

BENCH MARK: BM-1: RR SPIKE IN BASE OF 38" LIVE OAK AT -BL- STA. 13+55.23, 71.05' RT

ELEVATION: 58.64 FT.

NOTES:

REVISED 09/23/09

PROJECT REFERENCE NO.	SHEET
BD-5104F	3 OF 7

SITE PLAN

0 50 100
FEET

SKEW = 90°

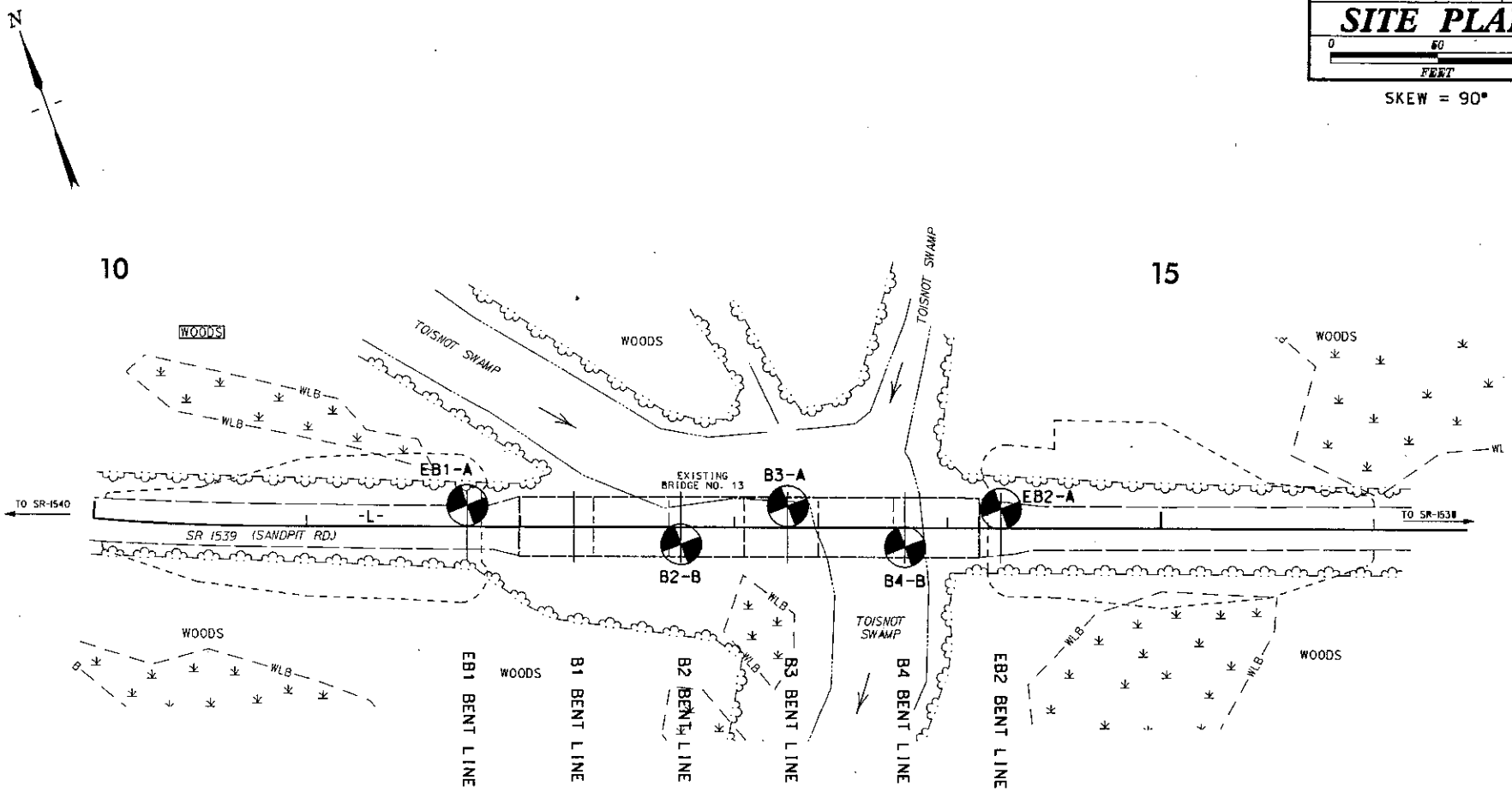

PROJECT REFERENCE NO.	SHEET NO.
BD-5104F	4 OF 7
ROADWAY DESIGN ENGINEER	HYDRAULICS ENGINEER

INCOMPLETE PLANS
DO NOT USE FOR R/W ACQUISITION
PRELIMINARY PLANS
DO NOT USE FOR CONSTRUCTION

PROFILE THROUGH BORINGS PROJECTED ALONG -L-

VE = 2.0

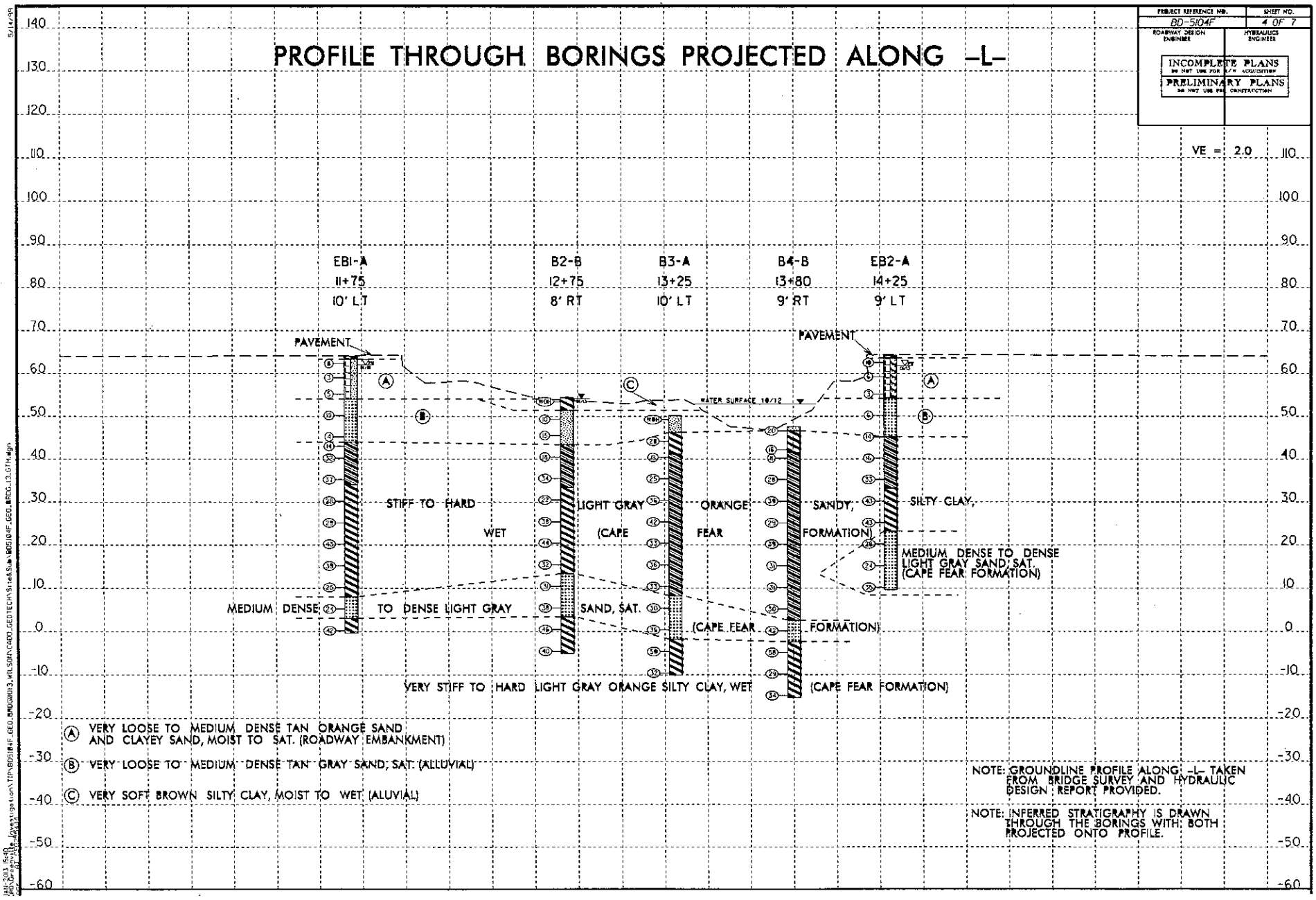

(A) VERY LOOSE TO MEDIUM DENSE TAN ORANGE SAND AND CLAYEY SAND, MOIST TO SAT. (ROADWAY EMBANKMENT)

(B) VERY LOOSE TO MEDIUM DENSE TAN GRAY SAND; SAT. (ALLUVIAL)

(C) VERY SOFT BROWN SILTY CLAY, MOIST TO WET (ALUVIAL)

NOTE: GROUNDLINE PROFILE ALONG -L- TAKEN FROM BRIDGE SURVEY AND HYDRAULIC DESIGN REPORT PROVIDED.

NOTE: INFERRED STRATIGRAPHY IS DRAWN THROUGH THE BORINGS WITH BOTH PROJECTED ONTO PROFILE.

5/14/99

Jan-2013 15:40
JRD Drawing file: J:\Investigation\TIP\B05104F_GEO_BRDG0013_WB_SOIN\CADD\GEOTECH\Sites&Sub\WB05104F_GEO_BRDG_13_07Profile.dgn

NCDOT GEOTECHNICAL ENGINEERING UNIT
BORELOG REPORT

WBS 45350.1.7	TIP BD-5104F	COUNTY WILSON	GEOLOGIST Wrike, C. M.	
SITE DESCRIPTION BRIDGE ON -L- (SR 1539) OVER TOISNOT SWAMP				GROUND WTR (ft)
BORING NO. EB1-A	STATION 11+75	OFFSET 10 ft LT	ALIGNMENT -L-	0 HR. N/A
COLLAR ELEV. 64.0 ft	TOTAL DEPTH 64.3 ft	NORTHING 674,679	EASTING 2,358,164	24 HR. 2.0
DRILL RIG/HAMMER EFF./DATE GFO1042 CME-550 91% 05/23/2012		DRILL METHOD Mud Rotary		HAMMER TYPE Automatic
DRILLER Smith, R. E.	START DATE 01/17/13	COMP. DATE 01/17/13	SURFACE WATER DEPTH N/A	

ELEV (ft)	DRIVE ELEV (ft)	DEPTH (ft)	BLOW COUNT 0.5ft	0.5ft	0.5ft	BLOWS PER FOOT 0 25 50 75 100	SAMP. NO.	MOI	LOG	SOIL AND ROCK DESCRIPTION ELEV. (ft)	DEPTH (ft)
										64.0 GROUND SURFACE	0.0
	63.3	0.7	3	3	5	8				63.3 PAVEMENT	0.7
										ROADWAY EMBANKMENT TAN ORANGE SAND, MOIST TO SAT.	
	60.0	4.0	2	1	2	3					
	56.2	7.8	2	3	2	5				54.0	10.0
										ALLUVIAL TAN GRAY SAND, SAT.	
	51.2	12.8	8	9	10	19					
	46.2	17.8	4	2	2	4					
	44.0	20.0	5	6	8	14				44.0	20.0
	41.2	22.8	9	14	18	32				COASTAL PLAIN LIGHT GRAY ORANGE SANDY SILTY CLAY, WET (CAPE FEAR FORMATION)	
	36.2	27.8	10	19	18	37					
	31.2	32.8	10	12	16	28				34.0	30.0
	26.2	37.8	12	15	14	25					
	21.2	42.8	14	20	23	43					
	16.2	47.8	10	20	19	39					
	11.2	52.8	8	12	13	25				8.0	56.0
	6.2	57.8	8	12	12	24				COASTAL PLAIN LIGHT GRAY SAND, SAT. (CAPE FEAR FORMATION)	
	1.2	62.8	10	17	25	42				3.0	61.0
										COASTAL PLAIN LIGHT GRAY ORANGE SILTY CLAY, WET (CAPE FEAR FORMATION)	
										0.3	64.3
										Boring Terminated at Elevation -0.3 ft IN HARD SILTY CLAY	

WBS 45350.1.7	TIP BD-5104F	COUNTY WILSON	GEOLOGIST Wrike, C. M.	
SITE DESCRIPTION BRIDGE ON -L- (SR 1539) OVER TOISNOT SWAMP				GROUND WTR (ft)
BORING NO. B2-B	STATION 12+75	OFFSET 8 ft RT	ALIGNMENT -L-	0 HR. N/A
COLLAR ELEV. 54.4 ft	TOTAL DEPTH 59.4 ft	NORTHING 674,627	EASTING 2,358,251	24 HR. 0.3
DRILL RIG/HAMMER EFF./DATE GFO1042 CME-550 91% 05/23/2012		DRILL METHOD Mud Rotary		HAMMER TYPE Automatic
DRILLER Smith, R. E.	START DATE 01/16/13	COMP. DATE 01/16/13	SURFACE WATER DEPTH N/A	

ELEV (ft)	DRIVE ELEV (ft)	DEPTH (ft)	BLOW COUNT 0.5ft	0.5ft	0.5ft	BLOWS PER FOOT 0 25 50 75 100	SAMP. NO.	MOI	LOG	SOIL AND ROCK DESCRIPTION ELEV. (ft)	DEPTH (ft)
										54.4 GROUND SURFACE	0.0
	54.4	0.0	WOH	WOH	WOH	0				ALLUVIAL BROWN SILTY CLAY, MOIST TO WET	
										51.4	3.0
	50.3	4.1	4	5	5	10				ALLUVIAL TAN GRAY SAND, SAT.	
	46.5	7.9	5	7	8	15					
	41.5	12.9	6	8	10	18				43.4	11.0
										COASTAL PLAIN LIGHT GRAY ORANGE SILTY SANDY CLAY, WET (CAPE FEAR FORMATION)	
	36.5	17.9	9	18	16	34					
	31.5	22.9	10	12	10	22				33.4	21.0
	26.5	27.9	18	17	21	38					
	21.5	32.9	13	20	24	44					
	16.5	37.9	12	15	17	32				13.4	41.0
										COASTAL PLAIN LIGHT GRAY SAND, SAT. (CAPE FEAR FORMATION)	
	11.5	42.9	8	15	16	31					
	6.5	47.9	10	18	20	38					
	1.5	52.9	16	18	28	46				3.4	51.0
										COASTAL PLAIN LIGHT GRAY ORANGE SILTY CLAY, WET (CAPE FEAR FORMATION)	
	-3.5	57.9	10	18	22	40				-5.0	59.4
										Boring Terminated at Elevation -5.0 ft IN HARD SILTY CLAY	

(CDO) BORE DOUBLE BORINGS.GPJ NC DOT.GDT 1/29/13

NCDOT GEOTECHNICAL ENGINEERING UNIT
BORELOG REPORT

WBS 45350.1.7	TIP BD-5104F	COUNTY WILSON	GEOLOGIST Wrike, C. M.
SITE DESCRIPTION BRIDGE ON -L- (SR 1539) OVER TOISNOT SWAMP			GROUND WTR (ft)
BORING NO. B3-A	STATION 13+25	OFFSET 10 ft LT	ALIGNMENT -L-	0 HR. N/A
COLLAR ELEV. 50.2 ft	TOTAL DEPTH 60.3 ft	NORTHING 674,626	EASTING 2,358,304	24 HR. N/A
DRILL RIG/HAMMER EFF./DATE GFO1042 CME-550 91% 05/23/2012		DRILL METHOD Mud Rotary	HAMMER TYPE Automatic
DRILLER Smith, R. E.	START DATE 01/14/12	COMP. DATE 01/14/12	SURFACE WATER DEPTH 2.4ft

ELEV (ft)	DRIVE ELEV (ft)	DEPTH (ft)	BLOW COUNT 0.5ft	0.5ft	0.5ft	BLOWS PER FOOT 0 25 50 75 100	SAMP. NO.	MOI	LOG	SOIL AND ROCK DESCRIPTION ELEV. (ft)	DEPTH (ft)
										WATER SURFACE (01/14/12)	
50.2	50.2	0.0	WOH	WOH	WOH					GROUND SURFACE	0.0
										ALLUVIAL GRAY SAND, MOIST TO SAT.	
46.2	45.2	5.0	9	13	15					COASTAL PLAIN LIGHT GRAY ORANGE SANDY SILTY CLAY, WET (CAPE FEAR FORMATION)	4.0
41.2	41.4	8.8	6	8	10						9.0
	36.4	13.8	4	12	13						
	31.4	18.8	12	18	18						
	26.4	23.8	9	16	26						
	21.4	28.8	10	14	19						
	16.4	33.8	8	15	21						
	11.4	38.8	9	14	19						
8.2	6.4	43.8	8	14	16					COASTAL PLAIN LIGHT GRAY SAND, SAT. (CAPE FEAR FORMATION)	42.0
	1.4	48.8	13	19	17						
-1.8	-3.6	53.8	14	22	28					COASTAL PLAIN LIGHT GRAY ORANGE SILTY CLAY, WET (CAPE FEAR FORMATION)	52.0
-10.1	-8.6	58.8	11	12	20					Boring Terminated at Elevation -10.1 ft IN HARD SILTY CLAY	60.3

WBS 45350.1.7	TIP BD-5104F	COUNTY WILSON	GEOLOGIST Wrike, C. M.
SITE DESCRIPTION BRIDGE ON -L- (SR 1539) OVER TOISNOT SWAMP			GROUND WTR (ft)
BORING NO. B4-B	STATION 13+80	OFFSET 9 ft RT	ALIGNMENT -L-	0 HR. N/A
COLLAR ELEV. 47.6 ft	TOTAL DEPTH 62.9 ft	NORTHING 674,588	EASTING 2,358,348	24 HR. N/A
DRILL RIG/HAMMER EFF./DATE GFO1042 CME-550 91% 05/23/2012		DRILL METHOD Mud Rotary	HAMMER TYPE Automatic
DRILLER Smith, R. E.	START DATE 01/15/13	COMP. DATE 01/15/13	SURFACE WATER DEPTH 5.0ft

ELEV (ft)	DRIVE ELEV (ft)	DEPTH (ft)	BLOW COUNT 0.5ft	0.5ft	0.5ft	BLOWS PER FOOT 0 25 50 75 100	SAMP. NO.	MOI	LOG	SOIL AND ROCK DESCRIPTION
										WATER SURFACE (01/15/13)
47.6	47.6	0.0	1	8	12					GROUND SURFACE 0.0
46.6										ALLUVIAL GRAY SAND, SAT. 1.0
	43.2	4.4	6	7	9					COASTAL PLAIN LIGHT GRAY ORANGE SANDY, SILTY CLAY, WET (CAPE FEAR FORMATION)
41.6	41.2	6.4	3	5	6					6.0
	36.2	11.4	11	14	14					
	31.2	16.4	10	17	22					
	26.2	21.4	10	12	17					
	21.2	26.4	10	16	23					
	16.2	31.4	11	13	18					
	11.2	36.4	10	13	18					
	6.2	41.4	11	15	15					
2.6	1.2	46.4	13	18	26					COASTAL PLAIN LIGHT GRAY SAND, SAT. (CAPE FEAR FORMATION) 45.0
-2.4	-3.8	51.4	21	26	32					COASTAL PLAIN LIGHT GRAY ORANGE SILTY CLAY, WET (CAPE FEAR FORMATION) 50.0
	-8.8	56.4	11	14	15					
-15.3	-13.8	61.4	13	16	18					Boring Terminated at Elevation -15.3 ft IN HARD SILTY CLAY 62.9

NCDOT BORE DOUBLE BORINGS.GPJ NC_DOT.GDT 1/24/13

NCDOT GEOTECHNICAL ENGINEERING UNIT
BORELOG REPORT

WBS 45350.1.7	TIP BD-5104F	COUNTY WILSON	GEOLOGIST Wrike, C. M.	
SITE DESCRIPTION BRIDGE ON -L- (SR 1539) OVER TOISNOT SWAMP				GROUND WTR (ft)
BORING NO. EB2-A	STATION 14+25	OFFSET 9 ft LT	ALIGNMENT -L-	0 HR. N/A
COLLAR ELEV. 64.2 ft	TOTAL DEPTH 54.5 ft	NORTHING 674,572	EASTING 2,358,380	24 HR. 2.4
DRILL RIG/HAMMER EFF./DATE GFO1042 CME-550 91% 05/23/2012		DRILL METHOD Mud Rotary		HAMMER TYPE Automatic
DRILLER Smith, R. E.	START DATE 01/17/13	COMP. DATE 01/17/13	SURFACE WATER DEPTH N/A	

ELEV (ft)	DRIVE ELEV (ft)	DEPTH (ft)	BLOW COUNT 0.5ft	0.5ft	0.5ft	BLOWS PER FOOT 0 25 50 75 100	SAMP. NO.	MOI	LOG	SOIL AND ROCK DESCRIPTION ELEV. (ft)	DEPTH (ft)
65										64.2 GROUND SURFACE	0.0
	63.5	0.7	3	5	5	10				63.5 PAVEMENT	0.7
60	60.2	4.0	3	3	3	6				ROADWAY EMBANKMENT TAN ORANGE CLAYEY SAND, MOIST TO SAT.	
55	56.2	8.0	WOH	1	2	3				54.2	10.0
										ALLUVIAL TAN GRAY SAND, SAT.	
50	51.2	13.0	1	2	4	6					
45	46.2	18.0	6	6	8	14				45.2	19.0
										COASTAL PLAIN LIGHT GRAY ORANGE SANDY SILTY CLAY, WET (CAPE FEAR FORMATION)	
40	41.2	23.0	5	6	10	16					
35	36.2	28.0	9	16	17	33				33.2	31.0
30	31.2	33.0	11	19	24	43					
25	26.2	38.0	12	18	25	43					
										23.2	41.0
										COASTAL PLAIN LIGHT GRAY SAND, SAT. (CAPE FEAR FORMATION)	
20	21.2	43.0	8	13	15	28					
15	16.2	48.0	8	10	14	24					
10	11.2	53.0	9	12	23	35				9.7	54.5
										Boring Terminated at Elevation 9.7 ft IN DENSE SAND	

NCDOT BORE DOUBLE BORINGS.GPJ NC_DOT.GDT 1/28/13