This electronic collection of documents is provided for the convenience of the user and is Not a Certified Document –

The documents contained herein were originally issued and sealed by the individuals whose names and license numbers appear on each page, on the dates appearing with their signature on that page.
This file or an individual page shall not be considered a certified document.

09/08/99

TIP PROJECT: 17BP.4.R.66

CONTRACT: DD00239

See Sheet 1-A For Index of Sheets

STATE OF NORTH CAROLINA
DIVISION OF HIGHWAYS

STATE	STATE PROJECT REFERENCE NO.	SHEET NO.	TOTAL SHEETS
N.C.	17BP.4.R.66	1	

STATE PROJ. NO.	F.A. PROJ. NO.	DESCRIPTION
17BP.4.R.66		PE

EDGECOMBE COUNTY

LOCATION: REPLACEMENT OF BRIDGE 45 OVER WHITE OAK SWAMP ON SR 1428 (WHITE OAK SWAMP RD.)

TYPE OF WORK: GRADING, DRAINAGE, PAVING AND STRUCTURE

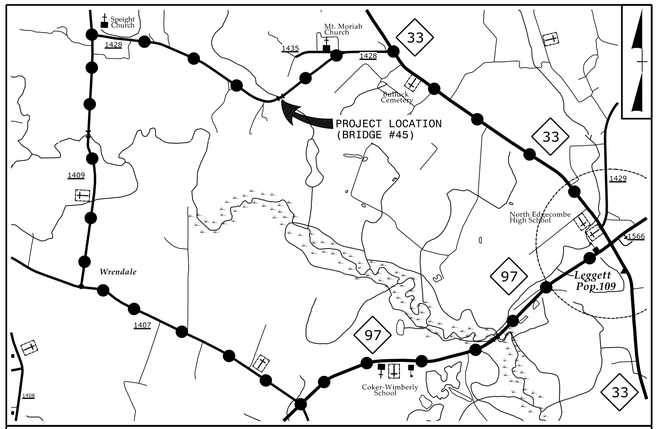

VICINITY MAP
(NOT TO SCALE)
DETOUR ROUTE (APPROXIMATE LENGTH = 8 MILES)

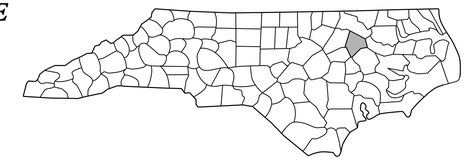

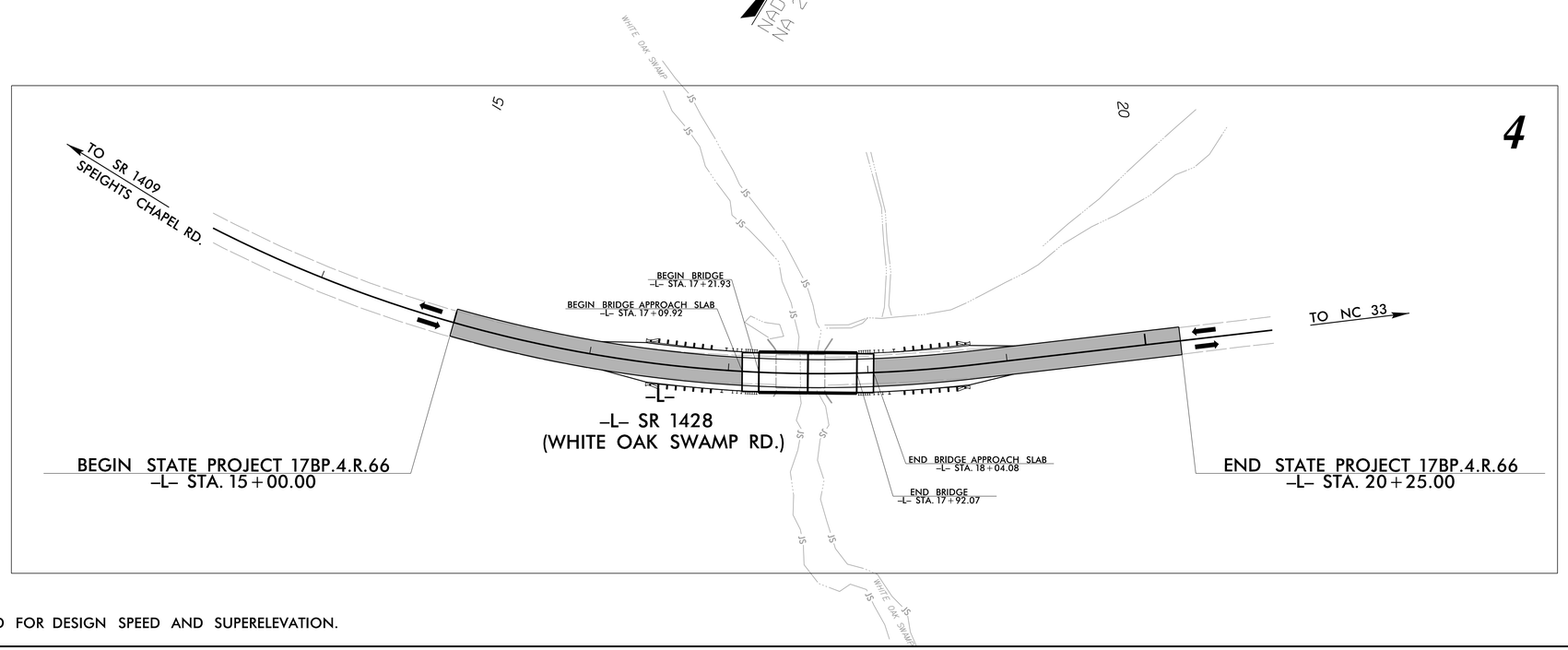

DESIGN EXCEPTION REQUIRED FOR DESIGN SPEED AND SUPERELEVATION.

GRAPHIC SCALES

50 25 0 50 100
PLANS

50 25 0 50 100
PROFILE (HORIZONTAL)

10 5 0 10 20
PROFILE (VERTICAL)

DESIGN DATA

ADT 2013 = 260

V = 60 MPH

FUNC CLASS = LOCAL

SUB-REGIONAL TIER

PROJECT LENGTH

LENGTH ROADWAY STATE PROJECT 17BP.4.R.66	=	0.086 MILES
LENGTH STRUCTURES STATE PROJECT 17BP.4.R.66	=	0.013 MILES
TOTAL LENGTH STATE PROJECT 17BP.4.R.66	=	0.099 MILES

Prepared for:
HIGHWAY DIVISION 4
509 Ward Blvd.
Wilson, NC 27895

2018 STANDARD SPECIFICATIONS

RIGHT OF WAY DATE:
FEBRUARY, 2017

LETTING DATE:
MAY 22, 2018

Prepared by:
CALYX
ENGINEERS + CONSULTANTS
6750 TRYON ROAD
CARY, NC 27518
phone: 919.851.1912
CALYXengineers.com
NC License # F-1333

L. KEVIN AUSTIN, PE
PROJECT MANAGER

STEPHEN C. BROWDE, PE
ROADWAY PROJECT DESIGN ENGINEER

RACHEL C. EVANS, PE
NCDOT CONTACT

HYDRAULICS ENGINEER
DocuSigned by: David P. Bocker
50C7A1B04E6847...
4/24/2018
P.E.
SIGNATURE:
NORTH CAROLINA PROFESSIONAL SEAL 029984 ENGINEER DAVID P. BOCKER

ROADWAY DESIGN ENGINEER
DocuSigned by: Stephen C. Browde
DE27971E12EA42B...
4/24/2018
P.E.
SIGNATURE:
NORTH CAROLINA PROFESSIONAL SEAL 15759 ENGINEER STEPHEN C. BROWDE

STATE OF NORTH CAROLINA DEPARTMENT OF TRANSPORTATION

4/4/2018
R:\Roadway\Proj\Edgecombe 45_RDY_TSH.dgn
ewilliamson

8/17/99

PROJECT REFERENCE NO.	SHEET NO.
17BP.4.R.66	1A

ROADWAY DESIGN ENGINEER

NORTH CAROLINA PROFESSIONAL SEAL 15759 ENGINEER STEPHEN C. BROWN

DocuSigned by: Stephen C. Brown 5C0B27A7E12E42D...

4/24/2018

DOCUMENT NOT CONSIDERED FINAL UNLESS ALL SIGNATURES COMPLETED

INDEX OF SHEETS

SHEET #	DESCRIPTION
1	TITLE SHEET
1A	INDEX OF SHEETS, GENERAL NOTES, & LIST OF STANDARD DRAWINGS
1B	CONVENTIONAL PLAN SHEET SYMBOLS
1C THRU 1C-2	SURVEY CONTROL SHEETS
2A-1 THRU 2A-2	PAVEMENT SCHEDULE AND TYPICAL SECTIONS
2C-1 THRU 2C-3	DETAILS FOR GUARDRAIL INSTALLATION & FOR GUARDRAIL STRUCTURE ANCHOR UNITS
3B-1	SUMMARIES OF GUARDRAIL, EARTHWORK, ASPHALT PAVEMENT REMOVAL & SHOULDER BERM GUTTER
3D-1	SUMMARY OF DRAINAGE
4-5	PLAN & PROFILE SHEETS
TMP-1	TRANSPORTATION MANAGEMENT PLAN
EC-1 THRU EC-5	EROSION CONTROL PLANS
RF-1	REFORESTATION PLANS
UC-1 THRU UC-4	UTILITY CONSTRUCTION PLANS
XS-1A	CROSS-SECTION SUMMARY
X-1 THRU X-6	CROSS-SECTIONS
S-1 THRU S-16	STRUCTURE PLANS

STANDARD SPECIFICATIONS

GENERAL NOTES:

2018 SPECIFICATIONS
EFFECTIVE: 01-16-2018
REVISED:

GRADE LINE:
GRADING AND SURFACING:

THE GRADE LINES SHOWN DENOTE THE FINISHED ELEVATION OF THE PROPOSED SURFACING AT GRADE POINTS SHOWN ON THE TYPICAL SECTIONS. GRADE LINES MAY BE ADJUSTED AT THEIR BEGINNING AND ENDING AND AT STRUCTURES AS DIRECTED BY THE ENGINEER IN ORDER TO SECURE A PROPER TIE-IN.

CLEARING:

CLEARING ON THIS PROJECT SHALL BE PERFORMED TO THE LIMITS ESTABLISHED BY METHOD II.

SUPERELEVATION:

ALL CURVES ON THIS PROJECT SHALL BE SUPERELEVATED IN ACCORDANCE WITH STD. NO. 225.04 USING THE RATE OF SUPERELEVATION AND RUNOFF SHOWN ON THE PLANS. SUPERELEVATION IS TO BE REVOLVED ABOUT THE GRADE POINTS SHOWN ON THE TYPICAL SECTIONS.

SHOULDER CONSTRUCTION:

ASPHALT, EARTH, AND CONCRETE SHOULDER CONSTRUCTION ON THE HIGH SIDE OF SUPERELEVATED CURVES SHALL BE IN ACCORDANCE WITH STD. NO. 560.01

SIDE ROADS:

THE CONTRACTOR WILL BE REQUIRED TO DO ALL NECESSARY WORK TO PROVIDE SUITABLE CONNECTIONS WITH ALL ROADS, STREETS, AND DRIVES ENTERING THIS PROJECT. THIS WORK WILL BE PAID FOR AT THE CONTRACT UNIT PRICE FOR THE PARTICULAR ITEMS INVOLVED.

GUARDRAIL:

THE GUARDRAIL LOCATIONS SHOWN ON THE PLANS MAY BE ADJUSTED DURING CONSTRUCTION AS DIRECTED BY THE ENGINEER. THE CONTRACTOR SHOULD CONSULT WITH THE ENGINEER PRIOR TO ORDERING GUARDRAIL MATERIAL.

SUBSURFACE PLANS:

NO SUBSURFACE PLANS ARE AVAILABLE ON THIS PROJECT. THE CONTRACTOR SHOULD MAKE HIS OWN INVESTIGATION AS TO THE SUBSURFACE CONDITIONS.

END BENTS:

THE ENGINEER SHALL CHECK THE STRUCTURE END BENT PLANS, DETAILS, AND CROSS-SECTION PRIOR TO SETTING OF THE SLOPE STAKES FOR THE EMBANKMENT OR EXCAVATION APPROACHING A BRIDGE.

RIGHT-OF-WAY MARKERS:

ALL RIGHT-OF-WAY MARKERS ON THIS PROJECT SHALL BE PLACED BY OTHERS.

LIST OF STANDARD DRAWINGS

EFF. 01-16-2018
REV.

2018 ROADWAY ENGLISH STANDARD DRAWINGS

The following Roadway Standards as appear in "Roadway Standard Drawings" Highway Design Branch - N. C. Department of Transportation - Raleigh, N. C., Dated January, 2018 are applicable to this project and by reference hereby are considered a part of these plans:

STD.NO.	TITLE
DIVISION 2 - EARTHWORK	
200.02	Method of Clearing - Method II
225.02	Guide for Grading Subgrade - Secondary and Local
225.04	Method of Obtaining Superelevation - Two Lane Pavement
DIVISION 3 - PIPE CULVERTS	
300.01	Method of Pipe Installation
DIVISION 4 - MAJOR STRUCTURES	
422.02	Reinforced Bridge Approach Fills - Type II Modified Approach Fill
DIVISION 5 - SUBGRADE, BASES AND SHOULDERS	
560.01	Method of Shoulder Construction - High Side of Superelevated Curve - Method I
DIVISION 6 - ASPHALT BASES AND PAVEMENTS	
654.01	Pavement Repairs
DIVISION 8 - INCIDENTALS	
840.00	Concrete Base Pad for Drainage Structures
840.18	Concrete Grated Drop Inlet Type 'B' - 12" thru 36" Pipe
840.29	Frames and Narrow Slot Flat Grates
840.35	Traffic Bearing Grated Drop Inlet - for Cast Iron Double Frame and Grates
846.01	Concrete Curb, Gutter and Curb & Gutter
846.04	Drop Inlet Installation in Shoulder Berm Gutter
862.01	Guardrail Placement
862.02	Guardrail Installation
876.02	Guide for Rip Rap at Pipe Outlets

4/20/2018
12:12:26 pm
C:\Projects\2013\2013058.10\CLIENT\Roadway\Proj\Edgecombe.45.RDY.1A&1B.dgn
GDATA.dgn

04/06/15

PROJECT REFERENCE NO.	SHEET NO.
17BP.4.R.66	1B

STATE OF NORTH CAROLINA, DIVISION OF HIGHWAYS

CONVENTIONAL PLAN SHEET SYMBOLS

Note: Not to Scale **S.U.E. = Subsurface Utility Engineering*

BOUNDARIES AND PROPERTY:

- State Line
- County Line
- Township Line
- City Line
- Reservation Line
- Property Line
- Existing Iron Pin — EIP
- Property Corner
- Property Monument — ECM
- Parcel/Sequence Number — 123
- Existing Fence Line
- Proposed Woven Wire Fence
- Proposed Chain Link Fence
- Proposed Barbed Wire Fence
- Existing Wetland Boundary — WLB
- Proposed Wetland Boundary — WLB
- Existing Endangered Animal Boundary — EAB
- Existing Endangered Plant Boundary — EPB
- Existing Historic Property Boundary — HPB
- Known Contamination Area: Soil
- Potential Contamination Area: Soil
- Known Contamination Area: Water
- Potential Contamination Area: Water
- Contaminated Site: Known or Potential

BUILDINGS AND OTHER CULTURE:

- Gas Pump Vent or U/G Tank Cap
- Sign — S
- Well — W
- Small Mine
- Foundation
- Area Outline
- Cemetery
- Building
- School
- Church
- Dam

HYDROLOGY:

- Stream or Body of Water
- Hydro, Pool or Reservoir
- Jurisdictional Stream — JS
- Buffer Zone 1 — BZ 1
- Buffer Zone 2 — BZ 2
- Flow Arrow
- Disappearing Stream
- Spring
- Wetland
- Proposed Lateral, Tail, Head Ditch — FLOW
- False Sump

RAILROADS:

- Standard Gauge — CSX TRANSPORTATION
- RR Signal Milepost — MILEPOST 35
- Switch — SWITCH
- RR Abandoned
- RR Dismantled

RIGHT OF WAY:

- Baseline Control Point
- Existing Right of Way Marker
- Existing Right of Way Line
- Proposed Right of Way Line — RW
- Proposed Right of Way Line with Iron Pin and Cap Marker — RW
- Proposed Right of Way Line with Concrete or Granite R/W Marker — RW
- Proposed Control of Access Line with Concrete C/A Marker — CA
- Existing Control of Access — CA
- Proposed Control of Access — CA
- Existing Easement Line — E
- Proposed Temporary Construction Easement — E
- Proposed Temporary Drainage Easement — TDE
- Proposed Permanent Drainage Easement — PDE
- Proposed Permanent Drainage / Utility Easement — DUE
- Proposed Permanent Utility Easement — PUE
- Proposed Temporary Utility Easement — TUE
- Proposed Aerial Utility Easement — AUE
- Proposed Permanent Easement with Iron Pin and Cap Marker

ROADS AND RELATED FEATURES:

- Existing Edge of Pavement
- Existing Curb
- Proposed Slope Stakes Cut — C
- Proposed Slope Stakes Fill — F
- Proposed Curb Ramp — CR
- Existing Metal Guardrail
- Proposed Guardrail
- Existing Cable Guiderail
- Proposed Cable Guiderail
- Equality Symbol
- Pavement Removal

VEGETATION:

- Single Tree
- Single Shrub
- Hedge
- Woods Line
- Orchard
- Vineyard — Vineyard

EXISTING STRUCTURES:

MAJOR:

- Bridge, Tunnel or Box Culvert — CONC
- Bridge Wing Wall, Head Wall and End Wall — CONC WW

MINOR:

- Head and End Wall — CONC HW
- Pipe Culvert
- Footbridge
- Drainage Box: Catch Basin, DI or JB — CB
- Paved Ditch Gutter
- Storm Sewer Manhole — S
- Storm Sewer — S

UTILITIES:

POWER:

- Existing Power Pole
- Proposed Power Pole
- Existing Joint Use Pole
- Proposed Joint Use Pole
- Power Manhole — P
- Power Line Tower
- Power Transformer
- U/G Power Cable Hand Hole
- H-Frame Pole
- U/G Power Line LOS B (S.U.E.*) — P
- U/G Power Line LOS C (S.U.E.*) — P
- U/G Power Line LOS D (S.U.E.*) — P

TELEPHONE:

- Existing Telephone Pole
- Proposed Telephone Pole
- Telephone Manhole — T
- Telephone Pedestal — T
- Telephone Cell Tower
- U/G Telephone Cable Hand Hole
- U/G Telephone Cable LOS B (S.U.E.*) — T
- U/G Telephone Cable LOS C (S.U.E.*) — T
- U/G Telephone Cable LOS D (S.U.E.*) — T
- U/G Telephone Conduit LOS B (S.U.E.*) — TC
- U/G Telephone Conduit LOS C (S.U.E.*) — TC
- U/G Telephone Conduit LOS D (S.U.E.*) — TC
- U/G Fiber Optics Cable LOS B (S.U.E.*) — T FO
- U/G Fiber Optics Cable LOS C (S.U.E.*) — T FO
- U/G Fiber Optics Cable LOS D (S.U.E.*) — T FO

WATER:

- Water Manhole — W
- Water Meter
- Water Valve
- Water Hydrant
- U/G Water Line LOS B (S.U.E*) — W
- U/G Water Line LOS C (S.U.E*) — W
- U/G Water Line LOS D (S.U.E*) — W
- Above Ground Water Line — A/G Water

TV:

- TV Pedestal — C
- TV Tower
- U/G TV Cable Hand Hole — HH
- U/G TV Cable LOS B (S.U.E.*) — TV
- U/G TV Cable LOS C (S.U.E.*) — TV
- U/G TV Cable LOS D (S.U.E.*) — TV
- U/G Fiber Optic Cable LOS B (S.U.E.*) — TV FO
- U/G Fiber Optic Cable LOS C (S.U.E.*) — TV FO
- U/G Fiber Optic Cable LOS D (S.U.E.*) — TV FO

GAS:

- Gas Valve
- Gas Meter
- U/G Gas Line LOS B (S.U.E.*) — G
- U/G Gas Line LOS C (S.U.E.*) — G
- U/G Gas Line LOS D (S.U.E.*) — G
- Above Ground Gas Line — A/G Gas

SANITARY SEWER:

- Sanitary Sewer Manhole
- Sanitary Sewer Cleanout
- U/G Sanitary Sewer Line — SS
- Above Ground Sanitary Sewer — A/G Sanitary Sewer
- SS Forced Main Line LOS B (S.U.E.*) — FSS
- SS Forced Main Line LOS C (S.U.E.*) — FSS
- SS Forced Main Line LOS D (S.U.E.*) — FSS

MISCELLANEOUS:

- Utility Pole
- Utility Pole with Base
- Utility Located Object
- Utility Traffic Signal Box — S
- Utility Unknown U/G Line LOS B (S.U.E.*) — ?UTL
- U/G Tank; Water, Gas, Oil
- Underground Storage Tank, Approx. Loc. — UST
- A/G Tank; Water, Gas, Oil
- Geoenvironmental Boring
- U/G Test Hole LOS A (S.U.E.*)
- Abandoned According to Utility Records — AATUR
- End of Information — E.O.I.

6/2/99

PROJECT REFERENCE NO.	SHEET NO.
32-0045	1C-1
Location and Surveys	

SURVEY CONTROL SHEET 32-0045

BASELINE DATA

BL

POINT	DESC.	NORTH	EAST	ELEVATION	L STATION	OFFSET
100	BL-100	823139.6850	2407758.6090	66.06	11+88.24	16.17 RT
101	BL-101	823477.9319	2408576.3399	64.06	20+91.24	14.59 RT
102	BL-102	823577.6370	2408727.5250	64.46	OUTSIDE PROJECT LIMITS	

BENCHMARK DATA

****
TBM#1 ELEVATION = 60.23
N 823185 E 2408352
L STATION 17+49.00 108 RIGHT
****
****
TBM#2 ELEVATION = 63.83
N 823479 E 2408644
OUTSIDE PROJECT LIMITS
****

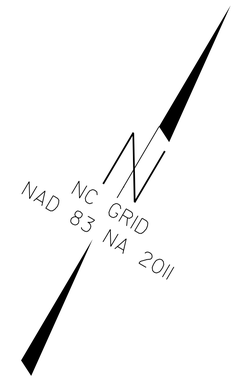

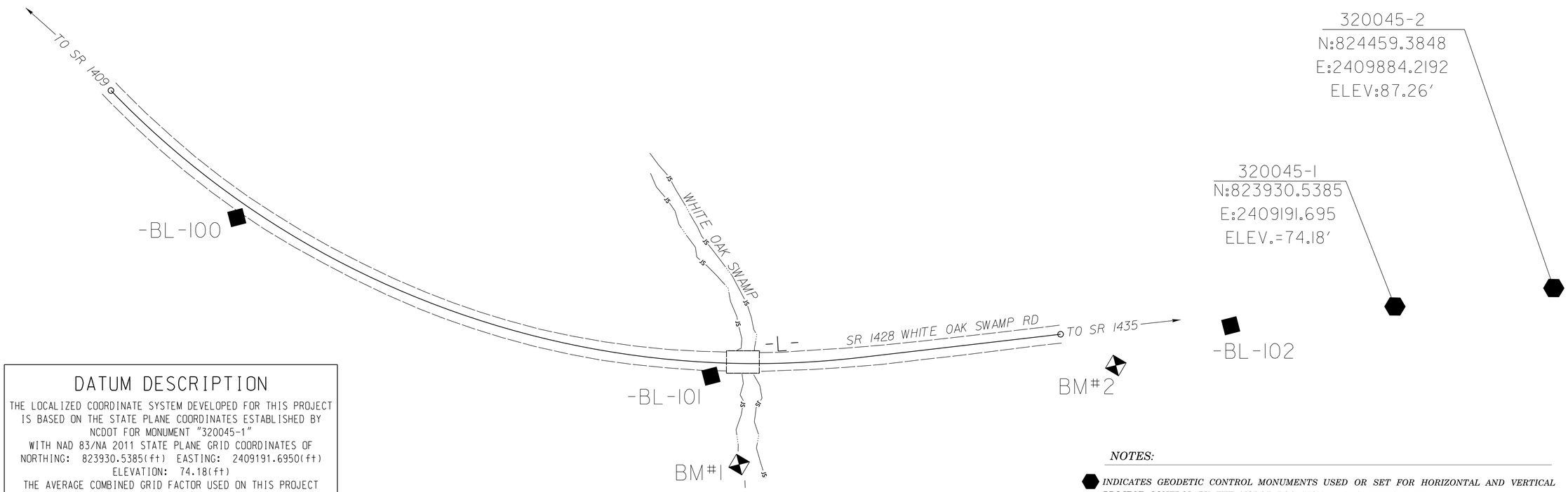

DATUM DESCRIPTION

THE LOCALIZED COORDINATE SYSTEM DEVELOPED FOR THIS PROJECT
IS BASED ON THE STATE PLANE COORDINATES ESTABLISHED BY
NCDOT FOR MONUMENT "320045-1"
WITH NAD 83/NA 2011 STATE PLANE GRID COORDINATES OF
NORTHING: 823930.5385(ft) EASTING: 2409191.6950(ft)
ELEVATION: 74.18(ft)
THE AVERAGE COMBINED GRID FACTOR USED ON THIS PROJECT
(GROUND TO GRID) IS: 0.999960748
THE N.C. LAMBERT GRID BEARING AND
LOCALIZED HORIZONTAL GROUND DISTANCE FROM
"320045-1" TO -L- STATION 10+00.00 IS
S65°20'27.93"W 1779.2906
ALL LINEAR DIMENSIONS ARE LOCALIZED HORIZONTAL DISTANCES
VERTICAL DATUM USED IS NAVD 88

NOTE: DRAWING NOT TO SCALE

NOTES:

⬢ *INDICATES GEODETIC CONTROL MONUMENTS USED OR SET FOR HORIZONTAL AND VERTICAL PROJECT CONTROL BY THE NCDOT LOCATION AND SURVEYS UNIT.*
PROJECT CONTROL ESTABLISHED USING GNSS (GLOBAL NAVIGATION SATELLITE SYSTEM).

THE CONTROL DATA FOR THIS PROJECT CAN BE FOUND ELECTRONICALLY BY SELECTING PROJECT CONTROL DATA AT:
HTTPS://CONNECT.NCDOT.GOV/RESOURCES/LOCATION/

THE FILES TO BE FOUND ARE AS FOLLOWS:
320045_LS_CONTROL.TXT

4/4/2018
R:\Projects\Survey\320045_ls_tc1.dgn
ewilliamson

6/2/99

PROJECT REFERENCE NO.	SHEET NO.
32–0045	1C–2
Location and Surveys	

SURVEY CONTROL SHEET 32–0045

FINAL

ROW MARKER PERMANENT EASEMENT

ALIGN	STATION	OFFSET	NORTH	EAST
L	16+65.00	-30.64	823267.78872	2408211.31132
L	16+65.00	-45.00	823280.85514	2408205.34431
L	16+90.00	-45.00	823291.03402	2408226.88546
L	16+90.00	-31.08	823278.52445	2408232.99755

L

TYPE	STATION	NORTH	EAST
PC	10+00.00	823188.1911	2407574.6621
PCC	12+96.56	823154.2733	2407868.0247
PT	18+75.95	823347.8880	2408404.7730
POT	20+91.24	823477.9319	2408576.3399

DATUM DESCRIPTION

THE LOCALIZED COORDINATE SYSTEM DEVELOPED FOR THIS PROJECT
IS BASED ON THE STATE PLANE COORDINATES ESTABLISHED BY
NCDOT FOR MONUMENT "320045-1"
WITH NAD 83/NA 2011 STATE PLANE GRID COORDINATES OF
NORTHING: 823930.5385(ft) EASTING: 2409191.6950(ft)
ELEVATION: 74.18(ft)
THE AVERAGE COMBINED GRID FACTOR USED ON THIS PROJECT
(GROUND TO GRID) IS: 0.999960748
THE N.C. LAMBERT GRID BEARING AND
LOCALIZED HORIZONTAL GROUND DISTANCE FROM
"320045-1" TO -L- STATION 10+00.00 IS
S65°20'27.93"W 1779.2906
ALL LINEAR DIMENSIONS ARE LOCALIZED HORIZONTAL DISTANCES
VERTICAL DATUM USED IS NAVD 88

NOTE: DRAWING NOT TO SCALE

4/4/2018
R:\Roadway\Survey\320045_ls_lc2.dgn
ewilliamson

6/2/99

PAVEMENT SCHEDULE

C1	PROP. APPROX. 1 1/2″ ASPHALT CONCRETE SURFACE COURSE TYPE S9.5B, AT AN AVERAGE RATE OF 168 LBS. PER SQ. YD.
C2	PROP. APPROX. 3″ ASPHALT CONCRETE SURFACE COURSE TYPE S9.5B, AT AN AVERAGE RATE OF 168 LBS. PER SQ. YD. IN EACH OF TWO LAYERS.
C3	PROP. VAR. DEPTH ASPHALT CONCRETE SURFACE COURSE TYPE S9.5B, AT AN AVERAGE RATE OF 112 LBS. PER SQ. YD. PER 1″ DEPTH. TO BE PLACED IN LAYERS NOT TO EXCEED 1.5″ IN DEPTH.
E1	PROP. APPROX. 4″ ASPHALT CONCRETE BASE COURSE, TYPE B25.0C, AT AN AVERAGE RATE OF 456 LBS. PER SQ. YD.
E2	PROP. VAR. DEPTH ASPHALT CONCRETE BASE COURSE, TYPE B25.0C, AT AN AVERAGE RATE OF 114 LBS. PER SQ. YD. PER 1″ DEPTH. TO BE PLACE IN LAYERS NOT LESS THAN 3″ IN DEPTH OR GREATER THAN 5½″ IN DEPTH.
R	PROP. SHOULDER BERM GUTTER
T	EARTH MATERIAL.
U	EXISTING PAVEMENT.
W	VARIABLE DEPTH ASPHALT PAVEMENT (SEE WEDGING DETAIL)

NOTE: PAVEMENT EDGE SLOPES ARE 1:1 UNLESS SHOWN OTHERWISE.

CALYX
ENGINEERS + CONSULTANTS
6750 TRYON ROAD
CARY, NC 27518
phone: 919.851.1912
CALYXengineers.com
NC License # F-1333
Formerly Mulkey Engineers & Consultants

PROJECT REFERENCE NO.	SHEET NO.
17BP.4.R.66	2A-1

ROADWAY DESIGN ENGINEER
NORTH CAROLINA PROFESSIONAL ENGINEER SEAL 19759 STEPHEN C. BROWN
DocuSigned by: Stephen C. Brown
4/24/2018

PAVEMENT DESIGN ENGINEER
NORTH CAROLINA PROFESSIONAL ENGINEER SEAL 032142 COREY D. MCLAMB
DocuSigned by: Corey D. McLamb
4/24/2018

℄ –L– (SR 1428 WHITE OAK SWAMP RD.)

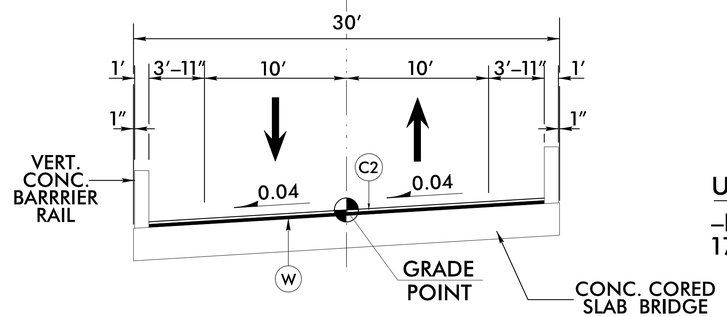

BRIDGE SKETCH NO. 1
BRIDGE #45

USE BRIDGE SKETCH NO. 1 AS FOLLOWS:

–L– STA. 17+21.93 (BEGIN BRIDGE) TO 17+92.07 (END BRIDGE)

℄ –L– (SR 1428 WHITE OAK SWAMP RD.)

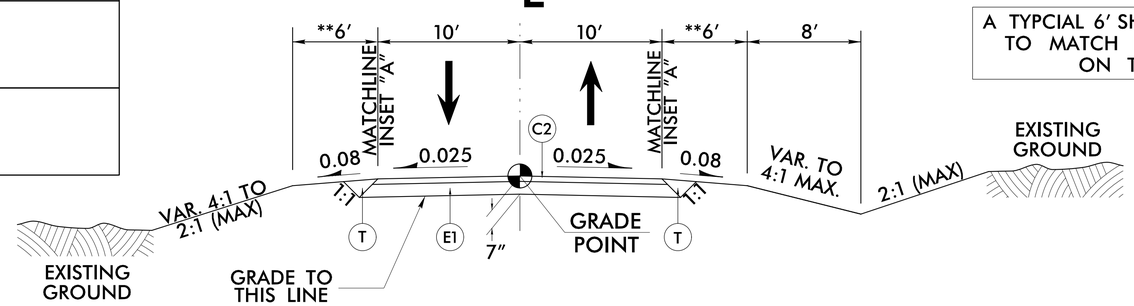

A TYPCIAL 6′ SHOULDER IS PROPOSED TO MATCH EXISTING SHOULDER ON THIS PROJECT.

TYPICAL SECTION NO. 1

USE TYPICAL SECTION NO. 1 AS FOLLOWS:

–L– STA. 15+00.00 TO 15+75.00
–L– STA. 15+75.00 TO 16+50.00 (RT. to 30″ LT.: See X–sect.)
–L– STA. 16+50.00 TO 17+21.93 (BEGIN BRIDGE)
–L– STA. 19+25.00 TO 19+75.00 (RT.)
–L– STA. 19+75.00 TO 20+25.00

**NOTE 1: USE INSET "A" FOR GUARDRAIL LOCATIONS WITHOUT SHOULDER BERM GUTTER

**NOTE 2: USE INSET "B" FOR GUARDRAIL LOCATIONS WITH SHOULDER BERM GUTTER

INSET "A"

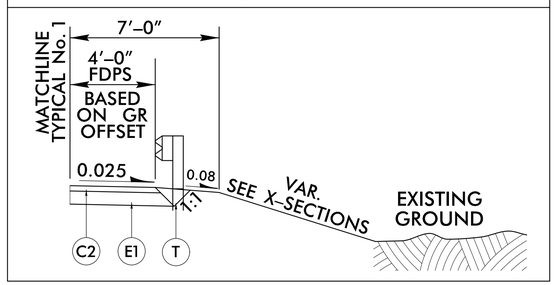

INSET "B"

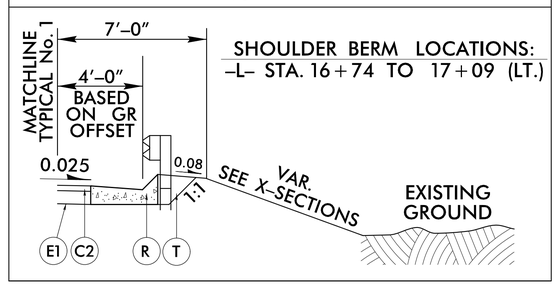

4/20/2018
C:\pwworking\2013\20130058.10\CLIENT\Roadway\Proj\Edgecombe 45_RDY_TYP.dgn

PROJECT REFERENCE NO.	SHEET NO.
17BP.4.R.66	2A-2

CALYX ENGINEERS + CONSULTANTS
6750 TRYON ROAD
CARY, NC 27518
phone: 919.851.1912
CALYXengineers.com
NC License # F-1333

ROADWAY DESIGN ENGINEER
NORTH CAROLINA PROFESSIONAL ENGINEER SEAL 15759 STEPHEN C. BRONDI
Docu Sign Envelope ID: 7221DF6F-28A9-4ED7-AB12-E5D9DAC2203F
4/24/2018

PAVEMENT DESIGN ENGINEER
NORTH CAROLINA PROFESSIONAL ENGINEER SEAL 032142 COREY D. MCLAMB
Docu Sign Envelope ID: 354E2DDD-D3D2-4E3A-A3A1-A3A1A3A1A3A1
4/24/2018

PAVEMENT SCHEDULE

C1	1.5″ S9.5B
C2	3″ S9.5B
C3	VARIABLE DEPTH S9.5B
E1	4″ B25.0C
E2	VARIABLE DEPTH B25.0C
R	SHOULDER BERM GUTTER
T	EARTH MATERIAL
U	EXISTING PAVEMENT
W	WEDGING

NOTES:
1) SEE SHEET 2A-1 FOR DETAILED PAVEMENT SCHEDULE.

2) PAVEMENT EDGE SLOPES ARE 1:1 UNLESS SHOWN OTHERWISE.

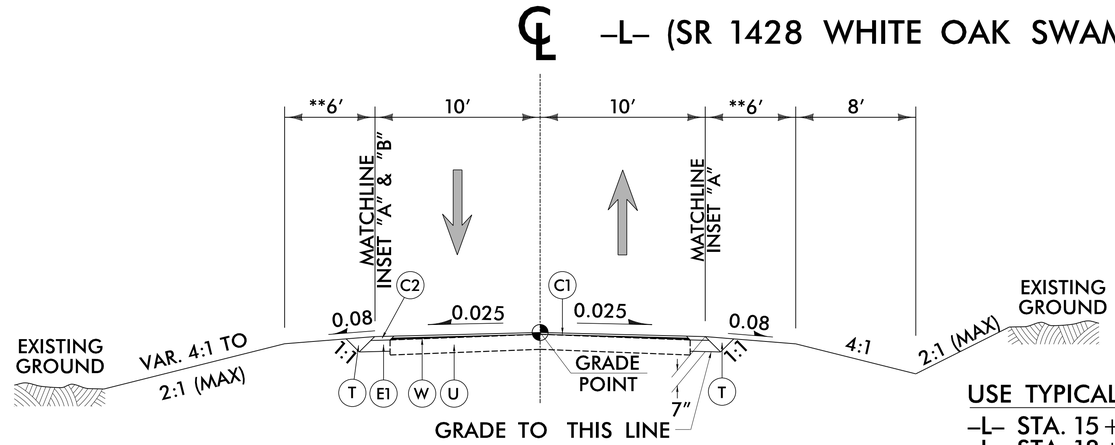

TYPICAL SECTION NO. 2

USE TYPICAL SECTION NO. 2 AS FOLLOWS:
–L– STA. 15+75.00 TO 16+50.00 (LT.)
–L– STA. 18+04.08 (END APPR. SLAB) TO 19+25.00
–L– STA. 19+25.00 TO 19+75.00 (LT.)

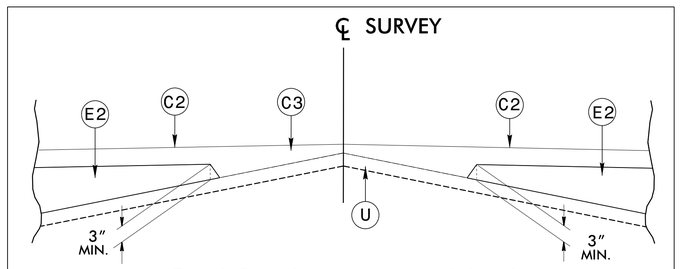

Detail Showing Method of Wedging on Roadway

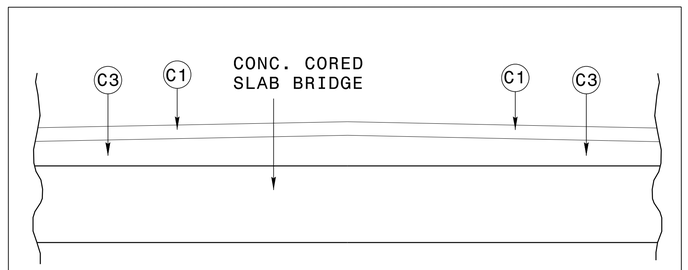

Detail Showing Method of Bridge Wedging

PROJECT REFERENCE NO.	SHEET NO.
17BP.4.R.66	2C-1

DOCUMENT NOT CONSIDERED FINAL UNLESS ALL SIGNATURES COMPLETED

STATE OF NORTH CAROLINA
DEPT. OF TRANSPORTATION
DIVISION OF HIGHWAYS
RALEIGH, N.C.

ROADWAY DETAIL DRAWING FOR
GUARDRAIL INSTALLATION

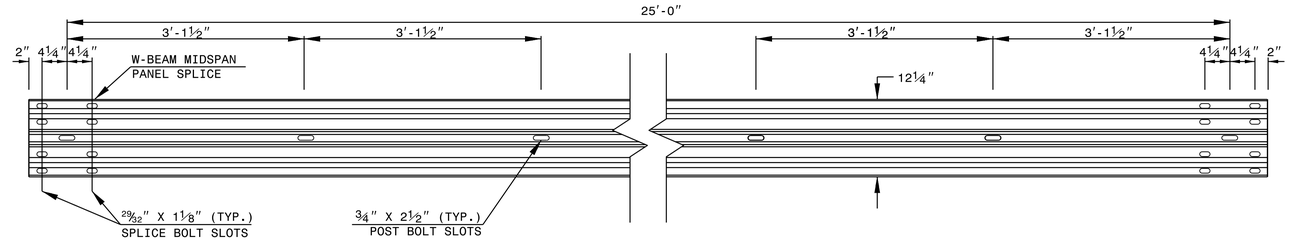

STANDARD W-BEAM GUARDRAIL

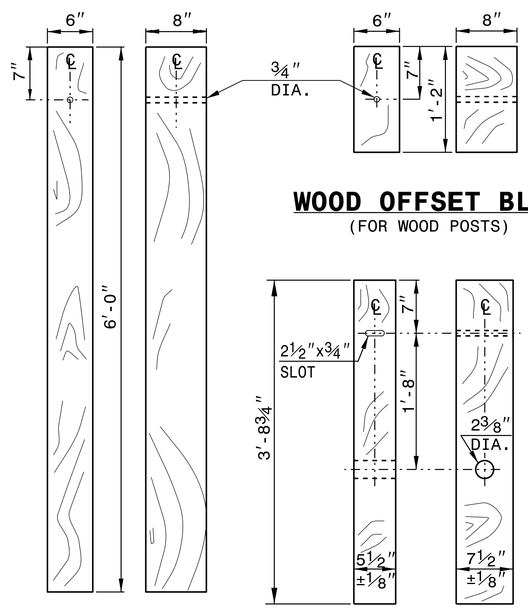

STANDARD LINE POST

WOOD OFFSET BLOCK
(FOR WOOD POSTS)

SHORT WOOD BREAKAWAY POST

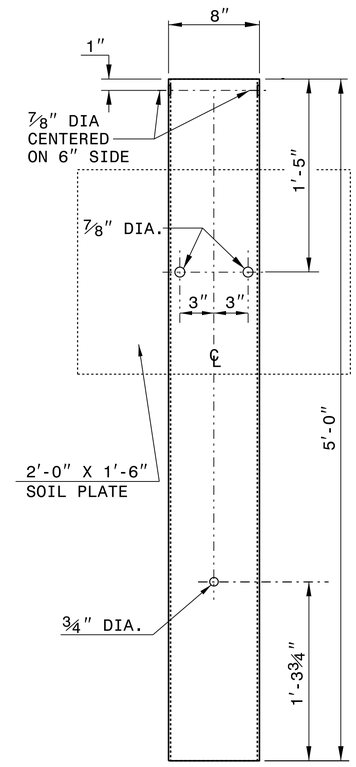

STEEL TUBE
TS 6"x8"x0.1875"

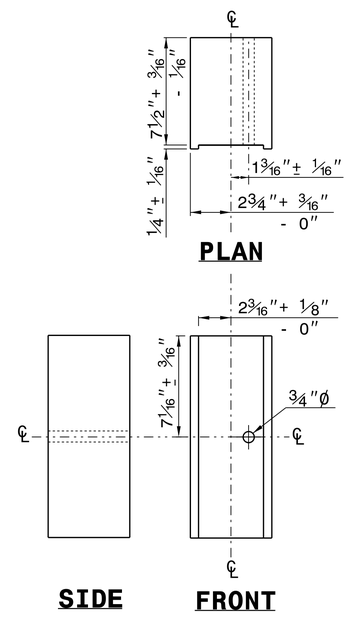

ROUTED OFFSET BLOCK

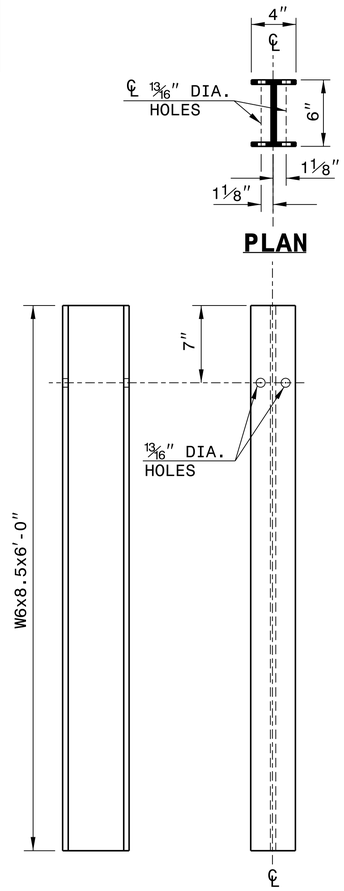

"W6" STEEL POST

SYSTEM PARTS

SHEET 6 OF 8
862D02

STATE OF NORTH CAROLINA
DEPT. OF TRANSPORTATION
DIVISION OF HIGHWAYS
RALEIGH, N.C.

ROADWAY DETAIL DRAWING FOR
GUARDRAIL INSTALLATION

SHEET 6 OF 8
862D02

CONTRACTS STANDARDS AND DEVELOPMENT UNIT
Office 919-707-6950 FAX 919-250-4119

SEE TITLE BLOCK

ORIGINAL BY: J.HOWERTON DATE: 3-7-2018
MODIFIED BY: DATE:
CHECKED BY: DATE:
FILE SPEC.:

STATE OF NORTH CAROLINA
DEPT. OF TRANSPORTATION
DIVISION OF HIGHWAYS
RALEIGH, N.C.

ROADWAY DETAIL DRAWING FOR
STRUCTURE ANCHOR UNITS
GUARDRAIL ANCHOR UNIT, TYPE III
FOR ATTACHMENT TO RAIL ON BRIDGE

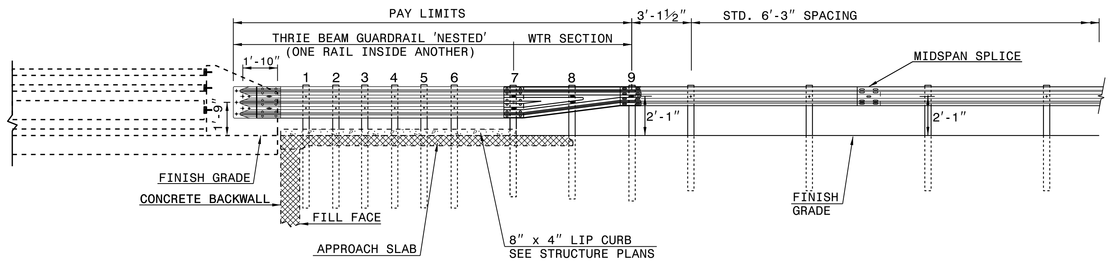

ELEVATION

NOTE:
**POST NOT REQUIRED FOR SKEW ANGLES GREATER THAN 150° OR LESS THAN 30° UNLESS OTHERWISE DIRECTED BY THE ENGINEER.
*THE DISTANCE FROM END OF BRIDGE RAIL TO CENTER LINE OF THE FIRST POST SHOULD BE 11½" IF CONCRETE BACKWALL IS NOT PRESENT.
-SHOULDER BERM GUTTER MUST BE INSTALLED TO THE LIMITS 8" x 4" LIP CURB IS SHOWN IF ANCHOR UNIT IS NOT ADJACENT TO AN APPROACH SLAB.
-MEASURE GUARDRAIL HEIGHT FROM THE TOP OF ADJACENT SURFACE (SHOULDER, BERM, OR GUTTER).
-LAP JOINTS IN THE DIRECTION OF TRAFFIC FLOW.
-SEE SHEET 3 FOR POST SECTIONS 1 THRU 9.

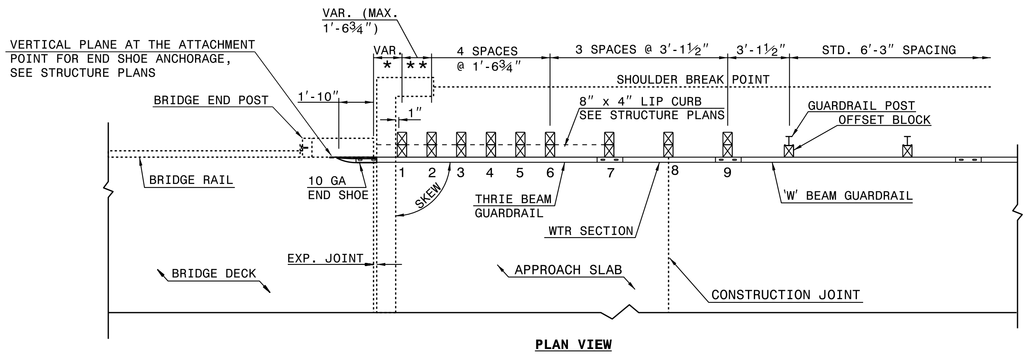

PLAN VIEW

GUARDRAIL ANCHOR UNIT, TYPE III FOR ATTACHMENT TO RAIL ON BRIDGE

SHEET 1 OF 7
862D03

STATE OF NORTH CAROLINA
DEPT. OF TRANSPORTATION
DIVISION OF HIGHWAYS
RALEIGH, N.C.

ROADWAY DETAIL DRAWING FOR
STRUCTURE ANCHOR UNITS
GUARDRAIL ANCHOR UNIT, TYPE III
FOR ATTACHMENT TO RAIL ON BRIDGE

SHEET 1 OF 7
862D03

STATE OF NORTH CAROLINA
DEPT. OF TRANSPORTATION
DIVISION OF HIGHWAYS
RALEIGH, N.C.

ROADWAY DETAIL DRAWING FOR
STRUCTURE ANCHOR UNITS
GUARDRAIL ANCHOR UNIT, TYPE III FOR ATTACHMENT TO
RAIL ON BRIDGE - SUB REGIONAL TIER

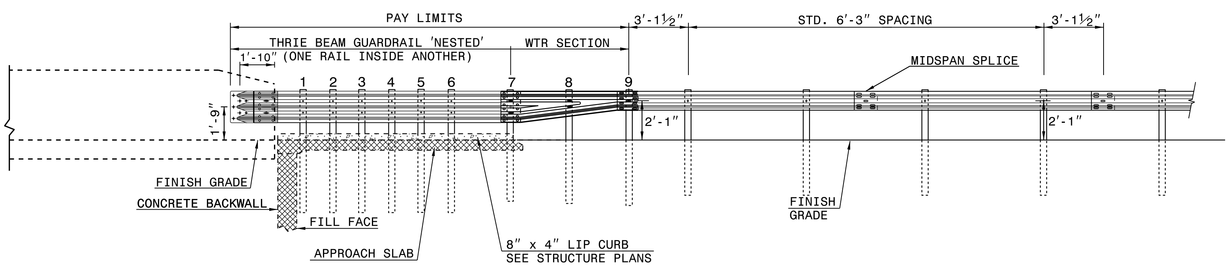

ELEVATION

NOTE:
**POST NOT REQUIRED FOR SKEW ANGLES GREATER THAN 150° OR LESS THAN 30° UNLESS OTHERWISE DIRECTED BY THE ENGINEER.
*THE DISTANCE FROM END OF BRIDGE RAIL TO CENTER LINE OF THE FIRST POST SHOULD BE 11½" IF CONCRETE BACKWALL IS NOT PRESENT.
-SHOULDER BERM GUTTER MUST BE INSTALLED TO THE LIMITS 8" x 4" LIP CURB IS SHOWN IF ANCHOR UNIT IS NOT ADJACENT TO AN APPROACH SLAB.
-MEASURE GUARDRAIL HEIGHT FROM THE TOP OF ADJACENT SURFACE (SHOULDER, BERM, OR GUTTER).
-LAP JOINTS IN THE DIRECTION OF TRAFFIC FLOW.
-SEE SHEET 3 FOR POST SECTIONS 1 THRU 9.

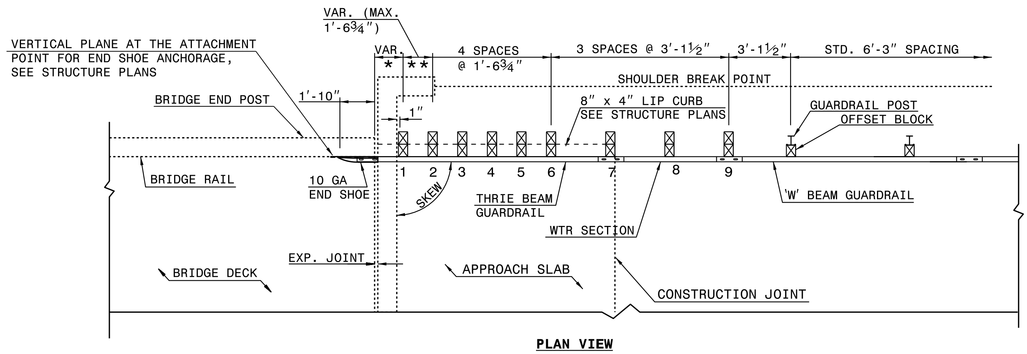

PLAN VIEW

GUARDRAIL ANCHOR UNIT, TYPE III FOR ATTACHMENT TO RAIL ON BRIDGE - SUB REGIONAL TIER

SHEET 2 OF 7
862D03

STATE OF NORTH CAROLINA
DEPT. OF TRANSPORTATION
DIVISION OF HIGHWAYS
RALEIGH, N.C.

ROADWAY DETAIL DRAWING FOR
STRUCTURE ANCHOR UNITS
GUARDRAIL ANCHOR UNIT, TYPE III FOR ATTACHMENT TO
RAIL ON BRIDGE - SUB REGIONAL TIER

SHEET 2 OF 7
862D03

SEE TITLE BLOCK

ORIGINAL BY: J. HOWERTON DATE: 06-22-12
MODIFIED BY: DATE:
CHECKED BY: DATE:
FILE SPEC.:

CONTRACT STANDARDS AND DEVELOPMENT UNIT
Office 919-707-6950 FAX 919-250-4119

DOCUMENT NOT CONSIDERED FINAL UNLESS ALL SIGNATURES COMPLETED

NORTH CAROLINA PROFESSIONAL SEAL 029366 ENGINEER
DocuSigned by: Jennifer Howerton
4/24/2018

PROJECT REFERENCE NO. 17BP.4.R.66
SHEET NO. 2C-2

STATE OF NORTH CAROLINA
DEPT. OF TRANSPORTATION
DIVISION OF HIGHWAYS
RALEIGH, N.C.

ROADWAY DETAIL DRAWING FOR
GUARDRAIL ANCHOR UNIT
GUARDRAIL ANCHOR UNIT TYPE B-77
FOR F-SHAPE BARRIER

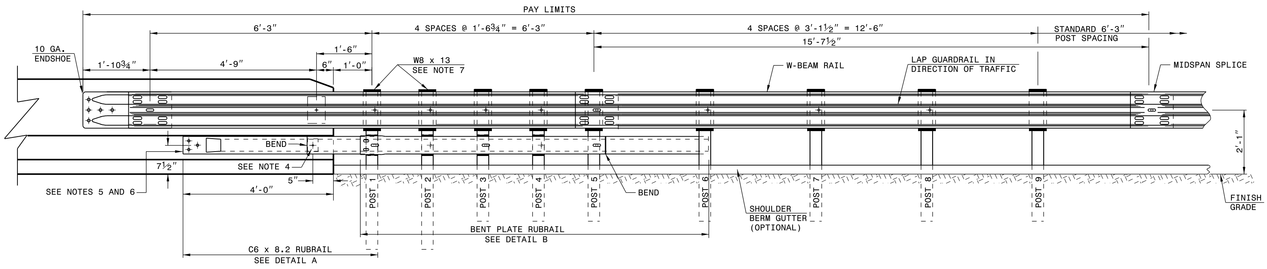

ELEVATION

GENERAL NOTES:
1) POSTS 1 THROUGH 5 REQUIRE AN ADDITIONAL HOLE TO ATTACH LOWER BLOCKOUTS AND/OR RUBRAIL.
2) RUBRAIL BLOCKOUTS LOCATED ON POSTS 1 THROUGH 4 ARE OFFSET DRILLED AND SECURED WITH ⅝" BUTTONHEAD BOLTS (SEE CHART FOR BOLT LENGTHS). SECURE BLOCKS ONLY TO POSTS 2 AND 4. SECURE RUBRAIL AND BLOCKOUTS TO POSTS 1 AND 3. RUBRAIL IS SECURED TO POST 5 WITH A ⅝" x 4½" BUTTONHEAD BOLT. RUBRAIL IS FLARED TO BACK OF POST 6 AND NOT SECURED.
3) STEEL SPACER TUBE IS A SCHEDULE 40 GALVANIZED PIPE 6" INSIDE DIAMETER x 9" LONG. ATTACH TUBE TO GUARDRAIL ONLY WITH ⅝" x 1¼" LONG BUTTONHEAD BOLT AND RECTANGULAR PLATE WASHER.
4) SEE DETAIL D FOR SLOPED RUBRAIL BLOCKOUT. BLOCKOUT IS ATTACHED TO RAIL ELEMENT ONLY. USE ⅜" x 3" LAG BOLT WITH FLAT WASHER.
5) SHOP FABRICATE THE C6 x 8.2 RUBRAIL END TO BE CONSISTENT WITH THE SLOPE OF THE F SHAPE AND ATTACH FLUSH WITH THE SLOPED TOE OF THE BARRIER OR BRIDGE RAIL.
6) ANCHORAGE:
   (a) AT EXISTING BRIDGE RAIL AND NEW OR EXISTING BARRIERS, ANCHOR RUBRAIL USING THREE ⅝" x 6" CHEMICALLY ANCHORED BOLTS WITH WASHERS. MAXIMUM PROJECTION FOR BOLTS IS ½".
   (b) AT EXISTING BRIDGE RAIL AND NEW OR EXISTING BARRIERS, ANCHOR THE W-BEAM END SHOE USING A 4 BOLT HOLD DOWN PLATE (SEE STD. DWG. 862.04). A 4 BOLT INSERT ASSEMBLY IS ALLOWED ON PRECAST REINFORCED CONCRETE BARRIER (SEE STD. DWG. 857.01). INSTALL THE W-BEAM END SHOE BEHIND THE NESTED W-BEAM ELEMENTS.
   (c) AT NEW BRIDGE RAIL, ANCHOR THE W-BEAM END SHOE AND RUBRAIL AS DETAILED ON THE STRUCTURE PLANS.
7) POSTS 1 AND 2 ARE W8 x 13, 7'-6" LONG. ALL OTHER POSTS IN THE ANCHOR UNIT ARE W6 x 8.5.

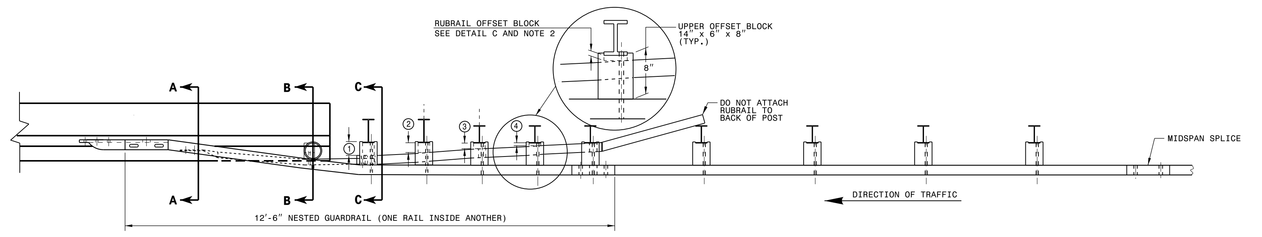

PLAN

GUARDRAIL ANCHOR UNIT TYPE B-77

SHEET 4 OF 7
862D03

STATE OF NORTH CAROLINA
DEPT. OF TRANSPORTATION
DIVISION OF HIGHWAYS
RALEIGH, N.C.

ROADWAY DETAIL DRAWING FOR
STRUCTURE ANCHOR UNIT
GUARDRAIL ANCHOR UNIT TYPE B-77
FOR F-SHAPE BARRIER

SHEET 4 OF 7
862D03

STATE OF NORTH CAROLINA
DEPT. OF TRANSPORTATION
DIVISION OF HIGHWAYS
RALEIGH, N.C.

ROADWAY DETAIL DRAWING FOR
STRUCTURE ANCHOR UNITS
GUARDRAIL ANCHOR UNIT, TYPE III

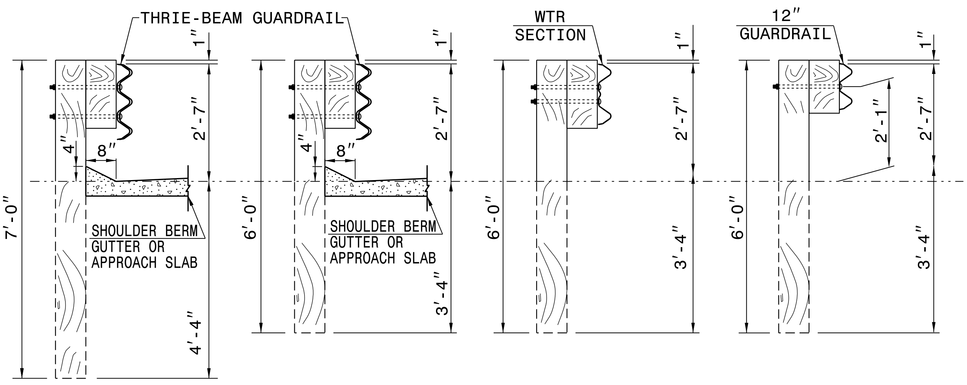

SECTION OF THRIE BEAM POSTS 1 THRU 6

SECTION OF THRIE BEAM POST 7

SECTION OF WTR BEAM POST 8

SECTION OF 'W' BEAM POST 9

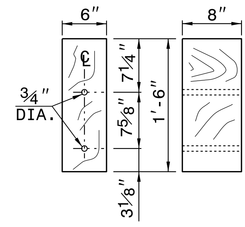

THRIE BEAM OFFSET BLOCK

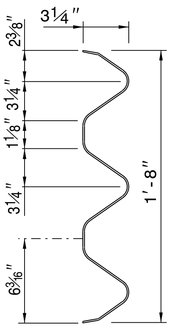

THRIE-BEAM SECTION

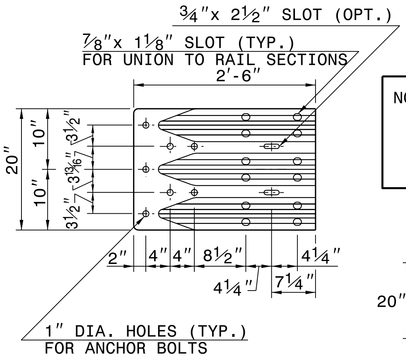

END SHOE

NOTE: THE MID POST AND OFFSET BLOCK OF THE WTR SECTION WILL REQUIRE SPECIAL BOLT HOLE DRILLING IN THE THRIE BEAM OFFSET BLOCK AND LINE POST.

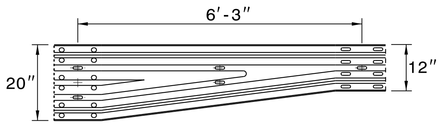

WTR SECTION
ELEVATION VIEW

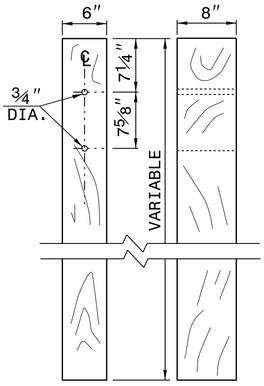

THRIE BEAM LINE POST

SHEET 3 OF 7
862D03

STATE OF NORTH CAROLINA
DEPT. OF TRANSPORTATION
DIVISION OF HIGHWAYS
RALEIGH, N.C.

ROADWAY DETAIL DRAWING FOR
STRUCTURE ANCHOR UNITS
GUARDRAIL ANCHOR UNIT, TYPE III

SHEET 3 OF 7
862D03

SEE TITLE BLOCK

ORIGINAL BY: J. HOWERTON DATE: 06-22-12
MODIFIED BY: DATE:
CHECKED BY: DATE:
FILE SPEC.:

CONTRACT STANDARDS AND DEVELOPMENT UNIT
Office 919-707-6950 FAX 919-250-4119

DOCUMENT NOT CONSIDERED FINAL UNLESS ALL SIGNATURES COMPLETED

NORTH CAROLINA PROFESSIONAL SEAL 022966 ENGINEER JAMES S. HOWERTON 4/24/2018

PROJECT REFERENCE NO. 17BP.4.R.66
SHEET NO. 2C-3

COMPUTED BY:	E. Stewart	DATE:	03/28/2017
CHECKED BY:	S. Browde	DATE:	03/29/2018

DIVISION OF HIGHWAYS
STATE OF NORTH CAROLINA

PROJECT REFERENCE NO.	SHEET NO.
17BP.4.R.66	3B-1

"N" = DISTANCE FROM EDGE OF LANE TO FACE OF GUARDRAIL
TOTAL SHOULDER WIDTH = DISTANCE FROM EDGE OF TRAVEL LANE TO SHOULDER BREAK POINT.
FLARE LENGTH = DISTANCE FROM LAST SECTION OF PARALLEL GUARDRAIL TO END OF GUARDRAIL
W = TOTAL WIDTH OF FLARE FROM BEGINNING OF TAPER TO END OF GUARDRAIL

GUARDRAIL SUMMARY

G = GATING IMPACT ATTENUATOR TYPE 350
NG = NON-GATING IMPACT ATTENUATOR TYPE 350

SURVEY LINE	BEG. STA.	END STA.	LOCATION	LENGTH			WARRANT POINT		"N" DIST. FROM E.O.L.	TOTAL SHOUL WIDTH	FLARE LENGTH		W		ANCHORS								IMPACT ATTENUATOR TYPE 350		SINGLE FACED CONCRETE BARRIER	REMOVE EXISTING GUARDRAIL	REMOVE & STOCKPILE EXISTING GUARDRAIL	REMARKS
				STRAIGHT	SHOP CURVED	DOUBLE FACED	APPROACH END	TRAILING END			APPROACH END	TRAILING END	APPROACH END	TRAILING END	TYPE III	XI	GREU TL-3	M-350	XIII	CAT-1	VI MOD	BIC	G	NG				
-L-	16+41.18	17+22.43	RT	81.25			17+22.43		4'	7'	50'		1'		1		1											50:1 FLARE TO TYPE III ANCHOR UNIT
-L-	16+40.16	17+21.41	LT	81.25				17+21.41	4'	7'		50'		1'	1		1											50:1 FLARE TO TYPE III ANCHOR UNIT
-L-	17+91.57	18+72.82	RT	81.25				17+91.57	4'	7'		50'		1'	1		1											50:1 FLARE TO TYPE III ANCHOR UNIT
-L-	17+92.58	18+73.83	LT	81.25			17+92.58		4'	7'	50'		1'		1		1											50:1 FLARE TO TYPE III ANCHOR UNIT
GUARDRAIL TOTALS:				325.00											4		4											
		ANCHOR DEDUCTIONS:																										
		TYPE III: 4 @ 18.75' EA		75.00																								
		GREU TL-3: 4 @ 50' EA		200.00																								
		ANCHOR TOTALS:		275.00																								
		GUARDRAIL GRAND TOTALS:		50.00											4		4											
			SAY:	75.00																								
		ADDITIONAL GUARDRAIL POSTS = 5																										

ASPHALT PAVEMENT REMOVAL SUMMARY

LINE	STATION	STATION	LOCATION	AREA	SQ. YDS.
-L-	15+00.00	15+75.00	CL	1,425.00	158.33
-L-	15+75.00	16+50.00	RT TO 30" LT	900.00	100.00
-L-	16+50.00	17+22.00	CL	1,366.67	151.85
-L-	19+25.00	19+75.00	RT	475.00	52.78
-L-	19+75.00	20+25.00	CL	950.00	105.56
				TOTAL	568.52
				SAY	600

EARTHWORK SUMMARY

LINE	STATION	STATION	UNCL. EXCAV.	EMBANK. +%	BORROW	WASTE
-L-	15+00.00	17+22.00	83	28	0	56
-L-	17+92.00	20+25.00	35	44	0	-9
PROJECT TOTALS:			118	72	0	47
Waste in Lieu of Borrow					0	0
GRAND TOTALS:			118		0	47
SAY:			130		0	

Note: Approximate quantities only. Unclassified Excavation, Borrow Excavation, Fine Grading, Clearing and Grubbing, and Removal of Asphalt Pavement will be paid for at the contract lump sum price for grading.

SHOULDER BERM GUTTER SUMMARY

LINE	STATION	STATION	LOCATION	LENGTH
-L-	16+74.00	17+09.00	LT	35.00
			TOTAL	35.00
			SAY	40

COMPUTED BY:	E. Stewart, EI	DATE:	5/12/2017
CHECKED BY:	S. Browde, PE	DATE:	5/12/2017

NORTH CAROLINA DEPARTMENT OF TRANSPORTATION
DIVISION OF HIGHWAYS

PROJECT NO.	SHEET NO.
17BP.4.R.66	3D-1

Note: Invert Elevations indicated are for Bid Purposes only and shall not be used for project construction stakeout.

LIST OF PIPES, ENDWALLS, ETC. (FOR PIPES 48 INCHES & UNDER)

STATION	LOCATION (LT, RT, OR CL)	STRUCTURE NO. FROM	STRUCTURE NO. TO	TOP ELEVATION	INVERT ELEVATION	INVERT ELEVATION	SLOPE CRITICAL	DRAINAGE PIPE (RCP, CSP, CAAP, HDPE, or PVC) 12"	15"	18"	24"	30"	36"	42"	48"	DO NOT USE RCP	DO NOT USE CSP	DO NOT USE CAAP	DO NOT USE HDPE
SIZE																			
THICKNESS OR GAUGE																			
	LT	0402	0401		59.5	59.4	0.3			16							X	X	X
-L- 16+80.05	LT	0402		62.5															
	LT	0403	0402		59.6	59.5	0.3												
-L- 17+04.90	LT	0403		62.6															
SHEET TOTALS										16									

STATION	C.S. PIPE 12"	15"	18"	24"	30"	36"	42"	48"	R.C. PIPE CLASS III 12"	15"	18"	24"	30"	36"	42"	48"	R.C. PIPE CLASS IV 12"	15"	18"	24"	30"	36"	42"	48"
SIZE																								
THICKNESS OR GAUGE	.064	.064	.064	.064	.079	.079	.109	.109																
-L- 16+80.05																								
																			24					
-L- 17+04.90																								
SHEET TOTALS																			0					

STATION	** " R.C. PIPE (CLASS V)	**** RC PIPE CULVERTS, CONTRACTOR DESIGN	**** RC PIPE CULVERTS, CONTRACTOR DESIGN	15" SIDE DRAIN PIPE	18" SIDE DRAIN PIPE	ENDWALLS STD. 838.01 838.11 OR STD. 838.80 (UNLESS NOTED OTHERWISE) CU. YARDS R.C.P.	C.S.P.	QUANTITIES FOR DRAINAGE STRUCTURES *TOTAL L.F. FOR PAY QUANTITY SHALL BE COL. "A" + (1.3 X COL. "B") PER EACH (0' THRU 5.0')	LIN. FT. A 5.0' THRU 10.0'	B 10.0' AND ABOVE	C.B. STD. 840.01 OR STD. 840.02	FRAME, GRATES, AND HOOD STANDARD 840.03 TYPE OF GRATE E	F	G	CONCRETE TRANSITIONAL SECTION DROP INLET	CATCH BASIN	D.I. STD. 840.14 OR STD. 840.15	D.I. FRAME WITH TWO GRATES STD. 840.16	G.D.I. TYPE "A" STD. 840.17 OR 840.26	G.D.I. TYPE "B" STD. 840.18 OR 840.27	G.D.I. TYPE "D" STD. 840.19 OR 840.28	G.D.I. FRAME WITH GRATE STD. 840.20	G.D.I. FRAME WITH TWO GRATES STD. 840.22	G.D.I. (N.S.) FRAME WITH GRATE STD. 840.24	G.D.I. (N.S.) FRAME WITH TWO GRATES STD. 840.24	J.B. STD. 840.31 OR 840.32	T.B.G.D.I. FRAME WITH TWO GRATES STD. 840.35	G.D.I. (N.S. FLAT) FRAME WITH TWO GRATES STD. 840.29	CONC. & BRICK PIPE PLUG, C.Y. STD. 840.71	CONC. COLLARS CL. "B" C.Y. STD. 840.72	PIPE REMOVAL LIN. FT.	REMARKS
SIZE																								
THICKNESS OR GAUGE																								
-L- 16+80.05								1															1	1
-L- 17+04.90								1															1	1
SHEET TOTALS								2															2	2

STATION	CONC. & BRICK PIPE PLUG, C.Y. STD. 840.71	CONC. COLLARS CL. "B" C.Y. STD. 840.72	PIPE REMOVAL LIN. FT.
SHEET TOTALS			0

ABBREVIATIONS

C.B.	CATCH BASIN
N.D.I.	NARROW DROP INLET
D.I.	DROP INLET
G.D.I.	GRATED DROP INLET
G.D.I.(N.S.)	(NARROW SLOT)
J.B.	JUNCTION BOX
M.H.	MANHOLE
T.B.D.I.	TRAFFIC BEARING DROP INLET
T.B.J.B.	TRAFFIC BEARING JUNCTION BOX

8/17/99

REVISIONS

CALYX
ENGINEERS + CONSULTANTS
6750 TRYON ROAD
CARY, NC 27518
phone: 919.851.1912
CALYXengineers.com
NC License # F-1333

PROJECT REFERENCE NO.	SHEET NO.
17BP.4.R.66	4
R/W SHEET NO.	

ROADWAY DESIGN ENGINEER
Docu Signed by: Travis E. Brown Jr.
5/24/2018 10:12:26 AM EDT 15759
NORTH CAROLINA PROFESSIONAL ENGINEER SEAL STEPHEN C. BROWDE
4/24/2018

HYDRAULICS ENGINEER
Docu Signed by: David P. Bocker
9/20/2018 8:09:40 AM EDT 029884
NORTH CAROLINA PROFESSIONAL ENGINEER SEAL DAVID P. BOCKER
4/24/2018

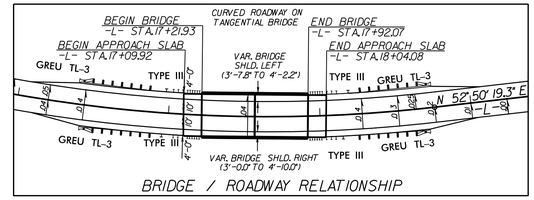

BRIDGE / ROADWAY RELATIONSHIP

SEE SHEET S-1 THRU S-16 FOR STRUCTURE PLANS

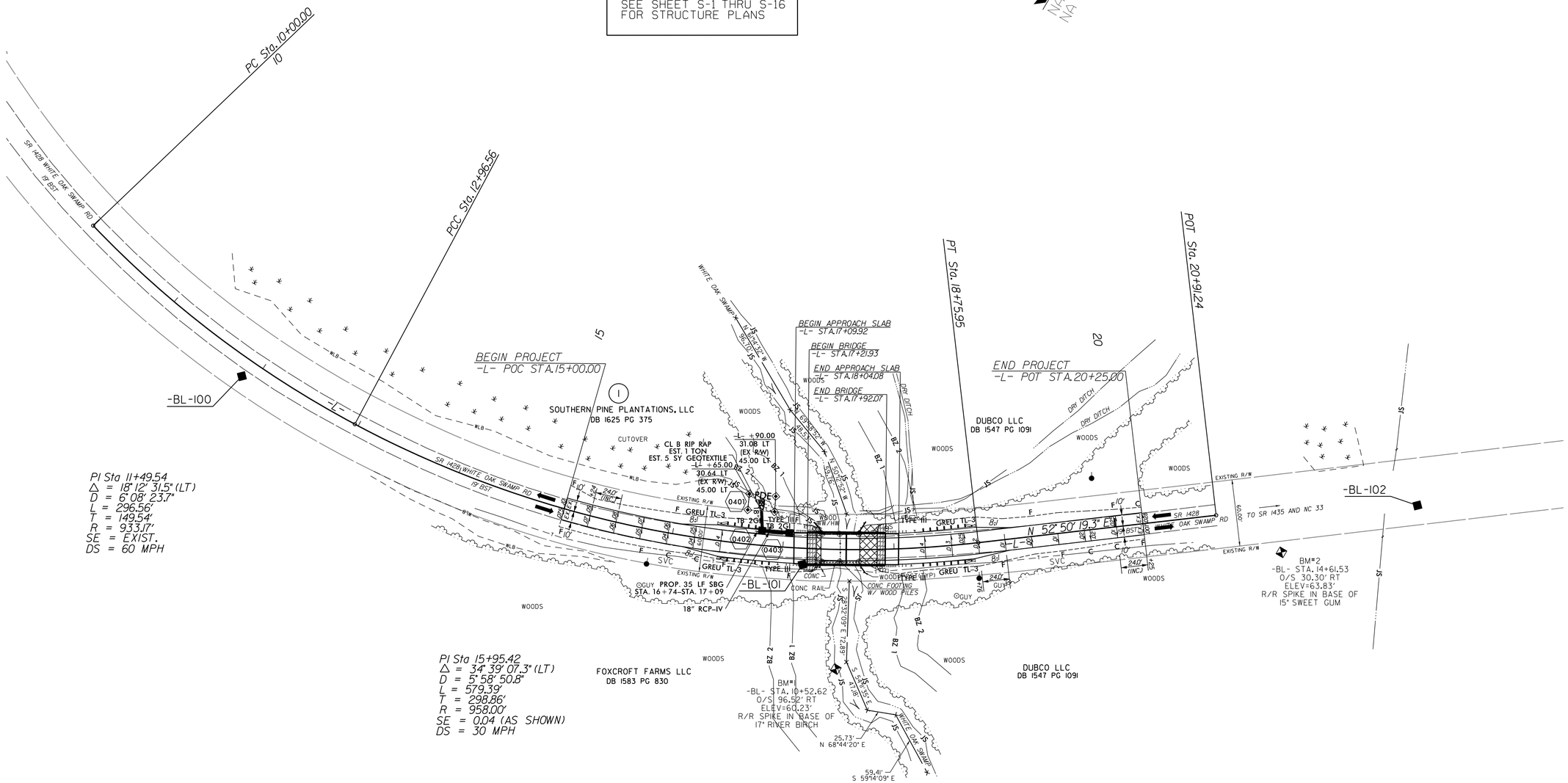

RIGHT OF WAY AREA DATA

PARCEL NO.	PROPERTY OWNERS NAMES	TOTAL AREA	AREA TAKEN	AREA REMAINING RT.	AREA REMAINING LT.	CONST. EASE.	PERM. DRAIN. EASE.	TEMP. DRAIN. EASE.
1	SOUTHERN PINE PLANTATIONS, LLC						399 SF	

NOTE: FOR –L– PROFILE SEE SHEET 5

4/4/2018
R:\Roadway\Proj\Edgecombe 45_RDY_PSH04.dgn
ealliamson

PROJECT REFERENCE NO.	SHEET NO.
17BP.4.R.66	05

ROADWAY DESIGN ENGINEER	HYDRAULICS ENGINEER
NORTH CAROLINA PROFESSIONAL ENGINEER 15759 STEPHEN C. BRONDO	NORTH CAROLINA PROFESSIONAL ENGINEER 029984 DAVID P. BOCKER
4/24/2018	4/24/2018

BRIDGE HYDRAULIC DATA

DESIGN DISCHARGE	=	1,500	CFS
DESIGN FREQUENCY	=	25	YRS
DESIGN HW ELEVATION	=	62.40	FT
BASE DISCHARGE	=	2,200	CFS
BASE FREQUENCY	=	100	YRS
BASE HW ELEVATION	=	64.01	FT
OVERTOPPING DISCHARGE	=	2,020	CFS
OVERTOPPING FREQUENCY	>	50	YRS
OVERTOPPING ELEVATION	=	63.70	FT
DATE OF SURVEY	=	3/8/2016	
W.S.ELEVATION AT DATE OF SURVEY	=	55.60	FT

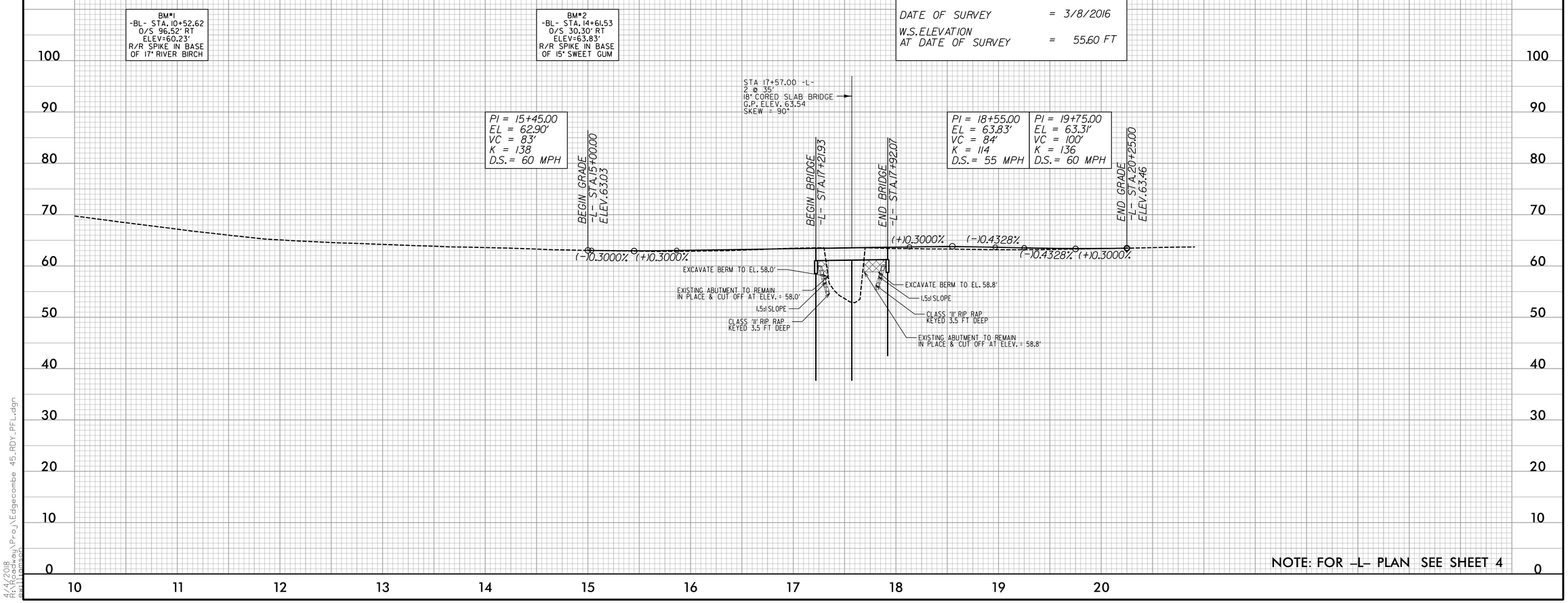

NOTE: FOR -L- PLAN SEE SHEET 4

5/14/99

4/4/2018
R:\Hydraulics\Proj\Edgecombe 45_RDY_PFL.dgn

TRAFFIC CONTROL FOR TEMPORARY ROAD CLOSURE

NOTE: WING BARRICADES WITH SIGN R11-3 SHOULD ALSO BE USED AT SIDE ROADS BETWEEN THE DETOUR POINT AND THE POINT OF CLOSURE

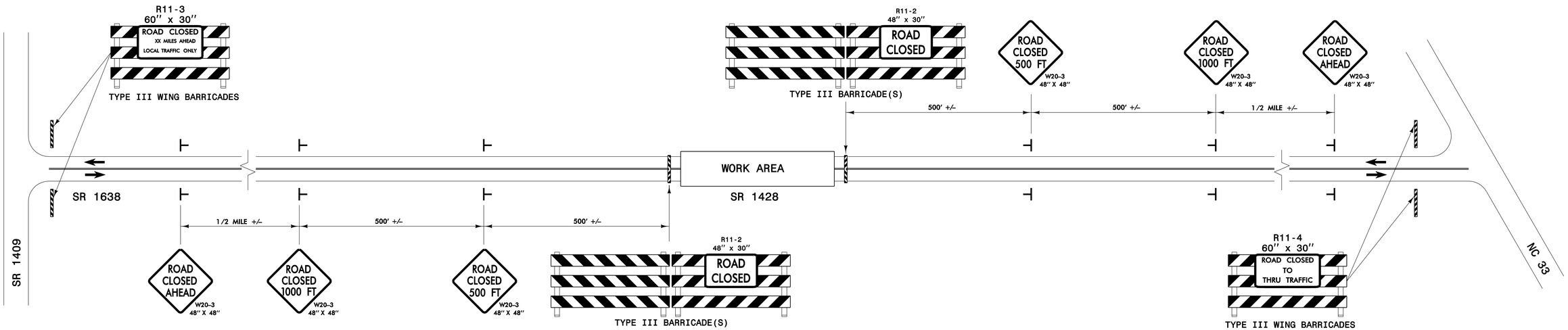

LEGEND

⊢ STATIONARY SIGN

← DIRECTION OF TRAFFIC FLOW

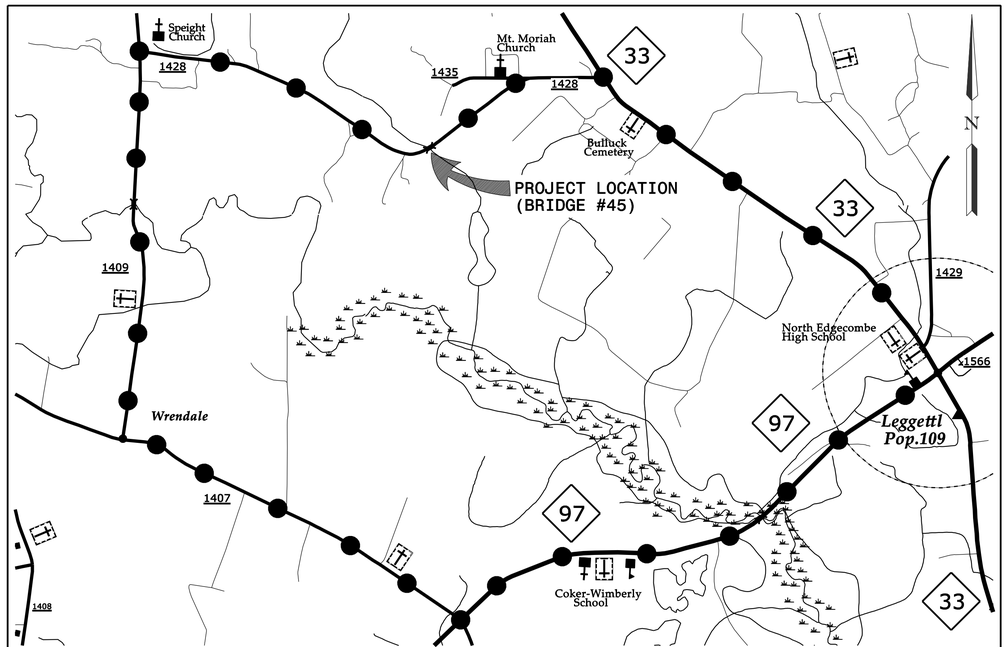

VICINITY MAP

(NOT TO SCALE)

DETOUR ROUTE (APPROXIMATE LENGTH = 8 MILES)

GENERAL NOTES

1- INSTALLATION OF TEMPORARY ROUTE MARKERS, DESTINATION SIGNS AND ANY NECESSARY MODIFICATIONS TO EXISTING OR PROPOSED REGULATORY OR WARNING SIGNS WILL BE MADE BY OTHERS (STATE OR CITY FORCES) UNLESS OTHERWISE DESIGNATED IN PLANS. PROVIDE A MINIMUM 21 CALENDAR DAY NOTICE TO STATE FORCES BEFORE A ROADWAY IS CLOSED TO TRAFFIC SUCH THAT NECESSARY PROVISIONS CAN BE MADE TO INFORM LOCAL EMERGENCY AND LAW ENFORCEMENT PERSONNEL, SCHOOLS OR ANY OTHER PARTIES AFFECTED BY THE ROAD CLOSURE.

2- DO NOT INSTALL ADVANCE WARING SIGNS MORE THAN 3 DAYS PRIOR TO BEGINING OF WORK.

3- INSTALL SIGNS BEFORE THE BARRICADES WHEN CLOSING THE ROADWAY TO TRAFFIC. REMOVE BARRICADES BEFORE SIGNS WHEN OPENING THE ROADWAY TO TRAFFIC. INSTALL/REMOVE SIGNS AND BARRICADES WITHIN THE SAME CALENDAR DAY.

4- POSITION WING BARRICADES ON THE SHOULDERS AND SLOPE THE STRIPES DOWNWARD IN THE DIRECTION TOWARD WHICH TRAFFIC MUST TURN IN DETOURING.

5- USE ADDITIONAL TYPE III BARRICADES IN STAGGERED LOCATIONS SUPPLEMENTED WITH SIGN R11-4 "ROAD CLOSED TO THRU TRAFFIC" IN THE EVENT THAT TRAFFIC MUST BE MAINTAINED BEYOND THE DETOUR POINT.

6- DO NOT DISPLAY FRACTIONS OR DECIMALS ON SIGN R11-3 "ROAD CLOSED XX MILES AHEAD".

7- USE PORTABLE SIGNS IF ROAD CLOSURE IS TO BE IMPLEMENTED FOR LESS THAN ONE DAY OR FOR EMERGENCIES.

PROJECT NO. 17BP.4.R.66

EDGECOMBE COUNTY

STATION: 17+57.00 -L-

NORTH CAROLINA PROFESSIONAL ENGINEER SEAL 19661 L. KEVIN AUSTIN

DocuSigned by: L. Kevin Austin 72F1B3720EA4BB...

4/24/2018

PLANS PREPARED BY:

CALYX ENGINEERS + CONSULTANTS
6750 TRYON ROAD
CARY, NC 27518
phone: 919.851.1912
CALYXengineers.com
NC License # F-1333

STATE OF NORTH CAROLINA
DEPARTMENT OF TRANSPORTATION
RALEIGH

TRAFFIC MANAGEMENT PLAN

27'-10" CLEAR ROADWAY - 90° SKEW

REVISIONS						SHEET NO.
NO.	BY:	DATE:	NO.	BY:	DATE:	TMP-1
1			3			TOTAL SHEETS
2			4			

DOCUMENT NOT CONSIDERED FINAL UNLESS ALL SIGNATURES COMPLETED

DRAWN BY :	W. B. ALLEN	DATE :	10/15
CHECKED BY :	L. K. AUSTIN	DATE :	10/15
DESIGN ENGINEER OF RECORD:	L. K. AUSTIN	DATE :	5/17

$DATE$ $TIME$ $FILE$

TIP PROJECT: 17BP.4.R.66

STATE	STATE PROJECT REFERENCE NO.	SHEET NO.	TOTAL SHEETS
N.C.	17BP.4.R.66	EC-1	

STATE PROJ. NO.	F.A. PROJ. NO.	DESCRIPTION

STATE OF NORTH CAROLINA
DIVISION OF HIGHWAYS

PLAN FOR PROPOSED
HIGHWAY EROSION CONTROL

EDGECOMBE COUNTY

LOCATION: REPLACEMENT OF BRIDGE 45 OVER WHITE OAK SWAMP ON SR 1428 (WHITE OAK SWAMP RD.)

TYPE OF WORK: GRADING, DRAINAGE, PAVING AND STRUCTURE

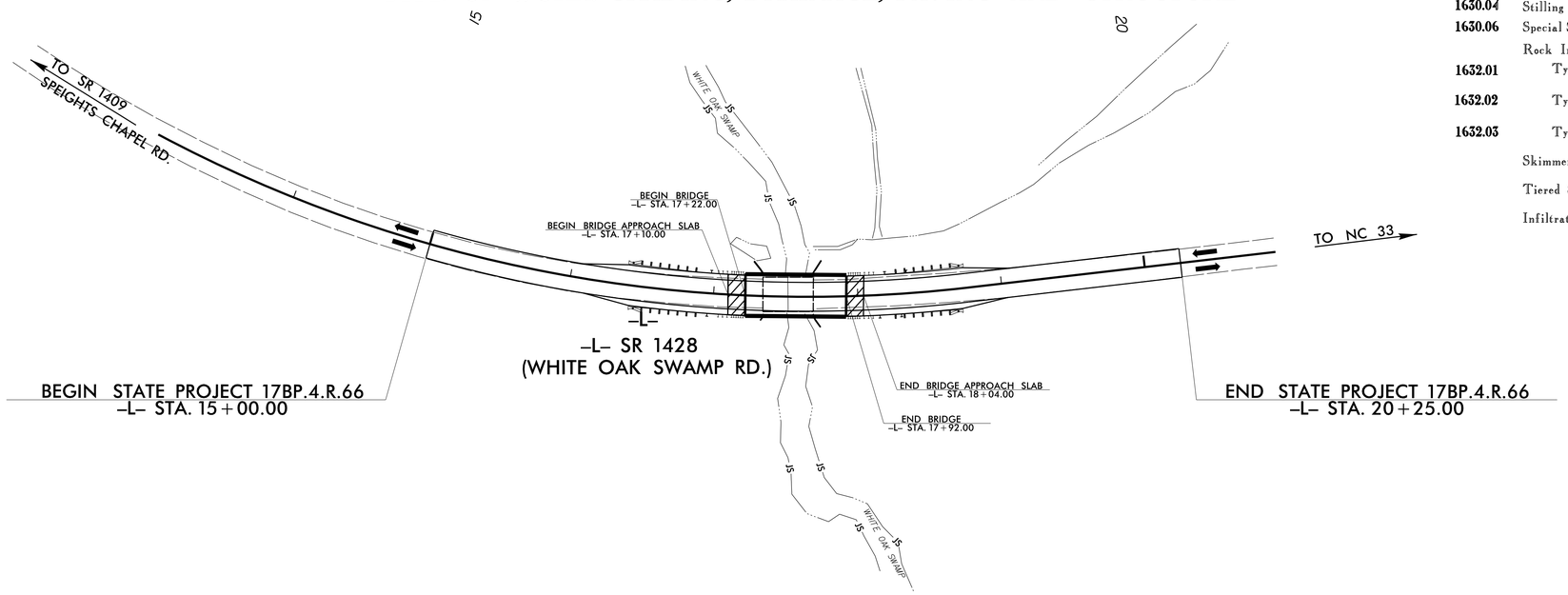

EROSION AND SEDIMENT CONTROL MEASURES

Std. #	Description	Symbol
1630.03	Temporary Silt Ditch	TSD
1630.05	Temporary Diversion	TD
1605.01	Temporary Silt Fence	
1606.01	Special Sediment Control Fence	
1622.01	Temporary Berms and Slope Drains	
1630.02	Silt Basin Type B	
1633.01	Temporary Rock Silt Check Type-A	
	Temporary Rock Silt Check Type-A with Matting and Polyacrylamide (PAM)	
1633.02	Temporary Rock Silt Check Type-B	
	Wattle/ Coir Fiber Wattle	EW CFW
	Wattle/ Coir Fiber Wattle with Polyacrylamide (PAM)	
1634.01	Temporary Rock Sediment Dam Type-A	
1634.02	Temporary Rock Sediment Dam Type-B	
1635.01	Rock Pipe Inlet Sediment Trap Type-A	
1635.02	Rock Pipe Inlet Sediment Trap Type-B	
1630.04	Stilling Basin	
1630.06	Special Stilling Basin	
	Rock Inlet Sediment Trap:	
1632.01	Type A	A
1632.02	Type B	B
1632.03	Type C	C
	Skimmer Basin	SB
	Tiered Skimmer Basin	SB
	Infiltration Basin	

THIS PROJECT CONTAINS EROSION CONTROL PLANS FOR CLEARING AND GRUBBING PHASE OF CONSTRUCTION.

THIS PROJECT HAS BEEN DESIGNED TO SENSITIVE WATERSHED STANDARDS.

ENVIRONMENTALLY SENSITIVE AREA(S) EXIST ON THIS PROJECT

Refer To E. C. Special Provisions for Special Considerations.

GRAPHIC SCALE

0
PLANS

0
PROFILE (HORIZONTAL)

0
PROFILE (VERTICAL)

ROADSIDE ENVIRONMENTAL UNIT
DIVISION OF HIGHWAYS
STATE OF NORTH CAROLINA

THESE EROSION AND SEDIMENT CONTROL PLANS COMPLY WITH THE REGULATIONS SET FORTH BY THE NCG-010000 GENERAL CONSTRUCTION PERMIT EFFECTIVE AUGUST 1, 2016 ISSUED BY THE NORTH CAROLINA DEPARTMENT OF ENVIRONMENTAL QUALITY DIVISION OF WATER RESOURCES.

Prepared In the Office of:

ROADSIDE ENVIRONMENTAL UNIT
1 South Wilmington St.
Raleigh, NC 27611

2018 STANDARD SPECIFICATIONS

Designed by:

Noelle Ring — *NAME*
3456 — *LEVEL III CERTIFICATION NO.*

Roadway Standard Drawings

The following roadway english standards as appear in "Roadway Standard Drawings"– Roadway Design Unit – N. C. Department of Transportation – Raleigh, N. C., dated January 2018 and the latest revison thereto are applicable to this project and by reference hereby are considered a part of these plans.

1604.01	Railroad Erosion Control Detail	1632.01	Rock Inlet Sediment Trap Type A
1605.01	Temporary Silt Fence	1632.02	Rock Inlet Sediment Trap Type B
1606.01	Special Sediment Control Fence	1632.03	Rock Inlet Sediment Trap Type C
1607.01	Gravel Construction Entrance	1633.01	Temporary Rock Silt Check Type A
1622.01	Temporary Berms and Slope Drains	1633.02	Temporary Rock Silt Check Type B
1630.01	Riser Basin	1634.01	Temporary Rock Sediment Dam Type A
1630.02	Silt Basin Type B	1634.02	Temporary Rock Sediment Dam Type B
1630.03	Temporary Silt Ditch	1635.01	Rock Pipe Inlet Sediment Trap Type A
1630.04	Stilling Basin	1635.02	Rock Pipe Inlet Sediment Trap Type B
1630.05	Temporary Diversion	1640.01	Coir Fiber Baffle
1630.06	Special Stilling Basin	1645.01	Temporary Stream Crossing
1631.01	Matting Installation		

PROJECT REFERENCE NO.	SHEET NO.
17BP.4.R.66	EC-2
R/W SHEET NO.	
ROADWAY DESIGN ENGINEER	HYDRAULICS ENGINEER

COIR FIBER WATTLE WITH POLYACRYLAMIDE (PAM) DETAIL

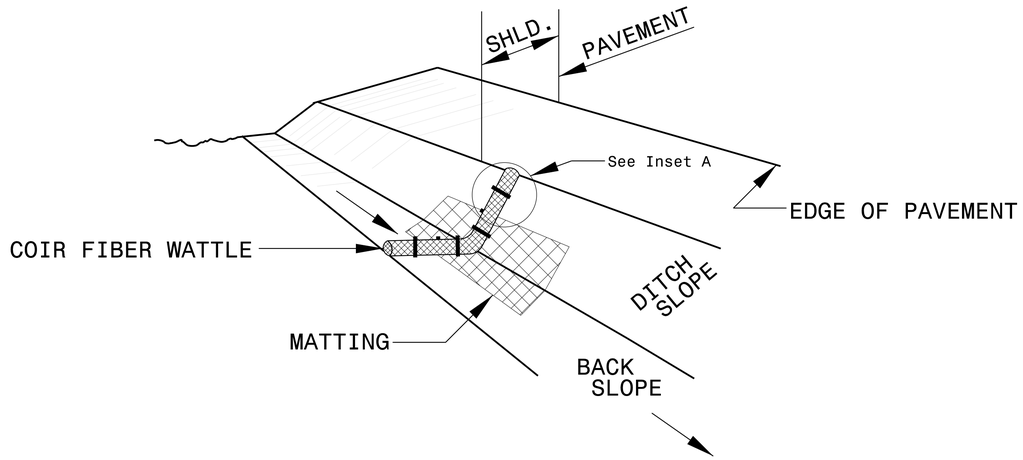

ISOMETRIC VIEW

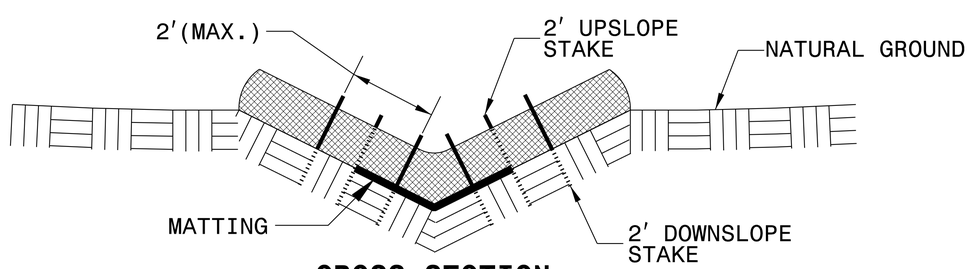

CROSS SECTION VEE DITCH

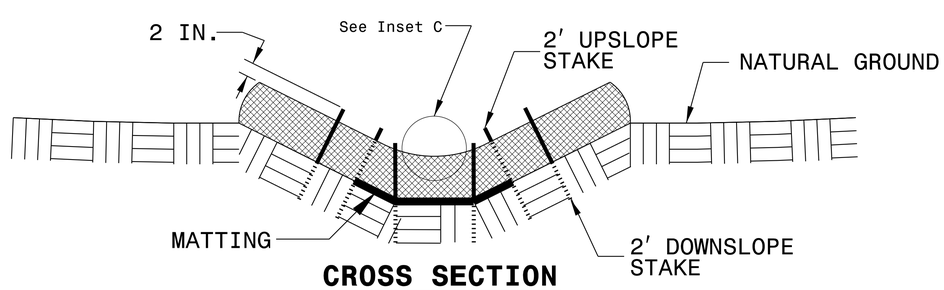

CROSS SECTION TRAPEZOIDAL DITCH

NOTES:

USE MINIMUM 12 IN. DIAMETER COIR FIBER (COCONUT FIBER) WATTLE.

USE 2 FT. WOODEN STAKES WITH A 2 IN. BY 2 IN. NOMINAL CROSS SECTION.

ONLY INSTALL WATTLE(S) TO A HEIGHT IN DITCH SO FLOW WILL NOT WASH AROUND WATTLE AND SCOUR DITCH SLOPES AND AS DIRECTED.

INSTALL A MINIMUM OF 2 UPSLOPE STAKES AND 4 DOWNSLOPE STAKES AT AN ANGLE TO WEDGE WATTLE TO BOTTOM OF DITCH.

PROVIDE STAPLES MADE OF 0.125 IN. DIAMETER STEEL WIRE FORMED INTO A U SHAPE NOT LESS THAN 12″ IN LENGTH.

INSTALL STAPLES APPROXIMATELY EVERY 1 LINEAR FOOT ON BOTH SIDES OF WATTLE AND AT EACH END TO SECURE IT TO THE SOIL.

INSTALL MATTING IN ACCORDANCE WITH SECTION 1631 OF THE STANDARD SPECIFICATIONS.

PRIOR TO POLYACRYLAMIDE (PAM) APPLICATION, OBTAIN A SOIL SAMPLE FROM PROJECT LOCATION, AND FROM OFFSITE MATERIAL, AND ANALYZE FOR APPROPRIATE PAM FLOCCULANT TO BE APPLIED TO EACH WATTLE.

INITIALLY APPLY 2 OUNCES OF ANIONIC OR NEUTRALLY CHARGED PAM OVER WATTLE WHERE WATER WILL FLOW AND 1 OUNCE OF PAM ON MATTING ON EACH SIDE OF WATTLE. REAPPLY PAM AFTER EVERY RAINFALL EVENT THAT IS EQUAL TO OR EXCEEDS 0.50 IN.

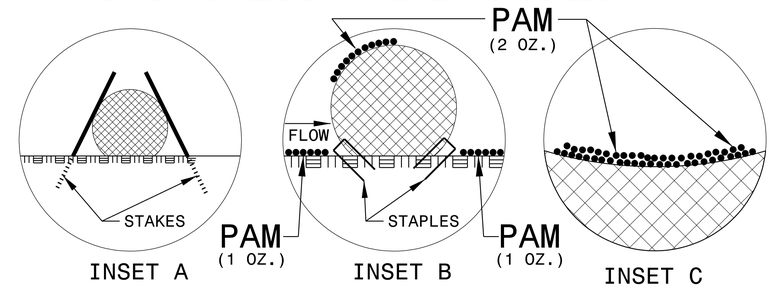

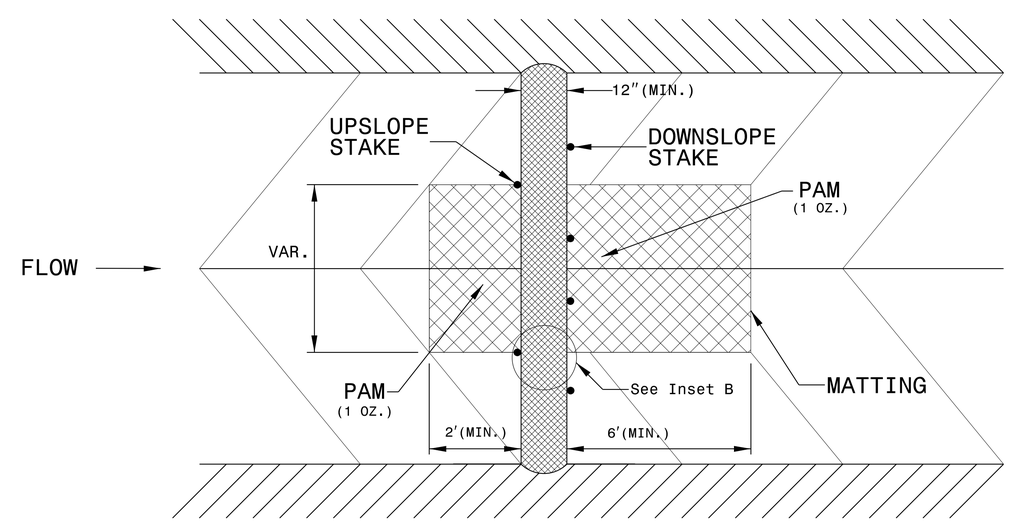

TOP VIEW

PROJECT REFERENCE NO.	SHEET NO.
17BP.4.R.66	EC-2A
R/W SHEET NO.	
ROADWAY DESIGN ENGINEER	HYDRAULICS ENGINEER

COIR FIBER WATTLE BARRIER DETAIL

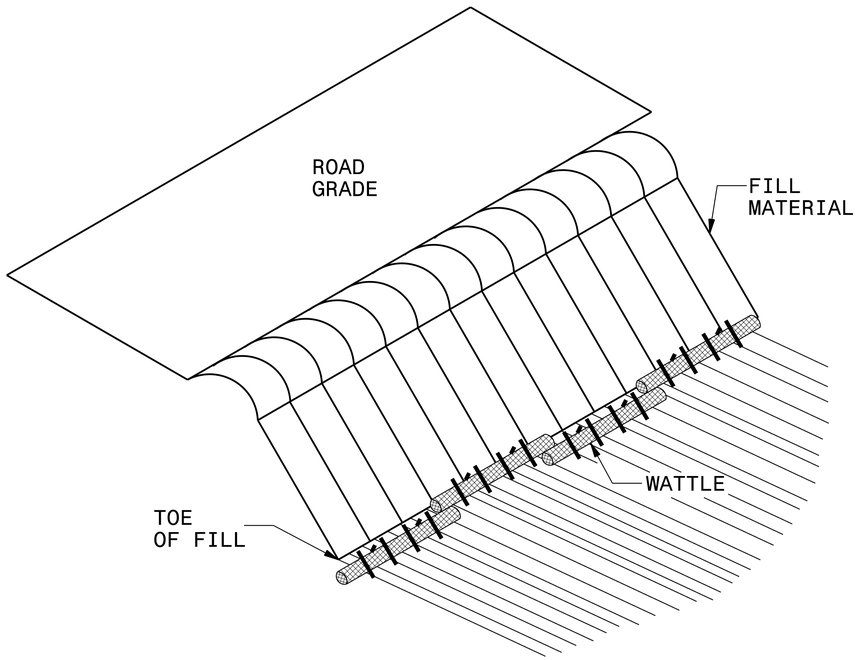

ISOMETRIC VIEW

NOTES:

USE MINIMUM 18 IN. NOMINAL DIAMETER COIR FIBER (COCONUT) WATTLE AND LENGTH OF 10 FT.

EXCAVATE A 2 TO 3 INCH TRENCH FOR WATTLE TO BE PLACED.

DO NOT PLACE WATTLES ON TOE OF SLOPE.

USE 2 FT. WOODEN STAKES WITH A 2 IN. BY 2 IN. NOMINAL CROSS SECTION.

INSTALL A MINIMUM OF 2 UPSLOPE STAKES AND 4 DOWNSLOPE STAKES AT AN ANGLE TO WEDGE WATTLE TO GROUND.

PROVIDE STAPLES MADE OF 0.125 IN. DIAMETER STEEL WIRE FORMED INTO A U SHAPE NOT LESS THAN 12″ IN LENGTH.

INSTALL STAPLES APPROXIMATELY EVERY 1 LINEAR FOOT ON BOTH SIDES OF WATTLE AND AT EACH END TO SECURE IT TO THE SOIL.

FOR BREAKS ALONG LARGE SLOPES, USE MAXIMUM SPACING OF 25 FT.

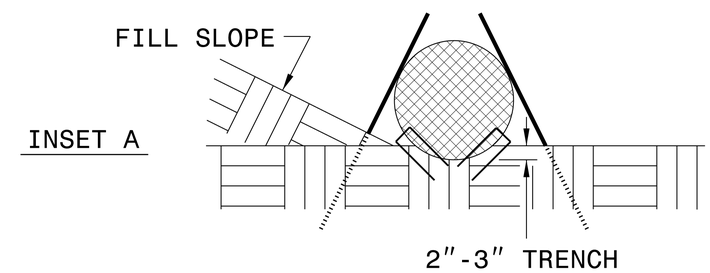

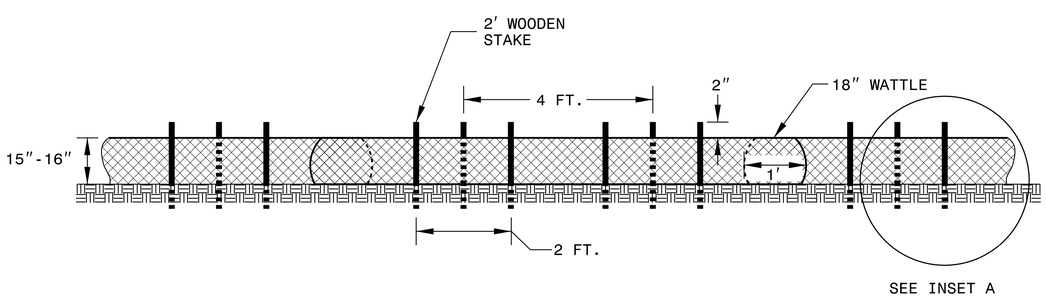

FRONT VIEW

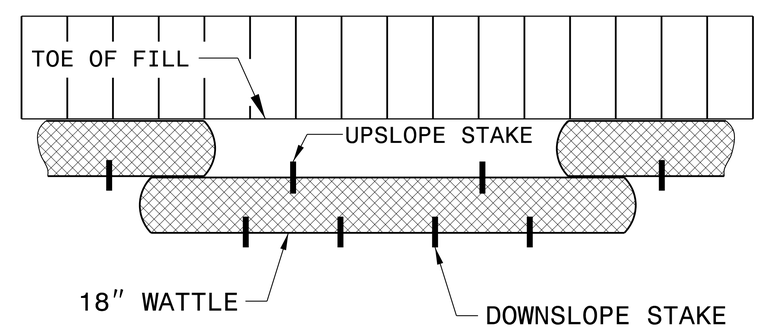

TOP VIEW

PROJECT REFERENCE NO.	SHEET NO.
17BP.4.R.66	EC-3
ROADWAY DESIGN ENGINEER	HYDRAULICS ENGINEER

DIVISION OF HIGHWAYS
STATE OF NORTH CAROLINA

SOIL STABILIZATION TIMEFRAMES

SITE DESCRIPTION	STABILIZATION TIME	TIMEFRAME EXCEPTIONS
PERIMETER DIKES, SWALES, DITCHES AND SLOPES	7 DAYS	NONE
HIGH QUALITY WATER (HQW) ZONES	7 DAYS	NONE
SLOPES STEEPER THAN 3:1	7 DAYS	IF SLOPES ARE 10' OR LESS IN LENGTH AND ARE NOT STEEPER THAN 2:1, 14 DAYS ARE ALLOWED.
SLOPES 3:1 OR FLATTER	14 DAYS	7 DAYS FOR SLOPES GREATER THAN 50' IN LENGTH.
ALL OTHER AREAS WITH SLOPES FLATTER THAN 4:1	14 DAYS	NONE, EXCEPT FOR PERIMETERS AND HQW ZONES.

PROJECT REFERENCE NO.	SHEET NO.
17BP.4.R.66	EC-4/CONST.4
R/W SHEET NO.	
ROADWAY DESIGN ENGINEER	HYDRAULICS ENGINEER

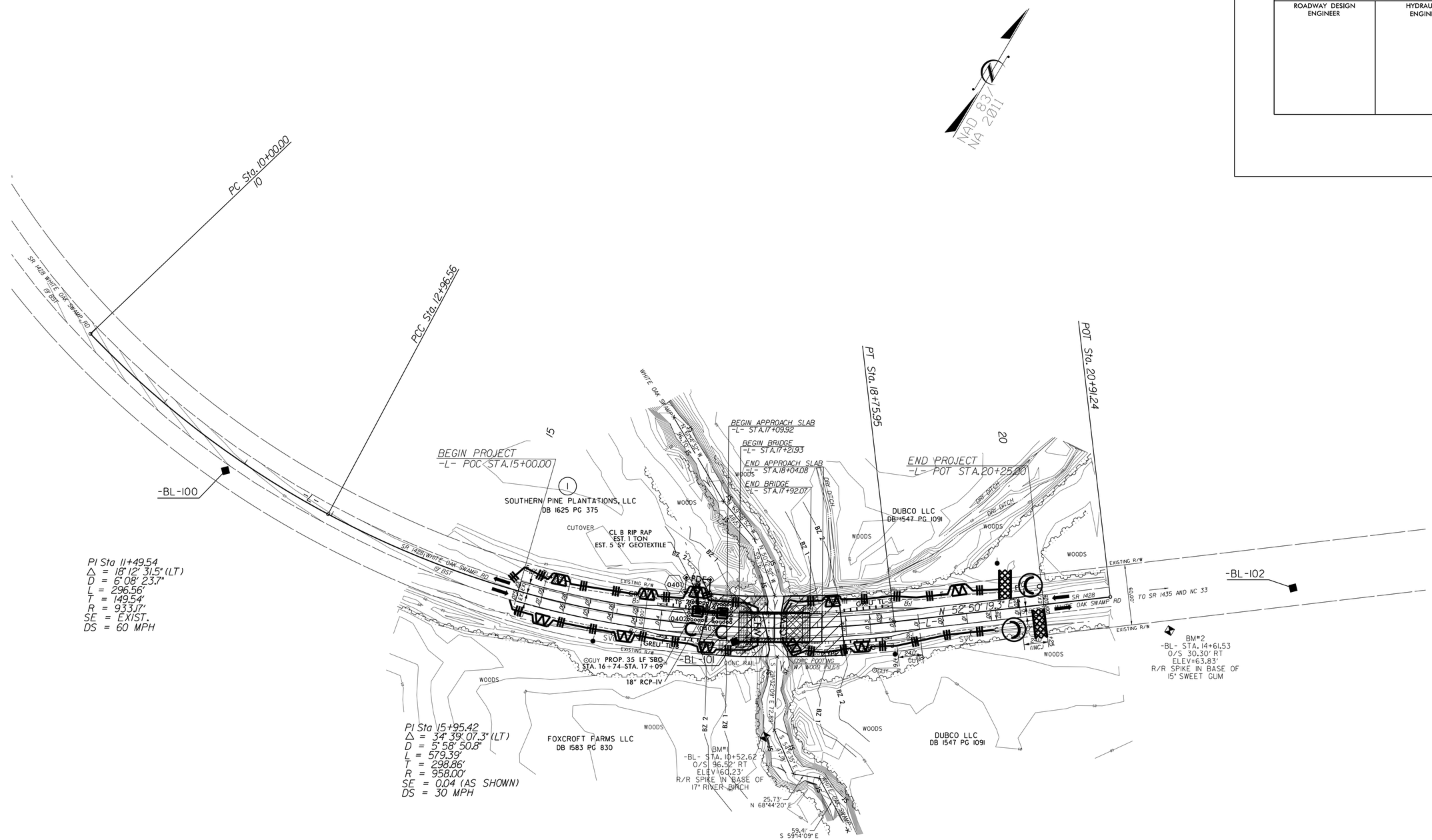

NOTE:
PLACE TEMPORARY ROCK SEDIMENT DAMS TYPE – B AND TEMPORARY ROCK SILT CHECKS TYPE – A AT DRAINAGE OUTLETS.

ENVIRONMENTALLY SENSITIVE AREA
SEE PROJECT SPECIAL PROVISIONS

NOTE:
UTILIZE SPECIAL STILLING BASIN(S) WHERE APPLICABLE

8/17/99

3/22/2018
R:\Structures\from Roadside Env\Edgecombe .45\Sent to Wes Allen\Sent to Wes Allen\Edgecombe 45_EC_PSH04.dgn
7:04:46 AM

PROJECT REFERENCE NO.	SHEET NO.
17BP.4.R.66	RF-1
R/W SHEET NO.	
ROADWAY DESIGN ENGINEER	HYDRAULICS ENGINEER

PLANTING DETAILS

SEEDLING / LINER BAREROOT PLANTING DETAIL

HEALING IN

1. Locate a healing-in site in a shady, well protected area.
2. Excavate a flat bottom trench 12 inches deep and provide drainage.

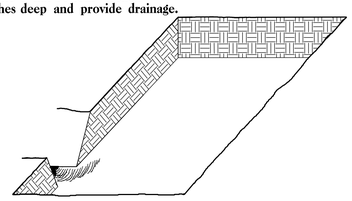

3. Backfill the trench with 2 inches well rotted sawdust. Place a 2 inch layer of well rotted sawdust at a sloping angle at one end of the trench.

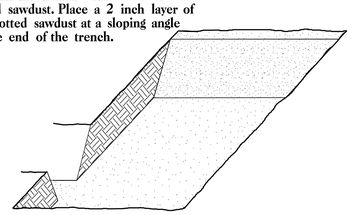

4. Place a single layer of plants against the sloping end so that the root collar is at ground level.

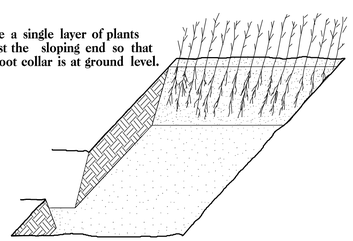

5. Place a 2 inch layer of well rotted sawdust over the roots maintaining a sloping angle.

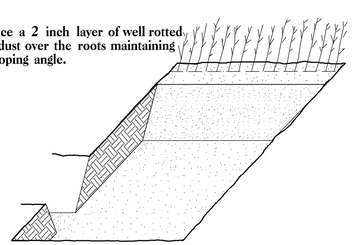

6. Repeat layers of plants and sawdust as necessary and water thoroughly.

DIBBLE PLANTING METHOD
USING THE KBC PLANTING BAR

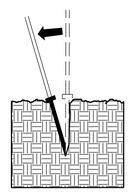

1. Insert planting bar as shown and pull handle toward planter.

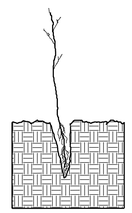

2. Remove planting bar and place seedling at correct depth.

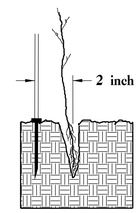

3. Insert planting bar 2 inches toward planter from seedling.

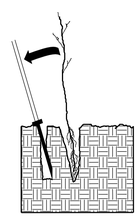

4. Pull handle of bar toward planter, firming soil at bottom.

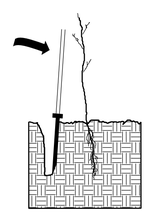

5. Push handle forward firming soil at top.

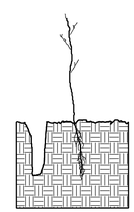

6. Leave compaction hole open. Water thoroughly.

PLANTING NOTES:

PLANTING BAG
During planting, seedlings shall be kept in a moist canvas bag or similar container to prevent the root systems from drying.

KBC PLANTING BAR
Planting bar shall have a blade with a triangular cross section, and shall be 12 inches long, 4 inches wide and 1 inch thick at center.

ROOT PRUNING
All seedlings shall be root pruned, if necessary, so that no roots extend more than 10 inches below the root collar.

REFORESTATION

☐ TREE REFORESTATION SHALL BE PLANTED 6 FT. TO 10 FT. ON CENTER, RANDOM SPACING, AVERAGING 8 FT. ON CENTER, APPROXIMATELY 680 PLANTS PER ACRE.

REFORESTATION

MIXTURE, TYPE, SIZE, AND FURNISH SHALL CONFORM TO THE FOLLOWING:

34% PLATANUS OCCIDENTALIS	AMERICAN SYCAMORE	12 in - 18 in BR
33% LIRIODENDRON TULIPIFERA	YELLOW POPLAR	12 in - 18 in BR
33% FRAXINUS PENNSYLVANICA	GREEN ASH	12 in - 18 in BR

REFORESTATION DETAIL SHEET

N.C.D.O.T. - ROADSIDE ENVIRONMENTAL UNIT

09/08/99

TIP PROJECT: 17BP.4.R.66

CONTRACT: DD00239

T.I.P. NO.	SHEET NO.
17BP.4.R.66	UC–1

STATE OF NORTH CAROLINA
DIVISION OF HIGHWAYS

UTILITY CONSTRUCTION PLANS
EDGECOMBE COUNTY

LOCATION: BRIDGE 45 OVER WHITE OAK SWAMP ON SR 1428 (WHITE OAK SWAMP ROAD.)

TYPE OF WORK: WATERLINE CONSTRUCTION / RELOCATION

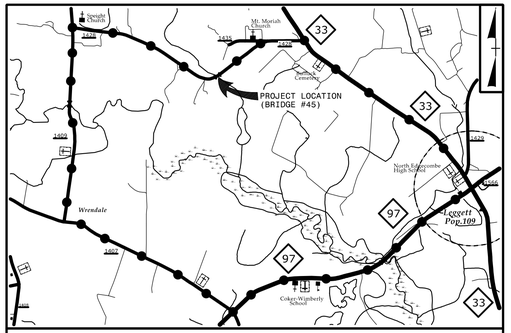

VICINITY MAP
(NOT TO SCALE)
DETOUR ROUTE (APPROXIMATE LENGTH = 8 MILES)

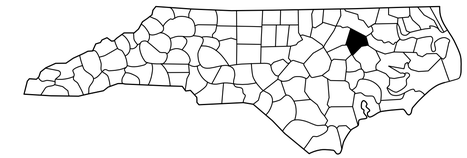

NAD 83/NA 2011

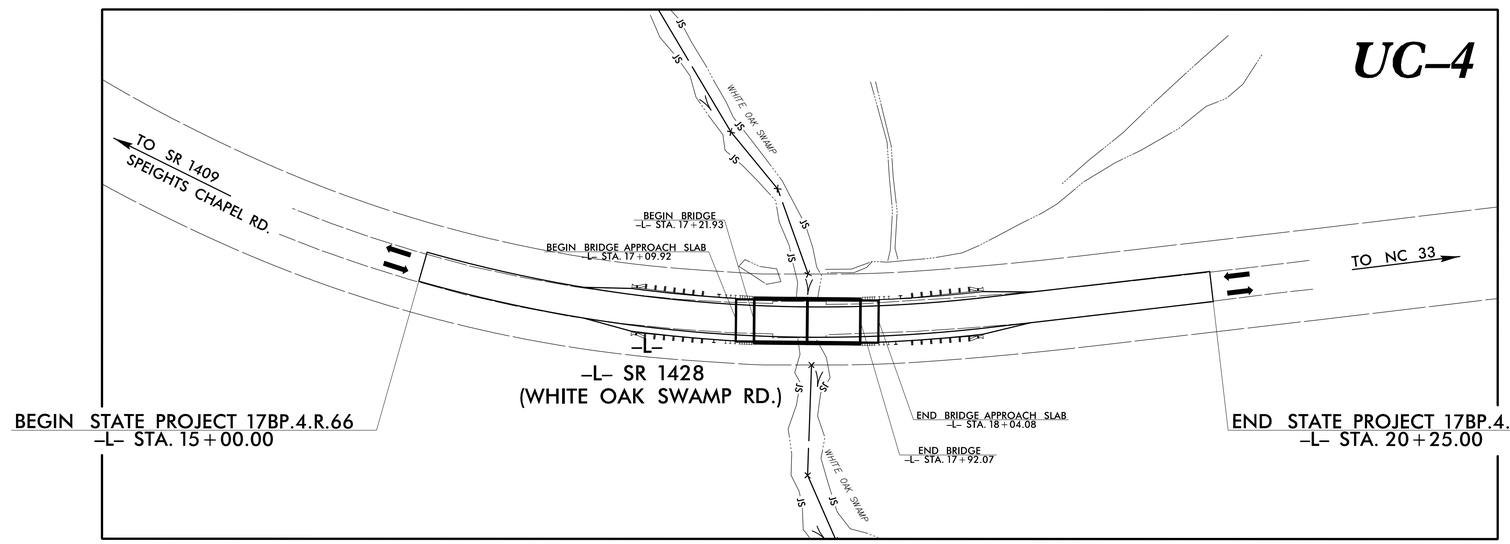

PRELIMINARY PLANS
DO NOT USE FOR CONSTRUCTION

DOCUMENT NOT CONSIDERED FINAL UNTIL ALL SIGNATURES ARE COMPLETED

GRAPHIC SCALES

20 10 0 20 40
PLANS

20 10 0 20 40
PROFILE (HORIZONTAL)

4 2 0 4 8
PROFILE (VERTICAL)

INDEX OF SHEETS

SHEET NO.:	DESCRIPTION:
UC–1	TITLE SHEET
UC–2	UTILITY SYMBOLOGY
UC–3	NOTES
UC–3A THRU UC–3B	DETAILS
UC–4	UTILITY CONSTRUCTION SHEET
UC–4	PROFILE SHEET

WATER AND SEWER OWNERS ON PROJECT

(A) WATER	EDGECOMBE COUNTY
(B) TELEPHONE	CENTURY LINK
(C) POWER	EDGECOMBE–MARTIN EMC

PREPARED IN THE OFFICE OF

CALYX
ENGINEERS + CONSULTANTS
6750 TRYON ROAD
CARY, NC 27518
phone: 919.851.1912
CALYXengineers.com
NC License # F-1333

MICHAEL D. ALLEN P.E. — CONSULTANT CONTACT #1
L. KEVIN AUSTIN, P.E. — CONSULTANT CONTACT #2

SEAL

NORTH CAROLINA PROFESSIONAL SEAL 22514 ENGINEER MICHAEL D. ALLEN
Docusigned by: Michael D. Allen
4/24/2018

DIVISION OF HIGHWAYS
UTILITIES UNIT
1555 MAIL SERVICES CENTER
RALEIGH NC 27699–1555
PHONE (919) 707–6690
FAX (919) 250–4151

Nabil Hamdan	UTILITIES REGIONAL ENGINEER
Kelvin Martin	UTILITIES ENGINEER
Kyle Pleasant	UTILITIES AREA COORDINATOR
C. Dayton Martin, III	UTILITIES COORDINATOR

3/21/2018
G:\Project\2013\2013058.10\CLIENT\Utilities\UC-1.dgn
11:25:57 AM

5/14/99

PROJECT REFERENCE NO.	SHEET NO.
17BP.4.R.66	UC-2

STATE OF NORTH CAROLINA
DIVISION OF HIGHWAYS

UTILITIES PLAN SHEET SYMBOLS

PROPOSED WATER SYMBOLS

- Water Line (Sized as Shown) — 12" WL
- 11¼ Degree Bend
- 22½ Degree Bend
- 45 Degree Bend
- 90 Degree Bend
- Plug
- Tee
- Cross
- Reducer
- Gate Valve — GV
- Butterfly Valve — BV
- Tapping Valve — TGV
- Line Stop — LS
- Line Stop with Bypass — LS/BP
- Blow Off — BO
- Fire Hydrant — PFH
- Relocate Fire Hydrant — RFH
- Remove Fire Hydrant — REM FH
- Water Meter — PWM
- Relocate Water Meter — RWM
- Remove Water Meter — REM WM
- Water Pump Station — PS(W)
- RPZ Backflow Preventer — PRPZ
- DCV Backflow Preventer — PBFP
- Relocate RPZ Backflow Preventer — RRPZ
- Relocate DCV Backflow Preventer — RBFP

PROPOSED SEWER SYMBOLS

- Gravity Sewer Line (Sized as Shown) — 12" SS
- Force Main Sewer Line (Sized as Shown) — 12" FSS
- Manhole (Sized per Note)
- Sewer Pump Station — PS(SS)

PROPOSED MISCELLANOUS UTILITIES SYMBOLS

- Power Pole
- Telephone Pole
- Joint Use Pole
- Telephone Pedestal — TEL PED
- Utility Line by Others (Type as Shown) — PROP O/H POW LINES
- Trenchless Installation — 12" TL INSTALL
- Encasement by Open Cut — 24" ENCAS BY OC
- Encasement — 24" ENCASEMENT
- Thrust Block
- Air Release Valve — AR
- Utility Vault — UV
- Concrete Pier — CP
- Steel Pier — SP
- Plan Note — NOTE
- Pay Item Note — PAY ITEM

EXISTING UTILITIES SYMBOLS

- Power Pole
- Telephone Pole
- Joint Use Pole
- Utility Pole
- Utility Pole with Base
- H-Frame Pole
- Power Transmission Line Tower
- Water Manhole
- Power Manhole
- Telephone Manhole
- Sanitary Sewer Manhole
- Hand Hole for Cable — HH
- Power Transformer
- Telephone Pedestal — T
- CATV Pedestal — C
- Gas Valve
- Gas Meter
- Located Miscellaneous Utility Object
- Abandoned According to Utility Records — AATUR
- End of Information — E.O.I.
- *Underground Power Line
- *Underground Telephone Cable
- *Underground Telephone Conduit
- *Underground Fiber Optics Telephone Cable
- *Underground TV Cable
- *Underground Fiber Optics TV Cable
- *Underground Gas Pipeline
- Aboveground Gas Pipeline — A/G Gas
- *Underground Water Line
- Aboveground Water Line — A/G Water
- *Underground Gravity Sanitary Sewer Line — SS
- Aboveground Gravity Sanitary Sewer Line — A/G Sanitary Sewer
- *Underground SS Forced Main Line
- Underground Unknown Utility Line
- SUE Test Hole
- Water Meter
- Water Valve
- Fire Hydrant
- Sanitary Sewer Cleanout

*For Existing Utilities

- Utility Line Drawn from Record (Type as Shown)
- Designated Utility Line (Type as Shown)

REV: 2/1/2012

3/21/2018
10:25:36 AM
R:\Project\2018\B058.10\CLIENT\Utilities\UC-2.dgn

5/14/99

PROJECT REFERENCE NO.	SHEET NO.
17BP.4.R.66	UC-3
DESIGNED BY: MDA	
DRAWN BY: DFB	
CHECKED BY: PCP	
APPROVED BY: MDA	
REVISED:	
NORTH CAROLINA DEPARTMENT OF TRANSPORTATION	
UTILITIES ENGINEERING SEC. PHONE:(919)707-6690 FAX:(919)250-4151	UTILITY CONSTRUCTION PLANS ONLY

NORTH CAROLINA PROFESSIONAL ENGINEER SEAL 22514 MICHAEL D. ALLEN
DocuSigned by: Michael D. Allen
03/29/2018

UTILITY CONSTRUCTION

UTILITY CONSTRUCTION

GENERAL NOTES:

1. THE PROPOSED UTILITY CONSTRUCTION SHALL MEET THE APPLICABLE REQUIREMENTS OF THE NC DEPARTMENT OF TRANSPORTATION'S "STANDARD SPECIFICATIONS FOR ROADS AND STRUCTURES" DATED JANUARY 2012.

2. THE EXISTING UTILITIES BELONG TO
   WATER - EDGECOMBE COUNTY
   TELEPHONE - CENTURY LINK
   POWER - EDGECOMBE MARTIN EMC

3. ALL WATER LINES TO BE INSTALLED WITHIN COMPLIANCE OF THE RULES AND REGULATIONS OF THE NORTH CAROLINA DEPARTMENT OF ENVIRONMENTAL QUALITY, DIVISION OF WATER RESOURCES, PUBLIC WATER SUPPLY SECTION AND EDGECOMBE COUNTY..

4. THE UTILITY OWNER OWNS THE EXISTING UTILITY FACILITIES AND WILL OWN THE NEW UTILITY FACILITIES AFTER ACCEPTANCE BY THE DEPARTMENT. THE DEPARTMENT OWNS THE CONSTRUCTION CONTRACT AND HAS ADMINISTRATIVE AUTHORITY. COMMUNICATIONS AND DECISIONS BETWEEN THE CONTRACTOR AND UTILITY OWNER ARE NOT BINDING UPON THE DEPARTMENT OR THIS CONTRACT UNLESS AUTHORIZED BY THE ENGINEER. AGREEMENTS BETWEEN THE UTILITY OWNER AND CONTRACTOR FOR THE WORK THAT IS NOT PART OF THIS CONTRACT OR IS SECONDARY TO THIS CONTRACT ARE ALLOWED, BUT ARE NOT BINDING UPON THE DEPARTMENT.

5. PROVIDE ACCESS FOR THE DEPARTMENT PERSONNEL AND THE OWNER'S REPRESENTATIVES TO ALL PHASES OF CONSTRUCTION. NOTIFY DEPARTMENT PERSONNEL AND THE UTILITY OWNER TWO WEEKS PRIOR TO COMMENCEMENT OF ANY WORK AND ONE WEEK PRIOR TO SERVICE INTERRUPTION. KEEP UTILITY OWNERS' REPRESENTATIVES INFORMED OF WORK PROGRESS AND PROVIDE OPPORTUNITY FOR INSPECTION OF CONSTRUCTION AND TESTING.

6. THE PLANS DEPICT THE BEST AVAILABLE INFORMATION FOR THE LOCATION, SIZE, AND TYPE OF MATERIAL FOR ALL EXISTING UTILITIES. MAKE INVESTIGATIONS FOR DETERMINING THE EXACT LOCATION, SIZE, AND TYPE MATERIAL OF THE EXISTING FACILITIES AS NECESSARY FOR THE CONSTRUCTION OF THE PROPOSED UTILITIES AND FOR AVOIDING DAMAGE TO EXISTING FACILITIES. REPAIR ANY DAMAGE INCURRED TO EXISTING FACILITIES TO THE ORIGINAL OR BETTER CONDITION AT NO ADDITIONAL COST TO THE DEPARTMENT.

7. MAKE FINAL CONNECTIONS OF THE NEW WORK TO THE EXISTING SYSTEM WHERE INDICATED ON THE PLANS, AS REQUIRED TO FIT THE ACTUAL CONDITIONS, OR AS DIRECTED.

8. MAKE CONNECTIONS BETWEEN EXISTING AND PROPOSED UTILITIES AT TIMES MOST CONVENIENT TO THE PUBLIC, WITHOUT ENDANGERING THE UTILITY SERVICE, AND IN ACCORDANCE WITH THE UTILITY OWNER'S REQUIREMENTS. MAKE CONNECTIONS ON WEEKENDS, AT NIGHT, AND ON HOLIDAYS IF NECESSARY.

9. ALL UTILITY MATERIALS SHALL BE APPROVED PRIOR TO DELIVERY TO THE PROJECT. SEE 1500-7, " SUBMITTALS AND RECORDS" IN SECTION 1500 OF THE STANDARD SPECIFICATIONS.

PROJECT SPECIFIC NOTES:

1. CONTRACTOR'S ATTENTION IS DIRECTED TO SECTIONS 102, 107, AND 1550 OF THE STANDARD SPECIFICATIONS CONCERNING TRENCHLESS INSTALLATION. IT IS CONTRACTOR'S RESPONSIBILITY TO HAVE BORE DESIGNED AND SEALED BY A LICENSED NORTH CAROLINA PROFESSIONAL ENGINEER. NO DAMAGE IS ALLOWED TO RIVER, WETLANDS, OR BUFFER ZONES.

2. IF HDPE PIPE IS INSTALLED BY DIRECTIONAL DRILL. IT SHALL BE FILLED WITH WATER AND NOT BE CONNECTED TO ANY OTHER PIPE OR FITTINGS FOR ONE WEEK FROM THE TIME OF INSTALLATION.

LIST OF STANDARD DRAWINGS

SEE SHEET UC-3A & UC-3B

3/29/2018
3:19:19 PM
I:\Projects\2013\203058.10\CLIENT\Utilities\UC-3.dgn

5/14/99

PROJECT REFERENCE NO.	SHEET NO.
17BP.4.R.66	UC-3A
DESIGNED BY: MDA	
DRAWN BY: DFB	
CHECKED BY: PCP	
APPROVED BY: MDA	
REVISED:	
NORTH CAROLINA DEPARTMENT OF TRANSPORTATION	
UTILITIES ENGINEERING SEC. PHONE:(919)707-6690 FAX:(919)250-4151	UTILITY CONSTRUCTION PLANS ONLY

NORTH CAROLINA PROFESSIONAL ENGINEER SEAL 22514 MICHAEL D. ALLEN

DocuSigned by: Michael D. Allen 0D5B0847ED4B4C0... 11/27/2017 4:24:20 PM EST

UTILITY CONSTRUCTION

PROJECT TYPICAL DETAILS

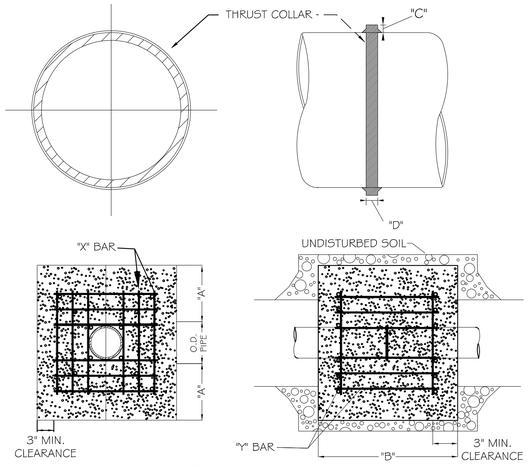

REINFORCING REQUIREMENTS

I.D. PIPE	REBAR SIZE	"X" BAR LENGTH	"X" BAR WEIGHT	"Y" BAR LENGTH	"Y" BAR WEIGHT	NO. REQUIRED
6" - 36"	#5	2'-2"+ O.D. PIPE	1.043 LBS/FT	1'-1"	1.1 LBS. EACH	X-24, Y-12
48" & greater	#6	3'-0"+ O.D. PIPE	1.502 LBS/FT	1'-3"	1.9 LBS. EACH	X-24, Y-12

THRUST COLLAR, AND THRUST SCHEDULE

I.D. PIPE	"A"	"B"	"C"	"D"
6" - 16"	1'-4"	1'-7"	2"	3/8"
20" - 24"	1'-4"	1'-7"	3"	1/2"
30" - 36"	1'-4"	1'-7"	4"	5/8"
48" & greater	1'-8"	1'-9"	6"	7/8"

NOTES:
1. SEE STANDARD DETAIL W-9 FOR THRUST BLOCK LOCATIONS.
2. CONCRETE SHALL BE 3000 PSI AND TRANSIT MIXED.
3. REINFORCING BARS SHALL BE DEFORMED AND TIED TOGETHER.
4. TRENCH BOTTOM WIDTH IN VICINITY OF THRUST BLOCK INSTALLATION SHALL BE THE MINIMUM WIDTH AS SHOWN ON STANDARD DETAIL W-3.
5. BACKFILL TAMPED IN 6" LIFTS PER STANDARD DETAIL W-3.
6. THRUST COLLAR MUST BE FACTORY WELDED ON BOTH SIDES ALONG BOTH EDGES OF COLLAR AROUND CIRCUMFERENCE.

THRUST BLOCKING DESIGN DATA FOR WATER MAINS

REACTION BEARING AREAS FOR HORIZONTAL WATER PIPE BENDS
BASED ON TEST PRESSURE OF 200 P.S.I.

ALL AREAS GIVEN IN SQUARE FEET.

SIZE AND DEGREE OF BEND	STATIC THRUST IN POUNDS	MODERATELY DRY CLAY 4000 LBS/FT²	SOFT CLAY 2000 LBS/FT²	1600 LBS/FT² GRAVEL/ COARSE SAND	8000 LBS/FT² DRY CLAY ALWAYS DRY	SAND COMPACT FIRM 8000 LBS/FT²	SAND CLEAN DRY 4000 LBS/FT²	SOIL 1000 LBS/FT² QUICKSAND - VERY POOR	ROCK - POOR 10,000 LBS/FT²
12"									
11 1/4°	4,433	2	3	3	1	1	2	5	1
22 1/2°	8,826	3	5	6	2	2	3	9	1
45°	17,312	5	9	11	3	3	5	18	2
90°	31,983	8	16	19	4	4	8	32	4
PLUG	22,619	6	12	14	3	3	6	23	3

REACTION BEARING AREAS ARE IN SQUARE FEET MEASURED IN A VERTICAL PLANE IN THE TRENCH SIDE AT AN ANGLE OF 90° TO THE THRUST VECTOR.

THRUST BLOCKING DESIGN QUANTITY TABLE

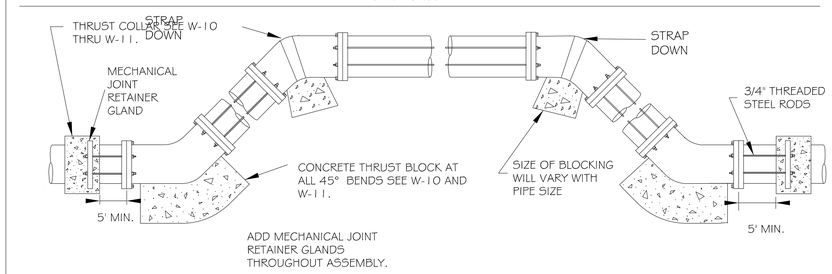

ADD MECHANICAL JOINT RETAINER GLANDS THROUGHOUT ASSEMBLY.

ROD REQUIREMENTS

SIZE OF 45 BEND	STATIC THRUST IN POUNDS	NO. OF RODS REQUIRED
6"	4,328	2
8"	7,694	4
12"	17,312	4
16"	30,779	8
24"	69,252	8

GENERAL NOTES:
1. STEEL RODS AND BOLTS SHALL BE 3/4" HOT DIPPED GALVANIZED.
2. CONCRETE SHALL NOT CONTACT BOLTS OR ENDS OF MECHANICAL JOINT BENDS.
3. RESTRAINED MECHANICAL GLANDS TO BE USED AT ALL FITTINGS.
4. MUST USE DUCTILE IRON EYE BOLTS WHERE NECESSARY.
5. 3' MINIMUM COVER MUST BE MAINTAINED ON ALL WATER MAINS

STANDARD VERTICAL BEND

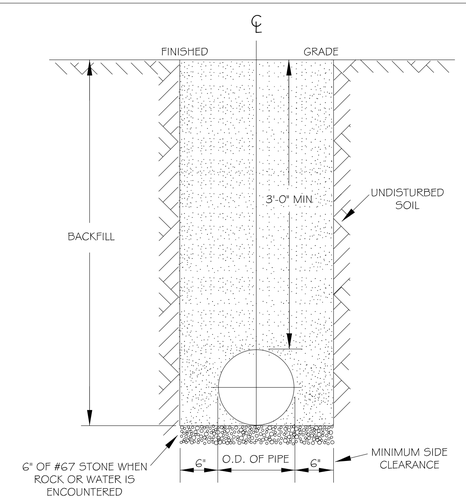

NOTES:
1. TRENCHES REQUIRING SHORING AND BRACING, DIMENSIONS SHALL BE TAKEN FROM THE INSIDE FACE OF THE SHORING AND BRACING.
2. NO ROCKS OR BOULDERS 4" OR LARGER TO BE USED IN BACKFILL.
3. ALL BACKFILL MATERIAL SHALL BE SUITABLE NATIVE MATERIAL.
4. BACKFILL SHALL BE TAMPED IN 6" LIFTS.
5. ACHIEVE 95% COMPACTION IN BACKFILL.

TRENCH BOTTOM DIMENSIONS & BACKFILLING REQUIREMENTS FOR DUCTILE IRON

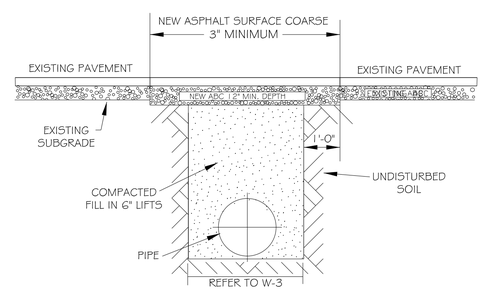

NOTES:
1. THE PAVEMENT CUT SHALL BE DEFINED BY A STRAIGHT EDGE AND CUT WITH AN APPROPRIATE SAW CUT MACHINE.
2. THE TRENCH SUBGRADE MATERIAL SHALL BE BACKFILLED WITH SUITABLE MATERIAL AND COMPACTED TO A DENSITY OF AT LEAST 95% OF THAT OBTAINED BY COMPACTING A SAMPLE OF THE MATERIAL IN ACCORDANCE WITH AASHTO T-99 AS MODIFIED BY NCDOT.
3. THE FINAL 1' OF FILL SHALL CONSIST OF ABC MATERIAL COMPACTED TO A DENSITY EQUAL TO 100% OF THAT OBTAINED BY COMPACTING A SAMPLE OF THE MATERIAL IN ACCORDANCE WITH AASHTO T-80 AS MODIFIED BY NCDOT.
4. THE ENTIRE THICKNESS/ VERTICAL EDGE OF CUT SHALL BE TACKED.
5. THE SAME DEPTH OF PAVEMENT MATERIAL WHICH EXISTS SHALL BE REINSTALLED, BUT IN NO CASE SHALL THE ASPHALT BE LESS THAN 3" THICK.
6. THE ASPHALT PAVEMENT MATERIAL SHALL BE INSTALLED AND COMPACTED THOROUGHLY WITH A SMOOTH DRUM ROLLER TO ACHIEVE A SMOOTH LEVEL PATCH.
7. REFER TO CITY OF RALEIGH STANDARDS FOR TRENCHES AND PIPE BEDDING, W-3. FOR ADDITIONAL DETAILS.
8. NO HAND PATCHING ALLOWED.
9. PAVEMENT CUTS WITHIN NCDOT ROW SHALL CONFORM TO THE APPROVED ON SITE ENCROACHMENT PERMIT.

STANDARD ASPHALT PAVEMENT PATCH DETAIL

THRUST BLOCKING

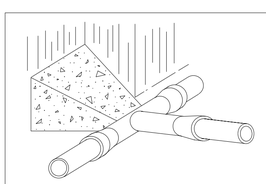

TEE INTERSECTION

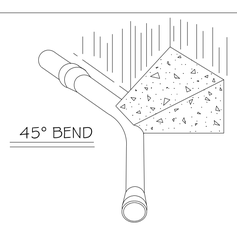

45° BEND

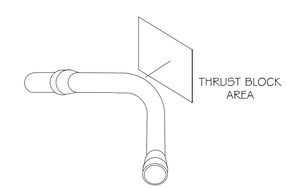

NOTES:
1. CONCRETE SHALL BE 3000 PSI
2. CONCRETE SHALL NOT CONTACT BOLTS OR ENDS OF MECHANICAL JOINT FITTINGS.
3. TRENCHES SHALL CONFORM TO STANDARD DETAIL W-3.
4. SEE STANDARD THRUST BLOCK TABLES, W-10 THRU W-11, FOR AREA OF CONCRETE REQUIRED.
5. ALL BENDS AND INTERSECTIONS SHALL HAVE CONCRETE THRUST BLOCKING.

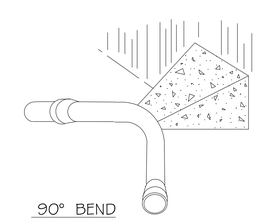

90° BEND

STANDARD THRUST BLOCKING VIEWS

\Project\2018\58.10\CLIENT\Utilities\UC-3A.dgn
3/21/2018 12:12:27 PM

5/14/99

PROJECT REFERENCE NO.	SHEET NO.
17BP.4.R.66	UC-3B
DESIGNED BY: MDA	
DRAWN BY: DFB	
CHECKED BY: PCP	
APPROVED BY: MDA	
REVISED:	
NORTH CAROLINA DEPARTMENT OF TRANSPORTATION	
UTILITIES ENGINEERING SEC. PHONE:(919)707-6690 FAX:(919)250-4151	UTILITY CONSTRUCTION PLANS ONLY

NORTH CAROLINA PROFESSIONAL ENGINEER SEAL 22514 MICHAEL D. ALLEN

DocuSigned by: Michael D. Allen 9/24/2018

UTILITY CONSTRUCTION

PROJECT TYPICAL DETAILS

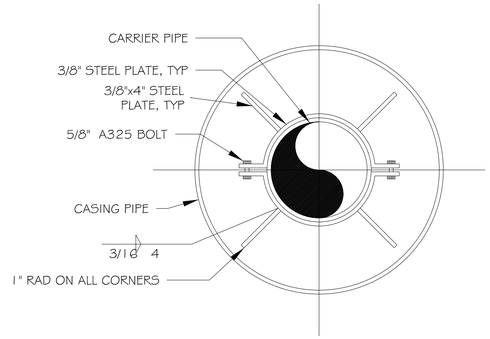

NOTE:

1) USE A MINIMUM OF TWO SPIDERS PER PIPE JOINT ONE FOURTH OF THE PIPE JOINT LENGTH IN FROM BOTH THE BELL AND SPIGOT ENDS.

PIPE ALIGNMENT GUIDE

NOTE: NO ENCASEMENT REQUIRED FOR SPACE GREATER THAN 18" FOR WATER LINES

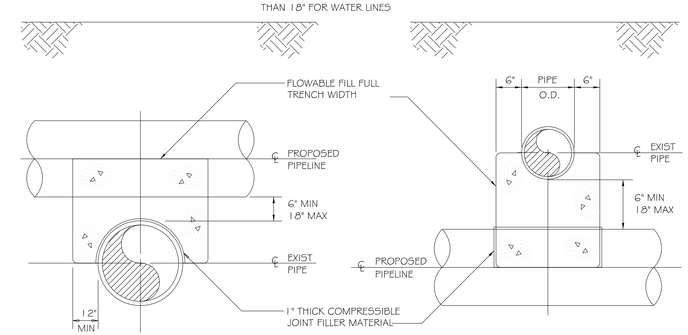

PROPOSED PIPELINE OVER EXISTING PIPE

PROPOSED PIPELINE UNDER EXISTING PIPE

CONCRETE CRADLE PROTECTION FOR WATER LINE CROSSINGS

\Project\2018\68.10\CLIENT\Utilities\UC-3B.dgn
3/21/2018
10:43:31 AM

PROJECT REFERENCE NO.	SHEET NO.
17BP.4.R.66	UC-4
R/W SHEET NO.	

UTILITY DESIGN ENGINEER

NORTH CAROLINA PROFESSIONAL SEAL ENGINEER MICHAEL D. ALLEN 22514 4/24/2018

DOCUMENT NOT CONSIDERED FINAL UNLESS ALL SIGNATURES COMPLETED

NOTE:
THE ESTIMATED QUANTITY OF DUCTILE IRON WATER PIPE FITTINGS ON THIS PLAN SHEET IS 1,850 POUNDS. THE ACTUAL QUANTITY AND TYPE OF FITTINGS WILL VARY BASED ON FIELD CONDITIONS.

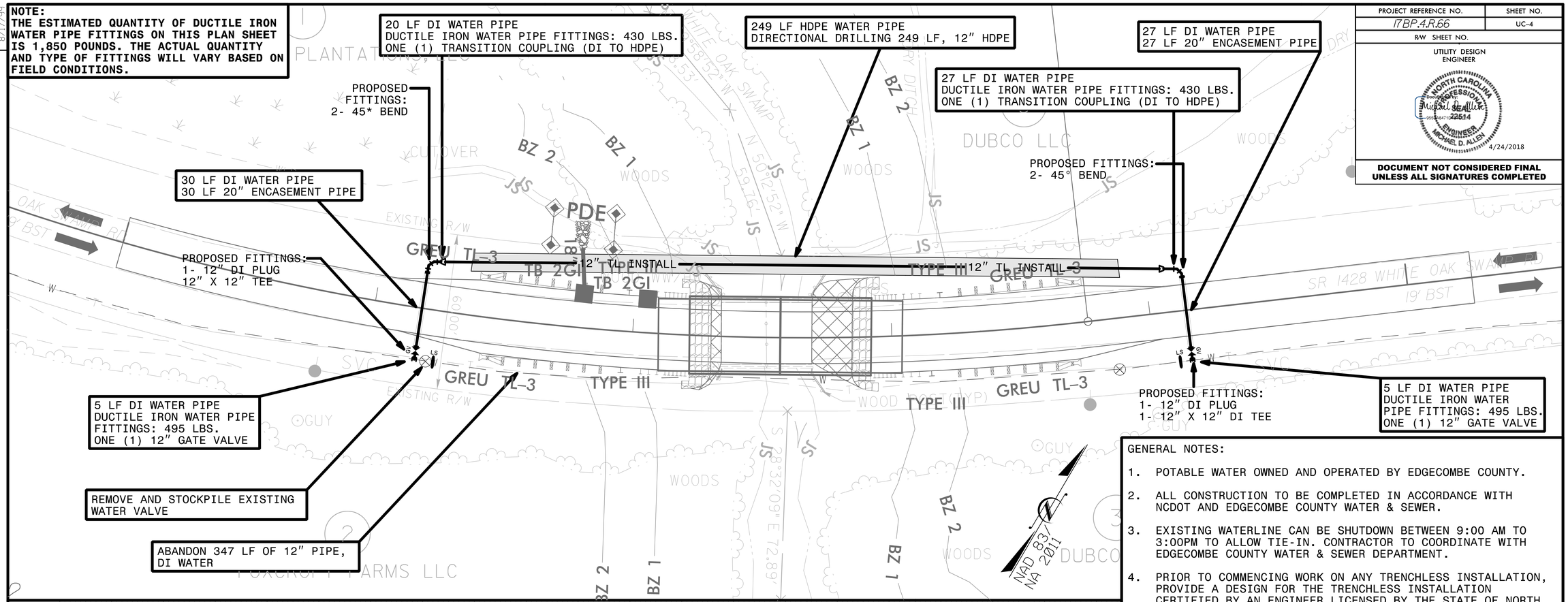

GENERAL NOTES:

1. POTABLE WATER OWNED AND OPERATED BY EDGECOMBE COUNTY.
2. ALL CONSTRUCTION TO BE COMPLETED IN ACCORDANCE WITH NCDOT AND EDGECOMBE COUNTY WATER & SEWER.
3. EXISTING WATERLINE CAN BE SHUTDOWN BETWEEN 9:00 AM TO 3:00PM TO ALLOW TIE-IN. CONTRACTOR TO COORDINATE WITH EDGECOMBE COUNTY WATER & SEWER DEPARTMENT.
4. PRIOR TO COMMENCING WORK ON ANY TRENCHLESS INSTALLATION, PROVIDE A DESIGN FOR THE TRENCHLESS INSTALLATION CERTIFIED BY AN ENGINEER LICENSED BY THE STATE OF NORTH CAROLINA, AS REQUIRED BY SUBARTICLE 1550-3(B) OF THE STANDARD SPECIFICATIONS. CALCULATIONS MUST BE PROVIDED TO ENSURE NO HYDRAULIC FRACTURING OF DRILLING FLUIDREACH THE SURFACE.

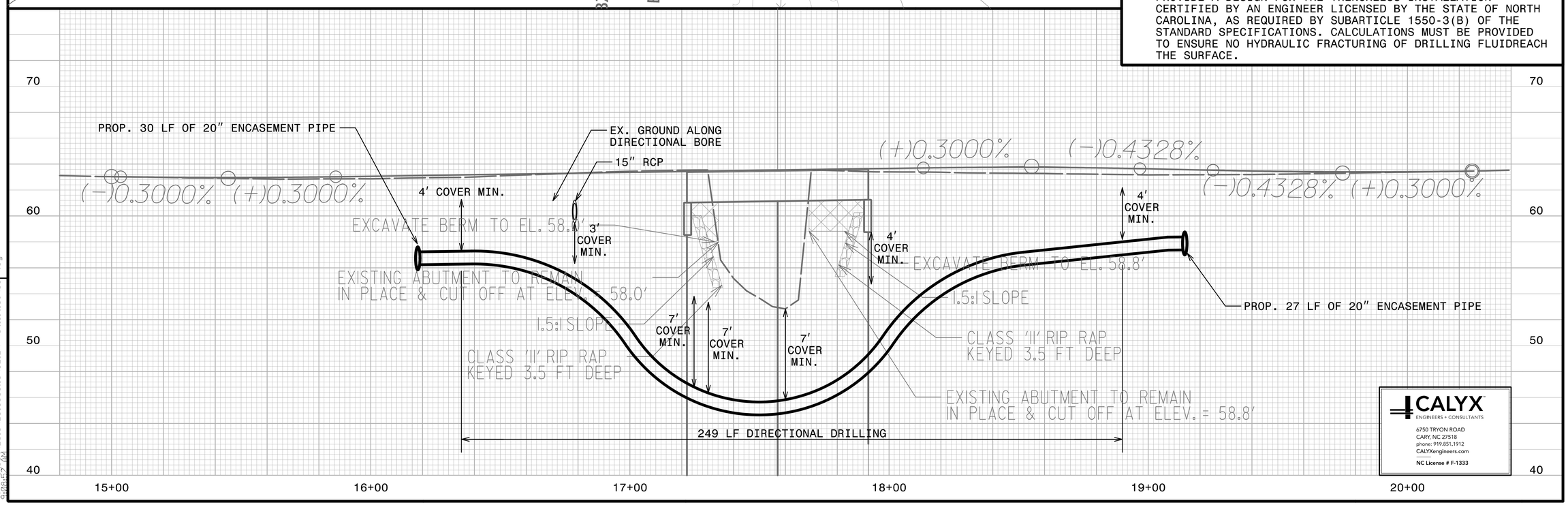

CALYX
ENGINEERS + CONSULTANTS
6750 TRYON ROAD
CARY, NC 27518
phone: 919.851.1912
CALYXengineers.com
NC License # F-1333

REVISIONS

3/22/2018
12:52:29 PM
G:\Projects\2013\2013058.10\CLIENT\Utilities\UC_4.dgn

PROJ. REFERENCE NO.	SHEET NO.
17BP.4.R.66	XS-1A

REPLACEMENT OF BRIDGE 45 OVER WHITE OAK SWAMP ON SR 1428 (WHITE OAK SWAMP RD.)

EDGECOMBE COUNTY

PROJECT 17BP.4.R.66

LINE	SHEET NO.
-L-	X-1 THRU X-6

8/23/99

0 2.5 5	PROJ. REFERENCE NO.	SHEET NO.
	17BP.4.R.66	X-1

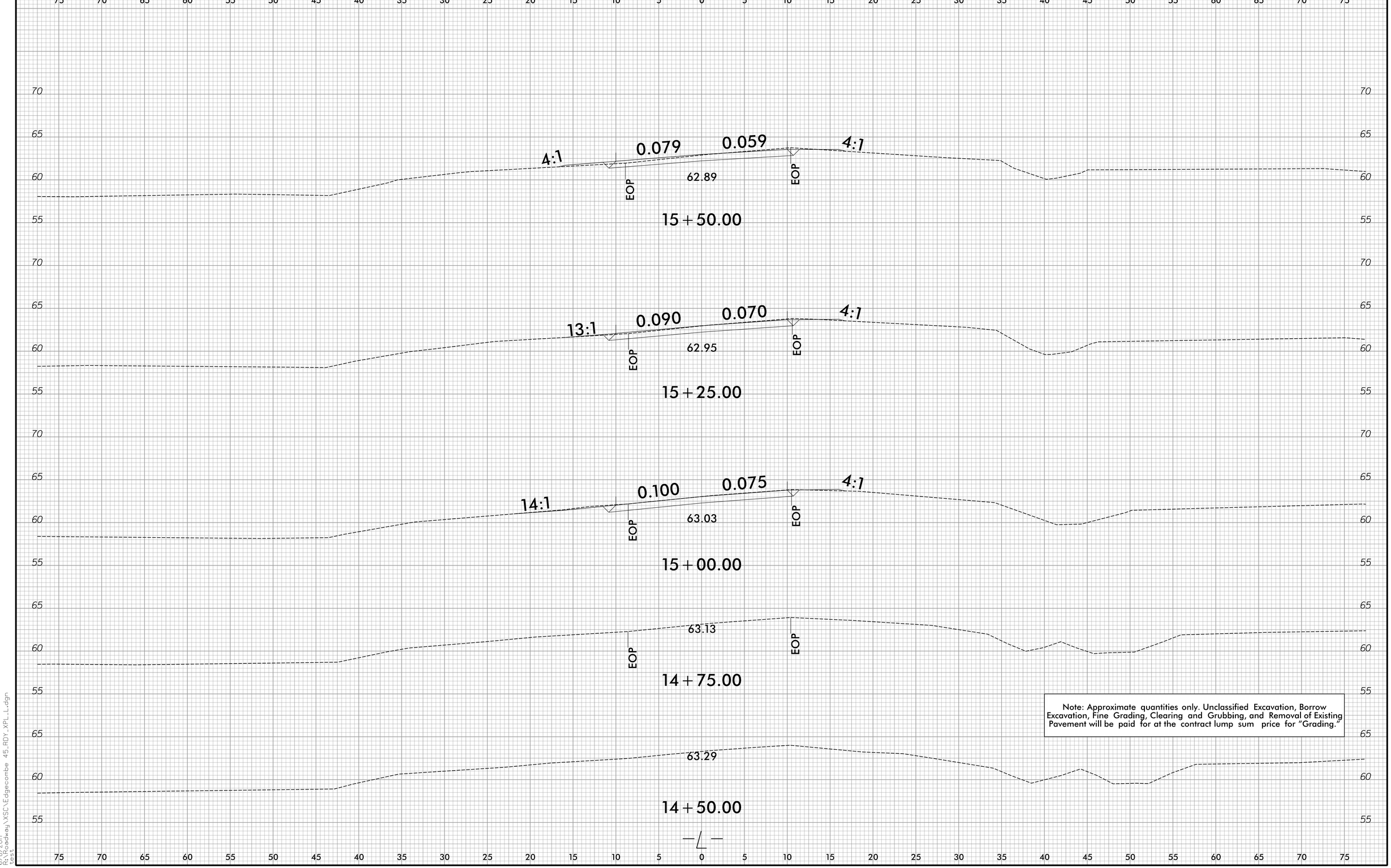

Note: Approximate quantities only. Unclassified Excavation, Borrow Excavation, Fine Grading, Clearing and Grubbing, and Removal of Existing Pavement will be paid for at the contract lump sum price for "Grading."

5/8/2017
R:\Roadway\XSC\Edgecombe 45_RDY_XPL_L.dgn
test

8/23/99

0 2.5 5	PROJ. REFERENCE NO.	SHEET NO.
	17BP.4.R.66	X-2

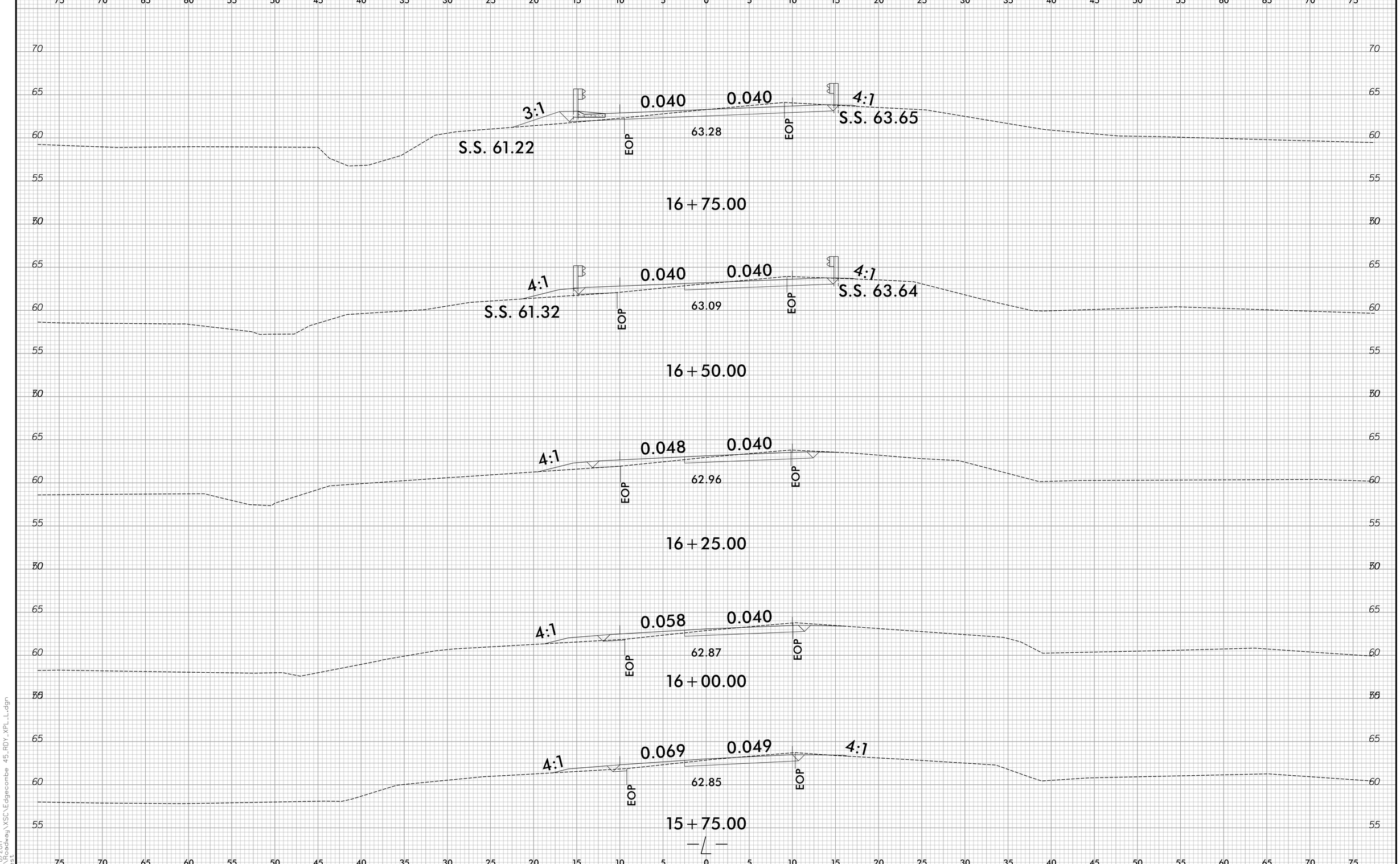

5/8/2017
R:\Roadway\XSC\Edgecombe 45_RDY_XPL_L.dgn
test

8/23/99

0 2.5 5	PROJ. REFERENCE NO.	SHEET NO.
	17BP.4.R.66	X-3

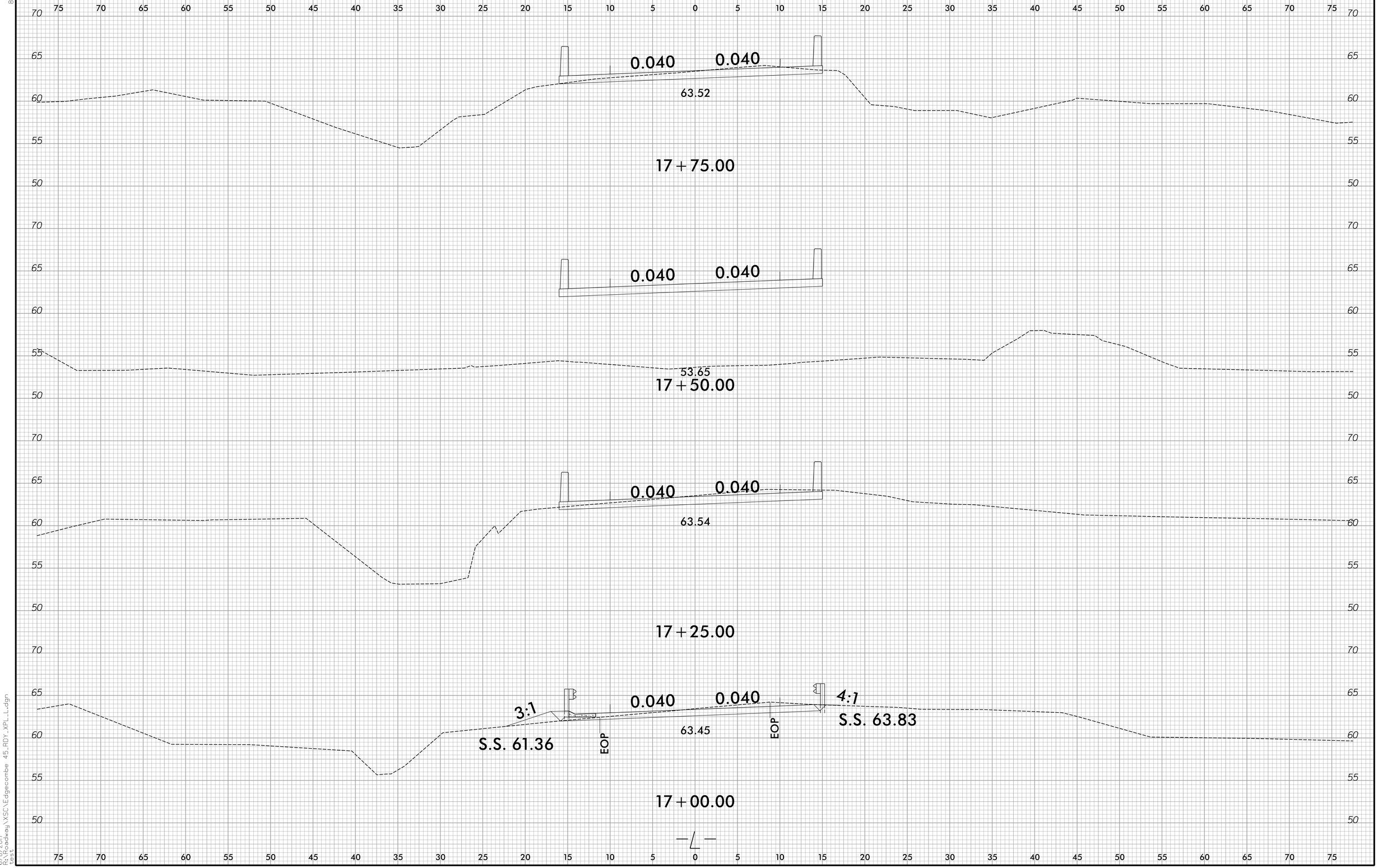

5/8/2017
R:\Roadway\XSC\Edgecombe 45_RDY_XPL_L.dgn
test

8/23/99

0 2.5 5	PROJ. REFERENCE NO.	SHEET NO.
	17BP.4.R.66	X-4

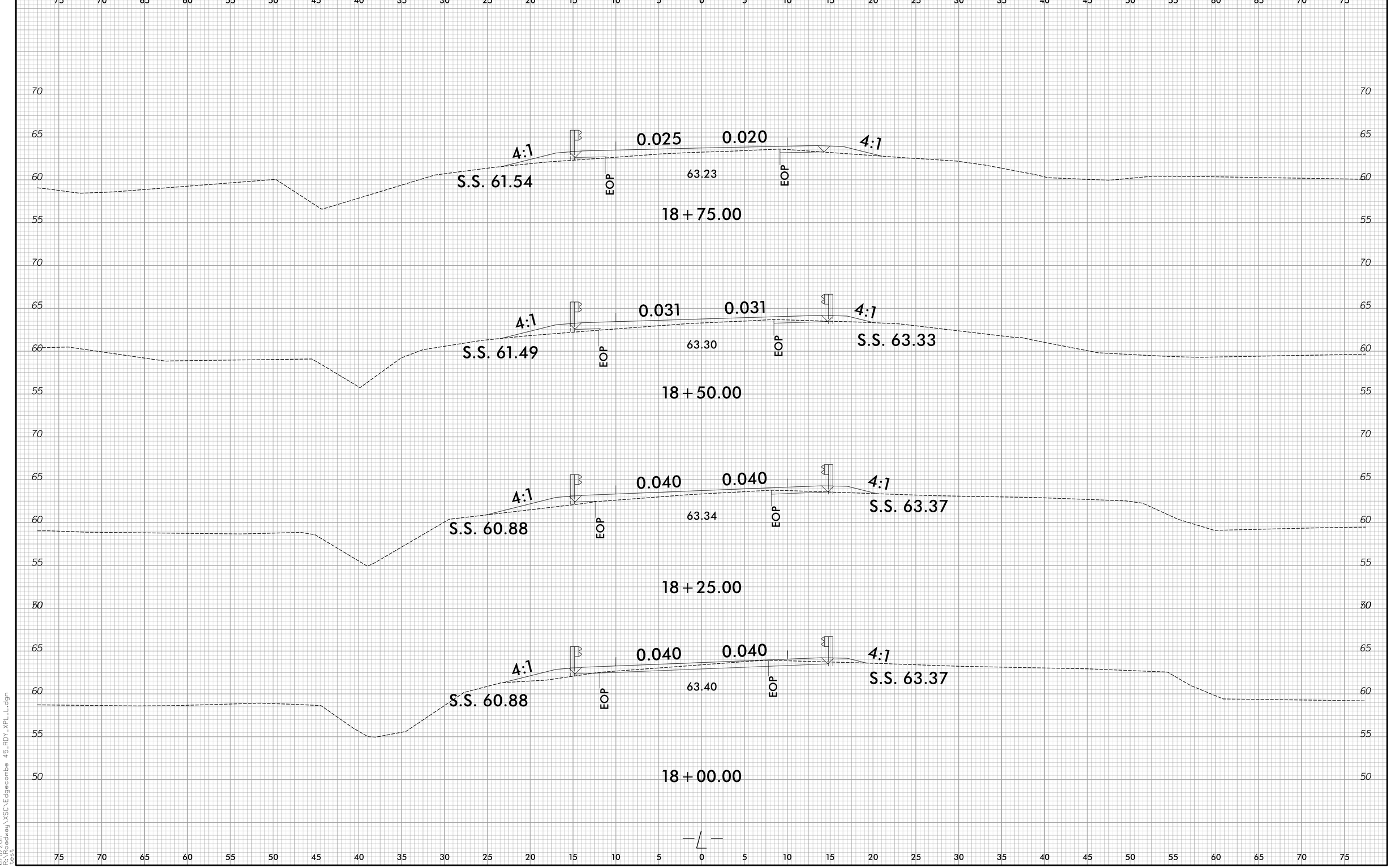

5/8/2017
R:\Roadway\XSC\Edgecombe 45_RDY_XPL_L.dgn
test

8/23/99

0 2.5 5	PROJ. REFERENCE NO.	SHEET NO.
	17BP.4.R.66	X-5

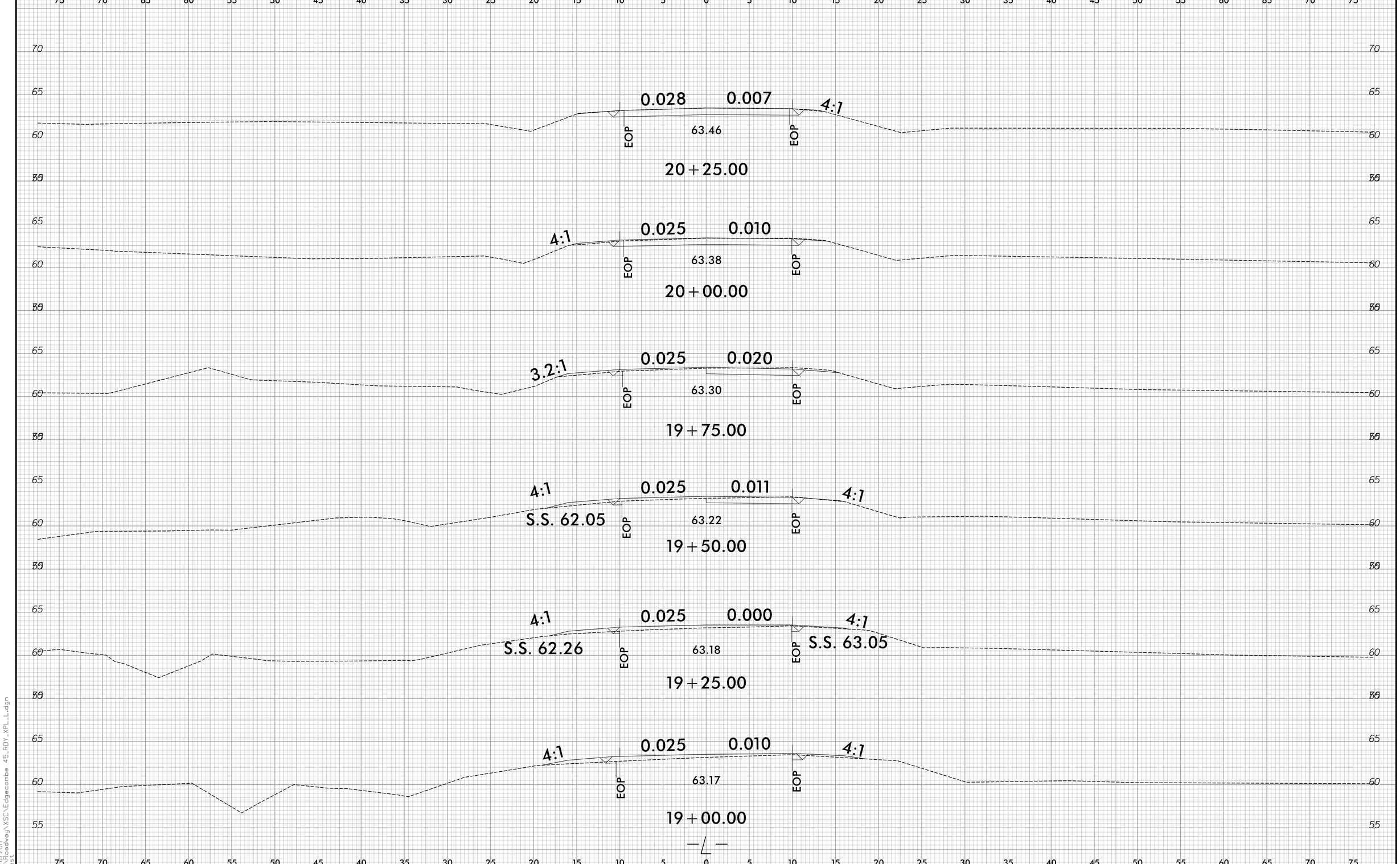

5/8/2017
R:\Roadway\XSC\Edgecombe 45_RDY_XPL_L.dgn
test

8/23/99

0 2.5 5

PROJ. REFERENCE NO.	SHEET NO.
17BP.4.R.66	X-6

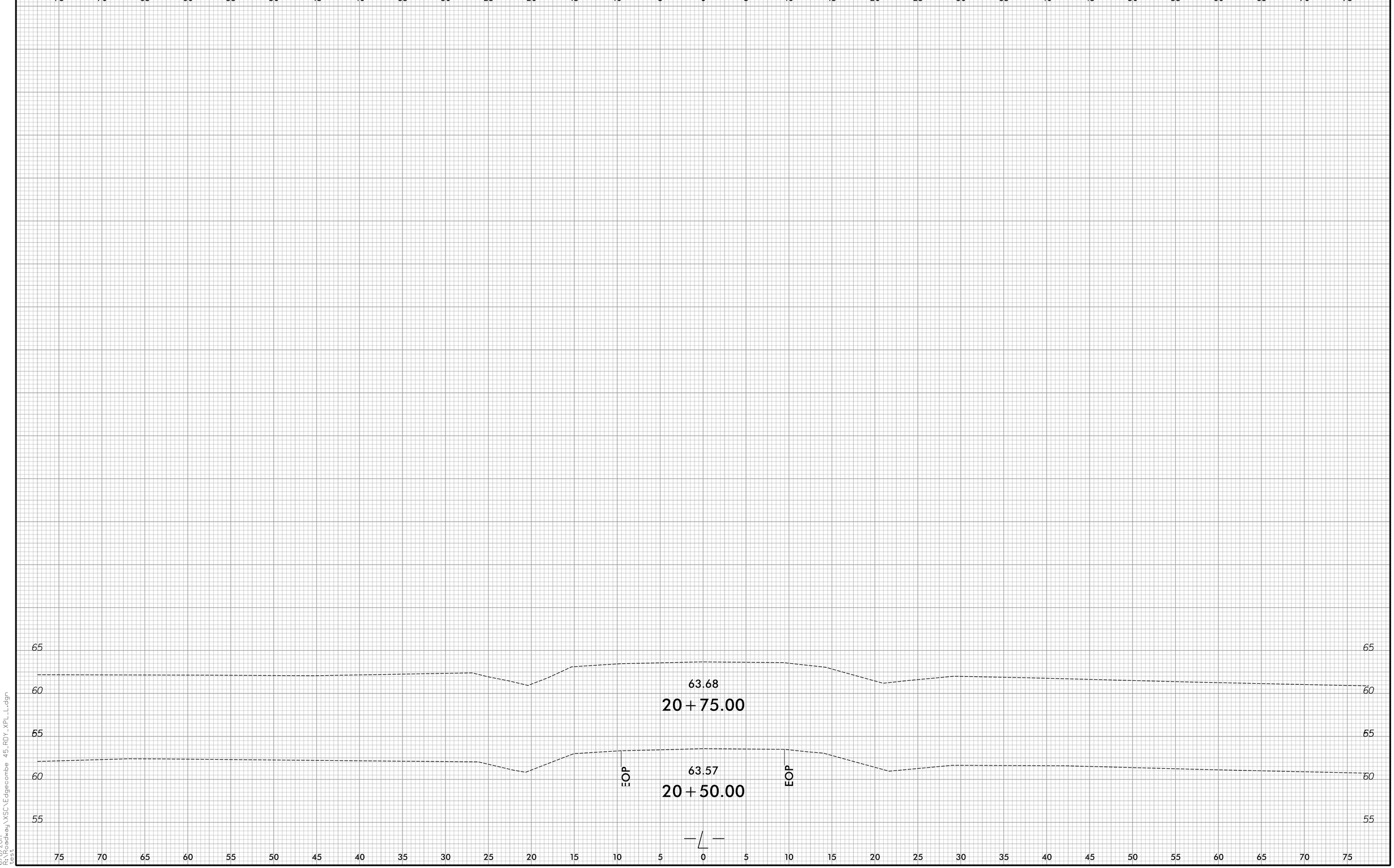

5/8/2017
R:\Roadway\XSC\Edgecombe 45_RDY_XPL_L.dgn
tes1

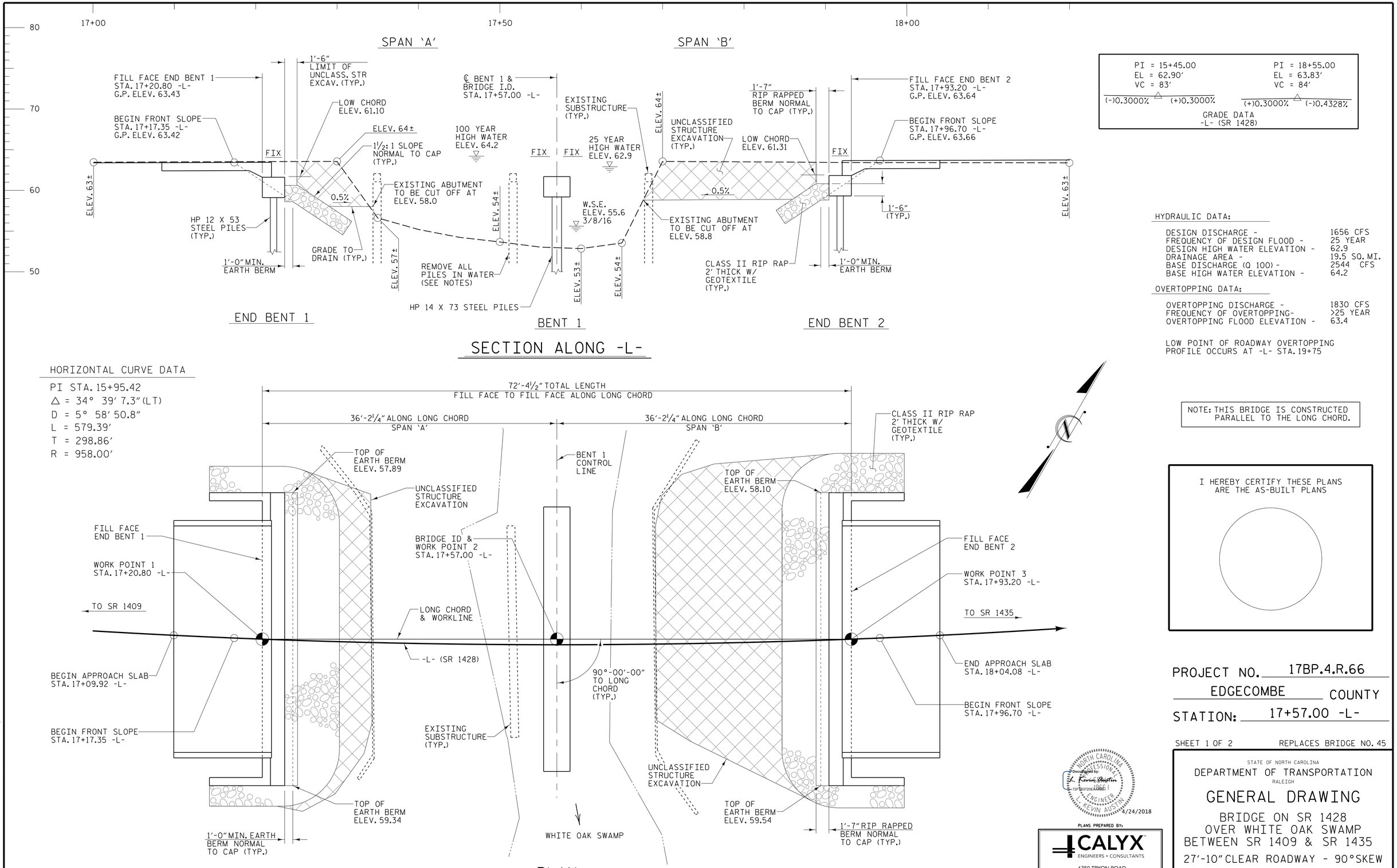

PI = 15+45.00	PI = 18+55.00
EL = 62.90'	EL = 63.83'
VC = 83'	VC = 84'
(-)0.3000% △ (+)0.3000%	(+)0.3000% △ (-)0.4328%

GRADE DATA
-L- (SR 1428)

HYDRAULIC DATA:

DESIGN DISCHARGE -	1656 CFS
FREQUENCY OF DESIGN FLOOD -	25 YEAR
DESIGN HIGH WATER ELEVATION -	62.9
DRAINAGE AREA -	19.5 SQ. MI.
BASE DISCHARGE (Q 100) -	2544 CFS
BASE HIGH WATER ELEVATION -	64.2

OVERTOPPING DATA:

OVERTOPPING DISCHARGE -	1830 CFS
FREQUENCY OF OVERTOPPING-	>25 YEAR
OVERTOPPING FLOOD ELEVATION -	63.4

LOW POINT OF ROADWAY OVERTOPPING PROFILE OCCURS AT -L- STA. 19+75

HORIZONTAL CURVE DATA

PI STA. 15+95.42
△ = 34° 39' 7.3" (LT)
D = 5° 58' 50.8"
L = 579.39'
T = 298.86'
R = 958.00'

NOTE: THIS BRIDGE IS CONSTRUCTED PARALLEL TO THE LONG CHORD.

I HEREBY CERTIFY THESE PLANS ARE THE AS-BUILT PLANS

PROJECT NO. 17BP.4.R.66
EDGECOMBE COUNTY
STATION: 17+57.00 -L-

SHEET 1 OF 2 REPLACES BRIDGE NO. 45

STATE OF NORTH CAROLINA
DEPARTMENT OF TRANSPORTATION
RALEIGH

GENERAL DRAWING

BRIDGE ON SR 1428
OVER WHITE OAK SWAMP
BETWEEN SR 1409 & SR 1435

27'-10" CLEAR ROADWAY - 90° SKEW

NORTH CAROLINA PROFESSIONAL SEAL ENGINEER L. KEVIN AUSTIN 19812
DocuSigned by: L. Kevin Austin 72F1B372DE4D8D...
4/24/2018

PLANS PREPARED BY:
CALYX ENGINEERS + CONSULTANTS
6750 TRYON ROAD
CARY, NC 27518
phone: 919.851.1912
CALYXengineers.com
NC License # F-1333

REVISIONS							SHEET NO.
NO.	BY:	DATE:	NO.	BY:	DATE:		S-1
1			3				TOTAL SHEETS
2			4				16

DRAWN BY : W. B. ALLEN DATE : 1/17
CHECKED BY : Z. H. BROWN DATE : 1/17
DESIGN ENGINEER OF RECORD: L. K. AUSTIN DATE : 5/17

DOCUMENT NOT CONSIDERED FINAL UNLESS ALL SIGNATURES COMPLETED

3/26/2018 10:53:21 AM R:\Structures\17BP.4.R.66_SMU_GD_01.dgn

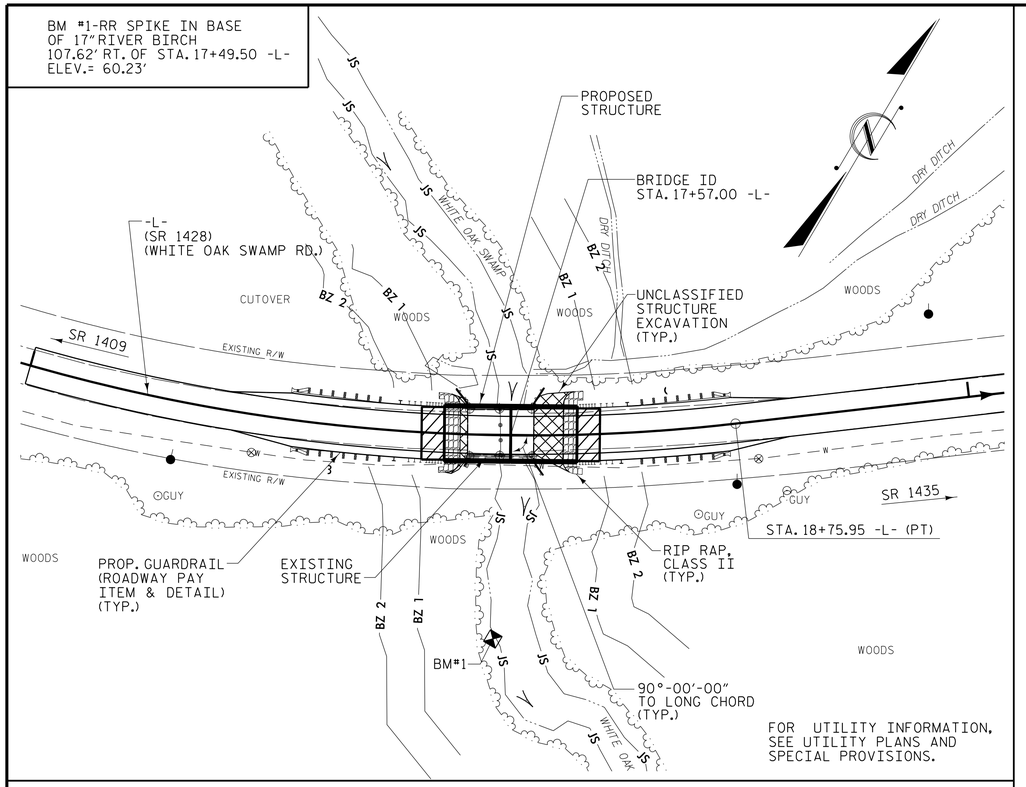

LOCATION SKETCH

NOTES

ASSUMED LIVE LOAD = HL-93 OR ALTERNATE LOADING.

THIS BRIDGE HAS BEEN DESIGNED IN ACCORDANCE WITH THE AASHTO LRFD BRIDGE DESIGN SPECIFICATIONS.

THIS BRIDGE IS LOCATED IN SEISMIC ZONE 1.

FOR EROSION CONTROL MEASURES SEE EROSION CONTROL PLANS.

FOR OTHER DESIGN DATA AND GENERAL NOTES, SEE SHEET SN.

REMOVAL OF THE EXISTING BRIDGE SHALL BE PERFORMED SO AS NOT TO ALLOW DEBRIS TO FALL INTO THE WATER. THE CONTRACTOR SHALL REMOVE THE BRIDGE AND SUBMIT PLANS FOR THE DEMOLITION IN ACCORDANCE WITH ARTICLE 402-2 OF THE STANDARD SPECIFICATIONS.

THE MATERIAL SHOWN ON SHEET 1 OF 2 IN THE CROSS-HATCHED AREA SHALL BE EXCAVATED FOR A MAX. DISTANCE OF 21 FT. RT. AND 23 FT. LT. OF CENTERLINE ROADWAY AS DIRECTED BY THE ENGINEER. THIS WORK WILL BE PAID FOR AT THE LUMP SUM PRICE FOR UNCLASSIFIED STRUCTURE EXCAVATION. SEE SECTION 412 OF THE STANDARD SPECIFICATIONS.

THE EXISTING STRUCTURE CONSISTING OF TWO 17'-6" SPANS WITH A 24' CLEAR ROADWAY WIDTH AND CONCRETE FLOOR ON TIMBER BEAMS SUPPORTED ON TIMBER CAPS, TIMBER PILES & RC JACKET PILES SHALL BE REMOVED. THE BRIDGE IS PRESENTLY POSTED FOR LOAD LIMIT.

THE SUBSTRUCTURE OF THE EXISTING BRIDGE INDICATED ON THE PLANS IS FROM THE BEST INFORMATION AVAILABLE. SINCE THIS INFORMATION IS SHOWN FOR THE CONVENIENCE OF THE CONTRACTOR, THE CONTRACTOR SHALL HAVE NO CLAIM WHATSOEVER AGAINST THE DEPARTMENT OF TRANSPORTATION FOR ANY DELAYS OR ADDITIONAL COST INCURRED BASED ON DIFFERENCES BETWEEN THE EXISTING BRIDGE SUBSTRUCTURE SHOWN ON THE PLANS AND THE ACTUAL CONDITIONS AT THE PROJECT SITE.

IF EXISTING TIMBER PILES CANNOT BE REMOVED, THEY MAY BE CUT-OFF AT THE MUDLINE.

THIS STRUCTURE HAS BEEN DESIGNED IN ACCORDANCE WITH HEC 18, "EVALUATING SCOUR AT BRIDGES".

FOR INTERIOR BENT 1, ONLY PARTIAL GALVANIZING OF THE PILES IS REQUIRED. SEE INTERIOR BENT SHEET FOR REQUIRED GALVANIZED LENGTHS. PAYMENT FOR PARTIALLY GALVANIZED STEEL PILES WILL BE MADE UNDER THE CONTRACT UNIT PRICE FOR GALVANIZED STEEL PILES.

FOR ASBESTOS ASSESSMENT FOR BRIDGE DEMOLITION AND RENOVATIONS ACTIVITIES, SEE SPECIAL PROVISIONS.

FOR SUBMITTAL OF WORKING DRAWINGS, SEE SPECIAL PROVISIONS.

FOR FALSEWORK AND FORMWORK, SEE SPECIAL PROVISIONS.

FOR CRANE SAFETY, SEE SPECIAL PROVISIONS.

FOR GROUT FOR STRUCTURES, SEE SPECIAL PROVISIONS.

NO DECK DRAINS REQUIRED.

ASPHALT WEARING SURFACE IS INCLUDED IN ROADWAY QUANTITY ON ROADWAY PLANS.

FOUNDATION NOTES

FOR PILES, SEE GEOTECHNICAL SPECIAL PROVISIONS AND SECTION 450 OF THE STANDARD SPECIFICATIONS.

PILES AT END BENT NO. 1 AND 2 ARE DESIGNED FOR A FACTORED RESISTANCE OF 70 TONS PER PILE.

DRIVE PILES AT END BENT NO. 1 AND 2 TO A REQUIRED DRIVING RESISTANCE OF 118 TONS PER PILE.

PILES AT BENT NO. 1 ARE DESIGNED FOR A FACTORED RESISTANCE OF 90 TONS PER PILE.

DRIVE PILES AT BENT NO. 1 TO A REQUIRED DRIVING RESISTANCE OF 190 TONS PER PILE. THIS DRIVING RESISTANCE INCLUDES ADDITIONAL RESISTANCE FOR DOWNDRAG OR SCOUR.

INSTALL PILES AT BENT NO. 1 TO A TIP ELEVATION NO HIGHER THAN 18.0 FT.

THE SCOUR CRITICAL ELEVATION FOR BENT NO. 1 IS ELEVATION 36.0 FT. SCOUR ELEVATIONS ARE USED TO MONITOR POSSIBLE SCOUR PROBLEMS DURING THE LIFE OF THE STRUCTURE.

IT HAS BEEN ESTIMATED THAT A HAMMER WITH AN EQUIVALENT RATED ENERGY IN THE RANGE OF 30 TO 45 FT-KIPS PER BLOW WILL BE REQUIRED TO DRIVE PILES AT END BENT NO. 1 AND 2. THIS ESTIMATED ENERGY RANGE DOES NOT RELEASE THE CONTRACTOR FROM PROVIDING DRIVING EQUIPMENT IN ACCORDANCE WITH SUBARTICLE 450-3(D)(2) OF THE STANDARD SPECIFICATIONS.

IT HAS BEEN ESTIMATED THAT A HAMMER WITH AN EQUIVALENT RATED ENERGY IN THE RANGE OF 40 TO 60 FT-KIPS PER BLOW WILL BE REQUIRED TO DRIVE PILES AT BENT NO. 1. THIS ESTIMATED ENERGY RANGE DOES NOT RELEASE THE CONTRACTOR FROM PROVIDING DRIVING EQUIPMENT IN ACCORDANCE WITH SUBARTICLE 450-3(D)(2) OF THE STANDARD SPECIFICATIONS.

TESTING THE FIRST PRODUCTION PILE WITH THE PDA DURING DRIVING, RESTRIKING OR REDRIVING IS REQUIRED AT END BENT NO. 1 AND 2 AND BENT NO. 1. FOR PDA TESTING, SEE SECTION 450 OF THE STANDARD SPECIFICATIONS.

TOTAL BILL OF MATERIAL

	REMOVAL OF EXISTING STRUCTURE	ASBESTOS ASSESSMENT	PDA TESTING	UNCLASSIFIED STRUCTURE EXCAVATION	CLASS A CONCRETE	BRIDGE APPROACH SLABS	REINFORCING STEEL	PILE DRIVING EQUIPMENT SETUP FOR HP 12 X 53 STEEL PILES	PILE DRIVING EQUIPMENT SETUP FOR HP 14 X 73 GALVANIZED STEEL PILES	HP 12 X 53 STEEL PILES		HP 14 X 73 GALVANIZED STEEL PILES		PILE REDRIVES	VERTICAL CONCRETE BARRIER RAIL	RIP RAP CLASS II (2'-0" THICK)	GEOTEXTILE FOR DRAINAGE	ELASTOMERIC BEARINGS	3'-0" X 1'-6" PRESTRESSED CONCRETE CORED SLABS	
	LUMP SUM	LUMP SUM	EACH	LUMP SUM	CU. YARDS	LUMP SUM	LBS.	EACH	EACH	NO.	LIN. FT.	NO.	LIN. FT.	EACH	LIN. FT.	TONS	SQ. YARDS	LUMP SUM	NO.	LIN. FT.
SUPERSTRUCTURE		LUMP SUM				LUMP SUM									140.50			LUMP SUM	20	700.00
END BENT 1				LUMP SUM	12.8		1957	5		5	275			3		43	48			
BENT 1					9.8		1933		7			7	455	4						
END BENT 2				LUMP SUM	12.8		1957	5		5	275			2		38	42			
TOTAL	LUMP SUM	LUMP SUM	2	LUMP SUM	35.4	LUMP SUM	5847	10	7	10	550	7	455	9	140.50	81	90	LUMP SUM	20	700.00

PROJECT NO. 17BP.4.R.66

EDGECOMBE COUNTY

STATION: 17+57.00 -L-

SHEET 2 OF 2

NORTH CAROLINA PROFESSIONAL ENGINEER L. KEVIN AUSTIN

Docusigned By: L. Kevin Austin 72F1B3720E4A9D6...

4/24/2018

PLANS PREPARED BY:

CALYX ENGINEERS + CONSULTANTS
6750 TRYON ROAD
CARY, NC 27518
phone: 919.851.1912
CALYXengineers.com
NC License # F-1333

STATE OF NORTH CAROLINA
DEPARTMENT OF TRANSPORTATION
RALEIGH

GENERAL DRAWING

BRIDGE ON SR 1428
OVER WHITE OAK SWAMP
BETWEEN SR 1409 & SR 1435

27'-10" CLEAR ROADWAY - 90° SKEW

REVISIONS						SHEET NO.
NO.	BY:	DATE:	NO.	BY:	DATE:	S-2
1			3			TOTAL SHEETS
2			4			16

DRAWN BY : W. B. ALLEN DATE : 1/17
CHECKED BY : Z. H. BROWN DATE : 3/17
DESIGN ENGINEER OF RECORD: L. K. AUSTIN DATE : 5/17

DOCUMENT NOT CONSIDERED FINAL UNLESS ALL SIGNATURES COMPLETED

4/3/2018 10:59 PM R:\Structures\17BP.4.R.66_SMU_GD_02.dgn

LOAD AND RESISTANCE FACTOR RATING (LRFD) SUMMARY FOR PRESTRESSED CONCRETE GIRDERS

LEVEL		VEHICLE	WEIGHT (W) (TONS)	CONTROLLING LOAD RATING	MINIMUM RATING FACTORS (RF)	TONS = W X RF	STRENGTH I LIMIT STATE											SERVICE III LIMIT STATE						COMMENT NUMBER
							LIVE-LOAD FACTORS	MOMENT					SHEAR					LIVE-LOAD FACTORS	MOMENT					
								DISTRIBUTION FACTORS (DF)	RATING FACTOR	SPAN	GIRDER LOCATION	DISTANCE FROM LEFT END OF SPAN (ft)	DISTRIBUTION FACTORS (DF)	RATING FACTOR	SPAN	GIRDER LOCATION	DISTANCE FROM LEFT END OF SPAN (ft)		DISTRIBUTION FACTORS (DF)	RATING FACTOR	SPAN	GIRDER LOCATION	DISTANCE FROM LEFT END OF SPAN (ft)	
DESIGN LOAD RATING		HL-93(Inv)	N/A	1	1.26	--	1.75	0.282	1.26	35'	EL	17.50	0.555	3.33	35'	EL	10.50	0.80	0.282	1.40	35'	EL	17.50	
		HL-93(Opr)	N/A	--	1.63	--	1.35	0.282	1.63	35'	EL	17.50	0.555	4.61	35'	EL	7.00	N/A	--	--	--	--	--	
		HS-20(Inv)	36.000	2	1.66	59.76	1.75	0.282	1.66	35'	EL	17.50	0.555	4.01	35'	EL	7.00	0.80	0.282	1.84	35'	EL	14.00	
		HS-20(Opr)	36.000	--	2.15	77.40	1.35	0.282	2.15	35'	EL	17.50	0.555	5.31	35'	EL	7.00	N/A	--	--	--	--	--	
LEGAL LOAD RATING	SV	SNSH	13.500	--	3.20	43.20	1.40	0.282	3.61	35'	EL	17.50	0.555	10.38	35'	EL	7.00	0.80	0.282	3.20	35'	EL	17.50	
		SNGARBS2	20.000	--	2.70	54.00	1.40	0.282	3.06	35'	EL	14.00	0.555	7.92	35'	EL	7.00	0.80	0.282	2.70	35'	EL	14.00	
		SNAGRIS2	22.000	--	2.67	58.74	1.40	0.282	3.02	35'	EL	14.00	0.555	7.60	35'	EL	7.00	0.80	0.282	2.67	35'	EL	14.00	
		SNCOTTS3	27.250	--	1.60	43.60	1.40	0.282	1.81	35'	EL	17.50	0.555	5.05	35'	EL	7.00	0.80	0.282	1.60	35'	EL	17.50	
		SNAGGRS4	34.925	--	1.47	51.34	1.40	0.282	1.66	35'	EL	17.50	0.555	4.60	35'	EL	7.00	0.80	0.282	1.47	35'	EL	17.50	
		SNS5A	35.550	--	1.43	50.84	1.40	0.282	1.61	35'	EL	17.50	0.555	4.91	35'	EL	7.00	0.80	0.282	1.43	35'	EL	17.50	
		SNS6A	39.950	--	1.37	54.73	1.40	0.282	1.55	35'	EL	17.50	0.555	4.58	35'	EL	7.00	0.80	0.282	1.37	35'	EL	17.50	
		SNS7B	42.000	3	1.31	55.02	1.40	0.282	1.48	35'	EL	17.50	0.555	4.69	35'	EL	7.00	0.80	0.282	1.31	35'	EL	17.50	
	TTST	TNAGRIT3	33.000	--	1.70	56.10	1.40	0.282	1.91	35'	EL	17.50	0.555	5.50	35'	EL	7.00	0.80	0.282	1.70	35'	EL	17.50	
		TNT4A	33.075	--	1.71	56.56	1.40	0.282	1.93	35'	EL	17.50	0.555	5.10	35'	EL	7.00	0.80	0.282	1.71	35'	EL	17.50	
		TNT6A	41.600	--	1.48	61.57	1.40	0.282	1.67	35'	EL	17.50	0.555	4.93	35'	EL	7.00	0.80	0.282	1.48	35'	EL	17.50	
		TNT7A	42.000	--	1.53	64.26	1.40	0.282	1.72	35'	EL	17.50	0.555	4.65	35'	EL	7.00	0.80	0.282	1.53	35'	EL	17.50	
		TNT7B	42.000	--	1.60	67.20	1.40	0.282	1.81	35'	EL	17.50	0.555	4.98	35'	EL	7.00	0.80	0.282	1.60	35'	EL	17.50	
		TNAGRIT4	43.000	--	1.52	65.36	1.40	0.282	1.71	35'	EL	14.00	0.555	4.37	35'	EL	7.00	0.80	0.282	1.52	35'	EL	14.00	
		TNAGT5A	45.000	--	1.40	63.00	1.40	0.282	1.58	35'	EL	17.50	0.555	4.76	35'	EL	7.00	0.80	0.282	1.40	35'	EL	17.50	
		TNAGT5B	45.000	--	1.35	60.75	1.40	0.282	1.53	35'	EL	17.50	0.555	4.09	35'	EL	7.00	0.80	0.282	1.35	35'	EL	17.50	

LOAD FACTORS:

	LIMIT STATE	γ_{DC}	γ_{DW}
DESIGN LOAD RATING FACTORS	STRENGTH I	1.25	1.50
	SERVICE III	1.00	1.00

NOTES:

MINIMUM RATING FACTORS ARE BASED ON THE STRENGTH I AND SERVICE III LIMIT STATES.

ALLOWABLE STRESSES FOR SERVICE III LIMIT STATE ARE AS REQUIRED FOR DESIGN.

COMMENTS:

1.
2.
3.
4.

(#) CONTROLLING LOAD RATING

(1) DESIGN LOAD RATING (HL-93)

(2) DESIGN LOAD RATING (HS-20)

(3) LEGAL LOAD RATING **

** SEE CHART FOR VEHICLE TYPE

GIRDER LOCATION

I - INTERIOR GIRDER
EL - EXTERIOR LEFT GIRDER
ER - EXTERIOR RIGHT GIRDER

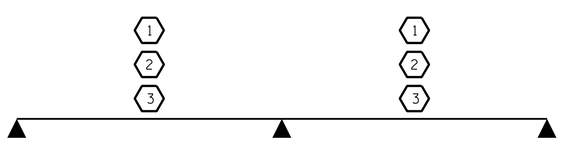

LRFR SUMMARY

FOR SPAN 'A' & 'B'

PROJECT NO. 17BP.4.R.66

EDGECOMBE COUNTY

STATION: 17+57.00 -L-

NORTH CAROLINA PROFESSIONAL ENGINEER L. KEVIN AUSTIN

Docusigned by: L. Kevin Austin 72FB3720EA3466... 4/24/2018

PLANS PREPARED BY:

CALYX ENGINEERS + CONSULTANTS
6750 TRYON ROAD
CARY, NC 27518
phone: 919.851.1912
CALYXengineers.com
NC License # F-1333

STATE OF NORTH CAROLINA
DEPARTMENT OF TRANSPORTATION
RALEIGH

LRFR SUMMARY FOR 35' CORED SLAB UNIT 90° SKEW (NON-INTERSTATE TRAFFIC)

REVISIONS						SHEET NO.
NO.	BY:	DATE:	NO.	BY:	DATE:	S-3
1			3			TOTAL SHEETS
2			4			16

DOCUMENT NOT CONSIDERED FINAL UNLESS ALL SIGNATURES COMPLETED

DRAWN BY :	W. B. ALLEN	DATE :	1/17
CHECKED BY :	Z. H. BROWN	DATE :	1/17
DESIGN ENGINEER OF RECORD:	L. K. AUSTIN	DATE :	5/17

5/10/2017 8:47:02 AM R:\Structures\17BP.4.R.66_SMU_LRFR_01.dgn

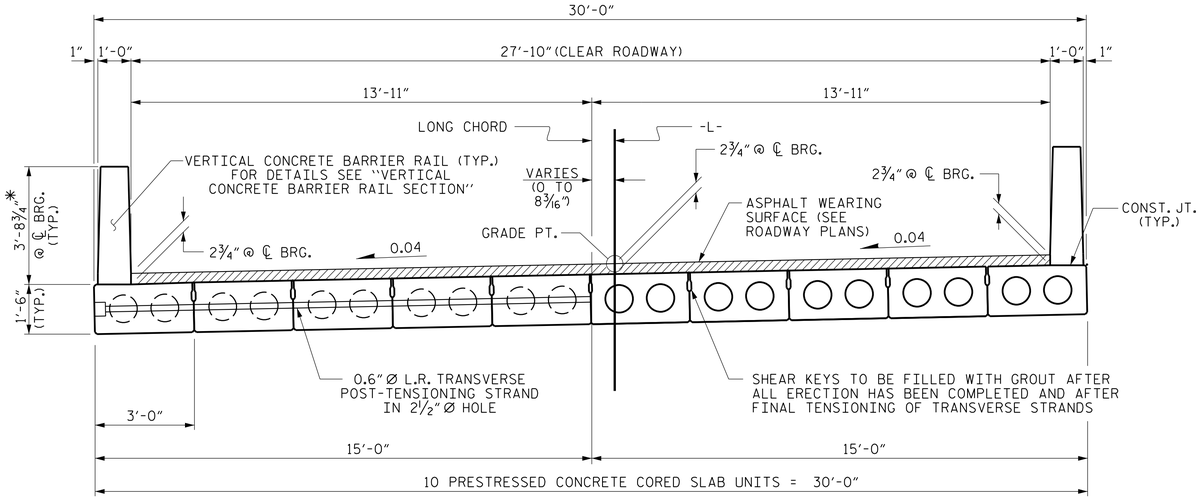

HALF SECTION
AT INTERMEDIATE DIAPHRAGMS

HALF SECTION
THROUGH VOIDS

TYPICAL SECTION

* - THE MAXIMUM BARRIER RAIL HEIGHT AND ASPHALT THICKNESS IS SHOWN. THE HEIGHT OF THE BARRIER RAIL AND ASPHALT THICKNESS VARIES WHILE THE TOP OF THE BARRIER RAIL FOLLOWS THE PROFILE OF THE GUTTERLINE. FOR RAIL HEIGHT DETAILS AND ASPHALT THICKNESS SEE THE "VERTICAL CONCRETE BARRIER RAIL SECTION" DETAIL.

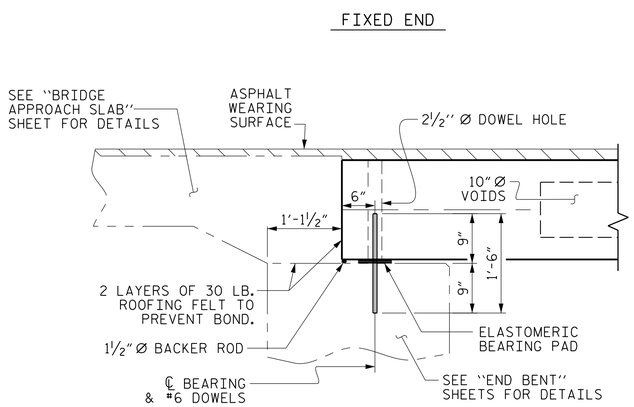

SECTION AT END BENT

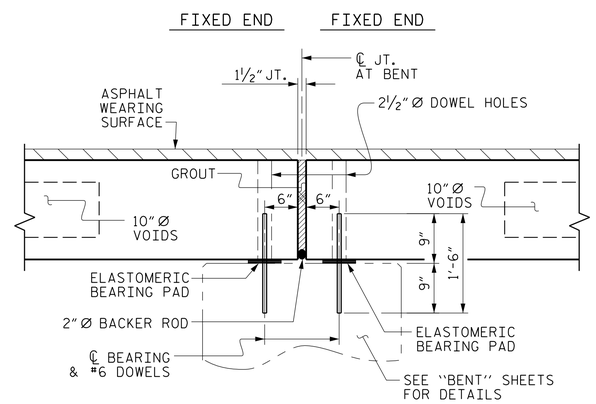

SECTION AT BENT

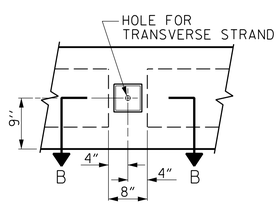

ELEVATION VIEW

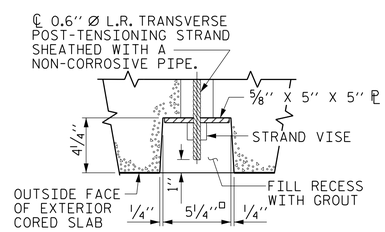

SECTION B-B

GROUTED RECESS AT END OF POST-TENSIONED STRAND OF CORED SLABS

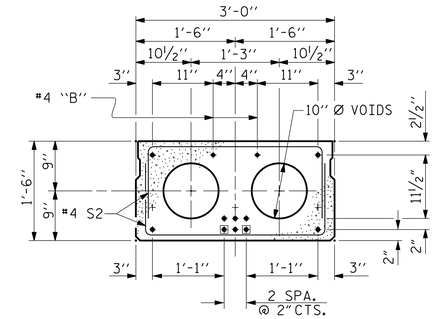

INTERIOR SLAB SECTION
(35' UNIT)
(10 STRANDS REQUIRED)

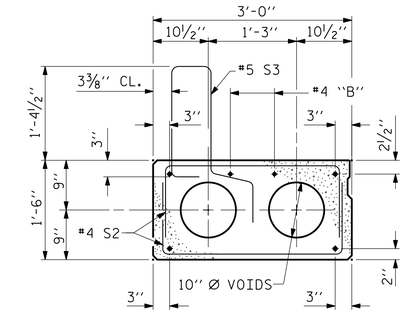

EXT. SLAB SECTION
(FOR PRESTRESSED STRAND LAYOUT, SEE INTERIOR SLAB SECTION.)

0.6" Ø LOW RELAXATION STRAND LAYOUT

◉ BOND SHALL BE BROKEN ON THESE STRANDS FOR A DISTANCE OF 2'-0" FROM END OF CORED SLAB UNIT. SEE STANDARD SPECIFICATIONS, ARTICLE 1078-7.

DEBONDING LEGEND

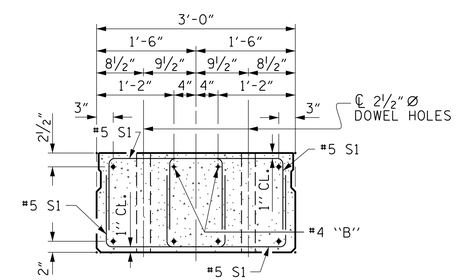

END ELEVATION

SHOWING PLACEMENT OF DOUBLE STIRRUPS AND LOCATION OF DOWEL HOLES. (STRAND LAYOUT NOT SHOWN.) INTERIOR SLAB UNIT SHOWN-EXTERIOR SLAB UNIT SIMILAR EXCEPT SHEAR KEY LOCATION.

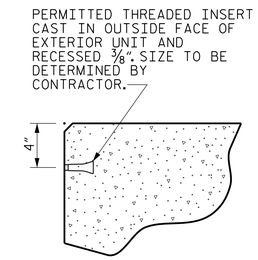

THREADED INSERT DETAIL

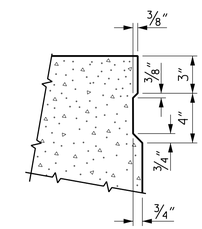

SHEAR KEY DETAIL

NOTE: OMIT SHEAR KEY ON OUTSIDE FACE OF EXTERIOR CORED SLABS.

PROJECT NO. 17BP.4.R.66

EDGECOMBE COUNTY

STATION: 17+57.00 -L-

SHEET 1 OF 3

STATE OF NORTH CAROLINA
DEPARTMENT OF TRANSPORTATION
RALEIGH

3'-0" X 1'-6" PRESTRESSED CONCRETE CORED SLAB UNIT 90° SKEW

NORTH CAROLINA PROFESSIONAL ENGINEER SEAL KEVIN AUSTIN 4/24/2018
Docusigned by: L. Kevin Austin 7221B3720EC4AB...

PLANS PREPARED BY:
CALYX ENGINEERS + CONSULTANTS
6750 TRYON ROAD
CARY, NC 27518
phone: 919.851.1912
CALYXengineers.com
NC License # F-1333

DOCUMENT NOT CONSIDERED FINAL UNLESS ALL SIGNATURES COMPLETED

REVISIONS						SHEET NO.
NO.	BY:	DATE:	NO.	BY:	DATE:	S-4
1			3			TOTAL SHEETS
2			4			16

DRAWN BY :	W. B. ALLEN	DATE :	1/17
CHECKED BY :	Z. H. BROWN	DATE :	1/17
DESIGN ENGINEER OF RECORD:	L. K. AUSTIN	DATE :	5/17

5/10/2017 8:47:04 AM R:\Structures\17BP.4.R.66_SMU_CS_01.dgn

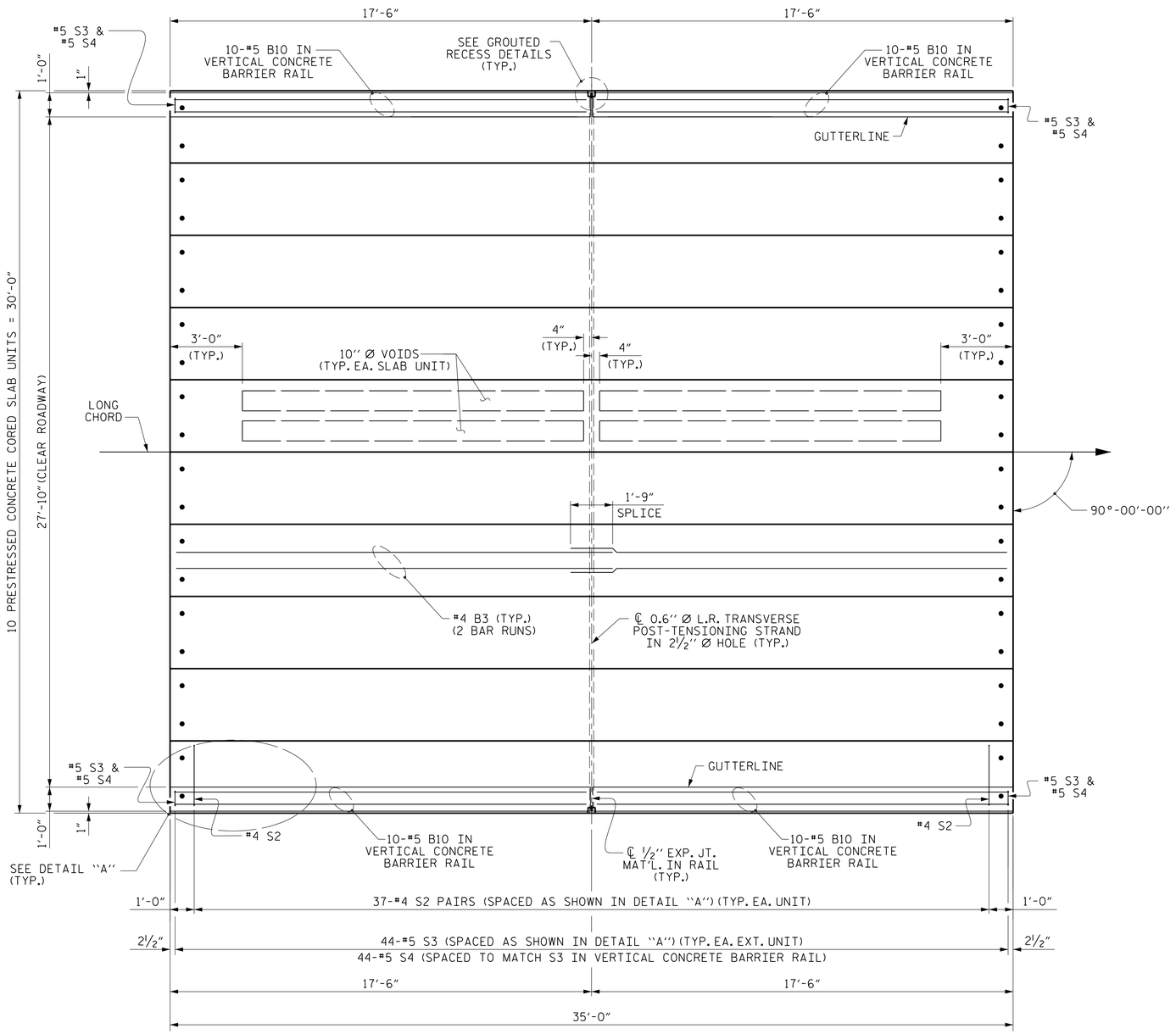

PLAN OF UNIT

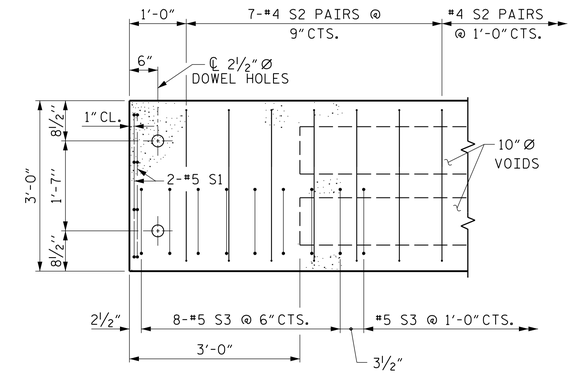

DETAIL "A"

(TYPICAL EACH END OF UNIT)
NOTE: EXTERIOR UNIT SHOWN - INTERIOR UNIT SIMILAR EXCEPT OMIT #5 S3 BARS.

PROJECT NO. 17BP.4.R.66
EDGECOMBE COUNTY
STATION: 17+57.00 -L-

SHEET 2 OF 3

STATE OF NORTH CAROLINA
DEPARTMENT OF TRANSPORTATION
RALEIGH

PLAN OF 35' UNIT 90° SKEW

NORTH CAROLINA PROFESSIONAL ENGINEER SEAL L. KEVIN AUSTIN 19166
DocuSigned by: L. Kevin Austin 7221DF6F28A9...
4/24/2018

PLANS PREPARED BY:
CALYX ENGINEERS + CONSULTANTS
6750 TRYON ROAD
CARY, NC 27518
phone: 919.851.1912
CALYXengineers.com
NC License # F-1333

DOCUMENT NOT CONSIDERED FINAL UNLESS ALL SIGNATURES COMPLETED

DRAWN BY :	W. B. ALLEN	DATE :	1/17
CHECKED BY :	Z. H. BROWN	DATE :	1/17
DESIGN ENGINEER OF RECORD:	L. K. AUSTIN	DATE :	5/17

REVISIONS						SHEET NO.
NO.	BY:	DATE:	NO.	BY:	DATE:	S-5
1			3			TOTAL SHEETS
2			4			16

5/10/2017 8:47:05 AM R:\Structures\17BP.4.R.66_SMU_CS_02.dgn

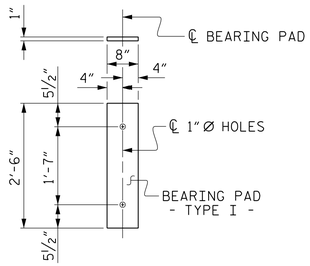

FIXED END
(TYPE I - 40 REQ'D)

ELASTOMERIC BEARING DETAILS

ELASTOMER IN ALL BEARINGS SHALL BE 50 DUROMETER HARDNESS.

CORED SLABS REQUIRED			
	NUMBER	LENGTH	TOTAL LENGTH
35' UNIT			
EXTERIOR C.S.	4	35'-0"	140'-0"
INTERIOR C.S.	16	35'-0"	560'-0"
TOTAL	20		700'-0"

DEAD LOAD DEFLECTION AND CAMBER		
	3'-0" x 1'-6"	
35' CORED SLAB UNIT	0.6" Ø L.R. STRAND	
CAMBER (SLAB ALONE IN PLACE)	5/16"	↑
DEFLECTION DUE TO SUPERIMPOSED DEAD LOAD**	1/8"	↓
FINAL CAMBER	3/16"	↑

** INCLUDES FUTURE WEARING SURFACE

GUTTERLINE ASPHALT THICKNESS & RAIL HEIGHT		
	ASPHALT OVERLAY THICKNESS	RAIL HEIGHT
	@ MID-SPAN	@ MID-SPAN
35' UNITS	2⅝"	3'-8⅝"

GRADE 270 STRANDS	
	0.6" Ø L.R.
AREA (SQUARE INCHES)	0.217
ULTIMATE STRENGTH (LBS. PER STRAND)	58,600
APPLIED PRESTRESS (LBS. PER STRAND)	43,950

BAR TYPES

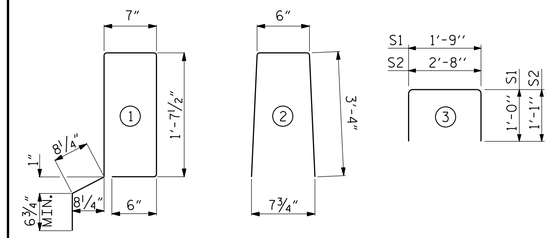

ALL BAR DIMENSIONS ARE OUT TO OUT

BILL OF MATERIAL FOR ONE 35' CORED SLAB UNIT

				EXTERIOR UNIT		INTERIOR UNIT	
BAR	NUMBER	SIZE	TYPE	LENGTH	WEIGHT	LENGTH	WEIGHT
B3	4	#4	STR	18'-3"	49	18'-3"	49
S1	8	#5	3	3'-9"	31	3'-9"	31
S2	74	#4	3	4'-10"	239	4'-10"	239
* S3	44	#5	1	5'-7"	256		
REINFORCING STEEL			LBS.		319		319
* EPOXY COATED REINFORCING STEEL			LBS.		256		
6500 P.S.I. CONCRETE			CU. YDS.		4.9		4.9
0.6" Ø L.R. STRANDS			No.		10		10

BILL OF MATERIAL FOR VERTICAL CONCRETE BARRIER RAIL

BAR	BARS PER PAIR OF EXTERIOR UNITS	TOTAL NO.	SIZE	TYPE	LENGTH	WEIGHT
	35' UNIT					
*B10	40	80	#5	STR	17'-1"	1426
* S4	88	176	#5	2	7'-2"	1316
* EPOXY COATED REINFORCING STEEL				LBS.		2742
CLASS AA CONCRETE				CU.YDS.		18.0
TOTAL VERTICAL CONCRETE BARRIER RAIL				LN. FT.		140.50

NOTES

ALL PRESTRESSING STRANDS SHALL BE 7-WIRE LOW RELAXATION GRADE 270 STRANDS AND SHALL CONFORM TO AASHTO M203 EXCEPT FOR SAMPLING REQUIREMENTS WHICH SHALL BE IN ACCORDANCE WITH THE STANDARD SPECIFICATIONS.

ALL REINFORCING STEEL CAST WITH THE CORED SLAB SECTIONS SHALL BE GRADE 60 AND SHALL BE INCLUDED IN THE UNIT PRICE BID FOR PRESTRESSED CONCRETE CORED SLABS.

RECESSES FOR TRANSVERSE STRANDS SHALL BE GROUTED AFTER THE TENSIONING OF THE STRANDS.

THE 2½" Ø DOWEL HOLES AT FIXED ENDS OF SLAB SECTIONS SHALL BE FILLED WITH NON-SHRINK GROUT.

THE BACKER RODS SHALL CONFORM TO THE REQUIREMENTS OF TYPE M BOND BREAKER. SEE SECTION 1028 OF THE STANDARD SPECIFICATIONS.

WHEN CORED SLABS ARE CAST, AN INTERNAL HOLD-DOWN SYSTEM SHALL BE EMPLOYED TO PREVENT VOIDS FROM RISING OR MOVING SIDEWAYS. AT LEAST SIX WEEKS PRIOR TO CASTING CORED SLABS, THE CONTRACTOR SHALL SUBMIT TO THE ENGINEER FOR REVIEW AND COMMENT, DETAILED DRAWINGS OF THE PROPOSED HOLD-DOWN SYSTEM. IN ADDITION TO STRUCTURAL DETAILS, LOCATION AND SPACING OF THE HOLD-DOWNS SHALL BE INDICATED.

ALL REINFORCING STEEL IN THE VERTICAL CONCRETE BARRIER RAIL SHALL BE EPOXY COATED.

PRESTRESSING STRANDS SHALL BE CUT FLUSH WITH THE CORED SLAB UNIT ENDS.

APPLY EPOXY PROTECTIVE COATING TO CORED SLAB UNIT ENDS.

GROOVED CONTRACTION JOINTS, ½" IN DEPTH, SHALL BE TOOLED IN ALL EXPOSED FACES OF THE BARRIER RAIL AND IN ACCORDANCE WITH ARTICLE 825-10(B) OF THE STANDARD SPECIFICATIONS. A CONTRACTION JOINT SHALL BE LOCATED AT EACH THIRD POINT BETWEEN BARRIER RAIL EXPANSION JOINTS. ONLY ONE CONTRACTION JOINT IS REQUIRED AT MIDPOINT OF BARRIER RAIL SEGMENTS LESS THAN 20 FEET IN LENGTH AND NO CONTRACTION JOINTS ARE REQUIRED FOR THOSE SEGMENTS LESS THAN 10 FEET IN LENGTH.

FLAME CUTTING OF THE TRANSVERSE POST-TENSIONING STRAND IS NOT ALLOWED.

THE TRANSFER OF LOAD FROM THE ANCHORAGES TO THE CORED SLAB UNIT SHALL BE DONE WHEN THE CONCRETE HAS REACHED A COMPRESSIVE STRENGTH OF NOT LESS THAN THE REQUIRED STRENGTH SHOWN IN THE "CONCRETE RELEASE STRENGTH" TABLE.

FOR GROUT FOR STRUCTURES, SEE SPECIAL PROVISIONS.

THE PERMITTED THREADED INSERTS ARE DETAILED AS AN OPTION FOR THE CONTRACTOR TO ATTACH FALSEWORK AND FORMWORK DURING CONSTRUCTION.

THE PERMITTED THREADED INSERTS IN THE EXTERIOR UNITS SHALL BE SIZED BY THE CONTRACTOR, SPACED AT 4'-0" CENTERS AND GALVANIZED IN ACCORDANCE WITH SECTION 1076 OF THE STANDARD SPECIFICATIONS. STAINLESS STEEL THREADED INSERTS MAY BE USED AS AN ALTERNATE.

THE PERMITTED THREADED INSERTS SHALL BE GROUTED BY THE CONTRACTOR IMMEDIATELY FOLLOWING REMOVAL OF THE FALSEWORK.

THE COST OF THE PERMITTED THREADED INSERTS SHALL BE INCLUDED IN THE PRICE BID FOR THE PRECAST UNITS.

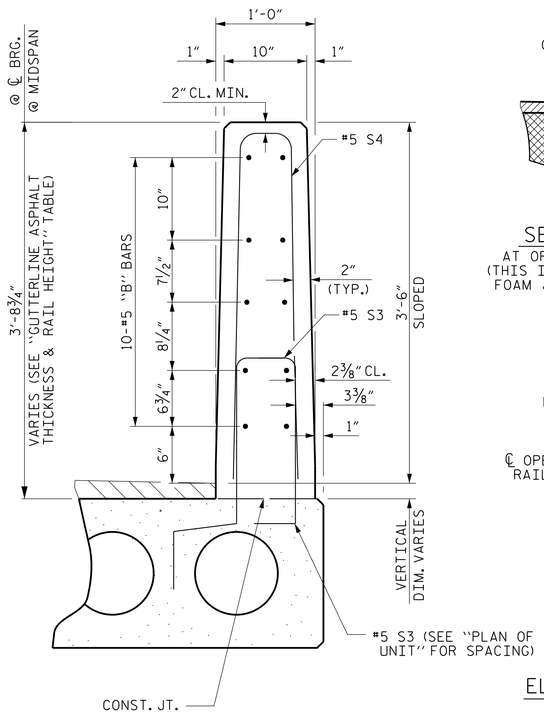

VERTICAL CONCRETE BARRIER RAIL SECTION

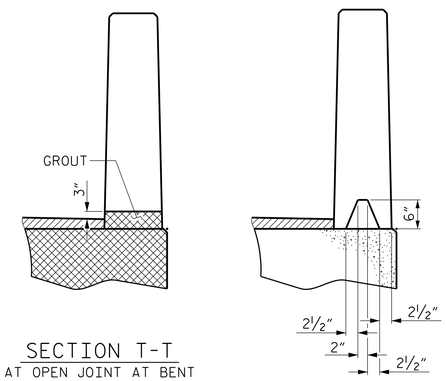

SECTION T-T
AT OPEN JOINT AT BENT
(THIS IS TO BE USED WHERE FOAM JOINT IS NOT USED)

SECTION S-S
AT DAM IN OPEN JOINT
(THIS IS TO BE USED ONLY WHEN SLIP FORM IS USED)

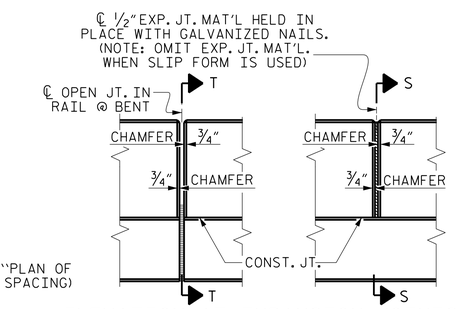

ELEVATION AT EXPANSION JOINTS

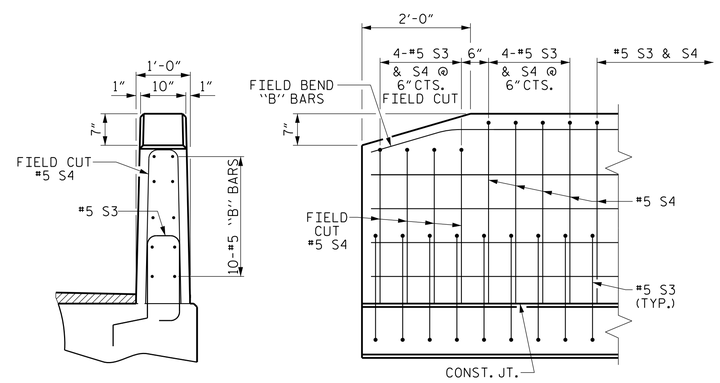

END VIEW

SIDE VIEW

END OF RAIL DETAILS

CONCRETE RELEASE STRENGTH	
UNIT	PSI
35' UNITS	5000

PROJECT NO. 17BP.4.R.66

EDGECOMBE COUNTY

STATION: 17+57.00 -L-

SHEET 3 OF 3

NORTH CAROLINA PROFESSIONAL SEAL ENGINEER L. KEVIN AUSTIN 036661
Docusigned by: L. Kevin Austin 72F1B8720EA4BB...
4/24/2018

PLANS PREPARED BY:

CALYX ENGINEERS + CONSULTANTS
6750 TRYON ROAD
CARY, NC 27518
phone: 919.851.1912
CALYXengineers.com
NC License # F-1333

DOCUMENT NOT CONSIDERED FINAL UNLESS ALL SIGNATURES COMPLETED

STATE OF NORTH CAROLINA
DEPARTMENT OF TRANSPORTATION
RALEIGH

3'-0" X 1'-6" PRESTRESSED CONCRETE CORED SLAB UNIT 90° SKEW

REVISIONS							SHEET NO.
NO.	BY:	DATE:	NO.	BY:	DATE:		S-6
1			3				TOTAL SHEETS
2			4				16

DRAWN BY :	W. B. ALLEN	DATE :	1/17
CHECKED BY :	Z. H. BROWN	DATE :	1/17
DESIGN ENGINEER OF RECORD:	L. K. AUSTIN	DATE :	5/17

5/10/2017 8:47:06 AM R:\Structures\17BP.4.R.66_SMU_CS_03.dgn

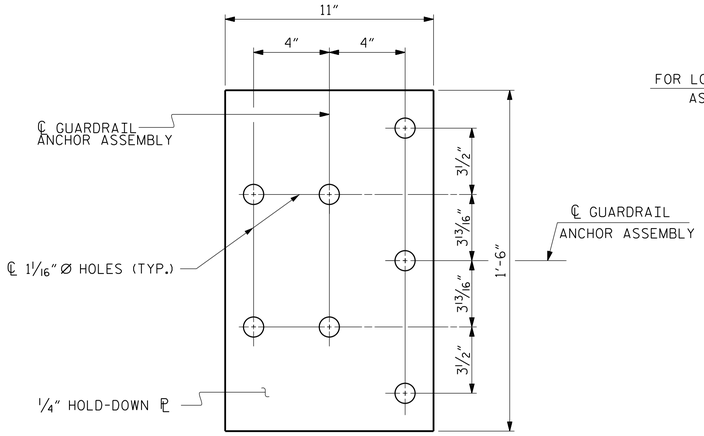

PLAN

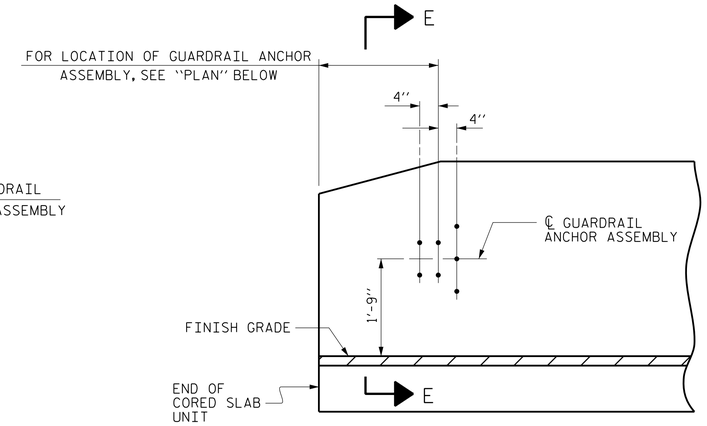

ELEVATION

NOTES

THE GUARDRAIL ANCHOR ASSEMBLY SHALL CONSIST OF A 1/4" HOLD DOWN PLATE AND 7 - 7/8" Ø BOLTS WITH NUTS AND WASHERS.

THE HOLD-DOWN PLATE SHALL CONFORM TO AASHTO M270 GRADE 36. AFTER FABRICATION, THE HOLD-DOWN PLATE SHALL BE HOT-DIP GALVANIZED IN ACCORDANCE WITH AASHTO M111.

BOLTS SHALL CONFORM TO THE REQUIREMENTS OF ASTM A307 AND NUTS SHALL CONFORM TO THE REQUIREMENTS OF AASHTO M291. BOLTS, NUTS AND WASHERS SHALL BE GALVANIZED. (AT THE CONTRACTOR'S OPTION, STAINLESS STEEL BOLTS, NUTS AND WASHERS MAY BE USED AS AN ALTERNATE FOR THE 7/8" Ø GALVANIZED BOLTS, NUTS AND WASHERS. THEY SHALL CONFORM TO OR EXCEED THE MECHANICAL REQUIREMENTS OF ASTM A307. THE USE OF THIS ALTERNATE SHALL BE APPROVED BY THE ENGINEER.)

THE GUARDRAIL ANCHOR ASSEMBLY IS REQUIRED AT ALL POINTS WHERE APPROACH GUARDRAIL IS TO BE ATTACHED TO THE END OF BARRIER RAIL. FOR POINTS OF ATTACHMENT, SEE SKETCH.

AFTER INSTALLATION, THE EXPOSED THREAD OF THE BOLT SHALL BE BURRED WITH A SHARP POINTED TOOL.

THE COST OF THE GUARDRAIL ANCHOR ASSEMBLY SHALL BE INCLUDED IN THE UNIT CONTRACT PRICE BID FOR VERTICAL CONCRETE BARRIER RAIL.

THE VERTICAL REINFORCING BARS MAY BE SHIFTED SLIGHTLY IN THE VERTICAL CONCRETE BARRIER RAIL TO CLEAR ASSEMBLY BOLTS.

THE 1 1/4" Ø HOLES SHALL BE FORMED OR DRILLED WITH A CORE BIT. IMPACT TOOLS WILL NOT BE PERMITTED. ANY CONCRETE DAMAGED BY THIS WORK SHALL BE REPAIRED TO THE SATISFACTION OF THE ENGINEER.

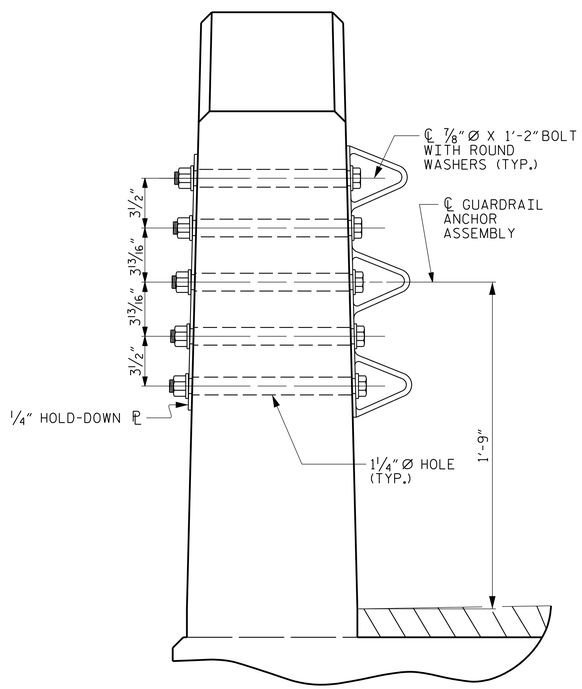

SECTION E-E

GUARDRAIL ANCHOR ASSEMBLY DETAILS

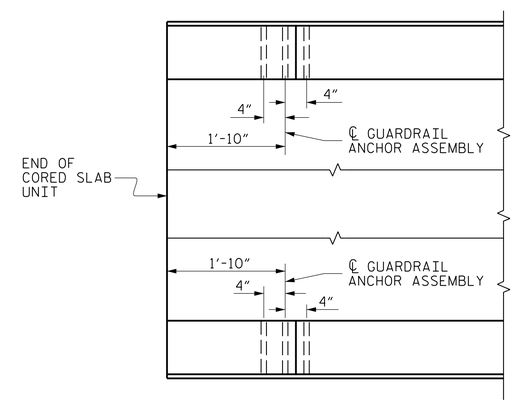

PLAN

LOCATION OF ANCHORS FOR GUARDRAIL

END BENT #1 SHOWN, END BENT #2 SIMILAR.

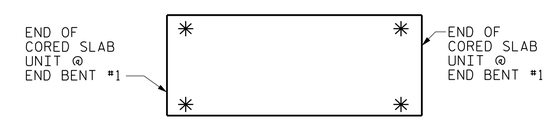

SKETCH SHOWING POINTS OF ATTACHMENT

✳ DENOTES GUARDRAIL ANCHOR ASSEMBLY

PROJECT NO. 17BP.4.R.66

EDGECOMBE COUNTY

STATION: 17+57.00 -L-

ASSEMBLED BY : W. B. ALLEN		DATE : 2/18	
CHECKED BY : Z. H. BROWN		DATE : 2/18	
DRAWN BY : MAA 5/10	REV. 6/13	MAA/GM	
CHECKED BY : GM 5/10	REV. 1/15	MAA/TMG	
	REV. 12/17	MAA/THC	

PLANS PREPARED BY:

CALYX ENGINEERS + CONSULTANTS
6750 TRYON ROAD
CARY, NC 27518
phone: 919.851.1912
CALYXengineers.com
NC License # F-1333

DOCUMENT NOT CONSIDERED FINAL UNLESS ALL SIGNATURES COMPLETED

THIS STANDARD DRAWING REVIEWED & ADOPTED FOR USE AT THE REFERENCED LOCATION BY THE UNDERSIGNED:

NORTH CAROLINA PROFESSIONAL ENGINEER SEAL L. KEVIN AUSTIN

DocuSigned by: L. Kevin Austin 729FB3720EK0D6...

4/24/2018

STATE OF NORTH CAROLINA
DEPARTMENT OF TRANSPORTATION
RALEIGH

STANDARD
GUARDRAIL ANCHORAGE DETAILS FOR VERTICAL CONCRETE BARRIER RAIL

REVISIONS						SHEET NO.
NO.	BY:	DATE:	NO.	BY:	DATE:	S-7
1			3			TOTAL SHEETS
2			4			16

STD. NO. GRA3

3/27/2018 1:35:54 PM R:\Structures\17BP.4.R.66_SMU_GR_01.dgn

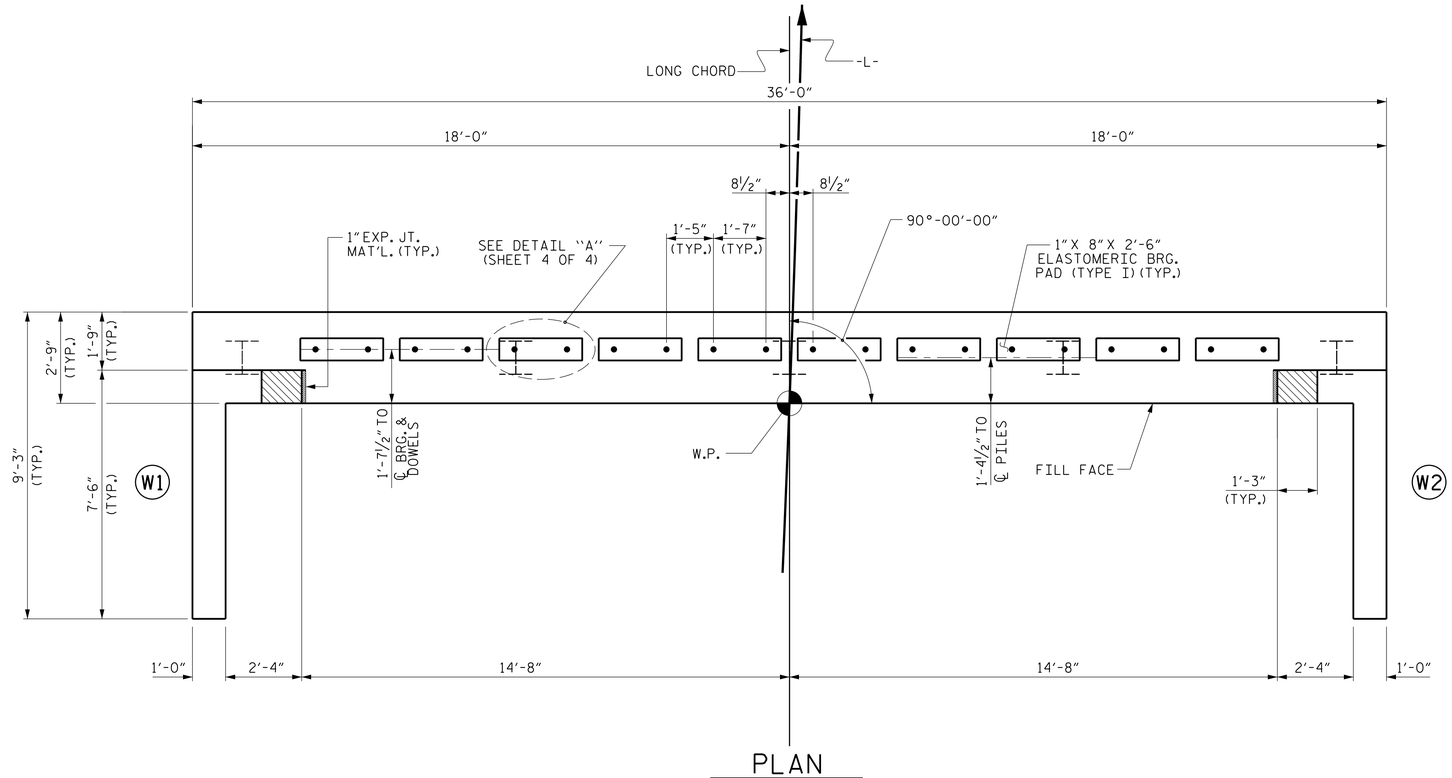

PLAN

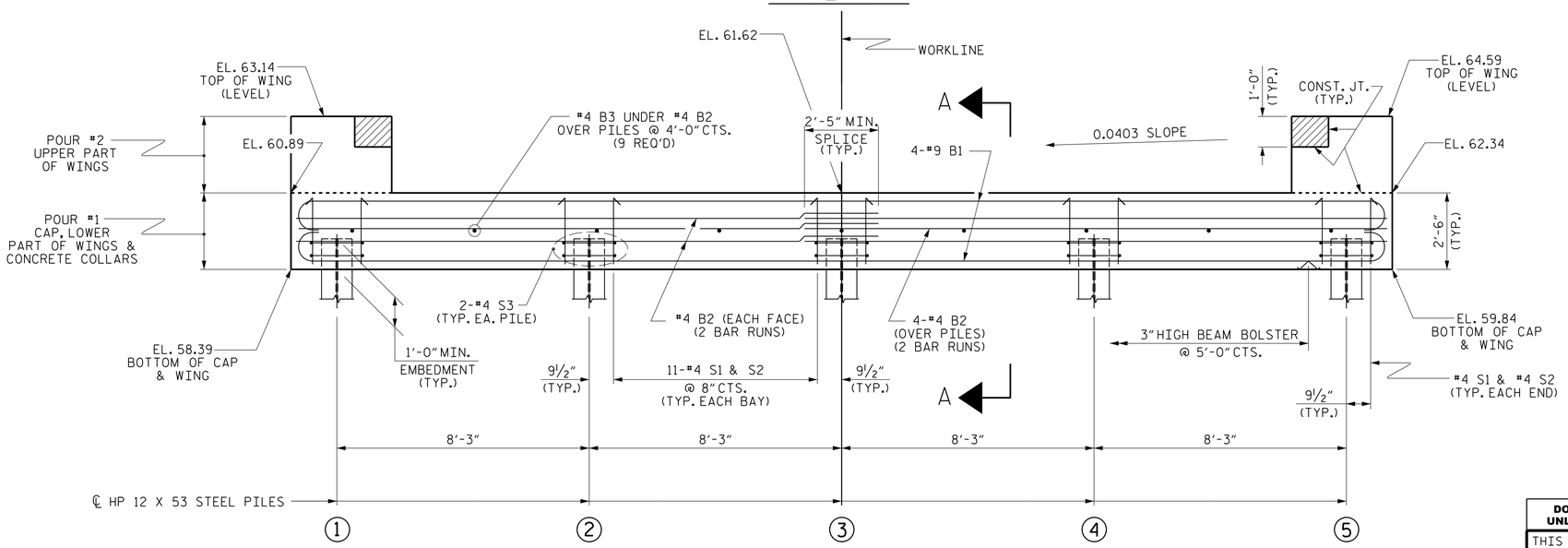

NOTES

STIRRUPS IN CAP MAY BE SHIFTED AS NECESSARY TO CLEAR DOWELS.

THE CONCRETE IN THE SHADED AREA OF THE WING SHALL BE POURED AFTER THE VERTICAL CONCRETE BARRIER RAIL IS CAST IF SLIP FORMING IS USED.

FOR PILE SPLICE DETAILS, SEE SHEET 4 OF 4.

FOR WING DETAILS, SEE SHEET 3 OF 4.

TOP OF PILE ELEVATIONS	
1	59.45
2	59.78
3	60.12
4	60.45
5	60.78

PROJECT NO. 17BP.4.R.66

EDGECOMBE COUNTY

STATION: 17+57.00 -L-

SHEET 1 OF 4

ELEVATION

WINGS NOT SHOWN FOR CLARITY.
FOR SECTION A-A, SEE SHEET 4 OF 4.
CONCRETE COLLARS FOR STEEL PILES NOT SHOWN IN PLAN AND ELEVATION VIEWS FOR CLARITY.
SEE "CORROSION PROTECTION FOR STEEL PILES DETAIL", SHEET 4 OF 4.

PLANS PREPARED BY:

CALYX ENGINEERS + CONSULTANTS
6750 TRYON ROAD
CARY, NC 27518
phone: 919.851.1912
CALYXengineers.com
NC License # F-1333

DOCUMENT NOT CONSIDERED FINAL UNLESS ALL SIGNATURES COMPLETED

THIS STANDARD DRAWING REVIEWED & ADOPTED FOR USE AT THE REFERENCED LOCATION BY THE UNDERSIGNED:

NORTH CAROLINA PROFESSIONAL ENGINEER SEAL L. KEVIN AUSTIN 19561
DocuSigned by: L. Kevin Austin
4/24/2018

STATE OF NORTH CAROLINA
DEPARTMENT OF TRANSPORTATION
RALEIGH

SUBSTRUCTURE

END BENT No. 1

REVISIONS						SHEET NO.
NO.	BY:	DATE:	NO.	BY:	DATE:	S-8
1			3			TOTAL SHEETS
2			4			16

ASSEMBLED BY : W. B. ALLEN		DATE : 1/17	
CHECKED BY : Z. H. BROWN		DATE : 3/17	
DRAWN BY : DGE	01/10	REV. 4/15	MAA/TMG
CHECKED BY : MKT	01/10		

STD. NO. EB_30_90S

NOTES

STIRRUPS IN CAP MAY BE SHIFTED AS NECESSARY TO CLEAR DOWELS.

THE CONCRETE IN THE SHADED AREA OF THE WING SHALL BE POURED AFTER THE VERTICAL CONCRETE BARRIER RAIL IS CAST IF SLIP FORMING IS USED.

FOR PILE SPLICE DETAILS, SEE SHEET 4 OF 4.

FOR WING DETAILS, SEE SHEET 3 OF 4.

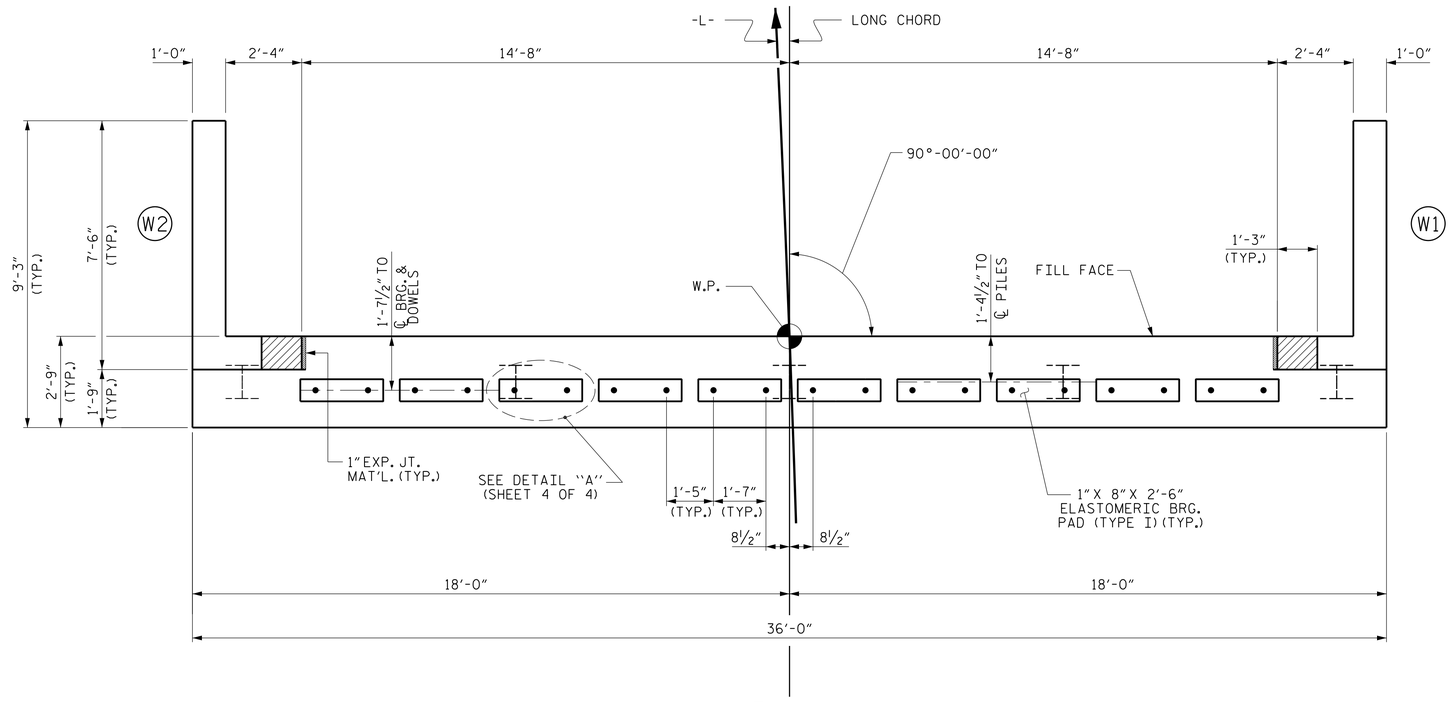

PLAN

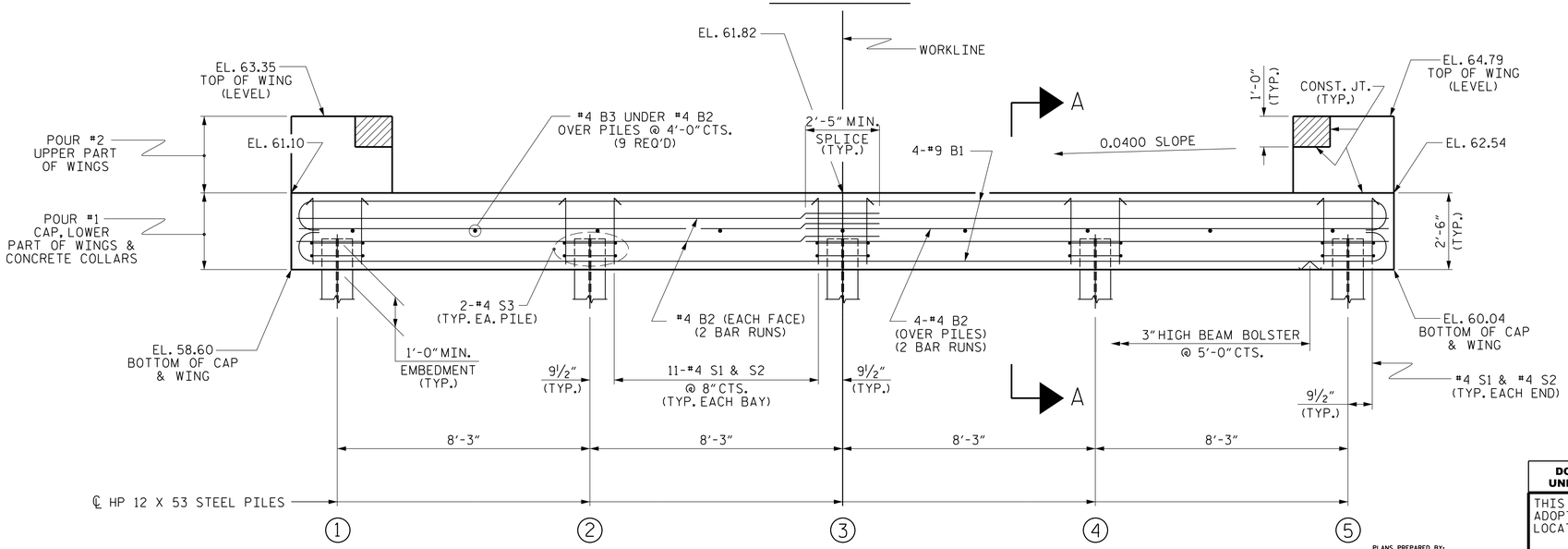

ELEVATION

WINGS NOT SHOWN FOR CLARITY.
FOR SECTION A-A, SEE SHEET 4 OF 4.
CONCRETE COLLARS FOR STEEL PILES NOT SHOWN IN PLAN AND ELEVATION VIEWS FOR CLARITY.
SEE "CORROSION PROTECTION FOR STEEL PILES DETAIL", SHEET 4 OF 4.

TOP OF PILE ELEVATIONS	
1	59.66
2	59.99
3	60.32
4	60.65
5	60.98

PROJECT NO. 17BP.4.R.66
EDGECOMBE COUNTY
STATION: 17+57.00 -L-

SHEET 2 OF 4

PLANS PREPARED BY:
CALYX ENGINEERS + CONSULTANTS
6750 TRYON ROAD
CARY, NC 27518
phone: 919.851.1912
CALYXengineers.com
NC License # F-1333

DOCUMENT NOT CONSIDERED FINAL UNLESS ALL SIGNATURES COMPLETED

THIS STANDARD DRAWING REVIEWED & ADOPTED FOR USE AT THE REFERENCED LOCATION BY THE UNDERSIGNED:

NORTH CAROLINA PROFESSIONAL SEAL 036 ENGINEER KEVIN AUSTIN
DocuSigned by: Kevin Austin
7221F6F28A9...
4/24/2018

STATE OF NORTH CAROLINA
DEPARTMENT OF TRANSPORTATION
RALEIGH

SUBSTRUCTURE

END BENT No. 2

REVISIONS						SHEET NO.
NO.	BY:	DATE:	NO.	BY:	DATE:	S-9
1			3			TOTAL SHEETS
2			4			16

STD. NO. EB_30_90S

ASSEMBLED BY : W. B. ALLEN		DATE : 1/17	
CHECKED BY : Z. H. BROWN		DATE : 3/17	
DRAWN BY : DGE	01/10	REV. 4/15	MAA/TMG
CHECKED BY : MKT	01/10		

5/10/2017 8:47:14 AM R:\Structures\17BP.4.R.66_SMU_E2_02.dgn

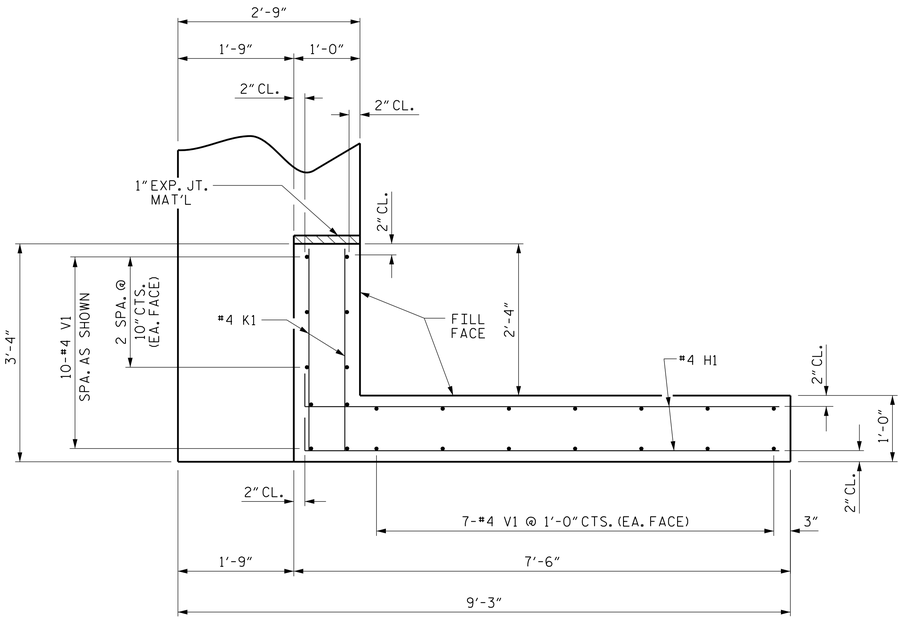

PLAN OF WING (W1)

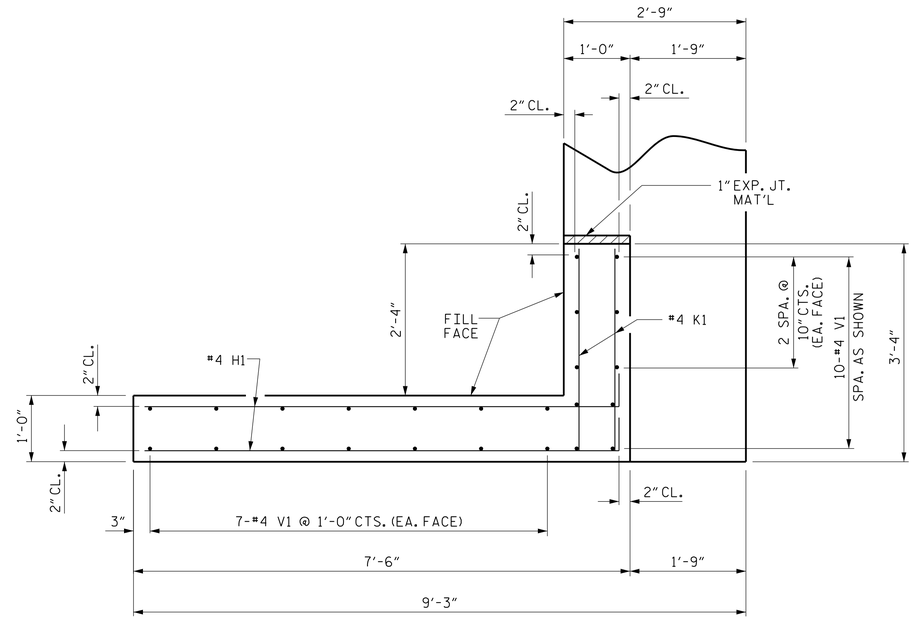

PLAN OF WING (W2)

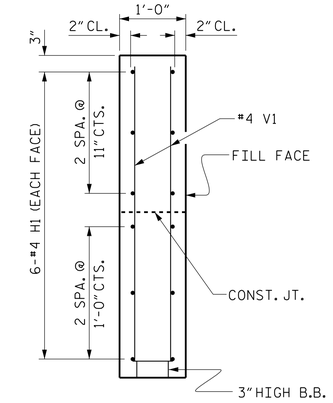

SECTION X-X

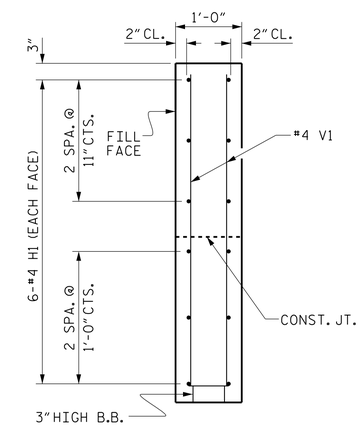

SECTION Y-Y

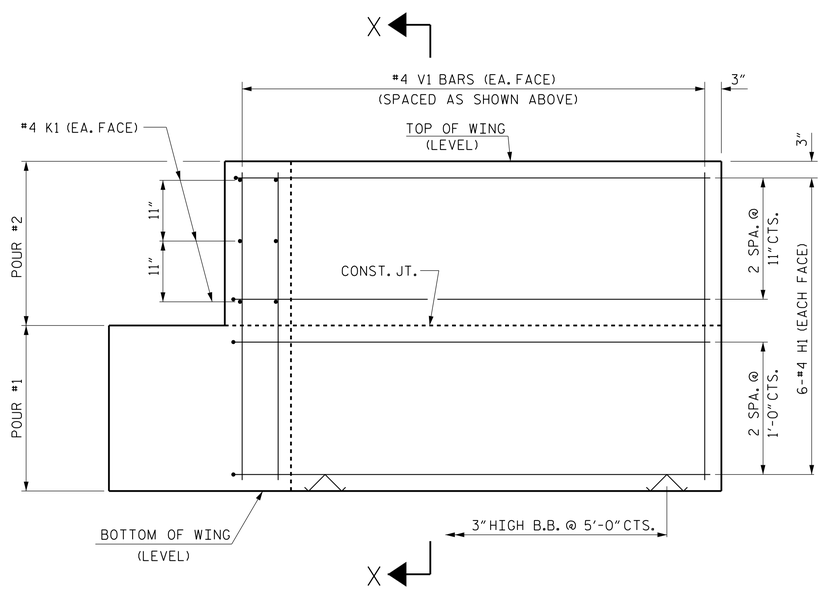

ELEVATION OF WING (W1)

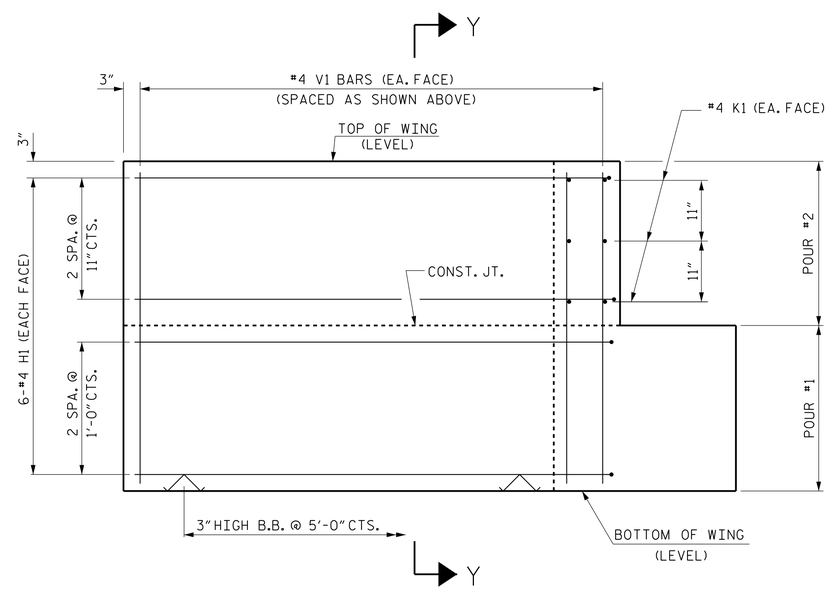

ELEVATION OF WING (W2)

WING DETAILS

PROJECT NO. 17BP.4.R.66

EDGECOMBE COUNTY

STATION: 17+57.00 -L-

SHEET 3 OF 4

PLANS PREPARED BY:

CALYX ENGINEERS + CONSULTANTS
6750 TRYON ROAD
CARY, NC 27518
phone: 919.851.1912
CALYXengineers.com
NC License # F-1333

DOCUMENT NOT CONSIDERED FINAL UNLESS ALL SIGNATURES COMPLETED

THIS STANDARD DRAWING REVIEWED & ADOPTED FOR USE AT THE REFERENCED LOCATION BY THE UNDERSIGNED:

NORTH CAROLINA PROFESSIONAL ENGINEER SEAL 036661 L. KEVIN AUSTIN
Docusigned by: L. Kevin Austin 7287B37206D4DAB...
4/24/2018

STATE OF NORTH CAROLINA
DEPARTMENT OF TRANSPORTATION
RALEIGH

SUBSTRUCTURE

END BENT
WING DETAILS

REVISIONS						SHEET NO.
NO.	BY:	DATE:	NO.	BY:	DATE:	S-10
1			3			TOTAL SHEETS
2			4			16

STD. NO. EB_30_90S

ASSEMBLED BY : W. B. ALLEN		DATE : 1/17	
CHECKED BY : Z. H. BROWN		DATE : 3/17	
DRAWN BY : DGE	02/10	REV. 4/15	MAA/TMG
CHECKED BY : MKT	02/10		

5/10/2017 8:47:46 AM R:\Structures\17BP.4.R.66_SMU_EB2_03.dgn

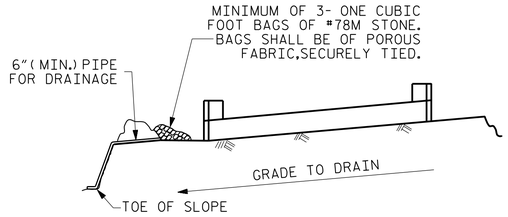

BAGGED STONE AND PIPE SHALL BE PLACED IMMEDIATELY AFTER COMPLETION OF END BENT EXCAVATION. PIPE MAY BE EITHER CONCRETE, CORRUGATED STEEL, CORRUGATED ALUMINUM ALLOY, OR CORRUGATED PLASTIC. PERFORATED PIPE WILL NOT BE ALLOWED.

BAGGED STONE SHALL REMAIN IN PLACE UNTIL THE ENGINEER DIRECTS THAT IT BE REMOVED. THE CONTRACTOR SHALL REMOVE AND DISPOSE OF SILT ACCUMULATIONS AT BAGGED STONE WHEN SO DIRECTED BY THE ENGINEER. BAGS SHALL BE REMOVED AND REPLACED WHENEVER THE ENGINEER DETERMINES THAT THEY HAVE DETERIORATED AND LOST THEIR EFFECTIVENESS.

NO SEPARATE PAYMENT WILL BE MADE FOR THIS WORK AND THE ENTIRE COST OF THIS WORK SHALL BE INCLUDED IN THE UNIT CONTRACT PRICE BID FOR THE SEVERAL PAY ITEMS.

TEMPORARY DRAINAGE AT END BENT

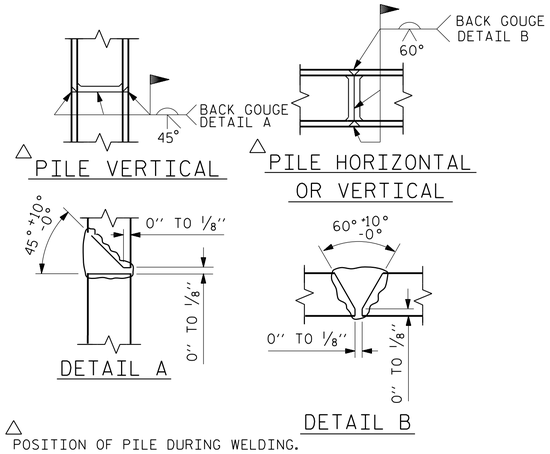

△ POSITION OF PILE DURING WELDING.

PILE SPLICE DETAILS

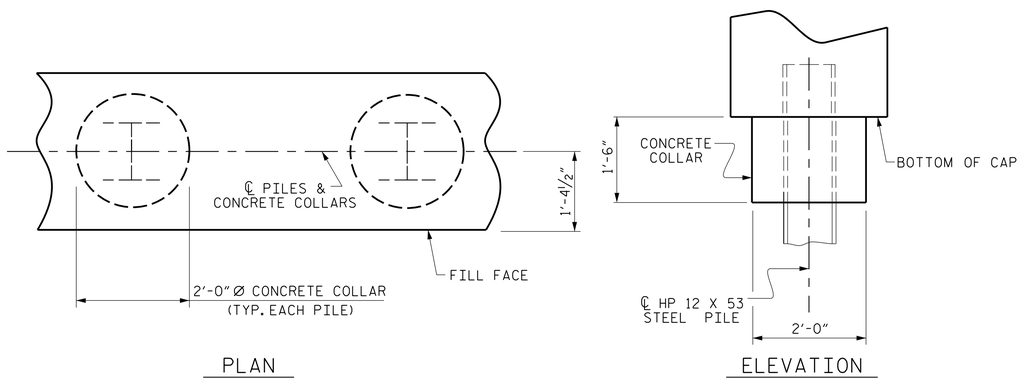

CORROSION PROTECTION FOR STEEL PILES DETAIL

(END BENT No. 1 SHOWN, END BENT No. 2 SIMILAR BY ROTATION)

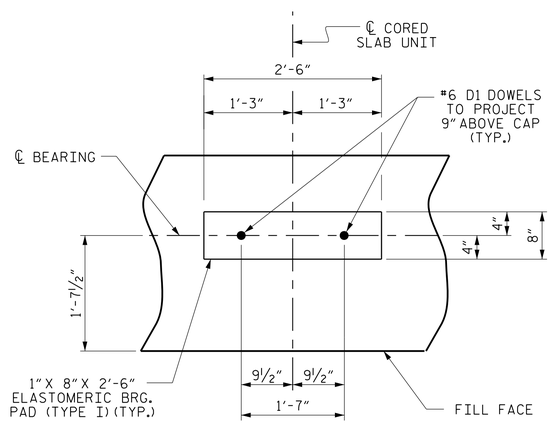

DETAIL "A"

(END BENT No. 1 SHOWN, END BENT No. 2 SIMILAR BY ROTATION)

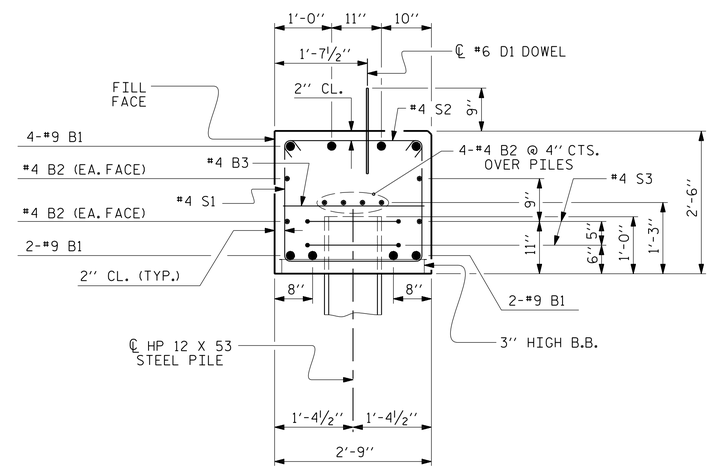

SECTION A-A

(CONCRETE COLLAR NOT SHOWN FOR CLARITY. SEE "CORROSION PROTECTION FOR STEEL PILES DETAIL.")

BAR TYPES

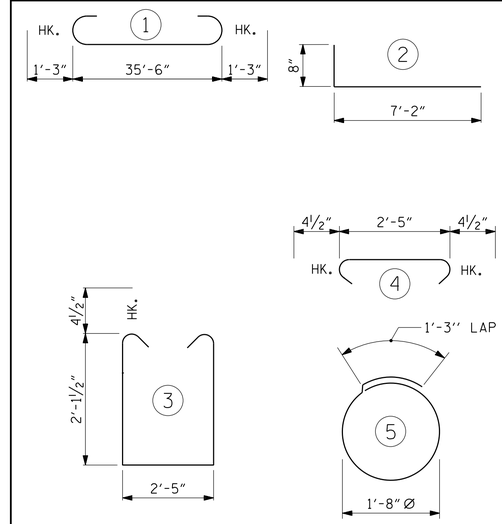

ALL BAR DIMENSIONS ARE OUT TO OUT.

END BENT No. 1	END BENT No. 2
HP 12 X 53 STEEL PILES NO: 5 LIN. FT.= 275	HP 12 X 53 STEEL PILES NO: 5 LIN. FT.= 275
PILE DRIVING EQUIPMENT SETUP FOR HP 12 X 53 STEEL PILES NO: 5	PILE DRIVING EQUIPMENT SETUP FOR HP 12 X 53 STEEL PILES NO: 5
PILE REDRIVES NO: 3	PILE REDRIVES NO: 2

BILL OF MATERIAL
FOR ONE END BENT

BAR	NO.	SIZE	TYPE	LENGTH	WEIGHT
B1	8	#9	1	38'-0"	1034
B2	16	#4	STR	19'-1"	204
B3	9	#4	STR	2'-5"	15
D1	20	#6	STR	1'-6"	45
H1	24	#4	2	7'-10"	126
K1	12	#4	STR	2'-11"	23
S1	46	#4	3	7'-5"	228
S2	46	#4	4	3'-2"	97
S3	10	#4	5	6'-6"	43
V1	48	#4	STR	4'-5"	142

REINFORCING STEEL (FOR ONE END BENT) 1957 LBS.

CLASS A CONCRETE BREAKDOWN (FOR ONE END BENT)

POUR #1 CAP, LOWER PART OF WINGS & COLLARS 11.2 C.Y.

POUR #2 UPPER PART OF WINGS 1.6 C.Y.

TOTAL CLASS A CONCRETE 12.8 C.Y.

PROJECT NO. 17BP.4.R.66

EDGECOMBE COUNTY

STATION: 17+57.00 -L-

SHEET 4 OF 4

PLANS PREPARED BY:

CALYX ENGINEERS + CONSULTANTS
6750 TRYON ROAD
CARY, NC 27518
phone: 919.851.1912
CALYXengineers.com
NC License # F-1333

DOCUMENT NOT CONSIDERED FINAL UNLESS ALL SIGNATURES COMPLETED

THIS STANDARD DRAWING REVIEWED & ADOPTED FOR USE AT THE REFERENCED LOCATION BY THE UNDERSIGNED:

NORTH CAROLINA PROFESSIONAL SEAL ENGINEER L. KEVIN AUSTIN 036811
Docu Signed by: L. Kevin Austin 4/24/2018

STATE OF NORTH CAROLINA
DEPARTMENT OF TRANSPORTATION
RALEIGH

SUBSTRUCTURE

END BENT No. 1 & 2 DETAILS

REVISIONS						SHEET NO.
NO.	BY:	DATE:	NO.	BY:	DATE:	S-11
1			3			TOTAL SHEETS
2			4			16

STD. NO. EB_30_90S

ASSEMBLED BY : W. B. ALLEN		DATE : 1/17	
CHECKED BY : Z. H. BROWN		DATE : 3/17	
DRAWN BY : DGE	12/09	REV. 4/17	MAA/THC
CHECKED BY : MKT	01/10		

5/10/2017 8:47:18 AM R:\Structures\17BP.4.R.66_SMU_E1&E2_04.dgn

NOTES

STIRRUPS IN CAP MAY BE SHIFTED AS NECESSARY TO CLEAR DOWELS.

★ INVERT ALTERNATE STIRRUPS.

GALVANIZE THE TOP OF EACH INTERIOR BENT PILE A MINIMUM OF 30 FEET. GALVANIZE IN ACCORDANCE WITH SECTION 1076 OF THE STANDARD SPECIFICATIONS.

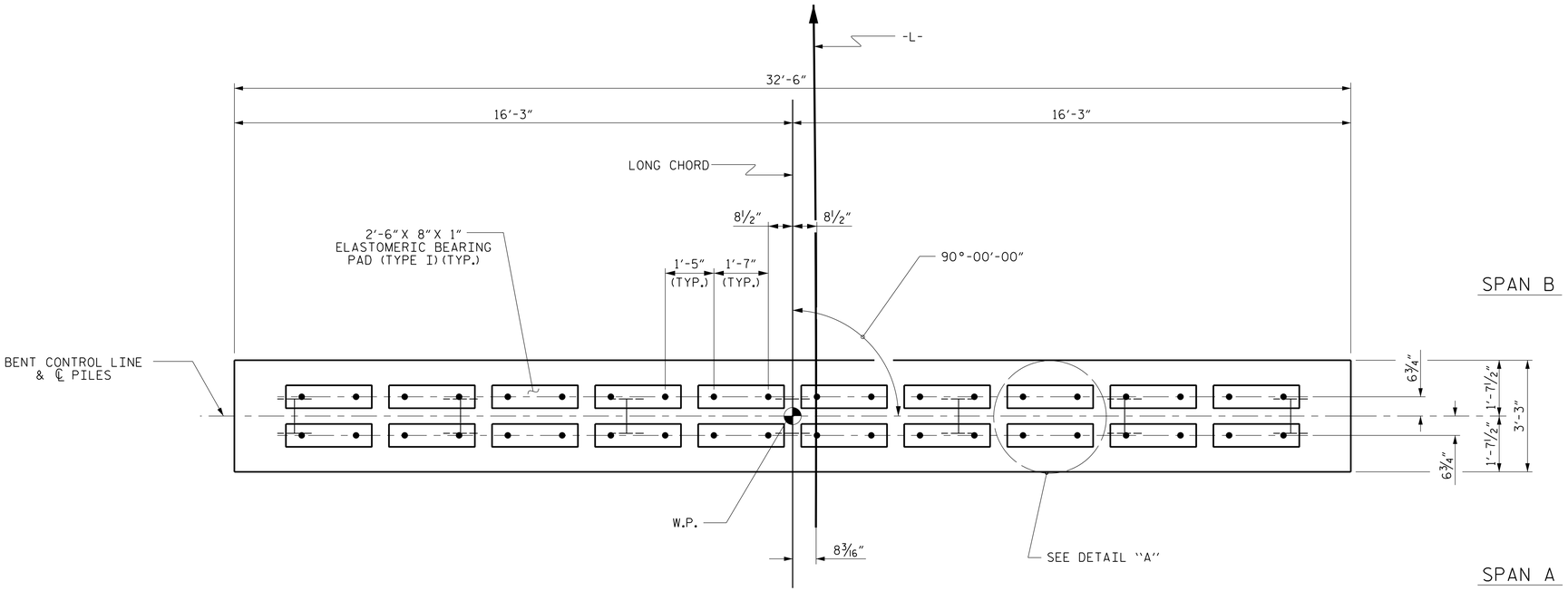

PLAN

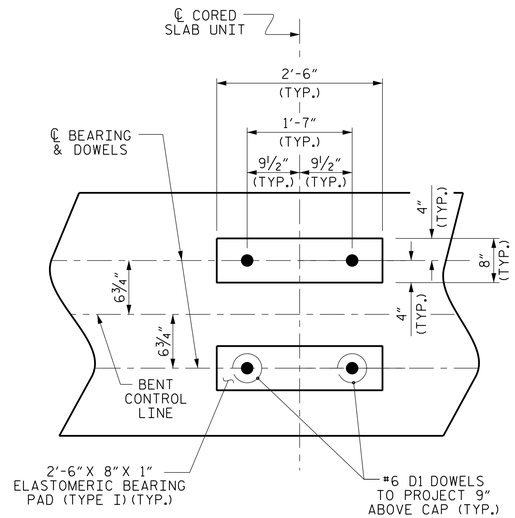

DETAIL "A"

(DIMENSIONS ARE TYPICAL EACH BEARING)

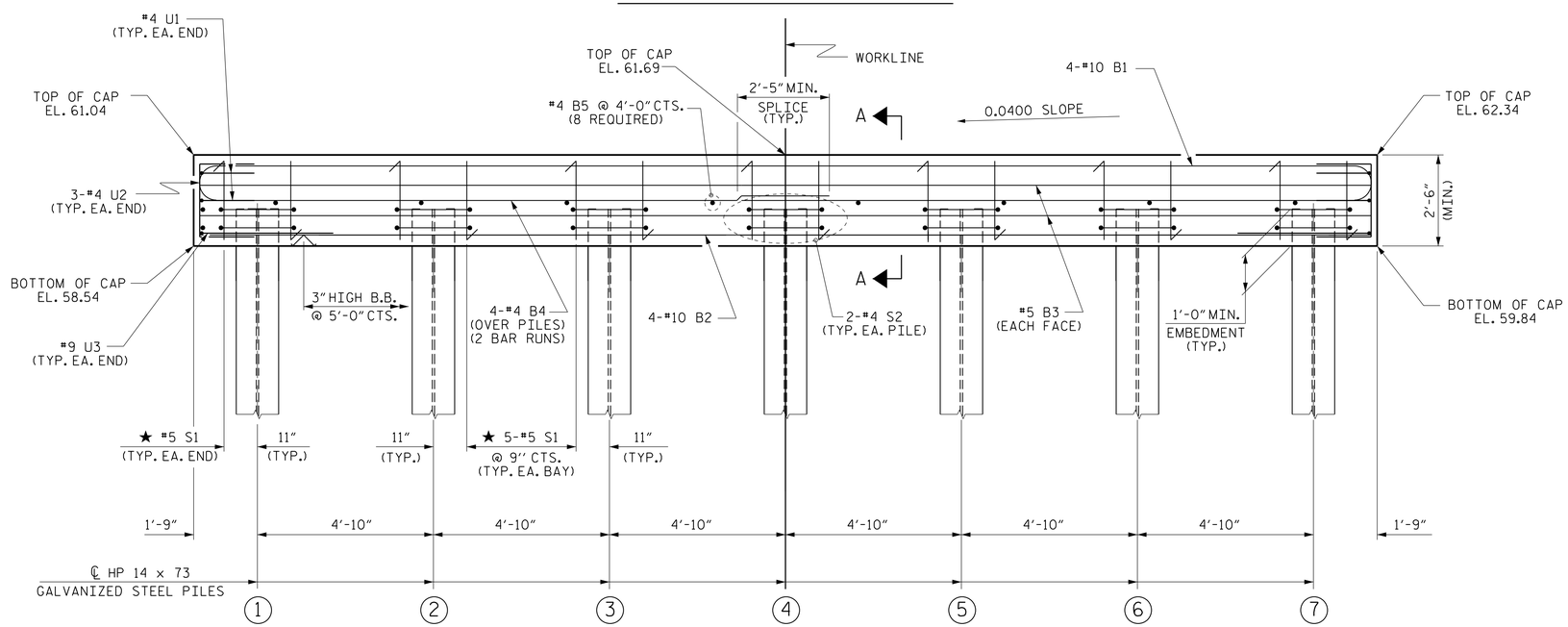

ELEVATION

FOR SECTION A-A, SEE SHEET 2 OF 2

TOP OF PILE ELEVATIONS

1	59.59
2	59.78
3	59.97
4	60.17
5	60.36
6	60.55
7	60.75

PROJECT NO. 17BP.4.R.66

EDGECOMBE COUNTY

STATION: 17+57.00 -L-

SHEET 1 OF 2

STATE OF NORTH CAROLINA
DEPARTMENT OF TRANSPORTATION
RALEIGH

SUBSTRUCTURE

BENT No. 1

PLANS PREPARED BY:

CALYX ENGINEERS + CONSULTANTS
6750 TRYON ROAD
CARY, NC 27518
phone: 919.851.1912
CALYXengineers.com
NC License # F-1333

DOCUMENT NOT CONSIDERED FINAL UNLESS ALL SIGNATURES COMPLETED

THIS STANDARD DRAWING REVIEWED & ADOPTED FOR USE AT THE REFERENCED LOCATION BY THE UNDERSIGNED:

NORTH CAROLINA PROFESSIONAL SEAL ENGINEER KEVIN AUSTIN 036

DocuSigned by: K. Kevin Austin
4/24/2018

REVISIONS							SHEET NO.
NO.	BY:	DATE:	NO.	BY:	DATE:		S-12
1			3				TOTAL SHEETS
2			4				16

ASSEMBLED BY :	W. B. ALLEN	DATE :	3/17
CHECKED BY :	Z. H. BROWN	DATE :	3/17
DRAWN BY :	DGE	05/10	
CHECKED BY :	MKT	05/10	

5/10/2017 8:47:09 AM R:\Structures\17BP.4.R.66_SMU_BL01.dgn

STD. NO. 14" HP_BT_30_90S_<60'

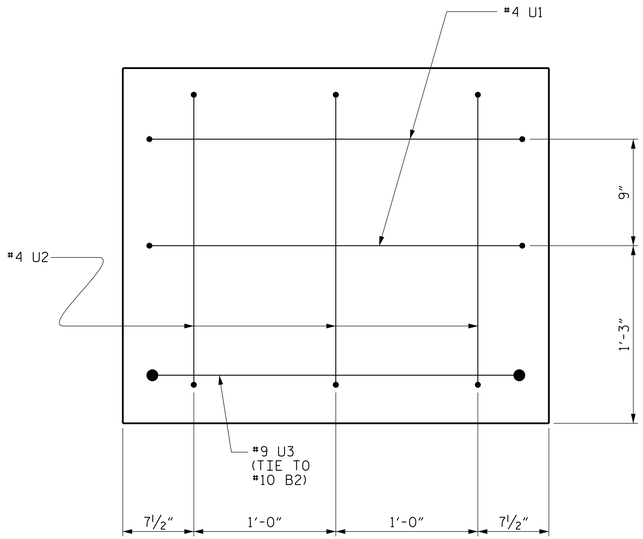

END OF CAP VIEW

(TYPICAL BOTH ENDS)

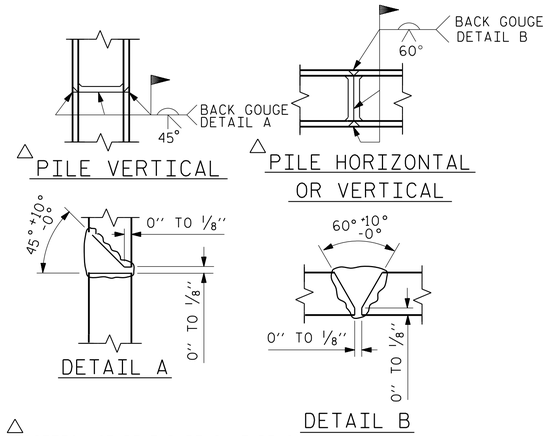

△ POSITION OF PILE DURING WELDING.

PILE SPLICE DETAILS

BAR TYPES

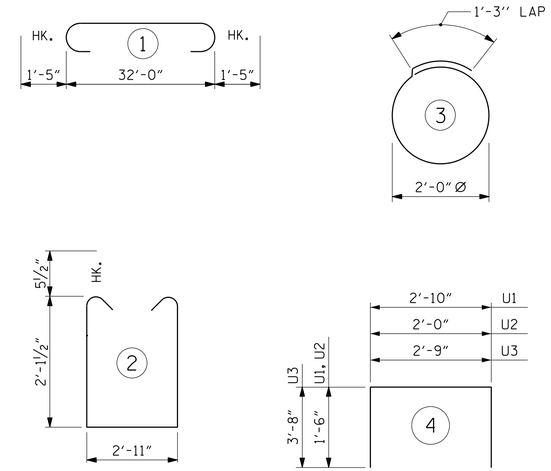

ALL BAR DIMENSIONS ARE OUT TO OUT.

BILL OF MATERIAL FOR ONE BENT

BAR	NO.	SIZE	TYPE	LENGTH	WEIGHT
B1	4	#10	1	34'-10"	600
B2	4	#10	STR	32'-2"	554
B3	4	#5	STR	32'-2"	134
B4	8	#4	STR	17'-4"	93
B5	8	#4	STR	2'-11"	16
D1	40	#6	STR	1'-6"	90
S1	32	#5	2	8'-1"	270
S2	14	#4	3	7'-7"	71
U1	4	#4	4	5'-10"	16
U2	6	#4	4	5'-0"	20
U3	2	#9	4	10'-1"	69

REINFORCING STEEL (FOR ONE BENT) 1933 LBS

CLASS A CONCRETE BREAKDOWN (FOR ONE BENT)

TOTAL CLASS A CONCRETE 9.8 C.Y.

HP 14 X 73 GALVANIZED STEEL PILES (FOR ONE BENT)

No. 7 LIN. FT. 455

PILE DRIVING EQUIPMENT SETUP FOR HP 14 X 73 GALVANIZED STEEL PILES (FOR ONE BENT) NO: 7

PILE REDRIVES NO: 4

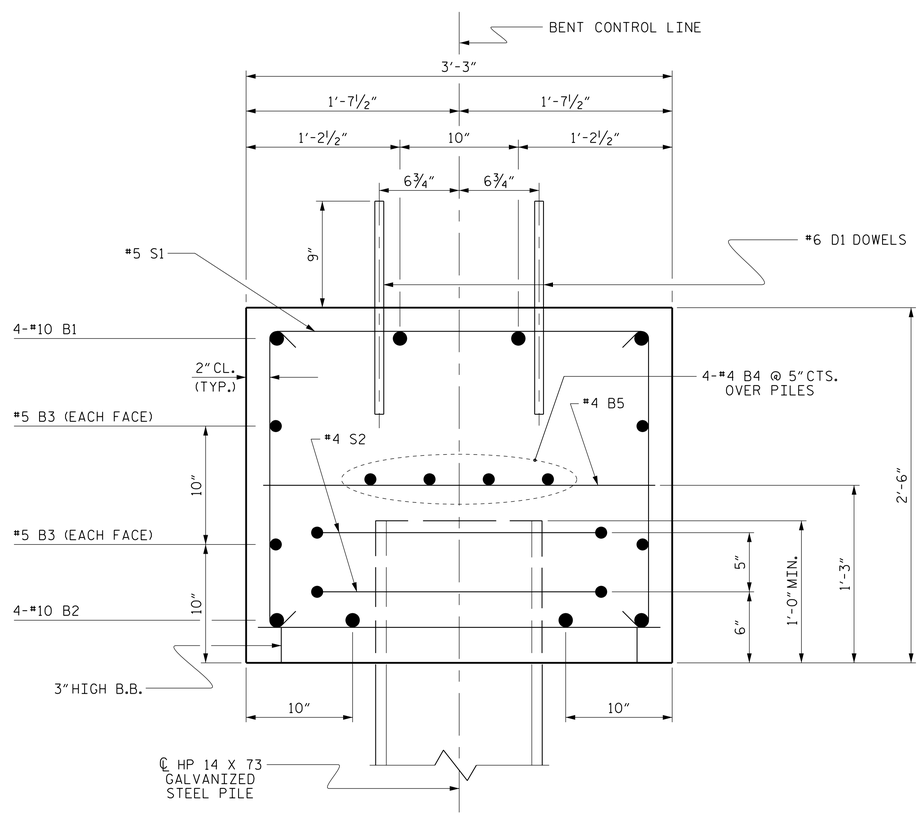

SECTION A-A

PROJECT NO. 17BP.4.R.66

EDGECOMBE COUNTY

STATION: 17+57.00 -L-

SHEET 2 OF 2

STATE OF NORTH CAROLINA
DEPARTMENT OF TRANSPORTATION
RALEIGH

SUBSTRUCTURE

BENT No. 1

REVISIONS						SHEET NO.
NO.	BY:	DATE:	NO.	BY:	DATE:	S-13
1			3			TOTAL SHEETS
2			4			16

DOCUMENT NOT CONSIDERED FINAL UNLESS ALL SIGNATURES COMPLETED

THIS STANDARD DRAWING REVIEWED & ADOPTED FOR USE AT THE REFERENCED LOCATION BY THE UNDERSIGNED:

NORTH CAROLINA PROFESSIONAL SEAL 19681 ENGINEER L. KEVIN AUSTIN
DocuSigned by: L. Kevin Austin
4/24/2018

PLANS PREPARED BY:
CALYX ENGINEERS + CONSULTANTS
6750 TRYON ROAD
CARY, NC 27518
phone: 919.851.1912
CALYXengineers.com
NC License # F-1333

DRAWN BY :	W. B. ALLEN	DATE :	3/17
CHECKED BY :	Z. H. BROWN	DATE :	3/17
DRAWN BY : DGE 05/10	REV. 4/17	MAA/THC	
CHECKED BY : MKT 05/10			

5/10/2017 8:47:21 AM R:\Structures\17BP.4.R.66_SMU_BL02.dgn

STD. NO. 14" HP_BT_30_90S_<60'

NOTES :

FOR BERM WIDTH DIMENSIONS, SEE GENERAL DRAWING.

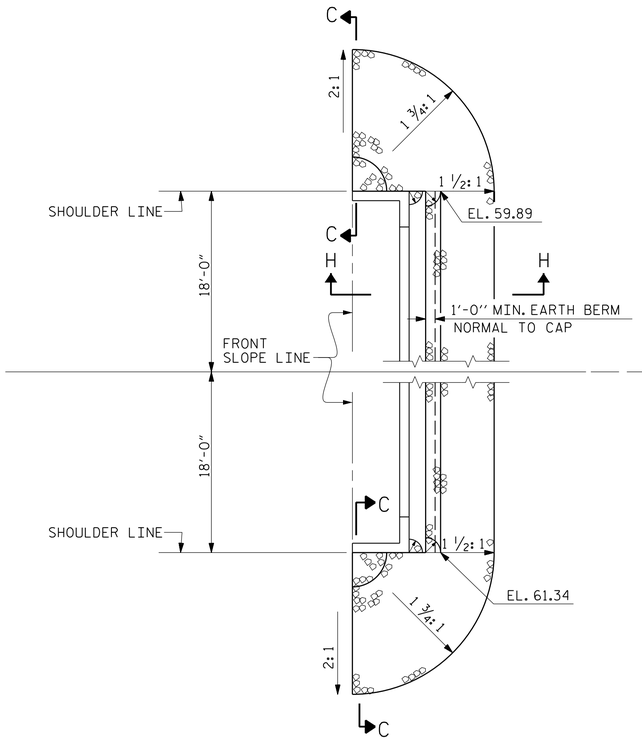

END BENT 1

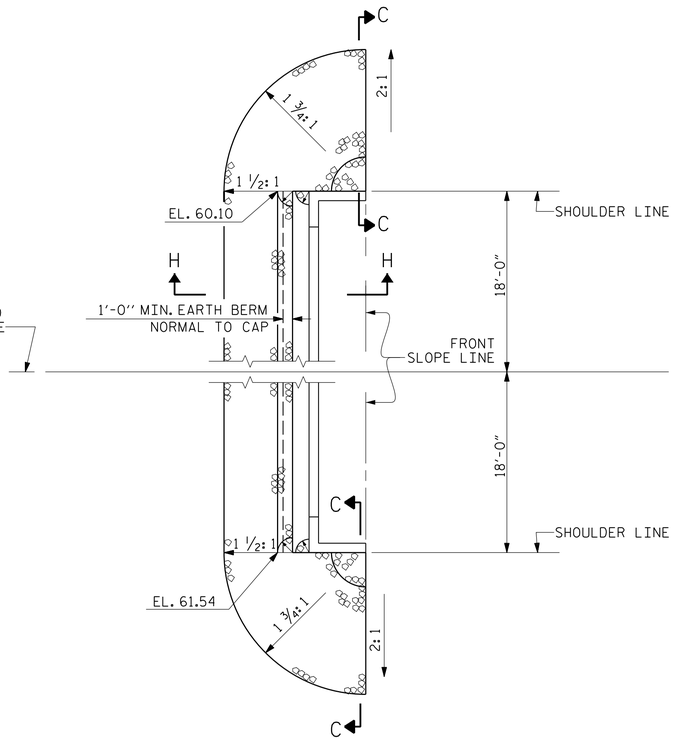

END BENT 2

LONG CHORD
& WORKLINE

SHOULDER RIP RAP IS HIGHER THAN BERM RIP RAP

ESTIMATED QUANTITIES		
BRIDGE @ STA. 17+57.00 -L-	RIP RAP CLASS II (2'-0" THICK)	GEOTEXTILE FOR DRAINAGE
	TONS	SQUARE YARDS
END BENT 1	43	48
END BENT 2	38	42

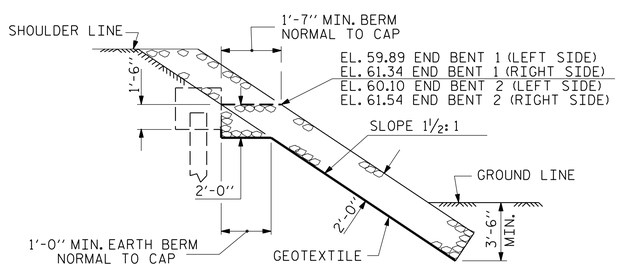

SECTION H-H

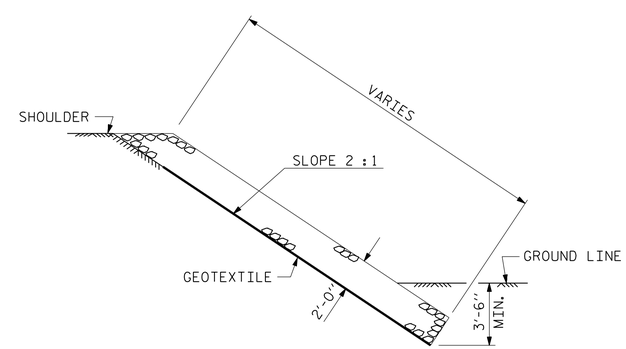

SECTION C-C

PROJECT NO. 17BP.4.R.66

EDGECOMBE COUNTY

STATION: 17+57.00 -L-

PLANS PREPARED BY:

CALYX ENGINEERS + CONSULTANTS

6750 TRYON ROAD
CARY, NC 27518
phone: 919.851.1912
CALYXengineers.com

NC License # F-1333

DOCUMENT NOT CONSIDERED FINAL UNLESS ALL SIGNATURES COMPLETED

THIS STANDARD DRAWING REVIEWED & ADOPTED FOR USE AT THE REFERENCED LOCATION BY THE UNDERSIGNED:

NORTH CAROLINA PROFESSIONAL SEAL 19661 ENGINEER L. KEVIN AUSTIN

Docu Signed by: L. Kevin Austin 7/24/2018 10:04:24 AM PDT

4/24/2018

STATE OF NORTH CAROLINA
DEPARTMENT OF TRANSPORTATION
RALEIGH

STANDARD

RIP RAP DETAILS

REVISIONS						SHEET NO.
NO.	BY:	DATE:	NO.	BY:	DATE:	S-14
1			3			TOTAL SHEETS
2			4			16

STD. NO. RR1

ASSEMBLED BY : W. B. ALLEN	DATE : 2/17		
CHECKED BY : Z. H. BROWN	DATE : 2/17		
DRAWN BY : REK 1/84	REV. 5/1/06R	TLA/GM	
CHECKED BY : RDU 1/84	REV. 10/1/11	MAA/GM	
	REV. 12/21/11	MAA/GM	

5/10/2017 8:47:23 AM R:\Structures\17BP.4.R.66_SMU_RR_0.dgn

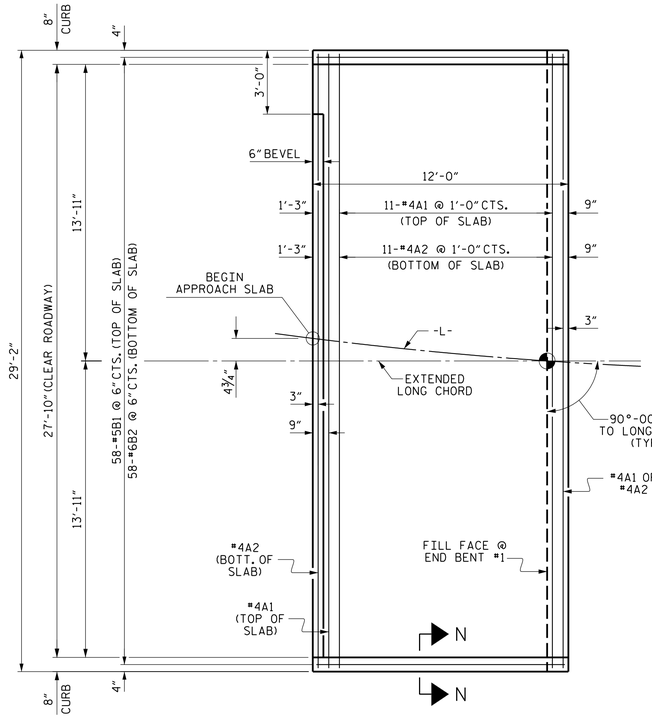

PLAN @ END BENT #1

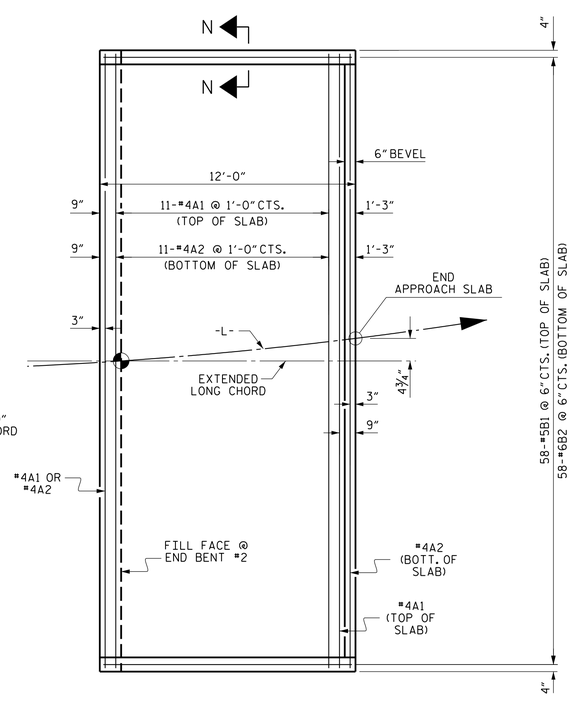

PLAN @ END BENT #2

DIMENSIONS SHOWN ARE TYPICAL FOR BOTH APPROACH SLABS

NOTES

FOR BRIDGE APPROACH FILL INCLUDING GEOTEXTILE, 4" Ø DRAINAGE PIPE, AND SELECT MATERIAL BACKFILL, SEE ROADWAY PLANS.

GEOTEXTILE SHALL BE TYPE 1 IN ACCORDANCE WITH THE STANDARD SPECIFICATIONS SECTION 1056.

SELECT MATERIAL BACKFILL (CLASS V OR CLASS VI) SHALL BE IN ACCORDANCE WITH STANDARD SPECIFICATIONS SECTION 1016.

SELECT MATERIAL BACKFILL IS TO BE CONTINUOUS ALONG FILL FACE OF BACKWALL FROM OUTSIDE EDGE TO OUTSIDE EDGE OF APPROACH SLAB.

FOR THE 4" Ø DRAINAGE PIPE OUTLET(S), SEE ROADWAY STANDARD DRAWINGS.

AREA BETWEEN THE WINGWALL AND APPROACH SLAB SHALL BE GRADED TO DRAIN THE WATER AWAY FROM THE FILL FACE OF THE BRIDGE AND SHALL BE PAVED. SEE ROADWAY PLANS.

APPROACH SLAB GROOVING IS NOT REQUIRED.

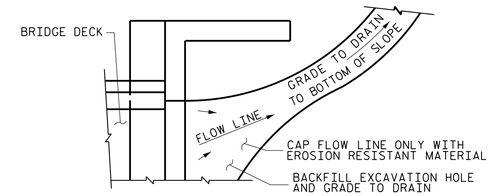

NOTE: IF THE APPROACH SLAB IS NOT CONSTRUCTED IMMEDIATELY AFTER THE BACKFILLING OF THE END BENT EXCAVATION, GRADE TO DRAIN TO THE BOTTOM OF THE SLOPE AND PROVIDE EROSION RESISTANT MATERIAL, SUCH AS FIBERGLASS ROVING OR AS DIRECTED BY THE ENGINEER TO PREVENT SOIL EROSION AND TO PROTECT THE AREA ADJACENT TO THE STRUCTURE. THE CONTRACTOR WILL BE REQUIRED TO REMOVE THESE MATERIALS PRIOR TO CONSTRUCTION OF THE APPROACH SLAB.

BILL OF MATERIAL

APPROACH SLAB AT EB #1

BAR	NO.	SIZE	TYPE	LENGTH	WEIGHT
* A1	13	#4	STR	28'-10"	250
A2	13	#4	STR	28'-10"	250
* B1	58	#5	STR	11'-2"	676
B2	58	#6	STR	11'-8"	1016
REINFORCING STEEL				LBS.	1266
* EPOXY COATED REINFORCING STEEL				LBS.	926
CLASS AA CONCRETE				C. Y.	15.9

APPROACH SLAB AT EB #2

BAR	NO.	SIZE	TYPE	LENGTH	WEIGHT
* A1	13	#4	STR	28'-10"	250
A2	13	#4	STR	28'-10"	250
* B1	58	#5	STR	11'-2"	676
B2	58	#6	STR	11'-8"	1016
REINFORCING STEEL				LBS.	1266
* EPOXY COATED REINFORCING STEEL				LBS.	926
CLASS AA CONCRETE				C. Y.	15.9

TEMPORARY DRAINAGE DETAIL

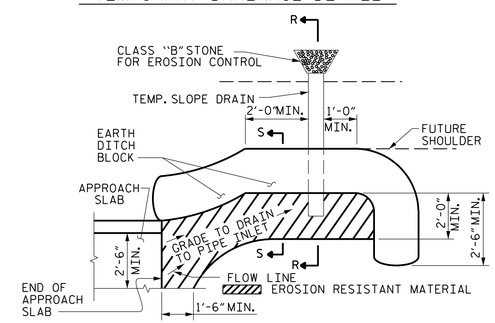

NOTE: IMMEDIATELY AFTER THE CONSTRUCTION OF THE APPROACH SLAB, THE CONTRACTOR SHALL PROVIDE TEMPORARY BERM AND SLOPE DRAIN. CONTRACTOR SHALL GRADE TO PIPE INLET AND PROVIDE EROSION RESISTANT MATERIAL AS SHOWN. THE EROSION RESISTANT MATERIAL SHALL BE EITHER 1) ASPHALT PLANT MIX, TYPE 1 OR TYPE 2, MIN. 2" DEPTH, 2) EROSION CONTROL MAT, OR 3) CONCRETE, AS DIRECTED BY THE ENGINEER. THE SLOPE DRAIN SHALL CONSIST OF A NON-PERFORATED TEMPORARY DRAINAGE PIPE, 12 INCHES IN DIAMETER.

PLAN VIEW

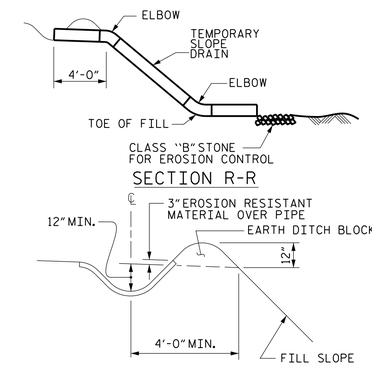

SECTION R-R

SECTION S-S

TEMPORARY BERM AND SLOPE DRAIN DETAILS

(TO BE USED WHEN SHOULDER BERM GUTTER IS REQUIRED)

SPLICE LENGTHS		
BAR SIZE	EPOXY COATED	UNCOATED
#4	2'-0"	1'-9"
#5	2'-6"	2'-2"
#6	3'-10"	2'-7"

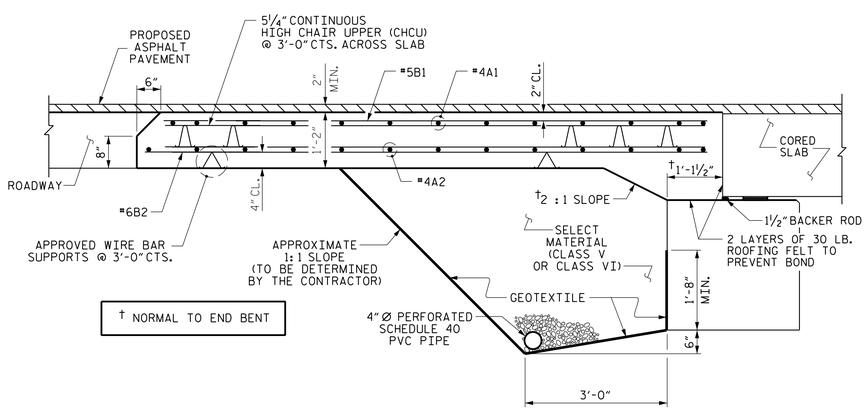

† NORMAL TO END BENT

SECTION THRU SLAB

(TYPE II - MODIFIED APPROACH FILL)

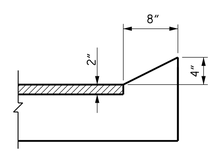

SECTION N-N

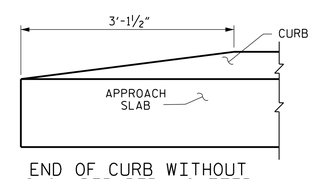

END OF CURB WITHOUT SHOULDER BERM GUTTER

CURB DETAILS

PROJECT NO. 17BP.4.R.66

EDGECOMBE COUNTY

STATION: 17+57.00 -L-

PLANS PREPARED BY:

CALYX ENGINEERS + CONSULTANTS

6750 TRYON ROAD
CARY, NC 27518
phone: 919.851.1912
CALYXengineers.com

NC License # F-1333

DOCUMENT NOT CONSIDERED FINAL UNLESS ALL SIGNATURES COMPLETED

THIS STANDARD DRAWING REVIEWED & ADOPTED FOR USE AT THE REFERENCED LOCATION BY THE UNDERSIGNED:

NORTH CAROLINA PROFESSIONAL ENGINEER SEAL 036 KEVIN AUSTIN

DocuSigned by: L. Kevin Austin 7221B3720EA4DBE...

4/24/2018

STATE OF NORTH CAROLINA
DEPARTMENT OF TRANSPORTATION
RALEIGH

STANDARD
BRIDGE APPROACH SLAB
FOR PRESTRESSED CONCRETE
CORED SLAB UNIT
(SUB-REGIONAL TIER)
90° SKEW

REVISIONS						SHEET NO.
NO.	BY:	DATE:	NO.	BY:	DATE:	S-15
1			3			TOTAL SHEETS
2			4			16

ASSEMBLED BY :	W. B. ALLEN	DATE :	2/18
CHECKED BY :	Z. H. BROWN	DATE :	2/18
DRAWN BY : SHS/MAA 5-09	REV. 12-17	MAA/THC	
CHECKED BY : BCH 5-09			

3/13/2018 8:06:58 AM R:\Structures\17BP.4.R.66_SMU_AS_0.dgn

STANDARD NOTES

DESIGN DATA:

SPECIFICATIONS	A.A.S.H.T.O. (CURRENT)
LIVE LOAD	SEE PLANS
IMPACT ALLOWANCE	SEE A.A.S.H.T.O.
STRESS IN EXTREME FIBER OF STRUCTURAL STEEL - AASHTO M270 GRADE 36	20,000 LBS. PER SQ. IN.
- AASHTO M270 GRADE 50W	27,000 LBS. PER SQ. IN.
- AASHTO M270 GRADE 50	27,000 LBS. PER SQ. IN.
REINFORCING STEEL IN TENSION - GRADE 60	24,000 LBS. PER SQ. IN.
CONCRETE IN COMPRESSION	1,200 LBS. PER SQ. IN.
CONCRETE IN SHEAR	SEE A.A.S.H.T.O.
STRUCTURAL TIMBER - TREATED OR UNTREATED EXTREME FIBER STRESS	1,800 LBS. PER SQ. IN.
COMPRESSION PERPENDICULAR TO GRAIN OF TIMBER	375 LBS. PER SQ. IN.
EQUIVALENT FLUID PRESSURE OF EARTH	30 LBS. PER CU. FT. (MINIMUM)

MATERIAL AND WORKMANSHIP:

EXCEPT AS MAY OTHERWISE BE SPECIFIED ON PLANS OR IN THE SPECIAL PROVISIONS, ALL MATERIAL AND WORKMANSHIP SHALL BE IN ACCORDANCE WITH THE 2018 "STANDARD SPECIFICATIONS FOR ROADS AND STRUCTURES" OF THE N. C. DEPARTMENT OF TRANSPORTATION.

STEEL SHEET PILING FOR PERMANENT OR TEMPORARY APPLICATIONS SHALL BE HOT ROLLED.

CONCRETE:

UNLESS OTHERWISE REQUIRED ON PLANS, CLASS A CONCRETE SHALL BE USED FOR ALL PORTIONS OF ALL STRUCTURES WITH THE EXCEPTION THAT: CLASS AA CONCRETE SHALL BE USED IN BRIDGE SUPERSTRUCTURES, ABUTMENT BACKWALLS, AND APPROACH SLABS; AND CLASS B CONCRETE SHALL BE USED FOR SLOPE PROTECTION AND RIP RAP.

CONCRETE CHAMFERS:

UNLESS OTHERWISE NOTED ON THE PLANS, ALL EXPOSED CORNERS ON STRUCTURES SHALL BE CHAMFERED ¾" WITH THE FOLLOWING EXCEPTIONS: TOP CORNERS OF CURBS MAY BE ROUNDED TO 1½" RADIUS WHICH IS BUILT INTO CURB FORMS; CORNERS OF TRANSVERSE FLOOR EXPANSION JOINTS SHALL BE ROUNDED WITH A ¼" FINISHING TOOL UNLESS OTHERWISE REQUIRED ON PLANS; AND CORNERS OF EXPANSION JOINTS IN THE ROADWAY FACES AND TOPS OF CURBS AND SIDEWALKS SHALL BE ROUNDED TO A ¼" RADIUS WITH A FINISHING STONE OR TOOL UNLESS OTHERWISE REQUIRED ON PLANS.

DOWELS:

DOWELS WHEN INDICATED ON PLANS AS FOR CULVERT EXTENSIONS, SHALL BE EMBEDDED AT LEAST 12" INTO THE OLD CONCRETE AND GROUTED INTO PLACE WITH 1:2 CEMENT MORTAR.

ALLOWANCE FOR DEAD LOAD DEFLECTION, SETTLEMENT, ETC. IN CASTING SUPERSTRUCTURES:

BRIDGES SHALL BE BUILT ON THE GRADE OR VERTICAL CURVE SHOWN ON PLANS. SLABS, CURBS AND PARAPETS SHALL CONFORM TO THE GRADE OR CURVE.

ALL DIMENSIONS WHICH ARE GIVEN IN SECTION AND ARE AFFECTED BY DEAD LOAD DEFLECTIONS ARE DIMENSIONS AT CENTER LINE OF BEARING UNLESS OTHERWISE NOTED ON PLANS. IN SETTING FORMS FOR STEEL BEAM BRIDGES AND PRESTRESSED CONCRETE GIRDER BRIDGES, ADJUSTMENTS SHALL BE MADE DUE TO THE DEAD LOAD DEFLECTIONS FOR THE ELEVATIONS SHOWN. WHERE BLOCKS ARE SHOWN OVER BEAMS FOR BUILDING UP TO THE SLAB, THE VERTICAL DIMENSIONS OF THE BLOCKS SHALL BE ADJUSTED BETWEEN BEARINGS TO COMPENSATE FOR DEAD LOAD DEFLECTIONS, VERTICAL CURVE ORDINATE, AND ACTUAL BEAM CAMBER. WHERE BOTTOM OF SLAB IS IN LINE WITH BOTTOM OF TOP FLANGES, DEPTH OF SLAB BETWEEN BEARINGS SHALL BE ADJUSTED TO COMPENSATE FOR DEAD LOAD DEFLECTION, VERTICAL CURVE ORDINATE, AND ACTUAL BEAM CAMBER.

IN SETTING FALSEWORK AND FORMS FOR REINFORCED CONCRETE SPANS, AN ALLOWANCE SHALL BE MADE FOR DEAD LOAD DEFLECTIONS, SETTLEMENT OF FALSEWORK, AND PERMANENT CAMBER WHICH SHALL BE PROVIDED FOR IN ADDITION TO THE ELEVATIONS SHOWN. AFTER REMOVAL OF THE FALSEWORK, THE FINISHED STRUCTURES SHALL CONFORM TO THE PROFILE AND ELEVATIONS SHOWN ON THE PLANS AND CONSTRUCTION ELEVATIONS FURNISHED BY THE ENGINEER.

DETAILED DRAWINGS FOR FALSEWORK OR FORMS FOR BRIDGE SUPERSTRUCTURE AND ANY STRUCTURE OR PARTS OF A STRUCTURE AS NOTED ON THE PLANS SHALL BE SUBMITTED TO THE ENGINEER FOR APPROVAL BEFORE CONSTRUCTION OF THE FALSEWORK OR FORMS IS STARTED.

REINFORCING STEEL:

ALL REINFORCING STEEL SHALL BE DEFORMED. DIMENSIONS RELATIVE TO PLACEMENT OF REINFORCING ARE TO CENTERS OF BARS UNLESS OTHERWISE INDICATED IN THE PLANS. DIMENSIONS ON BAR DETAILS ARE TO CENTERS OF BARS OR ARE OUT TO OUT AS INDICATED ON PLANS.

WIRE BAR SUPPORTS SHALL BE PROVIDED FOR REINFORCING STEEL WHERE INDICATED ON THE PLANS. WHEN BAR SUPPORT PIECES ARE PLACED IN CONTINUOUS LINES, THEY SHALL BE SO PLACED THAT THE ENDS OF THE SUPPORTING WIRES SHALL BE LAPPED TO LOCK LEGS ON ADJOINING PIECES.

STRUCTURAL STEEL:

AT THE CONTRACTOR'S OPTION, HE MAY SUBSTITUTE ⅞" Ø SHEAR STUDS FOR THE ¾" Ø STUDS SPECIFIED ON THE PLANS. THIS SUBSTITUTION SHALL BE MADE AT THE RATE OF 3 - ⅞" Ø STUDS FOR 4 - ¾" Ø STUDS, AND STUD SPACING CHANGES SHALL BE MADE AS NECESSARY TO PROVIDE THE SAME EQUIVALENT NUMBER OF ⅞" Ø STUDS ALONG THE BEAM AS SHOWN FOR ¾" Ø STUDS BASED ON THE RATIO OF 3 - ⅞" Ø STUDS FOR 4 - ¾" Ø STUDS. STUDS OF THE LENGTH SPECIFIED ON THE PLANS MUST BE PROVIDED. THE MAXIMUM SPACING SHALL BE 2'-0".

EXCEPT AT THE INTERIOR SUPPORTS OF CONTINUOUS BEAMS WHERE THE COVER PLATE IS IN CONTACT WITH BEARING PLATE, THE CONTRACTOR MAY, AT HIS OPTION, SUBSTITUTE FOR THE COVER PLATES DESIGNATED ON THE PLANS COVER PLATES OF THE EQUIVALENT AREA PROVIDED THESE PLATES ARE AT LEAST 5/16" IN THICKNESS AND DO NOT EXCEED A WIDTH EQUAL TO THE FLANGE WIDTH LESS 2" OR A THICKNESS EQUAL TO 2 TIMES THE FLANGE THICKNESS. THE SIZE OF FILLET WELDS SHALL CONFORM TO THE REQUIREMENTS OF THE CURRENT ANSI/AASHTO/AWS "BRIDGE WELDING CODE". ELECTROSLAG WELDING WILL NOT BE PERMITTED.

WITH THE SOLE EXCEPTION OF EDGES AT SURFACES WHICH BEAR ON OTHER SURFACES, ALL SHARP EDGES AND ENDS OF SHAPES AND PLATES SHALL BE SLIGHTLY ROUNDED BY SUITABLE MEANS TO A RADIUS OF APPROXIMATELY 1/16 INCH OR EQUIVALENT FLAT SURFACE AT A SUITABLE ANGLE PRIOR TO PAINTING, GALVANIZING, OR METALLIZING.

HANDRAILS AND POSTS:

METAL STANDARDS AND FACES OF THE CONCRETE END POSTS FOR THE METAL RAIL SHALL BE SET NORMAL TO THE GRADE OF THE CURB, UNLESS OTHERWISE SHOWN ON PLANS. THE METAL RAIL AND TOPS OF CONCRETE POSTS USED WITH THE ALUMINUM RAIL SHALL BE BUILT PARALLEL TO THE GRADE OF THE CURB.

METAL HANDRAILS SHALL BE IN ACCORDANCE WITH THE PLANS. RAILS SHALL BE AS MANUFACTURED FOR BRIDGE RAILING. CASTINGS SHALL BE OF A UNIFORM APPEARANCE. FINS AND OTHER DEFORMATIONS RESULTING FROM CASTING OR OTHERWISE SHALL BE REMOVED IN A MANNER SO THAT A UNIFORM COLORING OF THE COMPLETED CASTING SHALL BE OBTAINED. CASTINGS WITH DISCOLORATIONS OR OF NON-UNIFORM COLORING WILL NOT BE ACCEPTED. CERTIFIED MILL REPORTS ARE REQUIRED FOR METAL RAILS AND POSTS.

SPECIAL NOTES:

GENERALLY, IN CASE OF DISCREPANCY, THIS STANDARD SHEET OF NOTES SHALL GOVERN OVER THE SPECIFICATIONS, BUT THE REMAINDER OF THE PLANS SHALL GOVERN OVER NOTES HEREON, AND SPECIAL PROVISIONS SHALL GOVERN OVER ALL. SEE SPECIFICATIONS ARTICLE 105-4.

3/13/2018 8:06:58 AM R:\Structures\TBP_A_R_66_SMU_SN_01.dgn

REV. 6-16-95 EEM (✓) RGW REV. 5-7-03 RWW (✓) JTE REV. 10-1-11 MAA (✓) GM
REV. 8-16-99 RWW (✓) LES REV. 5-1-06 TLA (✓) GM REV. 12-17 MAA (✓) THC

ENGLISH

JANUARY, 1990

SHEET NO. S-16

TOTAL SHEETS 16

STD. NO. SN