DocuSign Envelope ID: 1576A943-B2EB-4096-AAA6-0030782240B5

09/08/99

# TIP PROJECT: B-5997

# CONTRACT: DD00279

See Sheet 1A For Index of Sheets

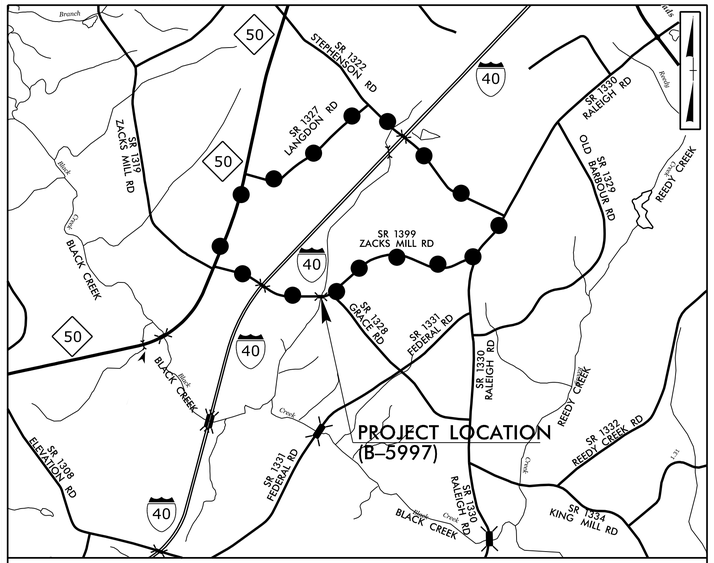


VICINITY MAP
(NOT TO SCALE)
DETOUR ROUTE (APPROXIMATE LENGTH = 8 MILES)

STATE OF NORTH CAROLINA
DIVISION OF HIGHWAYS

# JOHNSTON COUNTY

| STATE | STATE PROJECT REFERENCE NO. | SHEET NO. | TOTAL SHEETS |
|---|---|---|---|
| N.C. | B-5997 | 1 | |

| STATE PROJ. NO. | F.A. PROJ. NO. | DESCRIPTION |
|---|---|---|
| 48192.1.1 | BRZ-1399(001) | PE |
| 48192.2.1 | | R/W |
| 48192.3.1 | | CONSTRUCTION |

***LOCATION: BRIDGE NO. 277 OVER POLECAT BRANCH ON SR 1399 (ZACKS MILL RD)***

***TYPE OF WORK: GRADING, DRAINAGE, PAVING, AND STRUCTURE***

NAD 83/2011

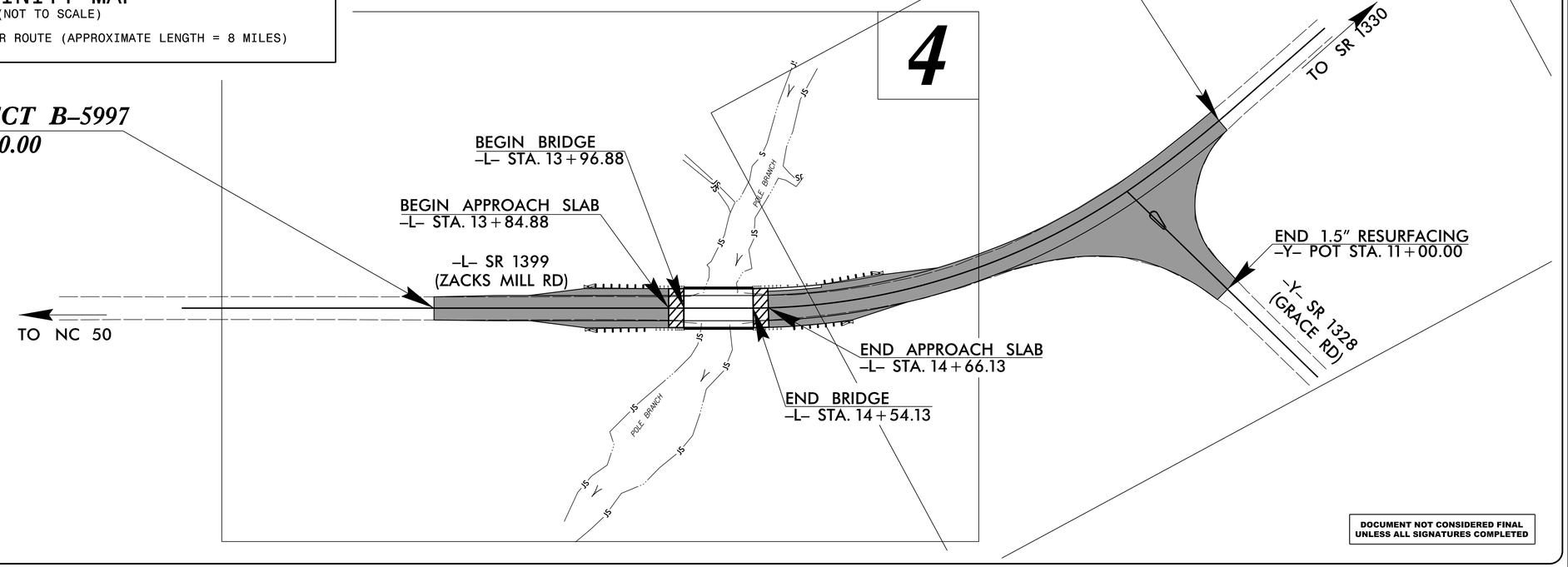


DOCUMENT NOT CONSIDERED FINAL UNLESS ALL SIGNATURES COMPLETED

## GRAPHIC SCALES

20 10 0 20 40
PLANS

20 10 0 20 40
PROFILE (HORIZONTAL)

4 2 0 4 8
PROFILE (VERTICAL)

## DESIGN DATA

ADT 2018 = < 1000
V = 40 MPH
TTST = 30
FUNC CLASS = LOCAL
SUBREGIONAL TIER

## PROJECT LENGTH

| | | |
|---|---|---|
| LENGTH ROADWAY STATE PROJECT B-5997 | = | 0.114 MILES |
| LENGTH STRUCTURES STATE PROJECT B-5997 | = | 0.011 MILES |
| TOTAL LENGTH STATE PROJECT B-5997 | = | 0.125 MILES |

Prepared for:
**HIGHWAY DIVISION 4**
509 WARD BLVD
WILSON, NC 27895

2018 STANDARD SPECIFICATIONS

**RIGHT OF WAY DATE:**
SEPTEMBER 28, 2018

**LETTING DATE:**
APRIL 23, 2019

Prepared by:
CALYX
ENGINEERS + CONSULTANTS
6750 TRYON ROAD
CARY, NC 27518
phone: 919.851.1912
CALYXengineers.com
NC License # F-1333

L. KEVIN AUSTIN, PE
PROJECT MANAGER

STEPHEN C. BROWDE, PE
ROADWAY PROJECT DESIGN ENGINEER

RUSSELL E. BROADWELL, PE
NCDOT CONTACT

**HYDRAULICS ENGINEER**

DocuSigned by: Frank F Fleming 193BC60E42864F8...
3/8/2019
P.E.
SIGNATURE:

NORTH CAROLINA PROFESSIONAL SEAL 20147 ENGINEER FRANK F. FLEMING

**ROADWAY DESIGN ENGINEER**

DocuSigned by: Stephen C. Browde 0E27971E12EA42B...
3/8/2019
P.E.
SIGNATURE:

NORTH CAROLINA PROFESSIONAL SEAL 15759 ENGINEER STEPHEN C. BROWDE

STATE OF NORTH CAROLINA DEPARTMENT OF TRANSPORTATION

3/5/2019
R:\Roadway\Proj\500277_rdy_TSH.dgn
rharper

DocuSign Envelope ID: 1576A943-B2EB-4096-AAA6-003078224 0B5

8/17/99

STATE OF NORTH CAROLINA
DIVISION OF HIGHWAYS

# INDEX OF SHEETS, GENERAL NOTES, AND LIST OF STANDARDS

| PROJECT REFERENCE NO. | SHEET NO. |
|---|---|
| B-5997 | 1A |

ROADWAY DESIGN ENGINEER

NORTH CAROLINA PROFESSIONAL SEAL 15759 ENGINEER STEPHEN C. BRONDE

DocuSigned by: Stephen C. Bronde 3/8/2019

**DOCUMENT NOT CONSIDERED FINAL UNLESS ALL SIGNATURES COMPLETED**

## *INDEX OF SHEETS*


| SHEET # | DESCRIPTION |
|---|---|
| 1 | TITLE SHEET |
| 1A | INDEX OF SHEETS, GENERAL NOTES, & LIST OF STANDARD DRAWINGS |
| 1B | CONVENTIONAL PLAN SHEET SYMBOLS |
| 1C-1 THRU 1C-2 | SURVEY CONTROL SHEETS |
| 2A-1 | PAVEMENT SCHEDULE AND TYPICAL SECTIONS |
| 2C-1 THRU 2C-3 | DETAILS FOR GUARDRAIL INSTALLATION & FOR GUARDRAIL STRUCTURE ANCHOR UNITS |
| 3B-1 | SUMMARIES OF GUARDRAIL, EARTHWORK, ASPHALT PAVEMENT REMOVAL & SHOULDER BERM GUTTER |
| 3D-1 | SUMMARY OF DRAINAGE |
| 4 THRU 6 | PLAN & PROFILE SHEETS |
| TMP-1 THRU TMP-2 | TRANSPORTATION MANAGEMENT PLAN |
| SD-1 | SPECIAL SIGN DESIGN |
| EC-1 THRU EC-7 | EROSION CONTROL PLANS |
| RF-1 | REFORESTATION |
| X-1 THRU X-4 | CROSS-SECTIONS |
| S-1 THRU S-14 | STRUCTURE PLANS |


## *STANDARD SPECIFICATIONS*

GENERAL NOTES:

2018 SPECIFICATIONS
EFFECTIVE: 01-16-2018
REVISED:

GRADE LINE:
GRADING AND SURFACING:

THE GRADE LINES SHOWN DENOTE THE FINISHED ELEVATION OF THE PROPOSED SURFACING AT GRADE POINTS SHOWN ON THE TYPICAL SECTIONS. GRADE LINES MAY BE ADJUSTED AT THEIR BEGINNING AND ENDING AND AT STRUCTURES AS DIRECTED BY THE ENGINEER IN ORDER TO SECURE A PROPER TIE-IN.

CLEARING:

CLEARING ON THIS PROJECT SHALL BE PERFORMED TO THE LIMITS ESTABLISHED BY METHOD II.

SUPERELEVATION:

ALL CURVES ON THIS PROJECT SHALL BE SUPERELEVATED IN ACCORDANCE WITH STD. NO. 225.04 USING THE RATE OF SUPERELEVATION AND RUNOFF SHOWN ON THE PLANS. SUPERELEVATION IS TO BE REVOLVED ABOUT THE GRADE POINTS SHOWN ON THE TYPICAL SECTIONS.

SHOULDER CONSTRUCTION:

ASPHALT, EARTH, AND CONCRETE SHOULDER CONSTRUCTION ON THE HIGH SIDE OF SUPERELEVATED CURVES SHALL BE IN ACCORDANCE WITH STD. NO. 560.01

SIDE ROADS:

THE CONTRACTOR WILL BE REQUIRED TO DO ALL NECESSARY WORK TO PROVIDE SUITABLE CONNECTIONS WITH ALL ROADS, STREETS, AND DRIVES ENTERING THIS PROJECT. THIS WORK WILL BE PAID FOR AT THE CONTRACT UNIT PRICE FOR THE PARTICULAR ITEMS INVOLVED.

GUARDRAIL:

THE GUARDRAIL LOCATIONS SHOWN ON THE PLANS MAY BE ADJUSTED DURING CONSTRUCTION AS DIRECTED BY THE ENGINEER. THE CONTRACTOR SHOULD CONSULT WITH THE ENGINEER PRIOR TO ORDERING GUARDRAIL MATERIAL.

SUBSURFACE PLANS:

NO SUBSURFACE PLANS ARE AVAILABLE ON THIS PROJECT. THE CONTRACTOR SHOULD MAKE HIS OWN INVESTIGATION AS TO THE SUBSURFACE CONDITIONS.

END BENTS:

THE ENGINEER SHALL CHECK THE STRUCTURE END BENT PLANS, DETAILS, AND CROSS-SECTION PRIOR TO SETTING OF THE SLOPE STAKES FOR THE EMBANKMENT OR EXCAVATION APPROACHING A BRIDGE.

RIGHT-OF-WAY MARKERS:

ALL RIGHT-OF-WAY MARKERS ON THIS PROJECT SHALL BE PLACED BY OTHERS.

## *LIST OF STANDARD DRAWINGS*

EFF. 01-16-2018
REV.

2018 ROADWAY ENGLISH STANDARD DRAWINGS

The following Roadway Standards as appear in "Roadway Standard Drawings" Highway Design Branch - N. C. Department of Transportation - Raleigh, N. C., Dated January, 2018 are applicable to this project and by reference hereby are considered a part of these plans:

| STD.NO. | TITLE |
|---|---|
| DIVISION 2 - EARTHWORK | |
| 200.02 | Method of Clearing - Method II |
| 225.02 | Guide for Grading Subgrade - Secondary and Local |
| 225.04 | Method of Obtaining Superelevation - Two Lane Pavement |
| DIVISION 3 - PIPE CULVERTS | |
| 300.01 | Method of Pipe Installation |
| DIVISION 4 - MAJOR STRUCTURES | |
| 422.02 | Reinforced Bridge Approach Fills - Type II Modified Approach Fill |
| DIVISION 5 - SUBGRADE, BASES AND SHOULDERS | |
| 560.01 | Method of Shoulder Construction - High Side of Superelevated Curve - Method I |
| DIVISION 6 - ASPHALT BASES AND PAVEMENTS | |
| 654.01 | Pavement Repairs |
| DIVISION 8 - INCIDENTALS | |
| 840.00 | Concrete Base Pad for Drainage Structures |
| 840.18 | Concrete Grated Drop Inlet Type 'B' - 12" thru 36" Pipe |
| 840.29 | Frames and Narrow Slot Flat Grates |
| 840.35 | Traffic Bearing Grated Drop Inlet - for Cast Iron Double Frame and Grates |
| 846.01 | Concrete Curb, Gutter and Curb & Gutter |
| 846.04 | Drop Inlet Installation in Shoulder Berm Gutter |
| 862.01 | Guardrail Placement |
| 862.02 | Guardrail Installation |
| 876.02 | Guide for Rip Rap at Pipe Outlets |

3/5/2019
R:\Roadway\Proj\500277_rdy_psh_1A.dgn
cbarber

DocuSign Envelope ID: 1576A943-B2EB-4096-AAA6-003078224 0B5

12/2/2016

| PROJECT REFERENCE NO. | SHEET NO. |
|---|---|
| B-5997 | 1B |

STATE OF NORTH CAROLINA, DIVISION OF HIGHWAYS

# CONVENTIONAL PLAN SHEET SYMBOLS

*Note: Not to Scale*

**S.U.E. = Subsurface Utility Engineering*

## BOUNDARIES AND PROPERTY:

- State Line
- County Line
- Township Line
- City Line
- Reservation Line
- Property Line
- Existing Iron Pin — EIP
- Computed Property Corner
- Property Monument — ECM
- Parcel/Sequence Number — 123
- Existing Fence Line
- Proposed Woven Wire Fence
- Proposed Chain Link Fence
- Proposed Barbed Wire Fence
- Existing Wetland Boundary — WLB
- Proposed Wetland Boundary — WLB
- Existing Endangered Animal Boundary — EAB
- Existing Endangered Plant Boundary — EPB
- Existing Historic Property Boundary — HPB
- Known Contamination Area: Soil — S
- Potential Contamination Area: Soil — S
- Known Contamination Area: Water — W
- Potential Contamination Area: Water — W
- Contaminated Site: Known or Potential

## BUILDINGS AND OTHER CULTURE:

- Gas Pump Vent or U/G Tank Cap
- Sign — S
- Well — W
- Small Mine
- Foundation
- Area Outline
- Cemetery
- Building
- School
- Church
- Dam

## HYDROLOGY:

- Stream or Body of Water
- Hydro, Pool or Reservoir
- Jurisdictional Stream — JS
- Buffer Zone 1 — BZ 1
- Buffer Zone 2 — BZ 2
- Flow Arrow
- Disappearing Stream
- Spring
- Wetland
- Proposed Lateral, Tail, Head Ditch — FLOW
- False Sump

## RAILROADS:

- Standard Gauge — CSX TRANSPORTATION
- RR Signal Milepost — MILEPOST 35
- Switch — SWITCH
- RR Abandoned
- RR Dismantled

## RIGHT OF WAY & PROJECT CONTROL:

- Secondary Horiz and Vert Control Point
- Primary Horiz Control Point
- Primary Horiz and Vert Control Point
- Exist Permanent Easment Pin and Cap
- New Permanent Easement Pin and Cap
- Vertical Benchmark
- Existing Right of Way Marker
- Existing Right of Way Line
- New Right of Way Line — RW
- New Right of Way Line with Pin and Cap — RW
- New Right of Way Line with Concrete or Granite R/W Marker — RW
- New Control of Access Line with Concrete C/A Marker — CA
- Existing Control of Access — CA
- New Control of Access — CA
- Existing Easement Line — E
- New Temporary Construction Easement — E
- New Temporary Drainage Easement — TDE
- New Permanent Drainage Easement — PDE
- New Permanent Drainage / Utility Easement — DUE
- New Permanent Utility Easement — PUE
- New Temporary Utility Easement — TUE
- New Aerial Utility Easement — AUE

## ROADS AND RELATED FEATURES:

- Existing Edge of Pavement
- Existing Curb
- Proposed Slope Stakes Cut — C
- Proposed Slope Stakes Fill — F
- Proposed Curb Ramp — CR
- Existing Metal Guardrail
- Proposed Guardrail
- Existing Cable Guiderail
- Proposed Cable Guiderail
- Equality Symbol
- Pavement Removal

## VEGETATION:

- Single Tree
- Single Shrub
- Hedge
- Woods Line
- Orchard
- Vineyard — Vineyard

## EXISTING STRUCTURES:

MAJOR:

- Bridge, Tunnel or Box Culvert — CONC
- Bridge Wing Wall, Head Wall and End Wall — CONC WW

MINOR:

- Head and End Wall — CONC HW
- Pipe Culvert
- Footbridge
- Drainage Box: Catch Basin, DI or JB — CB
- Paved Ditch Gutter
- Storm Sewer Manhole — S
- Storm Sewer — S

## UTILITIES:

POWER:

- Existing Power Pole
- Proposed Power Pole
- Existing Joint Use Pole
- Proposed Joint Use Pole
- Power Manhole — P
- Power Line Tower
- Power Transformer
- U/G Power Cable Hand Hole
- H-Frame Pole
- U/G Power Line LOS B (S.U.E.*) — P
- U/G Power Line LOS C (S.U.E.*) — P
- U/G Power Line LOS D (S.U.E.*) — P

TELEPHONE:

- Existing Telephone Pole
- Proposed Telephone Pole
- Telephone Manhole — T
- Telephone Pedestal — T
- Telephone Cell Tower
- U/G Telephone Cable Hand Hole — HH
- U/G Telephone Cable LOS B (S.U.E.*) — T
- U/G Telephone Cable LOS C (S.U.E.*) — T
- U/G Telephone Cable LOS D (S.U.E.*) — T
- U/G Telephone Conduit LOS B (S.U.E.*) — TC
- U/G Telephone Conduit LOS C (S.U.E.*) — TC
- U/G Telephone Conduit LOS D (S.U.E.*) — TC
- U/G Fiber Optics Cable LOS B (S.U.E.*) — T FO
- U/G Fiber Optics Cable LOS C (S.U.E.*) — T FO
- U/G Fiber Optics Cable LOS D (S.U.E.*) — T FO

WATER:

- Water Manhole — W
- Water Meter
- Water Valve
- Water Hydrant
- U/G Water Line LOS B (S.U.E*) — W
- U/G Water Line LOS C (S.U.E*) — W
- U/G Water Line LOS D (S.U.E*) — W
- Above Ground Water Line — A/G Water

TV:

- TV Pedestal — C
- TV Tower
- U/G TV Cable Hand Hole — HH
- U/G TV Cable LOS B (S.U.E.*) — TV
- U/G TV Cable LOS C (S.U.E.*) — TV
- U/G TV Cable LOS D (S.U.E.*) — TV
- U/G Fiber Optic Cable LOS B (S.U.E.*) — TV FO
- U/G Fiber Optic Cable LOS C (S.U.E.*) — TV FO
- U/G Fiber Optic Cable LOS D (S.U.E.*) — TV FO

GAS:

- Gas Valve
- Gas Meter
- U/G Gas Line LOS B (S.U.E.*) — G
- U/G Gas Line LOS C (S.U.E.*) — G
- U/G Gas Line LOS D (S.U.E.*) — G
- Above Ground Gas Line — A/G Gas

SANITARY SEWER:

- Sanitary Sewer Manhole
- Sanitary Sewer Cleanout
- U/G Sanitary Sewer Line — SS
- Above Ground Sanitary Sewer — A/G Sanitary Sewer
- SS Forced Main Line LOS B (S.U.E.*) — FSS
- SS Forced Main Line LOS C (S.U.E.*) — FSS
- SS Forced Main Line LOS D (S.U.E.*) — FSS

MISCELLANEOUS:

- Utility Pole
- Utility Pole with Base
- Utility Located Object
- Utility Traffic Signal Box — S
- Utility Unknown U/G Line LOS B (S.U.E.*) — ?UTL
- U/G Tank; Water, Gas, Oil
- Underground Storage Tank, Approx. Loc. — UST
- A/G Tank; Water, Gas, Oil
- Geoenvironmental Boring
- U/G Test Hole LOS A (S.U.E.*)
- Abandoned According to Utility Records — AATUR
- End of Information — E.O.I.

DocuSign Envelope ID: 1576A943-B2EB-4096-AAA6-003078224 0B5

| PROJECT REFERENCE NO. | SHEET NO. |
|---|---|
| B-5997 | 1C-1 |
| Location and Surveys | |

# SURVEY CONTROL SHEET B-5997

## W/ EXISTING CENTERLINE ALIGNMENTS PRIOR TO CONSTRUCTION

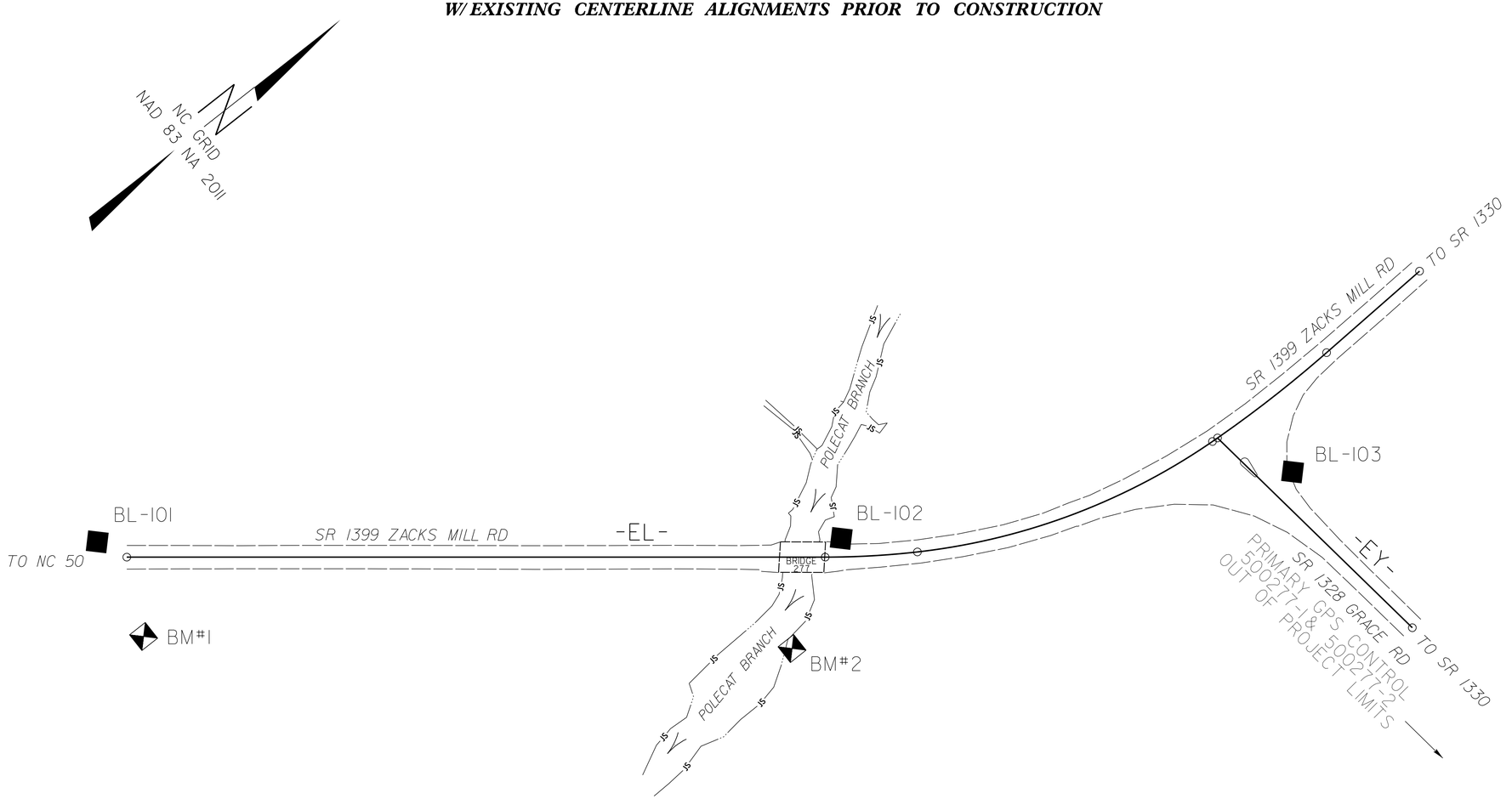


## DATUM DESCRIPTION

THE LOCALIZED COORDINATE SYSTEM DEVELOPED FOR THIS PROJECT IS BASED ON THE STATE PLANE COORDINATES ESTABLISHED BY NCDOT FOR MONUMENT "500277-2"
WITH NAD 83/NA 2011 STATE PLANE GRID COORDINATES OF
NORTHING: 628797.532(ft) EASTING: 2136789.475(ft)
ELEVATION: 203.498(ft)
THE AVERAGE COMBINED GRID FACTOR USED ON THIS PROJECT (GROUND TO GRID) IS: 0.999875495
THE N.C. LAMBERT GRID BEARING AND LOCALIZED HORIZONTAL GROUND DISTANCE FROM "500277-2" TO -L- STATION IS

ALL LINEAR DIMENSIONS ARE LOCALIZED HORIZONTAL DISTANCES
VERTICAL DATUM USED IS NAVD 88

NOTES:

1. IF FURTHER INFORMATION REGARDING PROJECT CONTROL IS NEEDED, PLEASE CONTACT THE LOCATION AND SURVEYS UNIT.

2. PROJECT CONTROL WAS ESTABLISHED USING GNSS, THE GLOBAL NAVIGATION SATELLITE SYSTEM.

REVISIONS

6/2/99

3/5/2019
R:\Proj\Survey\500277.ls.lcl.dgn

DocuSign Envelope ID: 1576A943-B2EB-4096-AAA6-003078224 0B5

| PROJECT REFERENCE NO. | SHEET NO. |
|---|---|
| B-5997 | 1C-2 |
| Location and Surveys | |

# SURVEY CONTROL SHEET B-5997

### W/ EXISTING CENTERLINE ALIGNMENTS PRIOR TO CONSTRUCTION

## BASELINE DATA

BL

| POINT | DESC. | NORTH | EAST | ELEVATION |
|---|---|---|---|---|
| 101 | BL-101 | 627965.9850 | 2135344.4330 | 165.00 |
| 102 | BL-102 | 628421.6860 | 2135699.1190 | 153.15 |
| 103 | BL-103 | 628729.0610 | 2135874.9090 | 158.79 |
| 1 | 500277-1 | 628778.8810 | 2137410.0500 | 218.41 |
| 2 | 500277-2 | 628797.5320 | 2136789.4750 | 203.50 |

## BENCHMARK DATA

**********

BM1 ELEVATION = 165.79

N 627949 E 2135425

COTTON SPINDLE IN BASE OF 19" GUM

**********

**********

BM2 ELEVATION = 151.71

N 628339 E 2135743

COTTON SPINDLE IN BASE OF 13" MAPLE

**********

## ALIGNMENT DATA

EL

| POINT | N | E | BEARING | DIST | DELTA | D | L | T | R |
|---|---|---|---|---|---|---|---|---|---|
| POT | 627976.705 | 2135368.034 | | | | | | | |
| LINE | | | N 38°09′21.5" E | 542.06 | | | | | |
| PC | 628402.946 | 2135702.922 | | | | | | | |
| CURVE | | | N 34°54′48.4" E | 71.70 | 06°29′06.2"(LT) | 09°02′25.1" | 71.73 | 35.91 | 633.78 |
| PCC | 628461.738 | 2135743.957 | | | | | | | |
| CURVE | | | N 17°37′32.7" E | 244.53 | 28°05′25.3"(LT) | 11°22′21.7" | 247.00 | 126.03 | 503.80 |
| PCC | 628694.790 | 2135818.001 | | | | | | | |
| CURVE | | | N 00°14′38.5" E | 112.26 | 06°40′23.0"(LT) | 05°56′27.8" | 112.32 | 56.22 | 964.41 |
| PT | 628807.047 | 2135818.479 | | | | | | | |
| LINE | | | N 03°05′33.0" W | 95.95 | | | | | |
| POT | 628902.858 | 2135813.303 | | | | | | | |

EY

| POINT | N | E | BEARING | DIST |
|---|---|---|---|---|
| POT | 628699.550 | 2135818.287 | | |
| LINE | | | N 82°24′38.7" E | 211.10 |
| POT | 628727.431 | 2136027.538 | | |

NOTES:

1. IF FURTHER INFORMATION REGARDING PROJECT CONTROL IS NEEDED, PLEASE CONTACT THE LOCATION AND SURVEYS UNIT.

2. PROJECT CONTROL WAS ESTABLISHED USING GNSS, THE GLOBAL NAVIGATION SATELLITE SYSTEM.

REVISIONS

6/2/99

3/5/2019
R:\Roadway\Survey\500277_ls_1c2.dgn
ldarcier

DocuSign Envelope ID: 1576A943-B2EB-4096-AAA6-003078224 0B5

| PROJECT REFERENCE NO. | SHEET NO. |
|---|---|
| B-5997 | 2A-1 |

CALYX ENGINEERS + CONSULTANTS
6750 TRYON ROAD
CARY, NC 27518
phone: 919.851.1912
CALYXengineers.com
NC License # F-1333
Formerly Mulkey Engineers & Consultants

ROADWAY DESIGN ENGINEER
NORTH CAROLINA PROFESSIONAL SEAL 045759 ENGINEER STEPHEN C. BROWDE
DocuSigned by: Stephen C. Browde
10/8/2019

PAVEMENT DESIGN ENGINEER
NORTH CAROLINA PROFESSIONAL SEAL 034345 ENGINEER RUSSELL E. BROADWELL
DocuSigned by: Russell E. Broadwell
10/8/2019

**DOCUMENT NOT CONSIDERED FINAL UNLESS ALL SIGNATURES COMPLETED**

## PAVEMENT SCHEDULE

| | |
|---|---|
| C1 | PROP. APPROX. 1.5" ASPHALT CONCRETE SURFACE COURSE TYPE S9.5B, AT AN AVERAGE RATE OF 165 LBS. PER SQ. YD. |
| C2 | PROP. APPROX. 3" ASPHALT CONCRETE SURFACE COURSE TYPE S9.5B, AT AN AVERAGE RATE OF 165 LBS. PER SQ. YD. IN EACH OF TWO LAYERS. |
| C3 | PROP. VAR. DEPTH ASPHALT CONCRETE SURFACE COURSE TYPE S9.5B, AT AN AVERAGE RATE OF 110 LBS. PER SQ. YD. PER 1" DEPTH. TO BE PLACED IN LAYERS NOT TO EXCEED 1.5" IN DEPTH. |
| E1 | PROP. APPROX. 4" ASPHALT CONCRETE BASE COURSE, TYPE B25.0C, AT AN AVERAGE RATE OF 456 LBS. PER SQ. YD. |
| E2 | PROP. VAR. DEPTH ASPHALT CONCRETE BASE COURSE, TYPE B25.0C, AT AN AVERAGE RATE OF 114 LBS. PER SQ. YD. PER 1" DEPTH. TO BE PLACE IN LAYERS NOT LESS THAN 3" IN DEPTH OR GREATER THAN 5½" IN DEPTH. |
| R | PROP. SHOULDER BERM GUTTER |
| T | EARTH MATERIAL. |
| U | EXISTING PAVEMENT. |
| W | VARIABLE DEPTH ASPHALT PAVEMENT (SEE WEDGING DETAIL) |
| Y | INCIDENTAL MILLING |

NOTE: PAVEMENT EDGE SLOPES ARE 1:1 UNLESS SHOWN OTHERWISE.

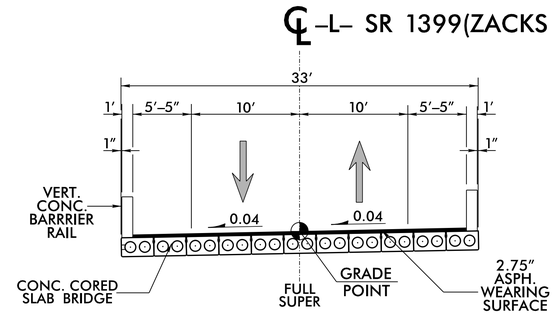


## BRIDGE SKETCH NO.1
BRIDGE #277

USE BRIDGE SKETCH NO. 1 AS FOLLOWS:
–L– STA. 13+98.00 (BEGIN BRIDGE) TO 14+53.00 (END BRIDGE)

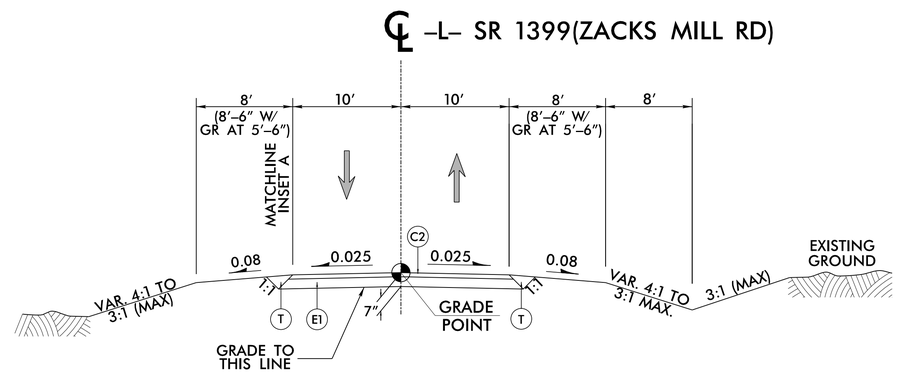


## TYPICAL SECTION NO. 2

USE TYPICAL SECTION NO. 2 AS FOLLOWS:
–L– STA. 12+00.00 TO –L– STA. 13+98.00 (BEGIN BRIDGE)
–L– STA. 14+53.00 (END BRIDGE) TO –L– STA. 16+50.00

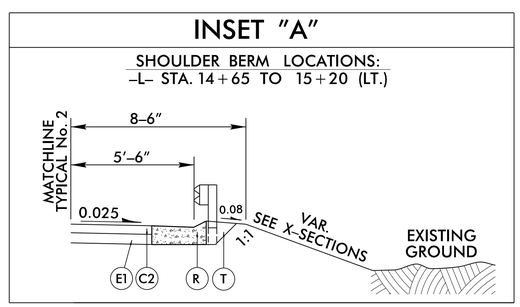


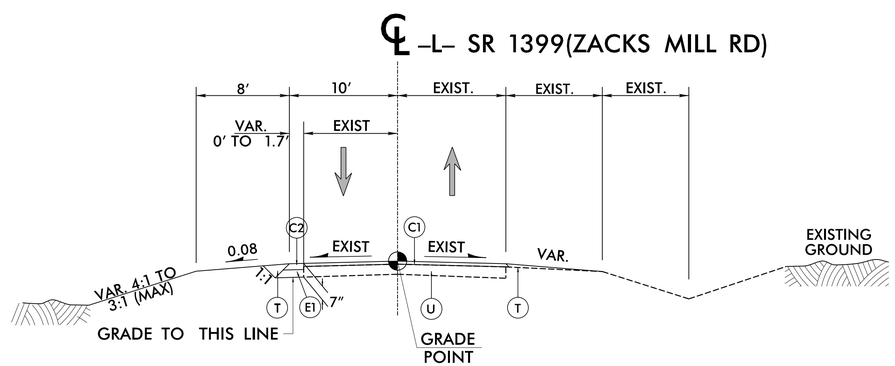


## TYPICAL SECTION NO. 3

USE TYPICAL SECTION NO. 3 AS FOLLOWS:
–L– STA. 16+50.00 TO –L– STA. 18+60.00

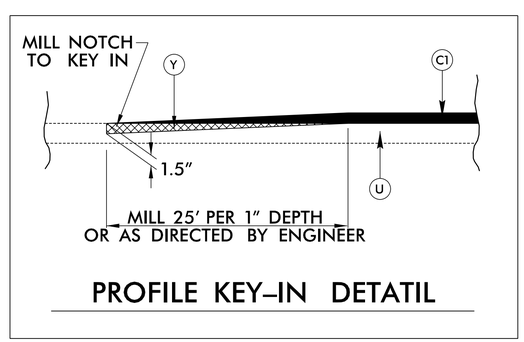


## PROFILE KEY–IN DETATIL

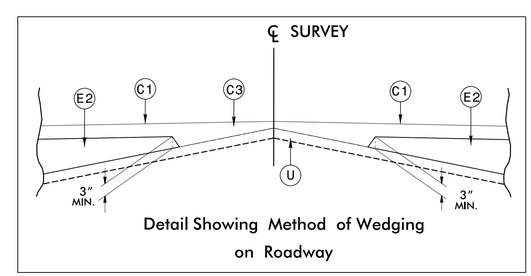


Detail Showing Method of Wedging on Roadway

6/2/99
3/7/2019
R:\Roadway\Proj\5002777_rdy_typ.dgn
emorris

DocuSign Envelope ID: 1576A943-B2EB-4096-AAA6-0030782240B5

| PROJECT REFERENCE NO. | SHEET NO. |
|---|---|
| B-5997 | 2C-1 |

**DOCUMENT NOT CONSIDERED FINAL UNLESS ALL SIGNATURES COMPLETED**

STATE OF NORTH CAROLINA
DEPT. OF TRANSPORTATION
DIVISION OF HIGHWAYS
RALEIGH, N.C.

ROADWAY DETAIL DRAWING FOR
**GUARDRAIL INSTALLATION**

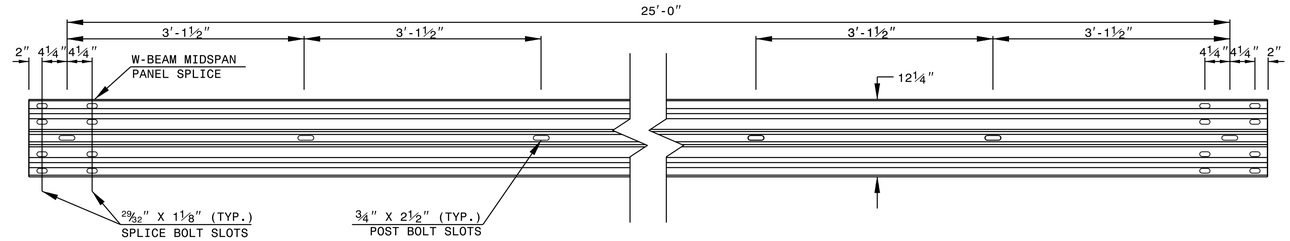


## STANDARD W-BEAM GUARDRAIL

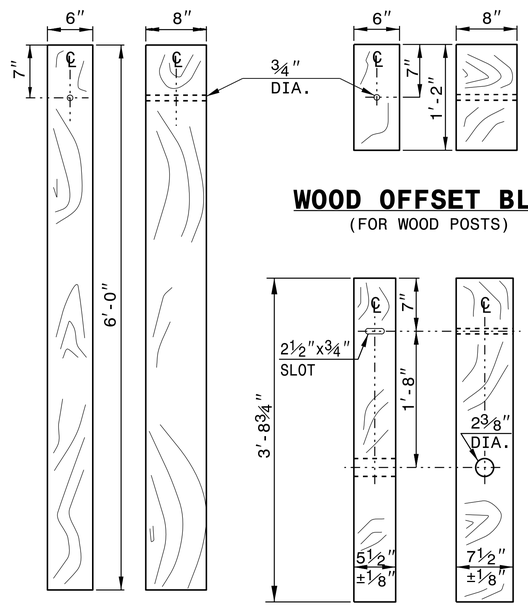


## STANDARD LINE POST

## WOOD OFFSET BLOCK
(FOR WOOD POSTS)

## SHORT WOOD BREAKAWAY POST

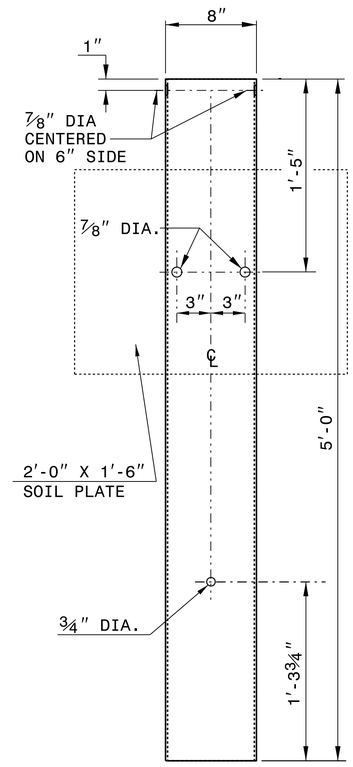


## STEEL TUBE
TS 6"x8"x0.1875"

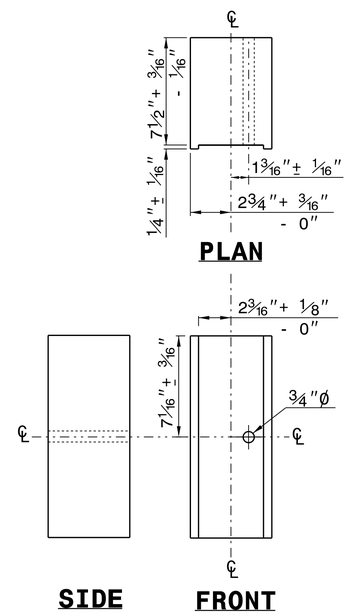


## ROUTED OFFSET BLOCK

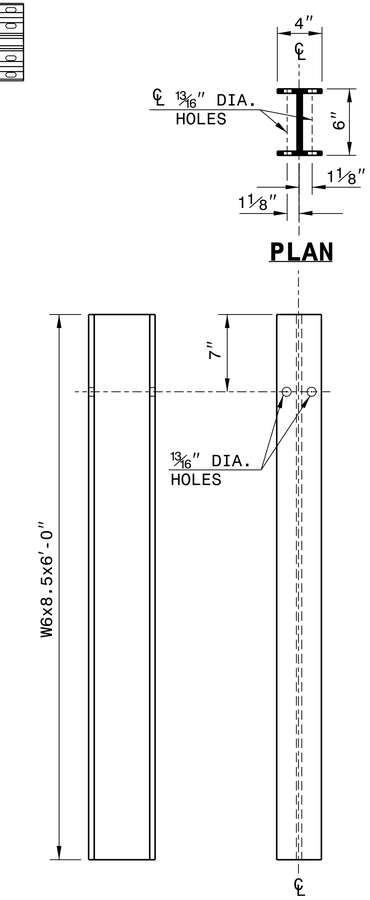


## "W6" STEEL POST

## SYSTEM PARTS

SHEET 6 OF 8
**862D02**

STATE OF NORTH CAROLINA
DEPT. OF TRANSPORTATION
DIVISION OF HIGHWAYS
RALEIGH, N.C.

ROADWAY DETAIL DRAWING FOR
**GUARDRAIL INSTALLATION**

SHEET 6 OF 8
**862D02**

**CONTRACTS STANDARDS AND DEVELOPMENT UNIT**
Office 919-707-6950 FAX 919-250-4119

**SEE TITLE BLOCK**

ORIGINAL BY: J.HOWERTON DATE: 3-7-2018
MODIFIED BY: DATE:
CHECKED BY: DATE:
FILE SPEC.:

DocuSign Envelope ID: 157A5A42-B2EB-4D96-AA46-0030782240B5



STATE OF NORTH CAROLINA
DEPT. OF TRANSPORTATION
DIVISION OF HIGHWAYS
RALEIGH, N.C.

ROADWAY DETAIL DRAWING FOR
**STRUCTURE ANCHOR UNITS**
GUARDRAIL ANCHOR UNIT, TYPE III
FOR ATTACHMENT TO RAIL ON BRIDGE

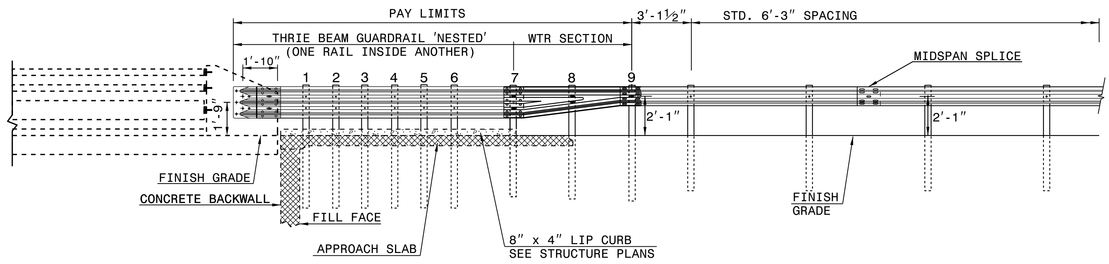


**ELEVATION**

NOTE:
**POST NOT REQUIRED FOR SKEW ANGLES GREATER THAN 150° OR LESS THAN 30° UNLESS OTHERWISE DIRECTED BY THE ENGINEER.
*THE DISTANCE FROM END OF BRIDGE RAIL TO CENTER LINE OF THE FIRST POST SHOULD BE 11½" IF CONCRETE BACKWALL IS NOT PRESENT.
-SHOULDER BERM GUTTER MUST BE INSTALLED TO THE LIMITS 8" x 4" LIP CURB IS SHOWN IF ANCHOR UNIT IS NOT ADJACENT TO AN APPROACH SLAB.
-MEASURE GUARDRAIL HEIGHT FROM THE TOP OF ADJACENT SURFACE (SHOULDER, BERM, OR GUTTER).
-LAP JOINTS IN THE DIRECTION OF TRAFFIC FLOW.
-SEE SHEET 3 FOR POST SECTIONS 1 THRU 9.

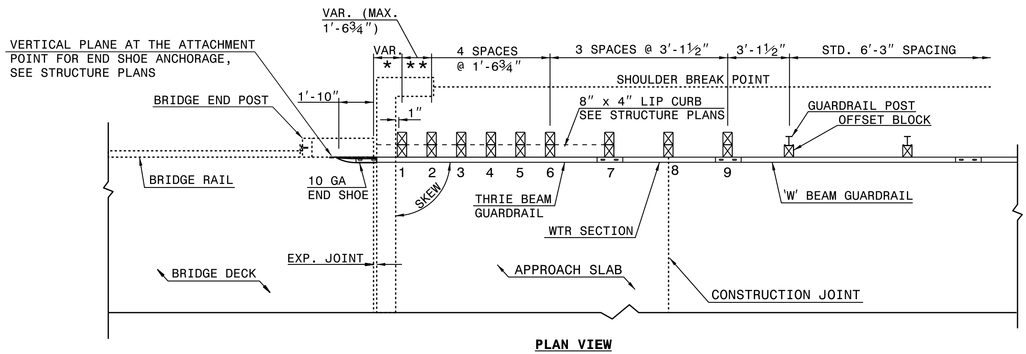


**PLAN VIEW**

## GUARDRAIL ANCHOR UNIT, TYPE III FOR ATTACHMENT TO RAIL ON BRIDGE

SHEET 1 OF 7
**862D03**

STATE OF NORTH CAROLINA
DEPT. OF TRANSPORTATION
DIVISION OF HIGHWAYS
RALEIGH, N.C.

ROADWAY DETAIL DRAWING FOR
**STRUCTURE ANCHOR UNITS**
GUARDRAIL ANCHOR UNIT, TYPE III
FOR ATTACHMENT TO RAIL ON BRIDGE

SHEET 1 OF 7
**862D03**

STATE OF NORTH CAROLINA
DEPT. OF TRANSPORTATION
DIVISION OF HIGHWAYS
RALEIGH, N.C.

ROADWAY DETAIL DRAWING FOR
**STRUCTURE ANCHOR UNITS**
GUARDRAIL ANCHOR UNIT, TYPE III FOR ATTACHMENT TO
RAIL ON BRIDGE - SUB REGIONAL TIER

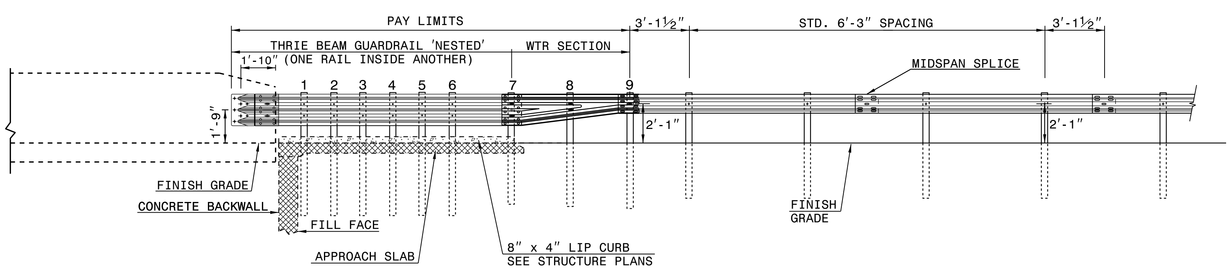


**ELEVATION**

NOTE:
**POST NOT REQUIRED FOR SKEW ANGLES GREATER THAN 150° OR LESS THAN 30° UNLESS OTHERWISE DIRECTED BY THE ENGINEER.
*THE DISTANCE FROM END OF BRIDGE RAIL TO CENTER LINE OF THE FIRST POST SHOULD BE 11½" IF CONCRETE BACKWALL IS NOT PRESENT.
-SHOULDER BERM GUTTER MUST BE INSTALLED TO THE LIMITS 8" x 4" LIP CURB IS SHOWN IF ANCHOR UNIT IS NOT ADJACENT TO AN APPROACH SLAB.
-MEASURE GUARDRAIL HEIGHT FROM THE TOP OF ADJACENT SURFACE (SHOULDER, BERM, OR GUTTER).
-LAP JOINTS IN THE DIRECTION OF TRAFFIC FLOW.
-SEE SHEET 3 FOR POST SECTIONS 1 THRU 9.

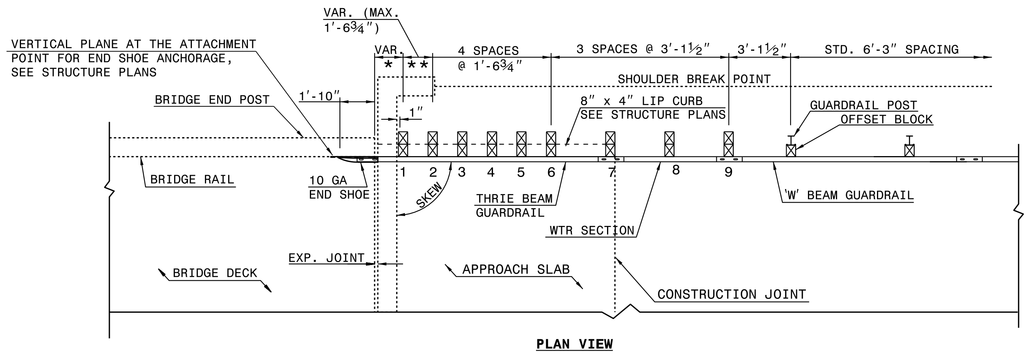


**PLAN VIEW**

## GUARDRAIL ANCHOR UNIT, TYPE III FOR ATTACHMENT TO RAIL ON BRIDGE - SUB REGIONAL TIER

SHEET 2 OF 7
**862D03**

STATE OF NORTH CAROLINA
DEPT. OF TRANSPORTATION
DIVISION OF HIGHWAYS
RALEIGH, N.C.

ROADWAY DETAIL DRAWING FOR
**STRUCTURE ANCHOR UNITS**
GUARDRAIL ANCHOR UNIT, TYPE III FOR ATTACHMENT TO
RAIL ON BRIDGE - SUB REGIONAL TIER

SHEET 2 OF 7
**862D03**

**SEE TITLE BLOCK**

ORIGINAL BY: J. HOWERTON DATE: 06-22-12
MODIFIED BY: DATE:
CHECKED BY: DATE:
FILE SPEC.:

**CONTRACT STANDARDS AND DEVELOPMENT UNIT**
Office 919-707-6950 FAX 919-250-4119

DOCUMENT NOT CONSIDERED FINAL UNLESS ALL SIGNATURES COMPLETED

3/8/2019

PROJECT REFERENCE NO. B-5997
SHEET NO. 2C-2

23-MAY-2017 12:52
S:\Contracts\Contracts\Special Details\jhowerton\Standard Drawings\2012 Standard Drawings\Details in Lieu of Standards\Division 8\862d01 862d03 862d03\862d03.dgn
jhowerton AT CSD-292595

STATE OF NORTH CAROLINA
DEPT. OF TRANSPORTATION
DIVISION OF HIGHWAYS
RALEIGH, N.C.

ROADWAY DETAIL DRAWING FOR
**GUARDRAIL ANCHOR UNIT**
GUARDRAIL ANCHOR UNIT TYPE B-77
FOR F-SHAPE BARRIER

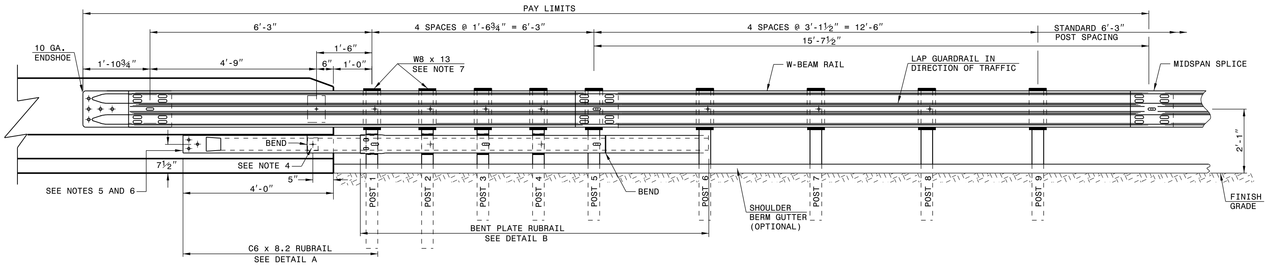


## ELEVATION

GENERAL NOTES:
1) POSTS 1 THROUGH 5 REQUIRE AN ADDITIONAL HOLE TO ATTACH LOWER BLOCKOUTS AND/OR RUBRAIL.
2) RUBRAIL BLOCKOUTS LOCATED ON POSTS 1 THROUGH 4 ARE OFFSET DRILLED AND SECURED WITH ⅝" BUTTONHEAD BOLTS (SEE CHART FOR BOLT LENGTHS). SECURE BLOCKS ONLY TO POSTS 2 AND 4. SECURE RUBRAIL AND BLOCKOUTS TO POSTS 1 AND 3. RUBRAIL IS SECURED TO POST 5 WITH A ⅝" x 4½" BUTTONHEAD BOLT. RUBRAIL IS FLARED TO BACK OF POST 6 AND NOT SECURED.
3) STEEL SPACER TUBE IS A SCHEDULE 40 GALVANIZED PIPE 6" INSIDE DIAMETER x 9" LONG. ATTACH TUBE TO GUARDRAIL ONLY WITH ⅝" x 1¼" LONG BUTTONHEAD BOLT AND RECTANGULAR PLATE WASHER.
4) SEE DETAIL D FOR SLOPED RUBRAIL BLOCKOUT. BLOCKOUT IS ATTACHED TO RAIL ELEMENT ONLY. USE ⅜" x 3" LAG BOLT WITH FLAT WASHER.
5) SHOP FABRICATE THE C6 x 8.2 RUBRAIL END TO BE CONSISTENT WITH THE SLOPE OF THE F SHAPE AND ATTACH FLUSH WITH THE SLOPED TOE OF THE BARRIER OR BRIDGE RAIL.
6) ANCHORAGE:
   (a) AT EXISTING BRIDGE RAIL AND NEW OR EXISTING BARRIERS, ANCHOR RUBRAIL USING THREE ⅝" x 6" CHEMICALLY ANCHORED BOLTS WITH WASHERS. MAXIMUM PROJECTION FOR BOLTS IS ½".
   (b) AT EXISTING BRIDGE RAIL AND NEW OR EXISTING BARRIERS, ANCHOR THE W-BEAM END SHOE USING A 4 BOLT HOLD DOWN PLATE (SEE STD. DWG. 862.04). A 4 BOLT INSERT ASSEMBLY IS ALLOWED ON PRECAST REINFORCED CONCRETE BARRIER (SEE STD. DWG. 857.01). INSTALL THE W-BEAM END SHOE BEHIND THE NESTED W-BEAM ELEMENTS.
   (c) AT NEW BRIDGE RAIL, ANCHOR THE W-BEAM END SHOE AND RUBRAIL AS DETAILED ON THE STRUCTURE PLANS.
7) POSTS 1 AND 2 ARE W6 x 13, 7'-6" LONG. ALL OTHER POSTS IN THE ANCHOR UNIT ARE W6 x 8.5.

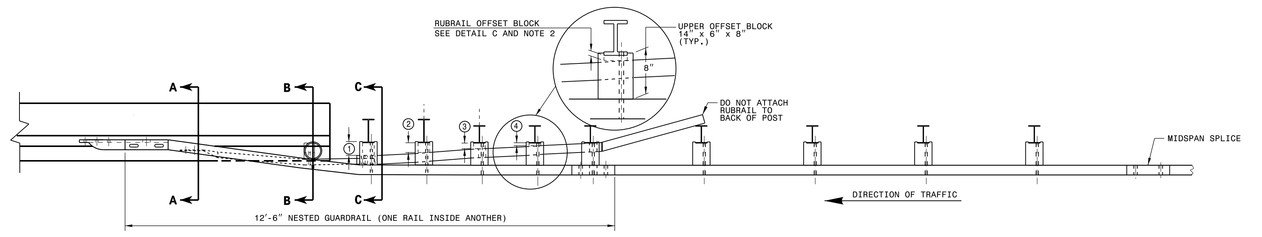


## PLAN

## GUARDRAIL ANCHOR UNIT TYPE B-77

SHEET 4 OF 7
**862D03**

STATE OF NORTH CAROLINA
DEPT. OF TRANSPORTATION
DIVISION OF HIGHWAYS
RALEIGH, N.C.

ROADWAY DETAIL DRAWING FOR
**STRUCTURE ANCHOR UNIT**
GUARDRAIL ANCHOR UNIT TYPE B-77
FOR F-SHAPE BARRIER

SHEET 4 OF 7
**862D03**

STATE OF NORTH CAROLINA
DEPT. OF TRANSPORTATION
DIVISION OF HIGHWAYS
RALEIGH, N.C.

ROADWAY DETAIL DRAWING FOR
**STRUCTURE ANCHOR UNITS**
GUARDRAIL ANCHOR UNIT, TYPE III

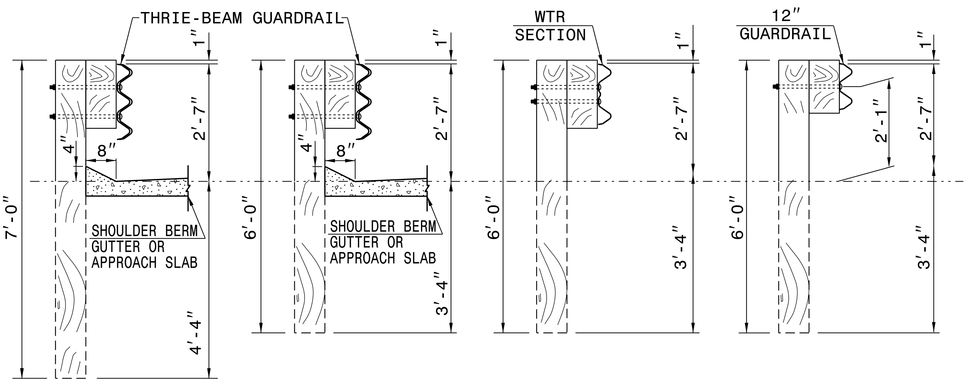


**SECTION OF THRIE BEAM POSTS 1 THRU 6**

**SECTION OF THRIE BEAM POST 7**

**SECTION OF WTR BEAM POST 8**

**SECTION OF 'W' BEAM POST 9**

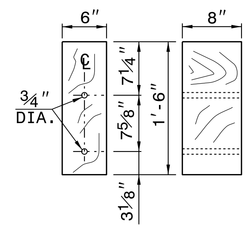


**THRIE BEAM OFFSET BLOCK**

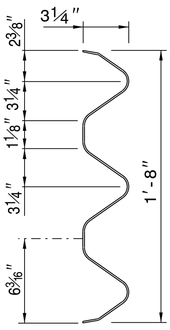


**THRIE-BEAM SECTION**

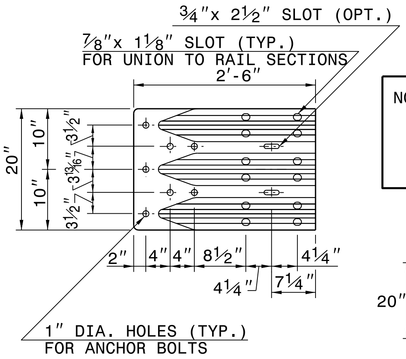


**END SHOE**

NOTE: THE MID POST AND OFFSET BLOCK OF THE WTR SECTION WILL REQUIRE SPECIAL BOLT HOLE DRILLING IN THE THRIE BEAM OFFSET BLOCK AND LINE POST.

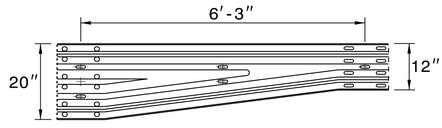


**WTR SECTION**
ELEVATION VIEW

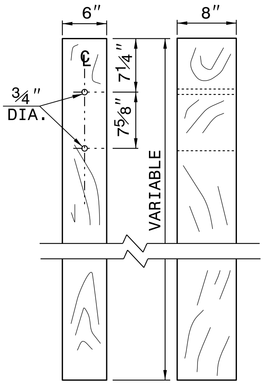


**THRIE BEAM LINE POST**

SHEET 3 OF 7
**862D03**

STATE OF NORTH CAROLINA
DEPT. OF TRANSPORTATION
DIVISION OF HIGHWAYS
RALEIGH, N.C.

ROADWAY DETAIL DRAWING FOR
**STRUCTURE ANCHOR UNITS**
GUARDRAIL ANCHOR UNIT, TYPE III

SHEET 3 OF 7
**862D03**

**SEE TITLE BLOCK**

ORIGINAL BY: J. HOWERTON DATE: 06-22-12
MODIFIED BY: DATE:
CHECKED BY: DATE:
FILE SPEC.:

**CONTRACT STANDARDS AND DEVELOPMENT UNIT**
Office 919-707-6950 FAX 919-250-4119

**DOCUMENT NOT CONSIDERED FINAL UNLESS ALL SIGNATURES COMPLETED**

NORTH CAROLINA PROFESSIONAL SEAL 022966 ENGINEER JAMES S. HOWERTON
3/8/2019

PROJECT REFERENCE NO. 17BP.4.R.70
SHEET NO. 2C-3

DocuSign Envelope ID: 157A5A42-B2EB-4D96-AA46-0030782240B5

DocuSign Envelope ID: 1576A943-B2EB-4096-AAA6-003078224 0B5

| COMPUTED BY: RBH | DATE: 7/30/2018 |
|---|---|
| CHECKED BY: | DATE: |

STATE OF NORTH CAROLINA
DIVISION OF HIGHWAYS

| PROJECT REFERENCE NO. | SHEET NO. |
|---|---|
| B-5997 | 3B-1 |

## SUMMARY OF EARTHWORK (IN CUBIC YARDS)

| STATION | STATION | UNCL. EXCAV. | UNDERCUT EXCAVATION | EMBANK. +% | BORROW | WASTE |
|---|---|---|---|---|---|---|
| -L- 12+00.00 | -L- 13+86.00 BEGIN BRIDGE | 25 | 0 | 248 | 223 | 0 |
| SUBTOTALS: | | 25 | 0 | 248 | 223 | 0 |
| | | | | | | |
| -L- 14+65.00 END BRIDGE | -L- 17+80.08 | 110 | 0 | 134 | 24 | 9 |
| SUBTOTALS: | | 110 | 0 | 134 | 24 | 9 |
| | | | | | | |
| TOTAL: | | 135 | 0 | 382 | 247 | 9 |
| WASTE IN LIEU OF BORROW | | 0 | 0 | 0 | 0 | 0 |
| PROJECT TOTALS: | | 135 | 0 | 382 | 247 | 0 |
| EST. 5% TO REPLACE TOP SOIL ON BORROW PIT | | | | | 12 | |
| GRAND TOTAL: | | 135 | 0 | | 259 | |
| SAY: | | 150 | 0 | | 275 | |

Note: Approximate quantities only. Unclassified Excavation, Shoulder Borrow, Fine Grading, Clearing and Grubbing, Breaking of Existing Pavement, and Removal of Existing Pavement will be paid for at the contract lump sum price for "Grading."

## PAVEMENT REMOVAL SUMMARY

| SURVEY LINE | STATION | STATION | LOCATION LT/RT/CL | AREA (SF) |
|---|---|---|---|---|
| -L- | 12+00.00 | 14+10.00 | CL | 3,883.53 |
| BRIDGE | | | | |
| -L- | 14+45.00 | 16+50.00 | CL | 3,861.00 |
| | | | | |
| | | | | |
| | | | TOTAL (SF) | 7,744.53 |
| | | | TOTAL (SY) | 860.50 |
| | | | SAY: | 865 |

## SHOULDER BERM GUTTER SUMMARY

| SURVEY LINE | STATION | STATION | LOCATION | LENGTH (LF) |
|---|---|---|---|---|
| -L- | 14+65 | 15+20 | LT | 55 |
| | | | | |
| | | | | |
| | | | | |
| | | | | |
| | | | TOTAL: | 55 |
| | | | | |
| | | | SAY: | 60 |

"N" = DISTANCE FROM EDGE OF LANE TO FACE OF GUARDRAIL.
TOTAL SHOULDER WIDTH = DISTANCE FROM EDGE OF TRAVEL LANE TO SHOULDER BREAK POINT.
FLARE LENGTH = DISTANCE FROM LAST SECTION OF PARALLEL GUARDRAIL TO END OF GUARDRAIL.
W = TOTAL WIDTH OF FLARE FROM BEGINNING OF TAPER TO END OF GUARDRAIL.
G = GATING IMPACT ATTENUATOR TYPE 350
NG = NON-GATING IMPACT ATTENUATOR TYPE 350

## GUARDRAIL SUMMARY

| SURVEY LINE | BEG. STA. | END STA. | LOCATION | LENGTH (LF) | | | WARRANT POINT | | "N" DIST. FROM E.O.L. | TOTAL SHOUL. WIDTH | FLARE LENGTH | | W | | ANCHORS (EACH) | | | | | | | | | IMPACT ATTENUATOR TYPE 350 | | | SINGLE FACED BARRIER | REMOVE EXISTING GUARDRAIL | REMOVE AND RESET EXISTING GUARDRAIL | REMARKS |
|---|---|---|---|---|---|---|---|---|---|---|---|---|---|---|---|---|---|---|---|---|---|---|---|---|---|---|---|---|---|---|
| | | | | STRAIGHT | SHOP CURVED | DOUBLE FACED | APPROACH END | TRAILING END | | | APPROACH END | TRAILING END | APPROACH END | TRAILING END | XI MOD | GREU TL-2 | GREU TL-3 | TEMP. W-BEAM | | CAT-1 | TYPE III | B-77 | AT-1 | EA | G | NG | | | | |
| -L- | 13+15.63 | 13+96.88 | LT | 81.25 | | | | 13+15.63 | | | | 50' | | 1' | | | 1 | | | | 1 | | | | | | | | | |
| -L- | 13+15.63 | 13+96.88 | RT | 81.25 | | | 13+15.63 | | | | 50' | | 1' | | | | 1 | | | | 1 | | | | | | | | | |
| -L- | 14+54.13 | 15+60.38 | LT | 106.25 | | | 14+54.13 | | | | 50' | | 1' | | | | 1 | | | | 1 | | | | | | | | | GUARDRAIL LENGTH INCREASED DUE TO DRAINAGE DESIGN |
| -L- | 14+54.13 | 15+35.38 | RT | 81.25 | | | | 14+54.13 | | | | 50' | | 1' | | | 1 | | | | 1 | | | | | | | | | |
| | | | | | | | | | | | | | | | | | | | | | | | | | | | | | | |
| | | PROJECT TOTALS | | 350.00 | | | | | | | | | | | | | 4 | | | | 4 | | | | | | | | | |
| | | ANCHOR DEDUCTIONS | | | | | | | | | | | | | | | | | | | | | | | | | | | | |
| | | GREU TL-3 @ 50' EACH = | | 200.00 | | | | | | | | | | | | | | | | | | | | | | | | | | |
| | | CAT-1 @ 6.25' EACH = | | | | | | | | | | | | | | | | | | | | | | | | | | | | |
| | | B-77 @ 22.875' EACH = | | | | | | | | | | | | | | | | | | | | | | | | | | | | |
| | | TYPE III @ 18.75' EACH = | | 75.00 | | | | | | | | | | | | | | | | | | | | | | | | | | |
| | | | GRAND TOTALS | 75.00 | | | | | | | | | | | | | 4 | | | | 4 | | | | | | | | | |
| | | | SAY | 100.00 | | | | | | | | | | | | | | | | | | | | | | | | | | |

ADDITIONAL GUARDRAIL POSTS = 5

DocuSign Envelope ID: 1576A943-B2EB-4096-AAA6-0030782240B5

EMARTIN-7

| COMPUTED BY: | Ecological Engineering | DATE: | 09/17/2018 |
|---|---|---|---|
| CHECKED BY: | Brandon Barham, PE | DATE: | 09/17/2018 |

| PROJECT NO. | SHEET NO. |
|---|---|
| B-5977 | 3D-1 |

# NORTH CAROLINA DEPARTMENT OF TRANSPORTATION
# DIVISION OF HIGHWAYS

**Note: Invert Elevations indicated are for Bid Purposes only and shall not be used for project construction stakeout.
See "Standard Specifications For Roads and Structures, Section 300-5".**

## *LIST OF PIPES, ENDWALLS, ETC. (FOR PIPES 48 INCHES & UNDER)*

| LINE & STATION / SIZE / THICKNESS OR GAUGE | OFFSET | STRUCTURE NUMBER FROM | STRUCTURE NUMBER TO | TOP ELEVATION FT. | INVERT ELEVATION FT. | INVERT ELEVATION FT. | MINIMUM REQUIRED SLOPE % | Drainage Pipe (RCP, CSP, CAAP, HDPE, or PVC) 12 | 15 | 18 | 24 | 30 | 36 | 42 | DO NOT USE RCP | DO NOT USE CSP | DO NOT USE CAAP | DO NOT USE HDPE | DO NOT USE PVC | C. S. PIPE 12 .064 | 15 .064 | 18 .064 | 24 .064 | 30 .079 | 36 .079 |
|---|---|---|---|---|---|---|---|---|---|---|---|---|---|---|---|---|---|---|---|---|---|---|---|---|---|
| L 14+75 | 15 LT | 0401 | | 153.7 | | | | | | | | | | | | | | | | | | | | | |
| | | 0401 | 0402 | | 150.9 | 150.6 | | | | | | | | | | | | | | | | | | | |
| L 15+15 | 15 LT | 0402 | | 153.4 | | | | | | | | | | | | | | | | | | | | | |
| | | 0402 | 0403 | | 150.6 | 150.2 | | | 20 | | | | | | | | | | | | | | | | |
| | | 0404 | | | | | | | | | | | | | | | | | | | | | | | |
| | | 0404 | 0405 | | Ex | 151.5 | | | | | | | | | | | | | | | | | | | |
| SHEET TOTALS | | | | | | | | | 20 | | | | | | | | | | | | | | | | |
| PROJECT TOTALS | | | | | | | | | 20 | | | | | | | | | | | | | | | | |

| LINE & STATION | STRUCTURE FROM | STRUCTURE TO | R. C. PIPE CLASS III 12 | 15 | 18 | 24 | 30 | 36 | 42 | 48 | 54 | 60 | R. C. PIPE CLASS IV 12 | 15 | 18 | 24 | 30 | 36 | 42 | ENDWALLS STD. 838.01 OR STD. 838.11 (UNLESS NOTED OTHERWISE) CY | REINFORCED ENDWALLS CY | DRAINAGE STRUCTURE MASONRY CY | QUANTITIES FOR DRAINAGE STRUCTURES (NOTE: TOTAL LIN. FT. FOR PAY QUANTITY SHALL BE A + (1.3 X B)) 0' THRU 5' EACH | A 5' THRU 10' LIN. FT. | B 10' AND ABOVE LIN. FT. | C.B. STD. 840.01 OR STD. 840.02 | FRAME, GRATES, AND HOOD STD. 840.03 GRATE TYPE E | F | G | | CONCRETE TRANSITIONAL SECTION |
|---|---|---|---|---|---|---|---|---|---|---|---|---|---|---|---|---|---|---|---|---|---|---|---|---|---|---|---|---|---|---|---|
| L 14+75 | 0401 | | | | | | | | | | | | | | | | | | | | | | 1 | | | | | | | | |
| | 0401 | 0402 | | 36 | | | | | | | | | | | | | | | | | | | | | | | | | | | |
| L 15+15 | 0402 | | | | | | | | | | | | | | | | | | | | | | 1 | | | | | | | | |
| | 0402 | 0403 | | | | | | | | | | | | | | | | | | | | | | | | | | | | | |
| | 0404 | | | | | | | | | | | | | | | | | | | | | | | | | | | | | | |
| | 0404 | 0405 | | | | | 16 | | | | | | | | | | | | | | | | | | | | | | | | |
| SHEET TOTALS | | | | 36 | | | 16 | | | | | | | | | | | | | | | | 2 | | | | | | | | |
| PROJECT TOTALS | | | | 36 | | | 16 | | | | | | | | | | | | | | | | 2 | | | | | | | | |

| LINE & STATION | STRUCTURE FROM | STRUCTURE TO | D.I. STD. 852.04 OR STD. 852.06 | C.B. STD. 852.05 | OPEN THROAT C.B. STD. 840.04 OR STD. 840.05 | CONCRETE BRIDGE APPROACH D.I. STD. 840.13 | D.I. STD. 840.14 OR STD. 840.15 | D.I. FRAME AND GRATES STD. 840.16 | G.D.I. TYPE "A" STD. 840.17 OR STD. 840.26 | G.D.I. TYPE "B" STD. 840.18 OR STD. 840.27 | G.D.I. TYPE "D" STD. 840.19 OR STD. 840.28 | G.D.I. (N.S. SAG) FRAME W/ 2 GRATES STD. 840.24 | G.D.I. (N.S. FLAT) FRAME W/ GRATE STD. 840.29 | G.D.I. (N.S. FLAT) FRAME W/ 2 GRATES STD. 840.29 | DRIVEWAY D.I. STD. 840.30 | FRAME W/ GRATE FOR DRIVEWAY STD. 840.30 | J.B. STD. 840.31 OR STD. 840.32 | ANGLED VANE GRATES AND FRAMES STD. 840.33 | T.B.J.B. STD. 840.34 | T.B.D.I. STD. 840.35 | T.B.D.I. FOR STEEL GRATES STD. 840.36 | STEEL FRAME WITH TWO GRATES STD. 840.37 | TEMP STEEL PLATE COVER MASONRY DRAINAGE | M.H. STD. 840.51, STD. 840.52, OR STD. 840.53 | 15" C.S. ELBOW | 18" C.S. ELBOW | 24" C.S. ELBOW | 30" C.S. ELBOW | 36" C.S. ELBOW | BERM DITCH OUTLET STD. 850.10 (PER EACH) | BERM DITCH OUTLET STD. 850.11 (PER EACH) | FLOWABLE FILL CY | CONCRETE COLLARS CL. "B" STD. 840.72 CY | CONCRETE AND BRICK PIPE PLUG STD. 840.71 CY | PIPE REMOVAL LIN. FT. | REMARKS |
|---|---|---|---|---|---|---|---|---|---|---|---|---|---|---|---|---|---|---|---|---|---|---|---|---|---|---|---|---|---|---|---|---|---|---|---|---|
| L 14+75 | 0401 | | | | | | | | | 1 | | | | 1 | | | | | | | | | | | | | | | | | | | | | | |
| | 0401 | 0402 | | | | | | | | | | | | | | | | | | | | | | | | | | | | | | | | | | |
| L 15+15 | 0402 | | | | | | | | | 1 | | 1 | | | | | | | | | | | | | | | | | | | | | | | | |
| | 0402 | 0403 | | | | | | | | | | | | | | | | | | | | | | | | | | | | | | | | | | |
| | 0404 | | | | | | | | | | | | | | | | | | | | | | | | | | | | | | | | 0.6560 | | | |
| | 0404 | 0405 | | | | | | | | | | | | | | | | | | | | | | | | | | | | | | | | | | |
| SHEET TOTALS | | | | | | | | | | 2 | | 1 | | 1 | | | | | | | | | | | | | | | | | | | 0.6560 | | | |
| PROJECT TOTALS | | | | | | | | | | 2 | | 1 | | 1 | | | | | | | | | | | | | | | | | | | 0.6560 | | | |

**ABBREVIATIONS**

- C.A.A. CORRUGATED ALUMINIUM ALLOY
- C.B. CATCH BASIN
- C.S. CORRUGATED STEEL
- D.I. DROP INLET
- G.D.I. GRATED DROP INLET
- H.D.P.E. HIGH DENSITY POLYETHYLENE
- J.B. JUNCTION BOX
- M.H. MANHOLE
- N.S. NARROW SLOT
- P.V.C. POLYVINYL CHLORIDE
- R.C. REINFORCED CONCRETE
- T.B.D.I. TRAFFIC BEARING DROP INLET
- T.B.J.B. TRAFFIC BEARING JUNCTION BOX
- W.S. WIDE SLOT

DocuSign Envelope ID: 1576A943-B2EB-4096-AAA6-003078224 0B5

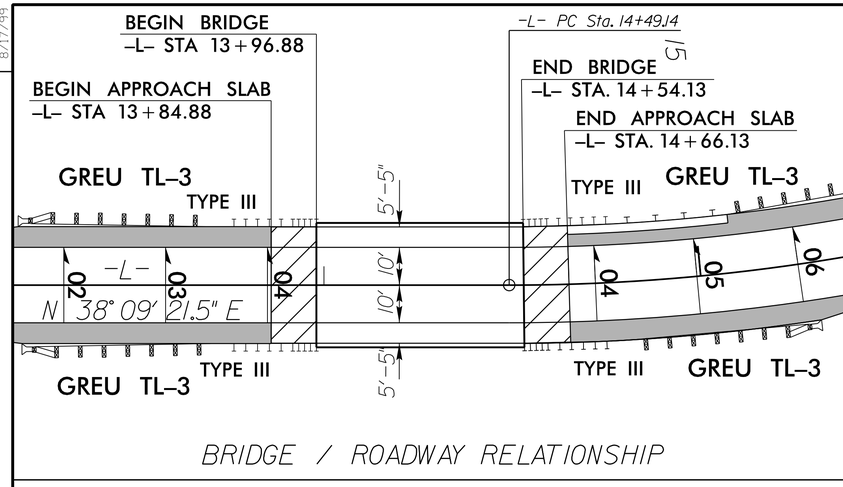


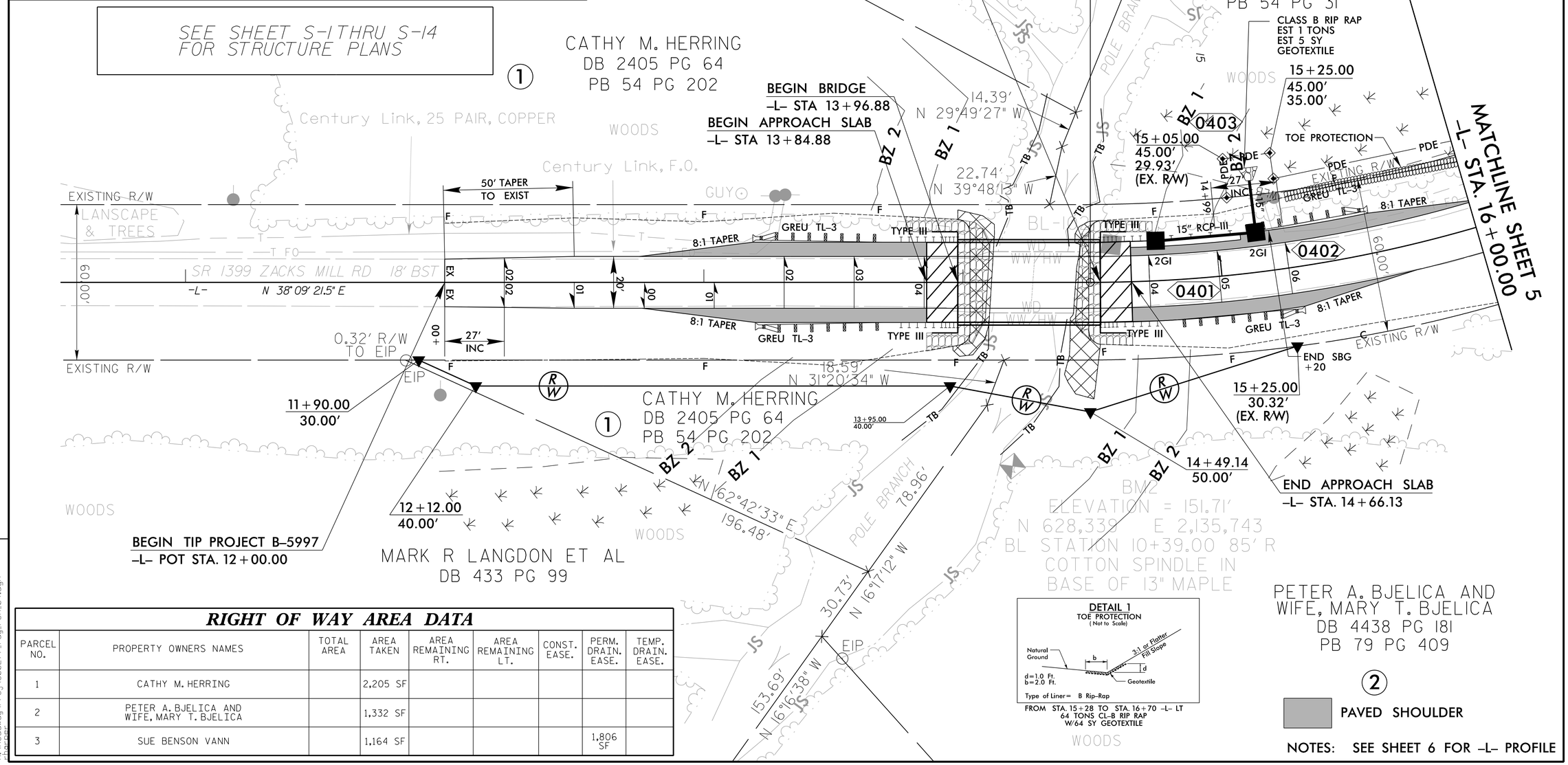


CALYX
ENGINEERS + CONSULTANTS
6750 TRYON ROAD
CARY, NC 27518
phone: 919.851.1912
CALYXengineers.com
NC License # F-1333

| PROJECT REFERENCE NO. | SHEET NO. |
|---|---|
| B-5997 | 4 |
| R/W SHEET NO. | |

ROADWAY DESIGN ENGINEER — NORTH CAROLINA PROFESSIONAL ENGINEER SEAL 15769 STEPHEN C. BROWNELL — Docu Signed by: 1/8/2019

HYDRAULICS ENGINEER — NORTH CAROLINA PROFESSIONAL ENGINEER SEAL 20147 FRANK F. FLEMING — Docu Signed by: 1/8/2019

**DOCUMENT NOT CONSIDERED FINAL UNLESS ALL SIGNATURES COMPLETED**

REVISIONS

8/17/99

## RIGHT OF WAY AREA DATA

| PARCEL NO. | PROPERTY OWNERS NAMES | TOTAL AREA | AREA TAKEN | AREA REMAINING RT. | AREA REMAINING LT. | CONST. EASE. | PERM. DRAIN. EASE. | TEMP. DRAIN. EASE. |
|---|---|---|---|---|---|---|---|---|
| 1 | CATHY M. HERRING | | 2,205 SF | | | | | |
| 2 | PETER A. BJELICA AND WIFE, MARY T. BJELICA | | 1,332 SF | | | | | |
| 3 | SUE BENSON VANN | | 1,164 SF | | | | 1,806 SF | |

3/5/2019
R:\Roadway\Proj\500277_rdy_PSH_04.dgn

DocuSign Envelope ID: 1576A943-B2EB-4096-AAA6-003078224 0B5

8/17/99

REVISIONS

-L-

PI Sta 16+20.14
△ = 35° 34′ 30.4″ (LT)
D = 10° 44′ 58.8″
L = 330.94′
T = 171.00′
R = 533.00′
DS = 40 mph
Se = 06

PI Sta 18+27.87
△ = 5° 40′ 24.1″ (LT)
D = 5° 56′ 27.8″
L = 95.49′
T = 47.79′
R = 964.41′
DS = EXIST
Se = EXIST

## DETAIL 2
STANDARD BASE DITCH
( Not to Scale)

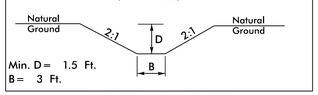


Min. D = 1.5 Ft.
B = 3 Ft.

STA 17+98.00 -L- LT

## DETAIL 3
SPECIAL CUT DITCH
( Not to Scale)

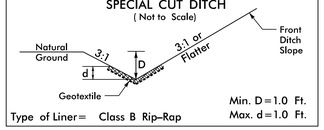


Type of Liner= Class B Rip-Rap
Min. D = 1.0 Ft.
Max. d = 1.0 Ft.

FROM STA 18+00 TO STA 18+75 -L- LT
EST 71 TONS CL-B RIP RAP
EST 50 SY GEOTEXTILE

CALYX
ENGINEERS + CONSULTANTS
6750 TRYON ROAD
CARY, NC 27518
phone: 919.851.1912
CALYXengineers.com
NC License # F-1333

| PROJECT REFERENCE NO. | SHEET NO. |
|---|---|
| B-5997 | 5 |
| R/W SHEET NO. | |

ROADWAY DESIGN ENGINEER
NORTH CAROLINA PROFESSIONAL SEAL 15759 ENGINEER STEPHEN C. BROOD
Docu Sign Envelope ID: 0A7E121E-1B9C-4C3E-
3/8/2019

HYDRAULICS ENGINEER
NORTH CAROLINA PROFESSIONAL SEAL 20147 ENGINEER FRANK F. FLEMING
Docu Sign Envelope ID: 19BC0BBE-
3/8/2019

**DOCUMENT NOT CONSIDERED FINAL UNLESS ALL SIGNATURES COMPLETED**

NAD 83/NA 2011

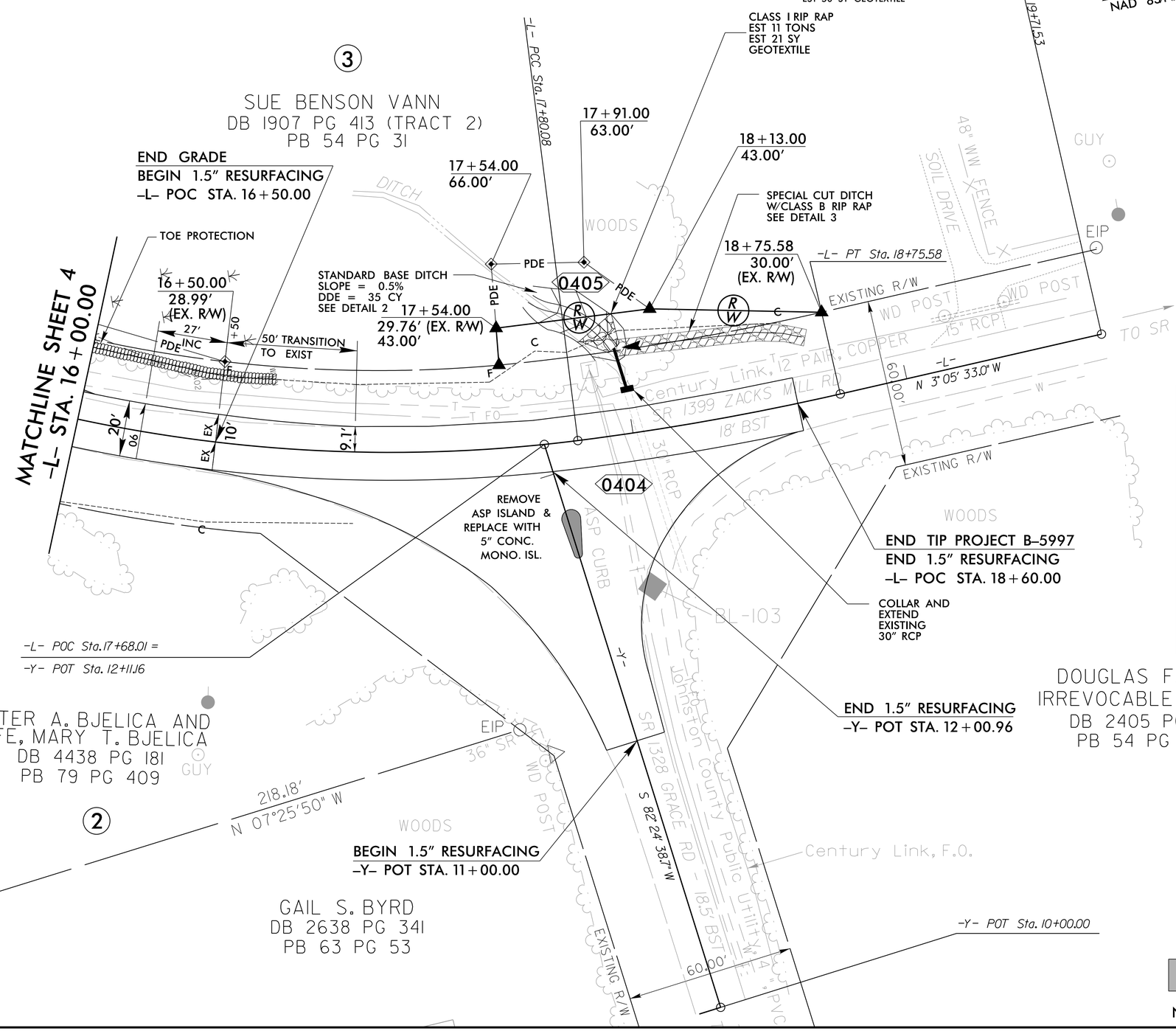


## DETAIL 1
TOE PROTECTION
( Not to Scale)

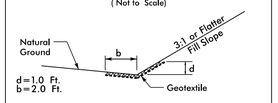


d = 1.0 Ft.
b = 2.0 Ft.

Type of Liner= B Rip-Rap

FROM STA. 15+28 TO STA. 16+70 -L- LT
CLASS B RIP RAP EST 64 TONS
EST 64 SY GEOTEXTILE

## DETAIL FOR 5" CONC. MONOLITHIC ISLAND

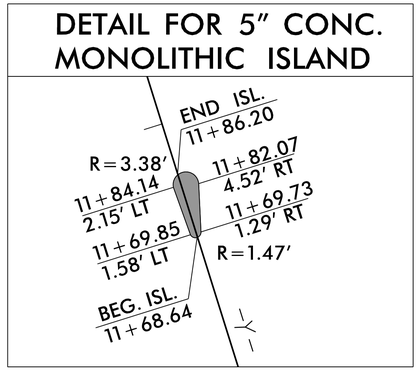


PAVED SHOULDER

NOTES: SEE SHEET 6 FOR -L- PROFILE

3/5/2019
R:\Roadway\Proj\500277_rdy_PSH_05.dgn

DocuSign Envelope ID: 1576A943-B2EB-4096-AAA6-003078224 0B5

5/28/99

| PROJECT REFERENCE NO. | SHEET NO. |
|---|---|
| B-5997 | 6 |

CALYX ENGINEERS + CONSULTANTS
6750 TRYON ROAD
CARY, NC 27518
phone: 919.851.1912
CALYXengineers.com
NC License # F-1333

ROADWAY DESIGN ENGINEER
NORTH CAROLINA PROFESSIONAL SEAL ENGINEER STEPHEN C. BRONICE 045159
Docu Sign Envelope ID: 1576A943-B2EB-4096-AAA6-003078224 0B5
3/8/2019

HYDRAULICS ENGINEER
NORTH CAROLINA PROFESSIONAL SEAL ENGINEER FRANK FLEMING 20147
Docu Sign Envelope ID: 1576A943-B2EB-4096-AAA6-003078224 0B5
3/8/2019

**DOCUMENT NOT CONSIDERED FINAL UNLESS ALL SIGNATURES COMPLETED**

## BRIDGE HYDRAULIC DATA

| | | |
|---|---|---|
| DESIGN DISCHARGE | = 650 | CFS |
| DESIGN FREQUENCY | = 25 | YR |
| DESIGN HW ELEVATION | = 149.2 | FT |
| BASE DISCHARGE | = 1183 | CFS |
| BASE FREQUENCY | = 100 | YR |
| BASE HW ELEVATION | = 150.9 | FT |
| OVERTOPPING DISCHARGE | = 2802 | CFS |
| OVERTOPPING FREQUENCY | = 500+ | YR |
| OVERTOPPING ELEVATION | = 154.8 | FT |
| DATE OF SURVEY | = 2/21/2018 | |
| W.S. ELEVATION AT DATE OF SURVEY | = 148.0 | FT |

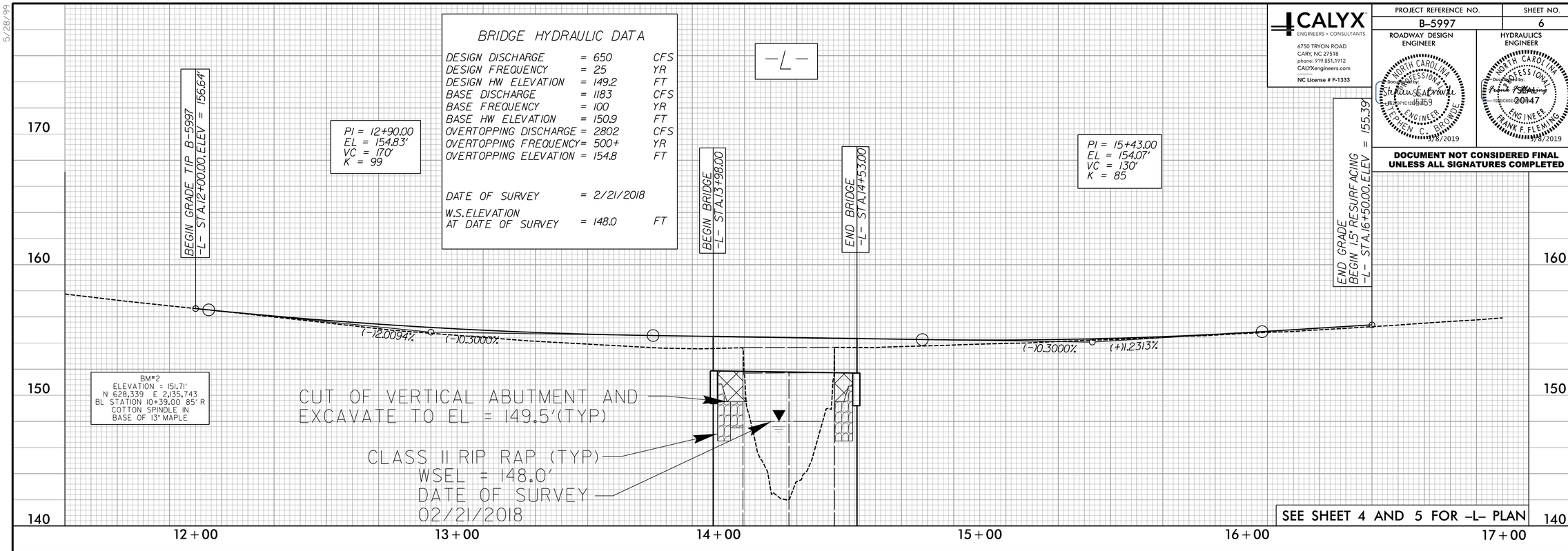


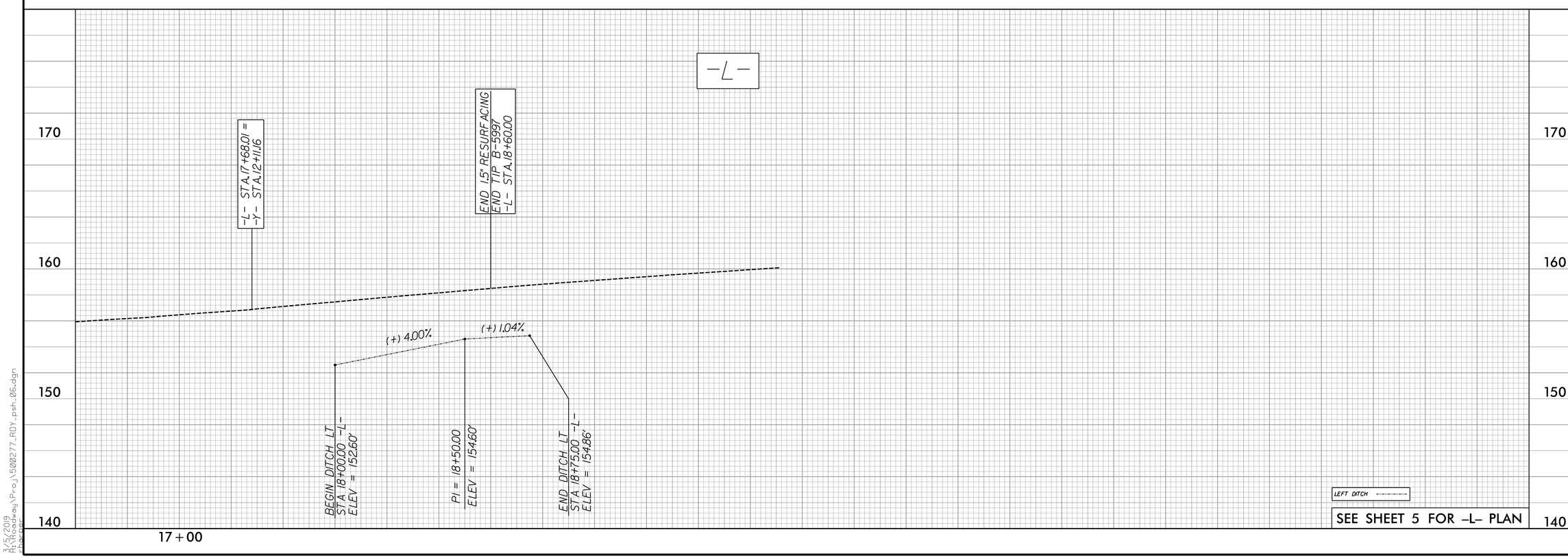


3/5/2019
R:\Roadway\Proj\5100277_RDY_psh_06.dgn
charper

DocuSign Envelope ID: 1576A943-B2EB-4096-AAA6-003078224 0B5

| PROJ. REFERENCE NO. | SHEET NO. |
|---|---|
| B-5997 | TMP-1 |

# ROADWAY STANDARD DRAWINGS

THE FOLLOWING ROADWAY STANDARDS AS SHOWN IN "ROADWAY STANDARD DRAWINGS" - N.C. DEPARTMENT OF TRANSPORTATION - RALEIGH, N.C., DATED JANUARY 2018 ARE APPLICABLE TO THIS PROJECT AND BY REFERENCE HEREBY ARE CONSIDERED A PART OF THESE PLANS:

| STD. NO. | TITLE |
|---|---|
| 1101.03 | TEMPORARY ROAD CLOSURES |
| 1110.01 | STATIONARY WORK ZONE SIGNS |
| 1145.01 | BARRICADES |
| 1205.01 | PAVEMENT MARKINGS - LINE TYPES AND OFFSETS |
| 1205.02 | PAVEMENT MARKINGS - TWO LANE AND MULTILANE ROADWAYS |
| 1205.12 | PAVEMENT MARKINGS - BRIDGES |
| 1261.01 | GUARDRAIL AND BARRIER DELINEATORS - INSTALLATION SPACING |
| 1261.02 | GUARDRAIL AND BARRIER DELINEATORS - TYPES AND MOUNTING |
| 1262.01 | GUARDRAIL END DELINEATION |

# PHASING

STEP 1: USING ROADWAY STANDARD DRAWING NO. 1101.03, SHEET 1 OF 9, AND SHEET TMP-2, PERFORM THE FOLLOWING:
- INSTALL ALL ROAD CLOSURE AND DETOUR SIGNING INCLUDING BARRICADES
- CLOSE SR 1399 (ZACKS MILL ROAD)
- PLACE TRAFFIC ONTO OFF-SITE DETOUR

STEP 2: REMOVE EXISTING BRIDGE #277 AND CONSTRUCT THE PROPOSED BRIDGE AND APPROACHES AS SHOWN IN THE CONSTRUCTION PLANS.

STEP 3: INSTALL FINAL PAVEMENT MARKINGS.

STEP 4: REMOVE ALL TRAFFIC CONTROL SIGNING AND DEVICES AND RE-OPEN SR 1399 (ZACKS MILL ROAD) TO THE FINAL TRAFFIC PATTERN.

# LEGEND

## GENERAL

- DIRECTION OF TRAFFIC FLOW
- DIRECTION OF PEDESTRIAN TRAFFIC FLOW
- EXIST. PVMT.
- NORTH ARROW
- PROPOSED PVMT.
- TEMP. SHORING (LOCATION PURPOSES ONLY)
- WORK AREA
- REMOVAL
- USER DEFINED (IF NEEDED)
- USER DEFINED (IF NEEDED)

## SIGNALS

- EXISTING
- PROPOSED
- TEMPORARY

## PAVEMENT MARKINGS

- EXISTING LINES
- TEMPORARY LINES

## TRAFFIC CONTROL DEVICES

- BARRICADE (TYPE III)
- CONE
- DRUM — SKINNY DRUM — TUBULAR MARKER
- TEMPORARY CRASH CUSHION
- FLASHING ARROW BOARD
- FLAGGER
- LAW ENFORCEMENT
- TRUCK MOUNTED ATTENUATOR (TMA)
- CHANGEABLE MESSAGE SIGN

## TEMPORARY SIGNING

- PORTABLE SIGN
- STATIONARY SIGN
- STATIONARY OR PORTABLE SIGN

## PAVEMENT MARKERS

- CRYSTAL/CRYSTAL
- CRYSTAL/RED
- YELLOW/YELLOW

## PAVEMENT MARKING SYMBOLS

- PAVEMENT MARKING SYMBOLS

# GENERAL NOTES

CHANGES MAY BE REQUIRED WHEN PHYSICAL DIMENSIONS IN THE DETAIL DRAWINGS, STANDARD DETAILS, AND ROADWAY DETAILS ARE NOT ATTAINABLE TO MEET FIELD CONDITIONS OR RESULT IN DUPLICATE OR UNDESIRED OVERLAPPING OF DEVICES. MODIFICATION MAY INCLUDE: MOVING, SUPPLEMENTING, COVERING, OR REMOVAL OF DEVICES AS DIRECTED BY THE ENGINEER.

THE FOLLOWING GENERAL NOTES APPLY AT ALL TIMES FOR THE DURATION OF THE CONSTRUCTION PROJECT EXCEPT WHEN OTHERWISE NOTED IN THE PLAN OR DIRECTED BY THE ENGINEER.

TRAFFIC PATTERN ALTERATIONS

A) NOTIFY THE ENGINEER THIRTY (30) CALENDAR DAYS PRIOR TO ANY TRAFFIC PATTERN ALTERATION.

SIGNING

B) PROVIDE SIGNING AND DEVICES REQUIRED TO CLOSE THE ROAD ACCORDING TO THE ROADWAY STANDARD DRAWINGS AND TRAFFIC CONTROL PLANS. PROVIDE SIGNING REQUIRED FOR THE OFF-SITE DETOUR ROUTE AS SHOWN IN THE TRAFFIC CONTROL PLANS.

C) COVER OR REMOVE ALL SIGNS AND DEVICES REQUIRED TO CLOSE THE ROAD WHEN ROAD CLOSURE IS NOT IN OPERATION.

COVER OR REMOVE ALL SIGNS REQUIRED FOR THE OFF-SITE DETOUR WHEN THE DETOUR IS NOT IN OPERATION.

D) ENSURE ALL NECESSARY SIGNING IS IN PLACE PRIOR TO ALTERING ANY TRAFFIC PATTERN.

TRAFFIC CONTROL DEVICES

E) PLACE TYPE III BARRICADES, WITH "ROAD CLOSED" SIGN R11-2 ATTACHED, OF SUFFICIENT LENGTH TO CLOSE ENTIRE ROADWAY.

PAVEMENT MARKINGS AND MARKERS

F) INSTALL PAVEMENT MARKINGS ON THE FINAL SURFACE AS FOLLOWS:

| ROAD NAME | MARKING | MARKER |
|---|---|---|
| SR 1399 | PAINT | NONE |

G) TIE PROPOSED PAVEMENT MARKING LINES TO EXISTING PAVEMENT MARKING LINES.

H) REMOVE/REPLACE ANY CONFLICTING/DAMAGED PAVEMENT MARKINGS AND MARKERS BY THE END OF EACH DAY'S OPERATION.

I) PASSING ZONE WILL BE DETERMINED IN THE FIELD AND MUST BE APPROVED BY THE ENGINEER.

APPROVED: _____

DATE: _____

SEAL

NORTH CAROLINA PROFESSIONAL SEAL 019661 ENGINEER KEVIN AUSTIN

Digitally signed by Kevin Austin
DN: cn=Kevin Austin, c=US, o=CALYX Engineers, ou=Engineering, email=kevin.austin@calyxengineers.com
Date: 2019.03.27 08:44:48 -04'00'

3/27/2019

**DOCUMENT NOT CONSIDERED FINAL UNLESS ALL SIGNATURES COMPLETED**

CALYX ENGINEERS + CONSULTANTS
6750 TRYON ROAD
CARY, NC 27518
phone: 919.851.1912
CALYXengineers.com
NC License # F-1333

ROADWAY STANDARD DRAWINGS & LEGEND

3/27/2019
R:\Traffic\TrafficControl\TCP\B5997_TMP_500277.dgn
User:wallen

DocuSign Envelope ID: 1576A943-B2EB-4096-AAA6-003078224 0B5

| PROJ. REFERENCE NO. | SHEET NO. |
|---|---|
| B-5997 | TMP-2 |

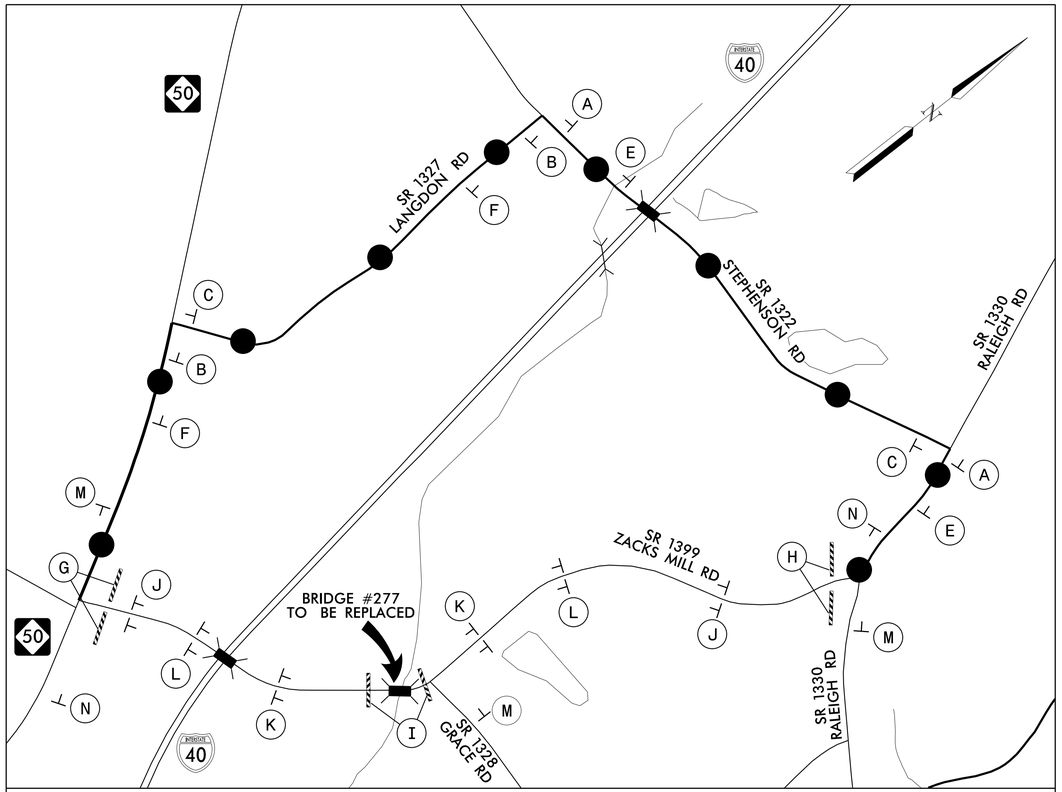


DETOUR ROUTE (APPROXIMATE LENGTH = 8 MILES)

* SEE SHEET SD-1 FOR SPECIAL SIGN DESIGN

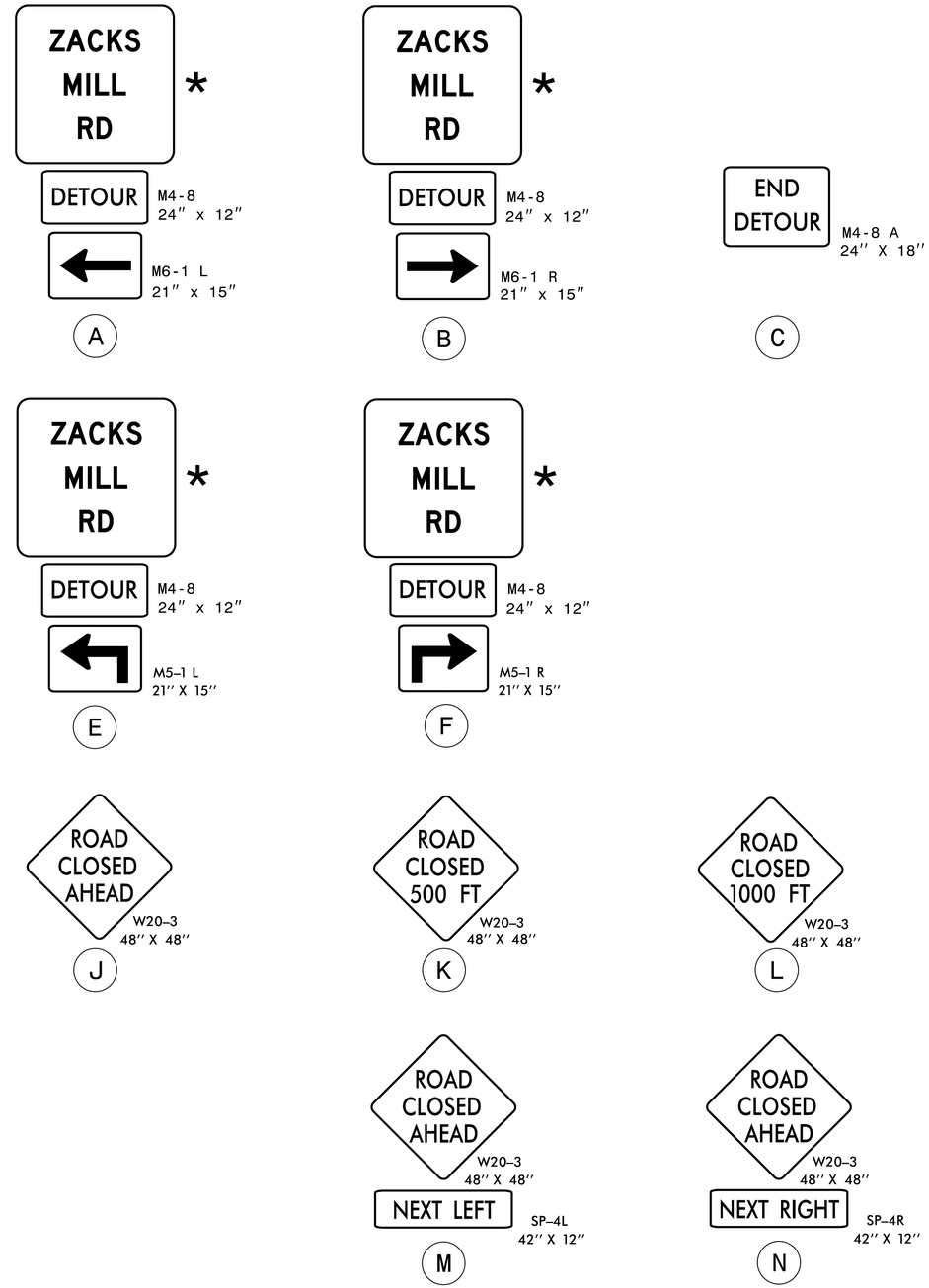


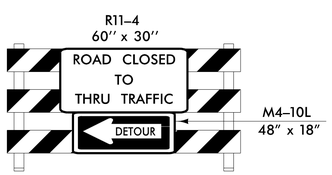


TYPE III BARRICADE

G

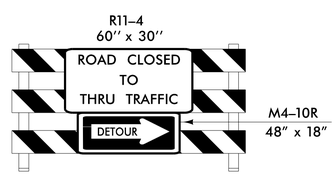


TYPE III BARRICADE

H

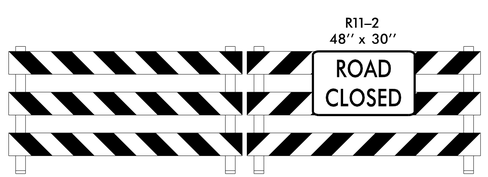


TYPE III BARRICADE(S)

I

APPROVED: _____

DATE: _____

SEAL

NORTH CAROLINA PROFESSIONAL ENGINEER SEAL 019861 L. KEVIN AUSTIN

DocuSigned by: L. Kevin Austin 7284B372BE4A4BD...

3/8/2019

**DOCUMENT NOT CONSIDERED FINAL UNLESS ALL SIGNATURES COMPLETED**

CALYX
ENGINEERS + CONSULTANTS
6750 TRYON ROAD
CARY, NC 27518
phone: 919.851.1912
CALYXengineers.com
NC License # F-1333

TRAFFIC MANAGEMENT PLAN

3/5/2019
R:\Traffic\TrafficControl\TCP\B5997_TMP_500277.dgn
User:wallen

DocuSign Envelope ID: 1576A943-B2EB-4096-AAA6-003078224 0B5

| PROJ. REFERENCE NO. | SHEET NO. |
|---|---|
| B-5997 | SD-1 |

SIGN DETAIL
1:20

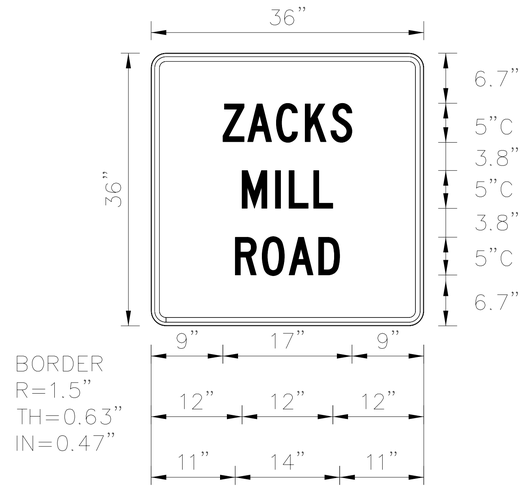


BORDER
R=1.5"
TH=0.63"
IN=0.47"

| | | |
|---|---|---|
| SIGN NUMBER | name | |
| WIDTH x HGHT. | 3'-0" x 3'-0" | |
| BORDER WIDTH | 0.63" | |
| CORNER RADIUS | 1.5" | |
| MOUNTING | Ground | |
| BACKGROUND | TYPE: | Reflective |
| | COLOR: | Orange |
| LEGEND/BORDER | TYPE: | Non-reflective |
| | COLOR: | Black/Black |

| SYMBOL | ROT | X | Y | WID | HT |
|---|---|---|---|---|---|
| | | | | | |
| | | | | | |
| | | | | | |
| | | | | | |
| | | | | | |
| | | | | | |
| | | | | | |

Panel Style: construction_guide.ssi
Dimensions are inches.tenths

Letter locations are panel edge to lower left corner

| LETTER POSITIONS (X) | | | | | | | | | | | | | | | | | | | | | LENGTH | SERIES/SIZE |
|---|---|---|---|---|---|---|---|---|---|---|---|---|---|---|---|---|---|---|---|---|---|---|
| Z | A | C | K | S | | | | | | | | | | | | | | | | | | C 2000 |
| 9.5 | 12.7 | 16.5 | 20.3 | 23.7 | | | | | | | | | | | | | | | | | 17.1 | 5 |
| M | I | L | L | | | | | | | | | | | | | | | | | | | C 2000 |
| 12 | 16.4 | 18.2 | 21.5 | | | | | | | | | | | | | | | | | | 12 | 5 |
| R | O | A | D | | | | | | | | | | | | | | | | | | | C 2000 |
| 11.1 | 14.7 | 18.2 | 22.1 | | | | | | | | | | | | | | | | | | 13.8 | 5 |
| | | | | | | | | | | | | | | | | | | | | | | |
| | | | | | | | | | | | | | | | | | | | | | | |
| | | | | | | | | | | | | | | | | | | | | | | |
| | | | | | | | | | | | | | | | | | | | | | | |
| | | | | | | | | | | | | | | | | | | | | | | |
| | | | | | | | | | | | | | | | | | | | | | | |
| | | | | | | | | | | | | | | | | | | | | | | |
| | | | | | | | | | | | | | | | | | | | | | | |

APPROVED: _____

DATE: _____

SEAL

3/8/2019

NORTH CAROLINA PROFESSIONAL SEAL 045103 ENGINEER VICTORIA GUIDANTE

DOCUMENT NOT CONSIDERED FINAL
UNLESS ALL SIGNATURES COMPLETED

CALYX
ENGINEERS + CONSULTANTS

6750 TRYON ROAD
CARY, NC 27518
phone: 919.851.1912
CALYXengineers.com
NC License # F-1333

SPECIAL SIGN DESIGN

3/5/2019
R:\Traffic\TrafficControl\TCP\B5997_TMP_SDI_500277.dgn
User:wallen

DocuSign Envelope ID: 1576A943-B2EB-4096-AAA6-003078224 0B5

# TIP PROJECT: B-5997

| STATE | STATE PROJECT REFERENCE NO. | SHEET NO. | TOTAL SHEETS |
|---|---|---|---|
| N.C. | B-5997 | EC-1 | |

| STATE PROJ. NO. | F.A. PROJ. NO. | DESCRIPTION |
|---|---|---|
| 17.BP.4.R.100 | | |

# STATE OF NORTH CAROLINA
# DIVISION OF HIGHWAYS

## PLAN FOR PROPOSED
## HIGHWAY EROSION CONTROL

## *JOHNSTON COUNTY*

*LOCATION: BRIDGE NO. 277 OVER POLE BRANCH ON SR 1399 (ZACKS MILL RD)*

*TYPE OF WORK: GRADING, DRAINAGE, PAVING, AND STRUCTURE*

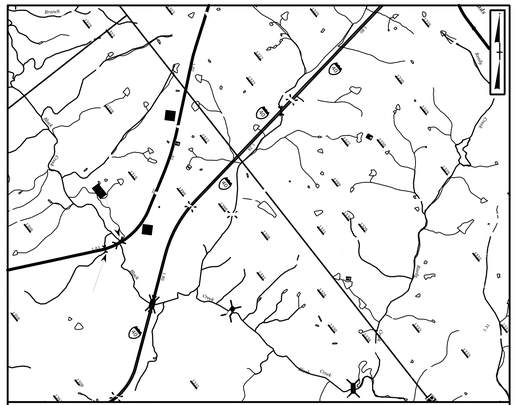

VICINITY MAP
(NOT TO SCALE)
DETOUR ROUTE (APPROXIMATE LENGTH = 8 MILES)

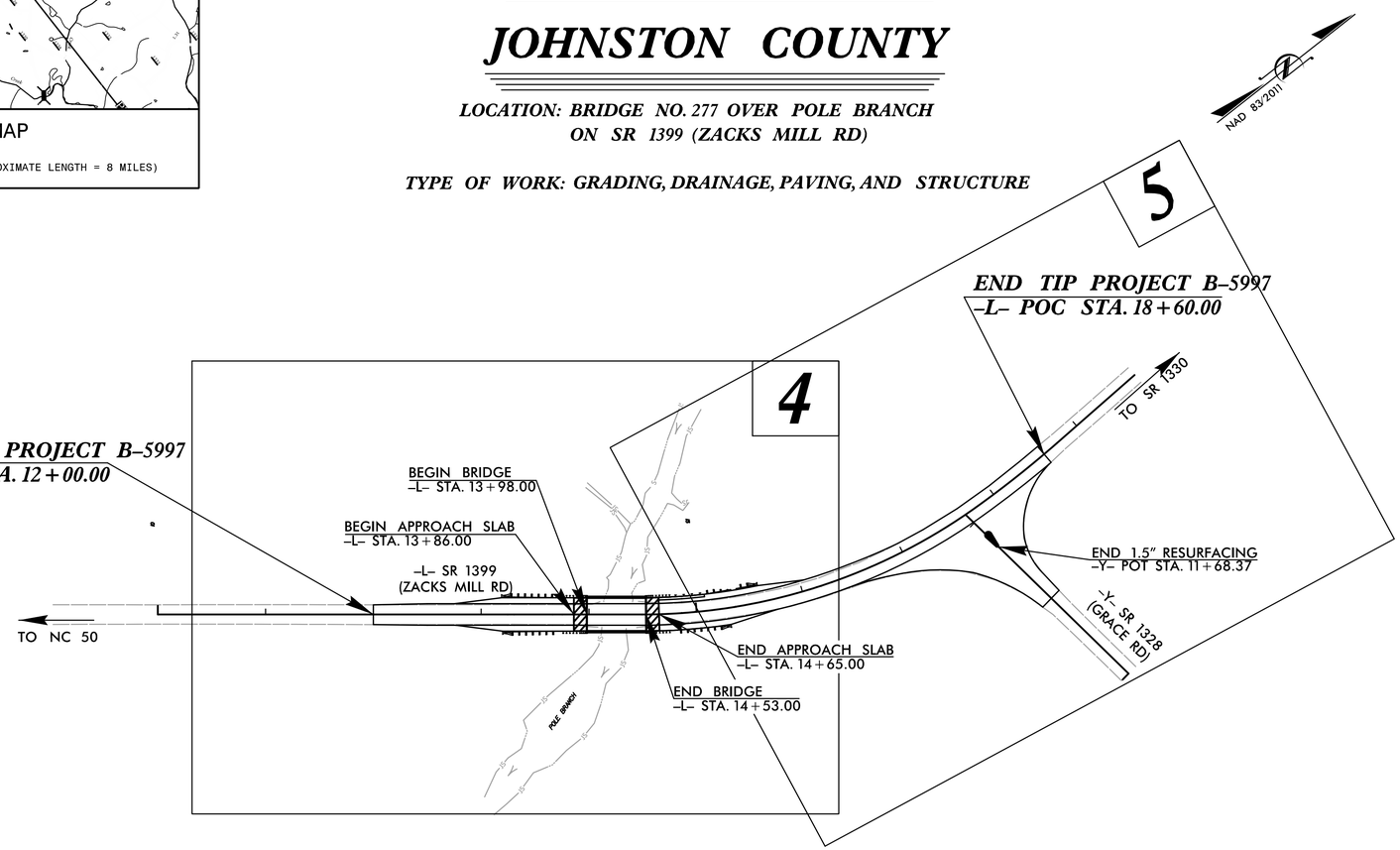


## EROSION AND SEDIMENT CONTROL MEASURES

| Std. # | Description | Symbol |
|---|---|---|
| 1630.03 | Temporary Silt Ditch | TSD |
| 1630.05 | Temporary Diversion | TD |
| 1605.01 | Temporary Silt Fence | |
| 1606.01 | Special Sediment Control Fence | |
| 1622.01 | Temporary Berms and Slope Drains | |
| 1630.02 | Silt Basin Type B | |
| 1633.01 | Temporary Rock Silt Check Type-A | |
| | Temporary Rock Silt Check Type-A with Matting and Polyacrylamide (PAM) | |
| 1633.02 | Temporary Rock Silt Check Type-B | |
| | Wattle / Coir Fiber Wattle | SW CFW |
| | Wattle / Coir Fiber Wattle with Polyacrylamide (PAM) | |
| 1634.01 | Temporary Rock Sediment Dam Type-A | |
| 1634.02 | Temporary Rock Sediment Dam Type-B | |
| 1635.01 | Rock Pipe Inlet Sediment Trap Type-A | |
| 1635.02 | Rock Pipe Inlet Sediment Trap Type-B | |
| 1630.04 | Stilling Basin | |
| 1630.06 | Special Stilling Basin | |
| | Rock Inlet Sediment Trap: | |
| 1632.01 | Type A | A |
| 1632.02 | Type B | B |
| 1632.03 | Type C | C |
| | Skimmer Basin | |
| | Tiered Skimmer Basin | |
| | Infiltration Basin | |

*THIS PROJECT CONTAINS EROSION CONTROL PLANS FOR CLEARING AND GRUBBING PHASE OF CONSTRUCTION.*

*THIS PROJECT HAS BEEN DESIGNED TO SENSITIVE WATERSHED STANDARDS.*

*ENVIRONMENTALLY SENSITIVE AREA(S) EXIST ON THIS PROJECT*

*Refer To E. C. Special Provisions for Special Considerations.*

*GRAPHIC SCALE*

25 0 50
PLANS

25 0 50
PROFILE (HORIZONTAL)

5 0 10
PROFILE (VERTICAL)

*THESE EROSION AND SEDIMENT CONTROL PLANS COMPLY WITH THE REGULATIONS SET FORTH BY THE NCG-010000 GENERAL CONSTRUCTION PERMIT EFFECTIVE AUGUST 1, 2016 AND ISSUED BY THE NORTH CAROLINA DEPARTMENT OF ENVIRONMENTAL QUALITY DIVISION OF WATER RESOURCES.*

*Prepared In the Office of:*

ECOLOGICAL ENGINEERING
NC FIRM LICENSE No: F-1148
1151 SE Cary Parkway
Suite 101
Cary, NC 27518
(919) 557-0929

*Designed by:*

*BRANDON BARHAM, PE* — *3368*
*NAME* — *LEVEL III CERTIFICATION NO.*

*Reviewed In the Office of:*

*ROADSIDE ENVIRONMENTAL UNIT*
*1 South Wilmington St.*
*Raleigh, NC 27611*

*2018 STANDARD SPECIFICATIONS*

*Reviewed by:*

*DONALD PEARSON, EI, CPESC*

*Roadway Standard Drawings*

*The following roadway english standards as appear in "Roadway Standard Drawings"- Roadway Design Unit - N. C. Department of Transportation - Raleigh, N. C., dated January 2018 and the latest revison thereto are applicable to this project and by reference hereby are considered a part of these plans.*

| | | | |
|---|---|---|---|
| 1604.01 | Railroad Erosion Control Detail | 1632.01 | Rock Inlet Sediment Trap Type A |
| 1605.01 | Temporary Silt Fence | 1632.02 | Rock Inlet Sediment Trap Type B |
| 1606.01 | Special Sediment Control Fence | 1632.03 | Rock Inlet Sediment Trap Type C |
| 1607.01 | Gravel Construction Entrance | 1633.01 | Temporary Rock Silt Check Type A |
| 1622.01 | Temporary Berms and Slope Drains | 1633.02 | Temporary Rock Silt Check Type B |
| 1630.01 | Riser Basin | 1634.01 | Temporary Rock Sediment Dam Type A |
| 1630.02 | Silt Basin Type B | 1634.02 | Temporary Rock Sediment Dam Type B |
| 1630.03 | Temporary Silt Ditch | 1635.01 | Rock Pipe Inlet Sediment Trap Type A |
| 1630.04 | Stilling Basin | 1635.02 | Rock Pipe Inlet Sediment Trap Type B |
| 1630.05 | Temporary Diversion | 1640.01 | Coir Fiber Baffle |
| 1630.06 | Special Stilling Basin | 1645.01 | Temporary Stream Crossing |
| 1631.01 | Matting Installation | | |

10:05:45 AM
R:\Environmental\Design\PSH\B02277_REU_TSH.dgn
brandonbarham

DocuSign Envelope ID: 1576A943-B2EB-4096-AAA6-003078224 0B5

| PROJECT REFERENCE NO. | SHEET NO. |
|---|---|
| B-5997 | EC-2 |
| R/W SHEET NO. | |
| ROADWAY DESIGN ENGINEER | HYDRAULICS ENGINEER |

# COIR FIBER WATTLE BARRIER DETAIL

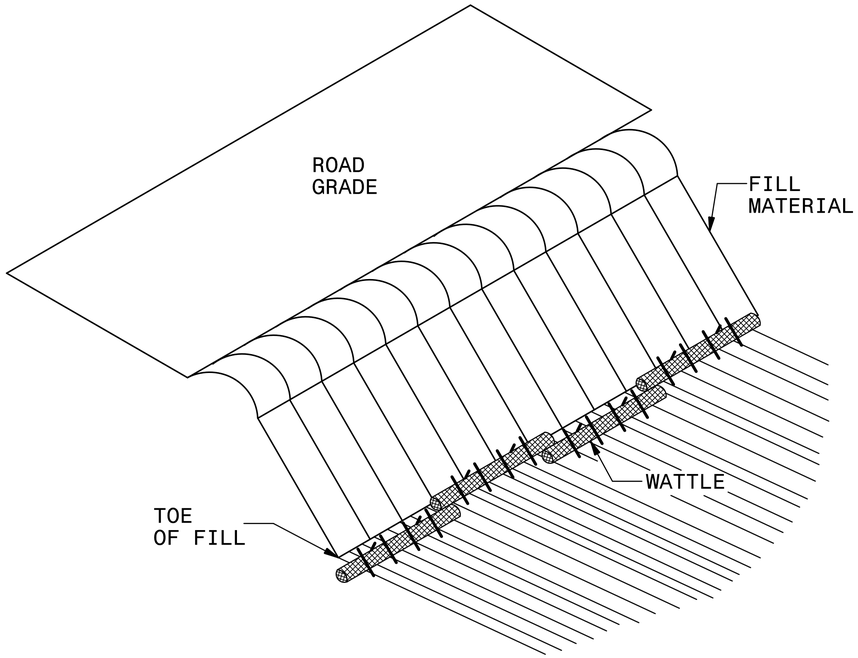


**ISOMETRIC VIEW**

NOTES:

USE MINIMUM 18 IN. NOMINAL DIAMETER COIR FIBER (COCONUT) WATTLE AND LENGTH OF 10 FT.

EXCAVATE A 2 TO 3 INCH TRENCH FOR WATTLE TO BE PLACED.

DO NOT PLACE WATTLES ON TOE OF SLOPE.

USE 2 FT. WOODEN STAKES WITH A 2 IN. BY 2 IN. NOMINAL CROSS SECTION.

INSTALL A MINIMUM OF 2 UPSLOPE STAKES AND 4 DOWNSLOPE STAKES AT AN ANGLE TO WEDGE WATTLE TO GROUND.

PROVIDE STAPLES MADE OF 0.125 IN. DIAMETER STEEL WIRE FORMED INTO A U SHAPE NOT LESS THAN 12″ IN LENGTH.

INSTALL STAPLES APPROXIMATELY EVERY 1 LINEAR FOOT ON BOTH SIDES OF WATTLE AND AT EACH END TO SECURE IT TO THE SOIL.

FOR BREAKS ALONG LARGE SLOPES, USE MAXIMUM SPACING OF 25 FT.

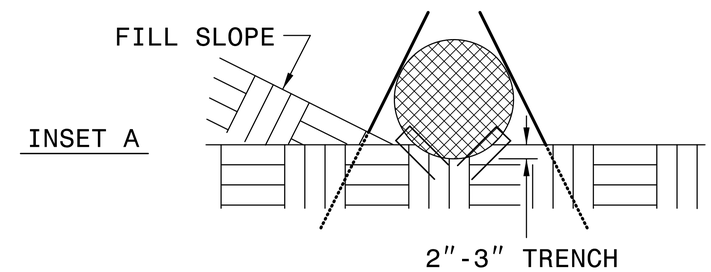


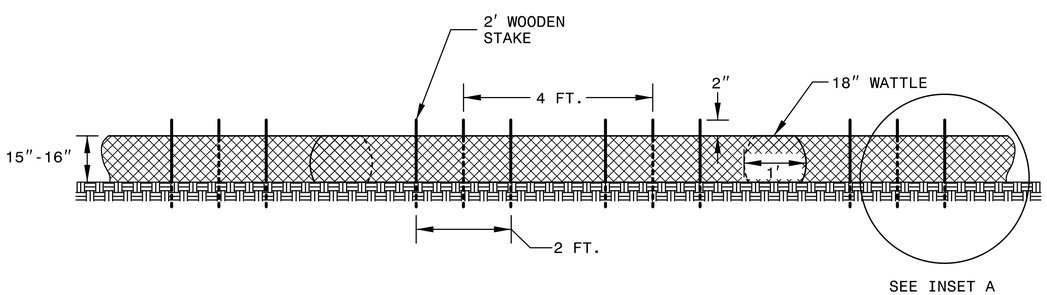


**FRONT VIEW**

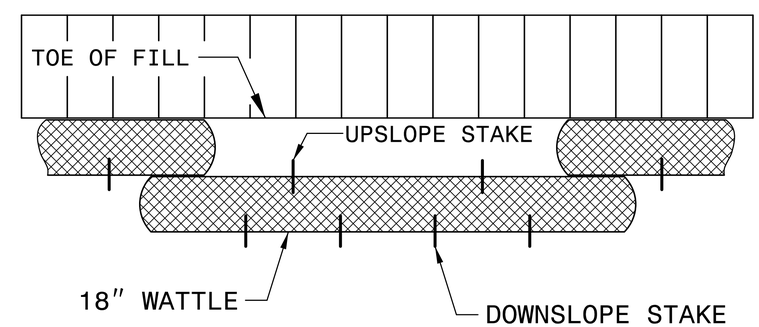


**TOP VIEW**

DocuSign Envelope ID: 1576A943-B2EB-4096-AAA6-0030782240B5

| PROJECT REFERENCE NO. | SHEET NO. |
|---|---|
| B-5997 | EC-2A |
| R/W SHEET NO. | |
| ROADWAY DESIGN ENGINEER | HYDRAULICS ENGINEER |

# TEMPORARY ROCK SILT CHECK TYPE 'A' WITH EXCELSIOR MATTING AND POLYACRYLAMIDE (PAM)

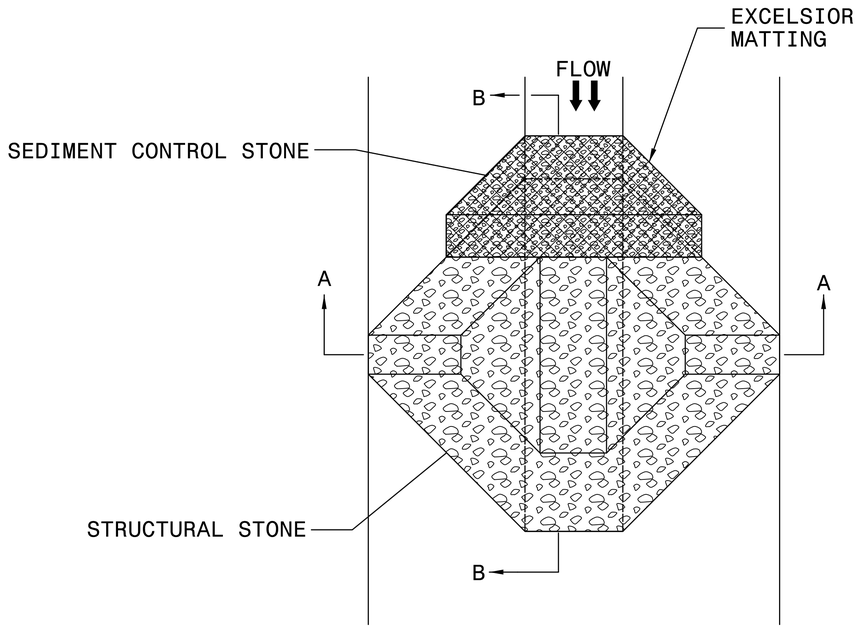


PLAN

NOTES:

INSTALL TEMPORARY ROCK SILT CHECK TYPE A IN ACCORDANCE WITH ROADWAY STANDARD DRAWING NO. 1633.01.

USE EXCELSIOR FOR MATTING MATERIAL AND ANCHOR MATTING SECTION AT TOP AND BOTTOM WITH CLASS B STONE.

PRIOR TO POLYACRYLAMIDE (PAM) APPLICATION, OBTAIN A SOIL SAMPLE FROM PROJECT LOCATION, AND FROM OFFSITE MATERIAL, AND ANALYZE FOR APPROPRIATE PAM FLOCCULANT TO BE APPLIED TO EACH ROCK SILT CHECK.

INITIALLY APPLY 4 OUNCES OF POLYACRYLAMIDE (PAM) TO TOP OF MATTING SECTION AND AFTER EVERY RAINFALL EVENT THAT EQUALS OR EXCEEDS 0.50 INCHES.

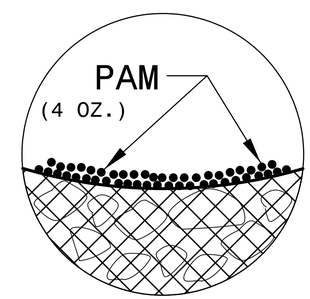


INSET A

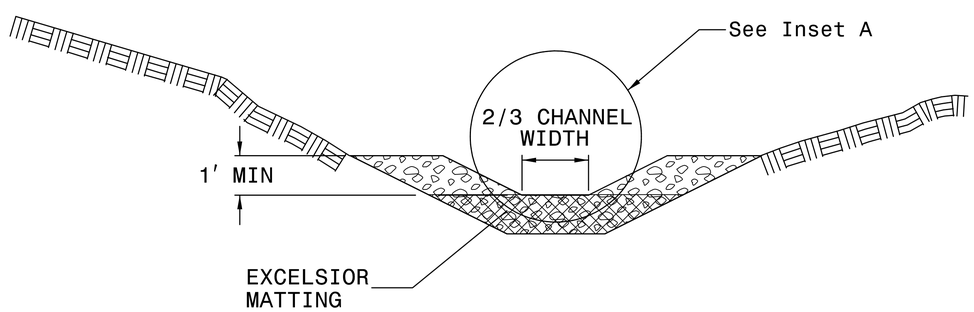


SECTION A-A

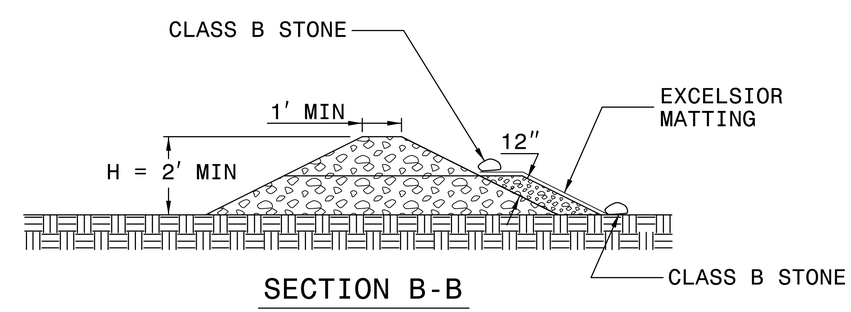


SECTION B-B

NOT TO SCALE

DocuSign Envelope ID: 1576A943-B2EB-4096-AAA6-003078224 0B5

| PROJECT REFERENCE NO. | SHEET NO. |
|---|---|
| B-5997 | EC-3 |
| ROADWAY DESIGN ENGINEER | HYDRAULICS ENGINEER |

DIVISION OF HIGHWAYS
STATE OF NORTH CAROLINA

# SOIL STABILIZATION TIMEFRAMES

| SITE DESCRIPTION | STABILIZATION TIME | TIMEFRAME EXCEPTIONS |
|---|---|---|
| PERIMETER DIKES, SWALES, DITCHES AND SLOPES | 7 DAYS | NONE |
| HIGH QUALITY WATER (HQW) ZONES | 7 DAYS | NONE |
| SLOPES STEEPER THAN 3:1 | 7 DAYS | IF SLOPES ARE 10' OR LESS IN LENGTH AND ARE NOT STEEPER THAN 2:1, 14 DAYS ARE ALLOWED. |
| SLOPES 3:1 OR FLATTER | 14 DAYS | 7 DAYS FOR SLOPES GREATER THAN 50' IN LENGTH. |
| ALL OTHER AREAS WITH SLOPES FLATTER THAN 4:1 | 14 DAYS | NONE, EXCEPT FOR PERIMETERS AND HQW ZONES. |

DocuSign Envelope ID: 1576A943-B2EB-4096-AAA6-003078224 0B5

| PROJECT REFERENCE NO. | SHEET NO. |
|---|---|
| B-5997 | EC-3A |
| ROADWAY DESIGN ENGINEER | HYDRAULICS ENGINEER |

# DIVISION OF HIGHWAYS
# STATE OF NORTH CAROLINA

## SOIL STABILIZATION SUMMARY SHEET

### MATTING FOR EROSION CONTROL

| CONST SHEET NO. | LINE | FROM STATION | TO STATION | SIDE | ESTIMATE (SY) |
|---|---|---|---|---|---|
| 5 | -L- | 16+00 | 17+00 | RT | 105 |
| 5 | -L- | 17+68 | 18+00 | LT | 40 |
| 5 | -L- | 18+00 | 18+75 | LT | 55 |
| | | | | SUBTOTAL | 200 |
| MISCELLANEOUS MATTING TO BE INSTALLED AS DIRECTED BY THE ENGINEER | | | | | 1500 |
| | | | | TOTAL | 1700 |
| | | | | SAY | 1750 |

### MATTING FOR EROSION CONTROL

| CONST SHEET NO. | LINE | FROM STATION | TO STATION | SIDE | ESTIMATE (SY) |
|---|---|---|---|---|---|

DocuSign Envelope ID: 1576A943-B2EB-4096-AAA6-003078224 0B5

8/17/99

REVISIONS

CLEARING AND GRUBBING
EROSION CONTROL FOR
CONSTRUCTION SHEET 4

ENVIRONMENTALLY SENSITIVE AREA
SEE PROJECT SPECIAL PROVISIONS

-L-

PI Sta 16+20.14
Δ = 35° 34' 30.4" (LT)
D = 10° 44' 58.8"
L = 330.94'
T = 171.00'
R = 533.00'
DS = 40 mph
Se = 06
(Se = 04 ON BRIDGE)

PI Sta 18+27.87
Δ = 5° 40' 24.1" (LT)
D = 5° 56' 27.8"
L = 95.49'
T = 47.79'
R = 964.41'
DS = EXIST
Se = EXIST

-L- PC Sta. 14+49.14

CALYX
ENGINEERS + CONSULTANTS
6750 TRYON ROAD
CARY, NC 27518
phone: 919.851.1912
CALYXengineers.com
NC License # F-1333

| PROJECT REFERENCE NO. | SHEET NO. |
|---|---|
| B-5997 | EC-04/CONST.04 |
| R/W SHEET NO. | |
| ROADWAY DESIGN ENGINEER | HYDRAULICS ENGINEER |

INCOMPLETE PLANS
DO NOT USE FOR R/W ACQUISITION

DOCUMENT NOT CONSIDERED FINAL
UNLESS ALL SIGNATURES COMPLETED

END BRIDGE
-L- STA. 14+53.00

BEGIN BRIDGE
-L- STA 13+98.00

NAD 83/NA 2011

MATCHLINE SHEET 5
-L- STA. 16+00.00

FLOODED TIMBER
WOODS
POLE BRANCH
Century Link, 25 PAIR, COPPER
Century Link, F.O.
GUY
EXISTING R/W
LANSCAPE & TREES
SR 1399 ZACKS MILL RD 18' BST
-L- N 38° 09' 21.5" E
50' TAPER TO EXIST
8:1 TAPER
GREU TL-3
TYPE III
27' INC
20'
BRIDGE 277
15" RCP-III
2GI
CLASS B RIP RAP
EST 1 TONS
EST 5 SY
GEOTEXTILE
15+16.00
45.00'
35.00'
15+05.00
45.00'
29.93'
(EX. R/W)
TOE PROTECTION
PDE
EXISTING R/W
END SBG +20
15+25.00
30.32'
(EX. R/W)
14+49.14
50.00'
13+95.00
40.00'
11+90.00
30.00'
12+12.00
40.00'
BEGIN TIP PROJECT B-5997
-L- POT STA. 12+00.00
BZ 1
BZ 2
EIP
REBAR
RW
TB
TY
JS
SY
150
155
160

DETAIL 1
TOE PROTECTION
( Not to Scale)

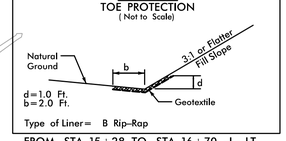


d=1.0 Ft.
b=2.0 Ft.

Type of Liner= B Rip-Rap

FROM STA. 15+28 TO STA. 16+70 -L- LT

1
2
3

10:05:56 AM
H:\Environmental\Design\PSH\500277_REU_PSH_04_CG.dgn
brandonbraham

DocuSign Envelope ID: 1576A943-B2EB-4096-AAA6-0030782240B5

8/17/99

REVISIONS

CLEARING AND GRUBBING
EROSION CONTROL FOR
CONSTRUCTION SHEET 5

-L-

PI Sta 16+20.14
△ = 35° 34' 30.4" (LT)
D = 10° 44' 58.8"
L = 330.94'
T = 171.00'
R = 533.00'
DS = 40 mph
Se = 06

PI Sta 18+27.87
△ = 5° 40' 24.1" (LT)
D = 5° 56' 27.8"
L = 95.49'
T = 47.79'
R = 964.41'
DS = EXIST
Se = EXIST

## DETAIL 2
STANDARD BASE DITCH
( Not to Scale)

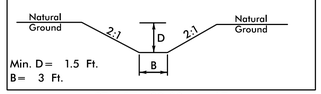


Min. D= 1.5 Ft.
B= 3 Ft.

STA 17+98.00 -L- LT

## DETAIL 3
SPECIAL CUT DITCH
( Not to Scale)

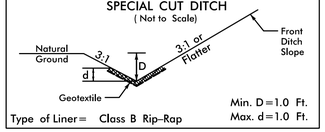


Type of Liner= Class B Rip-Rap
Min. D=1.0 Ft.
Max. d=1.0 Ft.

FROM STA 18+00 TO STA 18+75 -L- LT

CALYX
ENGINEERS + CONSULTANTS
6750 TRYON ROAD
CARY, NC 27518
phone: 919.851.1912
CALYXengineers.com
NC License # F-1333

| PROJECT REFERENCE NO. | SHEET NO. |
|---|---|
| B-5997 | EC-05/CONST.05 |
| R/W SHEET NO. | |
| ROADWAY DESIGN ENGINEER | HYDRAULICS ENGINEER |

**INCOMPLETE PLANS**
DO NOT USE FOR R/W ACQUISITION

**DOCUMENT NOT CONSIDERED FINAL UNLESS ALL SIGNATURES COMPLETED**

## DETAIL 1
TOE PROTECTION
( Not to Scale)

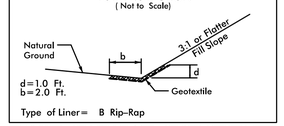


d=1.0 Ft.
b=2.0 Ft.

Type of Liner= B Rip-Rap

FROM STA. 15+28 TO STA. 16+70 -L- LT

NAD 83/NA 2011

-L- POT Sta. 19+71.53

-L- PCC Sta. 17+80.08

CLASS I RIP RAP
EST 11 TONS
EST 21 SY
GEOTEXTILE

SPECIAL CUT DITCH
W/CLASS B RIP RAP
SEE DETAIL 3

END GRADE
BEGIN 1.5" RESURFACING
-L- POC STA. 16+50.00

TOE PROTECTION

STANDARD BASE DITCH
SLOPE = 0.5%
DDE = 35 CY
SEE DETAIL 2

MATCHLINE SHEET 4
-L- STA. 16+00.00

27' INC
+50
50' TRANSITION TO EXIST
PDE
20'
06
EX
10'
9.1'

-L- PT Sta. 18+75.58

EXISTING R/W
WD POST
15" RCP
TO SR 1330
-L-
N 3° 05' 33.0" W
60.00'
18' BST
EXISTING R/W

REMOVE
ASP ISLAND &
REPLACE WITH
5" CONC.
MONO. ISL.

ASP CURB

END TIP PROJECT B-5997
END 1.5" RESURFACING
-L- POC STA. 18+60.00

COLLAR AND
EXTEND
EXISTING
30" RCP

-L- POC Sta. 17+68.01 =
-Y- POT Sta. 12+11.16

END 1.5" RESURFACING
-Y- POT STA. 12+00.96

BEGIN 1.5" RESURFACING
-Y- POT STA. 11+00.00

S 82° 24' 38.7" W
SR 1328 GRACE RD
Johnston County Public Utility
Century Link, F.O.
18.5' BST
60.00'
EXISTING R/W

-Y- POT Sta. 10+00.00

WOODS
DITCH
SOIL DRIVE
48" WW
FENCE
GUY
EIP
SR 1399 ZACKS MILL RD
18" BST
36" RCP
WD POST
Century Link, 12 PAIR, COPPER
T FO
150
155
160
165
170

PAVED SHOULDER

NOTES: SEE SHEET 6 FOR -L- PROFILE

10:06:01 AM
H:\Environmental\Design\PSH\500277_REU_PSH_05_CG.dgn
brandonbraham

DocuSign Envelope ID: 1576A943-B2EB-4096-AAA6-003078224 0B5

8/17/99

REVISIONS

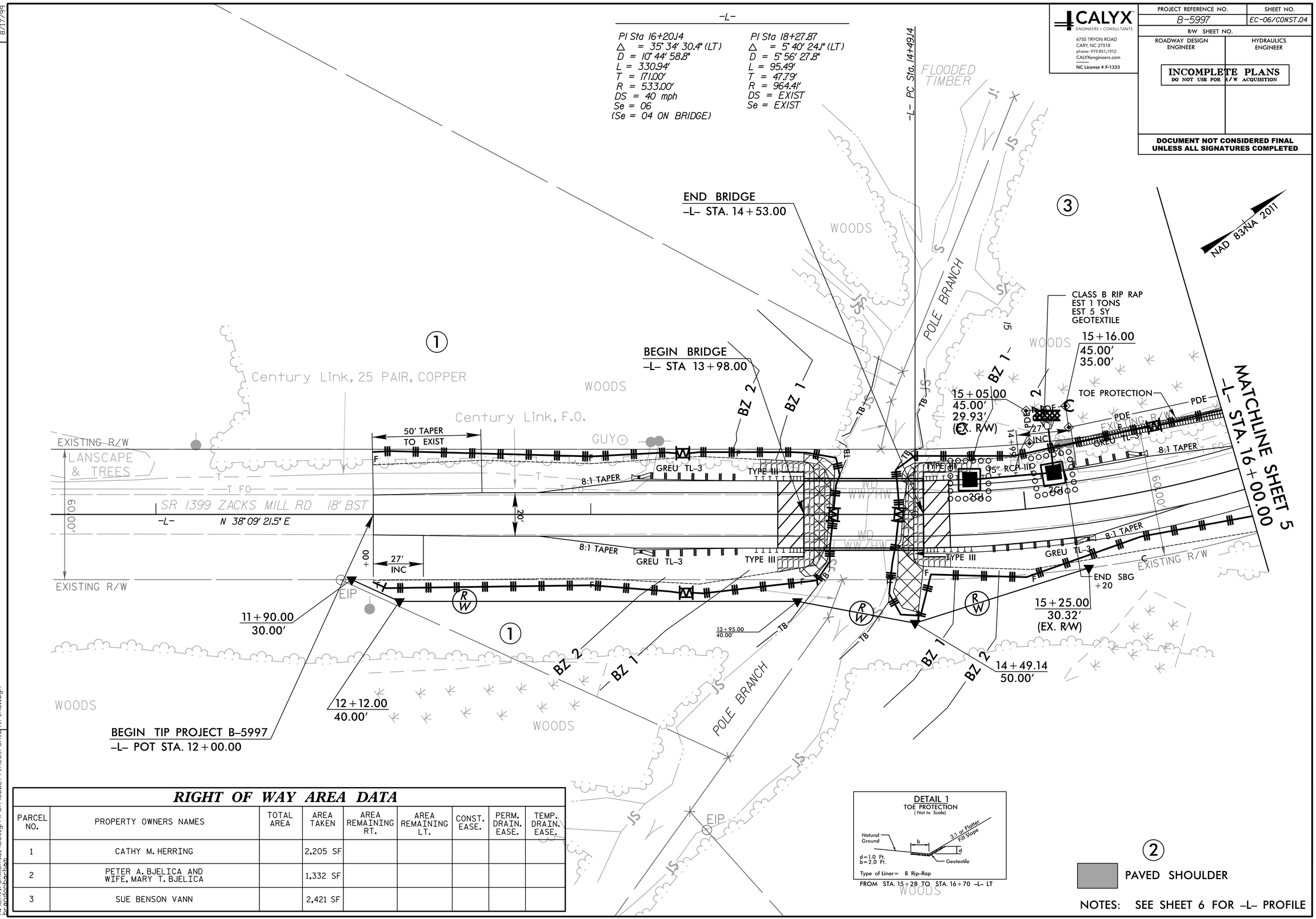


NOTES: SEE SHEET 6 FOR -L- PROFILE

| PROJECT REFERENCE NO. | SHEET NO. |
|---|---|
| B-5997 | EC-06/CONST.04 |
| R/W SHEET NO. | |
| ROADWAY DESIGN ENGINEER | HYDRAULICS ENGINEER |

CALYX ENGINEERS + CONSULTANTS
6750 TRYON ROAD
CARY, NC 27518
phone: 919.851.1912
CALYXengineers.com
NC License # F-1333

INCOMPLETE PLANS
DO NOT USE FOR R/W ACQUISITION

DOCUMENT NOT CONSIDERED FINAL UNLESS ALL SIGNATURES COMPLETED

## RIGHT OF WAY AREA DATA

| PARCEL NO. | PROPERTY OWNERS NAMES | TOTAL AREA | AREA TAKEN | AREA REMAINING RT. | AREA REMAINING LT. | CONST. EASE. | PERM. DRAIN. EASE. | TEMP. DRAIN. EASE. |
|---|---|---|---|---|---|---|---|---|
| 1 | CATHY M. HERRING | | 2,205 SF | | | | | |
| 2 | PETER A. BJELICA AND WIFE, MARY T. BJELICA | | 1,332 SF | | | | | |
| 3 | SUE BENSON VANN | | 2,421 SF | | | | | |

10:06:05 AM
R:\Environmental\Design\PSH\500277_REU_PSH_04_Final.dgn
brandonbarham

DocuSign Envelope ID: 1576A943-B2EB-4096-AAA6-003078224 0B5

8/17/99

REVISIONS

Place Matting for Erosion Control on Slope as Work Allows. Sta. 17+80 LT to Sta. 18+20 LT

-L-

PI Sta 16+20.14
△ = 35° 34' 30.4" (LT)
D = 10° 44' 58.8"
L = 330.94'
T = 171.00'
R = 533.00'
DS = 40 mph
Se = 06

PI Sta 18+27.87
△ = 5° 40' 24.1" (LT)
D = 5° 56' 27.8"
L = 95.49'
T = 47.79'
R = 964.41'
DS = EXIST
Se = EXIST

**DETAIL 2**
STANDARD BASE DITCH
( Not to Scale)

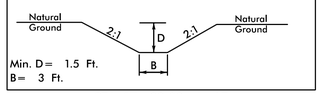


STA 17+98.00 -L- LT

**DETAIL 3**
SPECIAL CUT DITCH
( Not to Scale)

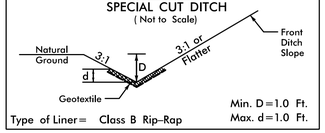


FROM STA 18+00 TO STA 18+75 -L- LT

CALYX
ENGINEERS + CONSULTANTS
6750 TRYON ROAD
CARY, NC 27518
phone: 919.851.1912
CALYXengineers.com
NC License # F-1333

| PROJECT REFERENCE NO. | SHEET NO. |
|---|---|
| B-5997 | EC-07/CONST.05 |
| R/W SHEET NO. | |
| ROADWAY DESIGN ENGINEER | HYDRAULICS ENGINEER |

**INCOMPLETE PLANS**
DO NOT USE FOR R/W ACQUISITION

**DOCUMENT NOT CONSIDERED FINAL UNLESS ALL SIGNATURES COMPLETED**

**DETAIL 1**
TOE PROTECTION
( Not to Scale)

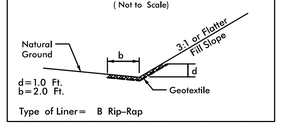


FROM STA. 15+28 TO STA. 16+70 -L- LT

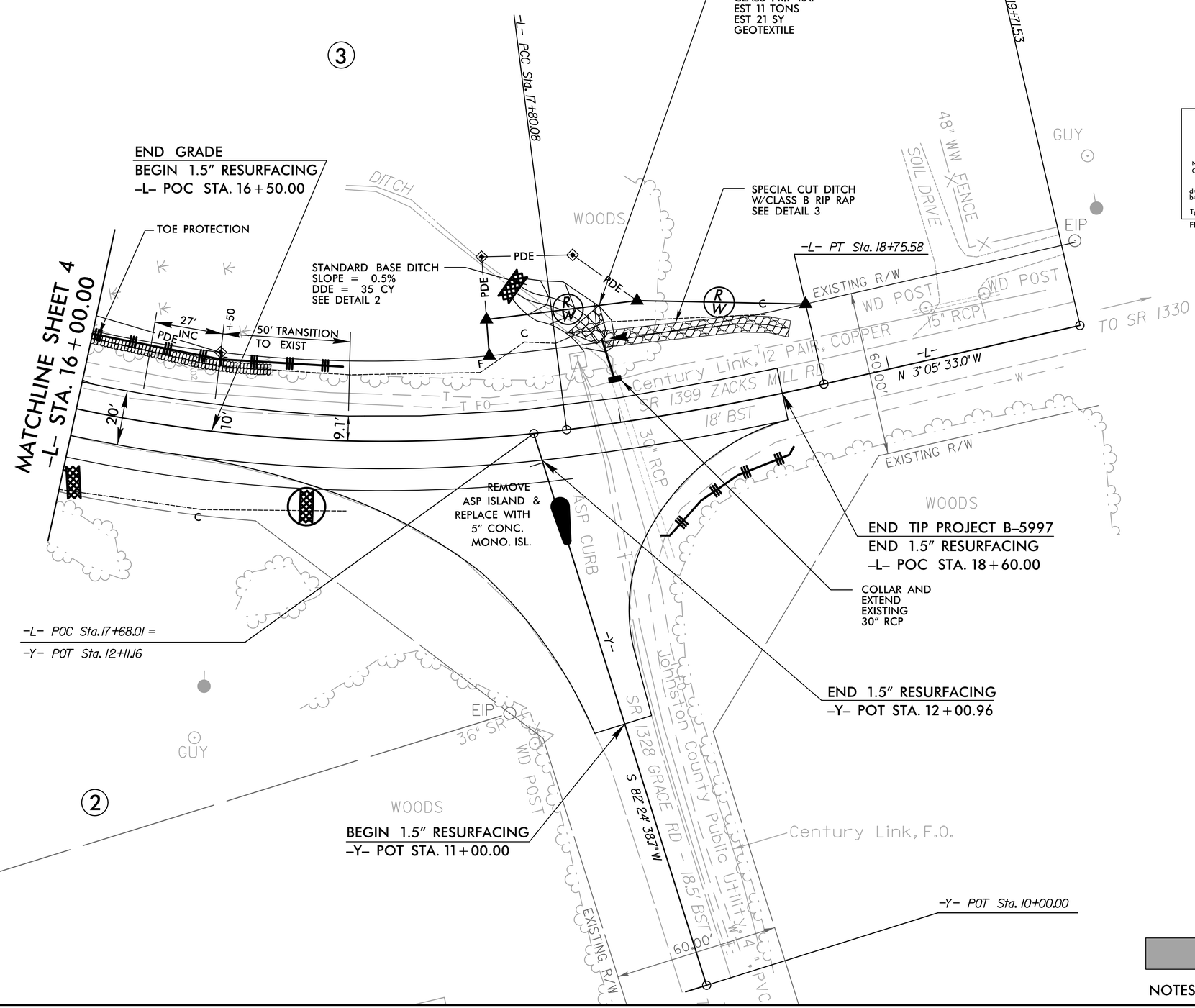


PAVED SHOULDER

NOTES: SEE SHEET 6 FOR -L- PROFILE

10:06:09 AM
R:\Environmental\Design\PSH\500277_REU_PSH_06_Final.dgn
brandonbarham

DocuSign Envelope ID: 1576A943-B2EB-4096-AAA6-003078224 0B5

| STATE | STATE PROJECT REFERENCE NO. | SHEET NO. | TOTAL SHEETS |
|---|---|---|---|
| N.C. | B–5997 | RF–1 | |

| STATE PROJ. NO. | F. A. PROJ. NO. | DESCRIPTION |
|---|---|---|
| | | |

# PLANTING DETAILS

## SEEDLING / LINER BAREROOT PLANTING DETAIL

### HEALING IN

1. Locate a healing–in site in a shady, well protected area.
2. Excavate a flat bottom trench 12 inches deep and provide drainage.

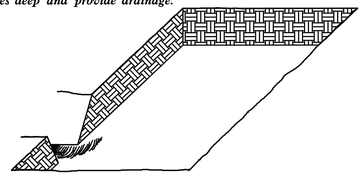

3. Backfill the trench with 2 inches well rotted sawdust. Place a 2 inch layer of well rotted sawdust at a sloping angle at one end of the trench.

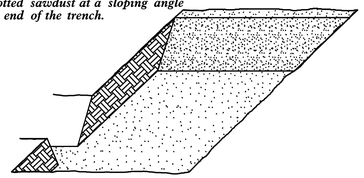

4. Place a single layer of plants against the sloping end so that the root collar is at ground level.

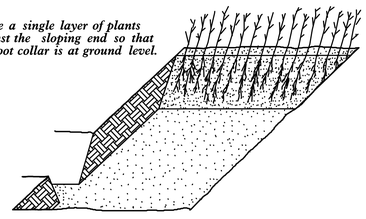

5. Place a 2 inch layer of well rotted sawdust over the roots maintaining a sloping angle.

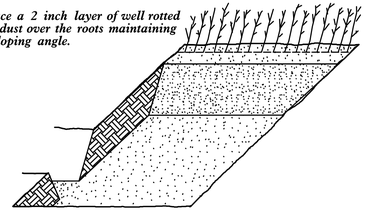

6. Repeat layers of plants and sawdust as necessary and water thoroughly.

### DIBBLE PLANTING METHOD
USING THE KBC PLANTING BAR

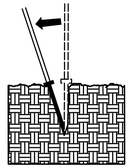

1. Insert planting bar as shown and pull handle toward planter.

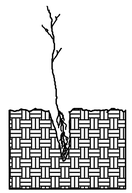

2. Remove planting bar and place seedling at correct depth.

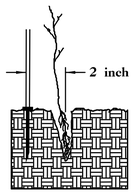


3. Insert planting bar 2 inches toward planter from seedling.

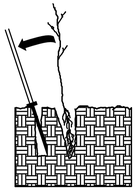

4. Pull handle of bar toward planter, firming soil at bottom.

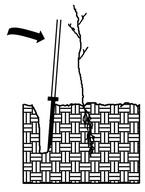

5. Push handle forward firming soil at top.

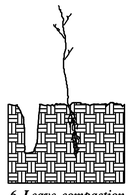

6. Leave compaction hole open. Water thoroughly.

### PLANTING NOTES:

**PLANTING BAG**
During planting, seedlings shall be kept in a moist canvas bag or similar container to prevent the root systems from drying.

**KBC PLANTING BAR**
Planting bar shall have a blade with a triangular cross section, and shall be 12 inches long, 4 inches wide and 1 inch thick at center.

**ROOT PRUNING**
All seedlings shall be root pruned, if necessary, so that no roots extend more than 10 inches below the root collar.

# REFORESTATION

☐ TREE REFORESTATION SHALL BE PLANTED 6 FT. TO 10 FT. ON CENTER, RANDOM SPACING, AVERAGING 8 FT. ON CENTER, APPROXIMATELY 680 PLANTS PER ACRE.

**REFORESTATION**

MIXTURE, TYPE, SIZE, AND FURNISH SHALL CONFORM TO THE FOLLOWING:

| | | | |
|---|---|---|---|
| 25% | LIRIODENDRON TULIPIFERA | TULIP POPLAR | 12 in – 18 in BR |
| 25% | PLATANUS OCCIDENTALIS | AMERICAN SYCAMORE | 12 in – 18 in BR |
| 25% | FRAXINUS PENNSYLVANICA | GREEN ASH | 12 in – 18 in BR |
| 25% | BETULA NIGRA | RIVER BIRCH | 12 in – 18 in BR |

# REFORESTATION DETAIL SHEET

N.C.D.O.T. - ROADSIDE ENVIRONMENTAL UNIT

DocuSign Envelope ID: 1576A943-B2EB-4096-AAA6-003078224 0B5

| 0 2.5 5 | PROJ. REFERENCE NO. | SHEET NO. |
|---|---|---|
| | B-5997 | X-1 |

CALYX ENGINEERS + CONSULTANTS

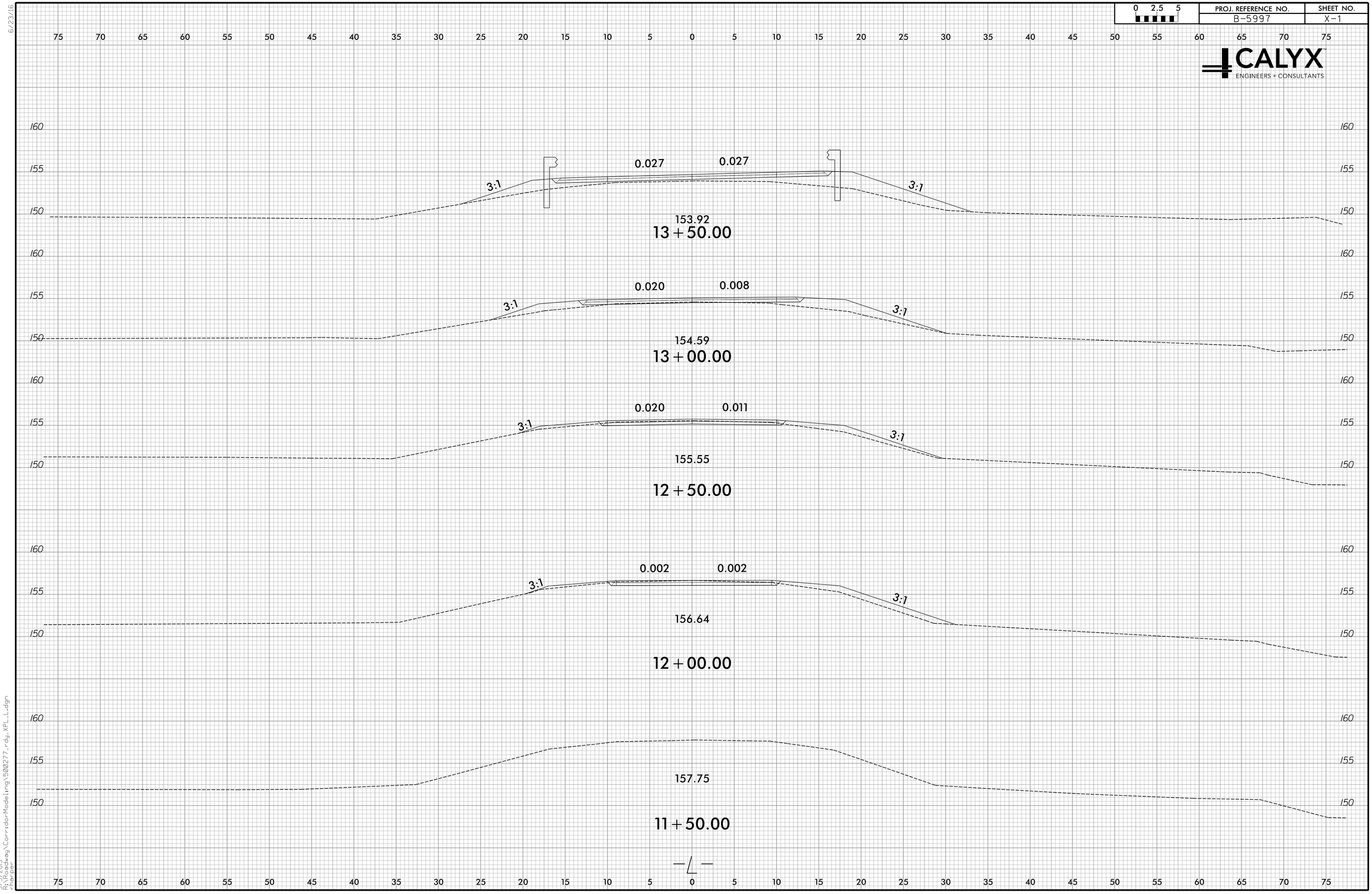


6/23/16
3/5/2019
R:\Roadway\CorridorModeling\500277_rdy_XPL_L.dgn
rharper

DocuSign Envelope ID: 1576A943-B2EB-4096-AAA6-003078224 0B5

6/23/16

| 0 2.5 5 | PROJ. REFERENCE NO. | SHEET NO. |
|---|---|---|
| | B-5997 | X-2 |

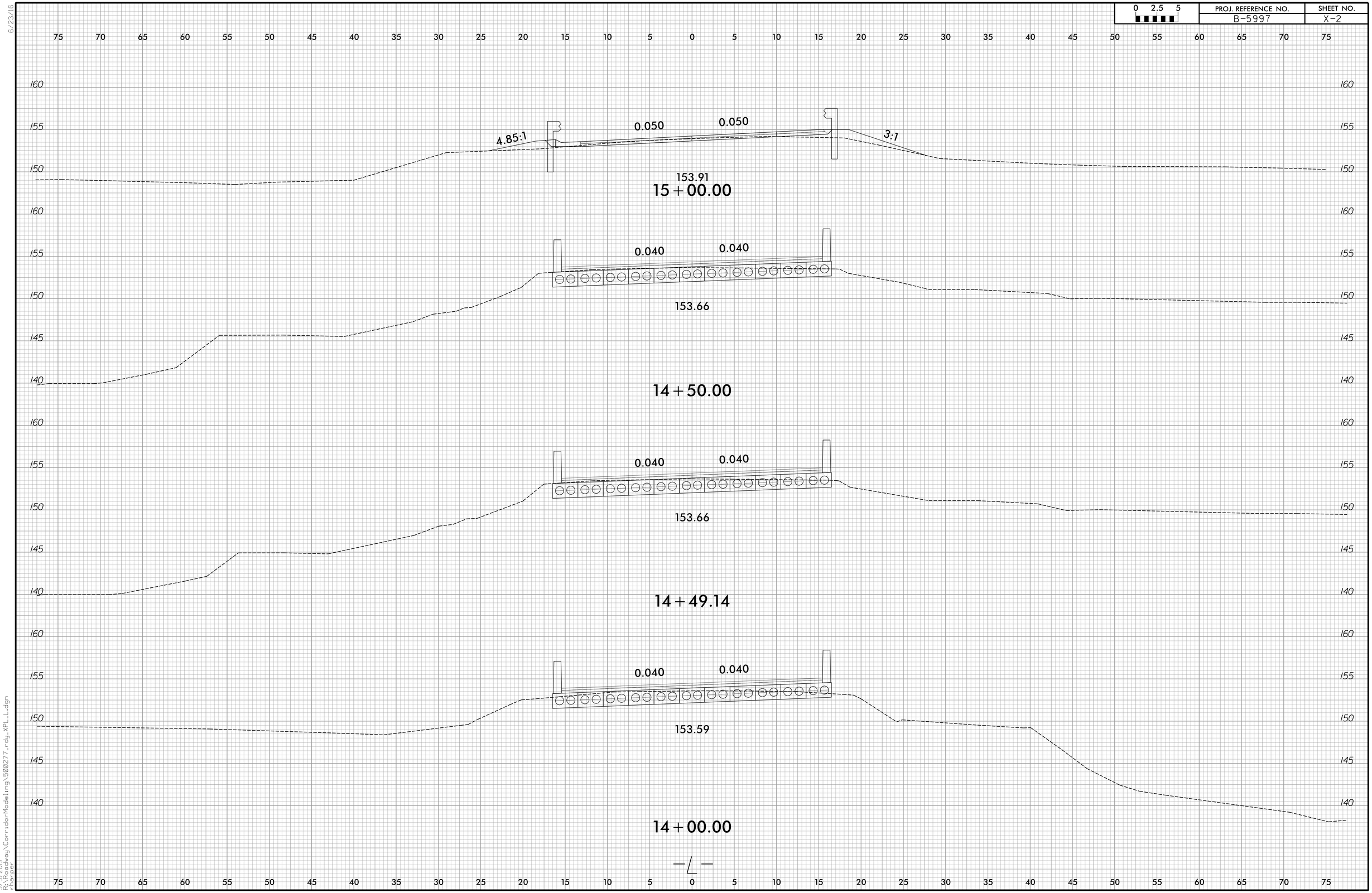


3/5/2019
R:\Roadway\CorridorModeling\500277_rdy_XPL_L.dgn
rharper

DocuSign Envelope ID: 1576A943-B2EB-4096-AAA6-003078224 0B5

6/23/16

| PROJ. REFERENCE NO. | SHEET NO. |
|---|---|
| B-5997 | X-3 |

0 2.5 5

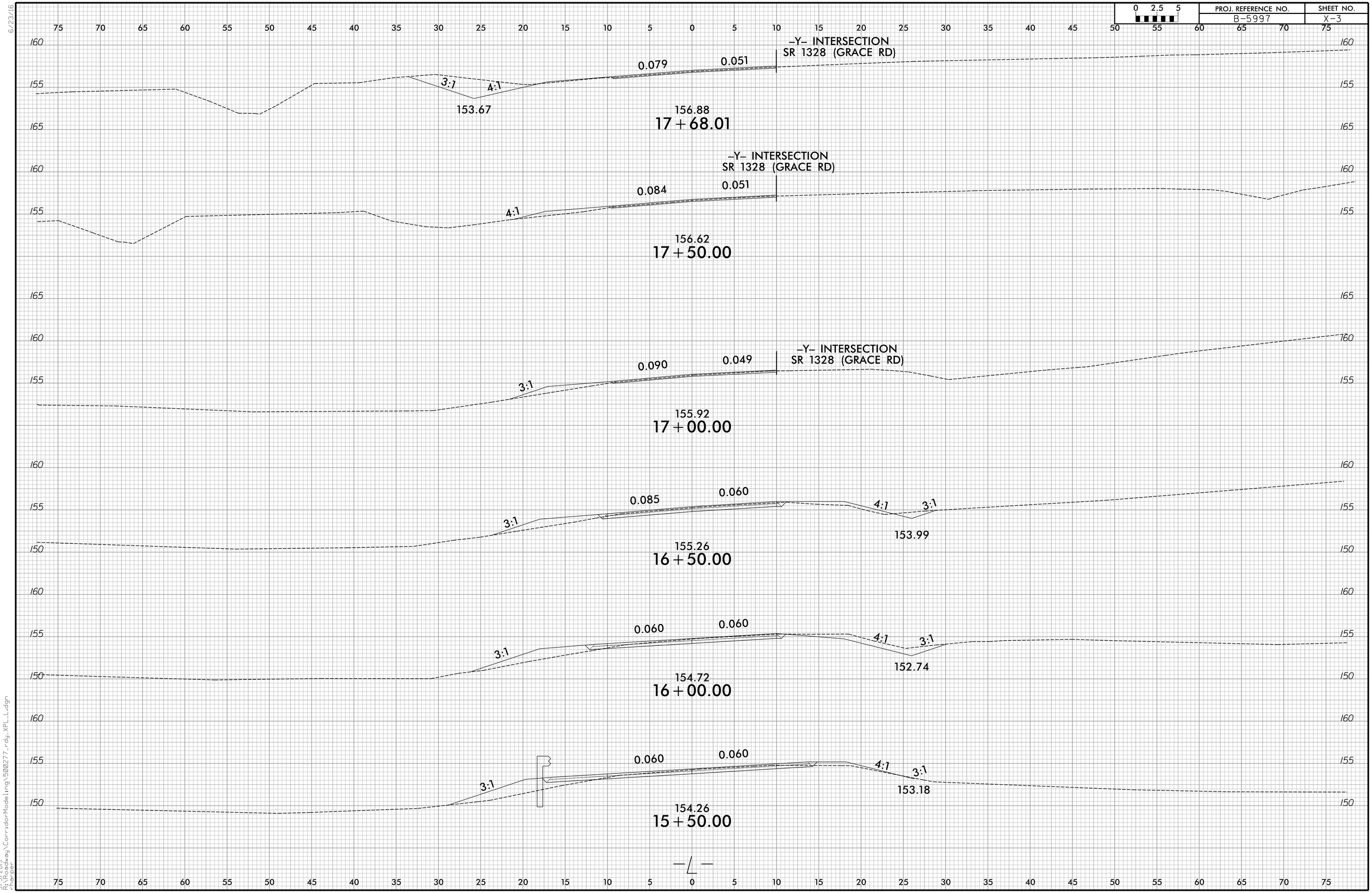


3/5/2019
R:\Roadway\CorridorModeling\500277_rdy_XPL_L.dgn
rharper

DocuSign Envelope ID: 1576A943-B2EB-4096-AAA6-003078224 0B5

6/23/16

| 0 2.5 5 | PROJ. REFERENCE NO. | SHEET NO. |
|---|---|---|
| | B-5997 | X-4 |

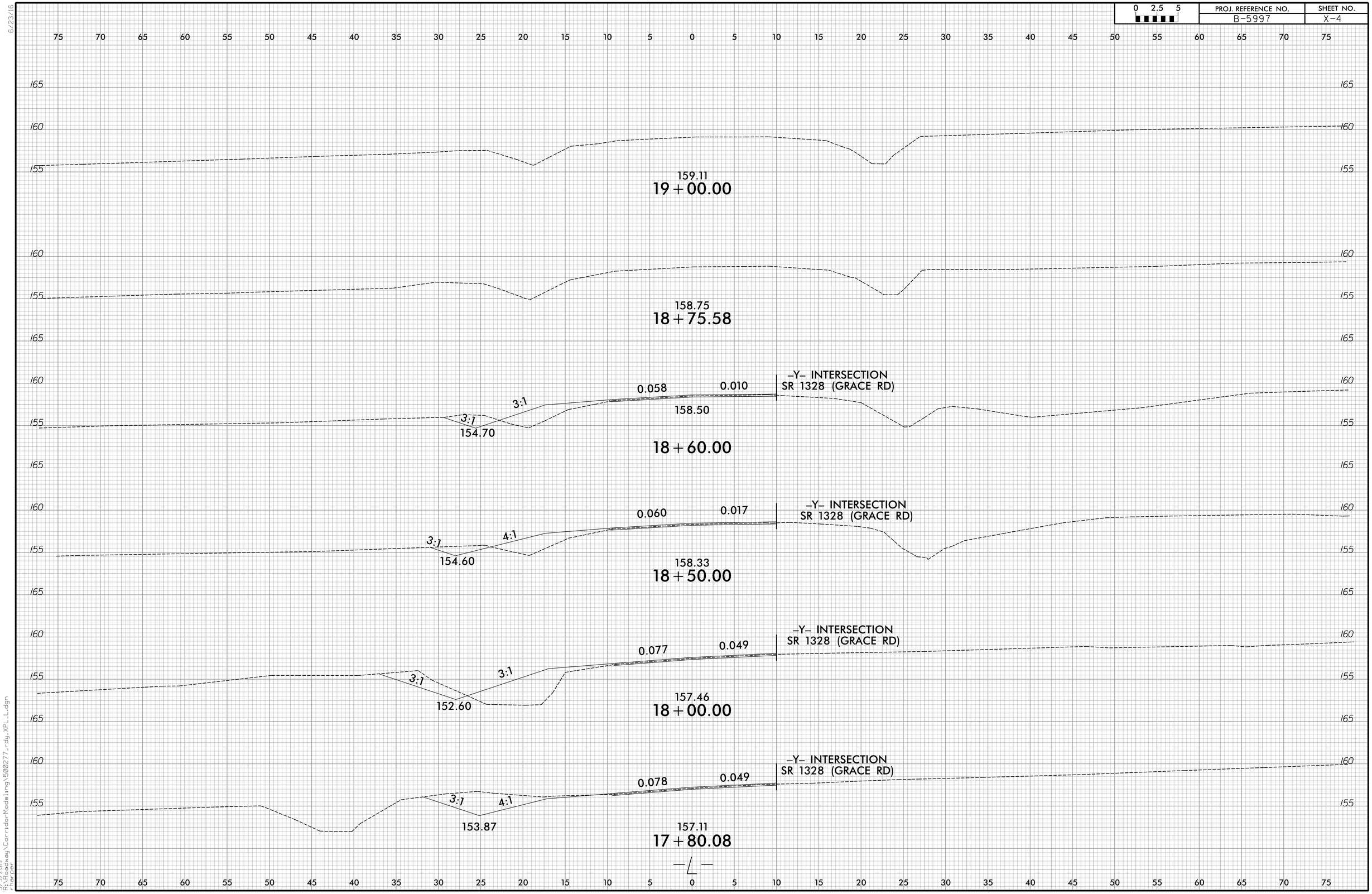


3/5/2019
R:\Roadway\CorridorModeling\500277_rdy_XPL_L.dgn
rharper

DocuSign Envelope ID: 1576A943-B2EB-4096-AAA6-003078224 0B5

F. A. PROJECT NO.: BRZ-1399(001)

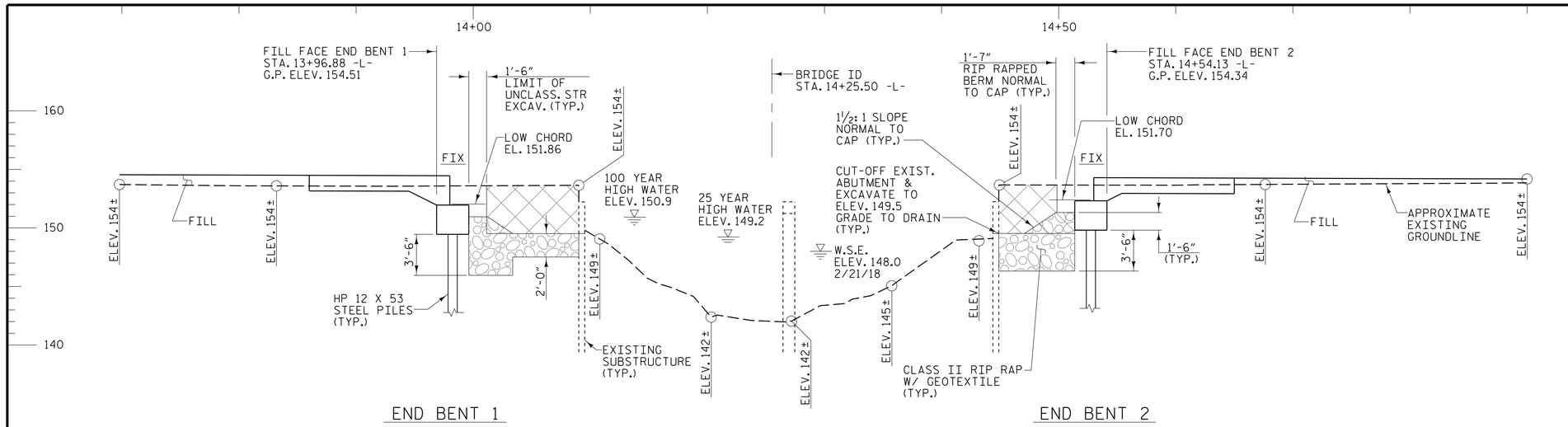


## SECTION ALONG -L-

PI = 12+90.00
EL = 154.83'
VC = 170'
(-)2.0094% △ (-)0.3000%

PI = 15+75.00
EL = 153.98'
VC = 180'
(-)0.3000% △ (+)1.5913%

GRADE DATA
-L- (SR 1399)

HYDRAULIC DATA:

| | |
|---|---|
| DESIGN DISCHARGE - | 650 CFS |
| FREQUENCY OF DESIGN FLOOD - | 25 YEAR |
| DESIGN HIGH WATER ELEVATION - | 149.2 |
| DRAINAGE AREA - | 5.0 SQ. MI. |
| BASE DISCHARGE (Q 100) - | 1183 CFS |
| BASE HIGH WATER ELEVATION - | 150.9 |

OVERTOPPING DATA:

| | |
|---|---|
| OVERTOPPING DISCHARGE - | 2802 CFS |
| FREQUENCY OF OVERTOPPING- | 500+ YEAR |
| OVERTOPPING FLOOD ELEVATION - | 154.8 |

LOW POINT OF ROADWAY OVERTOPPING PROFILE OCCURS AT -L- STA. 15+13

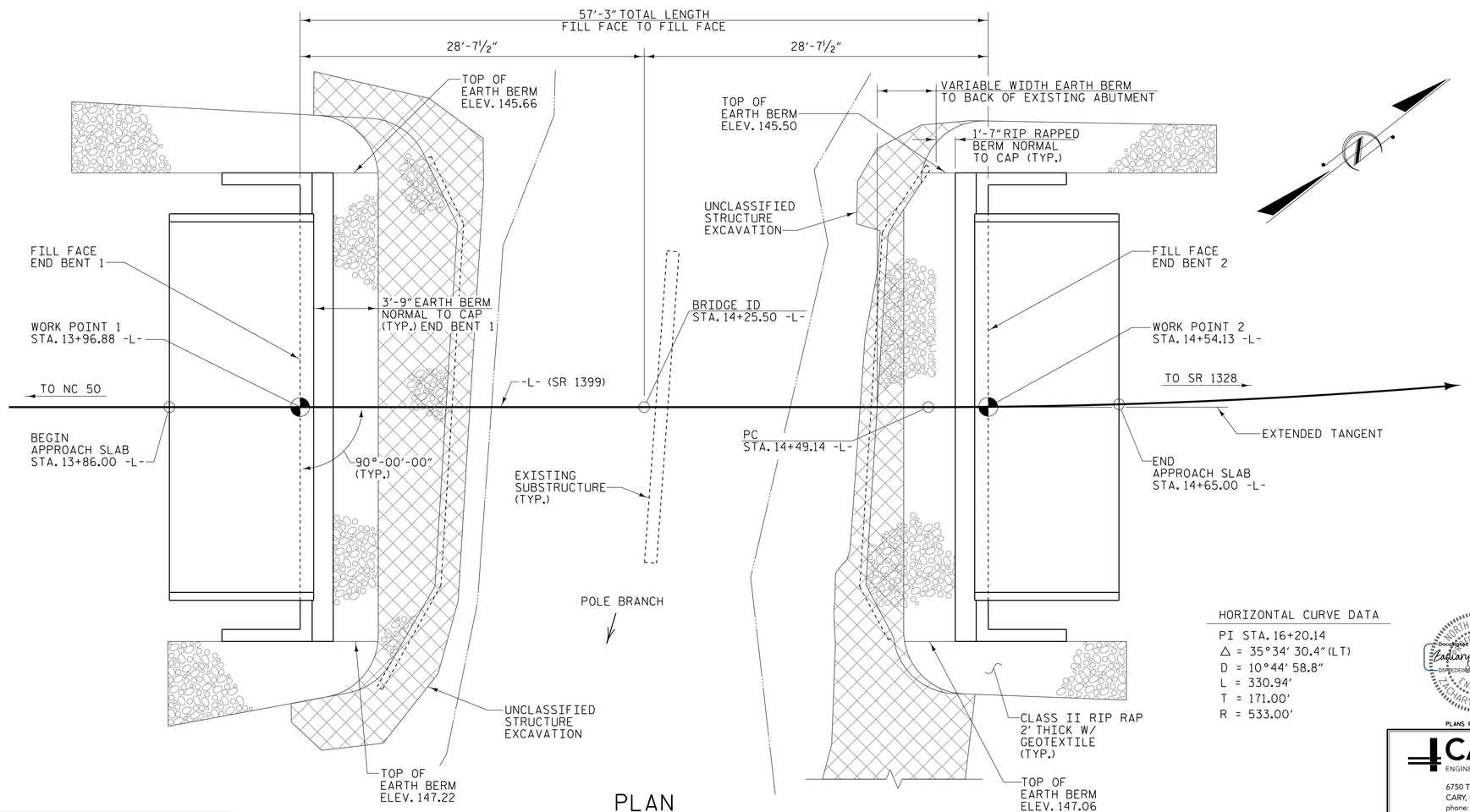


## PLAN

PILES NOT SHOWN FOR CLARITY

I HEREBY CERTIFY THESE PLANS ARE THE AS-BUILT PLANS

HORIZONTAL CURVE DATA

PI STA. 16+20.14
△ = 35°34' 30.4" (LT)
D = 10°44' 58.8"
L = 330.94'
T = 171.00'
R = 533.00'

NORTH CAROLINA PROFESSIONAL ENGINEER SEAL 045785 ZACHARY H. BROWN
Zachary H. Brown
DocuSigned by: DSPEDE004487
3/8/2019

PLANS PREPARED BY:
CALYX ENGINEERS + CONSULTANTS
6750 TRYON ROAD
CARY, NC 27518
phone: 919.851.1912
CALYXengineers.com
NC License # F-1333

DOCUMENT NOT CONSIDERED FINAL UNLESS ALL SIGNATURES COMPLETED

PROJECT NO. B-5997
JOHNSTON COUNTY
STATION: 14+25.50 -L-

SHEET 1 OF 2 REPLACES BRIDGE NO. 277

STATE OF NORTH CAROLINA
DEPARTMENT OF TRANSPORTATION
RALEIGH

# GENERAL DRAWING

BRIDGE ON SR 1399
OVER POLE BRANCH
BETWEEN NC 50 & SR 1328

30'-10" CLEAR ROADWAY - 90° SKEW

| REVISIONS | | | | | | | | SHEET NO. |
|---|---|---|---|---|---|---|---|---|
| NO. | BY: | DATE: | NO. | BY: | DATE: | | | S-1 |
| 1 | | | 3 | | | | | TOTAL SHEETS |
| 2 | | | 4 | | | | | 14 |

| | | | |
|---|---|---|---|
| DRAWN BY : | W. B. ALLEN | DATE : | 6/18 |
| CHECKED BY : | Z. H. BROWN | DATE : | 6/18 |
| DESIGN ENGINEER OF RECORD: | Z. H. BROWN | DATE : | 6/18 |

11/1/2018 8:54:38 AM R:\Structures\B5997_SMU_GDL_500277.dgn

DocuSign Envelope ID: 1576A943-B2EB-4096-AAA6-003078224 0B5

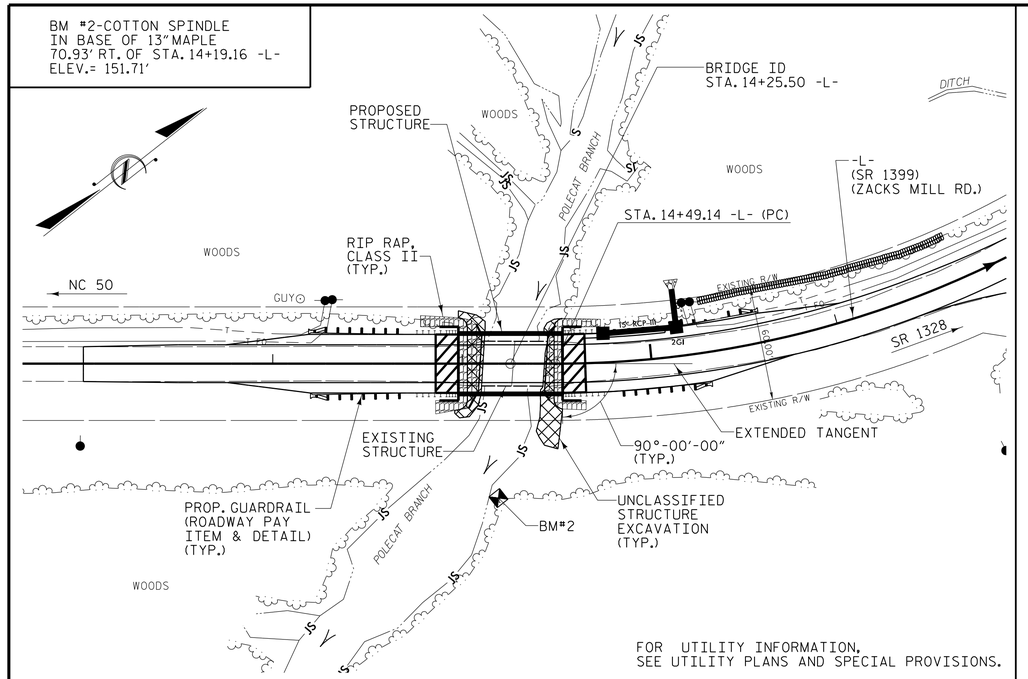


## LOCATION SKETCH

## NOTES

ASSUMED LIVE LOAD = HL-93 OR ALTERNATE LOADING.

THIS BRIDGE HAS BEEN DESIGNED IN ACCORDANCE WITH THE AASHTO LRFD BRIDGE DESIGN SPECIFICATIONS.

THIS BRIDGE IS LOCATED IN SEISMIC ZONE 1.

FOR EROSION CONTROL MEASURES SEE EROSION CONTROL PLANS.

FOR OTHER DESIGN DATA AND GENERAL NOTES, SEE SHEET SN.

REMOVAL OF THE EXISTING BRIDGE SHALL BE PERFORMED SO AS NOT TO ALLOW DEBRIS TO FALL INTO THE WATER. THE CONTRACTOR SHALL REMOVE THE BRIDGE AND SUBMIT PLANS FOR THE DEMOLITION IN ACCORDANCE WITH ARTICLE 402-2 OF THE STANDARD SPECIFICATIONS.

THE MATERIAL SHOWN ON SHEET 1 OF 2 IN THE CROSS-HATCHED AREA SHALL BE EXCAVATED FOR A MAX. DISTANCE OF 28 FT. LT. AND RT. OF CENTERLINE ROADWAY AT END BENT 1 AND 25 FT. LT. AND 45 FT. RT. OF CENTERLINE ROADWAY AT END BENT 2 AS DIRECTED BY THE ENGINEER. THIS WORK WILL BE PAID FOR AT THE LUMP SUM PRICE FOR UNCLASSIFIED STRUCTURE EXCAVATION. SEE SECTION 412 OF THE STANDARD SPECIFICATIONS.

THE EXISTING STRUCTURE CONSISTING OF TWO 17'-8" SPANS WITH A 23'-9" CLEAR ROADWAY WIDTH AND REINF. CONCRETE DECK ON TIMBER JOISTS SUPPORTED ON TIMBER CAPS & TIMBER PILES SHALL BE REMOVED. THE BRIDGE IS PRESENTLY POSTED FOR LOAD LIMIT.

THE SUBSTRUCTURE OF THE EXISTING BRIDGE INDICATED ON THE PLANS IS FROM THE BEST INFORMATION AVAILABLE. SINCE THIS INFORMATION IS SHOWN FOR THE CONVENIENCE OF THE CONTRACTOR, THE CONTRACTOR SHALL HAVE NO CLAIM WHATSOEVER AGAINST THE DEPARTMENT OF TRANSPORTATION FOR ANY DELAYS OR ADDITIONAL COST INCURRED BASED ON DIFFERENCES BETWEEN THE EXISTING BRIDGE SUBSTRUCTURE SHOWN ON THE PLANS AND THE ACTUAL CONDITIONS AT THE PROJECT SITE.

IF EXISTING TIMBER PILES CANNOT BE REMOVED, THEY MAY BE CUT-OFF AT THE MUDLINE.

THIS STRUCTURE HAS BEEN DESIGNED IN ACCORDANCE WITH HEC 18, "EVALUATING SCOUR AT BRIDGES".

FOR ASBESTOS ASSESSMENT FOR BRIDGE DEMOLITION AND RENOVATIONS ACTIVITIES, SEE SPECIAL PROVISIONS.

THE CONTRACTOR SHALL PROVIDE INDEPENDENT ASSURANCE SAMPLES OF REINFORCING STEEL AS FOLLOWS: FOR PROJECTS REQUIRING UP TO 400 TONS OF REINFORCING STEEL, ONE 30 INCH SAMPLE OF EACH SIZE BAR USED, AND FOR PROJECTS REQUIRING OVER 400 TONS OF REINFORCING STEEL, TWO 30 INCH SAMPLES OF EACH SIZE BAR USED. THE SAMPLE BARS SHOULD COME FROM STEEL ACTUALLY USED IN THE PROJECT AND THE SAMPLE BARS SHOULD BE REPLACED BY SPLICED BARS AS SPECIFIED IN THE SAMPLE BAR REPLACEMENT CHART. PAYMENT FOR THE SAMPLE BARS AND REPLACEMENT REINFORCING STEEL SHALL BE CONSIDERED INCIDENTAL TO VARIOUS PAY ITEMS.

FOR SUBMITTAL OF WORKING DRAWINGS, SEE SPECIAL PROVISIONS.

FOR FALSEWORK AND FORMWORK, SEE SPECIAL PROVISIONS.

FOR CRANE SAFETY, SEE SPECIAL PROVISIONS.

FOR GROUT FOR STRUCTURES, SEE SPECIAL PROVISIONS.

NO DECK DRAINS REQUIRED.

ASPHALT WEARING SURFACE IS INCLUDED IN ROADWAY QUANTITIES ON ROADWAY PLANS.

## FOUNDATION NOTES

FOR PILES, SEE SECTION 450 OF THE STANDARD SPECIFICATIONS.

PILES AT END BENT NO. 1 AND END BENT NO. 2 ARE DESIGNED FOR A FACTORED RESISTANCE OF 71 TONS PER PILE.

DRIVE PILES AT END BENT NO. 1 AND END BENT NO. 2 TO A REQUIRED DRIVING RESISTANCE OF 120 TONS PER PILE.

STEEL H-PILE POINTS ARE REQUIRED FOR H-PILES AT END BENT NO. 1 AND END BENT NO. 2. FOR STEEL PILE POINTS, SEE SECTION 450 OF THE STANDARD SPECIFICATIONS.

### SAMPLE BAR REPLACEMENT

| SIZE | LENGTH |
|---|---|
| #3 | 6'-2" |
| #4 | 7'-4" |
| #5 | 8'-6" |
| #6 | 9'-8" |
| #7 | 10'-10" |
| #8 | 12'-0" |
| #9 | 13'-2" |
| #10 | 14'-6" |
| #11 | 15'-10" |

NOTE:
SAMPLE BAR REPLACEMENT LENGTHS BASED ON 30" (SAMPLE LENGTH) PLUS TWO SPLICE LENGTHS AND $f_y$ = 60ksi.

## TOTAL BILL OF MATERIAL

| | REMOVAL OF EXISTING STRUCTURE | ASBESTOS ASSESSMENT | UNCLASSIFIED STRUCTURE EXCAVATION | CLASS A CONCRETE | BRIDGE APPROACH SLABS | REINFORCING STEEL | PILE DRIVING EQUIPMENT SETUP FOR HP 12 X 53 STEEL PILES | HP 12 X 53 STEEL PILES | | STEEL PILE POINTS | VERTICAL CONCRETE BARRIER RAIL | RIP RAP CLASS II (2'-0" THICK) | GEOTEXTILE FOR DRAINAGE | ELASTOMERIC BEARINGS | 3'-0" X 1'-9" PRESTRESSED CONCRETE CORED SLABS | |
|---|---|---|---|---|---|---|---|---|---|---|---|---|---|---|---|---|
| | LUMP SUM | LUMP SUM | LUMP SUM | CU. YARDS | LUMP SUM | LBS. | EACH | NO. | LIN. FT. | EACH | LIN. FT. | TONS | SQ. YARDS | LUMP SUM | NO. | LIN. FT. |
| SUPERSTRUCTURE | | LUMP SUM | | | LUMP SUM | | | | | | 110.25 | | | LUMP SUM | 11 | 605.00 |
| END BENT 1 | | | LUMP SUM | 14.2 | | 2115 | 7 | 7 | 105 | 7 | | 90 | 95 | | | |
| END BENT 2 | | | LUMP SUM | 14.2 | | 2115 | 7 | 7 | 140 | 7 | | 85 | 75 | | | |
| TOTAL | LUMP SUM | LUMP SUM | LUMP SUM | 28.4 | LUMP SUM | 4230 | 14 | 14 | 245 | 14 | 110.25 | 175 | 170 | LUMP SUM | 11 | 605.00 |

PROJECT NO. B-5997
JOHNSTON COUNTY
STATION: 14+25.50 -L-

SHEET 2 OF 2

STATE OF NORTH CAROLINA
DEPARTMENT OF TRANSPORTATION
RALEIGH

# GENERAL DRAWING

BRIDGE ON SR 1399
OVER POLE BRANCH
BETWEEN NC 50 & SR 1328

30'-10" CLEAR ROADWAY - 90° SKEW

NORTH CAROLINA PROFESSIONAL ENGINEER SEAL 046785 ZACHARY H. BROWN
DocuSigned by: Zachary H. Brown
3/8/2019

PLANS PREPARED BY:
CALYX
ENGINEERS + CONSULTANTS
6750 TRYON ROAD
CARY, NC 27518
phone: 919.851.1912
CALYXengineers.com
NC License # F-1333

| REVISIONS | | | | | | SHEET NO. |
|---|---|---|---|---|---|---|
| NO. | BY: | DATE: | NO. | BY: | DATE: | S-2 |
| 1 | | | 3 | | | TOTAL SHEETS |
| 2 | | | 4 | | | 14 |

DRAWN BY : W. B. ALLEN DATE : 6/18
CHECKED BY : Z. H. BROWN DATE : 6/18
DESIGN ENGINEER OF RECORD: Z. H. BROWN DATE : 6/18

DOCUMENT NOT CONSIDERED FINAL UNLESS ALL SIGNATURES COMPLETED

10/29/2018 10:38:45 AM R:\Structures\B5997_SMU_G02_50027.dgn

DocuSign Envelope ID: 1576A943-B2EB-4096-AAA6-003078224 0B5

# LOAD AND RESISTANCE FACTOR RATING (LRFD) SUMMARY FOR PRESTRESSED CONCRETE GIRDERS

| LEVEL | | VEHICLE | WEIGHT (W) (TONS) | CONTROLLING LOAD RATING | MINIMUM RATING FACTORS (RF) | TONS = W X RF | STRENGTH I LIMIT STATE | | | | | | | | | | | SERVICE III LIMIT STATE | | | | | | COMMENT NUMBER |
|---|---|---|---|---|---|---|---|---|---|---|---|---|---|---|---|---|---|---|---|---|---|---|---|---|
| | | | | | | | | MOMENT | | | | | SHEAR | | | | | | MOMENT | | | | | |
| | | | | | | | LIVELOAD FACTORS | DISTRIBUTION FACTORS (DF) | RATING FACTOR | SPAN | GIRDER LOCATION | DISTANCE FROM LEFT END OF SPAN (ft) | DISTRIBUTION FACTORS (DF) | RATING FACTOR | SPAN | GIRDER LOCATION | DISTANCE FROM LEFT END OF SPAN (ft) | LIVELOAD FACTORS | DISTRIBUTION FACTORS (DF) | RATING FACTOR | SPAN | GIRDER LOCATION | DISTANCE FROM LEFT END OF SPAN (ft) | |
| DESIGN LOAD RATING | | HL-93(Inv) | N/A | 1 | 1.055 | -- | 1.75 | 0.275 | 1.23 | 55' | EL | 27 | 0.523 | 1.23 | 55' | EL | 5.4 | 0.80 | 0.275 | **1.05** | 55' | EL | **27** | |
| | | HL-93(Opr) | N/A | -- | 1.591 | -- | 1.35 | 0.275 | 1.59 | 55' | EL | 27 | 0.523 | 1.59 | 55' | EL | 5.4 | N/A | -- | -- | -- | -- | -- | |
| | | HS-20(Inv) | 36.000 | 2 | 1.322 | 47.585 | 1.75 | 0.275 | 1.54 | 55' | EL | 27 | 0.523 | 1.47 | 55' | EL | 5.4 | 0.80 | 0.275 | **1.32** | 55' | EL | **27** | |
| | | HS-20(Opr) | 36.000 | -- | 1.9 | 68.396 | 1.35 | 0.275 | 1.99 | 55' | EL | 27 | 0.523 | 1.9 | 55' | EL | 5.4 | N/A | -- | -- | -- | -- | -- | |
| LEGAL LOAD RATING | SV | SNSH | 13.500 | -- | 2.776 | 37.476 | 1.4 | 0.275 | 4.04 | 55' | EL | 27 | 0.523 | 4.17 | 55' | EL | 5.4 | 0.80 | 0.275 | 2.78 | 55' | EL | 27 | |
| | | SNGARBS2 | 20.000 | -- | 2.155 | 43.095 | 1.4 | 0.275 | 3.14 | 55' | EL | 27 | 0.523 | 3.02 | 55' | EL | 5.4 | 0.80 | 0.275 | 2.15 | 55' | EL | 27 | |
| | | SNAGRIS2 | 22.000 | -- | 2.079 | 45.734 | 1.4 | 0.275 | 3.03 | 55' | EL | 27 | 0.523 | 2.83 | 55' | EL | 5.4 | 0.80 | 0.275 | 2.08 | 55' | EL | 27 | |
| | | SNCOTTS3 | 27.250 | -- | 1.384 | 37.708 | 1.4 | 0.275 | 2.01 | 55' | EL | 27 | 0.523 | 2.09 | 55' | EL | 5.4 | 0.80 | 0.275 | 1.38 | 55' | EL | 27 | |
| | | SNAGGRS4 | 34.925 | -- | 1.189 | 41.527 | 1.4 | 0.275 | 1.73 | 55' | EL | 27 | 0.523 | 1.77 | 55' | EL | 5.4 | 0.80 | 0.275 | 1.19 | 55' | EL | 27 | |
| | | SNS5A | 35.550 | -- | 1.16 | 41.255 | 1.4 | 0.275 | 1.69 | 55' | EL | 27 | 0.523 | 1.82 | 55' | EL | 5.4 | 0.80 | 0.275 | 1.16 | 55' | EL | 27 | |
| | | SNS6A | 39.950 | -- | 1.079 | 43.102 | 1.4 | 0.275 | 1.57 | 55' | EL | 27 | 0.523 | 1.68 | 55' | EL | 5.4 | 0.80 | 0.275 | 1.08 | 55' | EL | 27 | |
| | | SNS7B | 42.000 | -- | 1.028 | 43.175 | 1.4 | 0.275 | 1.5 | 55' | EL | 27 | 0.523 | 1.67 | 55' | EL | 5.4 | 0.80 | 0.275 | 1.03 | 55' | EL | 27 | |
| | TTST | TNAGRIT3 | 33.000 | -- | 1.32 | 43.556 | 1.4 | 0.275 | 1.92 | 55' | EL | 27 | 0.523 | 1.98 | 55' | EL | 5.4 | 0.80 | 0.275 | 1.32 | 55' | EL | 27 | |
| | | TNT4A | 33.075 | -- | 1.33 | 43.979 | 1.4 | 0.275 | 1.94 | 55' | EL | 27 | 0.523 | 1.91 | 55' | EL | 5.4 | 0.80 | 0.275 | 1.33 | 55' | EL | 27 | |
| | | TNT6A | 41.600 | -- | 1.101 | 45.811 | 1.4 | 0.275 | 1.6 | 55' | EL | 27 | 0.523 | 1.83 | 55' | EL | 5.4 | 0.80 | 0.275 | 1.10 | 55' | EL | 27 | |
| | | TNT7A | 42.000 | -- | 1.114 | 46.804 | 1.4 | 0.275 | 1.62 | 55' | EL | 27 | 0.523 | 1.71 | 55' | EL | 5.4 | 0.80 | 0.275 | 1.11 | 55' | EL | 27 | |
| | | TNT7B | 42.000 | -- | 1.163 | 48.848 | 1.4 | 0.275 | 1.69 | 55' | EL | 27 | 0.523 | 1.62 | 55' | EL | 5.4 | 0.80 | 0.275 | 1.16 | 55' | EL | 27 | |
| | | TNAGRIT4 | 43.000 | -- | 1.101 | 47.33 | 1.4 | 0.275 | 1.6 | 55' | EL | 27 | 0.523 | 1.56 | 55' | EL | 5.4 | 0.80 | 0.275 | 1.10 | 55' | EL | 27 | |
| | | TNAGT5A | 45.000 | -- | 1.031 | 46.405 | 1.4 | 0.275 | 1.5 | 55' | EL | 27 | 0.523 | 1.58 | 55' | EL | 5.4 | 0.80 | 0.275 | 1.03 | 55' | EL | 27 | |
| | | TNAGT5B | 45.000 | 3 | 1.013 | 45.582 | 1.4 | 0.275 | 1.47 | 55' | EL | 27 | 0.523 | 1.48 | 55' | EL | 5.4 | 0.80 | 0.275 | **1.01** | 55' | EL | **27** | |

## LOAD FACTORS:

| | LIMIT STATE | $\gamma_{DC}$ | $\gamma_{DW}$ |
|---|---|---|---|
| DESIGN LOAD RATING FACTORS | STRENGTH I | 1.25 | 1.50 |
| | SERVICE III | 1.00 | 1.00 |

## NOTES:

MINIMUM RATING FACTORS ARE BASED ON THE STRENGTH I AND SERVICE III LIMIT STATES.

ALLOWABLE STRESSES FOR SERVICE III LIMIT STATE ARE AS REQUIRED FOR DESIGN.

## COMMENTS:

1.
2.
3.
4.

(#) CONTROLLING LOAD RATING

(1) DESIGN LOAD RATING (HL-93)

(2) DESIGN LOAD RATING (HS-20)

(3) LEGAL LOAD RATING **

** SEE CHART FOR VEHICLE TYPE

GIRDER LOCATION

I - INTERIOR GIRDER
EL - EXTERIOR LEFT GIRDER
ER - EXTERIOR RIGHT GIRDER

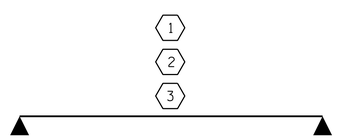


LRFR SUMMARY

FOR SPAN 'A'

PROJECT NO. B-5997

JOHNSTON COUNTY

STATION: 14+25.50 -L-

PLANS PREPARED BY:

CALYX ENGINEERS + CONSULTANTS
6750 TRYON ROAD
CARY, NC 27518
phone: 919.851.1912
CALYXengineers.com
NC License # F-1333

DOCUMENT NOT CONSIDERED FINAL UNLESS ALL SIGNATURES COMPLETED

THIS STANDARD DRAWING REVIEWED & ADOPTED FOR USE AT THE REFERENCED LOCATION BY THE UNDERSIGNED:

DocuSigned by: Zachary H. Brown
DS-CEDE0B4E7
NORTH CAROLINA PROFESSIONAL SEAL 047785 ENGINEER ZACHARY H. BROWN
3/8/2019

STATE OF NORTH CAROLINA
DEPARTMENT OF TRANSPORTATION
RALEIGH

STANDARD

LRFR SUMMARY FOR 55' CORED SLAB UNIT 90° SKEW

(NON-INTERSTATE TRAFFIC)

| REVISIONS | | | | | | SHEET NO. |
|---|---|---|---|---|---|---|
| NO. | BY: | DATE: | NO. | BY: | DATE: | S-3 |
| 1 | | | 3 | | | TOTAL SHEETS |
| 2 | | | 4 | | | 14 |

STD. NO. 21LRFR1_90S_55L

| | | | |
|---|---|---|---|
| ASSEMBLED BY : | W. B. ALLEN | DATE : | 6/18 |
| CHECKED BY : | Z. H. BROWN | DATE : | 6/18 |
| DRAWN BY : CVC | 6/10 | | |
| CHECKED BY : DNS | 6/10 | | |

10/29/2018 11:38:46 AM R:\Structures\B5997_SMU_GD3_500277.dgn

DocuSign Envelope ID: 1576A943-B2EB-4096-AAA6-003078224 0B5

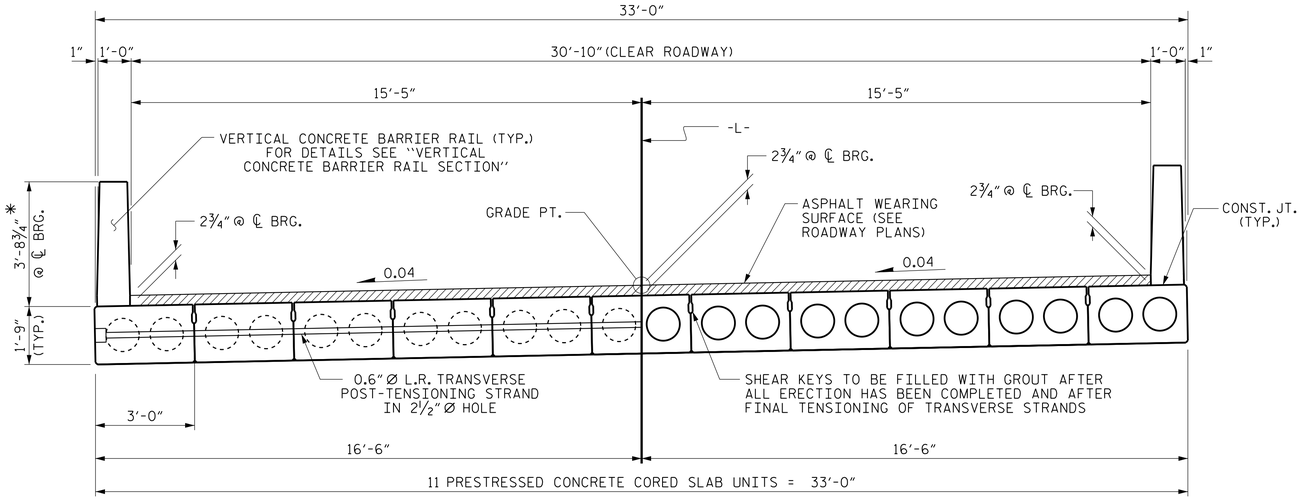


HALF SECTION
AT INTERMEDIATE DIAPHRAGMS

HALF SECTION
THROUGH VOIDS

## TYPICAL SECTION

* - THE MAXIMUM BARRIER RAIL HEIGHT AND ASPHALT THICKNESS IS SHOWN. THE HEIGHT OF THE BARRIER RAIL AND ASPHALT THICKNESS VARIES WHILE THE TOP OF THE BARRIER RAIL FOLLOWS THE PROFILE OF THE GUTTERLINE. FOR RAIL HEIGHT DETAILS AND ASPHALT THICKNESS SEE THE "VERTICAL CONCRETE BARRIER RAIL SECTION" DETAIL.

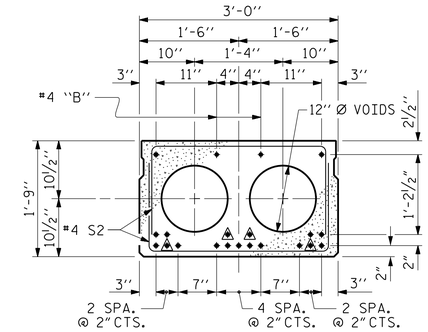


INTERIOR SLAB SECTION
(55' UNIT)
(19 STRANDS REQUIRED)

## 0.6" Ø LOW RELAXATION STRAND LAYOUT

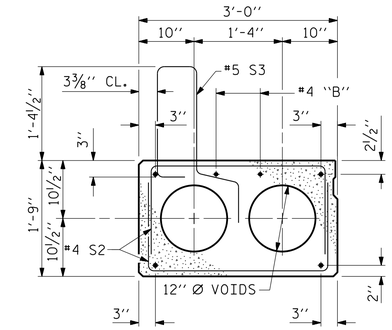


## EXT. SLAB SECTION

(FOR PRESTRESSED STRAND LAYOUT, SEE INTERIOR SLAB SECTION.)

◬ BOND SHALL BE BROKEN ON THESE STRANDS FOR A DISTANCE OF 6'-0" FROM END OF CORED SLAB UNIT. SEE STANDARD SPECIFICATIONS, ARTICLE 1078-7.

◙ BOND SHALL BE BROKEN ON THESE STRANDS FOR A DISTANCE OF 2'-0" FROM END OF CORED SLAB UNIT. SEE STANDARD SPECIFICATIONS, ARTICLE 1078-7.

◉ OPTIONAL FULL LENGTH DEBONDED STRANDS. THESE STRANDS ARE NOT REQUIRED. IF THE FABRICATOR CHOOSES TO INCLUDE THESE STRANDS IN THE CORED SLAB UNIT, THE STRANDS SHALL BE DEBONDED FOR THE FULL LENGTH OF THE UNIT AT NO ADDITIONAL COST. SEE STANDARD SPECIFICATIONS, ARTICLE 1078-7.

## DEBONDING LEGEND

FIXED END

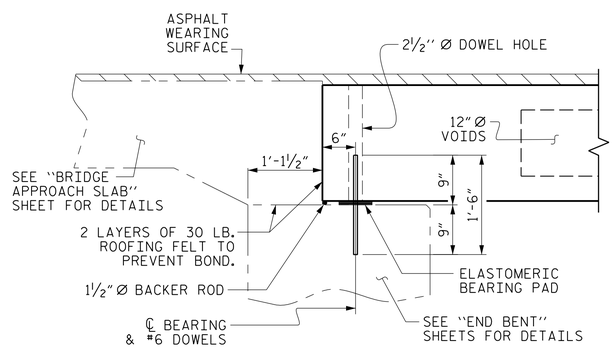


## SECTION AT END BENT

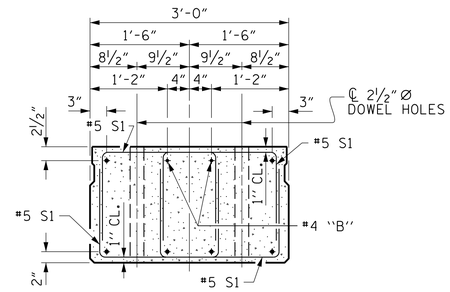


## END ELEVATION

SHOWING PLACEMENT OF DOUBLE STIRRUPS AND LOCATION OF DOWEL HOLES. (STRAND LAYOUT NOT SHOWN.) INTERIOR SLAB UNIT SHOWN-EXTERIOR SLAB UNIT SIMILAR EXCEPT SHEAR KEY LOCATION.

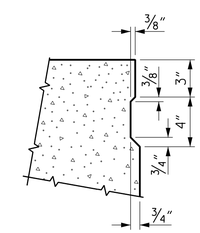


## SHEAR KEY DETAIL

NOTE: OMIT SHEAR KEY ON OUTSIDE FACE OF EXTERIOR CORED SLABS.

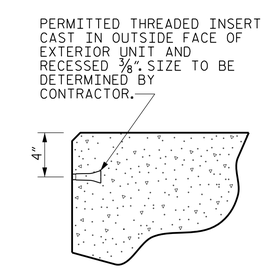


THREADED INSERT DETAIL

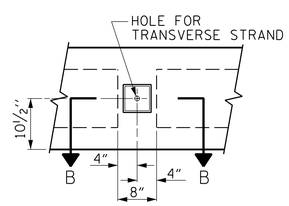


ELEVATION VIEW

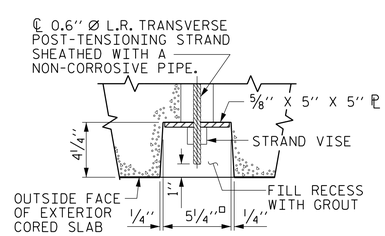


SECTION B-B

## GROUTED RECESS AT END OF POST-TENSIONED STRAND OF CORED SLABS

PROJECT NO. B-5997
JOHNSTON COUNTY
STATION: 14+25.50 -L-

SHEET 1 OF 3

STATE OF NORTH CAROLINA
DEPARTMENT OF TRANSPORTATION
RALEIGH

# 3'-0" X 1'-9" PRESTRESSED CONCRETE CORED SLAB UNIT

30'-10" CLEAR ROADWAY - 90° SKEW

NORTH CAROLINA PROFESSIONAL SEAL ENGINEER ZACHARY H. BROWN 044785
Zachary H. Brown
DocuSigned by:
3/8/2019

PLANS PREPARED BY:
CALYX ENGINEERS + CONSULTANTS
6750 TRYON ROAD
CARY, NC 27518
phone: 919.851.1912
CALYXengineers.com
NC License # F-1333

DOCUMENT NOT CONSIDERED FINAL UNLESS ALL SIGNATURES COMPLETED

| REVISIONS | | | | | | | | SHEET NO. |
|---|---|---|---|---|---|---|---|---|
| NO. | BY: | DATE: | NO. | BY: | DATE: | | | S-4 |
| 1 | | | 3 | | | | | TOTAL SHEETS |
| 2 | | | 4 | | | | | 14 |

| | | | |
|---|---|---|---|
| DRAWN BY : | W. B. ALLEN | DATE : | 6/18 |
| CHECKED BY : | Z. H. BROWN | DATE : | 6/18 |
| DESIGN ENGINEER OF RECORD: | Z. H. BROWN | DATE : | 6/18 |

10/29/2018 11:38:47 AM R:\Structures\B5997_SMU_CSI_500277.dgn

DocuSign Envelope ID: 1576A943-B2EB-4096-AAA6-003078224 0B5

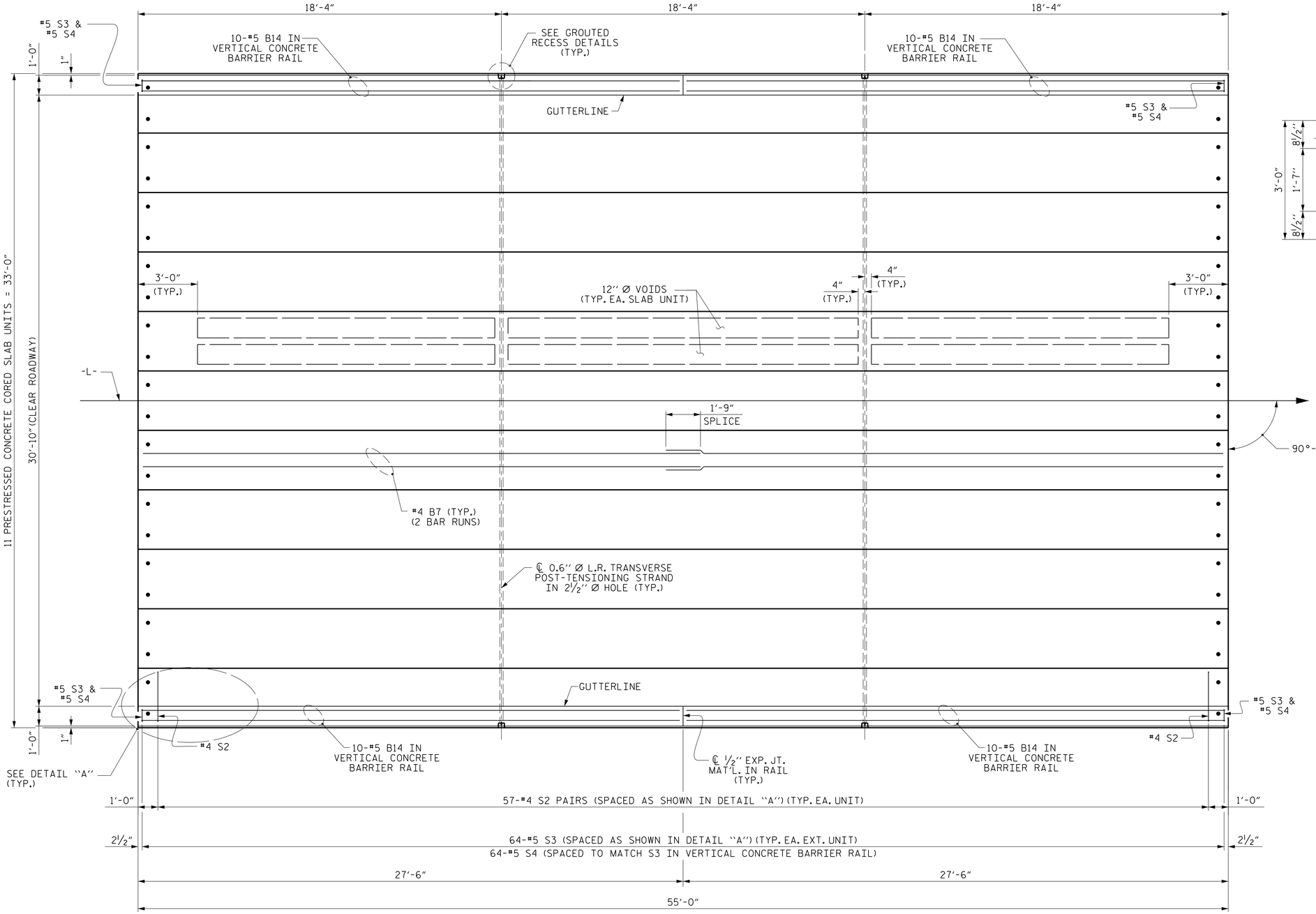


## PLAN OF UNIT

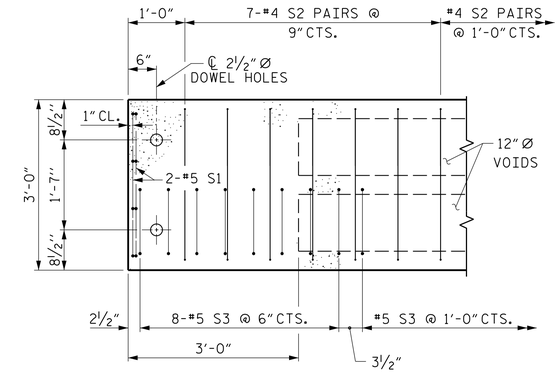


## DETAIL "A"

(TYPICAL EACH END OF UNIT)
NOTE: EXTERIOR UNIT SHOWN - INTERIOR UNIT SIMILAR EXCEPT OMIT #5 S3 BARS.

PROJECT NO. B-5997

JOHNSTON COUNTY

STATION: 14+25.50 -L-

SHEET 2 OF 3

**DOCUMENT NOT CONSIDERED FINAL UNLESS ALL SIGNATURES COMPLETED**

THIS STANDARD DRAWING REVIEWED & ADOPTED FOR USE AT THE REFERENCED LOCATION BY THE UNDERSIGNED:

Docusigned by: Zachary H. Brown
DOCUSIGN ENVELOPE ID: 1576A943-B2EB-4096-AAA6-003078224 0B5
NORTH CAROLINA PROFESSIONAL ENGINEER SEAL 046885 ZACHARY H. BROWN
3/8/2019

PLANS PREPARED BY:
CALYX ENGINEERS + CONSULTANTS
6750 TRYON ROAD
CARY, NC 27518
phone: 919.851.1912
CALYXengineers.com
NC License # F-1333

STATE OF NORTH CAROLINA
DEPARTMENT OF TRANSPORTATION
RALEIGH

# PLAN OF 55' UNIT
# 30'-10" CLEAR ROADWAY
# 90° SKEW

| REVISIONS | | | | | | |
|---|---|---|---|---|---|---|
| NO. | BY: | DATE: | NO. | BY: | DATE: | |
| 1 | | | 3 | | | |
| 2 | | | 4 | | | |

SHEET NO. S-5
TOTAL SHEETS 14

| | | | |
|---|---|---|---|
| ASSEMBLED BY : | W. B. ALLEN | DATE : | 6/18 |
| CHECKED BY : | Z. H. BROWN | DATE : | 6/18 |
| DRAWN BY : DGE 3/09 | REV. 12/5/11 | MAA/AAC | |
| CHECKED BY : BCH 3/09 | REV. 8/14 | MAA/TMG | |

10/29/2018 11:38:48 AM R:\Structures\B5997_SMU_CS2_500277.dgn

STD. NO. 21" PCS_33_90S_55L

DocuSign Envelope ID: 1576A943-B2EB-4096-AAA6-003078224 0B5

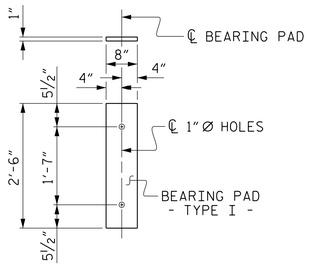


FIXED END
( TYPE I - 22 REQ'D )

# ELASTOMERIC BEARING DETAILS

ELASTOMER IN ALL BEARINGS SHALL BE 50 DUROMETER HARDNESS.

| GRADE 270 STRANDS | |
|---|---|
| | 0.6" Ø L.R. |
| AREA ( SQUARE INCHES ) | 0.217 |
| ULTIMATE STRENGTH ( LBS. PER STRAND ) | 58,600 |
| APPLIED PRESTRESS ( LBS. PER STRAND ) | 43,950 |

| CONCRETE RELEASE STRENGTH | |
|---|---|
| | |
| UNIT | PSI |
| 55' UNITS | 4900 |

| DEAD LOAD DEFLECTION AND CAMBER | |
|---|---|
| | 3'-0" x 1'-9" |
| 55' CORED SLAB UNIT | 0.6" Ø L.R. STRAND |
| CAMBER ( SLAB ALONE IN PLACE ) | 1½" ↑ |
| DEFLECTION DUE TO SUPERIMPOSED DEAD LOAD** | ⅜" ↓ |
| FINAL CAMBER | 1⅛" ↑ |

** INCLUDES FUTURE WEARING SURFACE

| CORED SLABS REQUIRED | | | |
|---|---|---|---|
| | NUMBER | LENGTH | TOTAL LENGTH |
| 55' UNIT | | | |
| EXTERIOR C.S. | 2 | 55'-0" | 110'-0" |
| INTERIOR C.S. | 9 | 55'-0" | 495'-0" |
| TOTAL | 11 | | 605'-0" |

## BAR TYPES

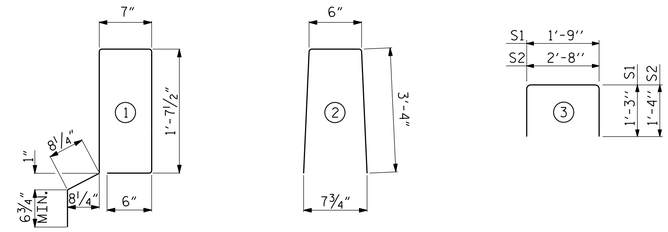


ALL BAR DIMENSIONS ARE OUT TO OUT

## BILL OF MATERIAL FOR VERTICAL CONCRETE BARRIER RAIL

| BAR | BARS PER PAIR OF EXTERIOR UNITS | TOTAL NO. | SIZE | TYPE | LENGTH | WEIGHT |
|---|---|---|---|---|---|---|
| | 55' UNIT | | | | | |
| | | | | | | |
| * B14 | 40 | 40 | #5 | STR | 27'-1" | 1130 |
| | | | | | | |
| * S4 | 128 | 128 | #5 | 2 | 7'-2" | 957 |
| | | | | | | |
| * EPOXY COATED REINFORCING STEEL | | | | LBS. | | 2087 |
| CLASS AA CONCRETE | | | | CU.YDS. | | 14.1 |
| TOTAL VERTICAL CONCRETE BARRIER RAIL | | | | LN. FT. | | 110.25 |

## BILL OF MATERIAL FOR ONE 55' CORED SLAB UNIT

| | | | | EXTERIOR UNIT | | INTERIOR UNIT | |
|---|---|---|---|---|---|---|---|
| BAR | NUMBER | SIZE | TYPE | LENGTH | WEIGHT | LENGTH | WEIGHT |
| B7 | 4 | #4 | STR | 28'-3" | 75 | 28'-3" | 75 |
| | | | | | | | |
| S1 | 8 | #5 | 3 | 4'-3" | 35 | 4'-3" | 35 |
| S2 | 114 | #4 | 3 | 5'-4" | 406 | 5'-4" | 406 |
| * S3 | 64 | #5 | 1 | 5'-7" | 373 | | |
| | | | | | | | |
| | | | | | | | |
| REINFORCING STEEL | | | LBS. | | 516 | | 516 |
| * EPOXY COATED REINFORCING STEEL | | | LBS. | | 373 | | |
| 6500 P.S.I. CONCRETE | | | CU. YDS. | | 7.8 | | 7.8 |
| | | | | | | | |
| 0.6" Ø L.R. STRANDS | | | No. | | 19 | | 19 |

# NOTES

ALL PRESTRESSING STRANDS SHALL BE 7-WIRE LOW RELAXATION GRADE 270 STRANDS AND SHALL CONFORM TO AASHTO M203 EXCEPT FOR SAMPLING REQUIREMENTS WHICH SHALL BE IN ACCORDANCE WITH THE STANDARD SPECIFICATIONS.

ALL REINFORCING STEEL CAST WITH THE CORED SLAB SECTIONS SHALL BE GRADE 60 AND SHALL BE INCLUDED IN THE UNIT PRICE BID FOR PRESTRESSED CONCRETE CORED SLABS.

RECESSES FOR TRANSVERSE STRANDS SHALL BE GROUTED AFTER THE TENSIONING OF THE STRANDS.

THE 2½" Ø DOWEL HOLES AT FIXED ENDS OF SLAB SECTIONS SHALL BE FILLED WITH NON-SHRINK GROUT.

THE BACKER RODS SHALL CONFORM TO THE REQUIREMENTS OF TYPE M BOND BREAKER. SEE SECTION 1028 OF THE STANDARD SPECIFICATIONS.

WHEN CORED SLABS ARE CAST, AN INTERNAL HOLD-DOWN SYSTEM SHALL BE EMPLOYED TO PREVENT VOIDS FROM RISING OR MOVING SIDEWAYS. AT LEAST SIX WEEKS PRIOR TO CASTING CORED SLABS, THE CONTRACTOR SHALL SUBMIT TO THE ENGINEER FOR REVIEW AND COMMENT, DETAILED DRAWINGS OF THE PROPOSED HOLD-DOWN SYSTEM. IN ADDITION TO STRUCTURAL DETAILS, LOCATION AND SPACING OF THE HOLD-DOWNS SHALL BE INDICATED.

ALL REINFORCING STEEL IN THE VERTICAL CONCRETE BARRIER RAIL SHALL BE EPOXY COATED.

PRESTRESSING STRANDS SHALL BE CUT FLUSH WITH THE CORED SLAB UNIT ENDS.

APPLY EPOXY PROTECTIVE COATING TO CORED SLAB UNIT ENDS.

GROOVED CONTRACTION JOINTS, ½" IN DEPTH, SHALL BE TOOLED IN ALL EXPOSED FACES OF THE BARRIER RAIL AND IN ACCORDANCE WITH ARTICLE 825-10(B) OF THE STANDARD SPECIFICATIONS. A CONTRACTION JOINT SHALL BE LOCATED AT EACH THIRD POINT BETWEEN BARRIER RAIL EXPANSION JOINTS. ONLY ONE CONTRACTION JOINT IS REQUIRED AT MIDPOINT OF BARRIER RAIL SEGMENTS LESS THAN 20 FEET IN LENGTH AND NO CONTRACTION JOINTS ARE REQUIRED FOR THOSE SEGMENTS LESS THAN 10 FEET IN LENGTH.

FLAME CUTTING OF THE TRANSVERSE POST-TENSIONING STRAND IS NOT ALLOWED.

THE TRANSFER OF LOAD FROM THE ANCHORAGES TO THE CORED SLAB UNIT SHALL BE DONE WHEN THE CONCRETE HAS REACHED A COMPRESSIVE STRENGTH OF NOT LESS THAN THE REQUIRED STRENGTH SHOWN IN THE "CONCRETE RELEASE STRENGTH" TABLE.

FOR GROUT FOR STRUCTURES, SEE SPECIAL PROVISIONS.

THE PERMITTED THREADED INSERTS ARE DETAILED AS AN OPTION FOR THE CONTRACTOR TO ATTACH FALSEWORK AND FORMWORK DURING CONSTRUCTION.

THE PERMITTED THREADED INSERTS IN THE EXTERIOR UNITS SHALL BE SIZED BY THE CONTRACTOR, SPACED AT 4'-0" CENTERS AND GALVANIZED IN ACCORDANCE WITH SECTION 1076 OF THE STANDARD SPECIFICATIONS. STAINLESS STEEL THREADED INSERTS MAY BE USED AS AN ALTERNATE.

THE PERMITTED THREADED INSERTS SHALL BE GROUTED BY THE CONTRACTOR IMMEDIATELY FOLLOWING REMOVAL OF THE FALSEWORK.

THE COST OF THE PERMITTED THREADED INSERTS SHALL BE INCLUDED IN THE PRICE BID FOR THE PRECAST UNITS.

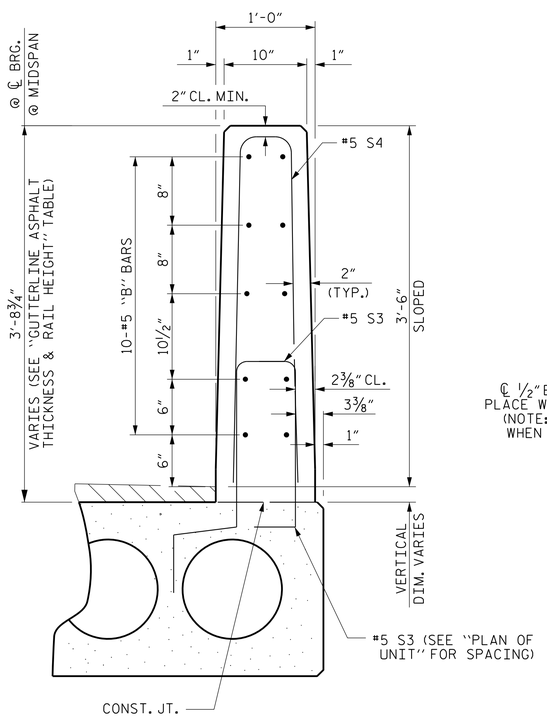


VERTICAL CONCRETE BARRIER RAIL SECTION

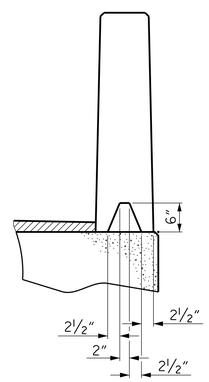


SECTION S-S
AT DAM IN OPEN JOINT
(THIS IS TO BE USED ONLY WHEN SLIP FORM IS USED)

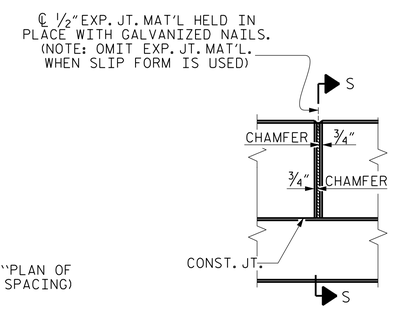


ELEVATION AT EXPANSION JOINTS

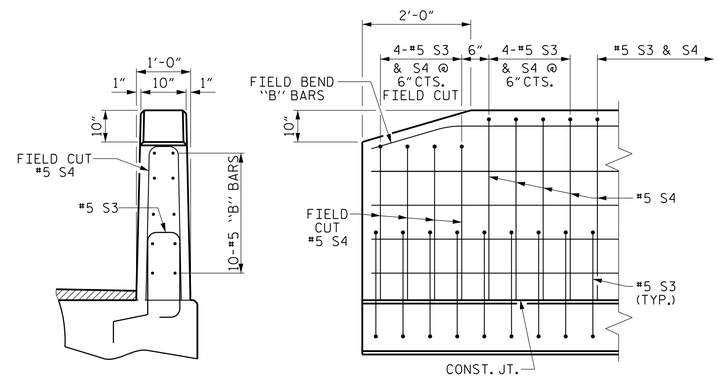


END VIEW

SIDE VIEW

END OF RAIL DETAILS

| GUTTERLINE ASPHALT THICKNESS & RAIL HEIGHT | | |
|---|---|---|
| | ASPHALT OVERLAY THICKNESS | RAIL HEIGHT |
| | @ MID-SPAN | @ MID-SPAN |
| 55' UNITS | 1⅝" | 3'-7⅝" |

PROJECT NO. B-5997

JOHNSTON COUNTY

STATION: 14+25.50 -L-

SHEET 3 OF 3

DOCUMENT NOT CONSIDERED FINAL UNLESS ALL SIGNATURES COMPLETED

THIS STANDARD DRAWING REVIEWED & ADOPTED FOR USE AT THE REFERENCED LOCATION BY THE UNDERSIGNED:

NORTH CAROLINA PROFESSIONAL SEAL 046785 ENGINEER ZACHARY H. BROWN
DocuSigned by: Zachary H. Brown
DS2EDEC0046785
3/8/2019

PLANS PREPARED BY:
CALYX ENGINEERS + CONSULTANTS
6750 TRYON ROAD
CARY, NC 27518
phone: 919.851.1912
CALYXengineers.com
NC License # F-1333

STATE OF NORTH CAROLINA
DEPARTMENT OF TRANSPORTATION
RALEIGH

STANDARD
3'-0" X 1'-9"
PRESTRESSED CONCRETE
CORED SLAB UNIT
90° SKEW

| REVISIONS | | | | | | SHEET NO. |
|---|---|---|---|---|---|---|
| NO. | BY: | DATE: | NO. | BY: | DATE: | S-6 |
| 1 | | | 3 | | | TOTAL SHEETS |
| 2 | | | 4 | | | 14 |

STD. NO. 21" PCS3_33_90S

| | | | |
|---|---|---|---|
| ASSEMBLED BY : | W. B. ALLEN | DATE : | 6/18 |
| CHECKED BY : | Z. H. BROWN | DATE : | 6/18 |
| DRAWN BY : | DGE 5/09 | REV. 5/18 | MAA/THC |
| CHECKED BY : | BCH 6/09 | | |

10/29/2018 10:38:49 AM R:\Structures\B5997_SMU_C33_50027T.dgn

DocuSign Envelope ID: 1576A943-B2EB-4096-AAA6-003078224 0B5

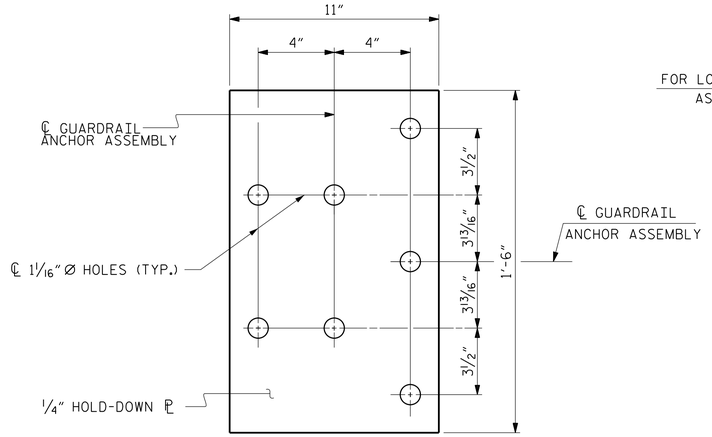


PLAN

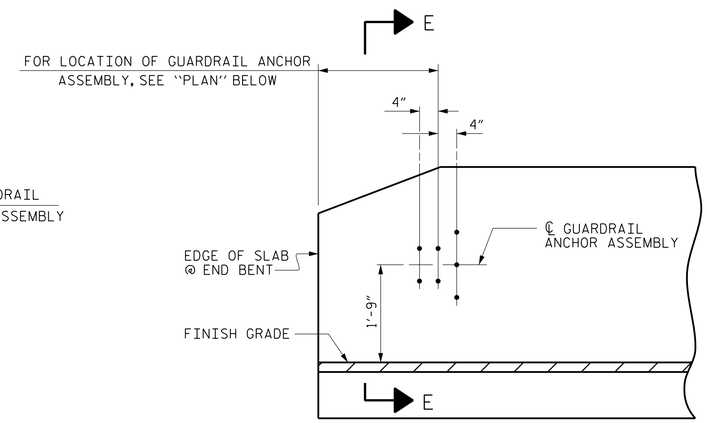


ELEVATION

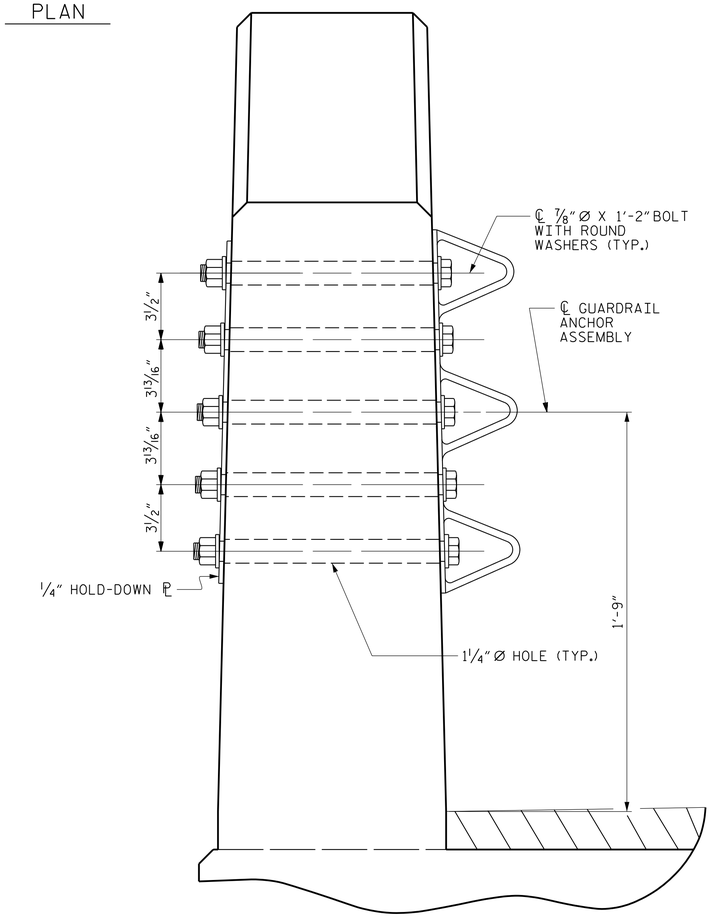


SECTION E-E

## GUARDRAIL ANCHOR ASSEMBLY DETAILS

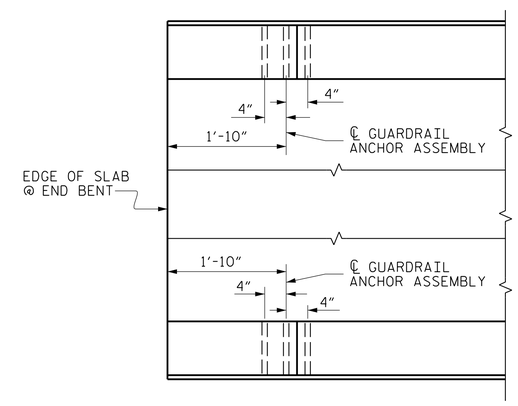


PLAN

## LOCATION OF ANCHORS FOR GUARDRAIL

END BENT #1 SHOWN, END BENT #2 SIMILAR.

## NOTES

THE GUARDRAIL ANCHOR ASSEMBLY SHALL CONSIST OF A 1/4" HOLD DOWN PLATE AND 7 - 7/8" Ø BOLTS WITH NUTS AND WASHERS.

THE HOLD-DOWN PLATE SHALL CONFORM TO AASHTO M270 GRADE 36. AFTER FABRICATION, THE HOLD-DOWN PLATE SHALL BE HOT-DIP GALVANIZED IN ACCORDANCE WITH AASHTO M111.

BOLTS SHALL CONFORM TO THE REQUIREMENTS OF ASTM A307 AND NUTS SHALL CONFORM TO THE REQUIREMENTS OF AASHTO M291. BOLTS, NUTS AND WASHERS SHALL BE GALVANIZED. (AT THE CONTRACTOR'S OPTION, STAINLESS STEEL BOLTS, NUTS AND WASHERS MAY BE USED AS AN ALTERNATE FOR THE 7/8" Ø GALVANIZED BOLTS, NUTS AND WASHERS. THEY SHALL CONFORM TO OR EXCEED THE MECHANICAL REQUIREMENTS OF ASTM A307. THE USE OF THIS ALTERNATE SHALL BE APPROVED BY THE ENGINEER.)

THE GUARDRAIL ANCHOR ASSEMBLY IS REQUIRED AT ALL POINTS WHERE APPROACH GUARDRAIL IS TO BE ATTACHED TO THE END OF BARRIER RAIL. FOR POINTS OF ATTACHMENT, SEE SKETCH.

AFTER INSTALLATION, THE EXPOSED THREAD OF THE BOLT SHALL BE BURRED WITH A SHARP POINTED TOOL.

THE COST OF THE GUARDRAIL ANCHOR ASSEMBLY SHALL BE INCLUDED IN THE UNIT CONTRACT PRICE BID FOR VERTICAL CONCRETE BARRIER RAIL.

THE VERTICAL REINFORCING BARS MAY BE SHIFTED SLIGHTLY IN THE VERTICAL CONCRETE BARRIER RAIL TO CLEAR ASSEMBLY BOLTS.

THE 1 1/4" Ø HOLES SHALL BE FORMED OR DRILLED WITH A CORE BIT. IMPACT TOOLS WILL NOT BE PERMITTED. ANY CONCRETE DAMAGED BY THIS WORK SHALL BE REPAIRED TO THE SATISFACTION OF THE ENGINEER.

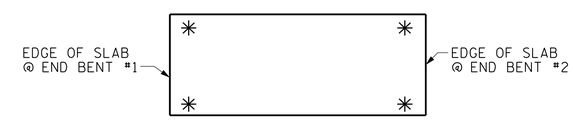


## SKETCH SHOWING POINTS OF ATTACHMENT

✳ DENOTES GUARDRAIL ANCHOR ASSEMBLY

PROJECT NO. B-5997

JOHNSTON COUNTY

STATION: 14+25.50 -L-

REPLACES BRIDGE NO. 277

NORTH CAROLINA PROFESSIONAL ENGINEER SEAL 046785 ZACHARY H. BROWN

Docu Signed by: Zachary H. Brown DS-REDEDD0A4B785

3/8/2019

PLANS PREPARED BY:

CALYX ENGINEERS + CONSULTANTS
6750 TRYON ROAD
CARY, NC 27518
phone: 919.851.1912
CALYXengineers.com
NC License # F-1333

STATE OF NORTH CAROLINA
DEPARTMENT OF TRANSPORTATION
RALEIGH

## GUARDRAIL ANCHORAGE DETAILS FOR VERTICAL CONCRETE BARRIER RAIL

| REVISIONS | | | | | | SHEET NO. |
|---|---|---|---|---|---|---|
| NO. | BY: | DATE: | NO. | BY: | DATE: | S-7 |
| 1 | | | 3 | | | TOTAL SHEETS |
| 2 | | | 4 | | | 14 |

DOCUMENT NOT CONSIDERED FINAL UNLESS ALL SIGNATURES COMPLETED

| | | | |
|---|---|---|---|
| DRAWN BY : | W. B. ALLEN | DATE : | 6/18 |
| CHECKED BY : | Z. H. BROWN | DATE : | 6/18 |
| DESIGN ENGINEER OF RECORD: | Z. H. BROWN | DATE : | 6/18 |

10/29/2018 11:38:53 AM R:\Structures\B5997_SMU_GR_S0027.dgn

DocuSign Envelope ID: 1576A943-B2EB-4096-AAA6-003078224 0B5

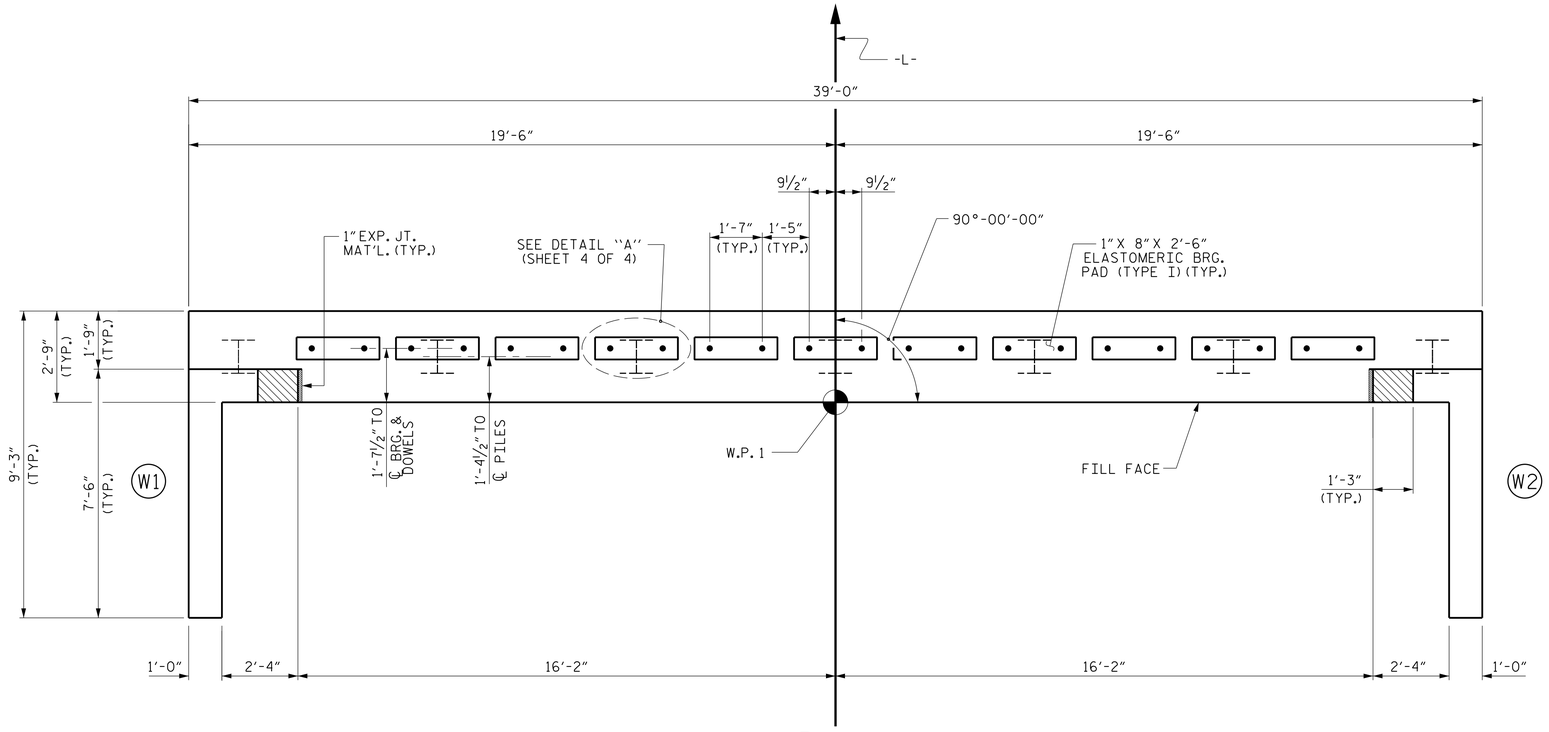


## PLAN

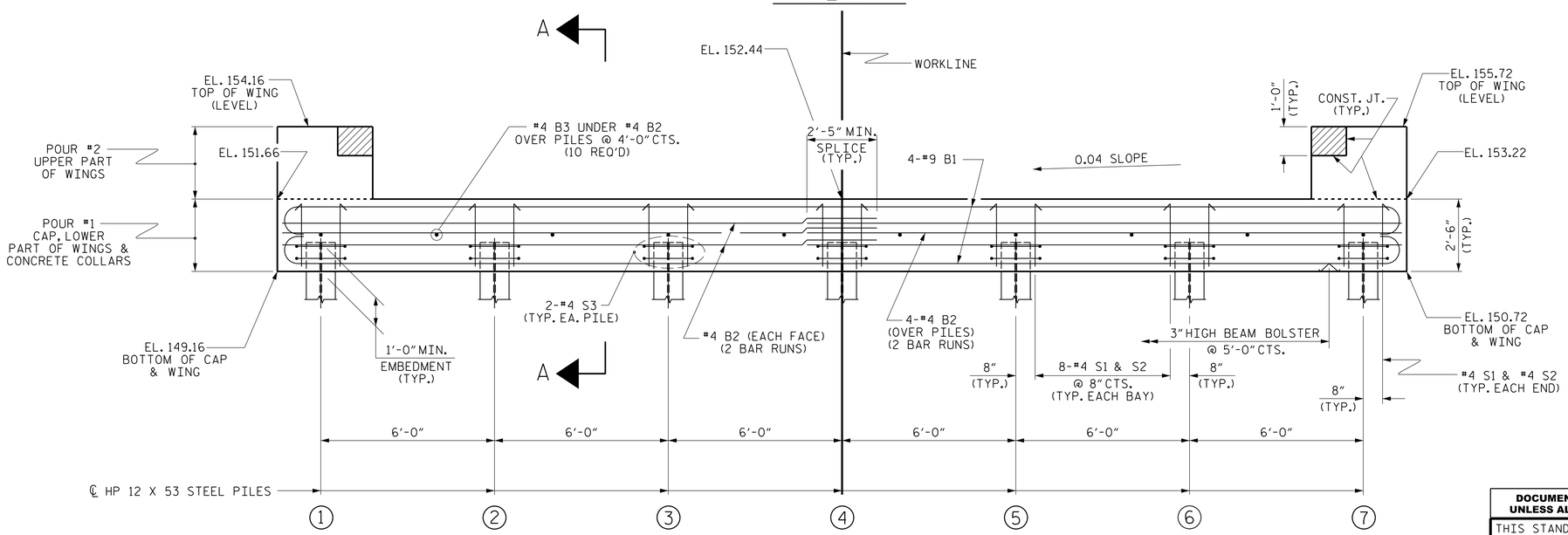


## ELEVATION

WINGS NOT SHOWN FOR CLARITY.
FOR SECTION A-A, SEE SHEET 4 OF 4.
CONCRETE COLLARS FOR STEEL PILES NOT SHOWN IN PLAN AND ELEVATION VIEWS FOR CLARITY.
SEE "CORROSION PROTECTION FOR STEEL PILES DETAIL", SHEET 4 OF 4.

## NOTES

STIRRUPS IN CAP MAY BE SHIFTED AS NECESSARY TO CLEAR DOWELS.

THE CONCRETE IN THE SHADED AREA OF THE WING SHALL BE POURED AFTER THE VERTICAL CONCRETE BARRIER RAIL IS CAST IF SLIP FORMING IS USED.

FOR PILE SPLICE DETAILS, SEE SHEET 4 OF 4.

FOR WING DETAILS, SEE SHEET 3 OF 4.

| TOP OF PILE ELEVATIONS | |
|---|---|
| 1 | 150.22 |
| 2 | 150.46 |
| 3 | 150.70 |
| 4 | 150.94 |
| 5 | 151.18 |
| 6 | 151.42 |
| 7 | 151.66 |

PROJECT NO. B-5997
JOHNSTON COUNTY
STATION: 14+25.50 -L-

SHEET 1 OF 4

STATE OF NORTH CAROLINA
DEPARTMENT OF TRANSPORTATION
RALEIGH

SUBSTRUCTURE

END BENT No. 1

PLANS PREPARED BY:
CALYX ENGINEERS + CONSULTANTS
6750 TRYON ROAD
CARY, NC 27518
phone: 919.851.1912
CALYXengineers.com
NC License # F-1333

**DOCUMENT NOT CONSIDERED FINAL UNLESS ALL SIGNATURES COMPLETED**

THIS STANDARD DRAWING REVIEWED & ADOPTED FOR USE AT THE REFERENCED LOCATION BY THE UNDERSIGNED:

NORTH CAROLINA PROFESSIONAL SEAL ENGINEER ZACHARY H. BROWN 046886
Docusigned by: Zachary H. Brown
DocuSigned by: 3/8/2019

| REVISIONS | | | | | | | | SHEET NO. |
|---|---|---|---|---|---|---|---|---|
| NO. | BY: | DATE: | NO. | BY: | DATE: | | | S-8 |
| 1 | | | 3 | | | | | TOTAL SHEETS |
| 2 | | | 4 | | | | | 14 |

| | | | |
|---|---|---|---|
| ASSEMBLED BY : W. B. ALLEN | | DATE : 6/18 | |
| CHECKED BY : Z.H. BROWN | | DATE : 6/18 | |
| DRAWN BY : DGE | 01/10 | REV. 4/15 | MAA/TMG |
| CHECKED BY : MKT | 01/10 | | |

10/29/2018 11:38:55 AM R:\Structures\B5997_SMU_EL_50027.dgn

STD. NO. EB_33_90S

DocuSign Envelope ID: 1576A943-B2EB-4096-AAA6-003078224 0B5

## NOTES

STIRRUPS IN CAP MAY BE SHIFTED AS NECESSARY TO CLEAR DOWELS.

THE CONCRETE IN THE SHADED AREA OF THE WING SHALL BE POURED AFTER THE VERTICAL CONCRETE BARRIER RAIL IS CAST IF SLIP FORMING IS USED.

FOR PILE SPLICE DETAILS, SEE SHEET 4 OF 4.

FOR WING DETAILS, SEE SHEET 3 OF 4.

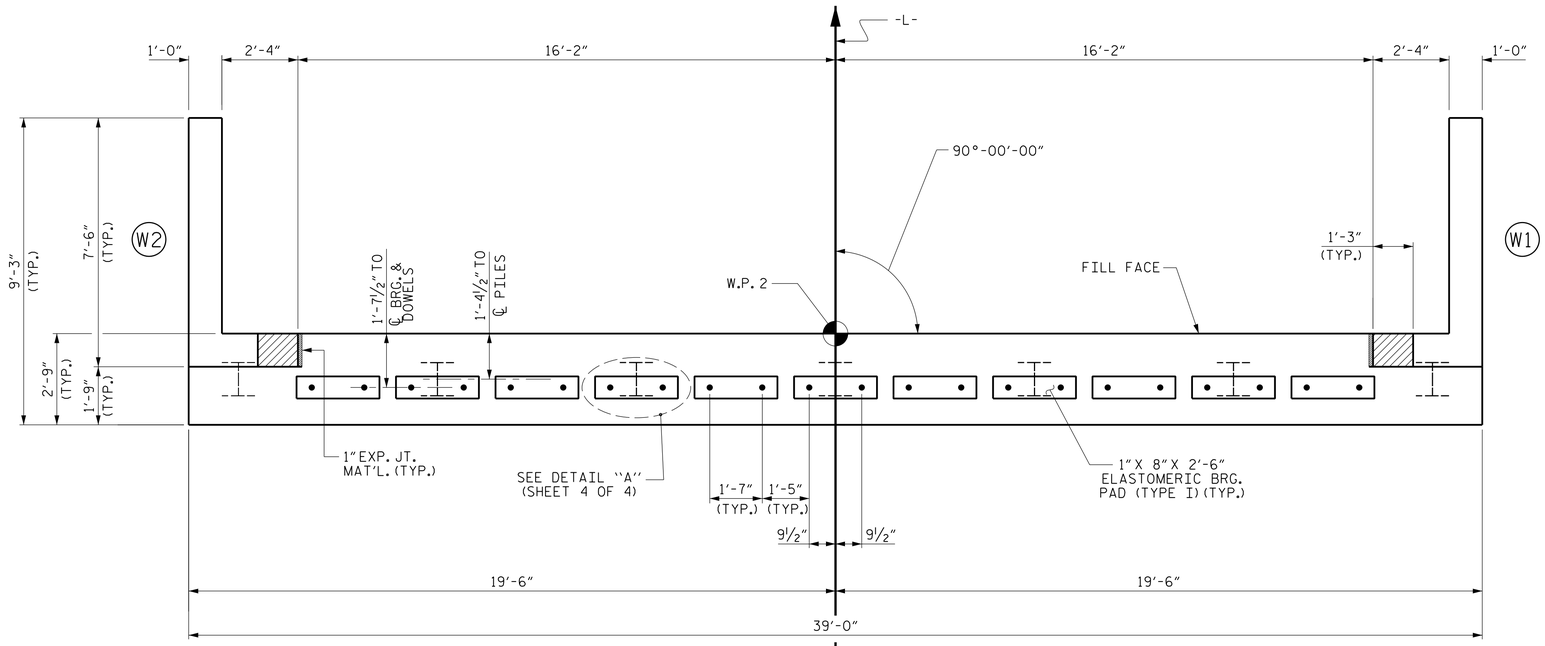


## PLAN

| TOP OF PILE ELEVATIONS | |
|---|---|
| 1 | 150.06 |
| 2 | 150.30 |
| 3 | 150.54 |
| 4 | 150.78 |
| 5 | 151.02 |
| 6 | 151.26 |
| 7 | 151.50 |

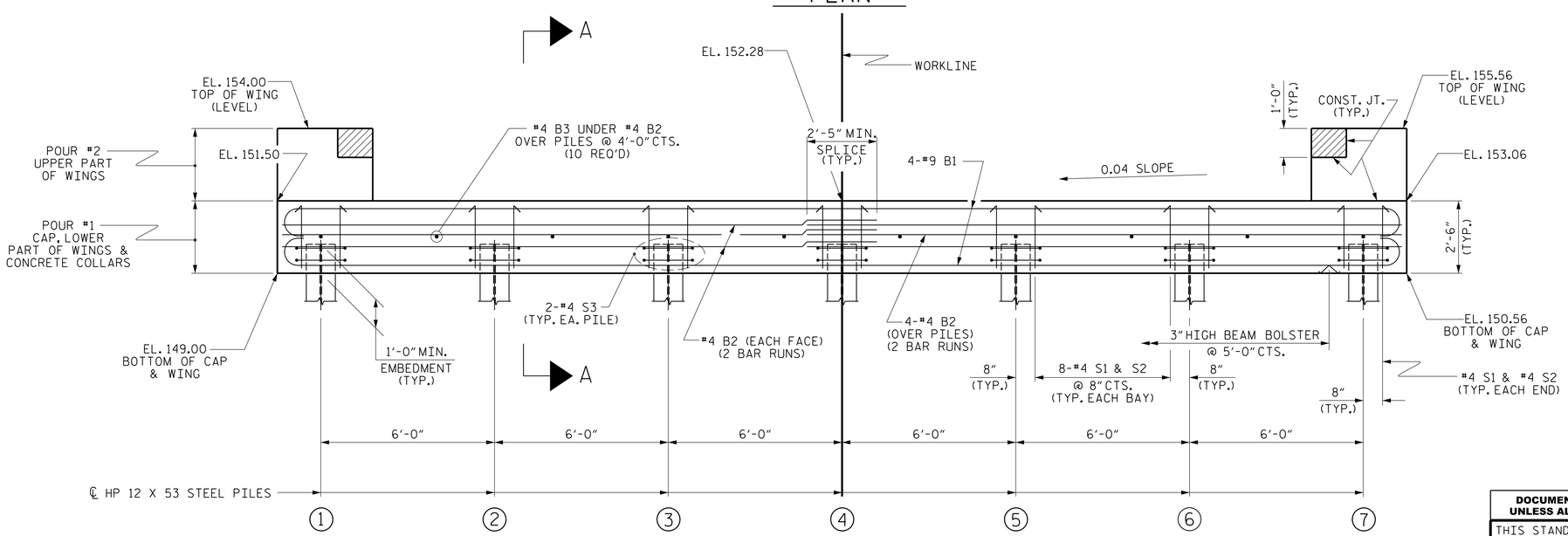


## ELEVATION

WINGS NOT SHOWN FOR CLARITY.
FOR SECTION A-A, SEE SHEET 4 OF 4.
CONCRETE COLLARS FOR STEEL PILES NOT SHOWN IN PLAN AND ELEVATION VIEWS FOR CLARITY.
SEE "CORROSION PROTECTION FOR STEEL PILES DETAIL", SHEET 4 OF 4.

PROJECT NO. B-5997
JOHNSTON COUNTY
STATION: 14+25.50 -L-

SHEET 2 OF 4

PLANS PREPARED BY:
CALYX ENGINEERS + CONSULTANTS
6750 TRYON ROAD
CARY, NC 27518
phone: 919.851.1912
CALYXengineers.com
NC License # F-1333

**DOCUMENT NOT CONSIDERED FINAL UNLESS ALL SIGNATURES COMPLETED**

THIS STANDARD DRAWING REVIEWED & ADOPTED FOR USE AT THE REFERENCED LOCATION BY THE UNDERSIGNED:

NORTH CAROLINA PROFESSIONAL SEAL 046785 ENGINEER ZACHARY H. BROWN
DocuSigned by: Zachary H. Brown
DSF3EDE0034A785
3/8/2019

STATE OF NORTH CAROLINA
DEPARTMENT OF TRANSPORTATION
RALEIGH

SUBSTRUCTURE

END BENT No. 2

| REVISIONS | | | | | | | SHEET NO. |
|---|---|---|---|---|---|---|---|
| NO. | BY: | DATE: | NO. | BY: | DATE: | | S-9 |
| 1 | | | 3 | | | | TOTAL SHEETS |
| 2 | | | 4 | | | | 14 |

| | | | |
|---|---|---|---|
| ASSEMBLED BY : W. B. ALLEN | | DATE : 6/18 | |
| CHECKED BY : Z. H. BROWN | | DATE : 6/18 | |
| DRAWN BY : DGE | 01/10 | REV. 4/15 | MAA/TMG |
| CHECKED BY : MKT | 01/10 | | |

10/29/2018 11:38:56 AM R:\Structures\B5997_SMU_E2_50027f.dgn

STD. NO. EB_33_90S

DocuSign Envelope ID: 1576A943-B2EB-4096-AAA6-003078224 0B5

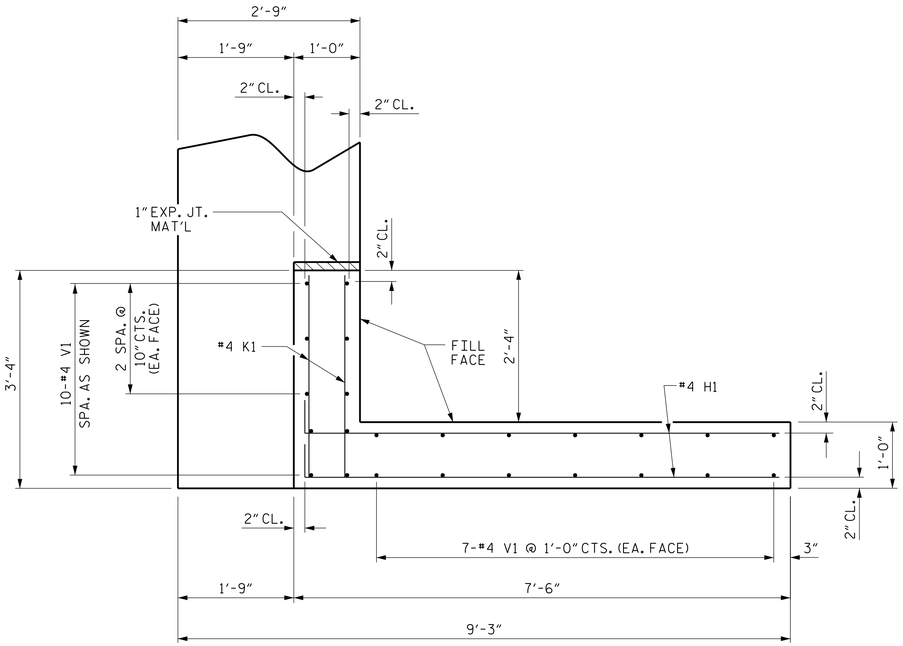


PLAN OF WING (W1)

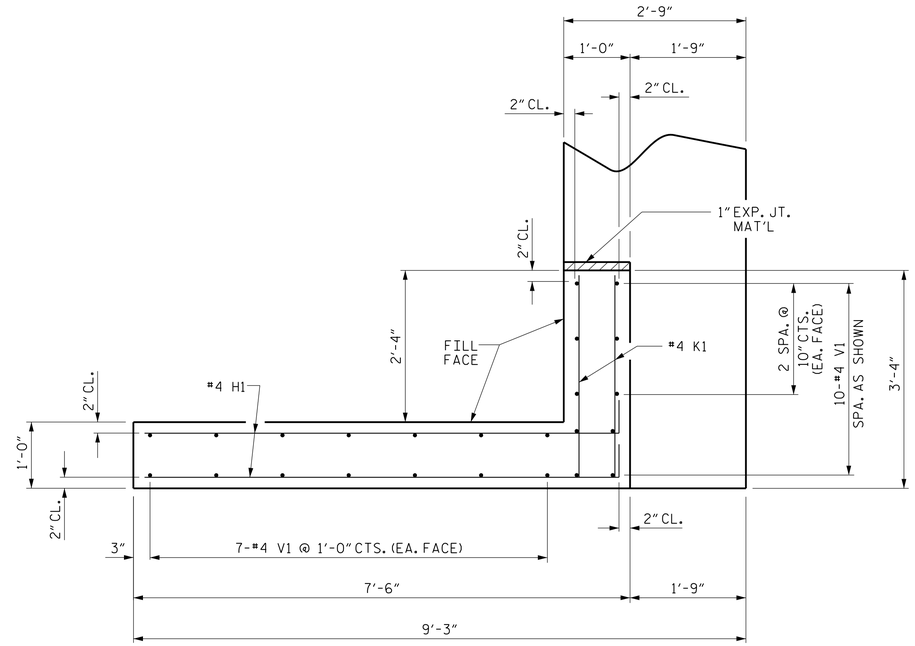


PLAN OF WING (W2)

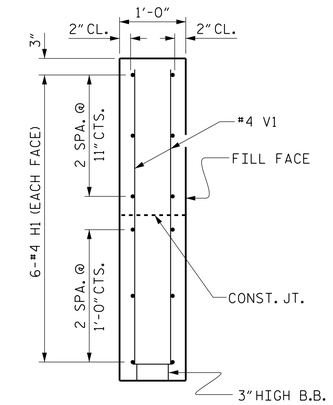


SECTION X-X

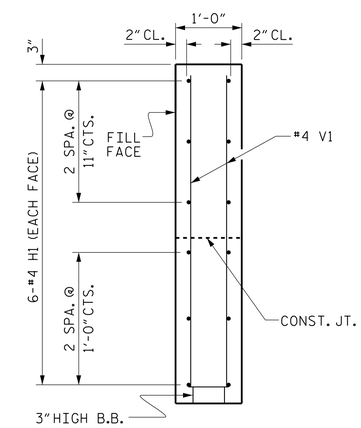


SECTION Y-Y

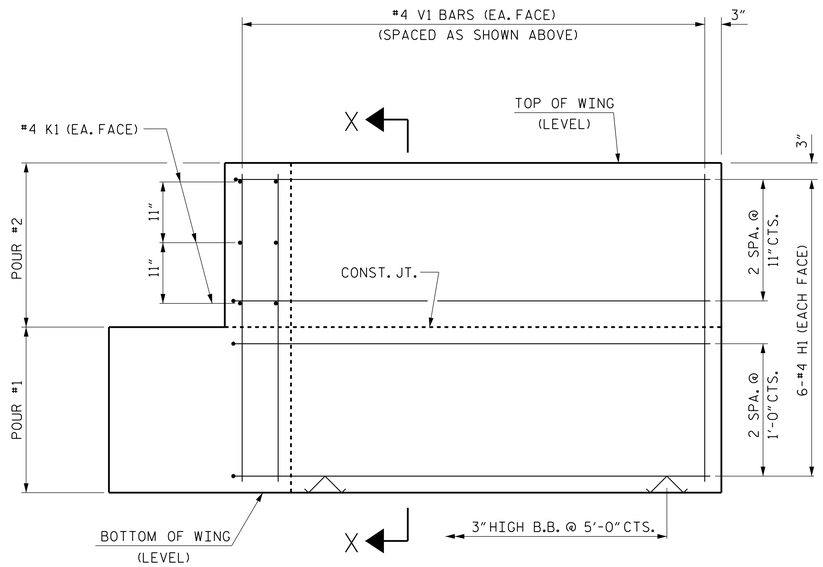


ELEVATION OF WING (W1)

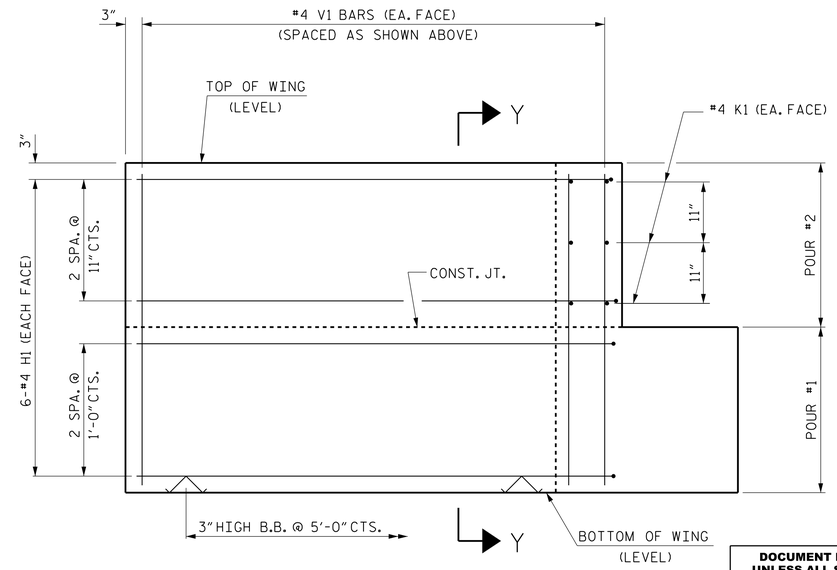


ELEVATION OF WING (W2)

WING DETAILS

PROJECT NO. B-5997

JOHNSTON COUNTY

STATION: 14+25.50 -L-

SHEET 3 OF 4

STATE OF NORTH CAROLINA
DEPARTMENT OF TRANSPORTATION
RALEIGH

SUBSTRUCTURE

END BENT
WING DETAILS

| | | | |
|---|---|---|---|
| ASSEMBLED BY : W. B. ALLEN | DATE : 6/18 | | |
| CHECKED BY : Z. H. BROWN | DATE : 6/18 | | |
| DRAWN BY : DGE 02/10 | REV. 4/15 | MAA/TMG | |
| CHECKED BY : MKT 02/10 | | | |

PLANS PREPARED BY:
CALYX ENGINEERS + CONSULTANTS
6750 TRYON ROAD
CARY, NC 27518
phone: 919.851.1912
CALYXengineers.com
NC License # F-1333

**DOCUMENT NOT CONSIDERED FINAL UNLESS ALL SIGNATURES COMPLETED**

THIS STANDARD DRAWING REVIEWED & ADOPTED FOR USE AT THE REFERENCED LOCATION BY THE UNDERSIGNED:

NORTH CAROLINA PROFESSIONAL SEAL 045785 ENGINEER ZACHARY H. BROWN
DocuSigned by: Zachary H. Brown
DS-E2EDE0D0AE785
3/8/2019

| REVISIONS | | | | | | |
|---|---|---|---|---|---|---|
| NO. | BY: | DATE: | NO. | BY: | DATE: | |
| 1 | | | 3 | | | |
| 2 | | | 4 | | | |

SHEET NO. S-10
TOTAL SHEETS 14

STD. NO. EB_33_90S

10/29/2018 11:38:58 AM R:\Structures\B5997_SMU_E3_50027f.dgn

DocuSign Envelope ID: 1576A943-B2EB-4096-AAA6-003078224 0B5

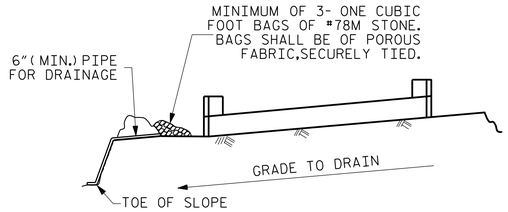


BAGGED STONE AND PIPE SHALL BE PLACED IMMEDIATELY AFTER COMPLETION OF END BENT EXCAVATION. PIPE MAY BE EITHER CONCRETE, CORRUGATED STEEL, CORRUGATED ALUMINUM ALLOY, OR CORRUGATED PLASTIC. PERFORATED PIPE WILL NOT BE ALLOWED.

BAGGED STONE SHALL REMAIN IN PLACE UNTIL THE ENGINEER DIRECTS THAT IT BE REMOVED. THE CONTRACTOR SHALL REMOVE AND DISPOSE OF SILT ACCUMULATIONS AT BAGGED STONE WHEN SO DIRECTED BY THE ENGINEER. BAGS SHALL BE REMOVED AND REPLACED WHENEVER THE ENGINEER DETERMINES THAT THEY HAVE DETERIORATED AND LOST THEIR EFFECTIVENESS.

NO SEPARATE PAYMENT WILL BE MADE FOR THIS WORK AND THE ENTIRE COST OF THIS WORK SHALL BE INCLUDED IN THE UNIT CONTRACT PRICE BID FOR THE SEVERAL PAY ITEMS.

## TEMPORARY DRAINAGE AT END BENT

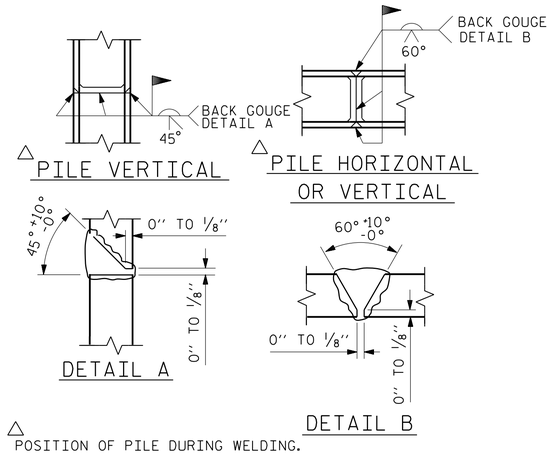


△ POSITION OF PILE DURING WELDING.

## PILE SPLICE DETAILS

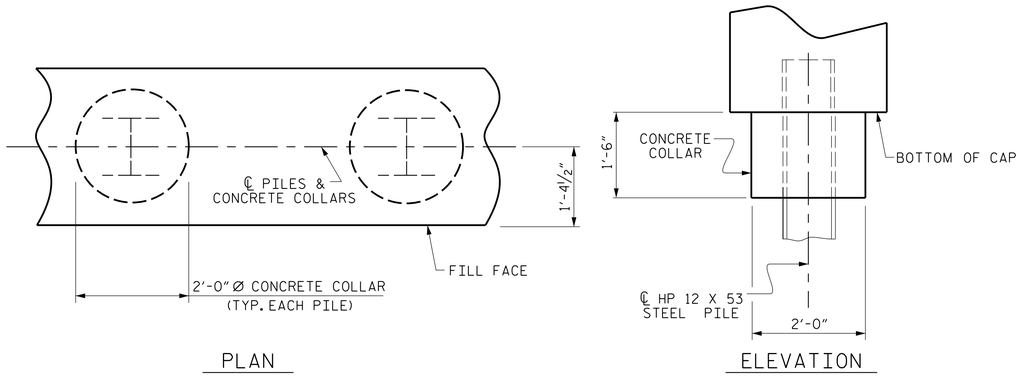


## CORROSION PROTECTION FOR STEEL PILES DETAIL

(END BENT No. 1 SHOWN, END BENT No. 2 SIMILAR BY ROTATION)

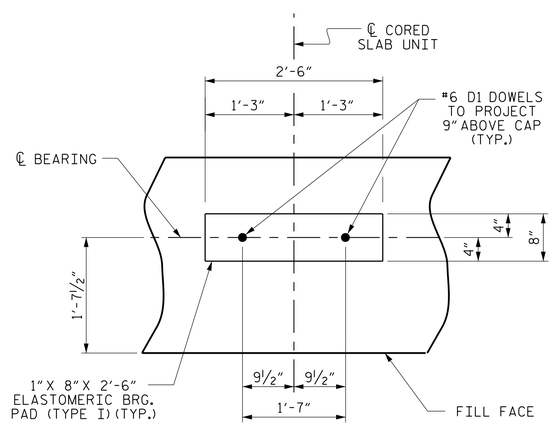


## DETAIL "A"

(END BENT No. 1 SHOWN, END BENT No. 2 SIMILAR BY ROTATION)

## BAR TYPES

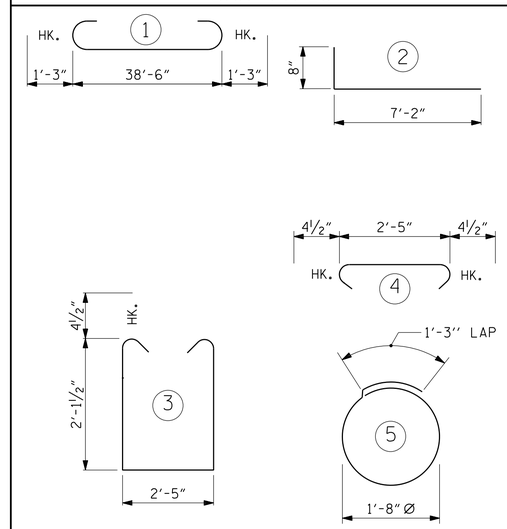


ALL BAR DIMENSIONS ARE OUT TO OUT.

| END BENT No. 1 | END BENT No. 2 |
|---|---|
| HP 12 X 53 STEEL PILES<br>NO: 7 LIN. FT.= 105 | HP 12 X 53 STEEL PILES<br>NO: 7 LIN. FT.= 140 |
| PILE DRIVING EQUIPMENT SETUP FOR HP 12 X 53 STEEL PILES<br>NO: 7 | PILE DRIVING EQUIPMENT SETUP FOR HP 12 X 53 STEEL PILES<br>NO: 7 |
| STEEL PILE POINTS NO: 7 | STEEL PILE POINTS NO: 7 |

## BILL OF MATERIAL
### FOR ONE END BENT

| BAR | NO. | SIZE | TYPE | LENGTH | WEIGHT |
|---|---|---|---|---|---|
| B1 | 8 | #9 | 1 | 41'-0" | 1115 |
| B2 | 16 | #4 | STR | 20'-7" | 220 |
| B3 | 10 | #4 | STR | 2'-5" | 16 |
| D1 | 22 | #6 | STR | 1'-6" | 50 |
| H1 | 24 | #4 | 2 | 7'-10" | 126 |
| K1 | 12 | #4 | STR | 2'-11" | 23 |
| S1 | 50 | #4 | 3 | 7'-5" | 248 |
| S2 | 50 | #4 | 4 | 3'-2" | 106 |
| S3 | 14 | #4 | 5 | 6'-6" | 61 |
| V1 | 48 | #4 | STR | 4'-8" | 150 |
| REINFORCING STEEL (FOR ONE END BENT) | | | | | 2115 LBS. |

CLASS A CONCRETE BREAKDOWN (FOR ONE END BENT)

| | | |
|---|---|---|
| POUR #1 | CAP, LOWER PART OF WINGS & COLLARS | 12.4 C.Y. |
| POUR #2 | UPPER PART OF WINGS | 1.8 C.Y. |
| TOTAL CLASS A CONCRETE | | 14.2 C.Y. |

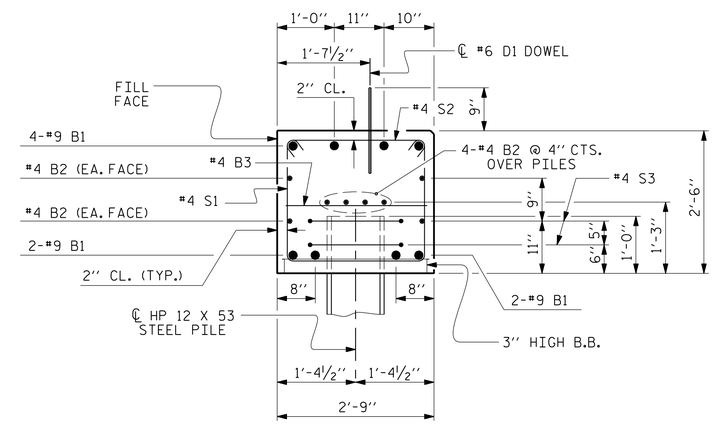


## SECTION A-A

(CONCRETE COLLAR NOT SHOWN FOR CLARITY. SEE "CORROSION PROTECTION FOR STEEL PILES DETAIL.")

PROJECT NO. B-5997

JOHNSTON COUNTY

STATION: 14+25.50 -L-

SHEET 4 OF 4

STATE OF NORTH CAROLINA
DEPARTMENT OF TRANSPORTATION
RALEIGH

SUBSTRUCTURE

# END BENT No. 1 & 2 DETAILS

**DOCUMENT NOT CONSIDERED FINAL UNLESS ALL SIGNATURES COMPLETED**

THIS STANDARD DRAWING REVIEWED & ADOPTED FOR USE AT THE REFERENCED LOCATION BY THE UNDERSIGNED:

NORTH CAROLINA PROFESSIONAL SEAL ENGINEER ZACHARY H. BROWN 047785
Docu Signed by: Zachary H. Brown
DS4EEDE0B4B7785
3/8/2019

PLANS PREPARED BY:
CALYX ENGINEERS + CONSULTANTS
6750 TRYON ROAD
CARY, NC 27518
phone: 919.851.1912
CALYXengineers.com
NC License # F-1333

| REVISIONS | | | | | | | SHEET NO. |
|---|---|---|---|---|---|---|---|
| NO. | BY: | DATE: | NO. | BY: | DATE: | | S-11 |
| 1 | | | 3 | | | | TOTAL SHEETS |
| 2 | | | 4 | | | | 14 |

| | | | |
|---|---|---|---|
| ASSEMBLED BY : W. B. ALLEN | | DATE : 6/18 | |
| CHECKED BY : Z. H. BROWN | | DATE : 6/18 | |
| DRAWN BY : DGE 12/09 | REV. 4/17 | MAA/THC | |
| CHECKED BY : MKT 01/10 | | | |

10/29/2018 11:38:59 AM R:\Structures\B5997_SMU_E4_50027.dgn

STD. NO. EB_33_90S

DocuSign Envelope ID: 1576A943-B2EB-4096-AAA6-003078224 0B5

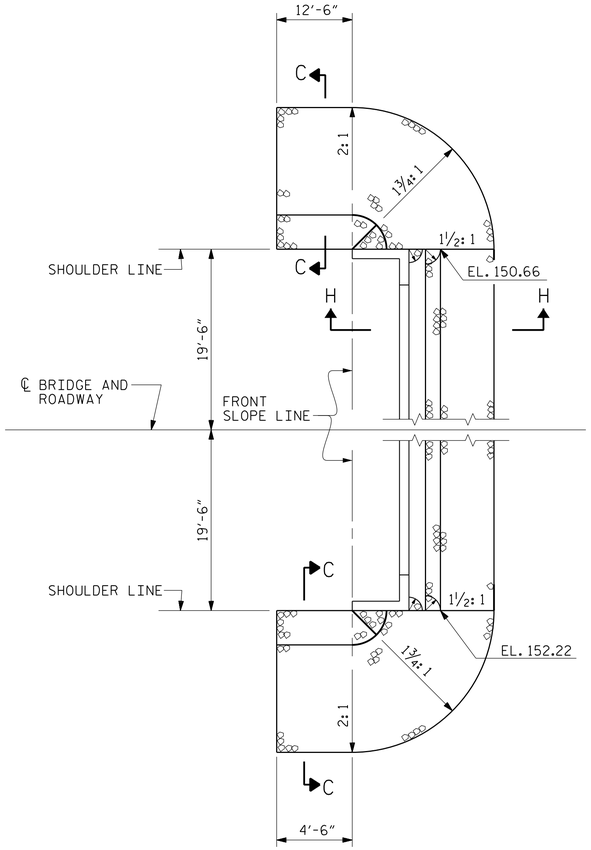


END BENT 1

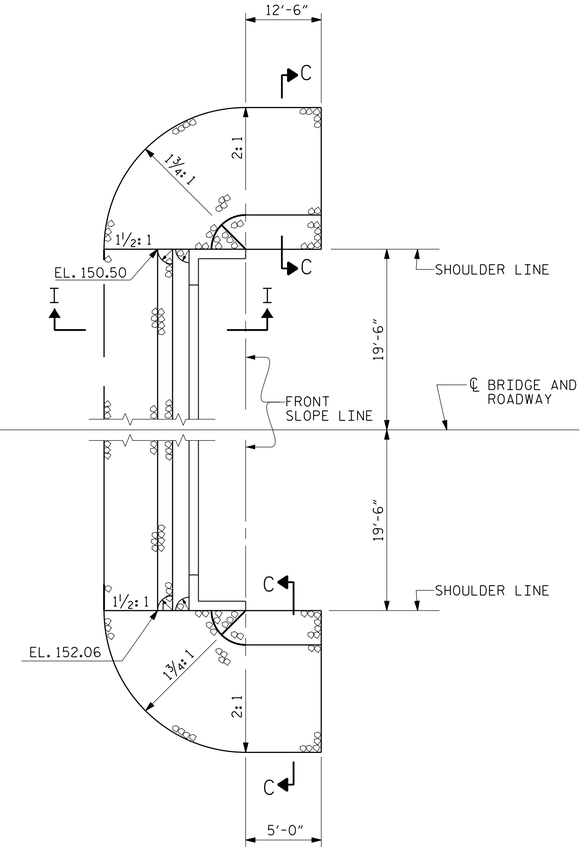


END BENT 2

SHOULDER RIP RAP IS HIGHER THAN BERM RIP RAP

## NOTES :

FOR BERM WIDTH DIMENSIONS, SEE GENERAL DRAWING.

| ESTIMATED QUANTITIES | | |
|---|---|---|
| BRIDGE @ STA. 14+25.50 -L- | RIP RAP CLASS II (2'-0" THICK) | GEOTEXTILE FOR DRAINAGE |
| | TONS | SQUARE YARDS |
| END BENT 1 | 90 | 95 |
| END BENT 2 | 85 | 75 |

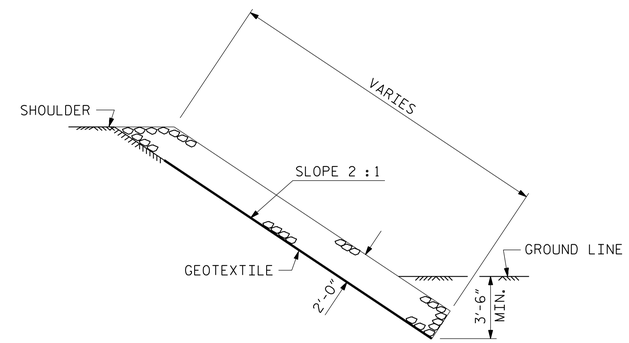


SECTION C-C

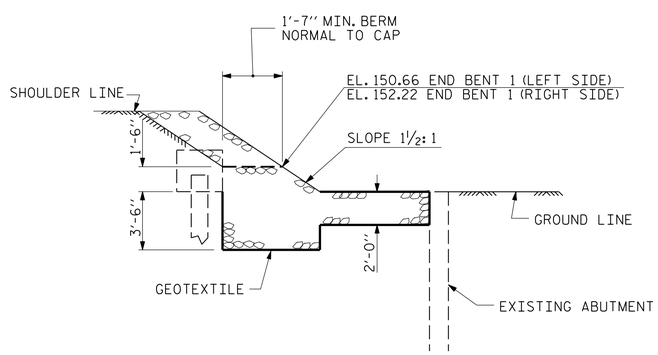


SECTION H-H

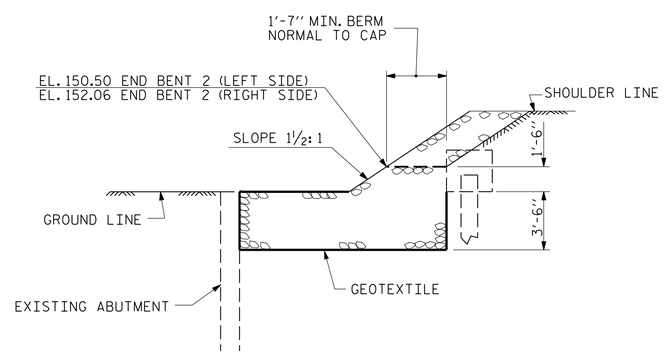


SECTION I-I

PROJECT NO. B-5997

JOHNSTON COUNTY

STATION: 14+25.50 -L-

REPLACES BRIDGE NO. 277

STATE OF NORTH CAROLINA
DEPARTMENT OF TRANSPORTATION
RALEIGH

# RIP RAP DETAILS

NORTH CAROLINA PROFESSIONAL ENGINEER SEAL 035785 ZACHARY H. BROWN

Docu Signed by: Zachary H. Brown
DS-PE-E0E0D4A6-785

3/8/2019

PLANS PREPARED BY:

CALYX ENGINEERS + CONSULTANTS
6750 TRYON ROAD
CARY, NC 27518
phone: 919.851.1912
CALYXengineers.com
NC License # F-1333

| REVISIONS | | | | | | SHEET NO. |
|---|---|---|---|---|---|---|
| NO. | BY: | DATE: | NO. | BY: | DATE: | S-12 |
| 1 | | | 3 | | | TOTAL SHEETS |
| 2 | | | 4 | | | 14 |

DOCUMENT NOT CONSIDERED FINAL UNLESS ALL SIGNATURES COMPLETED

| | | | |
|---|---|---|---|
| DRAWN BY : | W. B. ALLEN | DATE : | 6/18 |
| CHECKED BY : | Z. H. BROWN | DATE : | 6/18 |
| DESIGN ENGINEER OF RECORD: | Z. H. BROWN | DATE : | 6/18 |

10/29/2018 11:39:01 AM R:\Structures\B5997_SMU_RR_50027f.dgn

DocuSign Envelope ID: 1576A943-B2EB-4096-AAA6-003078224 0B5

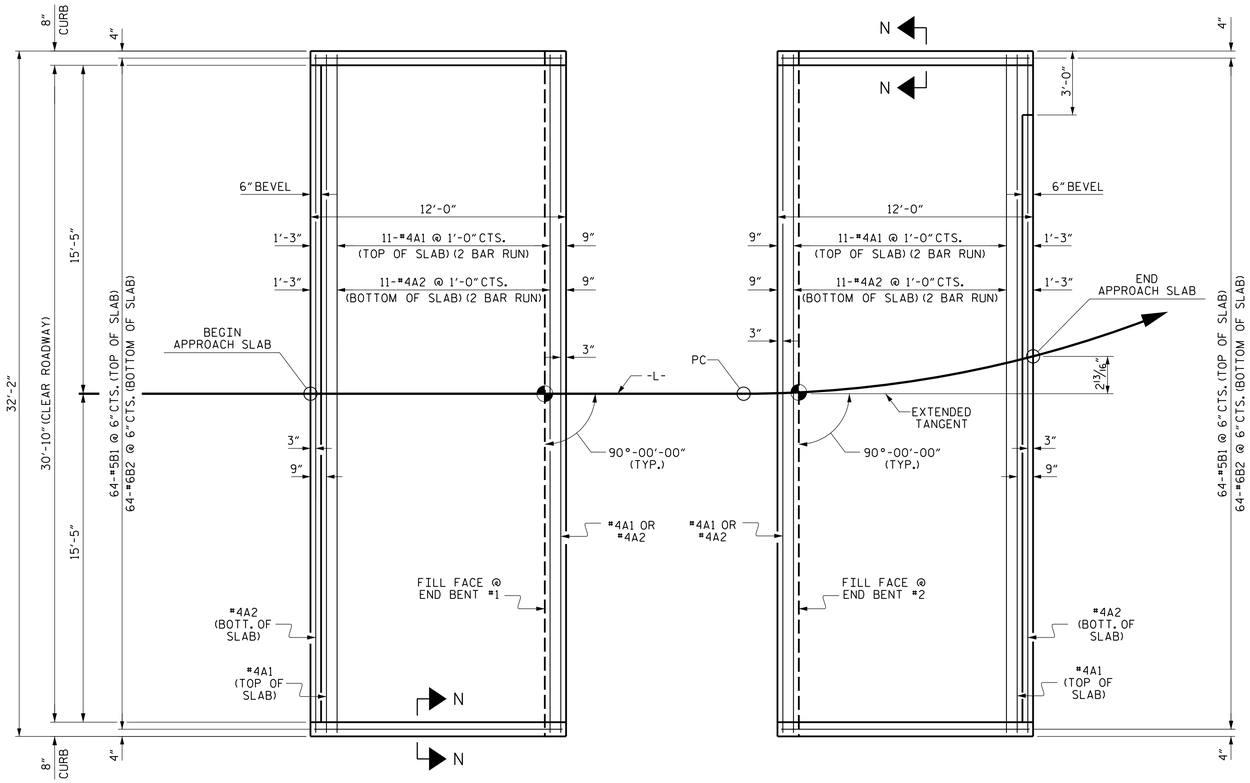


## PLAN @ END BENT #1

## PLAN @ END BENT #2

DIMENSIONS SHOWN ARE TYPICAL FOR BOTH APPROACH SLABS

## NOTES

FOR BRIDGE APPROACH FILL INCLUDING GEOTEXTILE, 4"Ø DRAINAGE PIPE, AND SELECT MATERIAL BACKFILL, SEE ROADWAY PLANS.

GEOTEXTILE SHALL BE TYPE 1 IN ACCORDANCE WITH THE STANDARD SPECIFICATIONS SECTION 1056.

SELECT MATERIAL BACKFILL (CLASS V OR CLASS VI) SHALL BE IN ACCORDANCE WITH STANDARD SPECIFICATIONS SECTION 1016.

SELECT MATERIAL BACKFILL IS TO BE CONTINUOUS ALONG FILL FACE OF BACKWALL FROM OUTSIDE EDGE TO OUTSIDE EDGE OF APPROACH SLAB.

FOR THE 4"Ø DRAINAGE PIPE OUTLET(S), SEE ROADWAY STANDARD DRAWINGS.

AREA BETWEEN THE WINGWALL AND APPROACH SLAB SHALL BE GRADED TO DRAIN THE WATER AWAY FROM THE FILL FACE OF THE BRIDGE AND SHALL BE PAVED. SEE ROADWAY PLANS.

APPROACH SLAB GROOVING IS NOT REQUIRED.

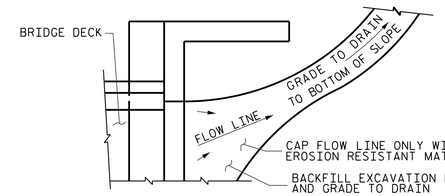


NOTE: IF THE APPROACH SLAB IS NOT CONSTRUCTED IMMEDIATELY AFTER THE BACKFILLING OF THE END BENT EXCAVATION, GRADE TO DRAIN TO THE BOTTOM OF THE SLOPE AND PROVIDE EROSION RESISTANT MATERIAL, SUCH AS FIBERGLASS ROVING OR AS DIRECTED BY THE ENGINEER TO PREVENT SOIL EROSION AND TO PROTECT THE AREA ADJACENT TO THE STRUCTURE. THE CONTRACTOR WILL BE REQUIRED TO REMOVE THESE MATERIALS PRIOR TO CONSTRUCTION OF THE APPROACH SLAB.

## TEMPORARY DRAINAGE DETAIL

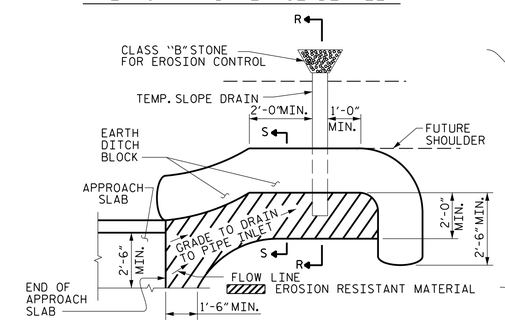


NOTE: IMMEDIATELY AFTER THE CONSTRUCTION OF THE APPROACH SLAB, THE CONTRACTOR SHALL PROVIDE TEMPORARY BERM AND SLOPE DRAIN. CONTRACTOR SHALL GRADE TO PIPE INLET AND PROVIDE EROSION RESISTANT MATERIAL AS SHOWN. THE EROSION RESISTANT MATERIAL SHALL BE EITHER 1) ASPHALT PLANT MIX, TYPE 1 OR TYPE 2, MIN. 2" DEPTH, 2) EROSION CONTROL MAT, OR 3) CONCRETE, AS DIRECTED BY THE ENGINEER. THE SLOPE DRAIN SHALL CONSIST OF A NON-PERFORATED TEMPORARY DRAINAGE PIPE, 12 INCHES IN DIAMETER.

PLAN VIEW

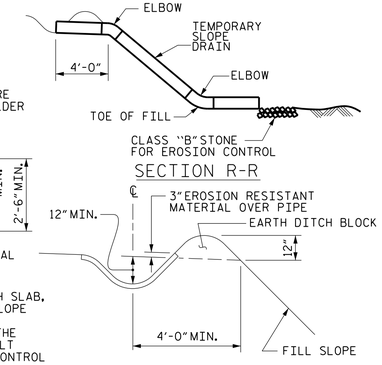


SECTION S-S

## TEMPORARY BERM AND SLOPE DRAIN DETAILS

(TO BE USED WHEN SHOULDER BERM GUTTER IS REQUIRED)

## BILL OF MATERIAL

### APPROACH SLAB AT EB #1

| BAR | NO. | SIZE | TYPE | LENGTH | WEIGHT |
|---|---|---|---|---|---|
| * A1 | 26 | #4 | STR | 16'-11" | 294 |
| A2 | 26 | #4 | STR | 16'-9" | 291 |
| * B1 | 64 | #5 | STR | 11'-2" | 745 |
| B2 | 64 | #6 | STR | 11'-8" | 1121 |
| REINFORCING STEEL | | | | LBS. | 1412 |
| * EPOXY COATED REINFORCING STEEL | | | | LBS. | 1039 |
| CLASS AA CONCRETE | | | | C. Y. | 18.4 |

### APPROACH SLAB AT EB #2

| BAR | NO. | SIZE | TYPE | LENGTH | WEIGHT |
|---|---|---|---|---|---|
| * A1 | 26 | #4 | STR | 16'-11" | 294 |
| A2 | 26 | #4 | STR | 16'-9" | 291 |
| * B1 | 64 | #5 | STR | 11'-2" | 745 |
| B2 | 64 | #6 | STR | 11'-8" | 1121 |
| REINFORCING STEEL | | | | LBS. | 1412 |
| * EPOXY COATED REINFORCING STEEL | | | | LBS. | 1039 |
| CLASS AA CONCRETE | | | | C. Y. | 18.4 |

## SPLICE LENGTHS

| BAR SIZE | EPOXY COATED | UNCOATED |
|---|---|---|
| #4 | 2'-0" | 1'-9" |
| #5 | 2'-6" | 2'-2" |
| #6 | 3'-10" | 2'-7" |

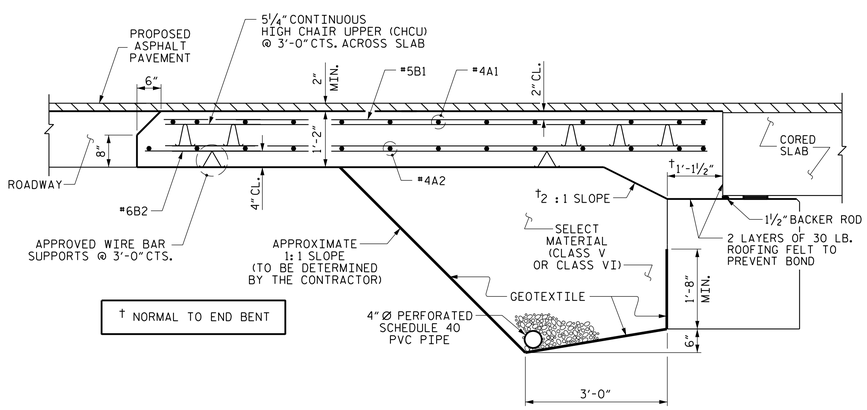


† NORMAL TO END BENT

## SECTION THRU SLAB

(TYPE II - MODIFIED APPROACH FILL)

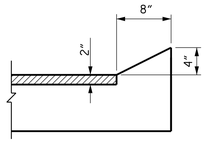


SECTION N-N

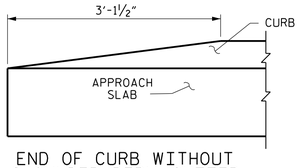


END OF CURB WITHOUT SHOULDER BERM GUTTER

## CURB DETAILS

PROJECT NO. B-5997

JOHNSTON COUNTY

STATION: 14+25.50 -L-

PLANS PREPARED BY:

CALYX ENGINEERS + CONSULTANTS

6750 TRYON ROAD
CARY, NC 27518
phone: 919.851.1912
CALYXengineers.com

NC License # F-1333

**DOCUMENT NOT CONSIDERED FINAL UNLESS ALL SIGNATURES COMPLETED**

THIS STANDARD DRAWING REVIEWED & ADOPTED FOR USE AT THE REFERENCED LOCATION BY THE UNDERSIGNED:

NORTH CAROLINA PROFESSIONAL SEAL 045785 ENGINEER ZACHARY H. BROWN

Docu Signed by: Zachary H. Brown

3/8/2019

STATE OF NORTH CAROLINA
DEPARTMENT OF TRANSPORTATION
RALEIGH

STANDARD
BRIDGE APPROACH SLAB
FOR PRESTRESSED CONCRETE
CORED SLAB UNIT
(SUB-REGIONAL TIER)
90° SKEW

| REVISIONS | | | | | | SHEET NO. |
|---|---|---|---|---|---|---|
| NO. | BY: | DATE: | NO. | BY: | DATE: | S-13 |
| 1 | | | 3 | | | TOTAL SHEETS |
| 2 | | | 4 | | | 14 |

| | | | |
|---|---|---|---|
| ASSEMBLED BY : | W. B. ALLEN | DATE : | 6/18 |
| CHECKED BY : | Z. H. BROWN | DATE : | 6/18 |
| DRAWN BY : SHS/MAA 5-09 | | | |
| CHECKED BY : BCH 5-09 | REV. 12-17 | MAA/THC | |

10/29/2018 11:39:02 AM R:\Structures\B5997_SMU_AS_50027.dgn

STD. NO. BAS_33_90S

DocuSign Envelope ID: 1576A943-B2EB-4096-AAA6-003078224 0B5

# STANDARD NOTES

## DESIGN DATA:

| | |
|---|---|
| SPECIFICATIONS | A.A.S.H.T.O. (CURRENT) |
| LIVE LOAD | SEE PLANS |
| IMPACT ALLOWANCE | SEE A.A.S.H.T.O. |
| STRESS IN EXTREME FIBER OF STRUCTURAL STEEL - AASHTO M270 GRADE 36 | 20,000 LBS. PER SQ. IN. |
| - AASHTO M270 GRADE 50W | 27,000 LBS. PER SQ. IN. |
| - AASHTO M270 GRADE 50 | 27,000 LBS. PER SQ. IN. |
| REINFORCING STEEL IN TENSION - GRADE 60 | 24,000 LBS. PER SQ. IN. |
| CONCRETE IN COMPRESSION | 1,200 LBS. PER SQ. IN. |
| CONCRETE IN SHEAR | SEE A.A.S.H.T.O. |
| STRUCTURAL TIMBER - TREATED OR UNTREATED EXTREME FIBER STRESS | 1,800 LBS. PER SQ. IN. |
| COMPRESSION PERPENDICULAR TO GRAIN OF TIMBER | 375 LBS. PER SQ. IN. |
| EQUIVALENT FLUID PRESSURE OF EARTH | 30 LBS. PER CU. FT. (MINIMUM) |

## MATERIAL AND WORKMANSHIP:

EXCEPT AS MAY OTHERWISE BE SPECIFIED ON PLANS OR IN THE SPECIAL PROVISIONS, ALL MATERIAL AND WORKMANSHIP SHALL BE IN ACCORDANCE WITH THE 2018 "STANDARD SPECIFICATIONS FOR ROADS AND STRUCTURES" OF THE N. C. DEPARTMENT OF TRANSPORTATION.

STEEL SHEET PILING FOR PERMANENT OR TEMPORARY APPLICATIONS SHALL BE HOT ROLLED.

## CONCRETE:

UNLESS OTHERWISE REQUIRED ON PLANS, CLASS A CONCRETE SHALL BE USED FOR ALL PORTIONS OF ALL STRUCTURES WITH THE EXCEPTION THAT: CLASS AA CONCRETE SHALL BE USED IN BRIDGE SUPERSTRUCTURES, ABUTMENT BACKWALLS, AND APPROACH SLABS; AND CLASS B CONCRETE SHALL BE USED FOR SLOPE PROTECTION AND RIP RAP.

## CONCRETE CHAMFERS:

UNLESS OTHERWISE NOTED ON THE PLANS, ALL EXPOSED CORNERS ON STRUCTURES SHALL BE CHAMFERED ¾" WITH THE FOLLOWING EXCEPTIONS: TOP CORNERS OF CURBS MAY BE ROUNDED TO 1½" RADIUS WHICH IS BUILT INTO CURB FORMS; CORNERS OF TRANSVERSE FLOOR EXPANSION JOINTS SHALL BE ROUNDED WITH A ¼" FINISHING TOOL UNLESS OTHERWISE REQUIRED ON PLANS; AND CORNERS OF EXPANSION JOINTS IN THE ROADWAY FACES AND TOPS OF CURBS AND SIDEWALKS SHALL BE ROUNDED TO A ¼" RADIUS WITH A FINISHING STONE OR TOOL UNLESS OTHERWISE REQUIRED ON PLANS.

## DOWELS:

DOWELS WHEN INDICATED ON PLANS AS FOR CULVERT EXTENSIONS, SHALL BE EMBEDDED AT LEAST 12" INTO THE OLD CONCRETE AND GROUTED INTO PLACE WITH 1:2 CEMENT MORTAR.

## ALLOWANCE FOR DEAD LOAD DEFLECTION, SETTLEMENT, ETC. IN CASTING SUPERSTRUCTURES:

BRIDGES SHALL BE BUILT ON THE GRADE OR VERTICAL CURVE SHOWN ON PLANS. SLABS, CURBS AND PARAPETS SHALL CONFORM TO THE GRADE OR CURVE.

ALL DIMENSIONS WHICH ARE GIVEN IN SECTION AND ARE AFFECTED BY DEAD LOAD DEFLECTIONS ARE DIMENSIONS AT CENTER LINE OF BEARING UNLESS OTHERWISE NOTED ON PLANS. IN SETTING FORMS FOR STEEL BEAM BRIDGES AND PRESTRESSED CONCRETE GIRDER BRIDGES, ADJUSTMENTS SHALL BE MADE DUE TO THE DEAD LOAD DEFLECTIONS FOR THE ELEVATIONS SHOWN. WHERE BLOCKS ARE SHOWN OVER BEAMS FOR BUILDING UP TO THE SLAB, THE VERTICAL DIMENSIONS OF THE BLOCKS SHALL BE ADJUSTED BETWEEN BEARINGS TO COMPENSATE FOR DEAD LOAD DEFLECTIONS, VERTICAL CURVE ORDINATE, AND ACTUAL BEAM CAMBER. WHERE BOTTOM OF SLAB IS IN LINE WITH BOTTOM OF TOP FLANGES, DEPTH OF SLAB BETWEEN BEARINGS SHALL BE ADJUSTED TO COMPENSATE FOR DEAD LOAD DEFLECTION, VERTICAL CURVE ORDINATE, AND ACTUAL BEAM CAMBER.

IN SETTING FALSEWORK AND FORMS FOR REINFORCED CONCRETE SPANS, AN ALLOWANCE SHALL BE MADE FOR DEAD LOAD DEFLECTIONS, SETTLEMENT OF FALSEWORK, AND PERMANENT CAMBER WHICH SHALL BE PROVIDED FOR IN ADDITION TO THE ELEVATIONS SHOWN. AFTER REMOVAL OF THE FALSEWORK, THE FINISHED STRUCTURES SHALL CONFORM TO THE PROFILE AND ELEVATIONS SHOWN ON THE PLANS AND CONSTRUCTION ELEVATIONS FURNISHED BY THE ENGINEER.

DETAILED DRAWINGS FOR FALSEWORK OR FORMS FOR BRIDGE SUPERSTRUCTURE AND ANY STRUCTURE OR PARTS OF A STRUCTURE AS NOTED ON THE PLANS SHALL BE SUBMITTED TO THE ENGINEER FOR APPROVAL BEFORE CONSTRUCTION OF THE FALSEWORK OR FORMS IS STARTED.

## REINFORCING STEEL:

ALL REINFORCING STEEL SHALL BE DEFORMED. DIMENSIONS RELATIVE TO PLACEMENT OF REINFORCING ARE TO CENTERS OF BARS UNLESS OTHERWISE INDICATED IN THE PLANS. DIMENSIONS ON BAR DETAILS ARE TO CENTERS OF BARS OR ARE OUT TO OUT AS INDICATED ON PLANS.

WIRE BAR SUPPORTS SHALL BE PROVIDED FOR REINFORCING STEEL WHERE INDICATED ON THE PLANS. WHEN BAR SUPPORT PIECES ARE PLACED IN CONTINUOUS LINES, THEY SHALL BE SO PLACED THAT THE ENDS OF THE SUPPORTING WIRES SHALL BE LAPPED TO LOCK LEGS ON ADJOINING PIECES.

## STRUCTURAL STEEL:

AT THE CONTRACTOR'S OPTION, HE MAY SUBSTITUTE ⅞" Ø SHEAR STUDS FOR THE ¾" Ø STUDS SPECIFIED ON THE PLANS. THIS SUBSTITUTION SHALL BE MADE AT THE RATE OF 3 - ⅞" Ø STUDS FOR 4 - ¾" Ø STUDS, AND STUD SPACING CHANGES SHALL BE MADE AS NECESSARY TO PROVIDE THE SAME EQUIVALENT NUMBER OF ⅞" Ø STUDS ALONG THE BEAM AS SHOWN FOR ¾" Ø STUDS BASED ON THE RATIO OF 3 - ⅞" Ø STUDS FOR 4 - ¾" Ø STUDS. STUDS OF THE LENGTH SPECIFIED ON THE PLANS MUST BE PROVIDED. THE MAXIMUM SPACING SHALL BE 2'-0".

EXCEPT AT THE INTERIOR SUPPORTS OF CONTINUOUS BEAMS WHERE THE COVER PLATE IS IN CONTACT WITH BEARING PLATE, THE CONTRACTOR MAY, AT HIS OPTION, SUBSTITUTE FOR THE COVER PLATES DESIGNATED ON THE PLANS COVER PLATES OF THE EQUIVALENT AREA PROVIDED THESE PLATES ARE AT LEAST 5/16" IN THICKNESS AND DO NOT EXCEED A WIDTH EQUAL TO THE FLANGE WIDTH LESS 2" OR A THICKNESS EQUAL TO 2 TIMES THE FLANGE THICKNESS. THE SIZE OF FILLET WELDS SHALL CONFORM TO THE REQUIREMENTS OF THE CURRENT ANSI/AASHTO/AWS "BRIDGE WELDING CODE". ELECTROSLAG WELDING WILL NOT BE PERMITTED.

WITH THE SOLE EXCEPTION OF EDGES AT SURFACES WHICH BEAR ON OTHER SURFACES, ALL SHARP EDGES AND ENDS OF SHAPES AND PLATES SHALL BE SLIGHTLY ROUNDED BY SUITABLE MEANS TO A RADIUS OF APPROXIMATELY 1/16 INCH OR EQUIVALENT FLAT SURFACE AT A SUITABLE ANGLE PRIOR TO PAINTING, GALVANIZING, OR METALLIZING.

## HANDRAILS AND POSTS:

METAL STANDARDS AND FACES OF THE CONCRETE END POSTS FOR THE METAL RAIL SHALL BE SET NORMAL TO THE GRADE OF THE CURB, UNLESS OTHERWISE SHOWN ON PLANS. THE METAL RAIL AND TOPS OF CONCRETE POSTS USED WITH THE ALUMINUM RAIL SHALL BE BUILT PARALLEL TO THE GRADE OF THE CURB.

METAL HANDRAILS SHALL BE IN ACCORDANCE WITH THE PLANS. RAILS SHALL BE AS MANUFACTURED FOR BRIDGE RAILING. CASTINGS SHALL BE OF A UNIFORM APPEARANCE. FINS AND OTHER DEFORMATIONS RESULTING FROM CASTING OR OTHERWISE SHALL BE REMOVED IN A MANNER SO THAT A UNIFORM COLORING OF THE COMPLETED CASTING SHALL BE OBTAINED. CASTINGS WITH DISCOLORATIONS OR OF NON-UNIFORM COLORING WILL NOT BE ACCEPTED. CERTIFIED MILL REPORTS ARE REQUIRED FOR METAL RAILS AND POSTS.

## SPECIAL NOTES:

GENERALLY, IN CASE OF DISCREPANCY, THIS STANDARD SHEET OF NOTES SHALL GOVERN OVER THE SPECIFICATIONS, BUT THE REMAINDER OF THE PLANS SHALL GOVERN OVER NOTES HEREON, AND SPECIAL PROVISIONS SHALL GOVERN OVER ALL. SEE SPECIFICATIONS ARTICLE 105-4.