This electronic collection of documents is provided for the convenience of the user and is Not a Certified Document –

The documents contained herein were originally issued and sealed by the individuals whose names and license numbers appear on each page, on the dates appearing with their signature on that page.
This file or an individual page shall not be considered a certified document.

DocuSign Envelope ID: B1FF3320-964B-4004-8409-FE93DA1FE4F1

09/08/99

TIP PROJECT: 17BP.4.R.85

CONTRACT: DD00250

See Sheet 1A For Index of Sheets
See Sheet 1B For Conventional Plan Sheet Symbols
See Sheet 1C-1 For Survey Control Sheets

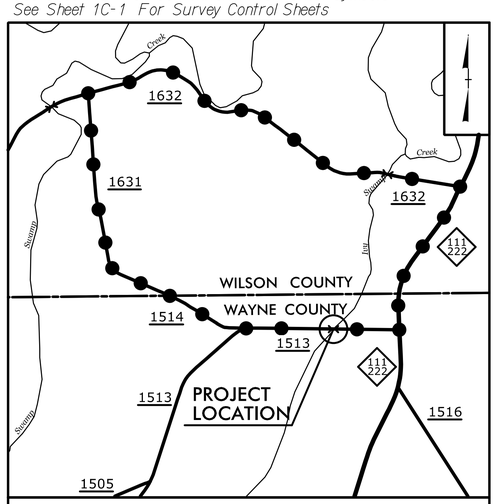

VICINITY MAP
OFFSITE DETOUR

STATE OF NORTH CAROLINA
DIVISION OF HIGHWAYS

WAYNE COUNTY

STATE	STATE PROJECT REFERENCE NO.	SHEET NO.	TOTAL SHEETS
N.C.	17BP.4.R.85	1	

STATE PROJ. NO.	F.A. PROJ. NO.	DESCRIPTION
17BP.4.R.85	N/A	PE
17BP.4.R.85	N/A	R/W, UTIL
17BP.4.R.85	N/A	CONST.

LOCATION: BRIDGE NO. 40 ON SR 1513 (RED HILL ROAD) OVER IVY SWAMP

TYPE OF WORK: GRADING, DRAINAGE, PAVING, AND STRUCTURE

NAD 83 NA 2011

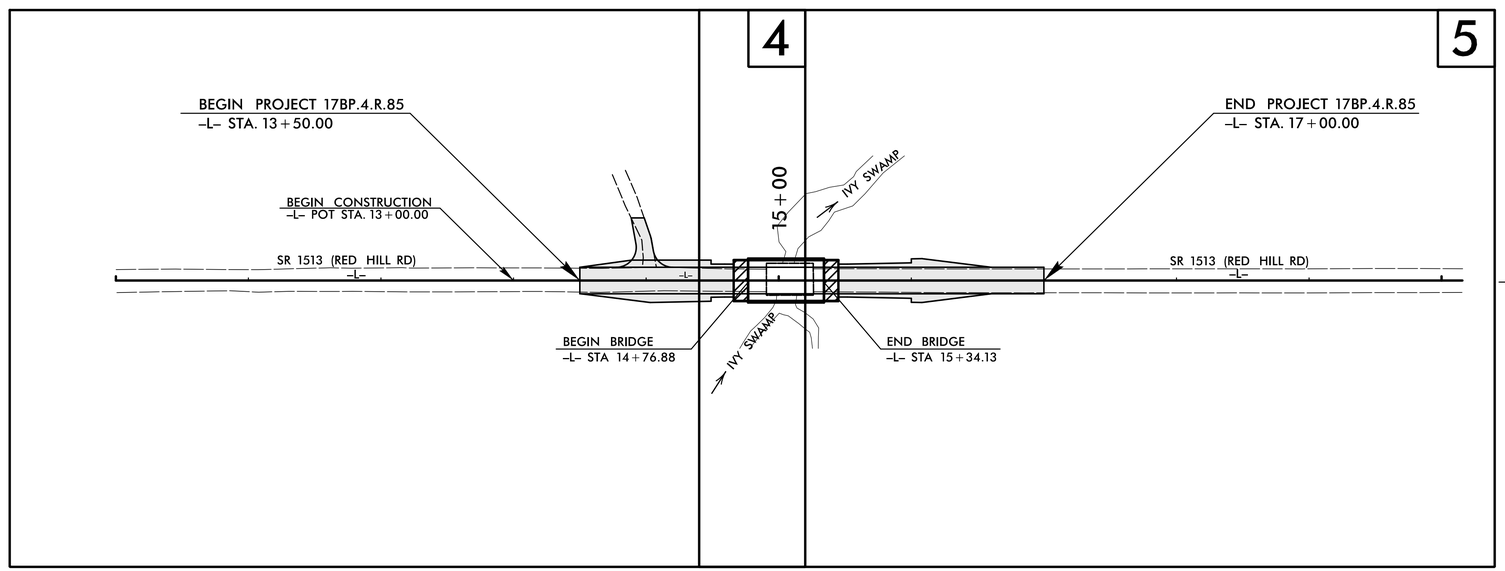

DOCUMENT NOT CONSIDERED FINAL UNLESS ALL SIGNATURES COMPLETED

GRAPHIC SCALES

20 10 0 20 40
PLANS

20 10 0 20 40
PROFILE (HORIZONTAL)

4 2 0 4 8
PROFILE (VERTICAL)

DESIGN DATA

ADT 2016 = 280
T = 6 %
V = 60 MPH

FUNC CLASS =
LOCAL-RURAL
SUBREGIONAL TIER

PROJECT LENGTH

LENGTH ROADWAY TIP PROJECT 17BP.4.R.85	=	*0.055 mile*
LENGTH STRUCTURES TIP PROJECT 17BP.4.R.85	=	*0.011 mile*
TOTAL LENGTH TIP PROJECT 17BP.4.R.85	=	*0.066 mile*

Prepared For:
DIVISION OF HIGHWAYS
1000 Birch Ridge Dr., Raleigh NC, 27610
By:
TGS ENGINEERS
706 HILLSBOROUGH ST
SUITE 200
RALEIGH, NC 27603
PH (919) 773-8887
CORP. LICENSE NO.: C-0275

2018 STANDARD SPECIFICATIONS

RIGHT OF WAY DATE:
JANUARY 30, 2018

LETTING DATE:
MAY 22, 2018

NYA K. BOAYUE, PE
PROJECT ENGINEER
PAUL SCHULKEN, EI
PROJECT DESIGN ENGINEER
RACHEL EVANS, PE
PROJECT ENGINEER
NCDOT DIVISION 4

HYDRAULICS ENGINEER
NORTH CAROLINA PROFESSIONAL SEAL 044158 ENGINEER BENJAMIN J. HENEGAR
DocuSigned by: Benjamin J. Henegar
SIGNATURE: *P.E.* 5/1/2018

ROADWAY DESIGN ENGINEER
NORTH CAROLINA PROFESSIONAL SEAL 020111 ENGINEER NYA K. BOAYUE
DocuSigned by: Nya K. Boayue
SIGNATURE: *P.E.* 5/2/2018

STATE OF NORTH CAROLINA DEPARTMENT OF TRANSPORTATION

4/30/2018
X:\NCDOT\Division 4 Wayne #40\Roadway\Proj\B950040_rdy_tsh.dgn
User:nboayue

DocuSign Envelope ID: B1FF3320-964B-4004-8409-FE93DA1FE4F1

8/17/99

PROJECT REFERENCE NO.	SHEET NO.
17BP.4.R.85	1A

ROADWAY DESIGN ENGINEER

NORTH CAROLINA PROFESSIONAL SEAL 020111 ENGINEER

DocuSigned by: 5/2/2018 | 5/2/2018

DOCUMENT NOT CONSIDERED FINAL UNLESS ALL SIGNATURES COMPLETED

TGS ENGINEERS
706 HILLSBOROUGH ST. SUITE 200
RALEIGH, NC 27603
PH (919) 773-8887
CORP. LICENSE NO.: C-0275

INDEX OF SHEETS

SHEET NUMBER	SHEET
1	TITLE SHEET
1A	INDEX OF SHEETS, GENERAL NOTES, AND STANDARD DRAWINGS
1B	CONVENTIONAL SYMBOLS
2A-1	PAVEMENT SCHEDULE AND TYPICAL SECTIONS
3B-1	ROADWAY SUMMARIES
3D-1	DRAINAGE SUMMARIES
3G-1	GEOTECHNICAL SUMMARIES
4 THRU 6	PLAN AND PROFILE SHEET
RW01 THRU RW05	RIGHT OF WAY SHEETS
TMP-1 THRU TMP-3	TRAFFIC MANAGEMENT PLANS
PMP-1	PAVEMENT MARKING PLANS
EC-1 THRU EC-7	EROSION CONTROL PLANS
RF-1	REFORESTATION PLANS
UO-1 THRU UO-3	UTILITIES BY OTHERS PLANS
X-1A	CROSS-SECTION SUMMARY SHEET
X-1 THRU X-3	CROSS-SECTIONS
S-1 THRU S-15	STRUCTURE PLANS

EFF. 01-16-2018
REV.

2018 ROADWAY ENGLISH STANDARD DRAWINGS

The following Roadway Standards as appear in "Roadway Standard Drawings" Highway Design Branch - N. C. Department of Transportation - Raleigh, N. C., Dated January, 2018 are applicable to this project and by reference hereby are considered a part of these plans:

STD.NO.	TITLE
DIVISION 2 - EARTHWORK	
200.02	Method of Clearing - Method II
225.02	Guide for Grading Subgrade - Secondary and Local
225.04	Method of Obtaining Superelevation - Two Lane Pavement
235.01	Embankment Monitoring
DIVISION 3 - PIPE CULVERTS	
300.01	Method of Pipe Installation
310.10	Driveway Pipe Construction
DIVISION 4 - MAJOR STRUCTURES	
422.02	Bridge Approach Fills - Type II Modified Approach Fill
DIVISION 5 - SUBGRADE, BASES AND SHOULDERS	
560.01	Method of Shoulder Construction - High Side of Superelevated Curve - Method I
DIVISION 6 - ASPHALT BASES AND PAVEMENTS	
654.01	Pavement Repairs
DIVISION 8 - INCIDENTALS	
815.03	Pipe Underdrain and Blind Drain
840.29	Frames and Narrow Slot Flat Grates
840.35	Traffic Bearing Grated Drop Inlet - for Cast Iron Double Frame and Grates
846.04	Drop Inlet Installation in Shoulder Berm Gutter
848.02	Driveway Turnout - Radius Type
862.01	Guardrail Placement
862.02	Guardrail Installation
862.03	Structure Anchor Units
876.02	Guide for Rip Rap at Pipe Outlets

GENERAL NOTES: 2018 SPECIFICATIONS
EFFECTIVE: 01-16-2018
REVISED:

GRADE LINE:
GRADING AND SURFACING:

THE GRADE LINES SHOWN DENOTE THE FINISHED ELEVATION OF THE PROPOSED SURFACING AT GRADE POINTS SHOWN ON THE TYPICAL SECTIONS. GRADE LINES MAY BE ADJUSTED AT THEIR BEGINNING AND ENDING AND AT STRUCTURES AS DIRECTED BY THE ENGINEER IN ORDER TO SECURE A PROPER TIE-IN.

GRADING:

THE GRADE LINES SHOWN DENOTE THE FINISHED ELEVATION OF THE PROPOSED OR FUTURE SURFACING AT GRADE POINTS SHOWN ON THE TYPICAL SECTIONS. GRADE LINES MAY BE ADJUSTED AT THEIR BEGINNING AND ENDING AND AT STRUCTURES AS DIRECTED BY THE ENGINEER IN ORDER TO SECURE A PROPER TIE-IN.

CLEARING:

CLEARING ON THIS PROJECT SHALL BE PERFORMED TO THE LIMITS ESTABLISHED BY METHOD II.

SUPERELEVATION:

ALL CURVES ON THIS PROJECT SHALL BE SUPERELEVATED IN ACCORDANCE WITH STD. NO. 225.04 USING THE RATE OF SUPERELEVATION AND RUNOFF SHOWN ON THE PLANS. SUPERELEVATION IS TO BE REVOLVED ABOUT THE GRADE POINTS SHOWN ON THE TYPICAL SECTIONS.

SHOULDER CONSTRUCTION:

ASPHALT, EARTH, AND CONCRETE SHOULDER CONSTRUCTION ON THE HIGH SIDE OF SUPERELEVATED CURVES SHALL BE IN ACCORDANCE WITH STD. NO. 560.01

SIDE ROADS:

THE CONTRACTOR WILL BE REQUIRED TO DO ALL NECESSARY WORK TO PROVIDE SUITABLE CONNECTIONS WITH ALL ROADS, STREETS, AND DRIVES ENTERING THIS PROJECT. THIS WORK WILL BE PAID FOR AT THE CONTRACT UNIT PRICE FOR THE PARTICULAR ITEMS INVOLVED.

GENERAL NOTES Cont'd: 2018 SPECIFICATIONS
EFFECTIVE: 01-16-2018
REVISED:

SUBSURFACE DRAINS:

SUBSURFACE DRAINS SHALL BE CONSTRUCTED IN ACCORDANCE WITH STD. NO. 815.02 AT LOCATIONS DIRECTED BY THE ENGINEER.

UNDERDRAINS:

UNDERDRAINS SHALL BE CONSTRUCTED IN ACCORDANCE WITH STD. NO. 815.03 AT LOCATIONS DIRECTED BY THE ENGINEER.

DRIVEWAYS:

DRIVEWAYS SHALL BE CONSTRUCTED IN ACCORDANCE WITH STD. 848.02 USING 3 FOOT RADII OR RADII AS SHOWN ON THE PLANS. LOCATIONS OF DRIVES WILL BE AS SHOWN ON THE PLANS OR AS DIRECTED BY THE ENGINEER.

GUARDRAIL:

THE GUARDRAIL LOCATIONS SHOWN ON THE PLANS MAY BE ADJUSTED DURING CONSTRUCTION AS DIRECTED BY THE ENGINEER. THE CONTRACTOR SHOULD CONSULT WITH THE ENGINEER PRIOR TO ORDERING GUARDRAIL MATERIAL.

TEMPORARY SHORING:

SHORING REQUIRED FOR THE MAINTENANCE OF TRAFFIC WILL BE PAID FOR AS "EXTRA WORK" IN ACCORDANCE WITH SECTION 104-7.

SUBSURFACE PLANS:

NO SUBSURFACE PLANS ARE AVAILABLE ON THIS PROJECT. THE CONTRACTOR SHOULD MAKE HIS OWN INVESTIGATION AS TO THE SUBSURFACE CONDITIONS.

END BENTS:

THE ENGINEER SHALL CHECK THE STRUCTURE END BENT PLANS, DETAILS, AND CROSS-SECTION PRIOR TO SETTING OF THE SLOPE STAKES FOR THE EMBANKMENT OR EXCAVATION APPROACHING A BRIDGE.

UTILITIES:

UTILITY OWNERS ON THIS PROJECT ARE

CENTURYLINK

STANTONSBURG POWER

WAYNE COUNTY WATER

ANY RELOCATION OF EXISTING UTILITIES WILL BE ACCOMPLISHED BY OTHERS.

RIGHT-OF-WAY MARKERS:

ALL RIGHT-OF-WAY MARKERS ON THIS PROJECT SHALL BE PLACED BY OTHERS.

5/1/2018
X:\NCDOT\Division 4 Wayne #40\Roadway\Proj\B950040_rdy_psh_1A.dgn
jsericksonue

12/05/11

PROJECT REFERENCE NO.	SHEET NO.
17BP.4.R.85	1B

Note: Not to Scale

****S.U.E. = Subsurface Utility Engineering***

STATE OF NORTH CAROLINA
DIVISION OF HIGHWAYS

CONVENTIONAL PLAN SHEET SYMBOLS

BOUNDARIES AND PROPERTY:

- State Line
- County Line
- Township Line
- City Line
- Reservation Line
- Property Line
- Existing Iron Pin — EIP
- Property Corner
- Property Monument — ECM
- Parcel/Sequence Number — 123
- Existing Fence Line
- Proposed Woven Wire Fence
- Proposed Chain Link Fence
- Proposed Barbed Wire Fence
- Existing Wetland Boundary — WLB
- Proposed Wetland Boundary — WLB
- Existing Endangered Animal Boundary — EAB
- Existing Endangered Plant Boundary — EPB
- Known Soil Contamination: Area or Site
- Potential Soil Contamination: Area or Site

BUILDINGS AND OTHER CULTURE:

- Gas Pump Vent or U/G Tank Cap
- Sign — S
- Well — W
- Small Mine
- Foundation
- Area Outline
- Cemetery
- Building
- School
- Church
- Dam

HYDROLOGY:

- Stream or Body of Water
- Hydro, Pool or Reservoir
- Jurisdictional Stream — JS
- Buffer Zone 1 — BZ 1
- Buffer Zone 2 — BZ 2
- Flow Arrow
- Disappearing Stream
- Spring
- Wetland
- Proposed Lateral, Tail, Head Ditch — FLOW
- False Sump

RAILROADS:

- Standard Gauge — CSX TRANSPORTATION
- RR Signal Milepost — MILEPOST 35
- Switch — SWITCH
- RR Abandoned
- RR Dismantled

RIGHT OF WAY:

- Baseline Control Point
- Existing Right of Way Marker
- Existing Right of Way Line
- Proposed Right of Way Line — RW
- Proposed Right of Way Line with Iron Pin and Cap Marker — RW
- Proposed Right of Way Line with Concrete or Granite R/W Marker — RW
- Proposed Control of Access Line with Concrete C/A Marker — CA
- Existing Control of Access — CA
- Proposed Control of Access — CA
- Existing Easement Line — E
- Proposed Temporary Construction Easement — E
- Proposed Temporary Drainage Easement — TDE
- Proposed Permanent Drainage Easement — PDE
- Proposed Permanent Drainage / Utility Easement — DUE
- Proposed Permanent Utility Easement — PUE
- Proposed Temporary Utility Easement — TUE
- Proposed Aerial Utility Easement — AUE
- Proposed Permanent Easement with Iron Pin and Cap Marker

ROADS AND RELATED FEATURES:

- Existing Edge of Pavement
- Existing Curb
- Proposed Slope Stakes Cut — C
- Proposed Slope Stakes Fill — F
- Proposed Curb Ramp — CR
- Existing Metal Guardrail
- Proposed Guardrail
- Existing Cable Guiderail
- Proposed Cable Guiderail
- Equality Symbol
- Pavement Removal

VEGETATION:

- Single Tree
- Single Shrub
- Hedge
- Woods Line
- Orchard
- Vineyard — Vineyard

EXISTING STRUCTURES:

MAJOR:

- Bridge, Tunnel or Box Culvert — CONC
- Bridge Wing Wall, Head Wall and End Wall — CONC WW

MINOR:

- Head and End Wall — CONC HW
- Pipe Culvert
- Footbridge
- Drainage Box: Catch Basin, DI or JB — CB
- Paved Ditch Gutter
- Storm Sewer Manhole — S
- Storm Sewer — S

UTILITIES:

POWER:

- Existing Power Pole
- Proposed Power Pole
- Existing Joint Use Pole
- Proposed Joint Use Pole
- Power Manhole — P
- Power Line Tower
- Power Transformer
- U/G Power Cable Hand Hole
- H-Frame Pole
- Recorded U/G Power Line — P
- Designated U/G Power Line (S.U.E.*) — P

TELEPHONE:

- Existing Telephone Pole
- Proposed Telephone Pole
- Telephone Manhole — T
- Telephone Booth
- Telephone Pedestal — T
- Telephone Cell Tower
- U/G Telephone Cable Hand Hole — HH
- Recorded U/G Telephone Cable — T
- Designated U/G Telephone Cable (S.U.E.*) — T
- Recorded U/G Telephone Conduit — TC
- Designated U/G Telephone Conduit (S.U.E.*) — TC
- Recorded U/G Fiber Optics Cable — T FO
- Designated U/G Fiber Optics Cable (S.U.E.*) — T FO

WATER:

- Water Manhole — W
- Water Meter
- Water Valve
- Water Hydrant
- Recorded U/G Water Line
- Designated U/G Water Line (S.U.E.*)
- Above Ground Water Line — A/G Water

TV:

- TV Satellite Dish
- TV Pedestal — C
- TV Tower
- U/G TV Cable Hand Hole — HH
- Recorded U/G TV Cable — TV
- Designated U/G TV Cable (S.U.E.*) — TV
- Recorded U/G Fiber Optic Cable — TV FO
- Designated U/G Fiber Optic Cable (S.U.E.*) — TV FO

GAS:

- Gas Valve
- Gas Meter
- Recorded U/G Gas Line — G
- Designated U/G Gas Line (S.U.E.*) — G
- Above Ground Gas Line — A/G Gas

SANITARY SEWER:

- Sanitary Sewer Manhole
- Sanitary Sewer Cleanout
- U/G Sanitary Sewer Line — SS
- Above Ground Sanitary Sewer — A/G Sanitary Sewer
- Recorded SS Forced Main Line — FSS
- Designated SS Forced Main Line (S.U.E.*) — FSS

MISCELLANEOUS:

- Utility Pole
- Utility Pole with Base
- Utility Located Object
- Utility Traffic Signal Box — S
- Utility Unknown U/G Line — ?UTL
- U/G Tank; Water, Gas, Oil
- Underground Storage Tank, Approx. Loc. — UST
- A/G Tank; Water, Gas, Oil
- Geoenvironmental Boring
- U/G Test Hole (S.U.E.*)
- Abandoned According to Utility Records — AATUR
- End of Information — E.O.I.

DocuSign Envelope ID: B1FF3320-964B-4004-8409-FE93DA1FE4F1

PROJECT REFERENCE NO.	SHEET NO.
17BP.4.R.85	2A-1

ROADWAY DESIGN ENGINEER — NORTH CAROLINA PROFESSIONAL SEAL 020111 ENGINEER — Mark A. Boaque — 5/2/2018

PAVEMENT DESIGN ENGINEER — NORTH CAROLINA PROFESSIONAL SEAL 32142 ENGINEER — Corey Brewer — 5/3/2018

DOCUMENT NOT CONSIDERED FINAL UNLESS ALL SIGNATURES COMPLETED

TGS ENGINEERS
706 HILLSBOROUGH ST. SUITE 200
RALEIGH, NC 27603
PH (919) 773-8887
CORP. LICENSE NO.: C-0275

PAVEMENT SCHEDULE	
C1	PROP. APPROX. 1.5″ ASPHALT CONCRETE SURFACE COURSE, TYPE S9.5B, AT AN AVERAGE RATE OF 168 LBS. PER SQ. YD.
C2	PROP. APPROX. 3″ ASPHALT CONCRETE SURFACE COURSE, TYPE S9.5B, AT AN AVERAGE RATE OF 168 LBS. PER SQ. YD. IN EACH OF TWO LAYERS.
C3	PROP. VAR. DEPTH ASPHALT CONCRETE SURFACE COURSE, TYPE S9.5B, AT AN AVERAGE RATE OF 112 LBS. PER SQ. YD. PER 1″ DEPTH. TO BE PLACED IN LAYERS NOT TO EXCEED 2″ IN DEPTH.
E1	PROP. APPROX. 4″ ASPHALT CONCRETE BASE COURSE, TYPE B25.0C, AT AN AVERAGE RATE OF 456 LBS. PER SQ. YD.
E2	PROP. VAR. DEPTH ASPHALT CONCRETE BASE COURSE, TYPE B25.0C, AT AN AVERAGE RATE OF 114 LBS. PER SQ. YD. PER 1″ DEPTH. TO BE PLACED IN LAYERS NOT LESS THAN 3″ IN DEPTH OR GREATER THAN 5½″ IN DEPTH.
R1	SHOULDER BERM GUTTER
T	EARTH MATERIAL
U	EXISTING PAVEMENT
V	MILLING EXISTING PAVEMENT (SEE MILLING DETAILS THIS SHEET)
W	VARIABLE DEPTH ASPHALT PAVEMENT (SEE WEDGING DETAILS THIS SHEET)

NOTE: PAVEMENT EDGE SLOPES ARE 1:1 UNLESS SHOWN OTHERWISE.

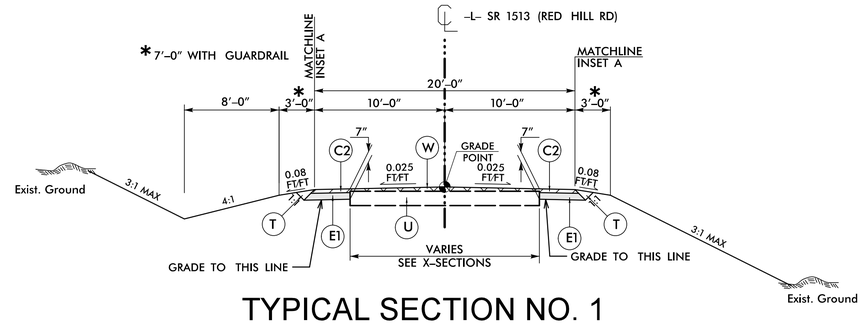

TYPICAL SECTION NO. 1

USE TYPICAL SECTION NO. 1

-L- STA. 13+50.00 TO -L- STA. 14+30.00
-L- STA. 15+85.00 TO-L- STA. 17+00.00

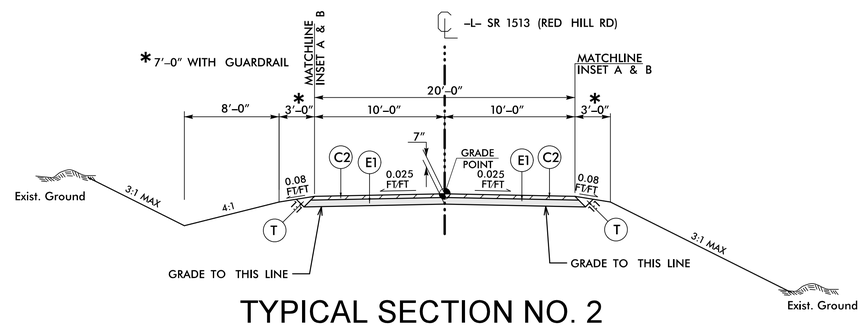

TYPICAL SECTION NO. 2

USE TYPICAL SECTION NO. 2

-L- STA. 14+30.00 TO -L- STA. 14+76.88 (BEGIN BRIDGE)
-L- STA. 15+34.13 (END BRIDGE) TO-L- STA. 15+85.00

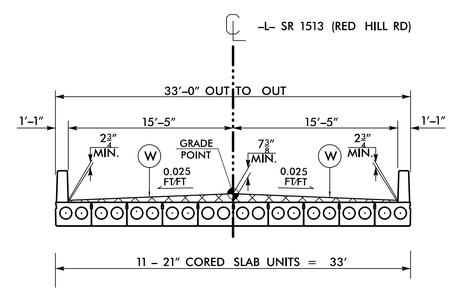

TYPICAL SECTION NO. 3

USE TYPICAL SECTION NO. 3

-L- STA. 14+76.88 TO -L- STA. 15+34.13

FULL DEPTH PAVED SHOULDER

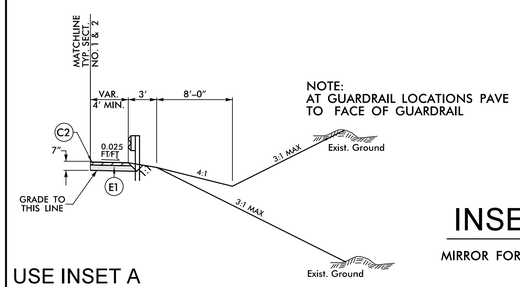

NOTE:
AT GUARDRAIL LOCATIONS PAVE TO FACE OF GUARDRAIL

INSET A

MIRROR FOR LEFT SIDE

USE INSET A

-L- STA. 13+50.00 TO -L- STA. 14+49.00 LT (BEGIN SHOULDER BERM GUTTER)
-L- STA. 16+00.00 (END SHOULDER BERM GUTTER) TO -L- STA. 16+60.33 LT

-L- STA. 13+50.67 TO -L- STA. 14+49.00 RT (BEGIN SHOULDER BERM GUTTER)
-L- STA. 16+00.00 (END SHOULDER BERM GUTTER) TO -L- STA. 16+60.33 RT

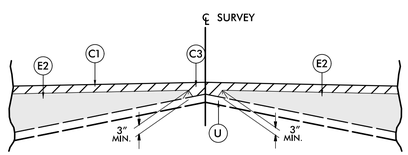

Detail Showing Method of Wedging

MILLING DETAIL

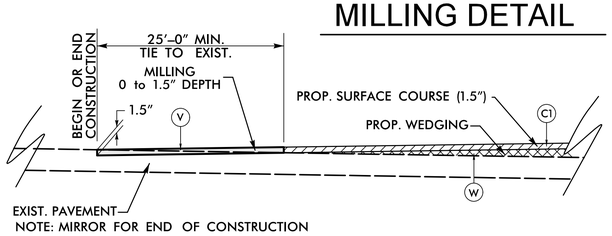

NOTE: MIRROR FOR END OF CONSTRUCTION

USE MILLING DETAIL AS FOLLOWS:

MILLING AND RESURFACING AT TIE-INS:
-L- STA. 13+50.00 TO -L- STA. 13+75.00
-L- STA. 16+75.00 TO -L- STA. 17+00.00

NOTE:
PERFORM ADDITIONAL MILLING OPERATIONS AS NEEDED FROM STA. 13+75.00 TO 14+30.00. SEE PROFILE SHEET 6.

SHOULDER BERM GUTTER

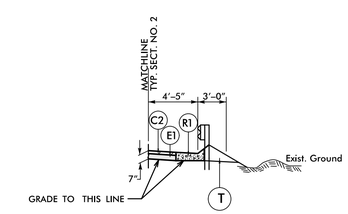

INSET B

MIRROR FOR LEFT SIDE

USE INSET B

-L- STA. 14+49.00 TO -L- STA. 14+66.00 (BEGIN APPROACH SLAB) (LT/RT)
-L- STA. 15+45.00 (END APPROACH SLAB) TO -L- STA. 16+00.00 (LT/RT)

4/30/2018
X:\Divison 4 Wayne \40\Roadway\Proj\B9500040_rdy_typ.dgn
jlsmithbowie

COMPUTED BY: PAS PAS DATE: 21 NOV 2017
CHECKED BY: NKB DATE: 3 MAR 2018

STATE OF NORTH CAROLINA
DIVISION OF HIGHWAYS

PROJECT REFERENCE NO.	SHEET NO.
17BP.4.R.85	3B-1

TGS ENGINEERS
706 HILLSBOROUGH ST. SUITE 200
RALEIGH, NC 27603
PH (919) 773-8887
CORP. LICENSE NO.: C-0275

SUMMARY OF EARTHWORK
IN CUBIC YARDS

LOCATION	UNCLASSIFIED EXCAVATION	UNDERCUT	EMBT+25%	BORROW	WASTE
–L– 13+00.00 TO 14+76.88 (BEGIN BRIDGE)	55		16		39
–L– 15+34.13 (END BRIDGE) TO 17+00.00	18		13		6
SUBTOTAL	73		29		44
MATERIAL FOR SHOULDER CONSTRUCTION			31	*31	
PROJECT TOTAL	73		60	31	44
EST. 5% TO REPLACE TOP SOIL ON BORROW PIT				2	
GRAND TOTAL	73		60	33	44
SAY	80			40	

Earthwork quantities are calculated by the Roadway Design Unit. These earthwork quantities are based in part on subsurface data provided by the Geotechnical Engineering Unit.

Approximate quantities only. Clearing and Grubbing, Unclassified Excavation, Borrow Excavation, Fine Grading, and Removal of Existing Asphalt Pavement will be paid for at the contract lump sum price for "Grading".

* UNCLASSIFIED EXCAVATION INCLUDES 52 CY OF PAVEMENT REMOVAL UNSUITABLE FOR SHOULDER CONSTRUCTION

PER "GEOTECHNICAL REPORT - DESIGN AND CONSTRUCTION RECOMMENDATIONS"
DATED FEBRUARY 19, 2018.

ESTIMATED UNDERCUT	= 300 CY	(CONTINGENCY, AS DIRECTED BY THE ENGINEER)
SELECT GRANULAR MATERIAL	= 450 CY	(CONTINGENCY, TO BE USED AS UNDERCUT AREAS BACKFILL)
DDE	= 30 CY	

PAVEMENT REMOVAL SUMMARY
IN SQUARE YARDS

SURVEY LINE	STATION	STATION	LOCATION LT/RT/CL	SY
–L–	14+30	14+91	CL	136.69
–L–	15+26	15+85	CL	129.47
			TOTAL:	266.16
			SAY:	270

SHOULDER BERM GUTTER SUMMARY

SURVEY LINE	STATION	STATION	LOCATION	LENGTH (LF)
–L–	14+49.00	14+66.00	LT	17.00′
–L–	15+45.00	16+00.00	LT	55.00′
–L–	14+49.00	14+66.00	RT	17.00′
–L–	15+45.00	16+00.00	RT	55.00′
			TOTAL:	144
			SAY:	144

"N" = DISTANCE FROM EDGE OF LANE TO FACE OF GUARDRAIL.
TOTAL SHOULDER WIDTH = DISTANCE FROM EDGE OF TRAVEL LANE TO SHOULDER BREAK POINT.
FLARE LENGTH = DISTANCE FROM LAST SECTION OF PARALLEL GUARDRAIL TO END OF GUARDRAIL.
W = TOTAL WIDTH OF FLARE FROM BEGINNING OF TAPER TO END OF GUARDRAIL.
G = GATING IMPACT ATTENUATOR TYPE 350
NG = NON–GATING IMPACT ATTENUATOR TYPE 350

GUARDRAIL SUMMARY

SURVEY LINE	BEG. STA.	END STA.	LOCATION	LENGTH			WARRANT POINT		"N" DIST. FROM E.O.L.	TOTAL SHOUL. WIDTH	FLARE LENGTH		W		ANCHORS								IMPACT ATTENUATOR TYPE 350			SINGLE FACED GUARDRAIL	REMOVE EXISTING GUARDRAIL	REMOVE AND STOCKPILE EXISTING GUARDRAIL	REMARKS
				STRAIGHT	SHOP CURVED	DOUBLE FACED	APPROACH END	TRAILING END			APPROACH END	TRAILING END	APPROACH END	TRAILING END	TYPE GREU, TL–3	CAT–1	AT–1	TYPE III	B–77				EA	G	NG				
–L–	14+08.79	14+83.00	LT	50.00′	27.80′			14+08.79	5.42′	6.42′		50′		1′			1	1											
–L–	15+33.00	16+07.99	LT	75.00′			16+07.99		5.42′	6.42′	50′		1′		1			1											
–L–	14+03.00	14+83.00	RT	75.00′			14+03.00		5.42′	6.42′	50′		1′		1			1											
–L–	15+33.00	16+07.99	RT	75.00′				16+07.99	5.42′	6.42′		50′		1′	1			1											
		SUBTOTAL (LF)		275.00′	27.80′							TOTAL ANCHORS OR ATTENUATORS (EA)			3		1	4											
		LESS ANCHORS (LF)		231.25′																									
		TOTAL GUARDRAIL (LF)		43.75′	27.80′							ANCHOR UNIT LENGTH (LF)			50.00′	6.25′	6.25′	18.75′	18.75′										
		SAY GUARDRAIL (LF)		50.00′	37.50′		ADDITIONAL GUARDRAIL POSTS: SAY 5 EA					DEDUCTION PER TYPE (LF)			150.00′		6.25′	75′											
												TOTAL DEDUCTION (LF)			231.25′														

12/06/07
4/30/2018
X:\Wayne Division 4 Wayne #40\Roadway\Proj\B950040_rdy_psh_3b-1.dgn
jlsrichburg

COMPUTED BY: Briana Camp, EI DATE: 1/11/2018

CHECKED BY: Ben Henegar, PE DATE: 1/11/2018

NORTH CAROLINA DEPARTMENT OF TRANSPORTATION
DIVISION OF HIGHWAYS

Wayne County
Bridge #950040

PROJECT NO.	SHEET NO.
17BP.4.R.85	3D-1

Note: Invert Elevations indicated are for Bid Purposes only and shall not be used for project construction stakeout.
See "Standard Specifications For Roads and Structures, Section 300-5".

LIST OF PIPES, ENDWALLS, ETC. (FOR PIPES 48 INCHES & UNDER)

| STATION | LOCATION (LT, RT, OR CL)* | STRUCTURE NO. FROM | STRUCTURE NO. TO | TOP ELEVATION | INVERT ELEVATION | INVERT ELEVATION | SLOPE CRITICAL | DRAINAGE PIPE (RCP, CSP, CAAP, HDPE, or PVC) SIZE 12" | 15" | 18" | 24" | 30" | 36" | 42" | 48" | DO NOT USE RCP | DO NOT USE CSP | DO NOT USE CAAP | DO NOT USE HDPE | C.S. PIPE SIZE 12" | 15" | 18" | 24" | 30" | 36" | 42" | 48" | R.C. PIPE CLASS III SIZE 12" | 15" | 18" | 24" | 30" | 36" | 42" | 48" | R.C. PIPE CLASS IV SIZE 12" | 15" | 18" | 24" | 30" | 36" | 42" | 48" | ** " R.C. PIPE (CLASS V) | *** RC PIPE CULVERTS, CONTRACTOR DESIGN | **** RC PIPE CULVERTS, CONTRACTOR DESIGN | 15" SIDE DRAIN PIPE | 18" SIDE DRAIN PIPE | ENDWALLS STD. 838.01 838.11 OR STD. 838.80 (UNLESS NOTED OTHERWISE) CU. YARDS | QUANTITIES FOR DRAINAGE STRUCTURES PER EACH (0' THRU 5.0') | LIN. FT. A 5.0' THRU 10.0' | LIN. FT. B 10.0' AND ABOVE | *TOTAL L.F. FOR PAY QUANTITY SHALL BE COL. 'A' + (1.3 X COL. 'B') | C.B. STD. 840.01 OR STD. 840.02 | TYPE OF GRATE E | F | G | CONCRETE TRANSITIONAL SECTION DROP INLET | CATCH BASIN | T.B.D.I STD. 840.35 | FRAME AND NARROW FLAT GRATE STD. 840.29 | 15" DRAINAGE PIPE ELBOW | | | CONC. & BRICK PIPE PLUG, C.Y. STD. 840.71 | CONC. COLLARS CL. "B" C.Y. STD. 840.72 | PIPE REMOVAL LIN. FT. | REMARKS |
|---|---|---

COMPUTED BY: Tyler C. Bottoms DATE: 2/14/18
CHECKED BY: _____ DATE: _____

(1-16-18)

PROJECT NO.	SHEET NO.
17BP.4.R.85	3G-1

STATE OF NORTH CAROLINA
DIVISION OF HIGHWAYS

SUMMARY OF SUBSURFACE DRAINAGE

LINE	Station	Station	Location LT/RT/CL	Drain Type* UD/BD/SD	LF
CONTINGENCY				SD	200
				TOTAL LF:	200

***UD = Underdrain**
***BD = Blind Drain**
***SD = Subsurface Drain**

DocuSign Envelope ID: B1FF3320-964B-4004-8409-FE93DA1FE4F1

PROJECT REFERENCE NO.	SHEET NO.
17BP.4.R.85	04
R/W SHEET NO.	

ROADWAY DESIGN ENGINEER
NORTH CAROLINA PROFESSIONAL SEAL 020111 ENGINEER
DocuSigned by: 5/2/2018

HYDRAULICS ENGINEER
NORTH CAROLINA PROFESSIONAL SEAL 044158 ENGINEER
DocuSigned by: 5/1/2018

DOCUMENT NOT CONSIDERED FINAL UNLESS ALL SIGNATURES COMPLETED

TGS ENGINEERS
706 HILLSBOROUGH ST. SUITE 200
RALEIGH, NC 27603
PH (919) 773-8887
CORP. LICENSE NO.: C-0275

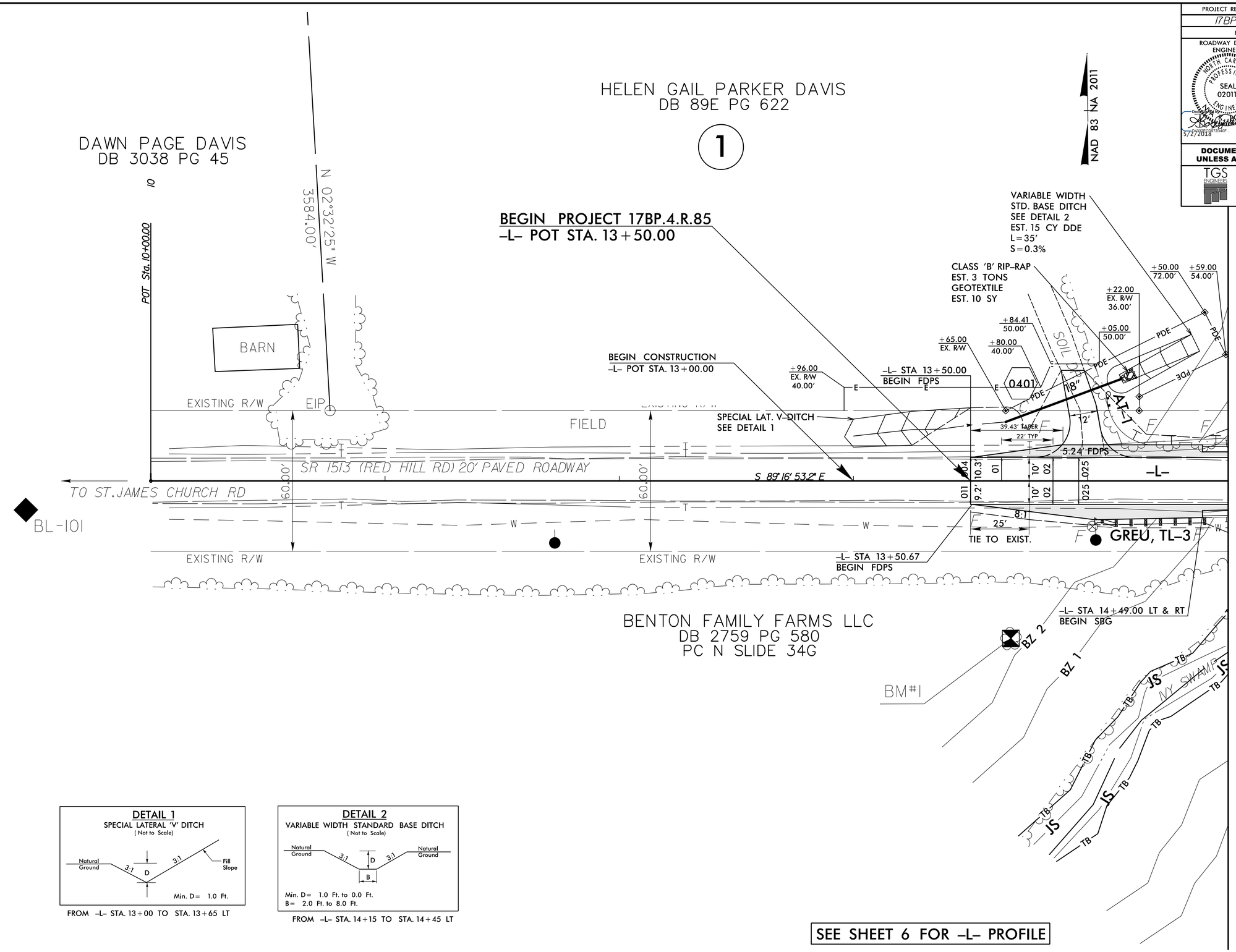

DETAIL 1
SPECIAL LATERAL 'V' DITCH
(Not to Scale)

FROM -L- STA. 13+00 TO STA. 13+65 LT

DETAIL 2
VARIABLE WIDTH STANDARD BASE DITCH
(Not to Scale)

FROM -L- STA. 14+15 TO STA. 14+45 LT

SEE SHEET 6 FOR -L- PROFILE

REVISIONS

8/17/99

4/30/2018
X:\30000\Division 4 Wayne #40\Roadway\Proj\BR50040_rdy_psh_04.dgn
User:bbowie

DocuSign Envelope ID: B1FF3320-964B-4004-8409-FE93DA1FE4F1

PROJECT REFERENCE NO.	SHEET NO.
17BP.4.R.85	05
R/W SHEET NO.	

ROADWAY DESIGN ENGINEER
NORTH CAROLINA PROFESSIONAL SEAL 020111 ENGINEER
DocuSigned by: Ryan Boakye
5/2/2018

HYDRAULICS ENGINEER
NORTH CAROLINA PROFESSIONAL SEAL 044158 ENGINEER
DocuSigned by: Benjamin J. Sherrill
5/1/2018

DOCUMENT NOT CONSIDERED FINAL UNLESS ALL SIGNATURES COMPLETED

TGS ENGINEERS
706 HILLSBOROUGH ST. SUITE 200
RALEIGH, NC 27603
PH (919) 773-8887
CORP. LICENSE NO.: C-0275

NAD 83 NA 2011

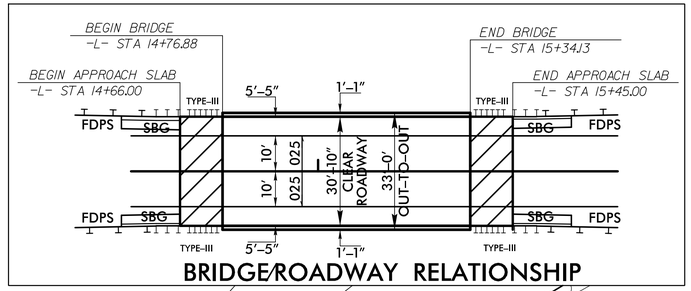

BRIDGE/ROADWAY RELATIONSHIP

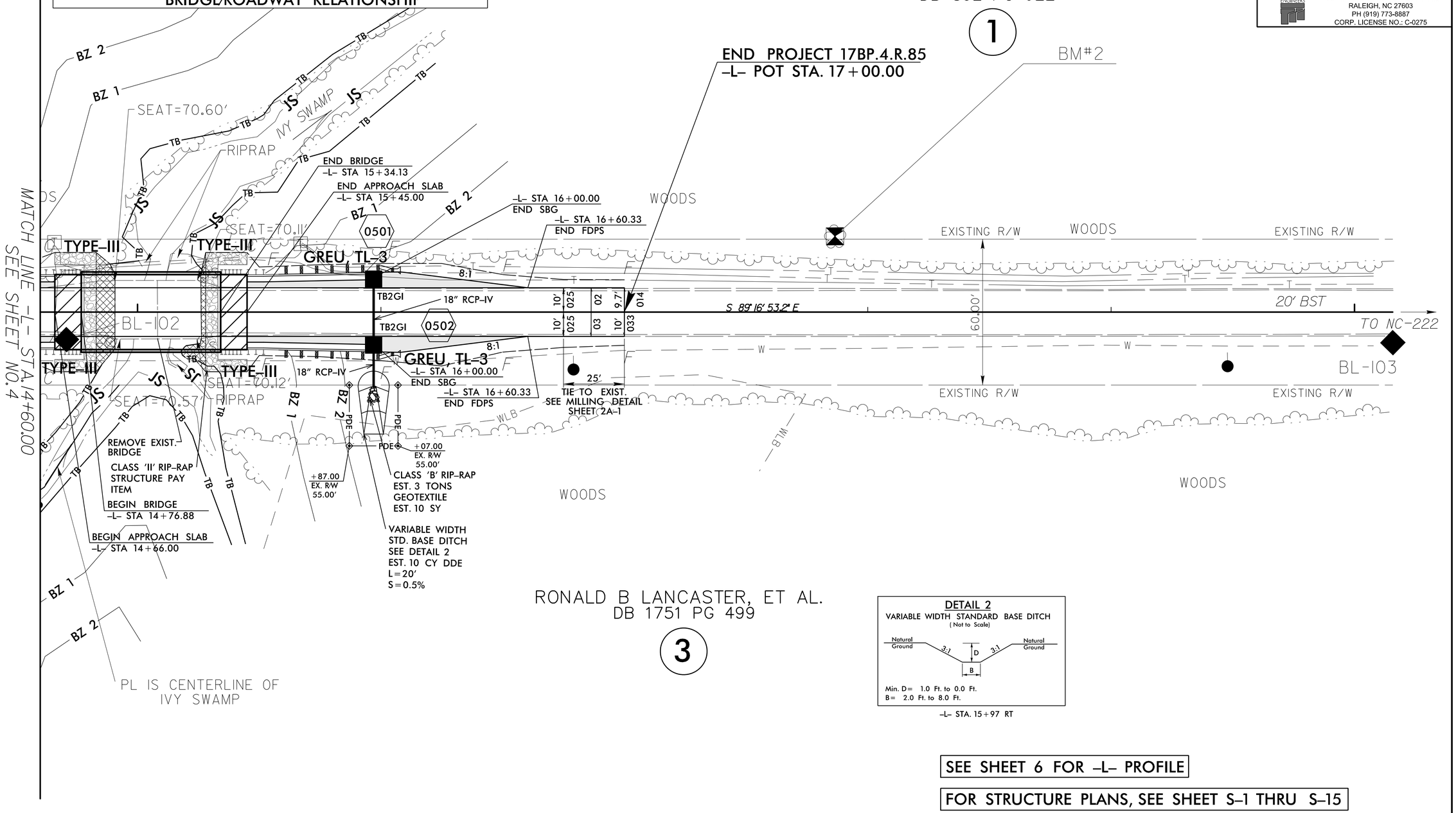

DETAIL 2
VARIABLE WIDTH STANDARD BASE DITCH
(Not to Scale)

Min. D= 1.0 Ft. to 0.0 Ft.
B= 2.0 Ft. to 8.0 Ft.

-L- STA. 15+97 RT

SEE SHEET 6 FOR -L- PROFILE

FOR STRUCTURE PLANS, SEE SHEET S-1 THRU S-15

REVISIONS

8/17/99

4/30/2018
X:\WCDOT\Division 4 Wayne #40\Roadway\Proj\BP50040_rdy_psh_05.dgn
User:boakye

DocuSign Envelope ID: B1FF3320-964B-4004-8409-FE93DA1FE4F1

5/14/99

PROJECT REFERENCE NO.	SHEET NO.
17BP.4.R.85	06

ROADWAY DESIGN ENGINEER
NORTH CAROLINA PROFESSIONAL SEAL 020111 ENGINEER
DocuSigned by: 5/2/2018

HYDRAULICS ENGINEER
NORTH CAROLINA PROFESSIONAL SEAL 044158 ENGINEER
BENJAMIN J. WENSCHAR
DocuSigned by: 5/1/2018

DOCUMENT NOT CONSIDERED FINAL UNLESS ALL SIGNATURES COMPLETED

BRIDGE HYDRAULIC DATA

DESIGN DISCHARGE	=	440 CFS
DESIGN FREQUENCY	=	25 YRS
DESIGN HW ELEVATION	=	67.6 FT
BASE DISCHARGE	=	650 CFS
BASE FREQUENCY	=	100 YRS
BASE HW ELEVATION	=	68.3 FT
OVERTOPPING DISCHARGE	=	- CFS
OVERTOPPING FREQUENCY	=	>500(+) YRS
OVERTOPPING ELEVATION	=	71.4 FT*

*OVERTOPPING ELEVATION REPRESENTS LOWEST HIGH POINT ON DECK/ROADWAY WHICH OCCURS AT SAG @ -L- STA.17+00

DATE OF SITE VISIT = 10/25/17

APPROX. W.S. ELEVATION ON DATE OF SITE VISIT = 62.3 FT

BRIDGE STA = 15+05.50 -L-
ELEV. = 72.53'
21" CORED SLAB SECTIONS
SKEW = 90°00'00"
SPAN = 1@57'-3"

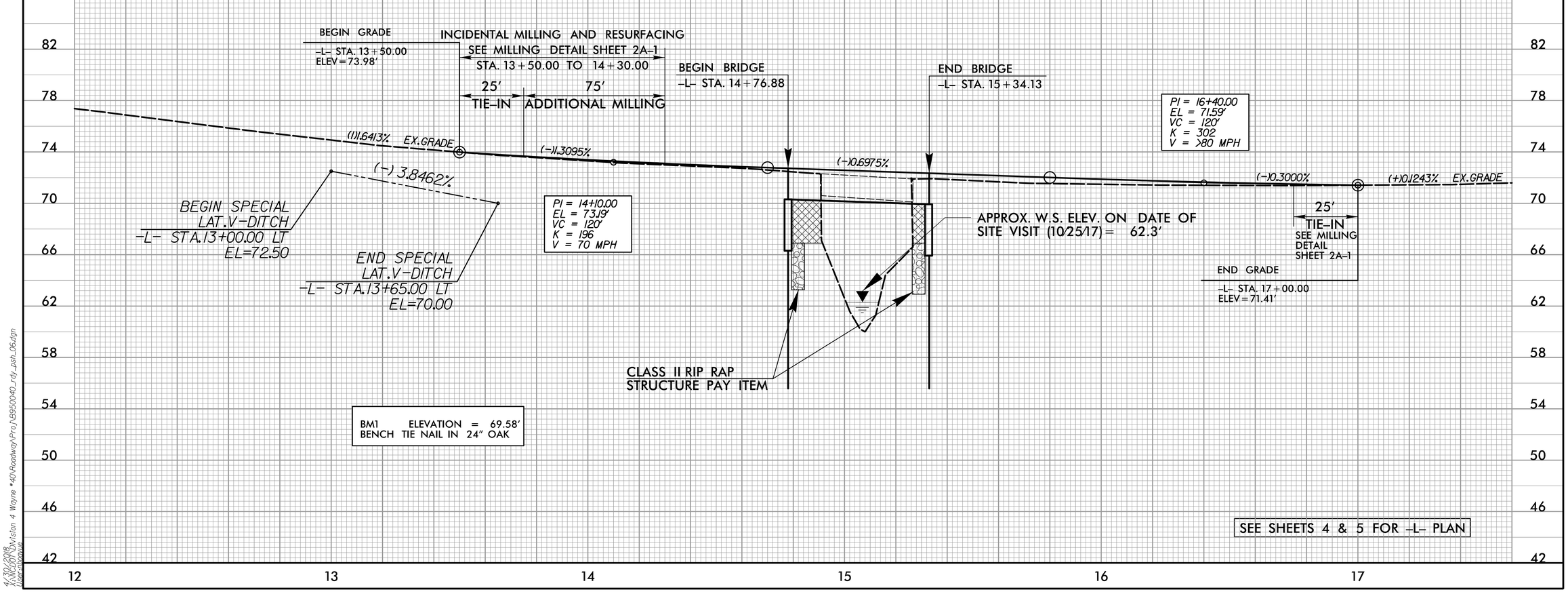

4/30/2018
4:30:18 PM
User: bbouque
Division 4 Wayne *40\Roadway\Proj\B950040_rdy_psh_06.dgn

STATE	STATE PROJECT REFERENCE NO.	SHEET NO.	TOTAL SHEETS
N.C.	95-0040	1	

STATE OF NORTH CAROLINA
DIVISION OF HIGHWAYS

RIGHT OF WAY, EASEMENTS AND PROPERTY TIES

WILSON COUNTY

TIP PROJECT: 95-0040

LOCATION: ***BRIDGE 40 OVER IVY SWAMP ON SR 1513 (RED HILL ROAD)***

TYPE OF WORK: ***BRIDGE REPLACEMENT***

NC GRID
NAD 83 NA 2011

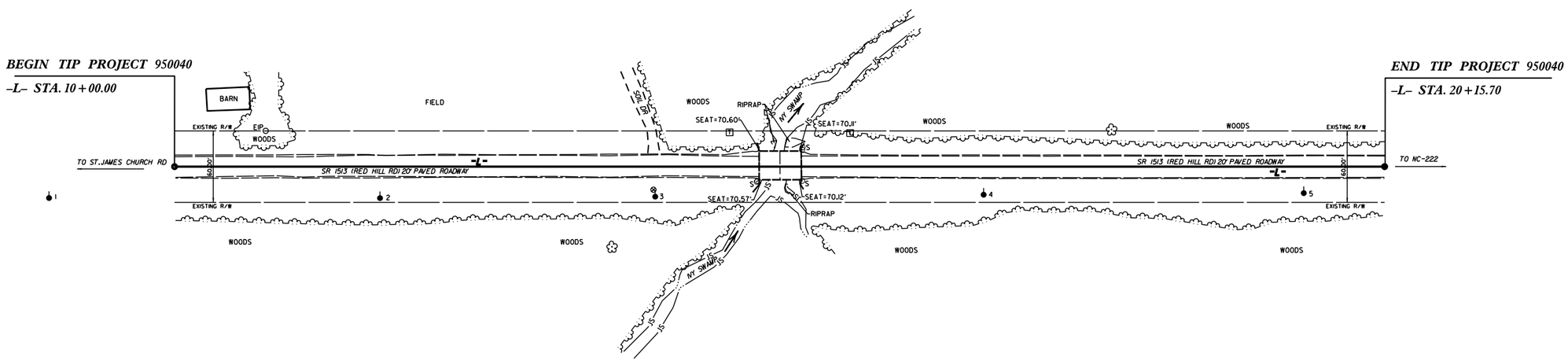

50 25 0 50 100
PLANS

DATUM DESCRIPTION

THE LOCALIZED COORDINATE SYSTEM DEVELOPED FOR THIS PROJECT
IS BASED ON THE STATE PLANE COORDINATES ESTABLISHED BY
NCDOT FOR MONUMENT "950040-2"
WITH NAD 83/NA 2011 STATE PLANE GRID COORDINATES OF
NORTHING: 669066.518(ft) EASTING: 2341780.844(ft)
ELEVATION: 97.274(ft)
THE AVERAGE COMBINED GRID FACTOR USED ON THIS PROJECT
(GROUND TO GRID) IS: 0.99988981
THE N.C. LAMBERT GRID BEARING AND
LOCALIZED HORIZONTAL GROUND DISTANCE FROM
"950040-2" TO -L- STATION 10+00.00 IS
N 89° 22' 24.06" E 547.53'
ALL LINEAR DIMENSIONS ARE LOCALIZED HORIZONTAL DISTANCES
VERTICAL DATUM USED IS NAVD 88

Prepared In the Office of:

DIVISION OF HIGHWAYS

1000 Birch Ridge Dr., Raleigh NC, 27610

2017 STANDARD SPECIFICATIONS

RIGHT OF WAY DATE:

LETTING DATE:

PPROFESSIONAL LAND SURVEYOR

NORTH CAROLINA PROFESSIONAL SEAL L-3860 LAND SURVEYOR JAMES M. GELLENTHIN

SIGNATURE:

STATE OF NORTH CAROLINA DEPARTMENT OF TRANSPORTATION

09/08/99

02-MAY-2018 07:22
M:\2018\35180028 4 NCDOT\J-950040 Div4 Ivy Swamp ROW Staking\DELIVERABLES\4-10-2018\950040_ls_rw01.dgn
$$$$USERNAME$$$$

PROJECT REFERENCE NO.	SHEET NO.
95-0040	RW02C-1
Location and Surveys	

SURVEY CONTROL SHEET

W/ EXISTING CENTERLINE ALIGNMENTS PRIOR TO CONSTRUCTION

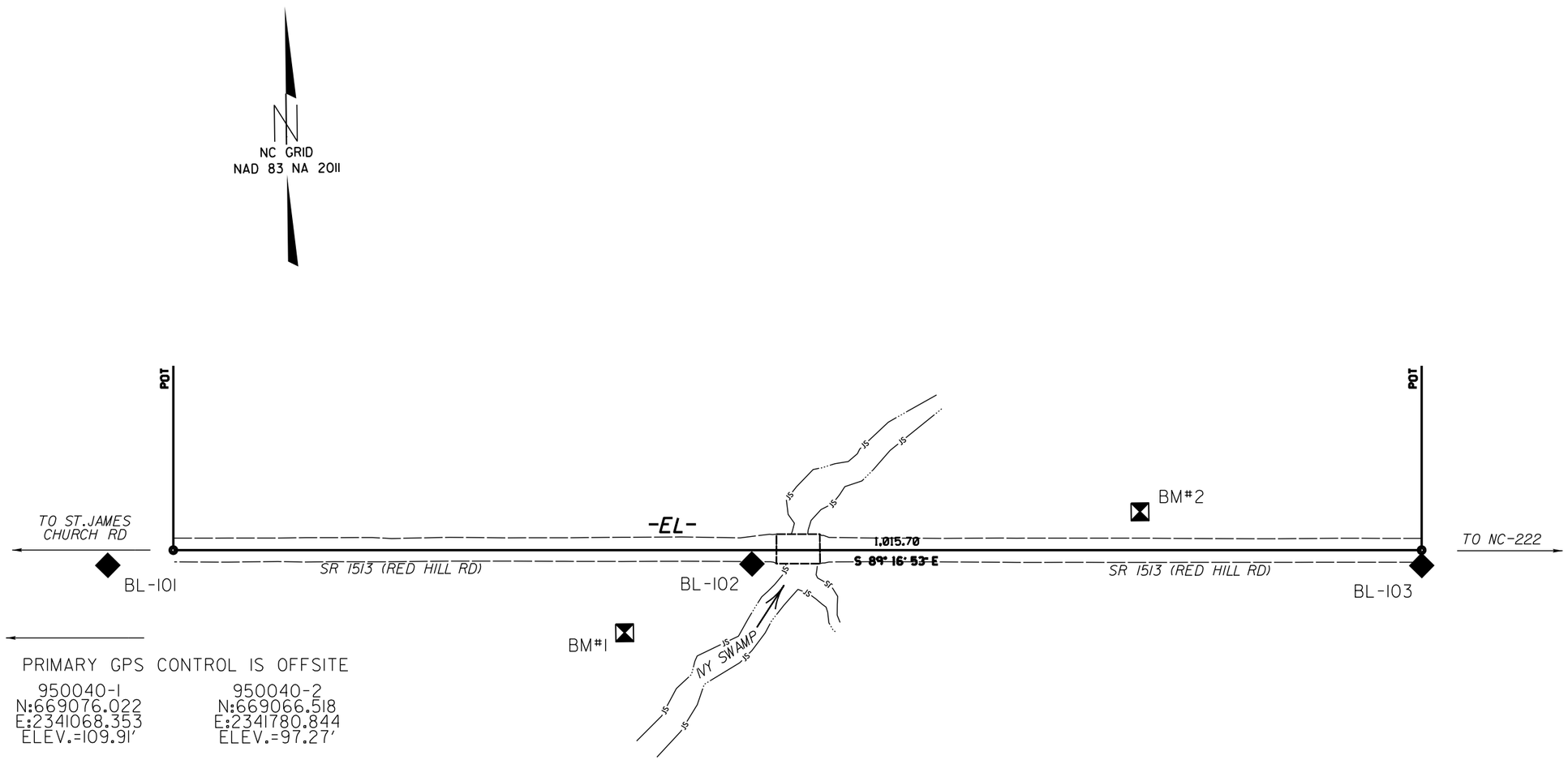

PRIMARY GPS CONTROL IS OFFSITE

950040-1	950040-2
N:669076.022	N:669066.518
E:2341068.353	E:2341780.844
ELEV.=109.91'	ELEV.=97.27'

NOTES:

1. PROJECT CONTROL WAS ESTABLISHED USING GNSS, THE GLOBAL NAVIGATION SATELLITE SYSTEM.
2. THE SURVEY CONTROL DATA FOR THIS PROJECT HAS BEEN COMPILED FROM VARIOUS SOURCES. IF FURTHER INFORMATION REGARDING PROJECT CONTROL IS NEEDED, PLEASE CONTACT THE LOCATION AND SURVEYS UNIT.

REVISIONS

6/2/99

09-APR-2018 16:32
NCDOT\U-950040 Div4 Ivy Swamp ROW Staking\DRAWINGS\950040_ls_rw02c-1.dgn

PROJECT REFERENCE NO.	SHEET NO.
95-0040	RW02C-2
Location and Surveys	

SURVEY CONTROL SHEET

W/ EXISTING CENTERLINE ALIGNMENTS PRIOR TO CONSTRUCTION

BENCHMARK DATA

****
BM1 ELEVATION = 69.58
N 669001 E 2342695
BENCH TIE NAIL IN 24" OAK
****

****
BM2 ELEVATION = 69.04
N 669094 E 2343115
BENCH TIE NAIL IN 10" OAK
****

BASELINE DATA

BL

POINT	DESC.	NORTH	EAST	ELEVATION
1	GPS-1	669076.0220	2341068.3530	109.91
2	GPS-2	669066.5180	2341780.8440	97.27
101	BL-101	669060.7800	2342274.8125	84.52
102	BL-102	669055.2973	2342798.9346	72.24
103	BL-103	669047.2018	2343343.8220	73.31

ALIGNMENT DATA

EL

POINT	N	E	BEARING	DIST
POT	669072.506	2342328.344		
LINE			S 89°16'53.2" E	1015.70
POT	669059.769	2343343.965		

NOTES:

1. PROJECT CONTROL WAS ESTABLISHED USING GNSS, THE GLOBAL NAVIGATION SATELLITE SYSTEM.

2. THE SURVEY CONTROL DATA FOR THIS PROJECT HAS BEEN COMPILED FROM VARIOUS SOURCES. IF FURTHER INFORMATION REGARDING PROJECT CONTROL IS NEEDED, PLEASE CONTACT THE LOCATION AND SURVEYS UNIT.

REVISIONS

REVISIONS

6/2/99

09-APR-2018 11:58
C:\pwworking\ncdot\d0284\wf_NCDOT_J-950040_Div4_Ivy_Swamp_ROW_Staking_DRAWINGS_950040_ls_rw02c-2.dgn
$$$$USERNAME$$$$

PROJECT REFERENCE NO.	SHEET NO.
95-0040	RW02D-1
Location and Surveys	

PROPOSED ALIGNMENT CONTROL SHEET

L

POINT	N	E	BEARING	DIST
POT	669072.506	2342328.344		
LINE			S 89°16'53.2" E	1015.70
POT	669059.769	2343343.965		

NOTES:

1. PROJECT CONTROL WAS ESTABLISHED USING GNSS, THE GLOBAL NAVIGATION SATELLITE SYSTEM.

2. THE PROPOSED ALIGNMENT CONTROL DATA FOR THIS PROJECT HAS BEEN COMPILED FROM VARIOUS SOURCES. IF FURTHER INFORMATINO REGARDING PROJECT CONTROL IS NEEDED, PLEASE CONTACT THE LOCATION AND SURVEYS UNIT.

REVISIONS

6/2/99

02-MAY-2018 08:30
02-MAY-2018 08:24 NCDOT\J-950040 Div4 Ivy Swamp ROW Staking\DRAWINGS\950040_ls_rw02d-1.dgn
$$$$USERNAME$$$$

RIGHT OF WAY CONTROL SHEET

PROJECT REFERENCE NO.	SHEET NO.
95-0040	RW02E-1

Location and Surveys

PROJECT SURVEYOR

NORTH CAROLINA PROFESSIONAL SEAL L-3860 LAND SURVEYOR JAMES M. GELLENTHIN

I, JAMES M. GELLENTHIN, a Professional Land Surveyor in the state of North Carolina hereby certify to the best of my knowledge and belief that the following work item(s) (R/W Staking) performed under my responsible charge meet NCDOT Survey Standards as directed in the NCDOT Location & Surveys guidelines and procedures.

I further certify that the right of way and permanent easement points shown herein and outlined in the tables shown hereon (localized coordinates, station/offset) have been checked and are accurate representations of the right of way and permanent easement points depicted on the corresponding highway plans. I also certify that the right of way and permanent easement points shown herein have been field monumented under my supervision from existing survey control provided by others; that the depicted property data shown herein were surveyed by others; and these monuments denote the right of way and easement boundaries at the time of staking which may be subject to change due to right of way revisions (See deeds for final determination).

Witness my original signature, registration number and seal this 2nd day of May, 2018.

---------- L-3860
Professional Land Surveyor PLS * Seal

ROW MARKER PERMANENT EASEMENT-E

ALIGN	STATION	OFFSET	NORTH	EAST
L	13+65.00	-30.00	669097.9270	2342693.7000
L	14+22.00	-30.00	669097.2080	2342750.6930
L	14+22.00	-36.00	669103.2160	2342750.7540
L	14+50.00	-72.00	669138.8620	2342779.2070
L	14+59.00	-54.00	669120.7530	2342787.9910
L	15+87.00	30.00	669035.1460	2342914.9310
L	15+87.00	55.00	669010.1480	2342914.6190
L	16+07.00	55.00	669009.9020	2342934.5980
L	16+07.00	30.00	669034.8880	2342934.9190

NOTES:

1. IF FURTHER INFORMATION REGARDING PROJECT CONTROL IS NEEDED, PLEASE CONTACT THE LOCATION AND SURVEYS UNIT.

2. PROJECT CONTROL WAS ESTABLISHED USING GNSS, THE GLOBAL NAVIGATION SATELLITE SYSTEM.

REVISIONS

6/2/99

02-MAY-2018 08:14
NCDOT\J-950040 Div4 Ivy Swamp ROW Staking\DRAWINGS\950040_ls_rw02e-1.dgn
$$$$USERNAME$$$$

PROJECT REFERENCE NO.	SHEET NO.
95-0040	RW04
Location and Surveys	

SURVEY CONTROL SHEET

W/ EXISTING CENTERLINE ALIGNMENTS PRIOR TO CONSTRUCTION

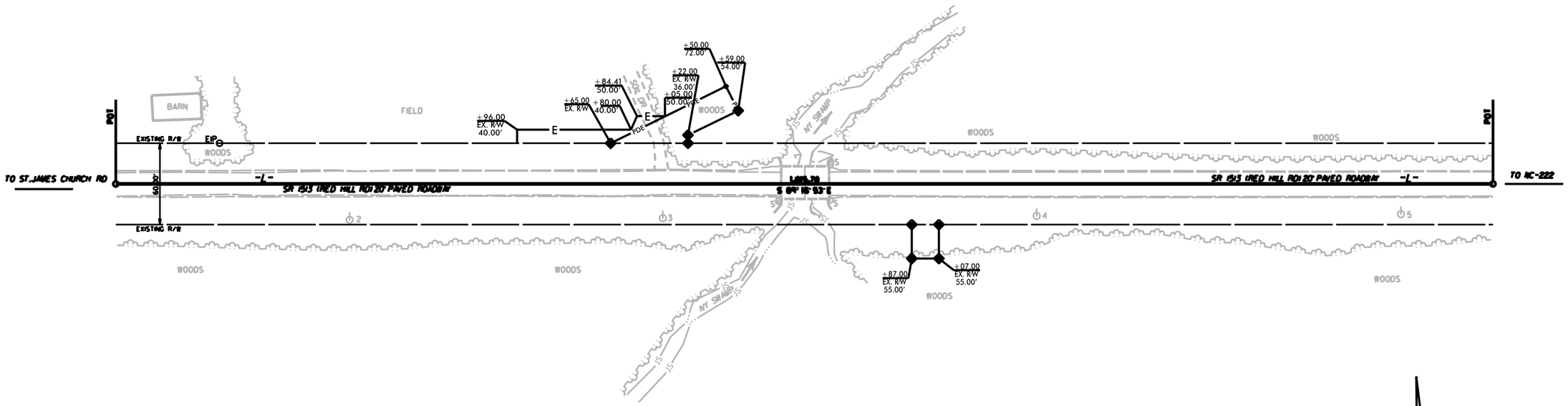

NC GRID
NAD 83 NA 2011

I, James M Gellenthin, a Professional Land Surveyor in the state of North Carolina hereby certify to the best of my knowledge and belief that the following work item(s) (R/W Staking) performed under my responsible charge meet NCDOT Survey Standards as directed in the NCDOT Location & Surveys guidelines and procedures.

I further certify that the right of way and permanent easement points shown herein and outlined in the tables shown hereon (localized coordinates, station/offset) have been checked and are accurate representations of the right of way and permanent easement points depicted on the corresponding highway plans. I also certify that the right of way and permanent easement points shown herein have been field monumented under my supervision from existing survey control provided by others; that the depicted property data shown herein were surveyed by others; and these monuments denote the right of way and easement boundaries at the time of staking which may be subject to change due to right of way revisions (See deeds for final determination).

Witness my original signature, registration number and seal this 9th day of April, 2018.

_____ L-3860

Professional Land Surveyor PLS # Seal

NORTH CAROLINA PROFESSIONAL SEAL L-3860 LAND SURVEYOR JAMES M. GELLENTHIN

NOTES:

1. PROJECT CONTROL WAS ESTABLISHED USING GNSS, THE GLOBAL NAVIGATION SATELLITE SYSTEM.
2. THE SURVEY CONTROL DATA FOR THIS PROJECT HAS BEEN COMPILED FROM VARIOUS SOURCES. IF FURTHER INFORMATION REGARDING PROJECT CONTROL IS NEEDED, PLEASE CONTACT THE LOCATION AND SURVEYS UNIT.

REVISIONS

6/2/99

09-APR-2018 14:03
M:\Mapping\Projects\95-0040 NCDOT\1-950040 Div4 Ivy Swamp ROW Staking\DELIVERABLES\4-9-2018\B950040_ls_rw04.dgn

DocuSign Envelope ID: B1FF3320-964B-4004-8409-FE93DA1FE4F1

STATE OF NORTH CAROLINA
DIVISION OF HIGHWAYS

TRANSPORTATION MANAGEMENT PLAN

WAYNE COUNTY

BRIDGE #950040

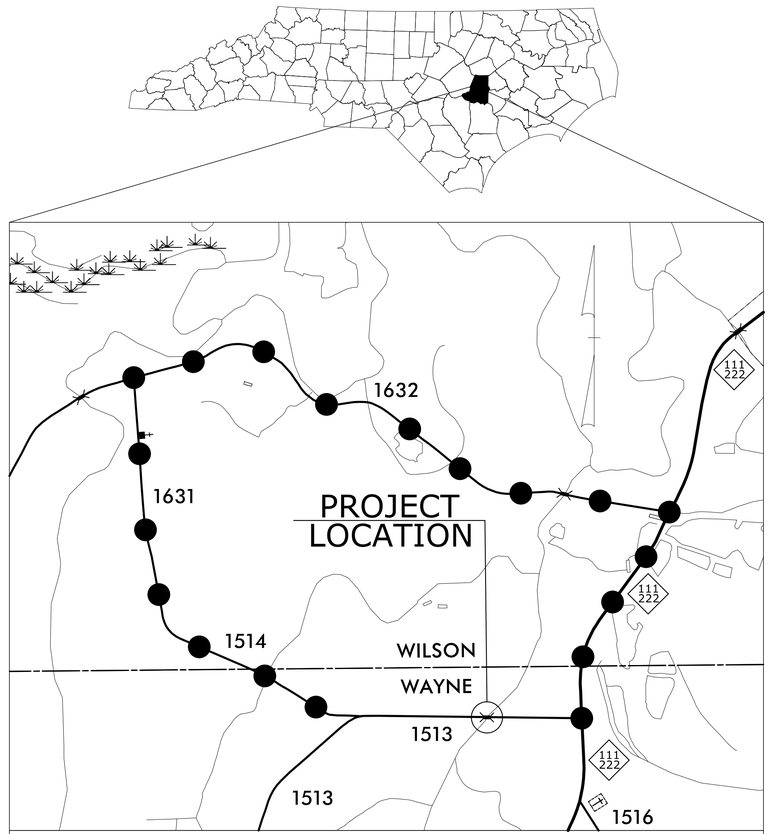

VICINITY MAP
OFFSITE DETOUR

INDEX OF SHEETS

SHEET NO.	TITLE
TMP-1	TITLE SHEET, VICINITY MAP, AND INDEX OF SHEETS
TMP-1A	LIST OF APPLICABLE ROADWAY STANDARD DRAWINGS, AND LEGEND
TMP-1B	TRANSPORTATION OPERATIONS PLAN: (MANAGEMENT STRATEGIES, GENERAL NOTES, AND LOCAL NOTES)
TMP-1C	SPECIAL SIGN DESIGN
TMP-2	OVERVIEW AND PHASING
TMP-3	OFFSITE DETOUR LOCATION AND BARRICADE PLACEMENT
PMP-1	FINAL PAVEMENT MARKING PLAN AND SCHEDULE

SHEET NO.
TMP-1

PROJECT: 17BP.4.R.85

NCDOT CONTACT INFORMATION:
Phone: 252 640 6434 Fax: 252 234 6174
RACHEL EVANS, PE
Project Manager

DOCUMENT NOT CONSIDERED FINAL
UNLESS ALL SIGNATURES COMPLETED

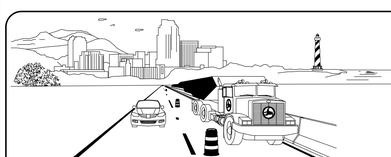

WORK ZONE SAFETY & MOBILITY
"from the MOUNTAINS to the COAST"

PLAN PREPARED FOR N.C.D.O.T. BY:

TGS ENGINEERS
804-C N. LAFAYETTE ST
SHELBY, NC 28150
PH (704) 476-0003
CORP. LICENSE NO.: C-0275

NYA K. BOAYUE, PE — *PROJECT ENGINEER*
PAUL SCHULKEN, EI — *DESIGN ENGINEER*

DIVISION OF HIGHWAYS
STATE OF NORTH CAROLINA
DEPARTMENT OF TRANSPORTATION
WORK ZONE TRAFFIC CONTROL

APPROVED: _____

DATE: _____

NORTH CAROLINA PROFESSIONAL SEAL 020111 ENGINEER NYA K. BOAYUE

DocuSigned by: 5/27/2018

4/30/2018
X:\NCDOT\Division 4 Wayne #40\Traffic\TrafficControl\TCP\950040_TC_TMP_01(TSH).dgn
User:nboayue

DocuSign Envelope ID: B1FF3320-964B-4004-8409-FE93DA1FE4F1

Wayne County
Bridge #950040

PROJ. REFERENCE NO.	SHEET NO.
17BP.4.R.85	TMP-1A

TGS ENGINEERS
804-C N. LAFAYETTE ST
SHELBY, NC 28150
PH (704) 476-0003
CORP. LICENSE NO.: C-0275

ROADWAY STANDARD DRAWINGS

THE FOLLOWING ROADWAY STANDARDS AS SHOWN IN "ROADWAY STANDARD DRAWINGS" - PROJECT SERVICES UNIT - N.C. DEPARTMENT OF TRANSPORTATION - RALEIGH, N.C., DATED JANUARY 2018 ARE APPLICABLE TO THIS PROJECT AND BY REFERENCE HEREBY ARE CONSIDERED A PART OF THESE PLANS:

STD. NO.	TITLE
1101.01	WORK ZONE ADVANCE WARNING SIGNS
1101.02	TEMPORARY LANE CLOSURES
1101.03	TEMPORARY ROAD CLOSURES
1101.11	TRAFFIC CONTROL DESIGN TABLES
1110.01	STATIONARY WORK ZONE SIGNS
1110.02	PORTABLE WORK ZONE SIGNS
1130.01	DRUM
1135.01	CONES
1145.01	BARRICADES
1150.01	FLAGGING DEVICES
1165.01	WORK VEHICLE LIGHTING SYSTEMS AND TMA DELINEATION
1205.01	PAVEMENT MARKINGS - LINE TYPES AND OFFSETS
1205.02	PAVEMENT MARKINGS - TWO-LANE AND MULTI-LANE ROADWAYS
1205.12	PAVEMENT MARKINGS - BRIDGES
1261.01	GUARDRAIL AND BARRIER DELINEATORS - INSTALLATION SPACING
1261.02	GUARDRAIL AND BARRIER DELINEATORS - TYPES AND MOUNTING
1262.01	GUARDRAIL END DELINEATION

LEGEND

GENERAL

- DIRECTION OF TRAFFIC FLOW
- DIRECTION OF PEDESTRIAN TRAFFIC FLOW
- EXIST. PVMT.
- NORTH ARROW
- PROPOSED PVMT.
- TEMP. SHORING (LOCATION PURPOSES ONLY)
- WORK AREA
- REMOVAL

SIGNALS

- EXISTING
- PROPOSED
- TEMPORARY

PAVEMENT MARKINGS

- EXISTING LINES
- TEMPORARY LINES

TRAFFIC CONTROL DEVICES

- BARRICADE (TYPE III)
- CONE
- DRUM
- SKINNY DRUM
- TUBULAR MARKER
- TEMPORARY CRASH CUSHION
- FLASHING ARROW BOARD
- FLAGGER
- LAW ENFORCEMENT
- TRUCK MOUNTED ATTENUATOR (TMA)
- CHANGEABLE MESSAGE SIGN

TEMPORARY SIGNING

- PORTABLE SIGN
- STATIONARY SIGN
- STATIONARY OR PORTABLE SIGN

PAVEMENT MARKERS

- CRYSTAL/CRYSTAL
- CRYSTAL/RED
- YELLOW/YELLOW

PAVEMENT MARKING SYMBOLS

- PAVEMENT MARKING SYMBOLS

APPROVED: _____

DATE: _____

DocuSigned by:
DA2A0A1D0F72540F...
5/2/2018

NORTH CAROLINA PROFESSIONAL SEAL 020111 ENGINEER NYAL K. BOAYUE

DOCUMENT NOT CONSIDERED FINAL UNLESS ALL SIGNATURES COMPLETED

DIVISION OF HIGHWAYS
STATE OF NORTH CAROLINA
DEPARTMENT OF TRANSPORTATION
WORK ZONE TRAFFIC CONTROL

ROADWAY STANDARD DRAWINGS & LEGEND

4/30/2018
X:\NCDOT\Division 4 Wayne #40\Traffic\TrafficControl\TCP\950040_TC_TMP_01A\STA & Legend\.dgn
User:nboayue

DocuSign Envelope ID: B1FF3320-964B-4004-8409-FE93DA1FE4F1

TGS ENGINEERS
804-C N. LAFAYETTE ST
SHELBY, NC 28150
PH (704) 476-0003
CORP. LICENSE NO.: C-0275

GENERAL NOTES

CHANGES MAY BE REQUIRED WHEN PHYSICAL DIMENSIONS IN THE DETAIL DRAWINGS, STANDARD DETAILS, AND ROADWAY DETAILS ARE NOT ATTAINABLE TO MEET FIELD CONDITIONS OR RESULT IN DUPLICATE OR UNDESIRED OVERLAPPING OF DEVICES. MODIFICATION MAY INCLUDE: MOVING, SUPPLEMENTING, COVERING, OR REMOVAL OF DEVICES AS DIRECTED BY THE ENGINEER.

THE FOLLOWING GENERAL NOTES APPLY AT ALL TIMES FOR THE DURATION OF THE CONSTRUCTION PROJECT EXCEPT WHEN OTHERWISE NOTED IN THE PLAN OR DIRECTED BY THE ENGINEER.

TRAFFIC PATTERN ALTERATIONS

A) THE CONTRACTOR SHALL PROVIDE ONE MONTH NOTICE TO THE ENGINEER, COUNTY EMS AND COUNTY SCHOOL OFFICIALS PRIOR TO ROAD CLOSURES.

SIGNING

B) INSTALL ADVANCE WORK ZONE WARNING SIGNS WHEN WORK IS WITHIN 40 FT FROM THE EDGE OF TRAVEL LANE AND NO MORE THAN THREE (3) DAYS PRIOR TO THE BEGINNING OF CONSTRUCTION.

C) PROVIDE SIGNING AND DEVICES REQUIRED TO CLOSE THE ROAD ACCORDING TO THE ROADWAY STANDARD DRAWINGS AND TRAFFIC CONTROL PLANS.

PROVIDE SIGNING REQUIRED FOR THE OFF-SITE DETOUR ROUTE AS SHOWN IN THE TRAFFIC CONTROL PLANS.

D) COVER OR REMOVE ALL SIGNS AND DEVICES REQUIRED TO CLOSE THE ROAD WHEN ROAD CLOSURE IS NOT IN OPERATION.

COVER OR REMOVE ALL SIGNS REQUIRED FOR THE OFF-SITE DETOUR WHEN THE DETOUR IS NOT IN OPERATION.

E) ENSURE ALL NECESSARY SIGNING IS IN PLACE PRIOR TO ALTERING ANY TRAFFIC PATTERN.

TRAFFIC BARRIERS

F) INSTALL TEMPORARY TRAFFIC BARRIER SYSTEM A MAXIMUM OF TWO (2) WEEKS PRIOR TO BEGINNING WORK IN ANY LOCATION. ONCE THE TEMPORARY TRAFFIC BARRIER SYSTEM IS INSTALLED AT ANY LOCATION, PROCEED IN A CONTINUOUS MANNER TO COMPLETE THE PROPOSED WORK IN THAT LOCATION.

TRAFFIC CONTROL DEVICES

G) PLACE TYPE III BARRICADES, WITH "ROAD CLOSED" SIGN R11-2 ATTACHED, OF SUFFICIENT LENGTH TO CLOSE ENTIRE ROADWAY.

GENERAL NOTES

PAVEMENT MARKINGS AND MARKERS

H) INSTALL PAVEMENT MARKINGS ON THE FINAL SURFACE AS SHOWN IN THE PAVEMENT MARKING PLAN. (SEE NOTE ON PASSING ZONES, SHEET PMP-1)

I) TIE PROPOSED PAVEMENT MARKING LINES TO EXISTING PAVEMENT MARKING LINES.

J) REMOVE ANY CONFLICTING MARKINGS OR MARKERS BEFORE SHIFTING TRAFFIC TO A NEW PATTERN.

LANE AND SHOULDER CLOSURE REQUIREMENTS

K) WHEN PERSONNEL AND/OR EQUIPMENT ARE WORKING WITHIN 15 FT OF AN OPEN TRAVEL LANE, CLOSE THE NEAREST OPEN SHOULDER USING ROADWAY STANDARD DRAWING NO. 1101.04 UNLESS THE WORK AREA IS PROTECTED BY BARRIER OR GUARDRAIL OR A LANE CLOSURE IS INSTALLED.

L) WHEN PERSONNEL AND/OR EQUIPMENT ARE WORKING ON THE SHOULDER ADJACENT TO AN UNDIVIDED FACILITY AND WITHIN 5 FT OF AN OPEN TRAVEL LANE, CLOSE THE NEAREST OPEN TRAVEL LANE USING ROADWAY STANDARD DRAWING NO. 1101.02 UNLESS THE WORK AREA IS PROTECTED BY BARRIER OR GUARDRAIL.

MANAGEMENT STRATEGIES

DURING CONSTRUCTION OF THE PROPOSED STRUCTURE, SR 1513 (RED HILL ROAD) WILL BE CLOSED TO THROUGH TRAFFIC. SR 1513 (RED HILL ROAD) TRAFFIC WILL BE MAINTAINED ON THE FOLLOWING DETOUR: FROM SR 1514 (ST. JAMES CHURCH ROAD) TO 1631 (ST. JAMES CHURCH ROAD) TO SR 1632 (PELT ROAD) TO NC 111 / NC 222.

COORDINATE CONSTRUCTION ACTIVITES OF THIS PROJECT WITH 17BP.4.R.86 SO THAT BRIDGE NO. 950040 AND BRIDGE NO. 970016 ARE NOT CLOSED TO TRAFFIC AT THE SAME TIME.

LOCAL NOTES

ACCESS TO ALL DRIVEWAYS MUST BE PROVIDED AT ALL TIMES WITHIN THE PROJECT LIMITS.

THE CONTRACTOR SHALL COORDINATE WITH THE RESIDENT ENGINEER ON BUS TURNAROUNDS AND PROVIDE BUS TURNAROUNDS WITH ABC AS APPLICABLE.

APPROVED: _____

DATE: _____

DocuSigned by:
D433DCD97204OF...
5/2/2018

NORTH CAROLINA PROFESSIONAL SEAL 020111 ENGINEER NINA K BOAYUE

DOCUMENT NOT CONSIDERED FINAL UNLESS ALL SIGNATURES COMPLETED

DIVISION OF HIGHWAYS STATE OF NORTH CAROLINA DEPARTMENT OF TRANSPORTATION WORK ZONE TRAFFIC CONTROL

TRANSPORTATION OPERATIONS PLAN

4/30/2018
X:\NCDOT\Division 4 Wayne #40\Traffic\TrafficControl\TCP\950040_TC_TMP_01B(TOP).dgn
User:nboayue

DocuSign Envelope ID: B1FF3320-964B-4004-8409-FE93DA1FE4F1

Wayne County
Bridge #950040

PROJ. REFERENCE NO.	SHEET NO.
17BP.4.R.85	TMP-1C

TGS ENGINEERS
804-C N. LAFAYETTE ST
SHELBY, NC 28150
PH (704) 476-0003
CORP. LICENSE NO.: C-0275

SIGN NUMBER: DET-1
TYPE: D
QUANTITY: SEE PLANS

SIGN WIDTH: 3′-6″
HEIGHT: 2′-6″
TOTAL AREA: 8.8 Sq.Ft.

BORDER TYPE: FLUSH
RECESS: 0.38″
WIDTH: 0.5″
RADII: 1.5″

NO. Z BARS:
LENGTH:

BACKG COLOR: Orange
COPY COLOR: Black

SYMBOL	X	Y	WID	HT

MAT′L: 0.125″ (3.2 mm) ALUMINUM

USE NOTES: 1,2

1. Legend and border(except those that are colored black) shall be direct applied Grade C sheeting.
2. Background shall be Grade C reflective sheeting.

DESIGN BY: SGM
CHECKED BY:
Dec 19, 2017
PROJECT ID: 17BP.4.R.85
LOCATION: WAYNE COUNTY
DIV: 4

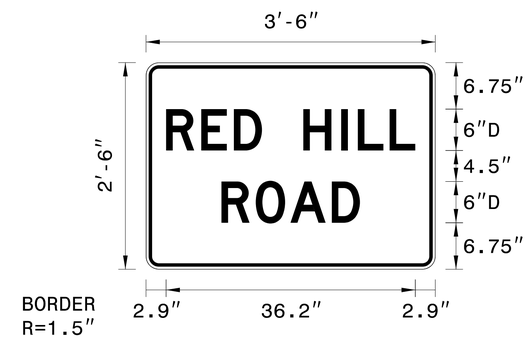

BORDER
R=1.5″
TH=0.5″
IN=0.38″

Panel Style: Traffic Control.ssi
M.U.T.C.D.: 2009 Edition

Spacing Factor is 1 unless specified otherwise

LETTER POSITIONS

Letter locations are panel edge to lower left corner

									Series/Size Text Length
	R	E	D		H	I	L	L	D 2000
	2.9	8	12.8	16.8	22.8	28.4	30.8	35.4	36.2
	R	O	A	D					D 2000
	11	15.9	21	27					20.1

FILENAME: 970016_TC_TMP_01C(SD)

NORTH CAROLINA D.O.T. SIGN DETAIL

APPROVED:
DATE:

DocuSigned by:
DA3DEC0F7E2A4F...
5/2/2018

NORTH CAROLINA PROFESSIONAL SEAL 020111 ENGINEER NAYA K. BOAYUE

DOCUMENT NOT CONSIDERED FINAL UNLESS ALL SIGNATURES COMPLETED

DIVISION OF HIGHWAYS
STATE OF NORTH CAROLINA
DEPARTMENT OF TRANSPORTATION
WORK ZONE TRAFFIC CONTROL

SPECIAL SIGN DESIGN

4/30/2018
X:\NCDOT\Division 4 Wayne #40\Traffic\TrafficControl\TCP\950040_TC_TMP_01C(SD).dgn
User:nboayue

DocuSign Envelope ID: B1FF3320-964B-4004-8409-FE93DA1FE4F1

Wayne County
Bridge #950040

PROJ. REFERENCE NO.	SHEET NO.
17BP.4.R.85	TMP-2

TGS ENGINEERS
804-C N. LAFAYETTE ST
SHELBY, NC 28150
PH (704) 476-0003
CORP. LICENSE NO.: C-0275

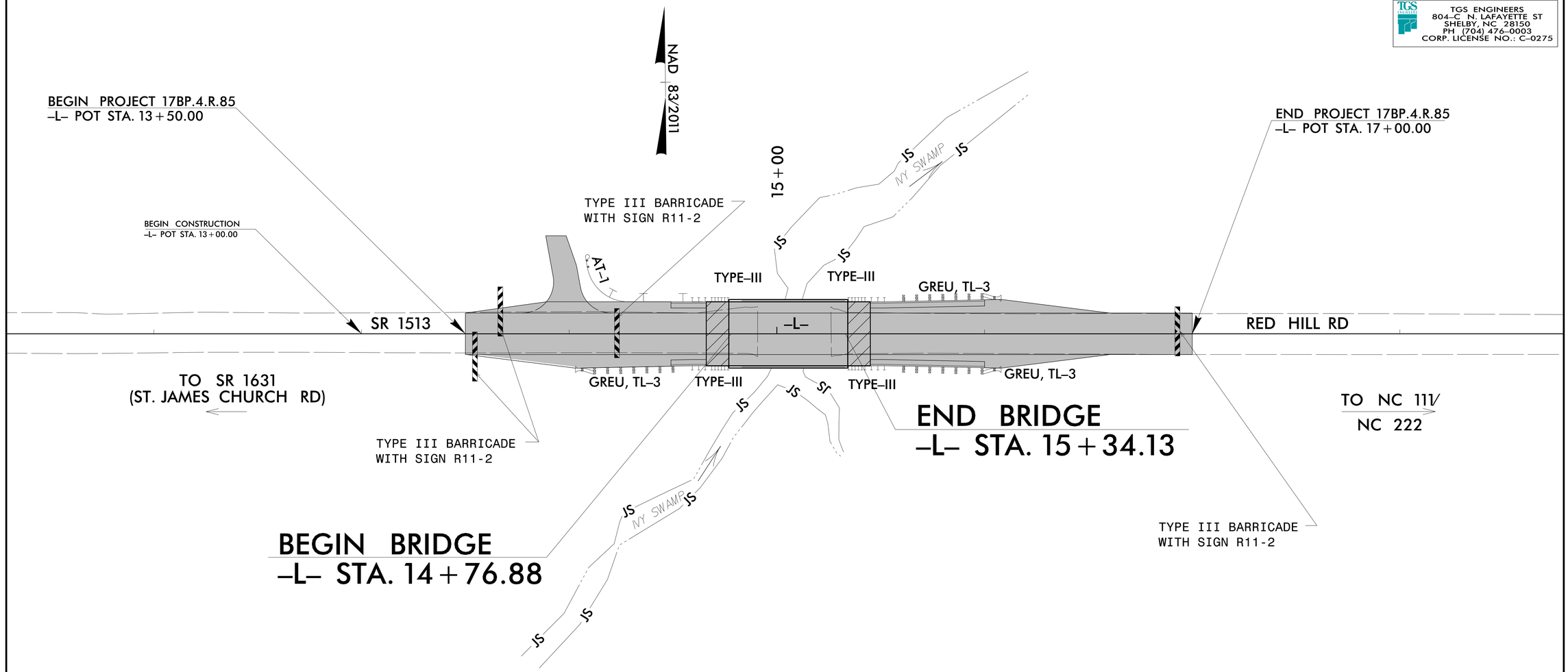

PHASING NOTES

STEP 1: INSTALL ALL DETOUR ROUTE SIGNS AS SHOWN ON SHEET TMP-3.

STEP 2: INSTALL TYPE III BARRICADES AND SIGNS, AND CLOSE SR 1513 (RED HILL RD) TO TRAFFIC AS SHOWN IN ROADWAY STANDARD DRAWING 1101.03 (SHEET 1 OF 9) AND TMP-2 AND TMP-3.

PLACE TRAFFIC ON DETOUR.

STEP 3: DEMOLISH AND REMOVE THE EXISTING BRIDGE OVER IVY SWAMP.

CONSTRUCT THE NEW BRIDGE OVER IVY SWAMP FROM -L- STA. 14+78.00 TO 15+33.00.

CONSTRUCT THE ROADWAY ON SR 1513 (RED HILL RD) FROM -L- STA. 13+50.00 TO -L- STA. 14+78.00 (BEGIN BRIDGE) AND FROM -L- STA. 15+33.00 (END BRIDGE) TO 17+00.00 UP TO AND INCLUDING THE FINAL LAYER OF SURFACE COURSE.

STEP 4: REFERRING TO SHEET PMP-1, PLACE PERMANENT PAVEMENT MARKINGS ON THE FOLLOWING: SR 1513 (RED HILL RD) FROM STA. 13+50.00 TO STA. 17+00.00.

STEP 5: REMOVE BARRICADES, SIGNS, AND ALL OTHER TRAFFIC CONTROL DEVICES AND OPEN SR 1513 (RED HILL RD) TO TRAFFIC IN FINAL PATTERN.

APPROVED: _____

DATE: _____

DocuSigned by:
D4338C09F9394F...
5/2/2018

NORTH CAROLINA PROFESSIONAL SEAL 020111 ENGINEER RYAN K. BOAYUE

DOCUMENT NOT CONSIDERED FINAL
UNLESS ALL SIGNATURES COMPLETED

DIVISION OF HIGHWAYS
STATE OF NORTH CAROLINA
DEPARTMENT OF TRANSPORTATION
WORK ZONE TRAFFIC CONTROL

OVERVIEW
AND PHASING

4/30/2018
X:\NCDOT\Division 4 Wayne #40\Traffic\TrafficControl\TCP\950040_TC_TMP_02(PHASING).dgn
User:rhboyue

DocuSign Envelope ID: B1FF3320-964B-4004-8409-FE93DA1FE4F1

Wayne County
Bridge #950040

PROJ. REFERENCE NO.	SHEET NO.
17BP.4.R.85	TMP-3

TGS ENGINEERS
804-C N. LAFAYETTE ST
SHELBY, NC 28150
PH (704) 476-0003
CORP. LICENSE NO.: C-0275

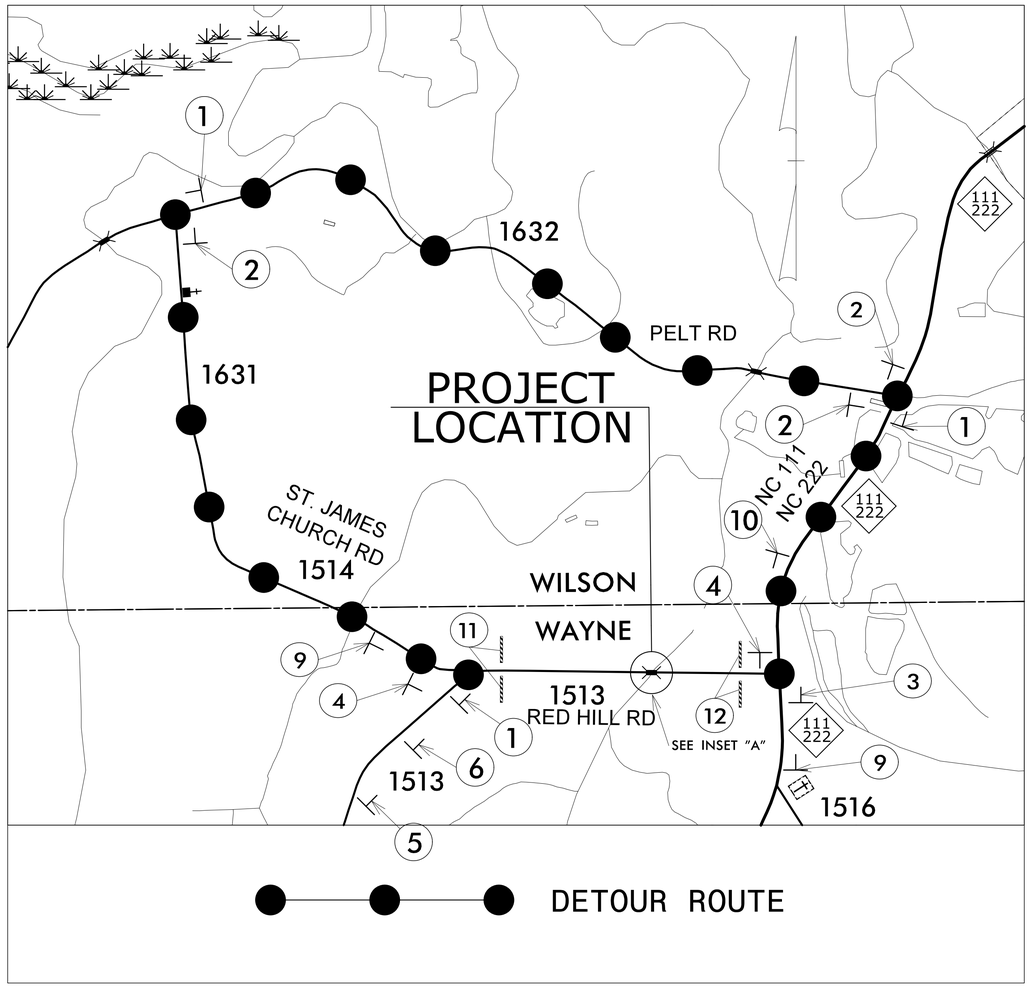

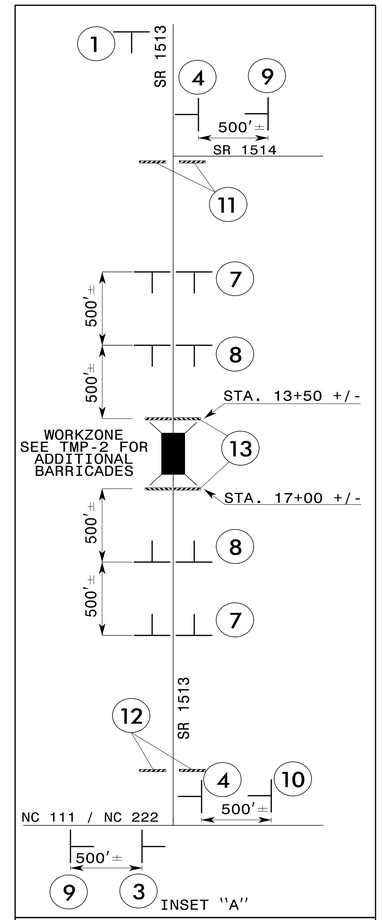

REFER TO ROADWAY STANDARD DRAWING 1101.03, SHEET 1 OF 9 FOR APPLICABLE NOTES.

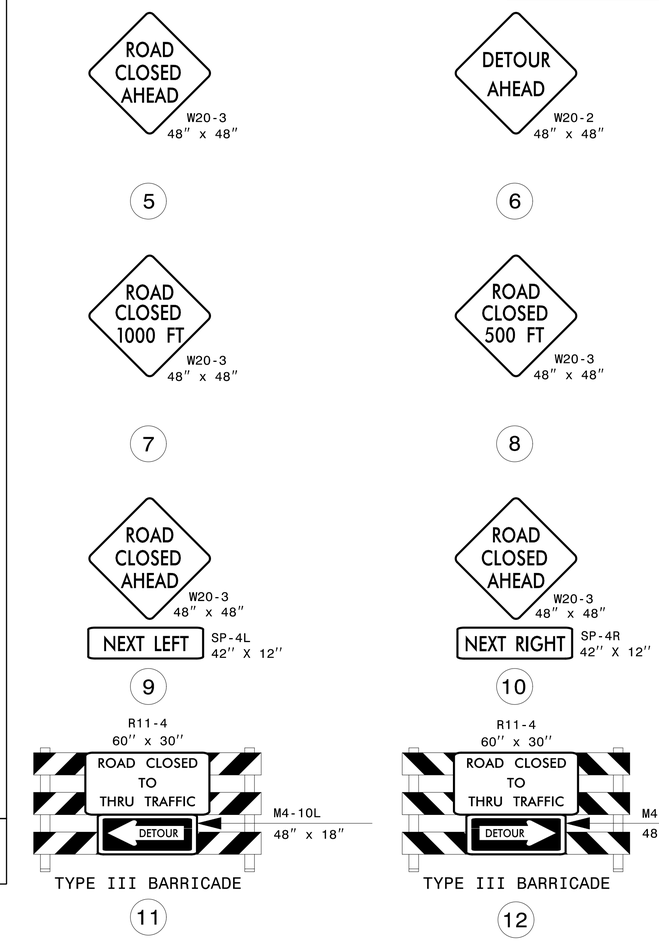

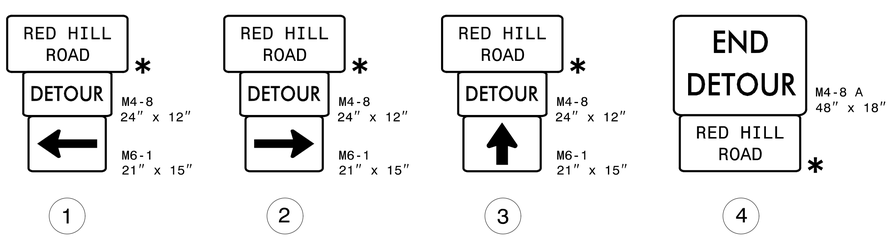

* SEE SHEET TMP-1C FOR SIGN DESIGN

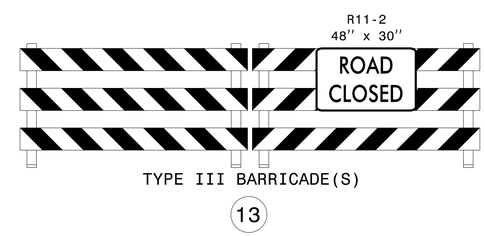

APPROVED: _____

DATE: _____

DocuSigned by: D4332ECD8F2D40F... 5/2/2018

NORTH CAROLINA PROFESSIONAL SEAL 020111 ENGINEER NYA K. BOAYUE

DOCUMENT NOT CONSIDERED FINAL UNLESS ALL SIGNATURES COMPLETED

DIVISION OF HIGHWAYS STATE OF NORTH CAROLINA DEPARTMENT OF TRANSPORTATION WORK ZONE TRAFFIC CONTROL

OFFSITE DETOUR ROUTE AND BARRICADE PLACEMENT

4/30/2018
X:\NCDOT\Division 4 Wayne #40\Traffic\TrafficControl\TCP\950040_TC_TMP_03(DETOUR).dgn
User:nboayue

DocuSign Envelope ID: B1FF3320-964B-4004-8409-FE93DA1FE4F1

Wayne County
Bridge #950040

PROJ. REFERENCE NO.	SHEET NO.
17BP.4.R.85	PMP-1

TGS ENGINEERS
804-C N. LAFAYETTE ST
SHELBY, NC 28150
PH (704) 476-0003
CORP. LICENSE NO.: C-0275

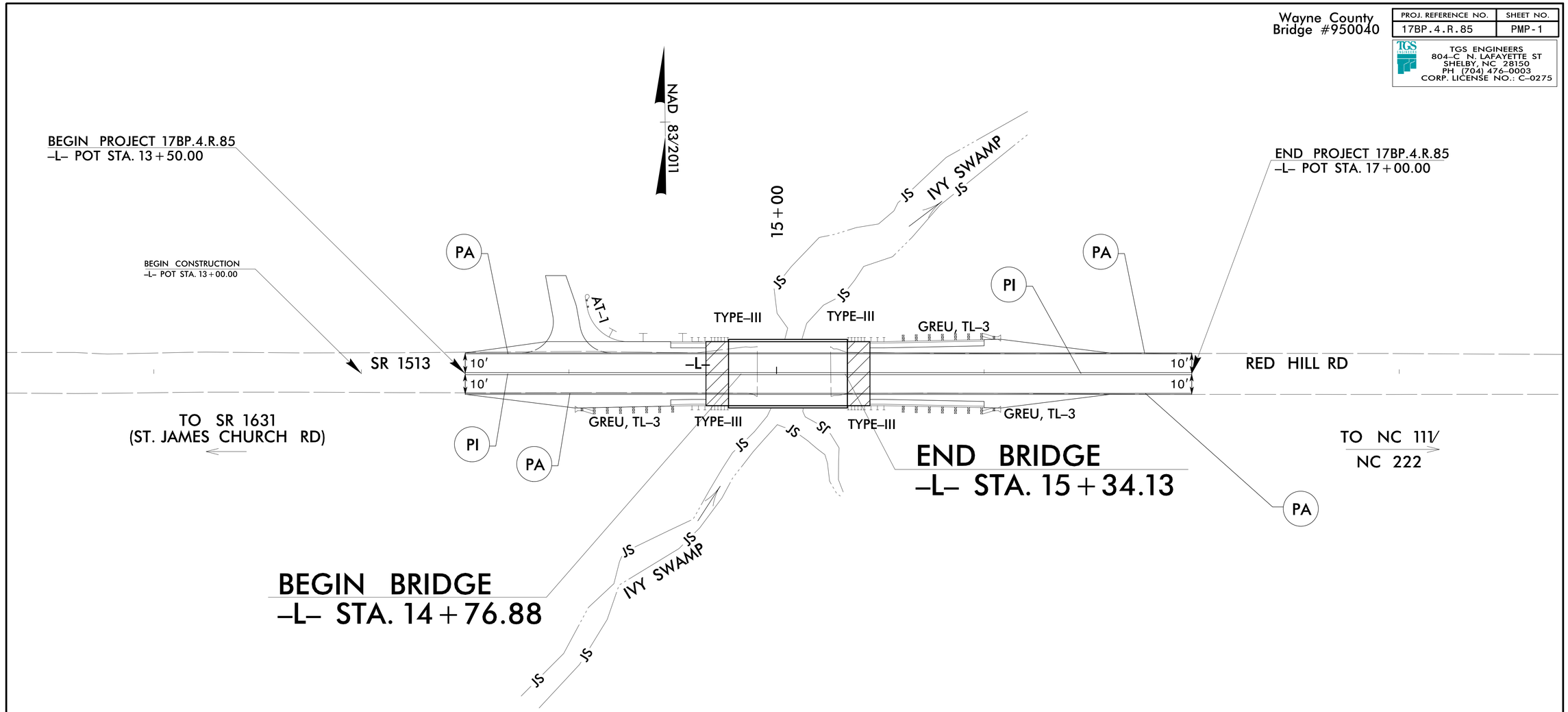

FINAL PAVEMENT MARKING SCHEDULE

SYMBOL	DESCRIPTION	PAY ITEM	TOTAL QUANTITY
PA	WHITE EDGELINE (2X)	PAINT PAVEMENT MARKING LINES (4")	1400 LF
PI	YELLOW DOUBLE CENTER (2X)	PAINT PAVEMENT MARKING LINES (4")	1400 LF
		TOTAL	2800 LF

NOTE: FOR EACH PAINT PAVEMENT MARKING ITEM, 1X IMPLIES A SINGLE APPLICATION AND 2X IMPLIES TWO APPLICATIONS.

NOTE:
PASSING ZONES WILL BE DETERMINED IN THE FIELD AND MUST BE APPROVED BY THE ENGINEER.

APPROVED: _____

DATE: _____

DocuSigned by:
5/2/2018

NORTH CAROLINA PROFESSIONAL SEAL 020111 ENGINEER NYA K. BOAYUE

DOCUMENT NOT CONSIDERED FINAL UNLESS ALL SIGNATURES COMPLETED

DIVISION OF HIGHWAYS
STATE OF NORTH CAROLINA
DEPARTMENT OF TRANSPORTATION
WORK ZONE TRAFFIC CONTROL

FINAL PAVEMENT MARKING PLAN AND SCHEDULE

4/30/2018
X:\NCDOT\Division 4 Wayne #40\Traffic\TrafficControl\TCP\950040_TC_PMP_01.dgn
User:nboayue

TIP PROJECT: 17BP.4.R.85

STATE	STATE PROJECT REFERENCE NO.	SHEET NO.	TOTAL SHEETS
N.C.	17BP.4.R.85	EC-1	

STATE PROJ. NO.	F. A. PROJ. NO.	DESCRIPTION
17BP.4.R.85	N/A	PE
17BP.4.R.85	N/A	R/W, UTIL

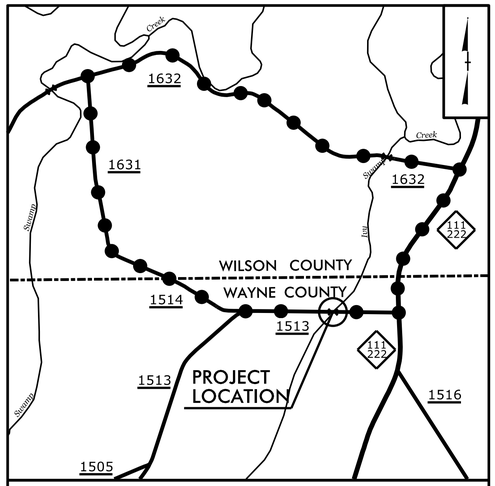

VICINITY MAP
OFFSITE DETOUR

STATE OF NORTH CAROLINA
DIVISION OF HIGHWAYS

PLAN FOR PROPOSED
HIGHWAY EROSION CONTROL

WAYNE COUNTY

LOCATION: BRIDGE NO. 40 ON SR 1513 (RED HILL ROAD) OVER IVY SWAMP

TYPE OF WORK: GRADING, DRAINAGE, PAVING, AND STRUCTURE

NAD 83 NA 2011

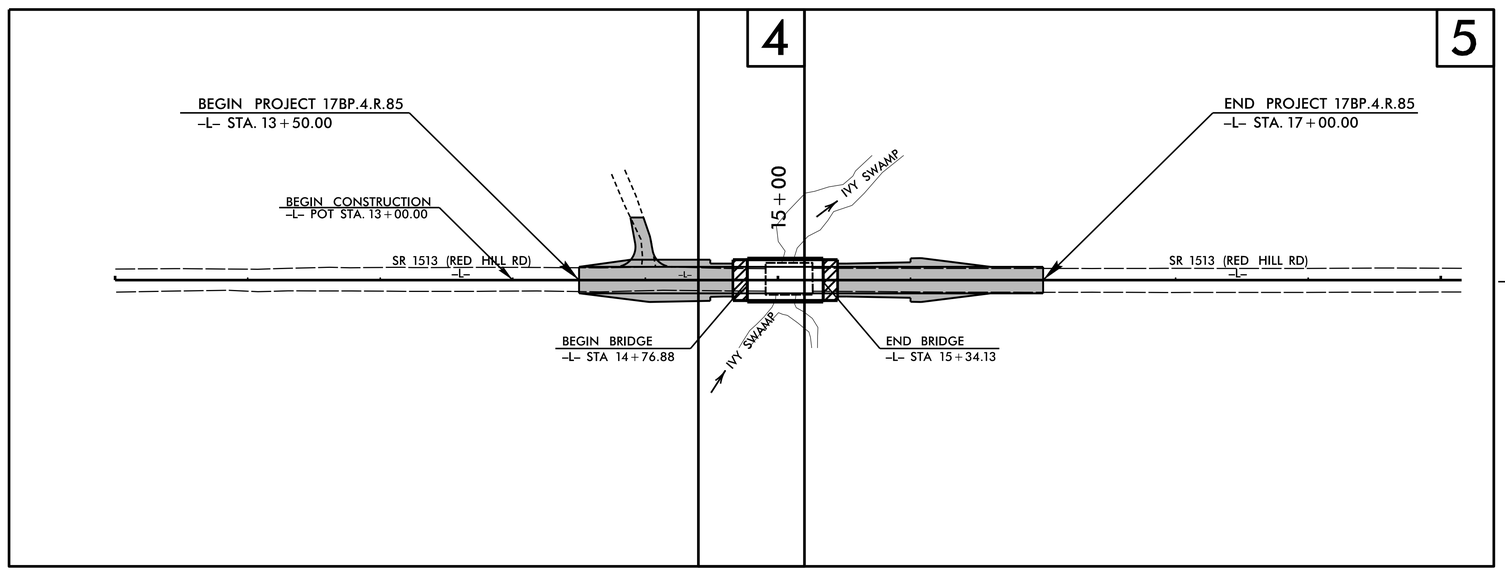

EROSION AND SEDIMENT CONTROL MEASURES

Std. #	Description	Symbol
1630.03	Temporary Silt Ditch	TSD
1630.05	Temporary Diversion	TD
1605.01	Temporary Silt Fence	
1606.01	Special Sediment Control Fence	
1622.01	Temporary Berms and Slope Drains	
1630.02	Silt Basin Type B	
1633.01	Temporary Rock Silt Check Type-A	
	Temporary Rock Silt Check Type-A with Matting and Polyacrylamide (PAM)	
1633.02	Temporary Rock Silt Check Type-B	
	Wattle/Coir Fiber Wattle	SW CW
	Wattle/Coir Fiber Wattle with Polyacrylamide (PAM)	
1634.01	Temporary Rock Sediment Dam Type-A	
1634.02	Temporary Rock Sediment Dam Type-B	
1635.01	Rock Pipe Inlet Sediment Trap Type-A	
1635.02	Rock Pipe Inlet Sediment Trap Type-B	
1630.04	Stilling Basin	
1630.06	Special Stilling Basin	
	Rock Inlet Sediment Trap:	
1632.01	Type A	A
1632.02	Type B	B
1632.03	Type C	C
	Skimmer Basin	
	Tiered Skimmer Basin	
	Infiltration Basin	

THIS PROJECT CONTAINS EROSION CONTROL PLANS FOR CLEARING AND GRUBBING PHASE OF CONSTRUCTION.

THIS PROJECT HAS BEEN DESIGNED TO SENSITIVE WATERSHED STANDARDS.

ENVIRONMENTALLY SENSITIVE AREA(S) EXIST ON THIS PROJECT

Refer To E. C. Special Provisions for Special Considerations.

GRAPHIC SCALE

0 20

PLANS

THESE EROSION AND SEDIMENT CONTROL PLANS COMPLY WITH THE REGULATIONS SET FORTH BY THE NCG-010000 GENERAL CONSTRUCTION PERMIT EFFECTIVE AUGUST 1, 2016 AND ISSUED BY THE NORTH CAROLINA DEPARTMENT OF ENVIRONMENT AND NATURAL RESOURCES DIVISION OF WATER RESOURCES.

Prepared in the Office of:

TGS ENGINEERS
706 HILLSBOROUGH ST
SUITE 200
RALEIGH, NC 27603

PH (919) 773-8887
CORP. LICENSE NO.: C-0275

Designed by:

BEN HENEGAR, PE — NAME

3564 — LEVEL III CERTIFICATION NO.

Reviewed in the Office of:

ROADSIDE ENVIRONMENTAL UNIT

1425 Rock Quarry Rd, Suite 106
Raleigh, NC 27610

2018 STANDARD SPECIFICATIONS

Reviewed by:

DONALD R. PEARSON, JR. EI, CPESC

Roadway Standard Drawings

The following roadway english standards as appear in "Roadway Standard Drawings"– Roadway Design Unit – N. C. Department of Transportation – Raleigh, N. C., dated January 2018 and the latest revison thereto are applicable to this project and by reference hereby are considered a part of these plans.

1604.01	Railroad Erosion Control Detail	1632.01	Rock Inlet Sediment Trap Type A
1605.01	Temporary Silt Fence	1632.02	Rock Inlet Sediment Trap Type B
1606.01	Special Sediment Control Fence	1632.03	Rock Inlet Sediment Trap Type C
1607.01	Gravel Construction Entrance	1633.01	Temporary Rock Silt Check Type A
1622.01	Temporary Berms and Slope Drains	1633.02	Temporary Rock Silt Check Type B
1630.01	Riser Basin	1634.01	Temporary Rock Sediment Dam Type A
1630.02	Silt Basin Type B	1634.02	Temporary Rock Sediment Dam Type B
1630.03	Temporary Silt Ditch	1635.01	Rock Pipe Inlet Sediment Trap Type A
1630.04	Stilling Basin	1635.02	Rock Pipe Inlet Sediment Trap Type B
1630.05	Temporary Diversion	1640.01	Coir Fiber Baffle
1630.06	Special Stilling Basin	1645.01	Temporary Stream Crossing
1631.01	Matting Installation		

3/14/2018
Division 4 Wayne #40 Environmental\Design\B5920240_rdy_tsh.dgn
bendhenegar

PROJECT REFERENCE NO.	SHEET NO.
17BP.4.R.85	EC-2
R/W SHEET NO.	
ROADWAY DESIGN ENGINEER	HYDRAULICS ENGINEER

TEMPORARY ROCK SILT CHECK TYPE 'A' WITH EXCELSIOR MATTING AND POLYACRYLAMIDE (PAM)

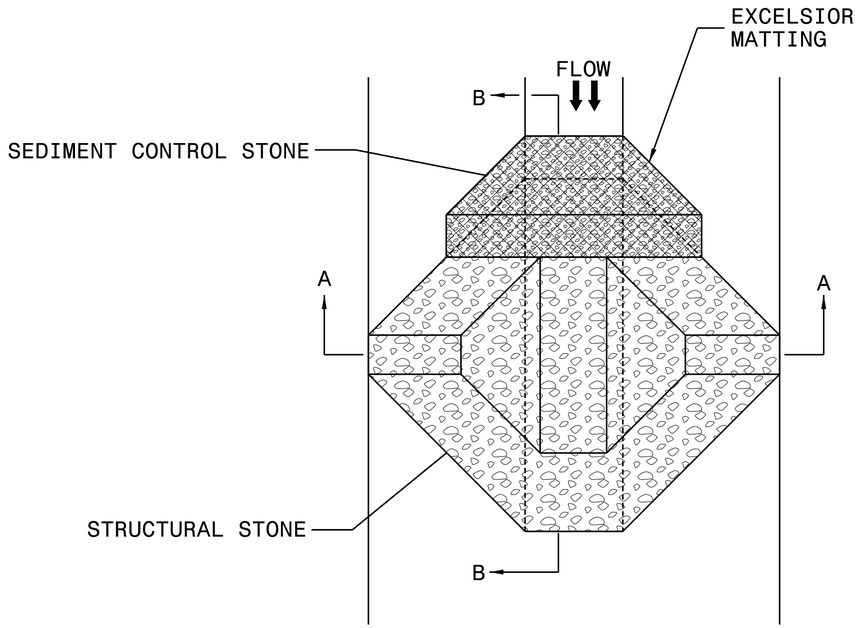

PLAN

NOTES:

INSTALL TEMPORARY ROCK SILT CHECK TYPE A IN ACCORDANCE WITH ROADWAY STANDARD DRAWING NO. 1633.01.

USE EXCELSIOR FOR MATTING MATERIAL AND ANCHOR MATTING SECTION AT TOP AND BOTTOM WITH CLASS B STONE.

PRIOR TO POLYACRYLAMIDE (PAM) APPLICATION, OBTAIN A SOIL SAMPLE FROM PROJECT LOCATION, AND FROM OFFSITE MATERIAL, AND ANALYZE FOR APPROPRIATE PAM FLOCCULANT TO BE APPLIED TO EACH ROCK SILT CHECK.

INITIALLY APPLY 4 OUNCES OF POLYACRYLAMIDE (PAM) TO TOP OF MATTING SECTION AND AFTER EVERY RAINFALL EVENT THAT EQUALS OR EXCEEDS 0.50 INCHES.

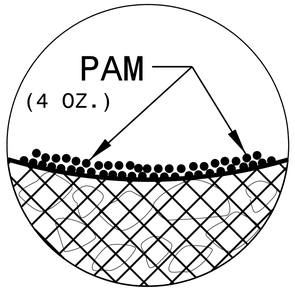

INSET A

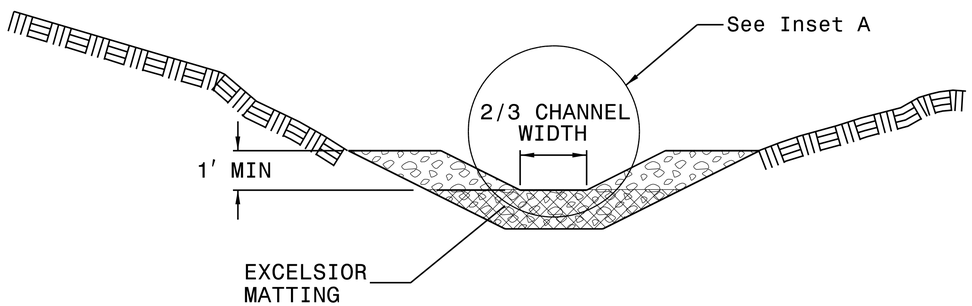

SECTION A-A

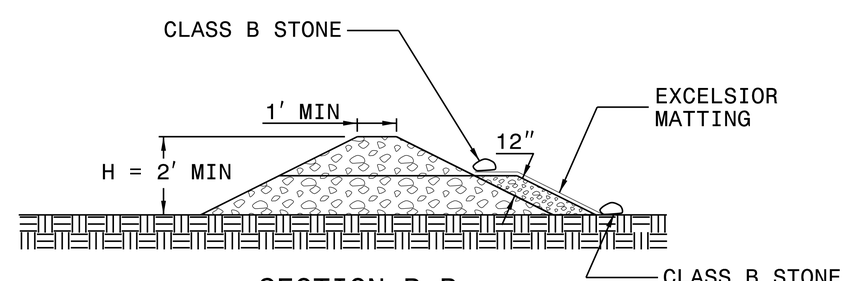

SECTION B-B

NOT TO SCALE

PROJECT REFERENCE NO.	SHEET NO.
17BP.4.R.85	EC-2A
R/W SHEET NO.	
ROADWAY DESIGN ENGINEER	HYDRAULICS ENGINEER

WATTLE BARRIER DETAIL

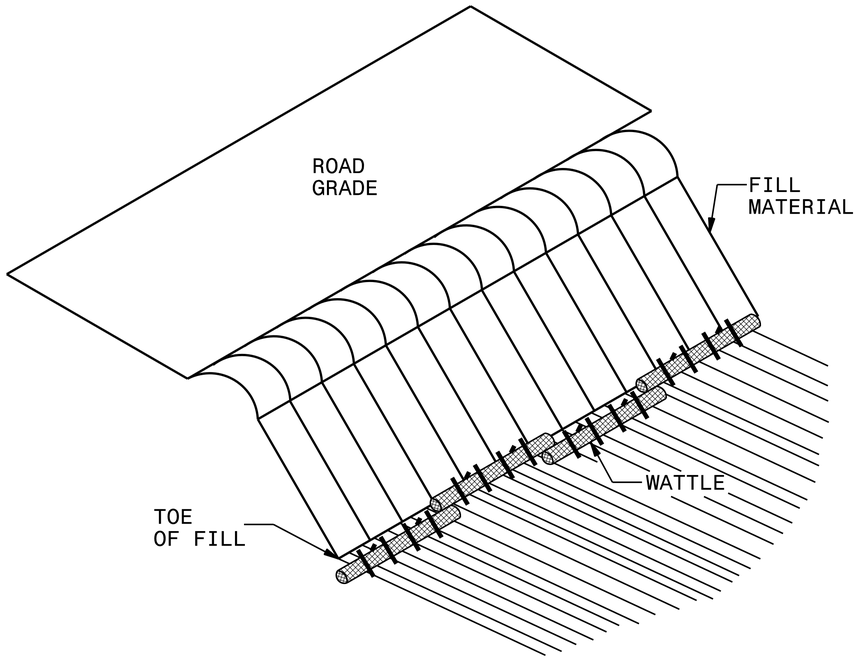

ISOMETRIC VIEW

NOTES:

USE MINIMUM 18 IN. NOMINAL DIAMETER EXCELSIOR WATTLE AND LENGTH OF 10 FT.

EXCAVATE A 2 TO 3 INCH TRENCH FOR WATTLE TO BE PLACED.

DO NOT PLACE WATTLES ON TOE OF SLOPE.

USE 2 FT. WOODEN STAKES WITH A 2 IN. BY 2 IN. NOMINAL CROSS SECTION.

INSTALL A MINIMUM OF 2 UPSLOPE STAKES AND 4 DOWNSLOPE STAKES AT AN ANGLE TO WEDGE WATTLE TO GROUND.

PROVIDE STAPLES MADE OF 0.125 IN. DIAMETER STEEL WIRE FORMED INTO A U SHAPE NOT LESS THAN 12″ IN LENGTH.

INSTALL STAPLES APPROXIMATELY EVERY 1 LINEAR FOOT ON BOTH SIDES OF WATTLE AND AT EACH END TO SECURE IT TO THE SOIL.

FOR BREAKS ALONG LARGE SLOPES, USE MAXIMUM SPACING OF 25 FT.

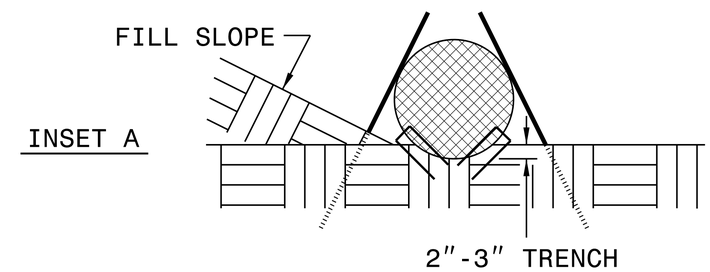

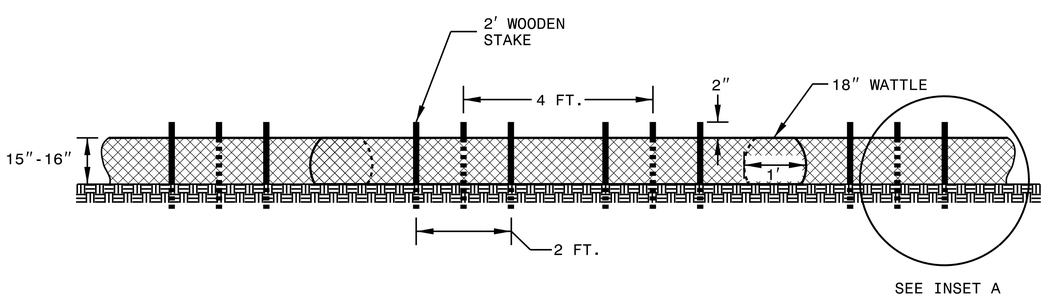

FRONT VIEW

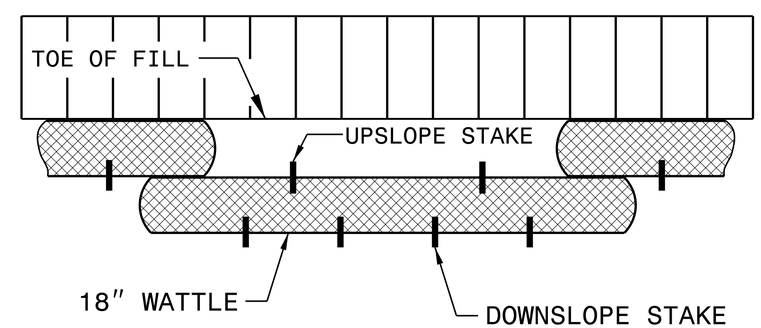

TOP VIEW

PROJECT REFERENCE NO.	SHEET NO.
17BP.4.R.85	EC-3
ROADWAY DESIGN ENGINEER	HYDRAULICS ENGINEER

DIVISION OF HIGHWAYS
STATE OF NORTH CAROLINA

SOIL STABILIZATION TIMEFRAMES

SITE DESCRIPTION	STABILIZATION TIME	TIMEFRAME EXCEPTIONS
PERIMETER DIKES, SWALES, DITCHES AND SLOPES	7 DAYS	NONE
HIGH QUALITY WATER (HQW) ZONES	7 DAYS	NONE
SLOPES STEEPER THAN 3:1	7 DAYS	IF SLOPES ARE 10' OR LESS IN LENGTH AND ARE NOT STEEPER THAN 2:1, 14 DAYS ARE ALLOWED.
SLOPES 3:1 OR FLATTER	14 DAYS	7 DAYS FOR SLOPES GREATER THAN 50' IN LENGTH.
ALL OTHER AREAS WITH SLOPES FLATTER THAN 4:1	14 DAYS	NONE, EXCEPT FOR PERIMETERS AND HQW ZONES.

MATTING FOR EROSION CONTROL

CONST SHEET NO.	LINE	FROM STATION	TO STATION	SIDE	ESTIMATE (SY)
4	L DITCH	13+00	13+65	LT	95
				SUBTOTAL	95
MISCELLANEOUS MATTING TO BE INSTALLED AS DIRECTED BY THE ENGINEER					1430
				TOTAL	1525
				SAY	1525

PROJECT REFERENCE NO.	SHEET NO.
17BP.4.R.85	EC-4
R/W SHEET NO.	4
ROADWAY DESIGN ENGINEER	HYDRAULICS ENGINEER

TGS ENGINEERS
706 HILLSBOROUGH ST. SUITE 200
RALEIGH, NC 27603
PH (919) 773-8887
CORP. LICENSE NO.: C-0275

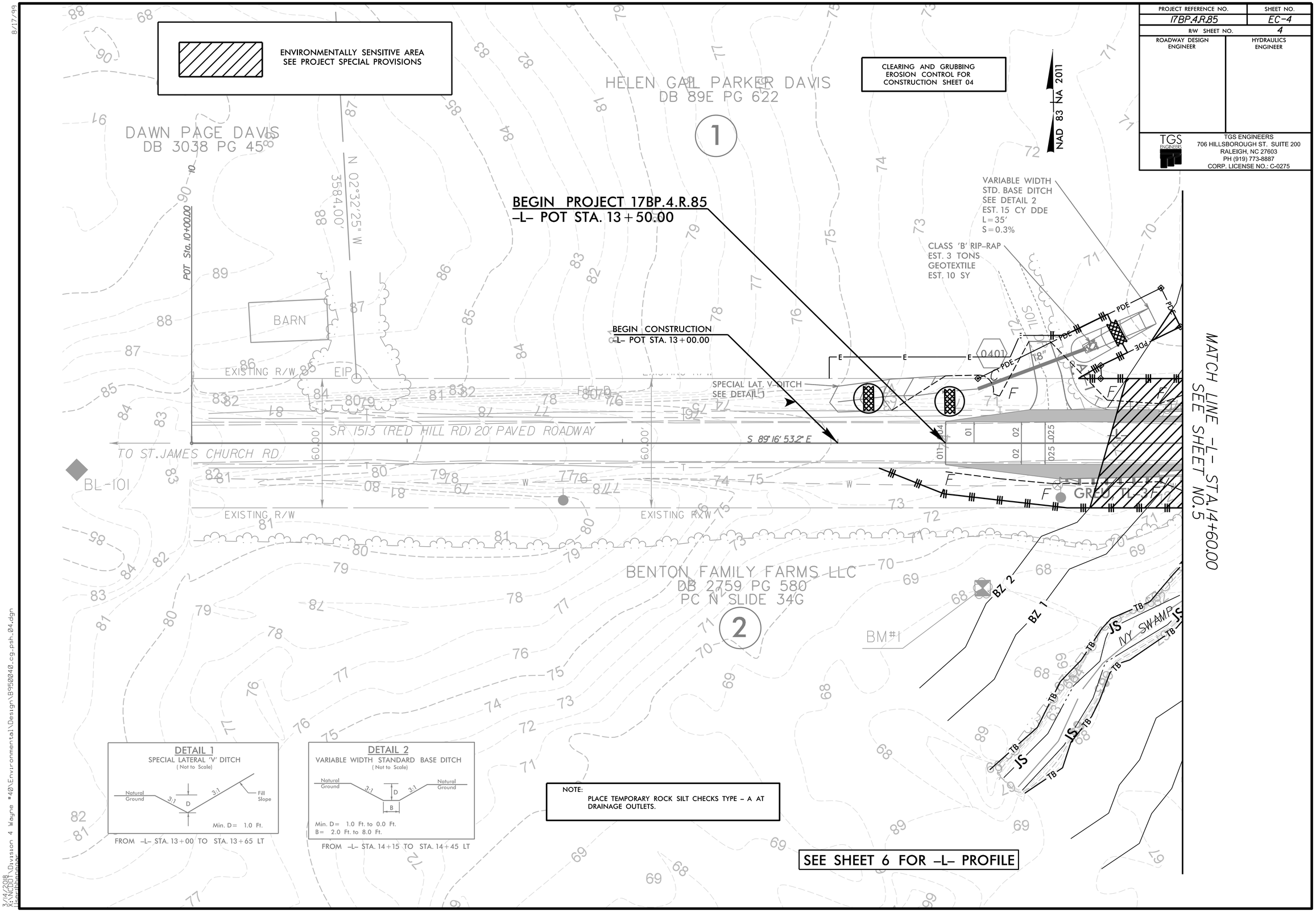

8/17/99

3/14/2018
X:\NCDOT\Division 4 Wayne #40\Environmental\Design\B950040_cg_psh_04.dgn

PROJECT REFERENCE NO.	SHEET NO.
17BP.4.R.85	EC-5
R/W SHEET NO.	5
ROADWAY DESIGN ENGINEER	HYDRAULICS ENGINEER

TGS ENGINEERS
706 HILLSBOROUGH ST. SUITE 200
RALEIGH, NC 27603
PH (919) 773-8887
CORP. LICENSE NO.: C-0275

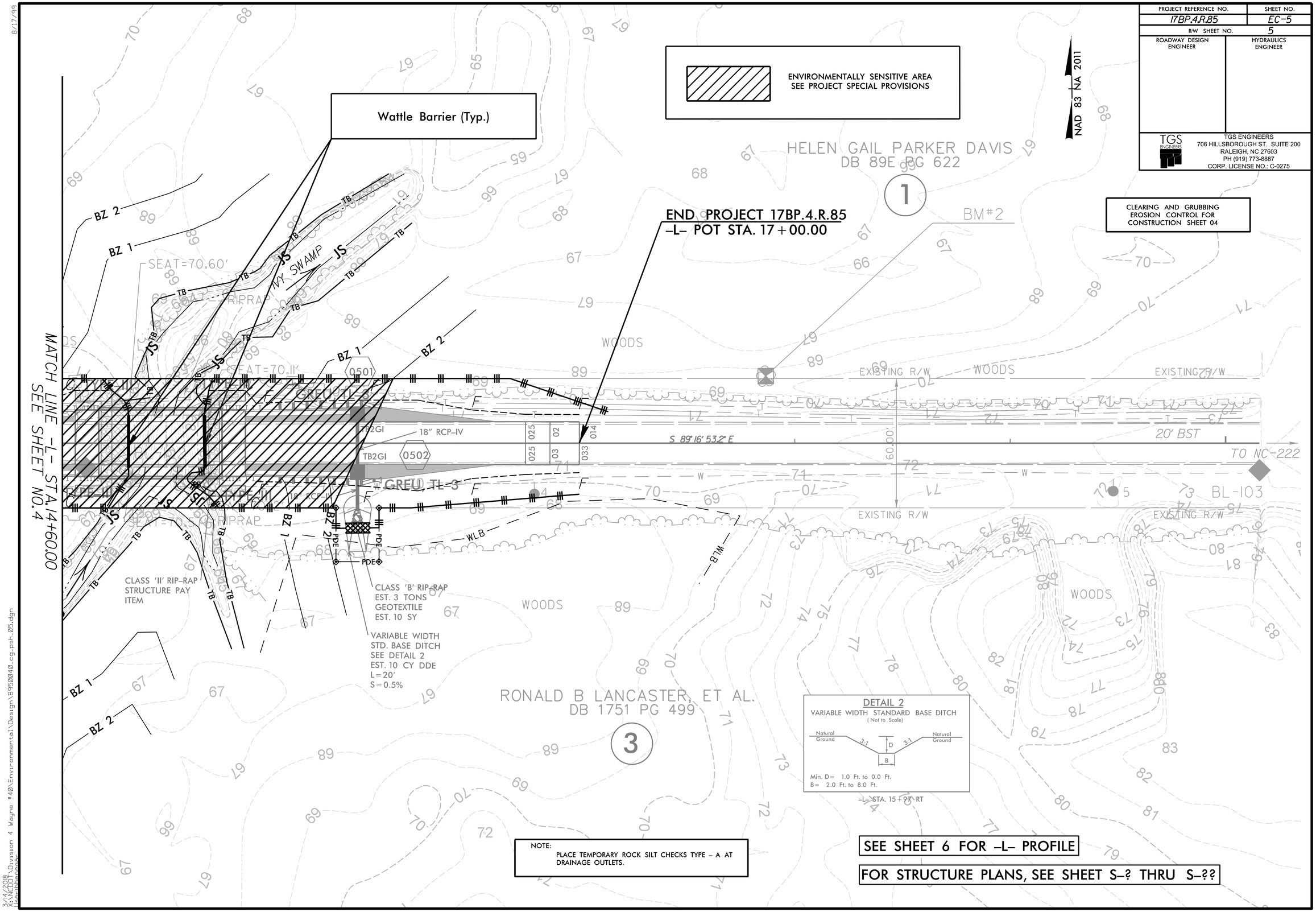

8/17/99

3/14/2018
X:\NCDOT\Division 4 Wayne #40\Environmental\Design\B950040_cg_psh_05.dgn
kerchberger

PROJECT REFERENCE NO.	SHEET NO.
17BP.4.R.85	EC-6
R/W SHEET NO.	4
ROADWAY DESIGN ENGINEER	HYDRAULICS ENGINEER

TGS ENGINEERS
706 HILLSBOROUGH ST. SUITE 200
RALEIGH, NC 27603
PH (919) 773-8887
CORP. LICENSE NO.: C-0275

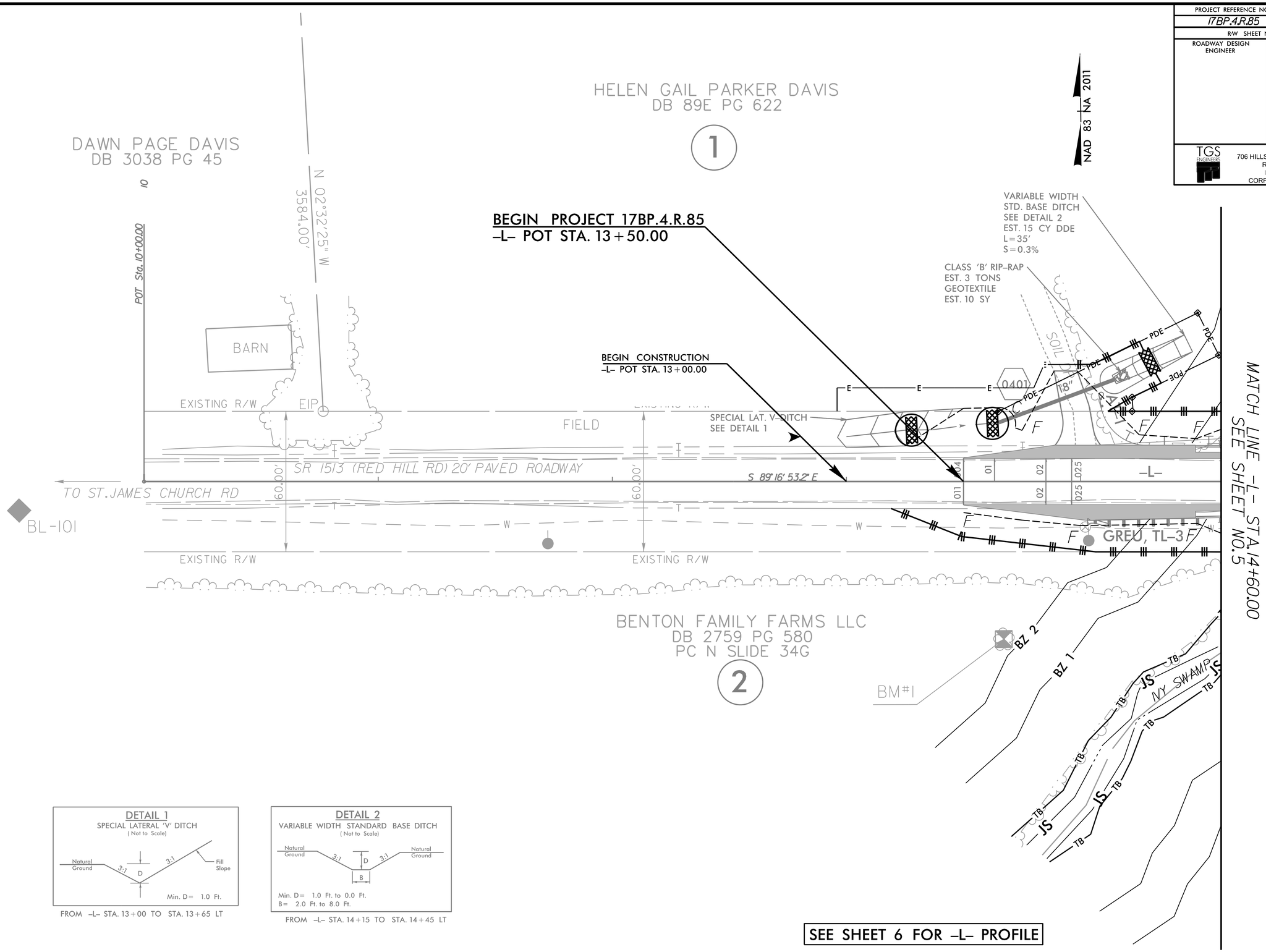

DETAIL 1
SPECIAL LATERAL 'V' DITCH
(Not to Scale)

FROM -L- STA. 13+00 TO STA. 13+65 LT

DETAIL 2
VARIABLE WIDTH STANDARD BASE DITCH
(Not to Scale)

FROM -L- STA. 14+15 TO STA. 14+45 LT

SEE SHEET 6 FOR -L- PROFILE

8/17/99

3/14/2018
X:\NCDOT\Division 4 Wayne #40\Environmental\Design\B950040_ec_psh_04.dgn

PROJECT REFERENCE NO.	SHEET NO.
17BP.4.R.85	EC-7
R/W SHEET NO. 5	
ROADWAY DESIGN ENGINEER	HYDRAULICS ENGINEER

TGS ENGINEERS
706 HILLSBOROUGH ST. SUITE 200
RALEIGH, NC 27603
PH (919) 773-8887
CORP. LICENSE NO.: C-0275

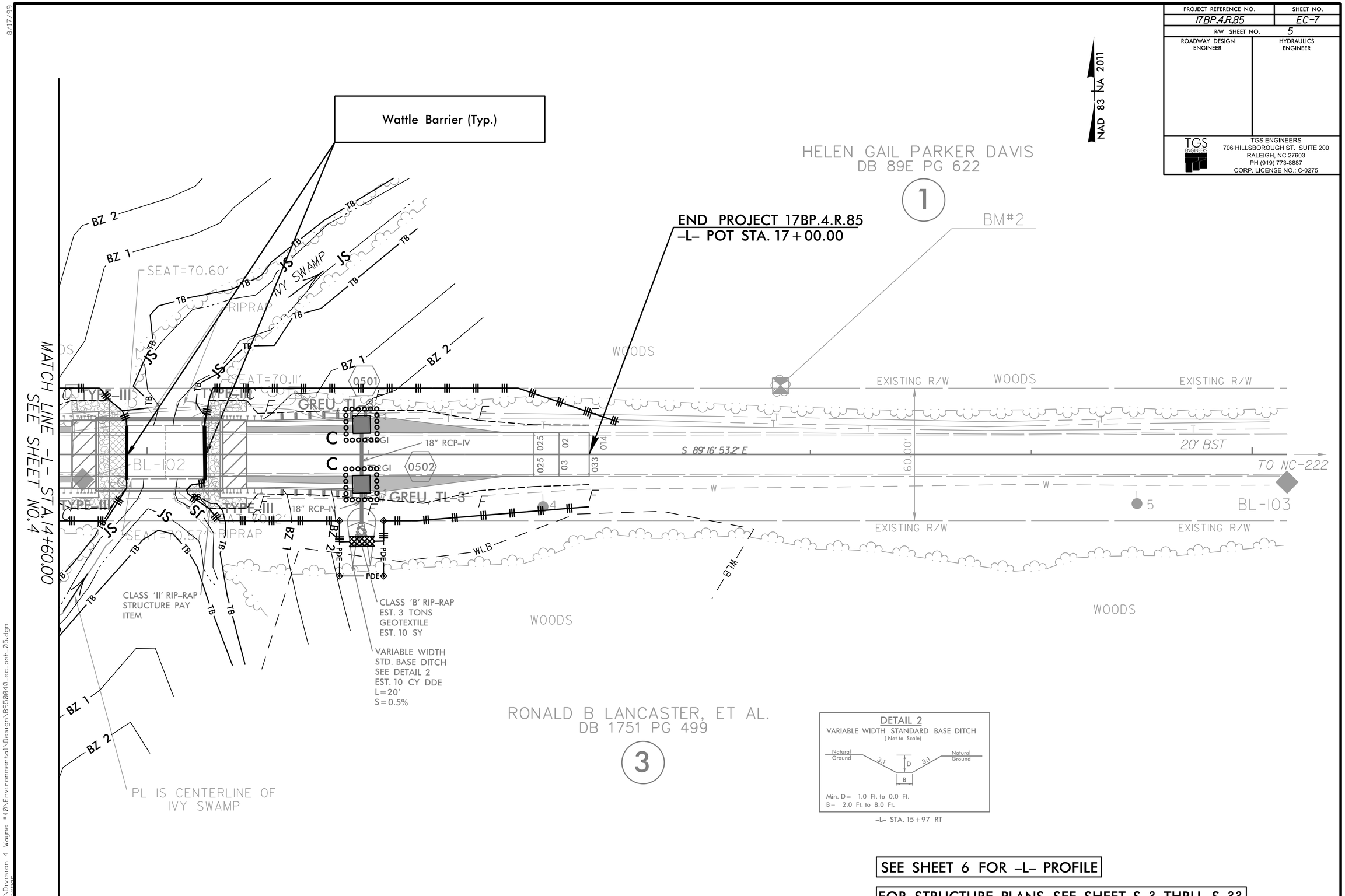

DETAIL 2
VARIABLE WIDTH STANDARD BASE DITCH
(Not to Scale)

Min. D= 1.0 Ft. to 0.0 Ft.
B= 2.0 Ft. to 8.0 Ft.

-L- STA. 15+97 RT

SEE SHEET 6 FOR -L- PROFILE

FOR STRUCTURE PLANS, SEE SHEET S-? THRU S-??

8/17/99
3/14/2018
X:\NCDOT\Division 4 Wayne #40\Environmental\Design\B950040_ec_psh_05.dgn
Bernhardt

STATE	STATE PROJECT REFERENCE NO.	SHEET NO.	TOTAL SHEETS
N.C.	17BP.4.R.85	RF-1	
STATE PROJ. NO.	F.A. PROJ. NO.	DESCRIPTION	

PRELIMINARY PLANS
DO NOT USE FOR CONSTRUCTION

PLANTING DETAILS

SEEDLING / LINER BAREROOT PLANTING DETAIL

HEALING IN

1. Locate a healing-in site in a shady, well protected area.
2. Excavate a flat bottom trench 12 inches deep and provide drainage.

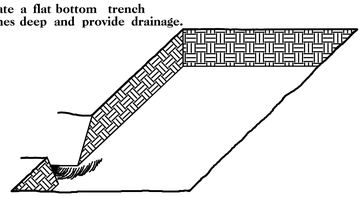

3. Backfill the trench with 2 inches well rotted sawdust. Place a 2 inch layer of well rotted sawdust at a sloping angle at one end of the trench.

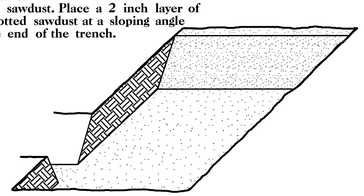

4. Place a single layer of plants against the sloping end so that the root collar is at ground level.

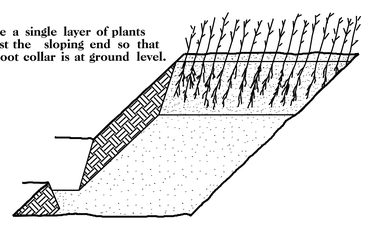

5. Place a 2 inch layer of well rotted sawdust over the roots maintaining a sloping angle.

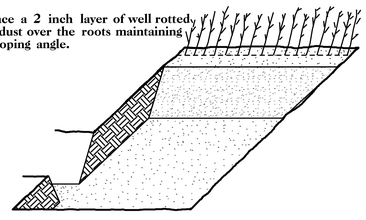

6. Repeat layers of plants and sawdust as necessary and water thoroughly.

DIBBLE PLANTING METHOD
USING THE KBC PLANTING BAR

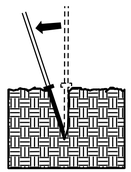

1. Insert planting bar as shown and pull handle toward planter.

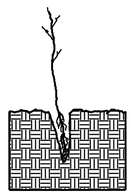

2. Remove planting bar and place seedling at correct depth.

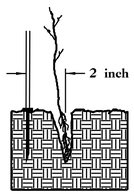

3. Insert planting bar 2 inches toward planter from seedling.

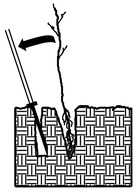

4. Pull handle of bar toward planter, firming soil at bottom.

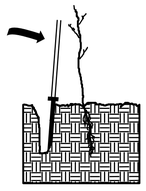

5. Push handle forward firming soil at top.

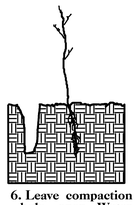

6. Leave compaction hole open. Water thoroughly.

PLANTING NOTES:

PLANTING BAG
During planting, seedlings shall be kept in a moist canvas bag or similar container to prevent the root systems from drying.

KBC PLANTING BAR
Planting bar shall have a blade with a triangular cross section, and shall be 12 inches long, 4 inches wide and 1 inch thick at center.

ROOT PRUNING
All seedlings shall be root pruned, if necessary, so that no roots extend more than 10 inches below the root collar.

REFORESTATION

☐ TREE REFORESTATION SHALL BE PLANTED 6 FT. TO 10 FT. ON CENTER, RANDOM SPACING, AVERAGING 8 FT. ON CENTER, APPROXIMATELY 680 PLANTS PER ACRE.

REFORESTATION

MIXTURE, TYPE, SIZE, AND FURNISH SHALL CONFORM TO THE FOLLOWING:

25%	LIRIODENDRON TULIPIFERA	TULIP POPLAR	12 in – 18 in BR
25%	PLATANUS OCCIDENTALIS	AMERICAN SYCAMORE	12 in – 18 in BR
25%	FRAXINUS PENNSYLVANICA	GREEN ASH	12 in – 18 in BR
25%	BETULA NIGRA	RIVER BIRCH	12 in – 18 in BR

REFORESTATION DETAIL SHEET

N.C.D.O.T. - ROADSIDE ENVIRONMENTAL UNIT

T.I.P. NO.	SHEET NO.
17BP.4.R.85	UO–1

NOTE:
ALL PROPOSED UTILITY WORK SHOWN ON THIS SHEET WILL BE DONE BY OTHERS.
NO PAYMENT WILL BE MADE TO THE CONTRACTOR FOR PROPOSED UTILITY WORK SHOWN ON THIS SHEET.

STATE OF NORTH CAROLINA
DIVISION OF HIGHWAYS

UTILITIES BY OTHERS PLANS
WAYNE COUNTY

LOCATION: BRIDGE NO. 40 ON SR 1513 (RED HILL ROAD) OVER IVY SWAMP

TYPE OF WORK: POWER, WATER & COMMUNICATION

NAD 83 NA 2011

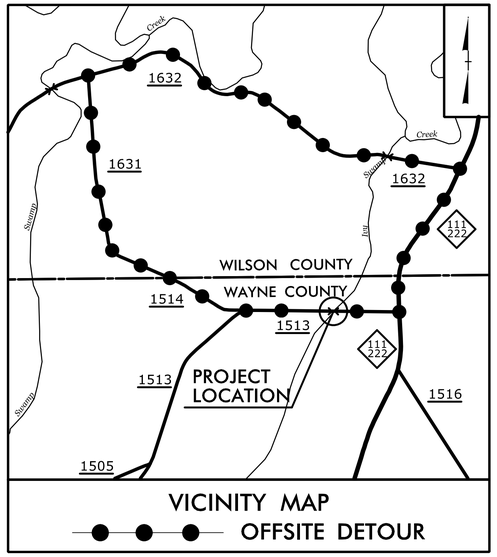

UO–3

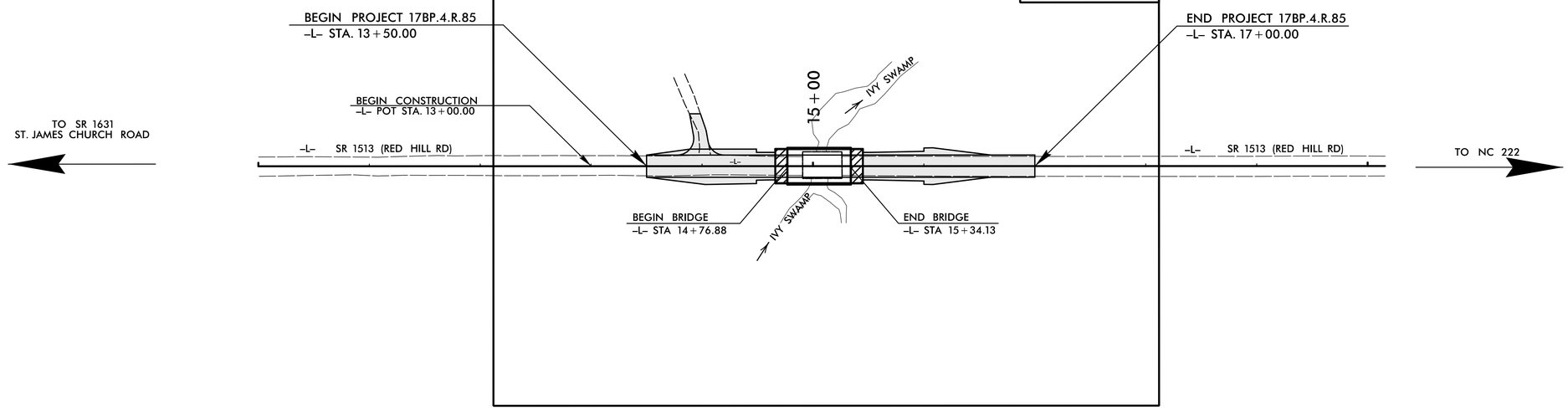

GRAPHIC SCALES

20 10 0 20 40
PLANS

INDEX OF SHEETS

SHEET NO.:	DESCRIPTION:
UO–1	TITLE SHEET
UO–2	UBO SYMBOLOGY SHEET
UO–3	UBO PLAN SHEET

UTILITY OWNERS WITH CONFLICTS

(A) POWER – STANTONSBURG POWER
(B) WATER – WAYNE COUNTY WATER
(C) COMMUNICATION – CENTURYLINK

PREPARED IN THE OFFICE OF:

TGS ENGINEERS
706 HILLSBOROUGH ST. SUITE 200
RALEIGH, NC 27603
PH (919) 773-8887
CORP. LICENSE NO.: C-0275

UTILITY PROJECT MANAGER
PROJECT UTILITY COORDINATOR
PROJECT UTILITY XXXX

DIVISION OF HIGHWAYS
UTILITIES UNIT
1555 MAIL SERVICES CENTER
RALEIGH NC 27699–1555
PHONE (919) 707–6690
FAX (919) 250–4151

UTILITIES REGIONAL ENGINEER
DAVID BEAMAN — DIV. UTILITIES COORDINATOR
UTILITIES AREA COORDINATOR
UTILITIES COORDINATOR

TIP PROJECT: 17BP.4.R.85

09/08/99
5/1/2018
X:\NCDOT\Division 4 Wayne #40\Utilities\Coordination\Utility_Relocations\Relocation_Plans\B950040_UBO_1.dgn
User:bevans

PROJECT REFERENCE NO.	SHEET NO.
17BP.4.R.85	U0-2

STATE OF NORTH CAROLINA
DIVISION OF HIGHWAYS

UTILITIES PLAN SHEET SYMBOLS

PROPOSED WATER SYMBOLS

- Water Line (Sized as Shown) — 12" WL
- 11¼ Degree Bend
- 22½ Degree Bend
- 45 Degree Bend
- 90 Degree Bend
- Plug
- Tee
- Cross
- Reducer
- Gate Valve — GV
- Butterfly Valve — BV
- Tapping Valve — TGV
- Line Stop — LS
- Line Stop with Bypass — LS/BP
- Blow Off — BO
- Fire Hydrant — PFH
- Relocate Fire Hydrant — RFH
- Remove Fire Hydrant — REM FH
- Water Meter — PWM
- Relocate Water Meter — RWM
- Remove Water Meter — REM WM
- Water Pump Station — PS(W)
- RPZ Backflow Preventer — PRPZ
- DCV Backflow Preventer — PBFP
- Relocate RPZ Backflow Preventer — RRPZ
- Relocate DCV Backflow Preventer — RBFP

PROPOSED SEWER SYMBOLS

- Gravity Sewer Line (Sized as Shown) — 12" SS
- Force Main Sewer Line (Sized as Shown) — 12" FSS
- Manhole (Sized per Note)
- Sewer Pump Station — PS(SS)

PROPOSED MISCELLANOUS UTILITIES SYMBOLS

- Power Pole
- Telephone Pole
- Joint Use Pole
- Telephone Pedestal — TEL PED
- Utility Line by Others (Type as Shown) — PROP O/H POW LINES
- Trenchless Installation — 12" TL INSTALL
- Encasement by Open Cut — 24" ENCAS BY OC
- Encasement — 24" ENCASEMENT
- Thrust Block
- Air Release Valve — AR
- Utility Vault — UV
- Concrete Pier — CP
- Steel Pier — SP
- Plan Note — NOTE
- Pay Item Note — PAY ITEM

EXISTING UTILITIES SYMBOLS

- Power Pole
- Telephone Pole
- Joint Use Pole
- Utility Pole
- Utility Pole with Base
- H-Frame Pole
- Power Transmission Line Tower
- Water Manhole
- Power Manhole
- Telephone Manhole
- Sanitary Sewer Manhole
- Hand Hole for Cable
- Power Transformer
- Telephone Pedestal
- CATV Pedestal
- Gas Valve
- Gas Meter
- Located Miscellaneous Utility Object
- Abandoned According to Utility Records — AATUR
- End of Information — E.O.I.
- *Underground Power Line
- *Underground Telephone Cable
- *Underground Telephone Conduit
- *Underground Fiber Optics Telephone Cable
- *Underground TV Cable
- *Underground Fiber Optics TV Cable
- *Underground Gas Pipeline
- Aboveground Gas Pipeline — A/G Gas
- *Underground Water Line
- Aboveground Water Line — A/G Water
- *Underground Gravity Sanitary Sewer Line — SS
- Aboveground Gravity Sanitary Sewer Line — A/G Sanitary Sewer
- *Underground SS Forced Main Line
- Underground Unknown Utility Line
- SUE Test Hole
- Water Meter
- Water Valve
- Fire Hydrant
- Sanitary Sewer Cleanout

*For Existing Utilities

- Utility Line Drawn from Record (Type as Shown)
- Designated Utility Line (Type as Shown)

REV: 2/1/2012

5/14/99
5/8/2018
R:\Utilities\Coordination\Utility_Relocations\Relocation_Plans\B950040_UB0_2.dgn
jbergbowne

PROJECT REFERENCE NO.	SHEET NO.
17BP.4.R.85	U0-3

UTILITIES BY OTHERS

ALL PROPOSED UTILITY WORK SHOWN ON THIS SHEET WILL BE DONE BY OTHERS. NO PAYMENT WILL BE MADE TO THE CONTRACTOR FOR PROPOSED UTILITY WORK SHOWN ON THIS SHEET.

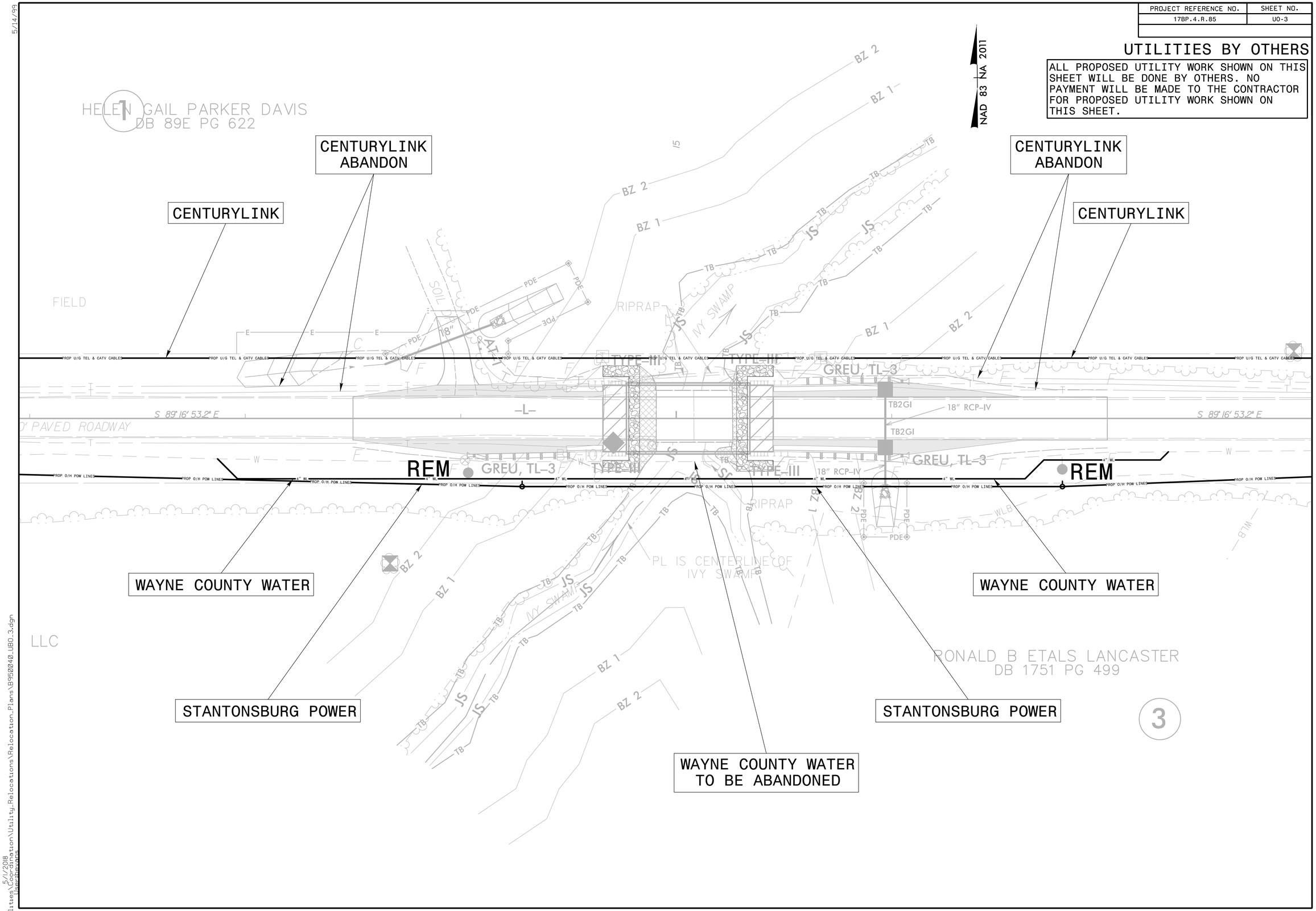

5/14/99

5/1/2018
jsperkins

PROJ. REFERENCE NO.	SHEET NO.
17BP.4.R.85	X-1A

STATE OF NORTH CAROLINA
DIVISION OF HIGHWAYS

NOTE: EMBANKMENT COLUMN DOES NOT INCLUDE BACKFILL FOR UNDERCUT

CROSS-SECTION SUMMARY

Station L	Uncl. Exc. (cu. yd.)	Embt (cu. yd.)
13+00.00	0	0
13+25.00	6	1
13+75.00	13	6
14+00.00	6	4
14+25.00	6	2
14+50.00	11	0
14+75.00	13	0

Approximate quantities only. Unclassified excavation, borrow excavation, shoulder borrow, fine grading, clearing and grubbing, and removal of existing pavement will be paid for at the lump sum price for "Grading".

Station L	Uncl. Exc. (cu. yd.)	Embt (cu. yd.)
SKIP STATION RANGE = 14+76.88 to 15+34.13		
15+50.00	0	0
15+75.00	6	0
16+00.00	4	1
16+25.00	2	4
16+50.00	2	4
16+75.00	2	1
17+00.00	2	0

0 5 10	PROJ. REFERENCE NO.	SHEET NO.
	17BP.4.R.85	X-1

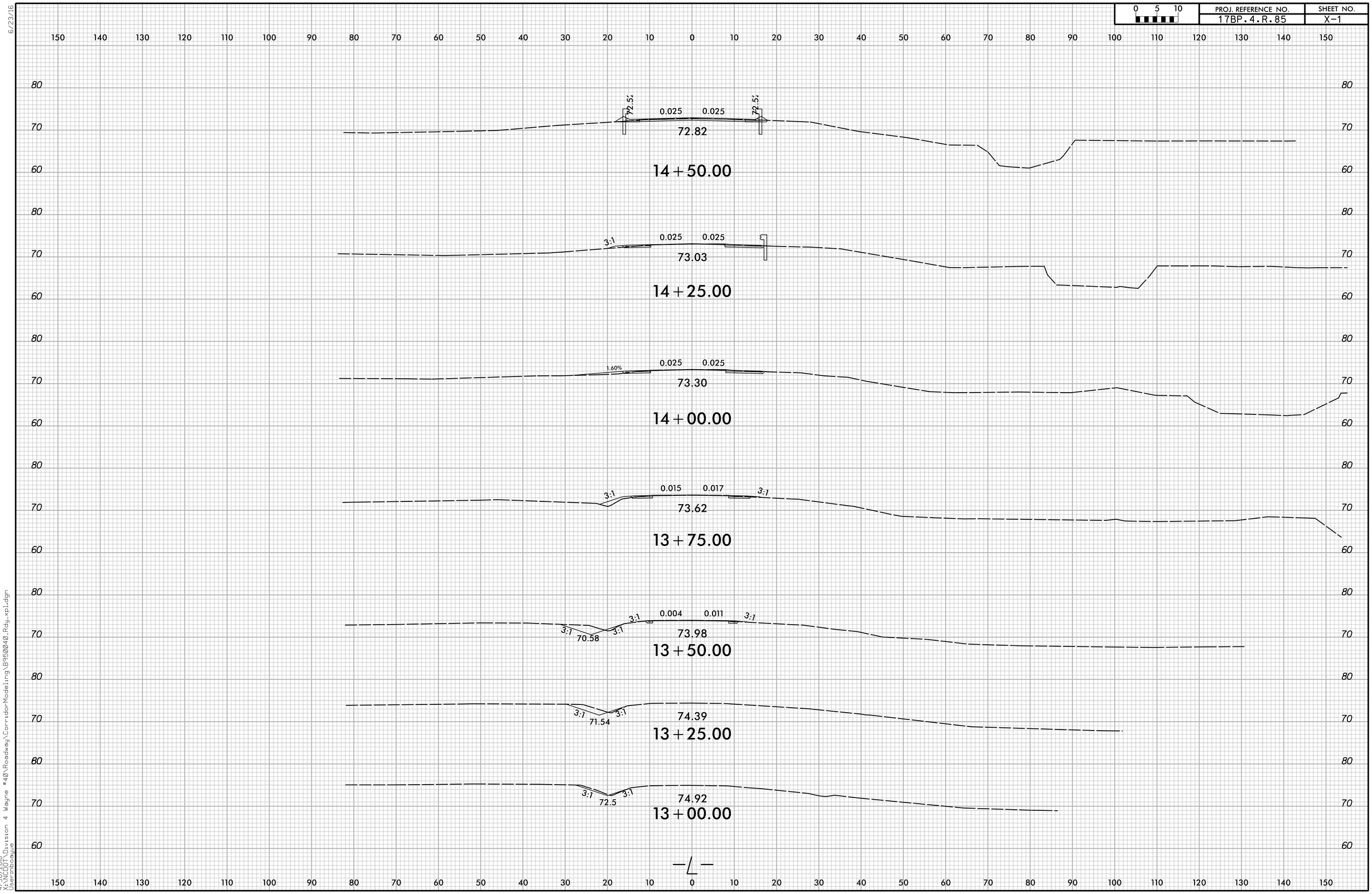

6/23/16

4/30/2018
X:\INDOT\Division 4 Wayne #40\Roadway\CorridorModeling\B950040_Rdy_xpl.dgn
User:nbaque

0 5 10	PROJ. REFERENCE NO.	SHEET NO.
	17BP.4.R.85	X-2

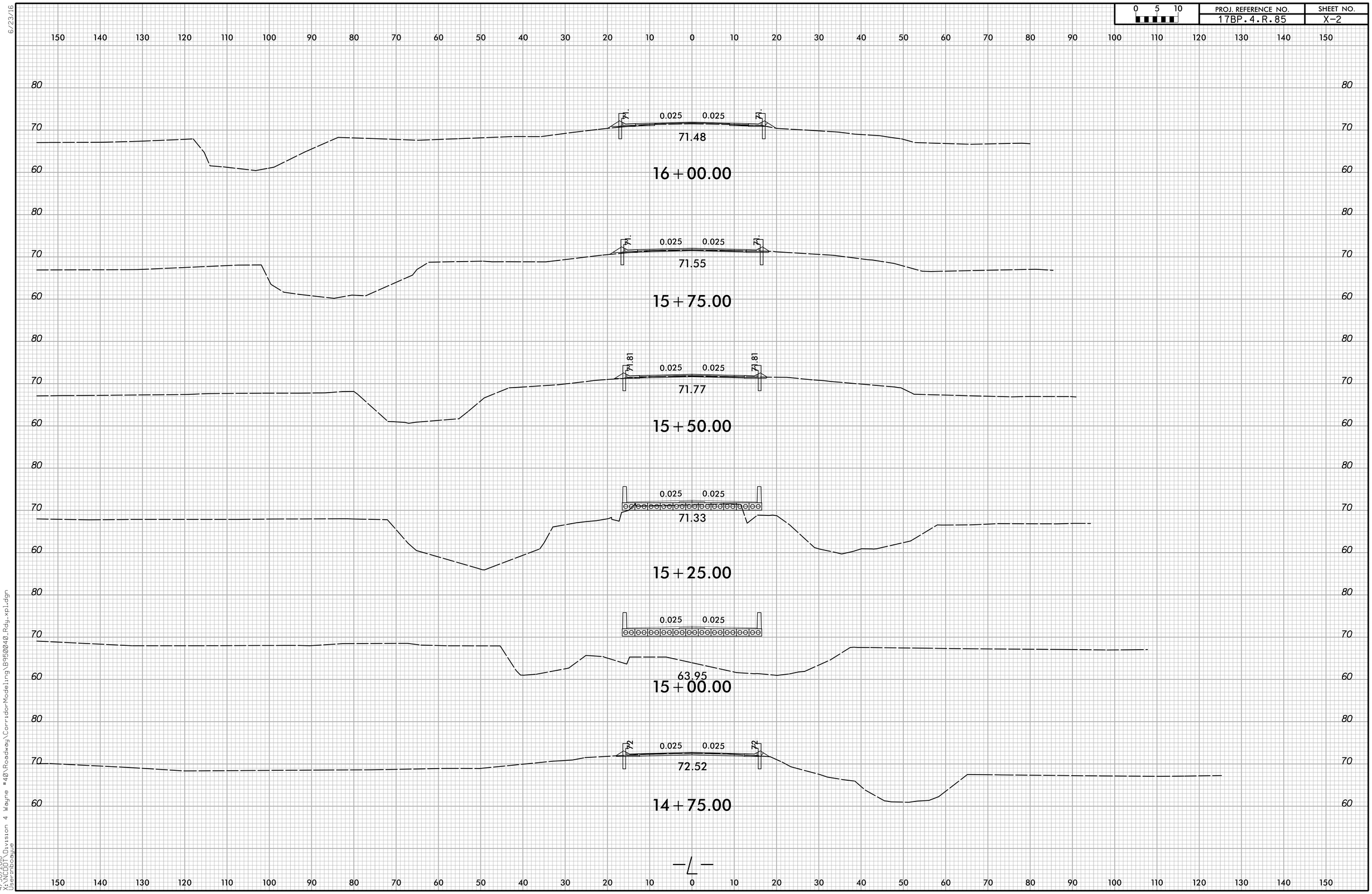

6/23/16

4/30/2018
X:\INDOT\Division 4 Wayne #40\Roadway\CorridorModeling\B950040_Rdy_xpl.dgn
User:nbaque

0 5 10	PROJ. REFERENCE NO.	SHEET NO.
	17BP.4.R.85	X-3

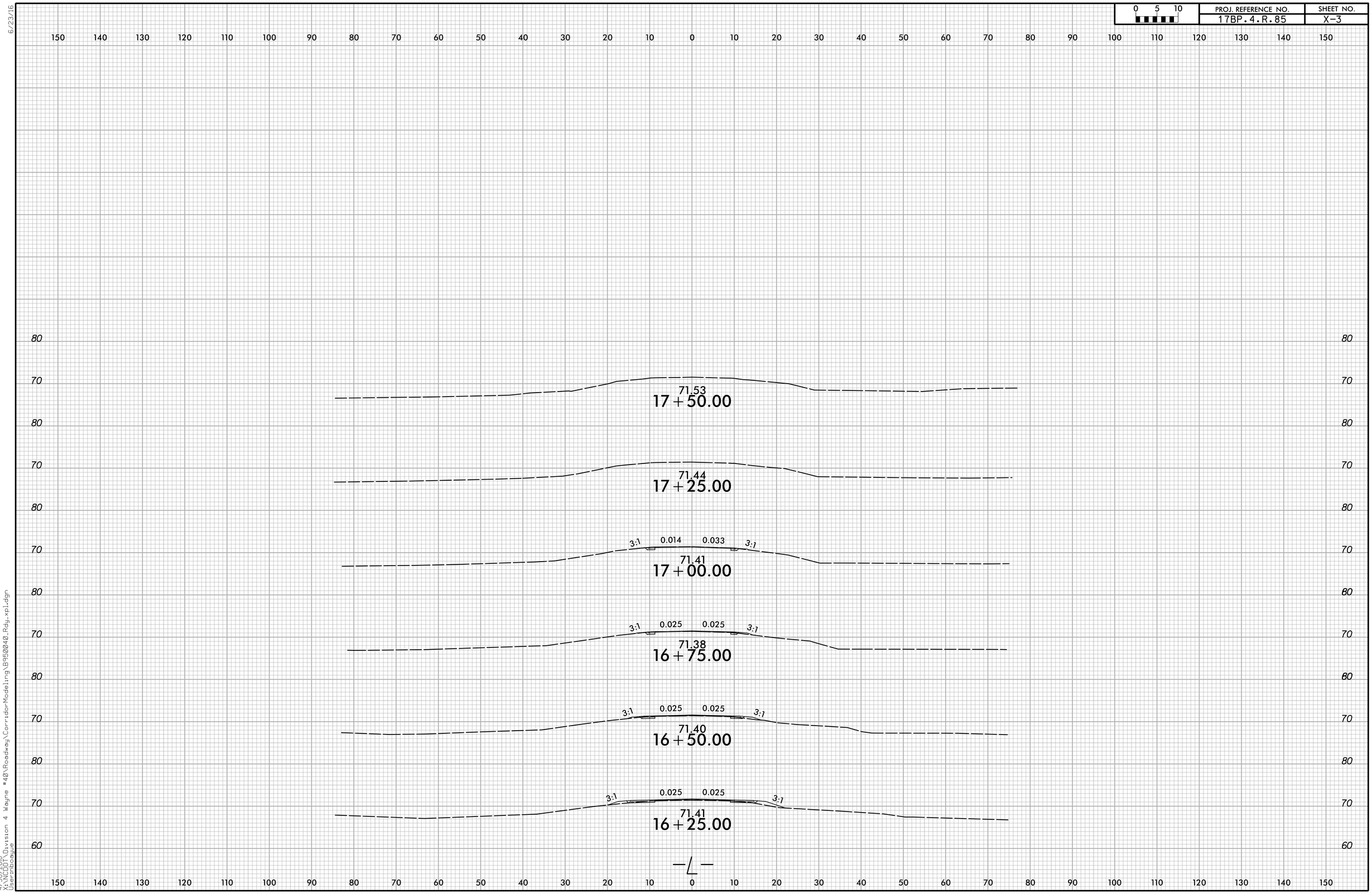

6/23/16

4/30/2018
X:\NCDOT\Division 4 Wayne #40\Roadway\CorridorModeling\B950040_Rdy_xpl.dgn
User:bbaque

09/08/99

PROJECT: 17BP.4.R.85

CONTRACT: DD00250

STRUCTURE

STATE OF NORTH CAROLINA
DIVISION OF HIGHWAYS

WAYNE COUNTY

STATE	STATE PROJECT REFERENCE NO.	SHEET NO.	TOTAL SHEETS
N.C.	17BP.4.R.85		

STATE PROJ. NO.	F.A. PROJ. NO.	DESCRIPTION
17BP.4.R.85	N/A	PE
17BP.4.R.85	N/A	R/W, UTIL
17BP.4.R.85	N/A	CONSTRUCTION

LOCATION: BRIDGE NO. 40 ON SR 1513 (RED HILL ROAD) OVER IVY SWAMP

TYPE OF WORK: GRADING, DRAINAGE, PAVING, AND STRUCTURE

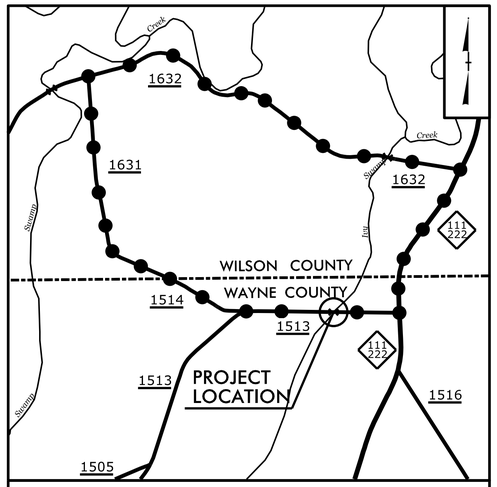

VICINITY MAP
OFFSITE DETOUR

NAD 83 NA 2011

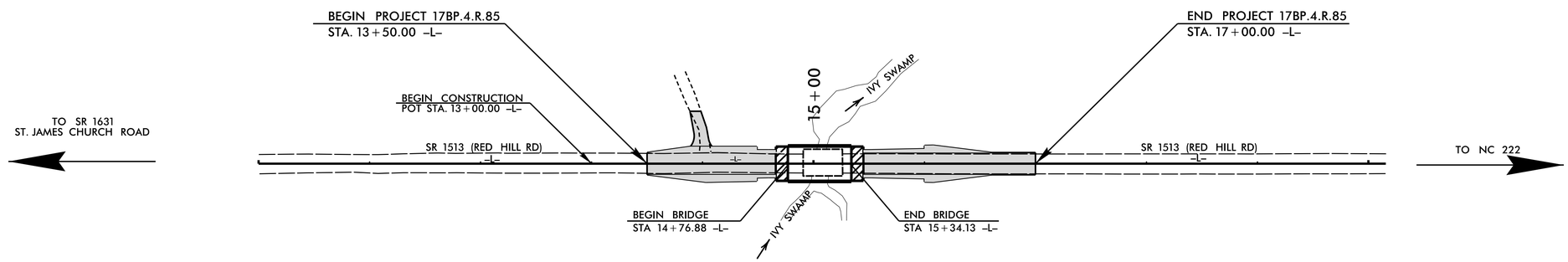

DOCUMENT NOT CONSIDERED FINAL UNLESS ALL SIGNATURES COMPLETED

STATE OF NORTH CAROLINA DEPARTMENT OF TRANSPORTATION

DESIGN DATA

ADT 2016 = 280
T = 6 %
V = 60 MPH

FUNC CLASS =
LOCAL-RURAL
SUBREGIONAL TIER

PROJECT LENGTH

LENGTH ROADWAY PROJECT 17BP.4.R.85	=	*0.055 mile*
LENGTH STRUCTURES PROJECT 17BP.4.R.85	=	*0.011 mile*
TOTAL LENGTH PROJECT 17BP.4.R.85	=	*0.066 mile*

PLANS PREPARED BY:

TGS ENGINEERS
TGS ENGINEERS
706 HILLSBOROUGH ST
SUITE 200
RALEIGH, NC 27603

2018 STANDARD SPECIFICATIONS

LETTING DATE:
MAY 22, 2018

PLANS PREPARED BY:

NCDOT DIVISION 4

MARC CHEEK, PE
STRUCTURES DESIGN ENGINEER

STRUCTURES DESIGN ENGINEER

NORTH CAROLINA PROFESSIONAL SEAL 020125 ENGINEER MARSHALL G. CHEEK, JR.

DocuSigned by: Marshall G. Cheek, Jr.
5FBCC2F3A4DC413...

4/2/2018

STATE OF NORTH CAROLINA DEPARTMENT OF TRANSPORTATION

3/22/2018
X:\NCDOT\Division 4 Wayne #40\Structures\90%\DGN\S-00_Wayne 0040_Tsh.dgn
User:tennis

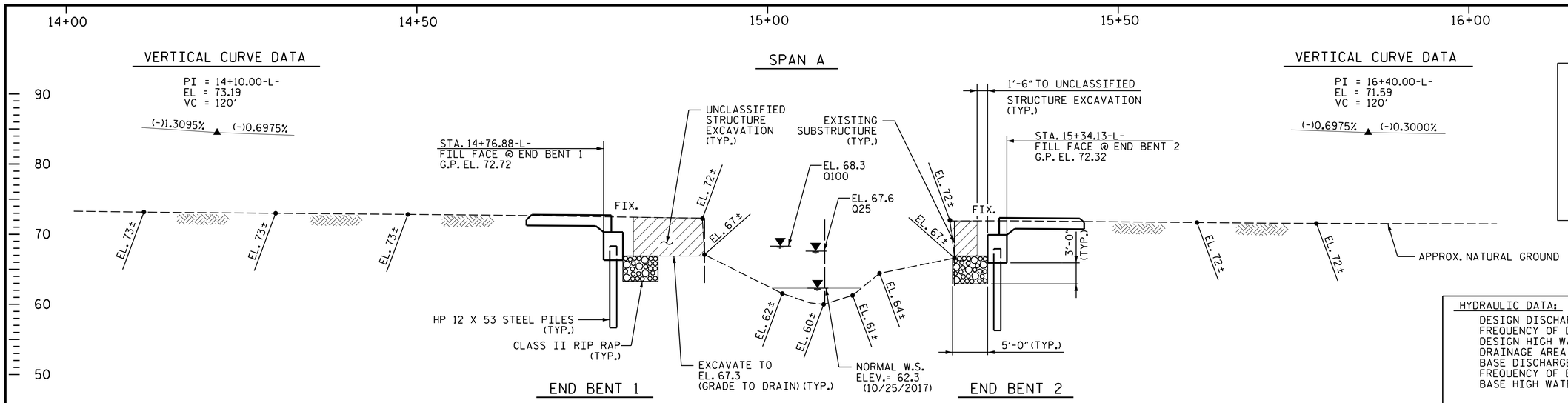

SECTION ALONG -L-

I HEREBY CERTIFY THESE PLANS ARE THE AS-BUILT PLANS.

SEAL

HYDRAULIC DATA:	
DESIGN DISCHARGE	440 CFS
FREQUENCY OF DESIGN DISCHARGE	25 YRS.
DESIGN HIGH WATER ELEVATION	67.6
DRAINAGE AREA	2.60 SQ. MI.
BASE DISCHARGE	650 CFS
FREQUENCY OF BASE DISCHARGE	100 YRS.
BASE HIGH WATER ELEVATION	68.3
OVERTOPPING FLOOD DATA:	
OVERTOPPING DISCHARGE	-- CFS *
FREQUENCY OF OVERTOPPING FLOOD	>500(+) YRS.
OVERTOPPING FLOOD ELEVATION	71.4 **

* OVERTOPPING EXCEEDS 500 YR. FLOOD EVENT

** OVERTOPPING ELEVATION REPRESENTS LOWEST HIGH POINT ON DECK/ROADWAY WHICH OCCURS AT EXISTING SAG @ STA. 17+00-L-

LOW CHORD ELEVATION	
EB1 70.34	EB2 69.97

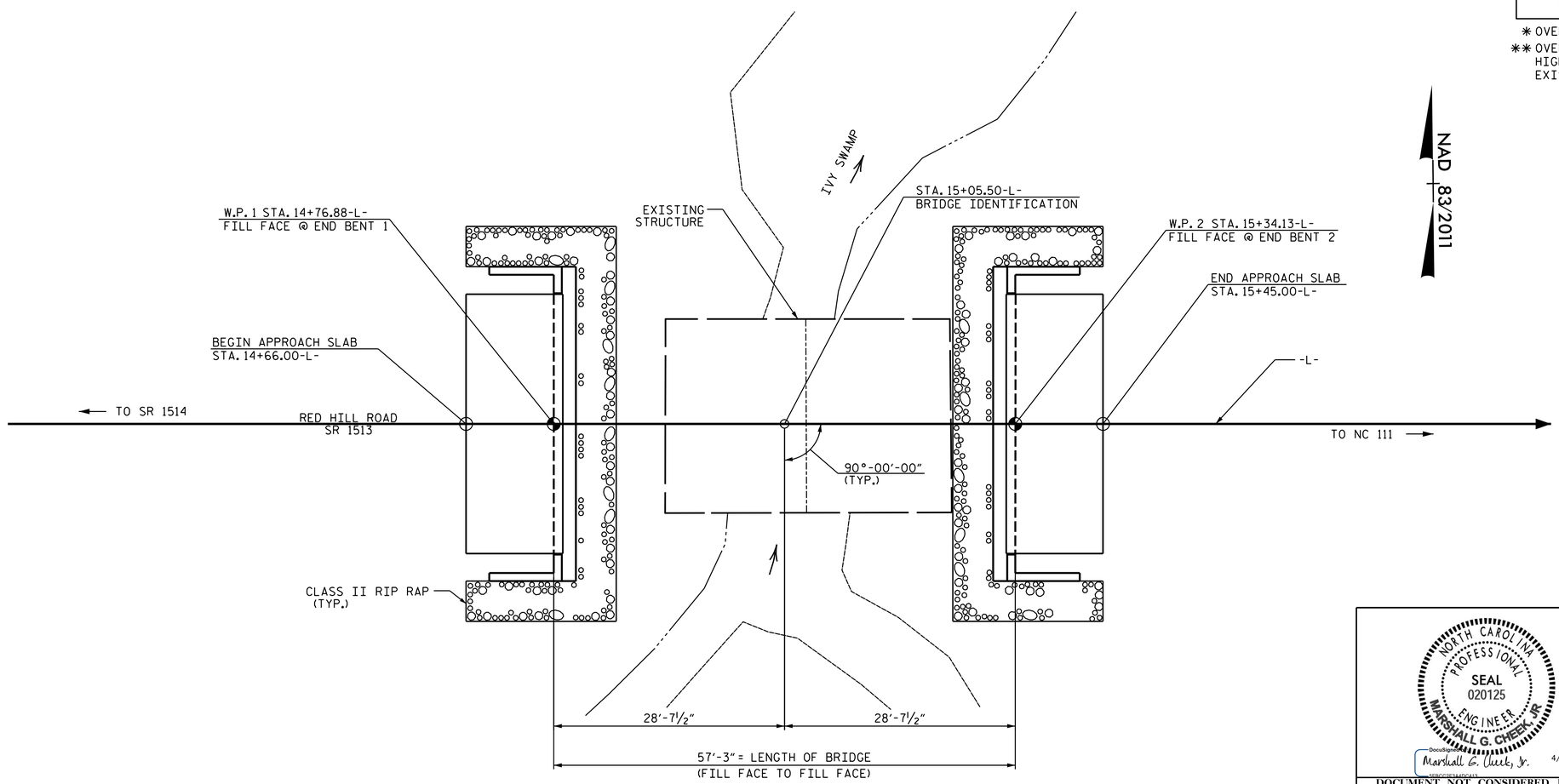

PLAN

PILES NOT SHOWN IN PLAN VIEW FOR CLARITY.

PROJECT NO. 17BP.4.R.85

WAYNE COUNTY

STATION: 15+05.50 -L-

SHEET 1 OF 3 REPLACES BRIDGE NO. 0040

NORTH CAROLINA PROFESSIONAL SEAL 020125 ENGINEER MARSHALL G. CHEEK, JR.

DocuSigned: Marshall G. Cheek, Jr. 4/2/2018

DOCUMENT NOT CONSIDERED FINAL UNLESS ALL SIGNATURES COMPLETED

TGS ENGINEERS
804-C N. LAFAYETTE ST
SHELBY, NC 28150
PH (704) 476-0003
CORP. LICENSE NO.: C-0275

STATE OF NORTH CAROLINA
DEPARTMENT OF TRANSPORTATION
RALEIGH

GENERAL DRAWING
FOR BRIDGE ON SR 1513
OVER IVY SWAMP
BETWEEN NC 111 AND SR 1514

REVISIONS								SHEET NO.
NO.	BY:	DATE:	NO.	BY:	DATE:			S-1
1			3					TOTAL SHEETS
2			4					15

DRAWN BY :	TBE	DATE :	3/18
CHECKED BY :	MGC	DATE :	3/18

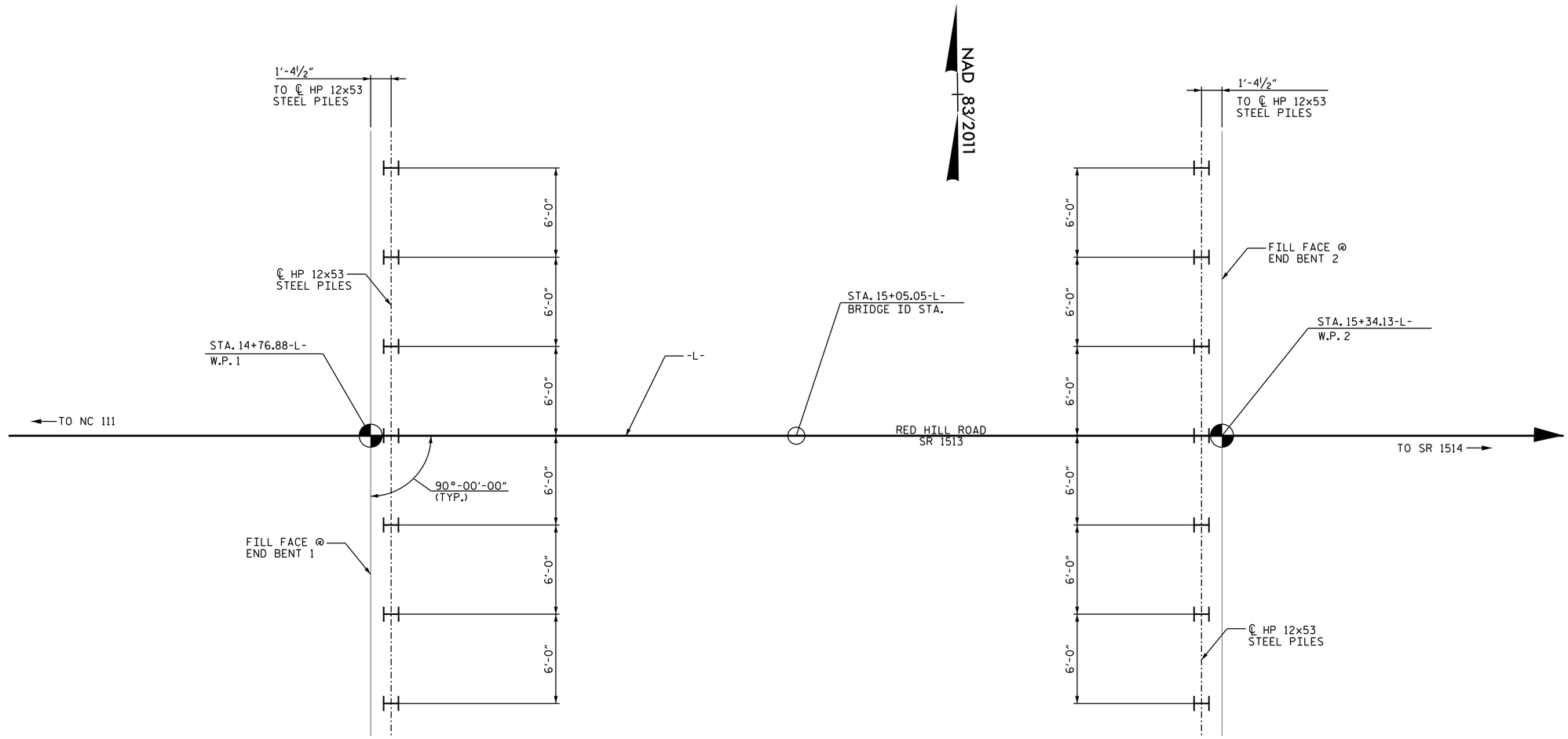

END BENT 1

END BENT 2

FOUNDATION LAYOUT PLAN

ALL END BENT PILES ARE HP 12x53 STEEL PILES. DIMENSIONS LOCATING PILES ARE SHOWN TO THE CENTERLINE OF PILES. ORIENT PILES AS SHOWN.

FOUNDATION RECOMMENDATION NOTES

FOR PILES, SEE SECTION 450 OF THE STANDARD SPECIFICATIONS.

PILES AT END BENT NO. 1 AND END BENT NO. 2 ARE DESIGNED FOR A FACTORED RESISTANCE OF 75 TONS PER PILE.

DRIVE PILES AT END BENT NO. 1 AND END BENT NO. 2 TO A REQUIRED DRIVING RESISTANCE OF 125 TONS PER PILE.

INSTALL PILES AT END BENT NO. 2 TO A TIP ELEVATION NO HIGHER THAN 45.0 FT.

TESTING PILES WITH THE PDA DURING DRIVING, RESTRIKING OR REDRIVING MAY BE REQUIRED. THE ENGINEER WILL DETERMINE THE NEED FOR PDA TESTING. FOR PDA TESTING, SEE SECTION 450 OF THE STANDARD SPECIFICTIONS.

PROJECT NO. 17BP.4.R.85
WAYNE COUNTY
STATION: 15+05.50 -L-

SHEET 2 OF 3

NORTH CAROLINA PROFESSIONAL SEAL 020125 ENGINEER MARSHALL G. CHEEK, JR.

DocuSigned: Marshall G. Cheek, Jr. 4/2/2018
5FBCC2F3A4DC413...

DOCUMENT NOT CONSIDERED FINAL UNLESS ALL SIGNATURES COMPLETED

TGS ENGINEERS
804-C N. LAFAYETTE ST
SHELBY, NC 28150
PH (704) 476-0003
CORP. LICENSE NO.: C-0275

STATE OF NORTH CAROLINA
DEPARTMENT OF TRANSPORTATION
RALEIGH

GENERAL DRAWING
FOR BRIDGE ON SR 1513
OVER IVY SWAMP
BETWEEN NC 111 AND SR 1514

REVISIONS						SHEET NO.
NO.	BY:	DATE:	NO.	BY:	DATE:	S-2
1			3			TOTAL SHEETS
2			4			15

DRAWN BY :	TBE	DATE :	3/18
CHECKED BY :	MGC	DATE :	3/18

BENCH MARK #1: BENCH TIE NAIL IN 24" OAK, 67.27' RT. OF STA. 13+67.21 -L-, ELEV.= 69.58' (NAVD 88)

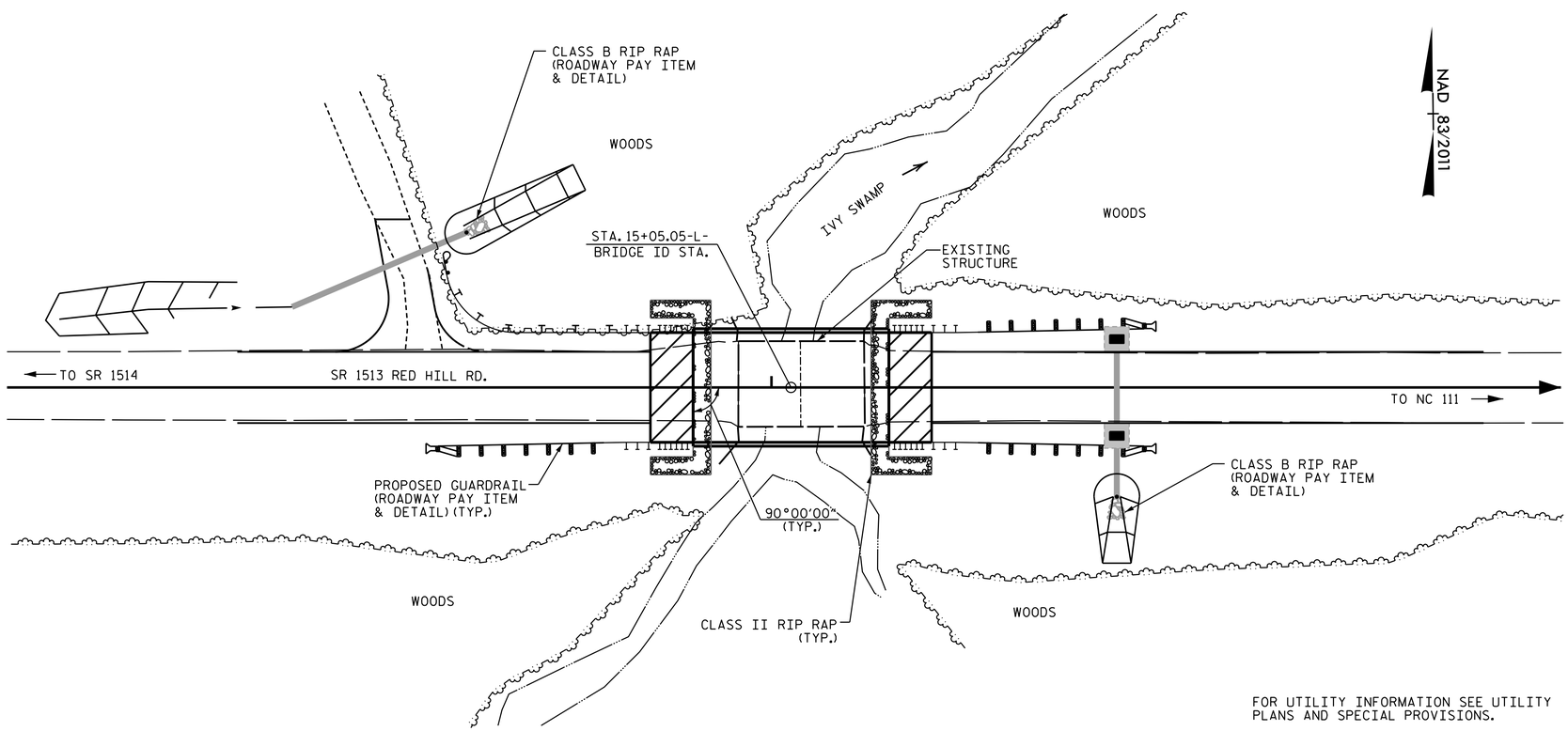

FOR UTILITY INFORMATION SEE UTILITY PLANS AND SPECIAL PROVISIONS.

LOCATION SKETCH

NOTES

ASSUMED LIVE LOAD = HL-93 OR ALTERNATE LOADING.

FOR OTHER DESIGN DATA AND GENERAL NOTES, SEE SHEET SN (S-15).

FOR EROSION CONTROL MEASURES, SEE EROSION CONTROL PLANS.

THIS BRIDGE HAS BEEN DESIGNED IN ACCORDANCE WITH THE AASHTO LRFD BRIDGE DESIGN SPECIFICATIONS.

THE EXISTING STRUCTURE CONSISTING OF 2 SPANS (2 @ 17'-10") REINFORCED CONCRETE FLOOR/TIMBER JOISTS, ON TIMBER CAPS/TIMBER PILES, SHALL BE REMOVED. THE EXISTING BRIDGE IS PRESENTLY POSTED BELOW THE LEGAL LOAD LIMIT. SHOULD THE STRUCTURAL INTEGRITY OF THE BRIDGE FURTHER DETERIORATE, THIS LOAD LIMITATION MAY BE REDUCED AS FOUND NECESSARY DURING THE LIFE OF THE PROJECT.

REMOVAL OF THE EXISTING BRIDGE SHALL BE PERFORMED IN A MANNER THAT PREVENTS DEBRIS FROM FALLING INTO WATER. THE CONTRACTOR SHALL SUBMIT DEMOLITION PLANS FOR REVIEW AND REMOVE THE BRIDGE IN ACCORDANCE WITH ARTICLE 402-2 OF THE STANDARD SPECIFICATIONS.

THE MATERIAL SHOWN IN THE CROSS-HATCHED AREA SHALL BE EXCAVATED FOR A DISTANCE OF 25 FEET EACH SIDE OF THE CENTERLINE OF THE BRIDGE AS DIRECTED BY THE ENGINEER. THIS WORK WILL BE PAID FOR AT THE CONTRACT LUMP SUM PRICE FOR UNCLASSIFIED STRUCTURE EXCAVATION, SEE SECTION 412 OF THE STANDARD SPECIFICATIONS.

THE SUBSTRUCTURE OF THE EXISTING BRIDGE INDICATED ON THE PLANS IS FROM THE BEST INFORMATION AVAILABLE. THIS INFORMATION IS SHOWN FOR THE CONVENIENCE OF THE CONTRACTOR. THE CONTRACTOR SHALL HAVE NO CLAIM WHATSOEVER AGAINST THE DEPARTMENT OF TRANSPORTATION FOR ANY DELAYS OR ADDITIONAL COST INCURRED BASED ON DIFFERENCES BETWEEN THE EXISTING BRIDGE SUBSTRUCTURE SHOWN ON THE PLANS AND THE ACTUAL CONDITIONS AT THE PROJECT SITE.

ASPHALT WEARING SURFACE IS INCLUDED IN ROADWAY QUANTITIES ON ROADWAY PLANS.

THIS STRUCTURE HAS BEEN DESIGNED IN ACCORDANCE WITH HEC 18, "EVALUATING SCOUR AT BRIDGES".

FOR GROUT FOR STRUCTURES, SEE SPECIAL PROVISIONS.

THIS BRIDGE IS LOCATED IN SEISMIC ZONE 1.

FOR FALSEWORK AND FORMWORK, SEE SPECIAL PROVISIONS.

FOR SUBMITTAL OF WORKING DRAWINGS, SEE SPECIAL PROVISIONS.

FOR CRANE SAFETY, SEE SPECIAL PROVISIONS.

FOR ASBESTOS ASSESSMENT FOR BRIDGE DEMOLITION AND RENOVATION ACTIVITIES, SEE SPECIAL PROVISIONS.

AT THE CONTRACTOR'S OPTION, PRESTRESSED CONCRETE END BENT CAPS MAY BE SUBSTITUTED IN PLACE OF THE CAST-IN-PLACE CAPS. THE CONTRACTOR SHALL COORDINATE WITH THE RESIDENT ENGINEER TO RECEIVE REVISED PLANS AND DETAILS FROM THE STRUCTURES MANAGEMENT UNIT. THE REDESIGN AND ANY ADDITIONAL MATERIALS NEEDED WILL BE AT NO ADDITIONAL COST TO THE CONTRACTOR.

TOTAL BILL OF MATERIAL

	REMOVAL OF EXISTING STRUCTURE	ASBESTOS ASSESSMENT	PDA TESTING	UNCLASSIFIED STRUCTURE EXCAVATION	CLASS "A" CONCRETE	BRIDGE APPROACH SLABS	REINFORCING STEEL	PILE DRIVING EQUIPMENT SETUP FOR HP 12x53 STEEL PILES	HP 12x53 STEEL PILES		PILE REDRIVES	VERTICAL CONCRETE BARRIER RAIL	RIP RAP CLASS II (2'-0" THK.)	GEOTEXTILE FOR DRAINAGE	ELASTOMERIC BEARINGS	3'-0" x 1'-9" PRESTRESSED CONCRETE CORED SLABS	
	LUMP SUM	LUMP SUM	EACH	LUMP SUM	C.Y.	LUMP SUM	LBS.	EACH	NO.	LIN. FT.	EACH	LIN. FT.	TONS	SQ. YDS.	LUMP SUM	NO.	LIN. FT.
SUPERSTRUCTURE												110.00				11	605.00
END BENT 1					21.6		2,636	7	7	350	4		135	150			
END BENT 2					21.6		2,636	7	7	350	4		145	160			
TOTALS	LUMP SUM	LUMP SUM	1	LUMP SUM	43.2	LUMP SUM	5,272	14	14	700	8	110.00	280	310	LUMP SUM	11	605.00

PROJECT NO. 17BP.4.R.85

WAYNE COUNTY

STATION: 15+05.50 -L-

SHEET 3 OF 3

NORTH CAROLINA PROFESSIONAL SEAL 020125 ENGINEER MARSHALL G. CHEEK, JR.

DocuSigned by: Marshall G. Cheek, Jr. 4/2/2018
SIGNATURE

DOCUMENT NOT CONSIDERED FINAL UNLESS ALL SIGNATURES COMPLETED

TGS ENGINEERS
804-C N. LAFAYETTE ST
SHELBY, NC 28150
PH (704) 476-0003
CORP. LICENSE NO.: C-0275

STATE OF NORTH CAROLINA
DEPARTMENT OF TRANSPORTATION
RALEIGH

GENERAL DRAWING
FOR BRIDGE ON SR 1513
OVER IVY SWAMP
BETWEEN NC 111 AND SR 1514

REVISIONS						SHEET NO.
NO.	BY:	DATE:	NO.	BY:	DATE:	S-3
1			3			TOTAL SHEETS
2			4			15

DRAWN BY :	TBE	DATE :	1/18
CHECKED BY :	MGC	DATE :	3/18

LOAD AND RESISTANCE FACTOR RATING (LRFD) SUMMARY FOR PRESTRESSED CONCRETE GIRDERS

LEVEL		VEHICLE	WEIGHT (W) (TONS)	CONTROLLING LOAD RATING	MINIMUM RATING FACTORS (RF)	TONS = W X RF	STRENGTH I LIMIT STATE											SERVICE III LIMIT STATE						COMMENT NUMBER
							LIVELOAD FACTORS	MOMENT					SHEAR					LIVELOAD FACTORS	MOMENT					
								DISTRIBUTION FACTORS (DF)	RATING FACTOR	SPAN	GIRDER LOCATION	DISTANCE FROM LEFT END OF SPAN (ft)	DISTRIBUTION FACTORS (DF)	RATING FACTOR	SPAN	GIRDER LOCATION	DISTANCE FROM LEFT END OF SPAN (ft)		DISTRIBUTION FACTORS (DF)	RATING FACTOR	SPAN	GIRDER LOCATION	DISTANCE FROM LEFT END OF SPAN (ft)	
DESIGN LOAD RATING		HL-93(Inv)	N/A	(1)	1.055	--	1.75	0.275	1.23	55'	EL	27	0.523	1.23	55'	EL	5.4	0.80	0.275	**1.05**	55'	EL	**27**	
		HL-93(Opr)	N/A	--	1.591	--	1.35	0.275	1.59	55'	EL	27	0.523	1.59	55'	EL	5.4	N/A	--	--	--	--	--	
		HS-20(Inv)	36.000	(2)	1.322	47.585	1.75	0.275	1.54	55'	EL	27	0.523	1.47	55'	EL	5.4	0.80	0.275	**1.32**	55'	EL	**27**	
		HS-20(Opr)	36.000	--	1.9	68.396	1.35	0.275	1.99	55'	EL	27	0.523	1.9	55'	EL	5.4	N/A	--	--	--	--	--	
LEGAL LOAD RATING	SV	SNSH	13.500	--	2.776	37.476	1.4	0.275	4.04	55'	EL	27	0.523	4.17	55'	EL	5.4	0.80	0.275	2.78	55'	EL	27	
		SNGARBS2	20.000	--	2.155	43.095	1.4	0.275	3.14	55'	EL	27	0.523	3.02	55'	EL	5.4	0.80	0.275	2.15	55'	EL	27	
		SNAGRIS2	22.000	--	2.079	45.734	1.4	0.275	3.03	55'	EL	27	0.523	2.83	55'	EL	5.4	0.80	0.275	2.08	55'	EL	27	
		SNCOTTS3	27.250	--	1.384	37.708	1.4	0.275	2.01	55'	EL	27	0.523	2.09	55'	EL	5.4	0.80	0.275	1.38	55'	EL	27	
		SNAGGRS4	34.925	--	1.189	41.527	1.4	0.275	1.73	55'	EL	27	0.523	1.77	55'	EL	5.4	0.80	0.275	1.19	55'	EL	27	
		SNS5A	35.550	--	1.16	41.255	1.4	0.275	1.69	55'	EL	27	0.523	1.82	55'	EL	5.4	0.80	0.275	1.16	55'	EL	27	
		SNS6A	39.950	--	1.079	43.102	1.4	0.275	1.57	55'	EL	27	0.523	1.68	55'	EL	5.4	0.80	0.275	1.08	55'	EL	27	
		SNS7B	42.000	--	1.028	43.175	1.4	0.275	1.5	55'	EL	27	0.523	1.67	55'	EL	5.4	0.80	0.275	1.03	55'	EL	27	
	TTST	TNAGRIT3	33.000	--	1.32	43.556	1.4	0.275	1.92	55'	EL	27	0.523	1.98	55'	EL	5.4	0.80	0.275	1.32	55'	EL	27	
		TNT4A	33.075	--	1.33	43.979	1.4	0.275	1.94	55'	EL	27	0.523	1.91	55'	EL	5.4	0.80	0.275	1.33	55'	EL	27	
		TNT6A	41.600	--	1.101	45.811	1.4	0.275	1.6	55'	EL	27	0.523	1.83	55'	EL	5.4	0.80	0.275	1.10	55'	EL	27	
		TNT7A	42.000	--	1.114	46.804	1.4	0.275	1.62	55'	EL	27	0.523	1.71	55'	EL	5.4	0.80	0.275	1.11	55'	EL	27	
		TNT7B	42.000	--	1.163	48.848	1.4	0.275	1.69	55'	EL	27	0.523	1.62	55'	EL	5.4	0.80	0.275	1.16	55'	EL	27	
		TNAGRIT4	43.000	--	1.101	47.33	1.4	0.275	1.6	55'	EL	27	0.523	1.56	55'	EL	5.4	0.80	0.275	1.10	55'	EL	27	
		TNAGT5A	45.000	--	1.031	46.405	1.4	0.275	1.5	55'	EL	27	0.523	1.58	55'	EL	5.4	0.80	0.275	1.03	55'	EL	27	
		TNAGT5B	45.000	(3)	1.013	45.582	1.4	0.275	1.47	55'	EL	27	0.523	1.48	55'	EL	5.4	0.80	0.275	**1.01**	55'	EL	**27**	

LOAD FACTORS:

DESIGN LOAD RATING FACTORS	LIMIT STATE	γ_{DC}	γ_{DW}
	STRENGTH I	1.25	1.50
	SERVICE III	1.00	1.00

NOTES:

MINIMUM RATING FACTORS ARE BASED ON THE STRENGTH I AND SERVICE III LIMIT STATES.

ALLOWABLE STRESSES FOR SERVICE III LIMIT STATE ARE AS REQUIRED FOR DESIGN.

(#) CONTROLLING LOAD RATING

(1) DESIGN LOAD RATING (HL-93)

(2) DESIGN LOAD RATING (HS-20)

(3) LEGAL LOAD RATING **

** SEE CHART FOR VEHICLE TYPE

GIRDER LOCATION

I - INTERIOR GIRDER
EL - EXTERIOR LEFT GIRDER
ER - EXTERIOR RIGHT GIRDER

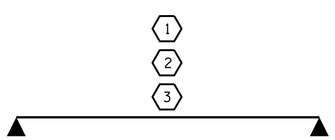

LRFR SUMMARY

FOR SPAN 'A'

PROJECT NO. 17BP.4.R.85

WAYNE COUNTY

STATION: 15+05.50 -L-

NORTH CAROLINA PROFESSIONAL SEAL 020125 ENGINEER MARSHALL G. CHEEK, JR.

DocuSigned Marshall G. Cheek, Jr. 4/2/2018
5EBCC2E3A6DC413...

DOCUMENT NOT CONSIDERED FINAL UNLESS ALL SIGNATURES COMPLETED

TGS ENGINEERS
804-C N. LAFAYETTE ST
SHELBY, NC 28150
PH (704) 476-0003
CORP. LICENSE NO.: C-0275

STATE OF NORTH CAROLINA
DEPARTMENT OF TRANSPORTATION
RALEIGH

STANDARD

LRFR SUMMARY FOR 55' CORED SLAB UNIT 90° SKEW (NON-INTERSTATE TRAFFIC)

REVISIONS						SHEET NO.
NO.	BY:	DATE:	NO.	BY:	DATE:	S-4
1			3			TOTAL SHEETS
2			4			15

ASSEMBLED BY :	TBE	DATE :	3/18
CHECKED BY :	MGC	DATE :	3/18
DRAWN BY : CVC	6/10		
CHECKED BY : DNS	6/10		

3/29/2018
$$$$$$$$$$$$$$$$$$$$$$$$$$DGN$$$$$$$$$$$$$$$$$$$$$$$$$$
User:tennis

STD. NO. 21LRFR1_90S_55L

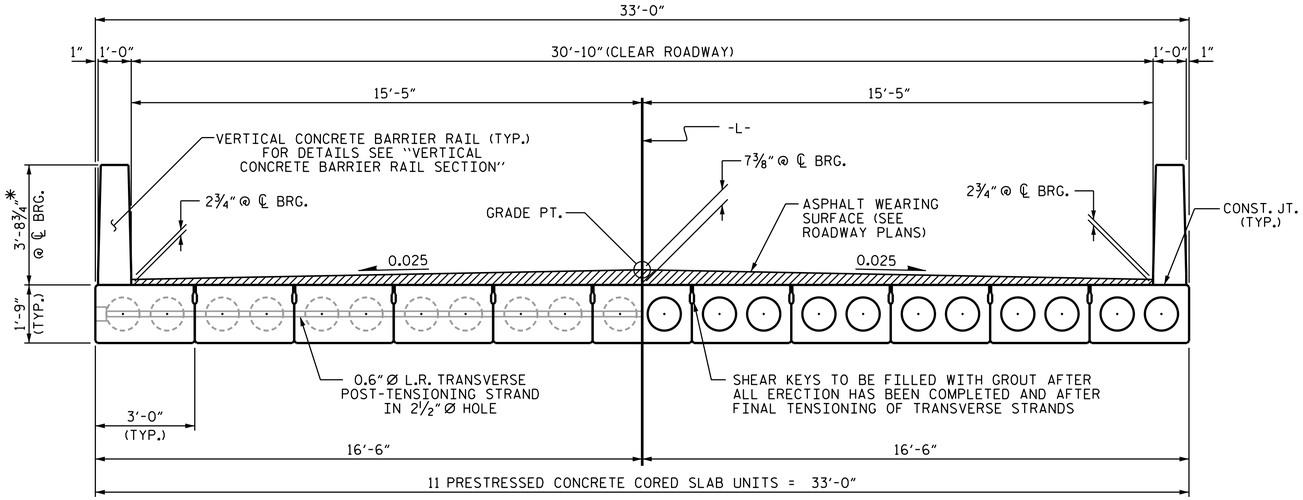

HALF SECTION
AT INTERMEDIATE DIAPHRAGMS

HALF SECTION
THROUGH VOIDS

TYPICAL SECTION

* - THE MAXIMUM BARRIER RAIL HEIGHT AND ASPHALT THICKNESS IS SHOWN. THE HEIGHT OF THE BARRIER RAIL AND ASPHALT THICKNESS VARIES WHILE THE TOP OF THE BARRIER RAIL FOLLOWS THE PROFILE OF THE GUTTERLINE. FOR RAIL HEIGHT DETAILS AND ASPHALT THICKNESS SEE THE "VERTICAL CONCRETE BARRIER RAIL DETAILS", SHEET 3 OF 3.

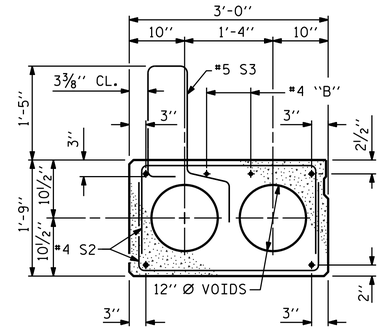

EXT. SLAB SECTION

(FOR PRESTRESSED STRAND LAYOUT, SEE INTERIOR SLAB SECTION.)

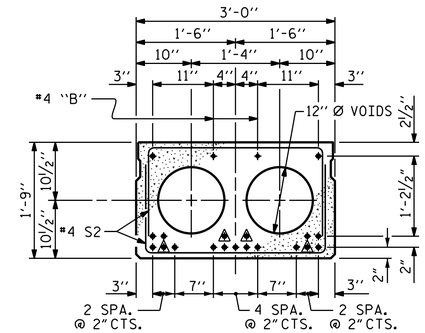

INTERIOR SLAB SECTION (55' UNIT)

(19 STRANDS REQUIRED)

0.6" Ø LOW RELAXATION STRAND LAYOUT

▲ BOND SHALL BE BROKEN ON THESE STRANDS FOR A DISTANCE OF 6'-0" FROM END OF CORED SLAB UNIT. SEE STANDARD SPECIFICATIONS, ARTICLE 1078-7.

DEBONDING LEGEND

FIXED END

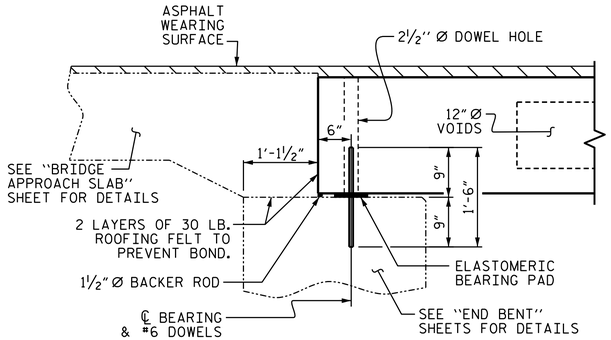

SECTION AT END BENT

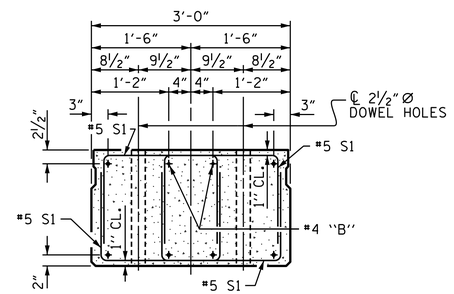

END ELEVATION

SHOWING PLACEMENT OF DOUBLE STIRRUPS AND LOCATION OF DOWEL HOLES. (STRAND LAYOUT NOT SHOWN.) INTERIOR SLAB UNIT SHOWN-EXTERIOR SLAB UNIT SIMILAR EXCEPT SHEAR KEY LOCATION.

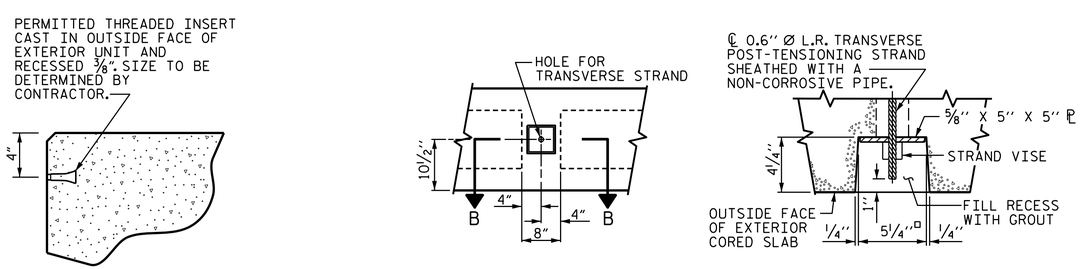

THREADED INSERT DETAIL

ELEVATION VIEW

SECTION B-B

GROUTED RECESS AT END OF POST-TENSIONED STRAND OF CORED SLABS

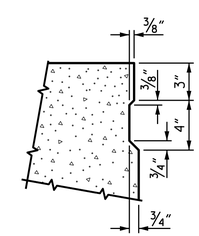

SHEAR KEY DETAIL

NOTE: OMIT SHEAR KEY ON OUTSIDE FACE OF EXTERIOR CORED SLABS.

PROJECT NO. 17BP.4.R.85

WAYNE COUNTY

STATION: 15+05.50 -L-

SHEET 1 OF 3

NORTH CAROLINA PROFESSIONAL SEAL 020125 ENGINEER MARSHALL G. CHEEK, JR.

DocuSigned: Marshall G. Cheek, Jr. 4/2/2018

DOCUMENT NOT CONSIDERED FINAL UNLESS ALL SIGNATURES COMPLETED

TGS ENGINEERS
804-C N. LAFAYETTE ST
SHELBY, NC 28150
PH (704) 476-0003
CORP. LICENSE NO.: C-0275

STATE OF NORTH CAROLINA
DEPARTMENT OF TRANSPORTATION
RALEIGH

STANDARD
3'-0" X 1'-9"
PRESTRESSED CONCRETE CORED SLAB UNIT
90° SKEW

REVISIONS						
NO.	BY:	DATE:	NO.	BY:	DATE:	
1			3			
2			4			

SHEET NO. S-5

TOTAL SHEETS 15

DRAWN BY :	TBE	DATE :	3/18
CHECKED BY :	MGC	DATE :	3/18

STD. NO. 21" PCS2_33_90S

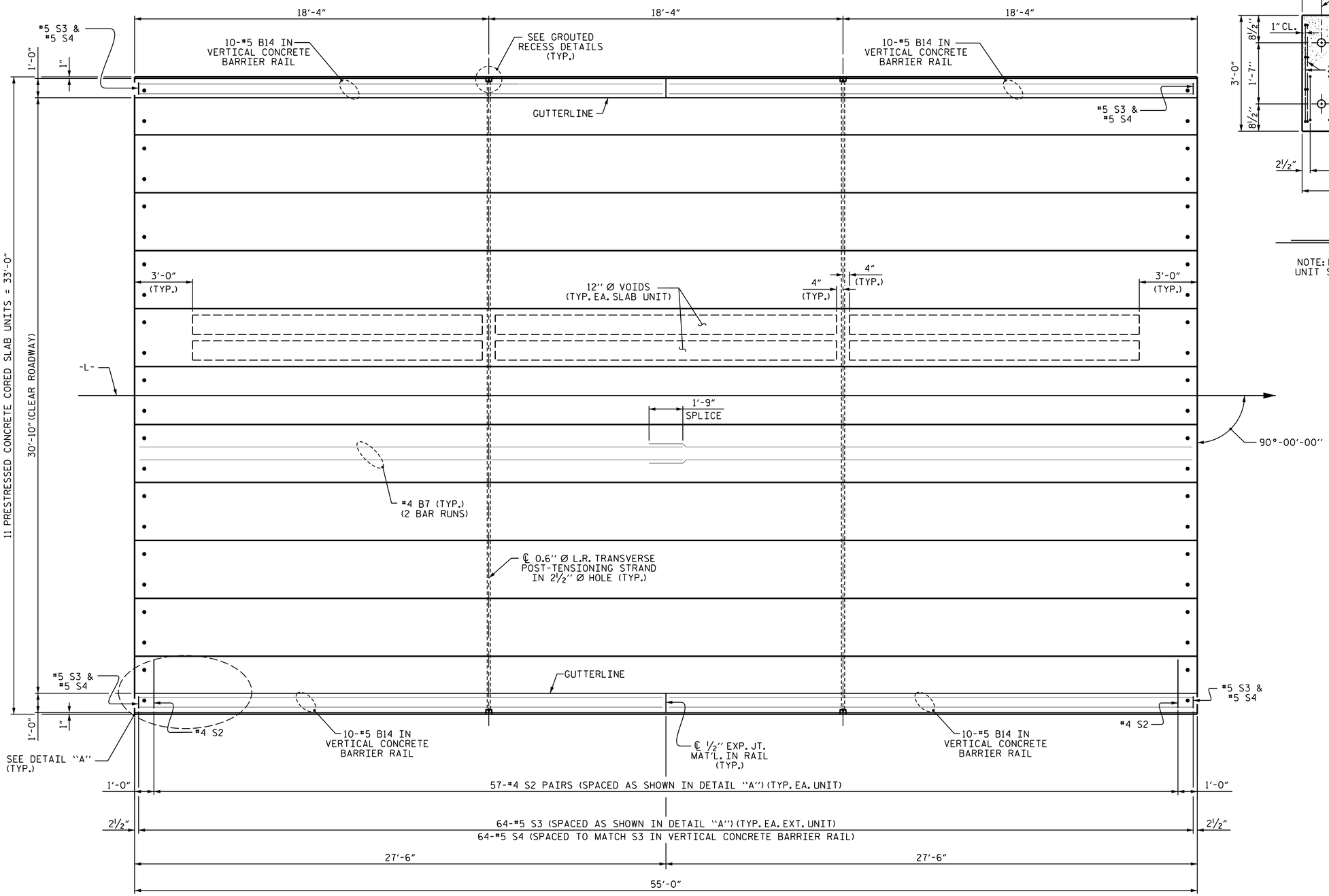

PLAN OF UNIT

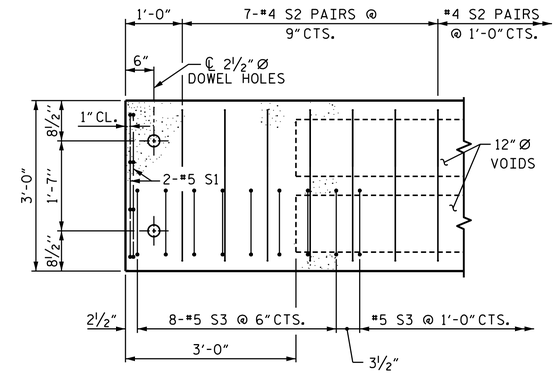

DETAIL "A"

(TYPICAL EACH END OF UNIT)
NOTE: EXTERIOR UNIT SHOWN - INTERIOR UNIT SIMILAR EXCEPT OMIT #5 S3 BARS.

NORTH CAROLINA PROFESSIONAL SEAL 020125 ENGINEER MARSHALL G. CHEEK, JR.

DocuSigned by: Marshall G. Cheek, Jr. 4/2/2018
5EBCC7EA4DC413...

DOCUMENT NOT CONSIDERED FINAL UNLESS ALL SIGNATURES COMPLETED

TGS ENGINEERS
804-C N. LAFAYETTE ST
SHELBY, NC 28150
PH (704) 476-0003
CORP. LICENSE NO.: C-0275

PROJECT NO. 17BP.4.R.85

WAYNE COUNTY

STATION: 15+05.50 -L-

SHEET 2 OF 3

STATE OF NORTH CAROLINA
DEPARTMENT OF TRANSPORTATION
RALEIGH

PLAN OF 55' UNIT
30'-10" CLEAR ROADWAY
90° SKEW

REVISIONS						SHEET NO.
NO.	BY:	DATE:	NO.	BY:	DATE:	S-6
1			3			TOTAL SHEETS
2			4			15

DRAWN BY :	TBE	DATE :	3/18
CHECKED BY :	MGC	DATE :	3/18

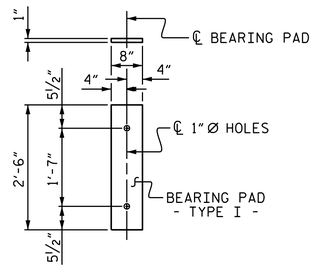

FIXED END
(TYPE I - 22 REQ'D)

ELASTOMERIC BEARING DETAILS

ELASTOMER IN ALL BEARINGS SHALL BE 50 DUROMETER HARDNESS.

DEAD LOAD DEFLECTION AND CAMBER	
	3'-0" x 1'-9"
55' CORED SLAB UNIT	0.6" Ø L.R. STRAND
CAMBER (SLAB ALONE IN PLACE)	1½" ↑
DEFLECTION DUE TO SUPERIMPOSED DEAD LOAD**	⅜" ↓
FINAL CAMBER	1⅛" ↑

** INCLUDES FUTURE WEARING SURFACE

BILL OF MATERIAL FOR ONE 55' CORED SLAB UNIT

				EXTERIOR UNIT		INTERIOR UNIT	
BAR	NUMBER	SIZE	TYPE	LENGTH	WEIGHT	LENGTH	WEIGHT
B7	4	#4	STR	28'-3"	75	28'-3"	75
S1	8	#5	3	4'-3"	35	4'-3"	35
S2	114	#4	3	5'-4"	406	5'-4"	406
* S3	64	#5	1	5'-8"	378		
REINFORCING STEEL			LBS.		516		516
* EPOXY COATED REINFORCING STEEL			LBS.		378		
6500 P.S.I. CONCRETE			CU. YDS.		7.8		7.8
0.6" Ø L.R. STRANDS			No.		19		19

GUTTERLINE ASPHALT THICKNESS & RAIL HEIGHT

	ASPHALT OVERLAY THICKNESS	RAIL HEIGHT
55' UNITS	1⅝"	3'-7⅝"

BAR TYPES

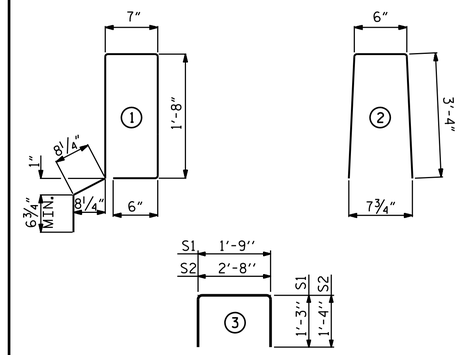

ALL BAR DIMENSIONS ARE OUT TO OUT

BILL OF MATERIAL FOR VERTICAL CONCRETE BARRIER RAIL

BAR	BARS PER PAIR OF EXTERIOR UNITS	TOTAL NO.	SIZE	TYPE	LENGTH	WEIGHT
	55' UNIT					
* B14	40	40	#5	STR	27'-1"	1130
* S4	128	128	#5	2	7'-2"	957
* EPOXY COATED REINFORCING STEEL				LBS.		2087
CLASS AA CONCRETE				CU.YDS.		14.1
TOTAL VERTICAL CONCRETE BARRIER RAIL				LIN. FT.		110.00

GRADE 270 STRANDS

	0.6" Ø L.R.
AREA (SQUARE INCHES)	0.217
ULTIMATE STRENGTH (LBS. PER STRAND)	58,600
APPLIED PRESTRESS (LBS. PER STRAND)	43,950

CORED SLABS REQUIRED

	NUMBER	LENGTH	TOTAL LENGTH
55' UNIT			
EXTERIOR C.S.	2	55'-0"	110'-0"
INTERIOR C.S.	9	55'-0"	495'-0"
TOTAL	11		605'-0"

CONCRETE RELEASE STRENGTH

UNIT	PSI
55' UNITS	4900

NOTES

ALL PRESTRESSING STRANDS SHALL BE 7-WIRE LOW RELAXATION GRADE 270 STRANDS AND SHALL CONFORM TO AASHTO M203 EXCEPT FOR SAMPLING REQUIREMENTS WHICH SHALL BE IN ACCORDANCE WITH THE STANDARD SPECIFICATIONS.

ALL REINFORCING STEEL CAST WITH THE CORED SLAB SECTIONS SHALL BE GRADE 60 AND SHALL BE INCLUDED IN THE UNIT PRICE BID FOR PRESTRESSED CONCRETE CORED SLABS.

RECESSES FOR TRANSVERSE STRANDS SHALL BE GROUTED AFTER THE TENSIONING OF THE STRANDS.

THE 2½" Ø DOWEL HOLES AT FIXED ENDS OF SLAB SECTIONS SHALL BE FILLED WITH NON-SHRINK GROUT.

THE BACKER RODS SHALL CONFORM TO THE REQUIREMENTS OF TYPE M BOND BREAKER. SEE SECTION 1028 OF THE STANDARD SPECIFICATIONS.

WHEN CORED SLABS ARE CAST, AN INTERNAL HOLD-DOWN SYSTEM SHALL BE EMPLOYED TO PREVENT VOIDS FROM RISING OR MOVING SIDEWAYS. AT LEAST SIX WEEKS PRIOR TO CASTING CORED SLABS, THE CONTRACTOR SHALL SUBMIT TO THE ENGINEER FOR REVIEW AND COMMENT, DETAILED DRAWINGS OF THE PROPOSED HOLD-DOWN SYSTEM. IN ADDITION TO STRUCTURAL DETAILS, LOCATION AND SPACING OF THE HOLD-DOWNS SHALL BE INDICATED.

ALL REINFORCING STEEL IN THE VERTICAL CONCRETE BARRIER RAIL SHALL BE EPOXY COATED.

PRESTRESSING STRANDS SHALL BE CUT FLUSH WITH THE CORED SLAB UNIT ENDS.

APPLY EPOXY PROTECTIVE COATING TO CORED SLAB UNIT ENDS.

GROOVED CONTRACTION JOINTS, ½" IN DEPTH, SHALL BE TOOLED IN ALL EXPOSED FACES OF THE BARRIER RAIL AND IN ACCORDANCE WITH ARTICLE 825-10(B) OF THE STANDARD SPECIFICATIONS. A CONTRACTION JOINT SHALL BE LOCATED AT EACH THIRD POINT BETWEEN BARRIER RAIL EXPANSION JOINTS. ONLY ONE CONTRACTION JOINT IS REQUIRED AT MIDPOINT OF BARRIER RAIL SEGMENTS LESS THAN 20 FEET IN LENGTH AND NO CONTRACTION JOINTS ARE REQUIRED FOR THOSE SEGMENTS LESS THAN 10 FEET IN LENGTH.

FLAME CUTTING OF THE TRANSVERSE POST-TENSIONING STRAND IS NOT ALLOWED.

THE TRANSFER OF LOAD FROM THE ANCHORAGES TO THE CORED SLAB UNIT SHALL BE DONE WHEN THE CONCRETE HAS REACHED A COMPRESSIVE STRENGTH OF NOT LESS THAN THE REQUIRED STRENGTH SHOWN IN THE "CONCRETE RELEASE STRENGTH" TABLE.

FOR GROUT FOR STRUCTURES, SEE SPECIAL PROVISIONS.

THE PERMITTED THREADED INSERTS ARE DETAILED AS AN OPTION FOR THE CONTRACTOR TO ATTACH FALSEWORK AND FORMWORK DURING CONSTRUCTION.

THE PERMITTED THREADED INSERTS IN THE EXTERIOR UNITS SHALL BE SIZED BY THE CONTRACTOR, SPACED AT 4'-0" CENTERS AND GALVANIZED IN ACCORDANCE WITH SECTION 1076 OF THE STANDARD SPECIFICATIONS. STAINLESS STEEL THREADED INSERTS MAY BE USED AS AN ALTERNATE.

THE PERMITTED THREADED INSERTS SHALL BE GROUTED BY THE CONTRACTOR IMMEDIATELY FOLLOWING REMOVAL OF THE FALSEWORK.

THE COST OF THE PERMITTED THREADED INSERTS SHALL BE INCLUDED IN THE PRICE BID FOR THE PRECAST UNITS.

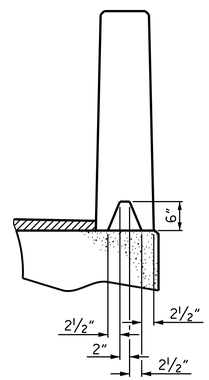

SECTION S-S
AT DAM IN OPEN JOINT
(THIS IS TO BE USED ONLY WHEN SLIP FORM IS USED)

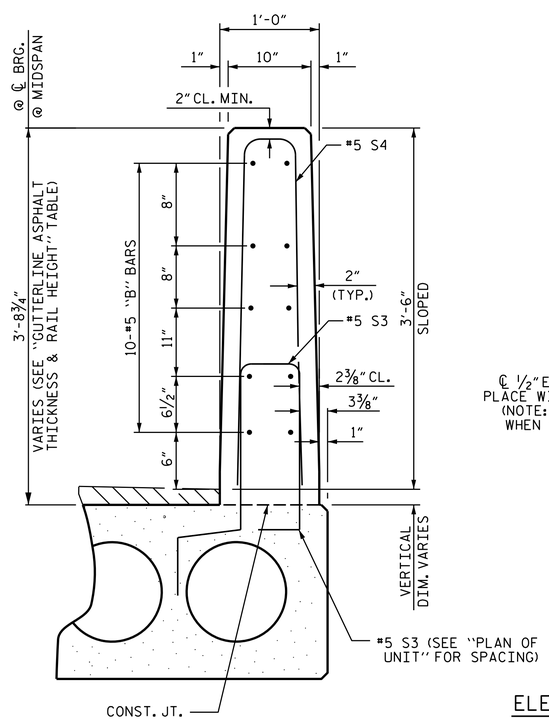

VERTICAL CONCRETE BARRIER RAIL SECTION

℄ ½" EXP. JT. MAT'L HELD IN PLACE WITH GALVANIZED NAILS. (NOTE: OMIT EXP. JT. MAT'L. WHEN SLIP FORM IS USED)

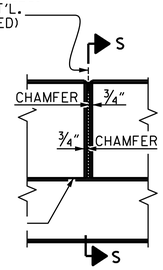

ELEVATION AT EXPANSION JOINTS

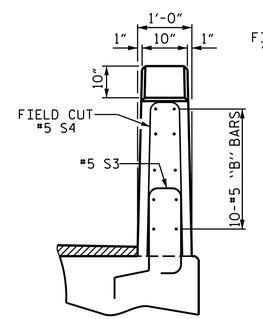

END VIEW

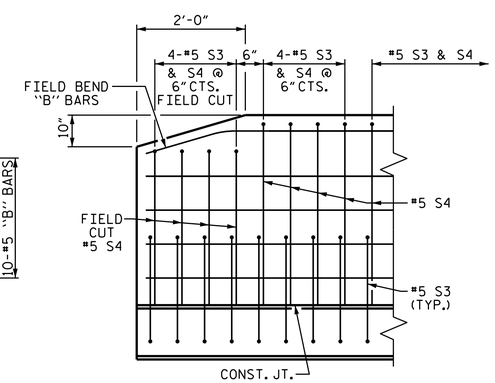

SIDE VIEW

END OF RAIL DETAILS

PROJECT NO. 17BP.4.R.85
WAYNE COUNTY
STATION: 15+05.50 -L-

SHEET 3 OF 3

NORTH CAROLINA PROFESSIONAL SEAL 020125 ENGINEER MARSHALL G. CHEEK, JR.

Marshall G. Cheek, Jr. 4/19/2018

DOCUMENT NOT CONSIDERED FINAL UNLESS ALL SIGNATURES COMPLETED

TGS ENGINEERS
804-C N. LAFAYETTE ST
SHELBY, NC 28150
PH (704) 476-0003
CORP. LICENSE NO.: C-0275

STATE OF NORTH CAROLINA
DEPARTMENT OF TRANSPORTATION
RALEIGH

STANDARD
3'-0" X 1'-9"
PRESTRESSED CONCRETE
CORED SLAB UNIT
90° SKEW

REVISIONS						SHEET NO.
NO.	BY:	DATE:	NO.	BY:	DATE:	S-7
1			3			TOTAL SHEETS
2			4			15

DRAWN BY :	TBE	DATE :	3/18
CHECKED BY :	MGC	DATE :	3/18

STD. NO. 21" PCS3_33_90S

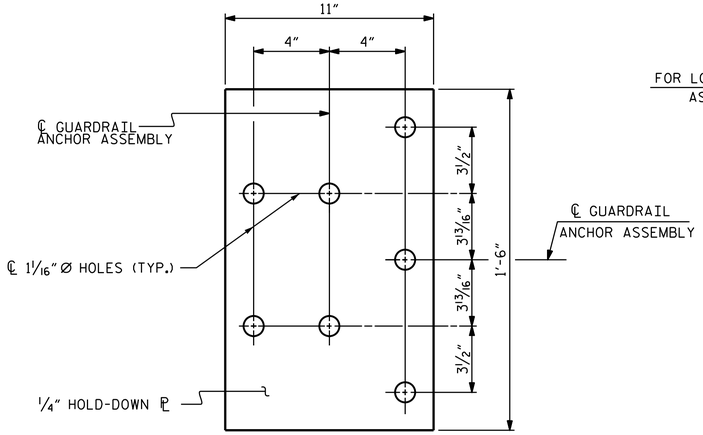

PLAN

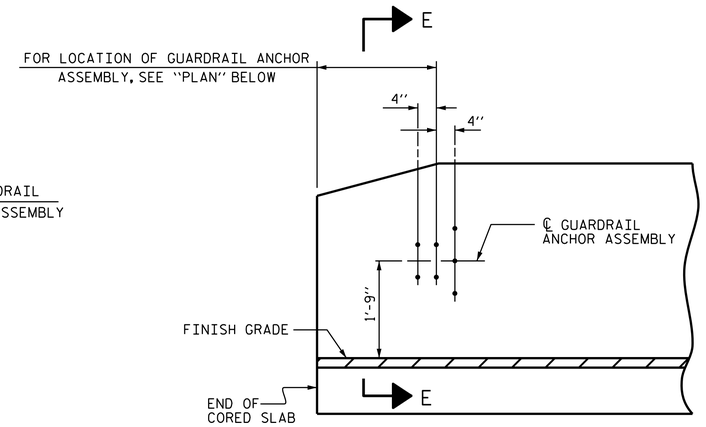

ELEVATION

NOTES

THE GUARDRAIL ANCHOR ASSEMBLY SHALL CONSIST OF A 1/4" HOLD DOWN PLATE AND 7 - 7/8" Ø BOLTS WITH NUTS AND WASHERS.

THE HOLD-DOWN PLATE SHALL CONFORM TO AASHTO M270 GRADE 36. AFTER FABRICATION, THE HOLD-DOWN PLATE SHALL BE HOT-DIP GALVANIZED IN ACCORDANCE WITH AASHTO M111.

BOLTS SHALL CONFORM TO THE REQUIREMENTS OF ASTM A307 AND NUTS SHALL CONFORM TO THE REQUIREMENTS OF AASHTO M291. BOLTS, NUTS AND WASHERS SHALL BE GALVANIZED. (AT THE CONTRACTOR'S OPTION, STAINLESS STEEL BOLTS, NUTS AND WASHERS MAY BE USED AS AN ALTERNATE FOR THE 7/8" Ø GALVANIZED BOLTS, NUTS AND WASHERS. THEY SHALL CONFORM TO OR EXCEED THE MECHANICAL REQUIREMENTS OF ASTM A307. THE USE OF THIS ALTERNATE SHALL BE APPROVED BY THE ENGINEER.)

THE GUARDRAIL ANCHOR ASSEMBLY IS REQUIRED AT ALL POINTS WHERE APPROACH GUARDRAIL IS TO BE ATTACHED TO THE END OF BARRIER RAIL. FOR POINTS OF ATTACHMENT, SEE SKETCH.

AFTER INSTALLATION, THE EXPOSED THREAD OF THE BOLT SHALL BE BURRED WITH A SHARP POINTED TOOL.

THE COST OF THE GUARDRAIL ANCHOR ASSEMBLY SHALL BE INCLUDED IN THE UNIT CONTRACT PRICE BID FOR VERTICAL CONCRETE BARRIER RAIL.

THE VERTICAL REINFORCING BARS MAY BE SHIFTED SLIGHTLY IN THE VERTICAL CONCRETE BARRIER RAIL TO CLEAR ASSEMBLY BOLTS.

THE 1 1/4" Ø HOLES SHALL BE FORMED OR DRILLED WITH A CORE BIT. IMPACT TOOLS WILL NOT BE PERMITTED. ANY CONCRETE DAMAGED BY THIS WORK SHALL BE REPAIRED TO THE SATISFACTION OF THE ENGINEER.

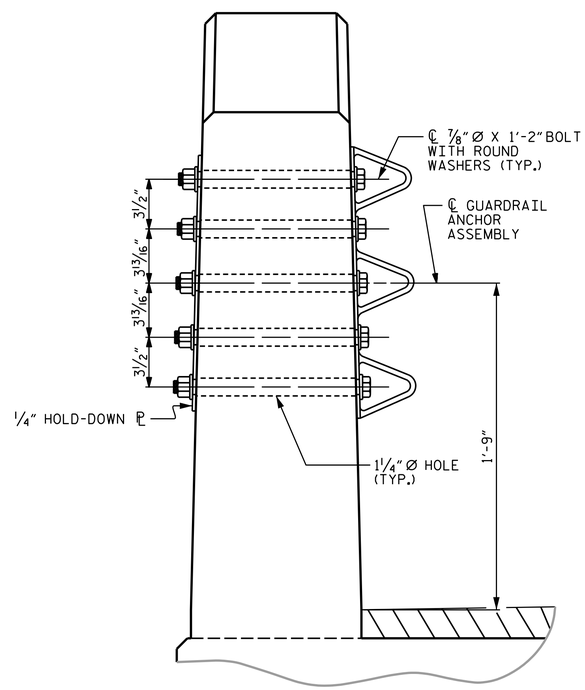

SECTION E-E

GUARDRAIL ANCHOR ASSEMBLY DETAILS

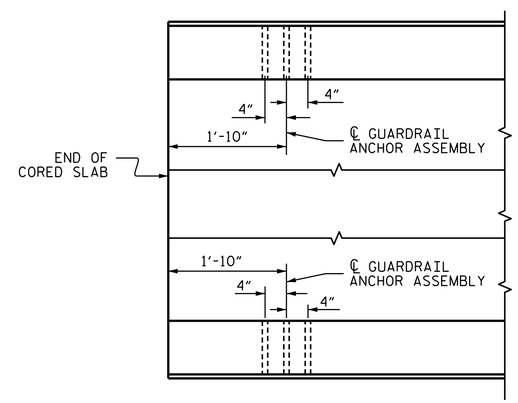

PLAN

LOCATION OF ANCHORS FOR GUARDRAIL

END BENT #1 SHOWN, END BENT #2 SIMILAR.

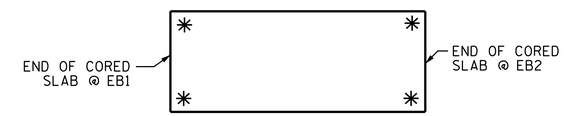

SKETCH SHOWING POINTS OF ATTACHMENT

✳ DENOTES GUARDRAIL ANCHOR ASSEMBLY

PROJECT NO. 17BP.4.R.85

WAYNE COUNTY

STATION: 15+05.50 -L-

NORTH CAROLINA PROFESSIONAL SEAL 020125 ENGINEER MARSHALL G. CHEEK, JR.

DocuSigned by: Marshall G. Cheek, Jr. 4/2/2018

DOCUMENT NOT CONSIDERED FINAL UNLESS ALL SIGNATURES COMPLETED

TGS ENGINEERS
804-C N. LAFAYETTE ST
SHELBY, NC 28150
PH (704) 476-0003
CORP. LICENSE NO.: C-0275

STATE OF NORTH CAROLINA
DEPARTMENT OF TRANSPORTATION
RALEIGH

STANDARD
GUARDRAIL ANCHORAGE DETAILS FOR VERTICAL CONCRETE BARRIER RAIL

REVISIONS						
NO.	BY:	DATE:	NO.	BY:	DATE:	
1			3			
2			4			

SHEET NO. S-8

TOTAL SHEETS 15

DRAWN BY :	TBE	DATE :	3/18
CHECKED BY :	MGC	DATE :	3/18

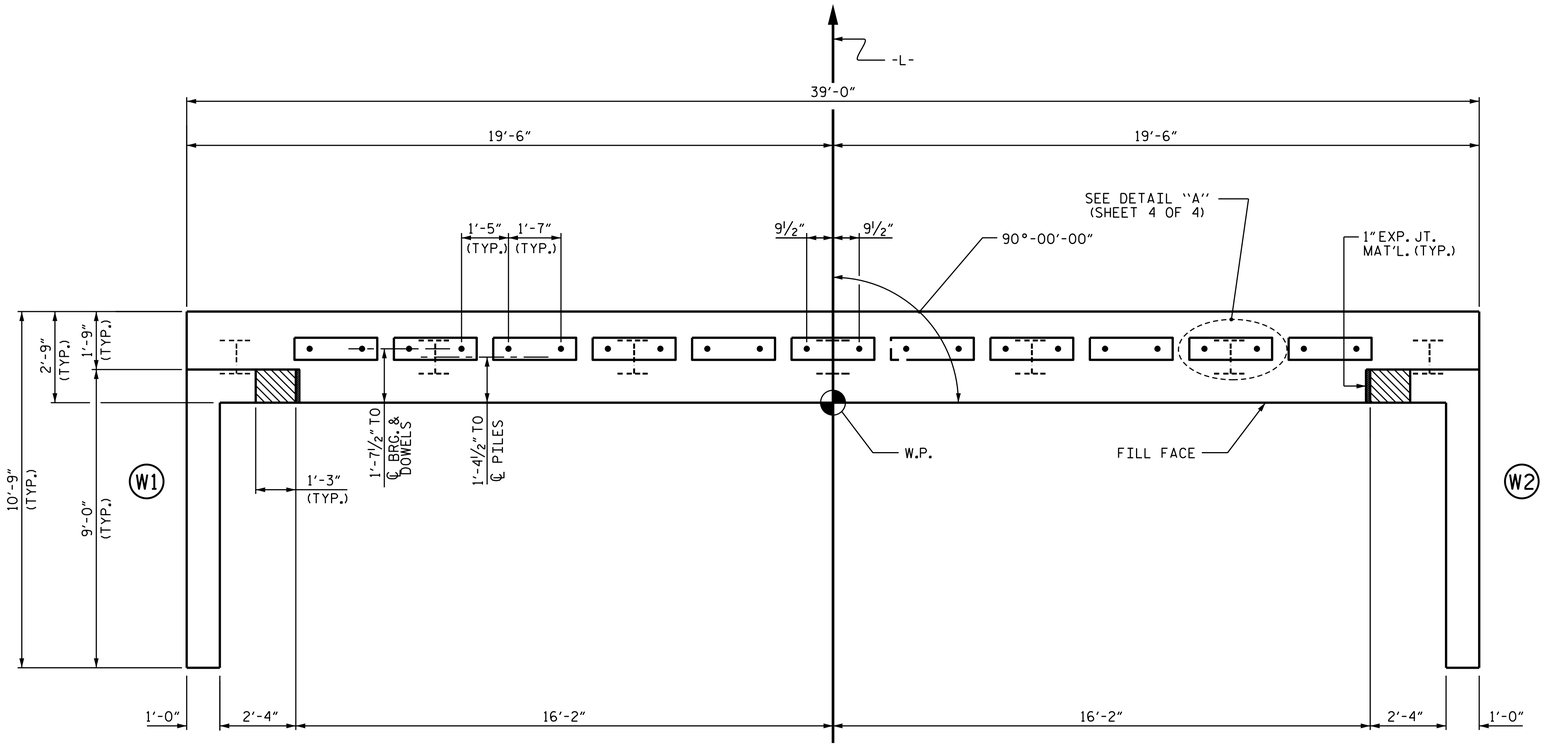

PLAN

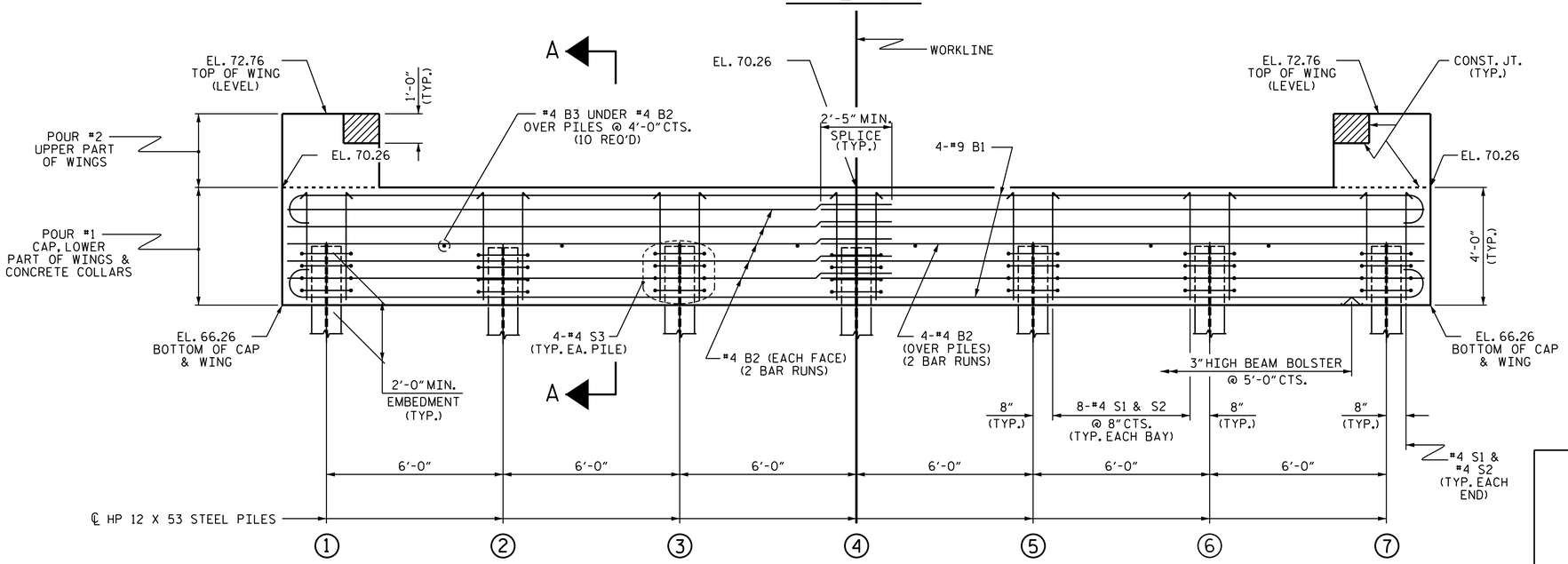

ELEVATION

WINGS NOT SHOWN FOR CLARITY.
FOR SECTION A-A, SEE SHEET 4 OF 4.
CONCRETE COLLARS FOR STEEL PILES NOT SHOWN IN PLAN AND ELEVATION VIEWS FOR CLARITY.
SEE "CORROSION PROTECTION FOR STEEL PILES DETAIL", SHEET 4 OF 4.

NOTES

STIRRUPS IN CAP MAY BE SHIFTED AS NECESSARY TO CLEAR DOWELS.

THE CONCRETE IN THE SHADED AREA OF THE WING SHALL BE POURED AFTER THE VERTICAL CONCRETE BARRIER RAIL IS CAST IF SLIP FORMING IS USED.

FOR PILE SPLICE DETAILS, SEE SHEET 4 OF 4.

FOR WING DETAILS, SEE SHEET 3 OF 4.

PROJECT NO. 17BP.4.R.85
WAYNE COUNTY
STATION: 15+05.50 -L-

SHEET 1 OF 4

NORTH CAROLINA PROFESSIONAL SEAL 020125 ENGINEER MARSHALL G. CHEEK, JR.

DocuSigned by: Marshall G. Cheek, Jr. 4/2/2018

DOCUMENT NOT CONSIDERED FINAL UNLESS ALL SIGNATURES COMPLETED

TGS ENGINEERS
804-C N. LAFAYETTE ST
SHELBY, NC 28150
PH (704) 476-0003
CORP. LICENSE NO.: C-0275

STATE OF NORTH CAROLINA
DEPARTMENT OF TRANSPORTATION
RALEIGH

SUBSTRUCTURE

END BENT No. 1

REVISIONS						
NO.	BY:	DATE:	NO.	BY:	DATE:	
1			3			
2			4			

SHEET NO. S-9
TOTAL SHEETS 15

DRAWN BY :	TBE	DATE :	3/18
CHECKED BY :	MGC	DATE :	3/18

STD. NO. EB_33_90S4

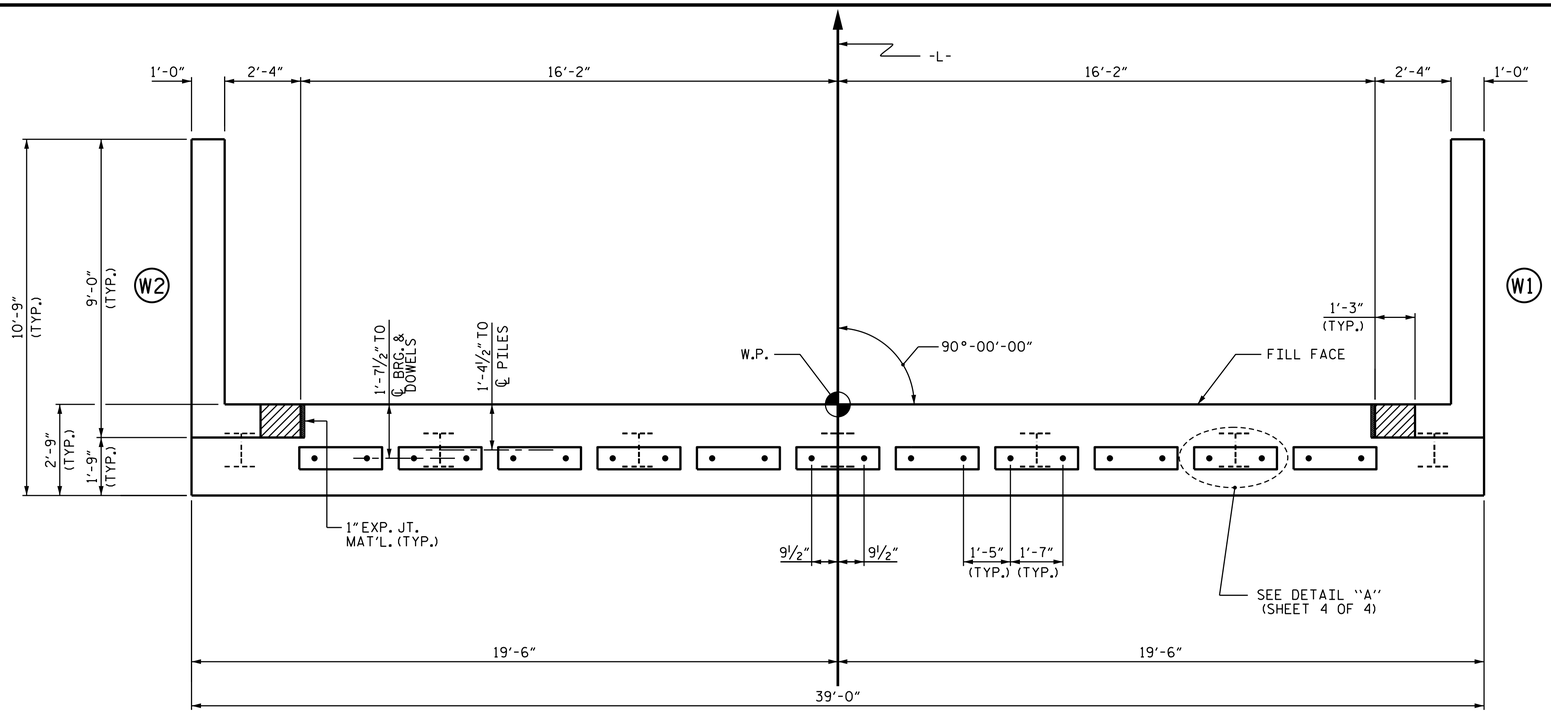

PLAN

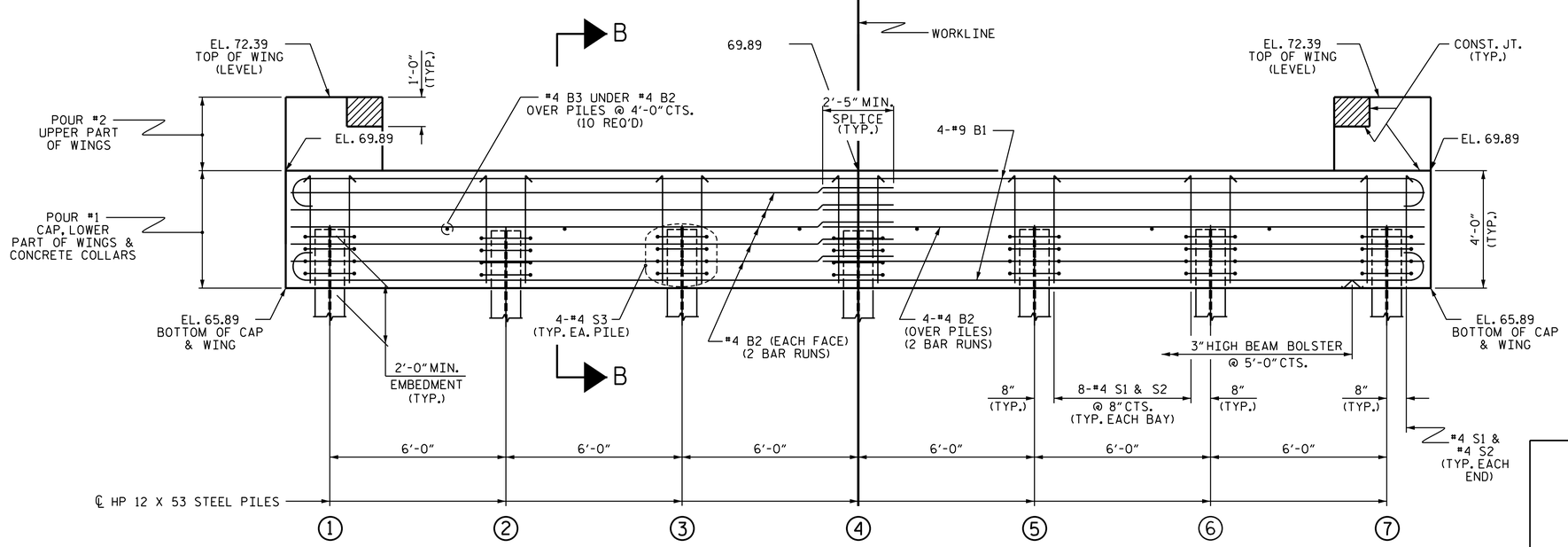

ELEVATION

WINGS NOT SHOWN FOR CLARITY.
FOR SECTION A-A, SEE SHEET 4 OF 4.
CONCRETE COLLARS FOR STEEL PILES NOT SHOWN IN PLAN AND ELEVATION VIEWS FOR CLARITY.
SEE "CORROSION PROTECTION FOR STEEL PILES DETAIL", SHEET 4 OF 4.

NOTES

STIRRUPS IN CAP MAY BE SHIFTED AS NECESSARY TO CLEAR DOWELS.

THE CONCRETE IN THE SHADED AREA OF THE WING SHALL BE POURED AFTER THE VERTICAL CONCRETE BARRIER RAIL IS CAST IF SLIP FORMING IS USED.

FOR PILE SPLICE DETAILS, SEE SHEET 4 OF 4.

FOR WING DETAILS, SEE SHEET 3 OF 4.

PROJECT NO. 17BP.4.R.85
WAYNE COUNTY
STATION: 15+05.50 -L-

SHEET 2 OF 4

NORTH CAROLINA PROFESSIONAL SEAL 020125 ENGINEER MARSHALL G. CHEEK, JR.

DocuSigned by: Marshall G. Cheek, Jr. 4/2/2018
5FBC02F3A4D0413

DOCUMENT NOT CONSIDERED FINAL UNLESS ALL SIGNATURES COMPLETED

TGS ENGINEERS
804-C N. LAFAYETTE ST
SHELBY, NC 28150
PH (704) 476-0003
CORP. LICENSE NO.: C-0275

STATE OF NORTH CAROLINA
DEPARTMENT OF TRANSPORTATION
RALEIGH

SUBSTRUCTURE

END BENT No. 2

REVISIONS							
NO.	BY:	DATE:	NO.	BY:	DATE:		
1			3				
2			4				

SHEET NO. S-10
TOTAL SHEETS 15

DRAWN BY :	TBE	DATE :	3/18
CHECKED BY :	MGC	DATE :	3/18

STD. NO. EB_33_90S4

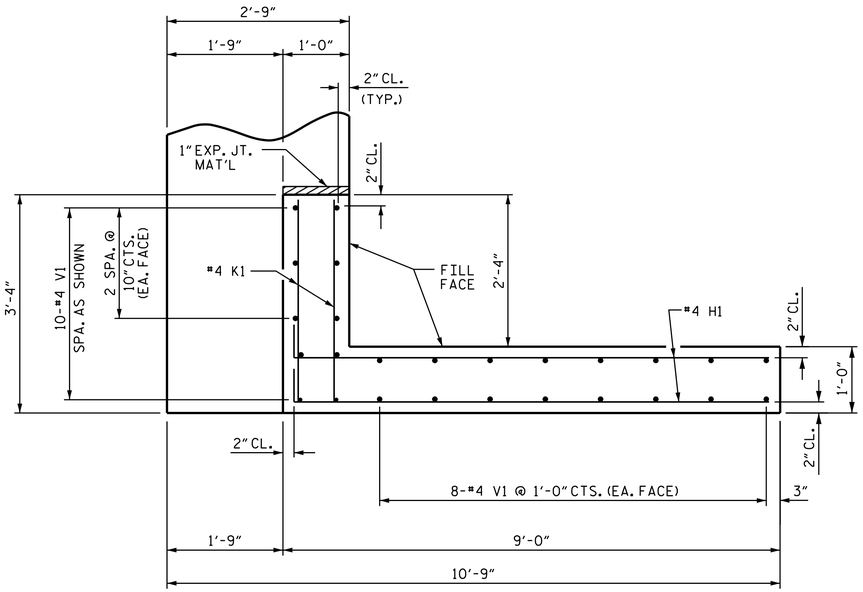

PLAN OF WING (W1)

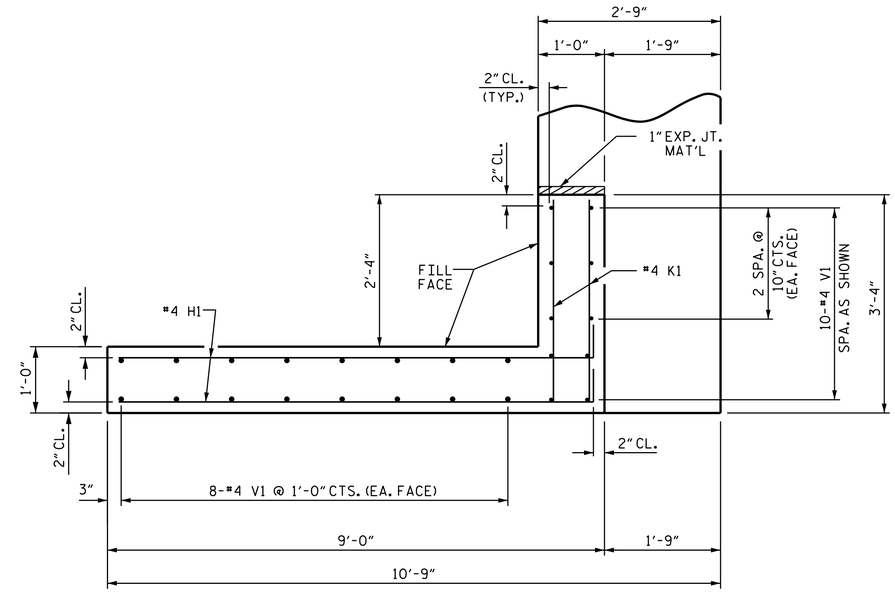

PLAN OF WING (W2)

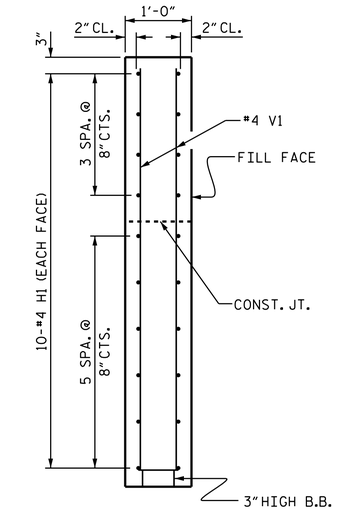

SECTION X-X

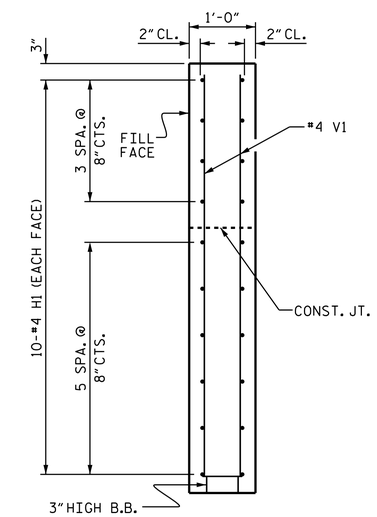

SECTION Y-Y

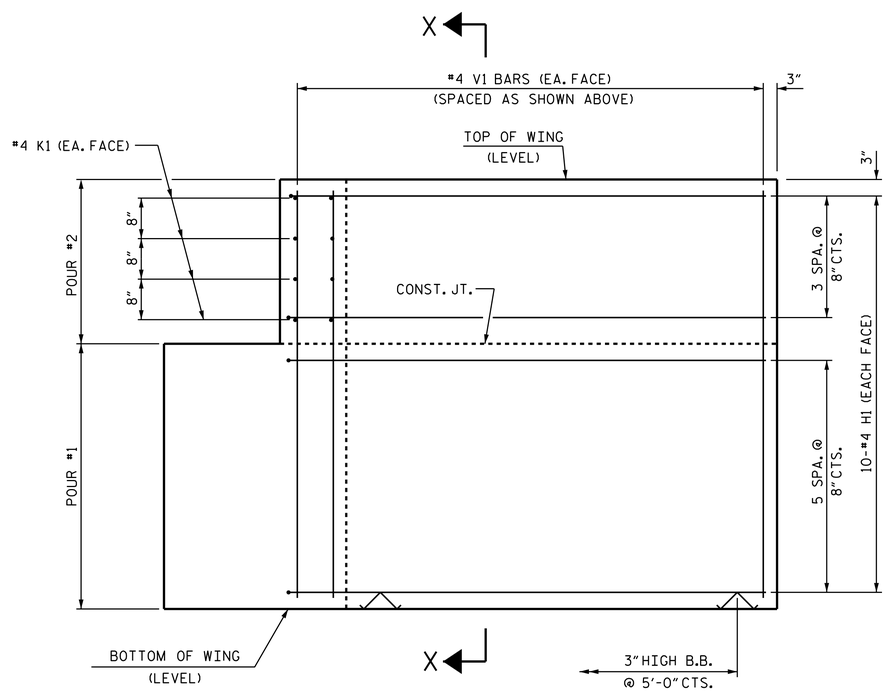

ELEVATION OF WING (W1)

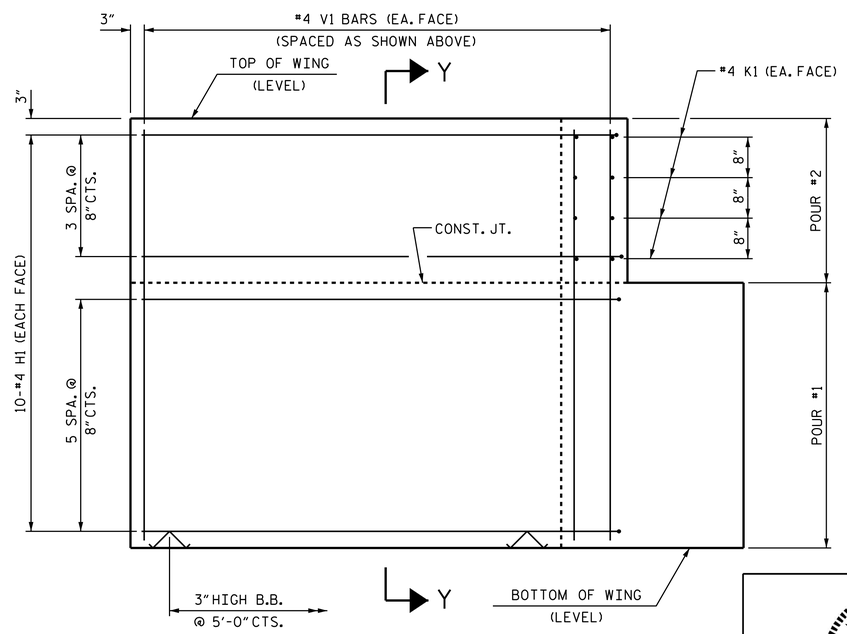

ELEVATION OF WING (W2)

WING DETAILS

PROJECT NO. 17BP.4.R.85

WAYNE COUNTY

STATION: 15+05.50 -L-

SHEET 3 OF 4

NORTH CAROLINA PROFESSIONAL SEAL 020125 ENGINEER MARSHALL G. CHEEK, JR.

DocuSigned by: Marshall G. Cheek, Jr. 4/2/2018

DOCUMENT NOT CONSIDERED FINAL UNLESS ALL SIGNATURES COMPLETED

TGS ENGINEERS
804-C N. LAFAYETTE ST
SHELBY, NC 28150
PH (704) 476-0003
CORP. LICENSE NO.: C-0275

STATE OF NORTH CAROLINA
DEPARTMENT OF TRANSPORTATION
RALEIGH

SUBSTRUCTURE

END BENT
WING DETAILS

REVISIONS						
NO.	BY:	DATE:	NO.	BY:	DATE:	
1			3			
2			4			

SHEET NO. S-11

TOTAL SHEETS 15

DRAWN BY :	TBE	DATE :	3/18
CHECKED BY :	MGC	DATE :	3/18

STD. NO. EB_33_90S4

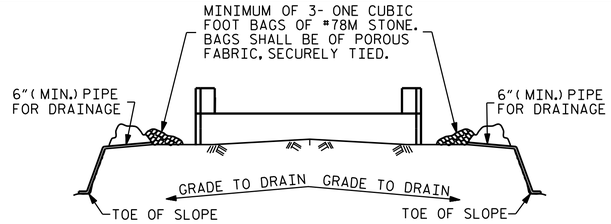

BAGGED STONE AND PIPE SHALL BE PLACED IMMEDIATELY AFTER COMPLETION OF END BENT EXCAVATION. PIPE MAY BE EITHER CONCRETE, CORRUGATED STEEL, CORRUGATED ALUMINUM ALLOY, OR CORRUGATED PLASTIC. PERFORATED PIPE WILL NOT BE ALLOWED.

BAGGED STONE SHALL REMAIN IN PLACE UNTIL THE ENGINEER DIRECTS THAT IT BE REMOVED. THE CONTRACTOR SHALL REMOVE AND DISPOSE OF SILT ACCUMULATIONS AT BAGGED STONE WHEN SO DIRECTED BY THE ENGINEER. BAGS SHALL BE REMOVED AND REPLACED WHENEVER THE ENGINEER DETERMINES THAT THEY HAVE DETERIORATED AND LOST THEIR EFFECTIVENESS.

NO SEPARATE PAYMENT WILL BE MADE FOR THIS WORK AND THE ENTIRE COST OF THIS WORK SHALL BE INCLUDED IN THE UNIT CONTRACT PRICE BID FOR THE SEVERAL PAY ITEMS.

TEMPORARY DRAINAGE AT END BENT

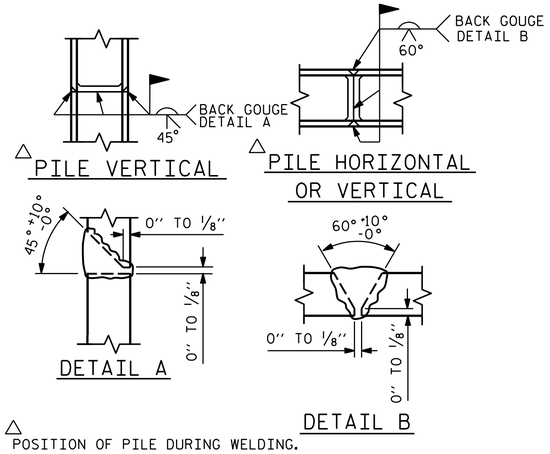

PILE SPLICE DETAILS

BAR TYPES

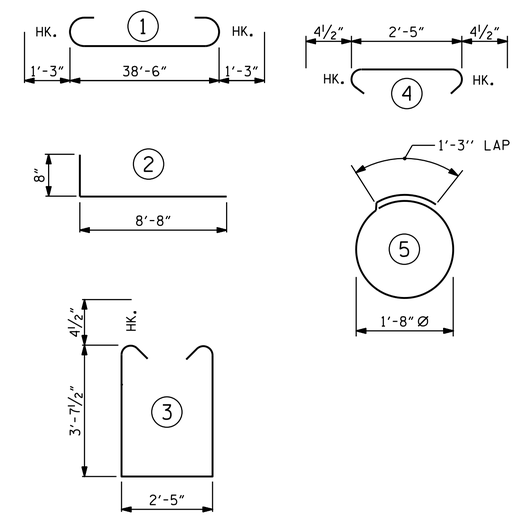

ALL BAR DIMENSIONS ARE OUT TO OUT.

END BENT No. 1	END BENT No. 2
HP 12 X 53 STEEL PILES NO: 7 LIN. FT.= 350	HP 12 X 53 STEEL PILES NO: 7 LIN. FT.= 350
PILE DRIVING EQUIPMENT SETUP FOR HP 12 X 53 STEEL PILES EACH 7	PILE DRIVING EQUIPMENT SETUP FOR HP 12 X 53 STEEL PILES EACH 7
PILE REDRIVES EACH 4	PILE REDRIVES EACH 4

BILL OF MATERIAL FOR ONE END BENT

BAR	NO.	SIZE	TYPE	LENGTH	WEIGHT
B1	8	#9	1	41'-0"	1115
B2	28	#4	STR	20'-7"	385
B3	10	#4	STR	2'-5"	16
D1	22	#6	STR	1'-6"	50
H1	40	#4	2	9'-4"	249
K1	16	#4	STR	2'-11"	31
S1	50	#4	3	10'-5"	348
S2	50	#4	4	3'-2"	106
S3	28	#4	5	6'-6"	122
V1	52	#4	STR	6'-2"	214

REINFORCING STEEL (FOR ONE END BENT) 2636 LBS.

CLASS A CONCRETE BREAKDOWN (FOR ONE END BENT)

POUR #1 CAP, LOWER PART OF WINGS & COLLARS 19.5 C.Y.

POUR #2 UPPER PART OF WINGS 2.1 C.Y.

TOTAL CLASS A CONCRETE 21.6 C.Y.

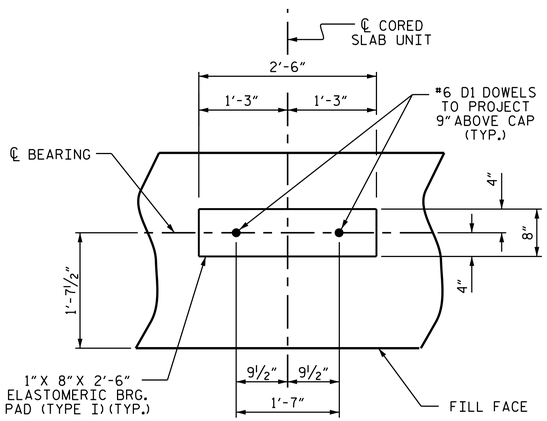

DETAIL "A"

(END BENT No. 1 SHOWN, END BENT No. 2 SIMILAR BY ROTATION)

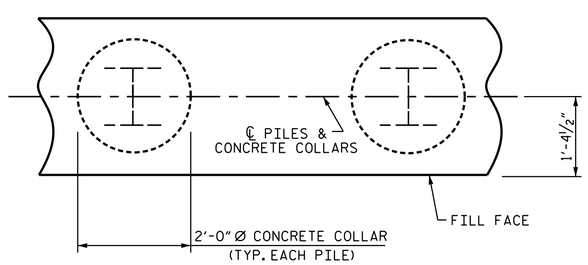

PLAN

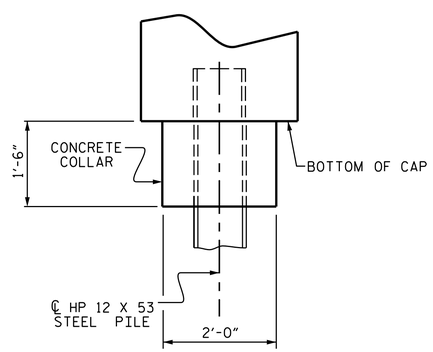

ELEVATION

CORROSION PROTECTION FOR STEEL PILES DETAIL

(END BENT No. 1 SHOWN, END BENT No. 2 SIMILAR BY ROTATION)

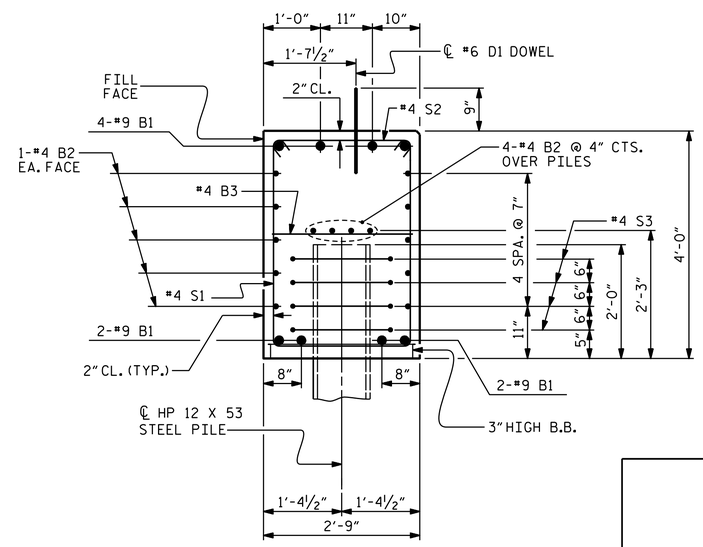

SECTION A-A

(CONCRETE COLLAR NOT SHOWN FOR CLARITY. SEE "CORROSION PROTECTION FOR STEEL PILES DETAIL.")

PROJECT NO. 17BP.4.R.85

WAYNE COUNTY

STATION: 15+05.50 -L-

SHEET 4 OF 4

NORTH CAROLINA PROFESSIONAL SEAL 020125 ENGINEER MARSHALL G. CHEEK, JR.

DocuSigned by: Marshall G. Cheek, Jr. 4/2/2018

DOCUSIGN ENVELOPE ID: 4E8F0C7C-0A8B-4F3A-B7

DOCUMENT NOT CONSIDERED FINAL UNLESS ALL SIGNATURES COMPLETED

TGS ENGINEERS
804-C N. LAFAYETTE ST
SHELBY, NC 28150
PH (704) 476-0003
CORP. LICENSE NO.: C-0275

STATE OF NORTH CAROLINA
DEPARTMENT OF TRANSPORTATION
RALEIGH

SUBSTRUCTURE

END BENT No. 1 & 2 DETAILS

REVISIONS						
NO.	BY:	DATE:	NO.	BY:	DATE:	
1			3			
2			4			

SHEET NO. S-12

TOTAL SHEETS 15

DRAWN BY :	TBE	DATE :	3/18
CHECKED BY :	MGC	DATE :	3/18

STD. NO. EB_33_90S4

NOTES :

FOR BERM WIDTH DIMENSIONS, SEE GENERAL DRAWING.

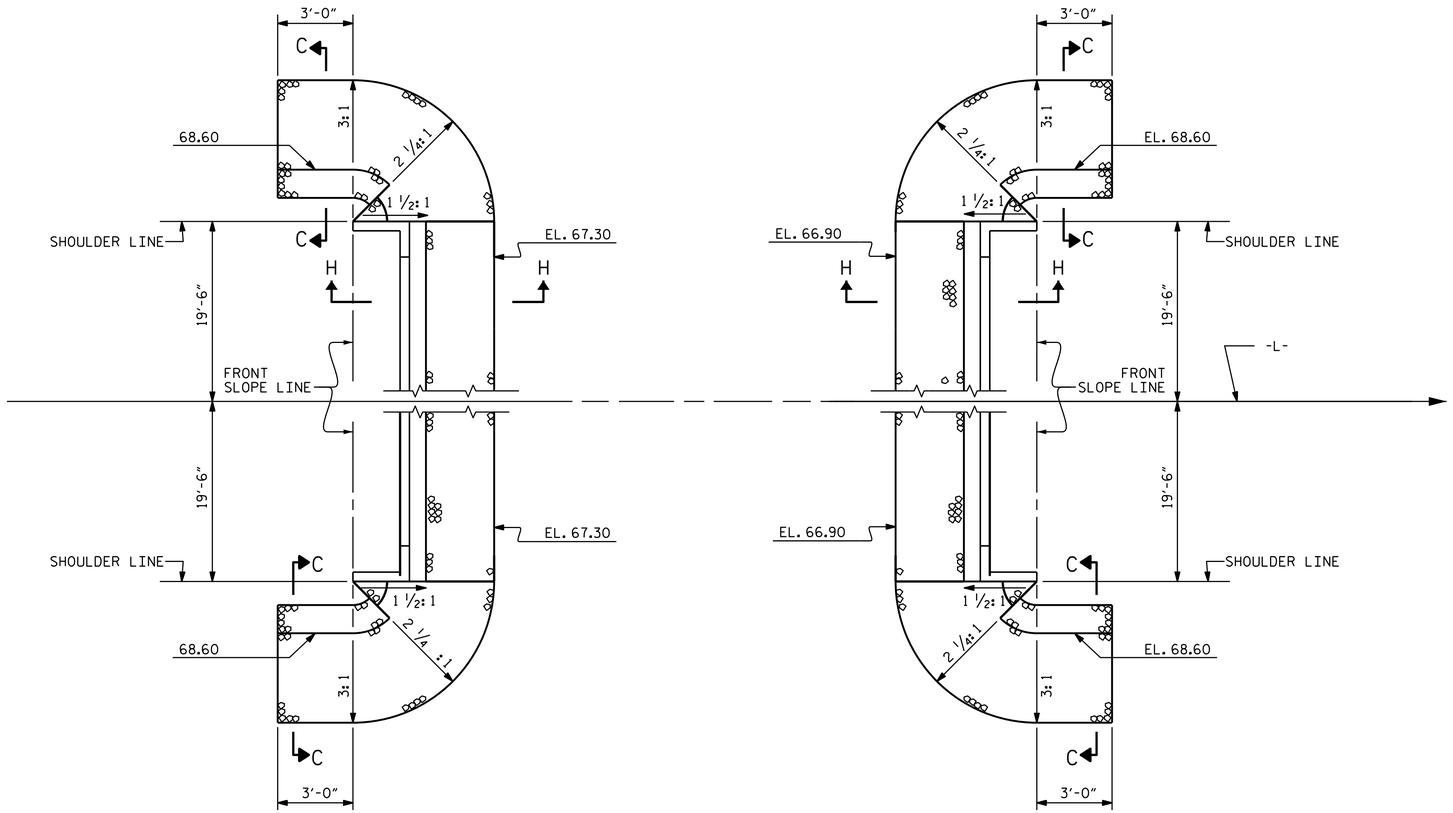

END BENT 1

END BENT 2

ESTIMATED QUANTITIES		
BRIDGE @ STA. 15+05.50 -L-	RIP RAP CLASS II	GEOTEXTILE FOR DRAINAGE
	TONS	SQUARE YARDS
END BENT 1	135	150
END BENT 2	145	160

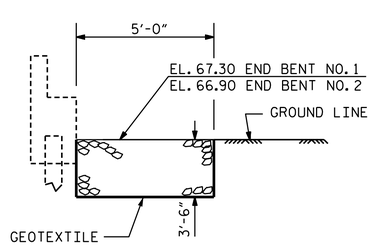

℄ SECTION

BERM RIP RAPPED

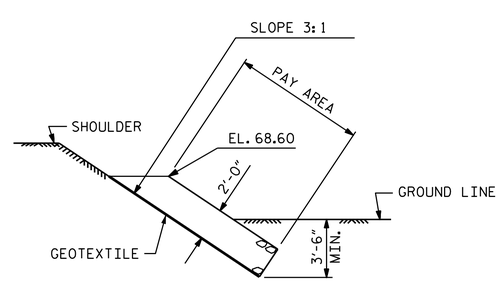

SECTION C-C

PROJECT NO. 17BP.4.R.85

WAYNE COUNTY

STATION: 15+05.50 -L-

NORTH CAROLINA PROFESSIONAL SEAL 020125 ENGINEER MARSHALL G. CHEEK, JR.

DocuSigned by: Marshall G. Cheek, Jr. 4/2/2018

DOCUMENT NOT CONSIDERED FINAL UNLESS ALL SIGNATURES COMPLETED

TGS ENGINEERS
804-C N. LAFAYETTE ST
SHELBY, NC 28150
PH (704) 476-0003
CORP. LICENSE NO.: C-0275

STATE OF NORTH CAROLINA
DEPARTMENT OF TRANSPORTATION
RALEIGH

STANDARD

RIP RAP DETAILS

REVISIONS						
NO.	BY:	DATE:	NO.	BY:	DATE:	
1			3			
2			4			

SHEET NO. S-13

TOTAL SHEETS 15

DRAWN BY :	TBE	DATE :	3/18
CHECKED BY :	MGC	DATE :	3/18

STD. NO. RR1

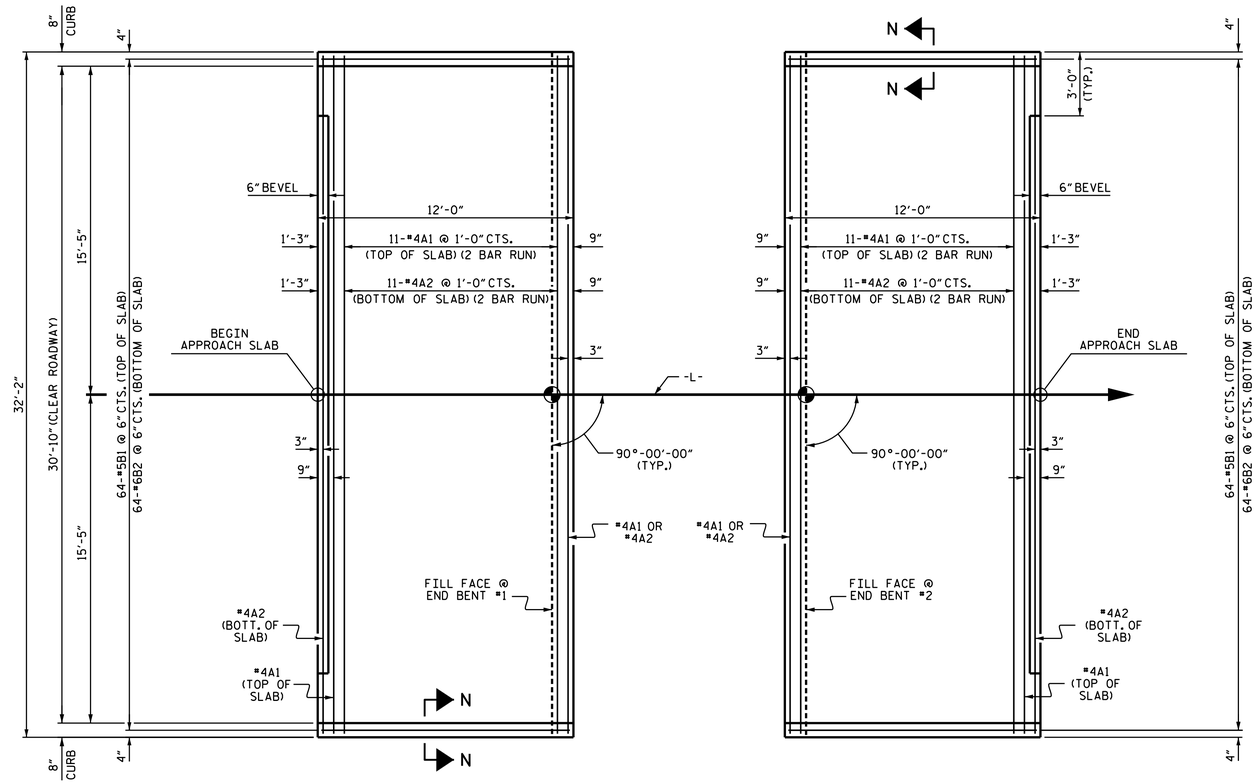

PLAN @ END BENT #1

PLAN @ END BENT #2

DIMENSIONS SHOWN ARE TYPICAL FOR BOTH APPROACH SLABS

NOTES

FOR BRIDGE APPROACH FILL INCLUDING GEOTEXTILE, 4" Ø DRAINAGE PIPE, AND SELECT MATERIAL BACKFILL, SEE ROADWAY PLANS.

GEOTEXTILE SHALL BE TYPE 1 IN ACCORDANCE WITH THE STANDARD SPECIFICATIONS SECTION 1056.

SELECT MATERIAL BACKFILL (CLASS V OR CLASS VI) SHALL BE IN ACCORDANCE WITH STANDARD SPECIFICATIONS SECTION 1016.

SELECT MATERIAL BACKFILL IS TO BE CONTINUOUS ALONG FILL FACE OF BACKWALL FROM OUTSIDE EDGE TO OUTSIDE EDGE OF APPROACH SLAB.

FOR THE 4" Ø DRAINAGE PIPE OUTLET(S), SEE ROADWAY STANDARD DRAWINGS.

AREA BETWEEN THE WINGWALL AND APPROACH SLAB SHALL BE GRADED TO DRAIN THE WATER AWAY FROM THE FILL FACE OF THE BRIDGE AND SHALL BE PAVED. SEE ROADWAY PLANS.

APPROACH SLAB GROOVING IS NOT REQUIRED.

BILL OF MATERIAL

APPROACH SLAB AT EB #1

BAR	NO.	SIZE	TYPE	LENGTH	WEIGHT
* A1	26	#4	STR	16'-11"	294
A2	26	#4	STR	16'-9"	291
.	.	.	.	.	.
* B1	64	#5	STR	11'-2"	745
B2	64	#6	STR	11'-8"	1121
REINFORCING STEEL				LBS.	1412
* EPOXY COATED . REINFORCING STEEL				LBS.	1039
CLASS AA CONCRETE				C. Y.	18.4

APPROACH SLAB AT EB #2

BAR	NO.	SIZE	TYPE	LENGTH	WEIGHT
* A1	26	#4	STR	16'-11"	294
A2	26	#4	STR	16'-9"	291
.	.	.	.	.	.
* B1	64	#5	STR	11'-2"	745
B2	64	#6	STR	11'-8"	1121
REINFORCING STEEL				LBS.	1412
* EPOXY COATED . REINFORCING STEEL				LBS.	1039
CLASS AA CONCRETE				C. Y.	18.4

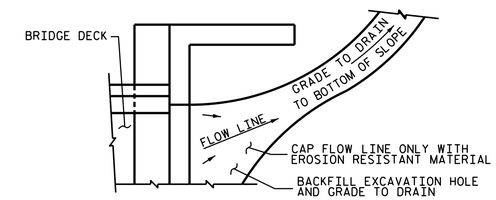

NOTE: IF THE APPROACH SLAB IS NOT CONSTRUCTED IMMEDIATELY AFTER THE BACKFILLING OF THE END BENT EXCAVATION, GRADE TO DRAIN TO THE BOTTOM OF THE SLOPE AND PROVIDE EROSION RESISTANT MATERIAL, SUCH AS FIBERGLASS ROVING OR AS DIRECTED BY THE ENGINEER TO PREVENT SOIL EROSION AND TO PROTECT THE AREA ADJACENT TO THE STRUCTURE. THE CONTRACTOR WILL BE REQUIRED TO REMOVE THESE MATERIALS PRIOR TO CONSTRUCTION OF THE APPROACH SLAB.

TEMPORARY DRAINAGE DETAIL

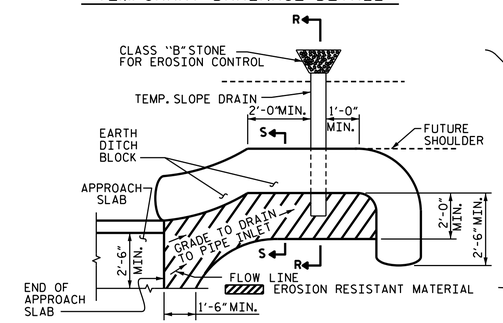

NOTE: IMMEDIATELY AFTER THE CONSTRUCTION OF THE APPROACH SLAB, THE CONTRACTOR SHALL PROVIDE TEMPORARY BERM AND SLOPE DRAIN. CONTRACTOR SHALL GRADE TO PIPE INLET AND PROVIDE EROSION RESISTANT MATERIAL AS SHOWN. THE EROSION RESISTANT MATERIAL SHALL BE EITHER 1) ASPHALT PLANT MIX, TYPE 1 OR TYPE 2, MIN. 2" DEPTH, 2) EROSION CONTROL MAT, OR 3) CONCRETE, AS DIRECTED BY THE ENGINEER. THE SLOPE DRAIN SHALL CONSIST OF A NON-PERFORATED TEMPORARY DRAINAGE PIPE, 12 INCHES IN DIAMETER.

PLAN VIEW

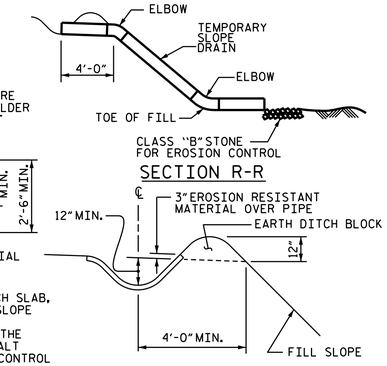

SECTION S-S

TEMPORARY BERM AND SLOPE DRAIN DETAILS

(TO BE USED WHEN SHOULDER BERM GUTTER IS REQUIRED)

SPLICE LENGTHS		
BAR SIZE	EPOXY COATED	UNCOATED
#4	2'-0"	1'-9"
#5	2'-6"	2'-2"
#6	3'-10"	2'-7"

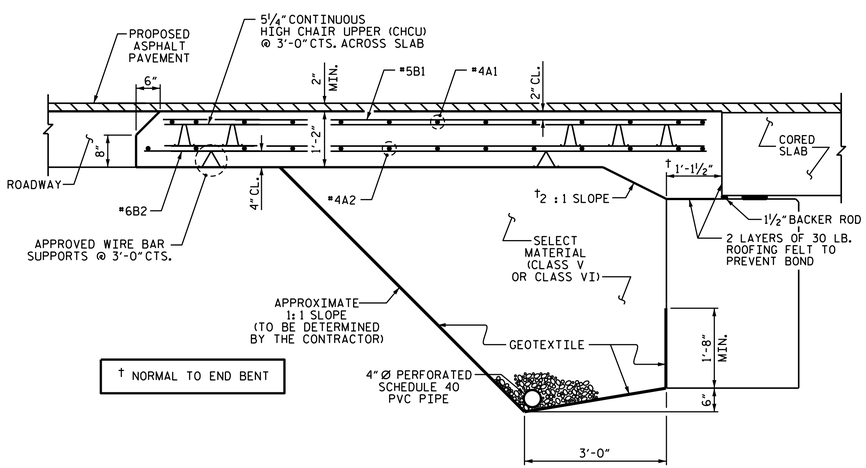

† NORMAL TO END BENT

SECTION THRU SLAB

(TYPE II - MODIFIED APPROACH FILL)

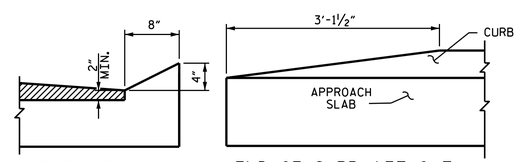

SECTION N-N

END OF CURB WITHOUT SHOULDER BERM GUTTER

CURB DETAILS

PROJECT NO. 17BP.4.R.85

WAYNE COUNTY

STATION: 15+05.50 -L-

ASSEMBLED BY :	TBE	DATE :	3/18
CHECKED BY :	MGC	DATE :	3/18
DRAWN BY : SHS/MAA	5-09	REV. 12-17	MAA/THC
CHECKED BY : BCH	5-09		

NORTH CAROLINA PROFESSIONAL SEAL 020125 ENGINEER MARSHALL G. CHEEK, JR.

DocuSigned by: Marshall G. Cheek, Jr. 4/2/2018

DOCUMENT NOT CONSIDERED FINAL UNLESS ALL SIGNATURES COMPLETED

TGS ENGINEERS
804-C N. LAFAYETTE ST
SHELBY, NC 28150
PH (704) 476-0003
CORP. LICENSE NO.: C-0275

STATE OF NORTH CAROLINA
DEPARTMENT OF TRANSPORTATION
RALEIGH

STANDARD
BRIDGE APPROACH SLAB
FOR PRESTRESSED CONCRETE
CORED SLAB UNIT
(SUB-REGIONAL TIER)
90° SKEW

REVISIONS							SHEET NO.
NO.	BY:	DATE:	NO.	BY:	DATE:		S-14
1			3				TOTAL SHEETS
2			4				15

STD. NO. BAS_33_90S

STANDARD NOTES

DESIGN DATA:

SPECIFICATIONS	A.A.S.H.T.O. (CURRENT)
LIVE LOAD	SEE PLANS
IMPACT ALLOWANCE	SEE A.A.S.H.T.O.
STRESS IN EXTREME FIBER OF	
STRUCTURAL STEEL - AASHTO M270 GRADE 36	20,000 LBS. PER SQ. IN.
- AASHTO M270 GRADE 50W	27,000 LBS. PER SQ. IN.
- AASHTO M270 GRADE 50	27,000 LBS. PER SQ. IN.
REINFORCING STEEL IN TENSION	
GRADE 60	24,000 LBS. PER SQ. IN.
CONCRETE IN COMPRESSION	1,200 LBS. PER SQ. IN.
CONCRETE IN SHEAR	SEE A.A.S.H.T.O.
STRUCTURAL TIMBER - TREATED OR	
UNTREATED - EXTREME FIBER STRESS	1,800 LBS. PER SQ. IN.
COMPRESSION PERPENDICULAR TO GRAIN OF TIMBER	375 LBS. PER SQ. IN.
EQUIVALENT FLUID PRESSURE OF EARTH	30 LBS. PER CU. FT. (MINIMUM)

MATERIAL AND WORKMANSHIP:

EXCEPT AS MAY OTHERWISE BE SPECIFIED ON PLANS OR IN THE SPECIAL PROVISIONS, ALL MATERIAL AND WORKMANSHIP SHALL BE IN ACCORDANCE WITH THE 2018 "STANDARD SPECIFICATIONS FOR ROADS AND STRUCTURES" OF THE N. C. DEPARTMENT OF TRANSPORTATION.

STEEL SHEET PILING FOR PERMANENT OR TEMPORARY APPLICATIONS SHALL BE HOT ROLLED.

CONCRETE:

UNLESS OTHERWISE REQUIRED ON PLANS, CLASS A CONCRETE SHALL BE USED FOR ALL PORTIONS OF ALL STRUCTURES WITH THE EXCEPTION THAT: CLASS AA CONCRETE SHALL BE USED IN BRIDGE SUPERSTRUCTURES, ABUTMENT BACKWALLS, AND APPROACH SLABS; AND CLASS B CONCRETE SHALL BE USED FOR SLOPE PROTECTION AND RIP RAP.

CONCRETE CHAMFERS:

UNLESS OTHERWISE NOTED ON THE PLANS, ALL EXPOSED CORNERS ON STRUCTURES SHALL BE CHAMFERED 3/4" WITH THE FOLLOWING EXCEPTIONS: TOP CORNERS OF CURBS MAY BE ROUNDED TO 1-1/2" RADIUS WHICH IS BUILT INTO CURB FORMS; CORNERS OF TRANSVERSE FLOOR EXPANSION JOINTS SHALL BE ROUNDED WITH A 1/4" FINISHING TOOL UNLESS OTHERWISE REQUIRED ON PLANS; AND CORNERS OF EXPANSION JOINTS IN THE ROADWAY FACES AND TOPS OF CURBS AND SIDEWALKS SHALL BE ROUNDED TO A 1/4" RADIUS WITH A FINISHING STONE OR TOOL UNLESS OTHERWISE REQUIRED ON PLANS.

DOWELS:

DOWELS WHEN INDICATED ON PLANS AS FOR CULVERT EXTENSIONS, SHALL BE EMBEDDED AT LEAST 12" INTO THE OLD CONCRETE AND GROUTED INTO PLACE WITH 1:2 CEMENT MORTAR.

ALLOWANCE FOR DEAD LOAD DEFLECTION, SETTLEMENT, ETC. IN CASTING SUPERSTRUCTURES:

BRIDGES SHALL BE BUILT ON THE GRADE OR VERTICAL CURVE SHOWN ON PLANS. SLABS, CURBS AND PARAPETS SHALL CONFORM TO THE GRADE OR CURVE.

ALL DIMENSIONS WHICH ARE GIVEN IN SECTION AND ARE AFFECTED BY DEAD LOAD DEFLECTIONS ARE DIMENSIONS AT CENTER LINE OF BEARING UNLESS OTHERWISE NOTED ON PLANS. IN SETTING FORMS FOR STEEL BEAM BRIDGES AND PRESTRESSED CONCRETE GIRDER BRIDGES, ADJUSTMENTS SHALL BE MADE DUE TO THE DEAD LOAD DEFLECTIONS FOR THE ELEVATIONS SHOWN. WHERE BLOCKS ARE SHOWN OVER BEAMS FOR BUILDING UP TO THE SLAB, THE VERTICAL DIMENSIONS OF THE BLOCKS SHALL BE ADJUSTED BETWEEN BEARINGS TO COMPENSATE FOR DEAD LOAD DEFLECTIONS, VERTICAL CURVE ORDINATE, AND ACTUAL BEAM CAMBER. WHERE BOTTOM OF SLAB IS IN LINE WITH BOTTOM OF TOP FLANGES, DEPTH OF SLAB BETWEEN BEARINGS SHALL BE ADJUSTED TO COMPENSATE FOR DEAD LOAD DEFLECTION, VERTICAL CURVE ORDINATE, AND ACTUAL BEAM CAMBER.

IN SETTING FALSEWORK AND FORMS FOR REINFORCED CONCRETE SPANS, AN ALLOWANCE SHALL BE MADE FOR DEAD LOAD DEFLECTIONS, SETTLEMENT OF FALSEWORK, AND PERMANENT CAMBER WHICH SHALL BE PROVIDED FOR IN ADDITION TO THE ELEVATIONS SHOWN. AFTER REMOVAL OF THE FALSEWORK, THE FINISHED STRUCTURES SHALL CONFORM TO THE PROFILE AND ELEVATIONS SHOWN ON THE PLANS AND CONSTRUCTION ELEVATIONS FURNISHED BY THE ENGINEER.

DETAILED DRAWINGS FOR FALSEWORK OR FORMS FOR BRIDGE SUPERSTRUCTURE AND ANY STRUCTURE OR PARTS OF A STRUCTURE AS NOTED ON THE PLANS SHALL BE SUBMITTED TO THE ENGINEER FOR APPROVAL BEFORE CONSTRUCTION OF THE FALSEWORK OR FORMS IS STARTED.

REINFORCING STEEL:

ALL REINFORCING STEEL SHALL BE DEFORMED. DIMENSIONS RELATIVE TO PLACEMENT OF REINFORCING ARE TO CENTERS OF BARS UNLESS OTHERWISE INDICATED IN THE PLANS. DIMENSIONS ON BAR DETAILS ARE TO CENTERS OF BARS OR ARE OUT TO OUT AS INDICATED ON PLANS.

WIRE BAR SUPPORTS SHALL BE PROVIDED FOR REINFORCING STEEL WHERE INDICATED ON THE PLANS. WHEN BAR SUPPORT PIECES ARE PLACED IN CONTINUOUS LINES, THEY SHALL BE SO PLACED THAT THE ENDS OF THE SUPPORTING WIRES SHALL BE LAPPED TO LOCK LEGS ON ADJOINING PIECES.

STRUCTURAL STEEL:

AT THE CONTRACTOR'S OPTION, HE MAY SUBSTITUTE 7/8" Ø SHEAR STUDS FOR THE 3/4" Ø STUDS SPECIFIED ON THE PLANS. THIS SUBSTITUTION SHALL BE MADE AT THE RATE OF 3 - 7/8" Ø STUDS FOR 4 - 3/4" Ø STUDS, AND STUD SPACING CHANGES SHALL BE MADE AS NECESSARY TO PROVIDE THE SAME EQUIVALENT NUMBER OF 7/8" Ø STUDS ALONG THE BEAM AS SHOWN FOR 3/4" Ø STUDS BASED ON THE RATIO OF 3 - 7/8" Ø STUDS FOR 4 - 3/4" Ø STUDS. STUDS OF THE LENGTH SPECIFIED ON THE PLANS MUST BE PROVIDED. THE MAXIMUM SPACING SHALL BE 2'-0".

EXCEPT AT THE INTERIOR SUPPORTS OF CONTINUOUS BEAMS WHERE THE COVER PLATE IS IN CONTACT WITH BEARING PLATE, THE CONTRACTOR MAY, AT HIS OPTION, SUBSTITUTE FOR THE COVER PLATES DESIGNATED ON THE PLANS COVER PLATES OF THE EQUIVALENT AREA PROVIDED THESE PLATES ARE AT LEAST 5/16" IN THICKNESS AND DO NOT EXCEED A WIDTH EQUAL TO THE FLANGE WIDTH LESS 2" OR A THICKNESS EQUAL TO 2 TIMES THE FLANGE THICKNESS. THE SIZE OF FILLET WELDS SHALL CONFORM TO THE REQUIREMENTS OF THE CURRENT ANSI/AASHTO/AWS "BRIDGE WELDING CODE". ELECTROSLAG WELDING WILL NOT BE PERMITTED.

WITH THE SOLE EXCEPTION OF EDGES AT SURFACES WHICH BEAR ON OTHER SURFACES, ALL SHARP EDGES AND ENDS OF SHAPES AND PLATES SHALL BE SLIGHTLY ROUNDED BY SUITABLE MEANS TO A RADIUS OF APPROXIMATELY 1/16 INCH OR EQUIVALENT FLAT SURFACE AT A SUITABLE ANGLE PRIOR TO PAINTING, GALVANIZING, OR METALLIZING.

HANDRAILS AND POSTS:

METAL STANDARDS AND FACES OF THE CONCRETE END POSTS FOR THE METAL RAIL SHALL BE SET NORMAL TO THE GRADE OF THE CURB, UNLESS OTHERWISE SHOWN ON PLANS. THE METAL RAIL AND TOPS OF CONCRETE POSTS USED WITH THE ALUMINUM RAIL SHALL BE BUILT PARALLEL TO THE GRADE OF THE CURB.

METAL HANDRAILS SHALL BE IN ACCORDANCE WITH THE PLANS. RAILS SHALL BE AS MANUFACTURED FOR BRIDGE RAILING. CASTINGS SHALL BE OF A UNIFORM APPEARANCE. FINS AND OTHER DEFORMATIONS RESULTING FROM CASTING OR OTHERWISE SHALL BE

BE OBTAINED. CASTINGS WITH DISCOLORATIONS OR OF NON-UNIFORM COLORING WILL NOT BE ACCEPTED. CERTIFIED MILL REPORTS ARE REQUIRED FOR METAL RAILS AND POSTS.

SPECIAL NOTES:

GENERALLY, IN CASE OF DISCREPANCY, THIS STANDARD SHEET OF NOTES SHALL GOVERN OVER THE SPECIFICATIONS, BUT THE REMAINDER OF THE PLANS SHALL GOVERN OVER NOTES HEREON, AND SPECIAL PROVISIONS SHALL GOVERN OVER ALL. SEE SPECIFICATIONS ARTICLE 105-4.

PROJECT NO. 17BP.4.R.85

WAYNE COUNTY

STATION: 15+05.50 -L-

NORTH CAROLINA PROFESSIONAL SEAL 020125 ENGINEER MARSHALL G. CHEEK, JR.

DocuSigned: Marshall G. Cheek, Jr. 4/2/2018

DOCUMENT NOT CONSIDERED FINAL UNLESS ALL SIGNATURES COMPLETED

TGS ENGINEERS
804-C N. LAFAYETTE ST
SHELBY, NC 28150
PH (704) 476-0003
CORP. LICENSE NO.: C-0275

STATE OF NORTH CAROLINA
DEPARTMENT OF TRANSPORTATION
RALEIGH

STANDARD NOTES

REVISIONS						
NO.	BY:	DATE:	NO.	BY:	DATE:	
1			3			
2			4			

SHEET NO. S-15

TOTAL SHEETS 15

DRAWN BY :	TBE	DATE :	3/18
CHECKED BY :	MGC	DATE :	3/18

STD. NO. SN