DocuSign Envelope ID: A755C5D4-3F9A-4562-B867-3759DE1C80F6

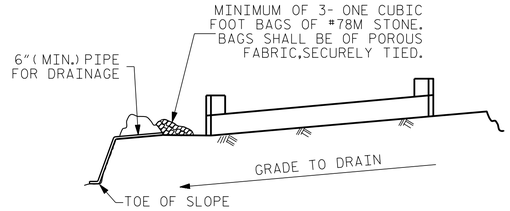

BAGGED STONE AND PIPE SHALL BE PLACED IMMEDIATELY AFTER COMPLETION OF END BENT EXCAVATION. PIPE MAY BE EITHER CONCRETE, CORRUGATED STEEL, CORRUGATED ALUMINUM ALLOY, OR CORRUGATED PLASTIC. PERFORATED PIPE WILL NOT BE ALLOWED.

BAGGED STONE SHALL REMAIN IN PLACE UNTIL THE ENGINEER DIRECTS THAT IT BE REMOVED. THE CONTRACTOR SHALL REMOVE AND DISPOSE OF SILT ACCUMULATIONS AT BAGGED STONE WHEN SO DIRECTED BY THE ENGINEER. BAGS SHALL BE REMOVED AND REPLACED WHENEVER THE ENGINEER DETERMINES THAT THEY HAVE DETERIORATED AND LOST THEIR EFFECTIVENESS.

NO SEPARATE PAYMENT WILL BE MADE FOR THIS WORK AND THE ENTIRE COST OF THIS WORK SHALL BE INCLUDED IN THE UNIT CONTRACT PRICE BID FOR THE SEVERAL PAY ITEMS.

TEMPORARY DRAINAGE AT END BENT

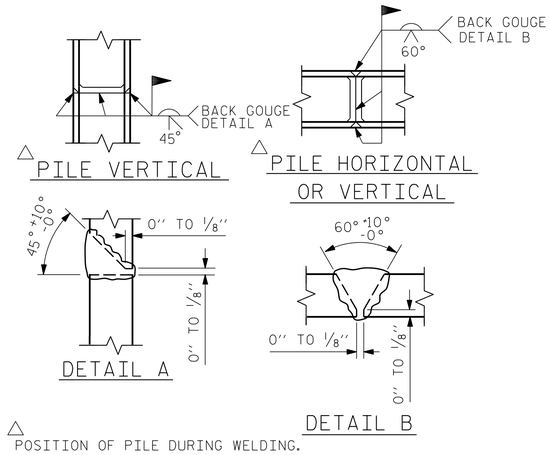

△ POSITION OF PILE DURING WELDING.

PILE SPLICE DETAILS

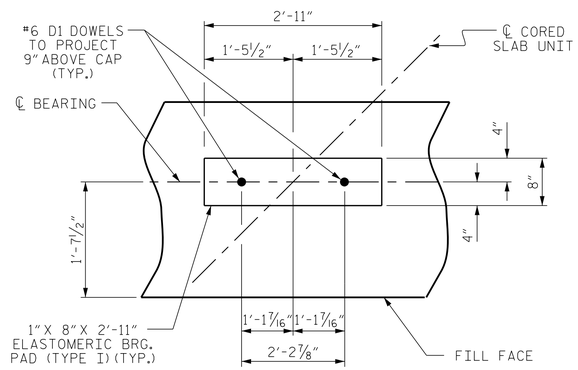

DETAIL "A"

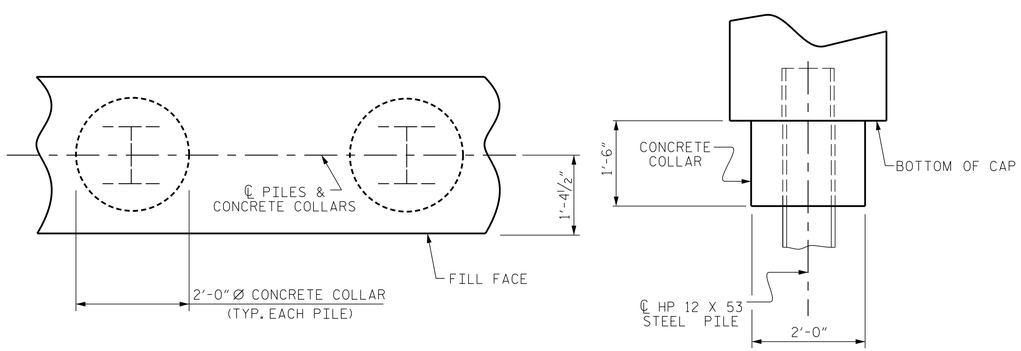

CORROSION PROTECTION FOR STEEL PILES DETAIL

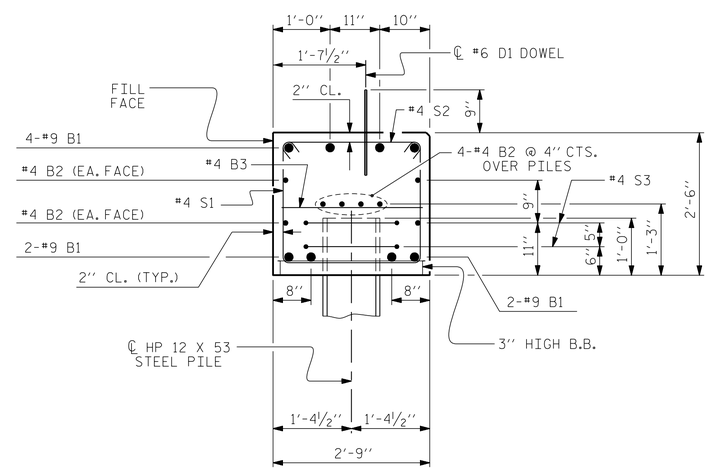

SECTION A-A

(CONCRETE COLLAR NOT SHOWN FOR CLARITY. SEE "CORROSION PROTECTION FOR STEEL PILES DETAIL.")

BAR TYPES

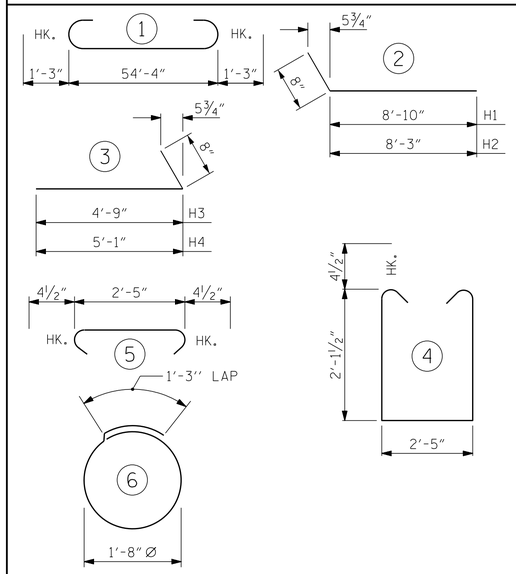

ALL BAR DIMENSIONS ARE OUT TO OUT.

BILL OF MATERIAL

END BENT No. 1

BAR	NO.	SIZE	TYPE	LENGTH	WEIGHT
B1	8	#9	1	56'-10"	1546
B2	16	#4	STR	28'-7"	305
B3	14	#4	STR	2'-5"	23
D1	22	#6	STR	1'-6"	50
H1	6	#4	2	9'-6"	38
H2	6	#4	2	8'-11"	36
H3	6	#4	3	5'-3"	21
H4	6	#4	3	5'-9"	23
K1	12	#4	STR	4'-1"	33
S1	74	#4	4	7'-5"	367
S2	74	#4	5	3'-2"	157
S3	14	#4	6	6'-6"	61
V1	50	#4	STR	4'-10"	161

REINFORCING STEEL 2,821 LBS.

CLASS A CONCRETE BREAKDOWN

POUR #1 CAP, LOWER PART OF WINGS & COLLARS 16.4 C.Y.

POUR #2 UPPER PART OF WINGS 2.2 C.Y.

TOTAL CLASS A CONCRETE 18.6 C.Y.

HP 12 X 53 STEEL PILES
NO: 7 LIN. FT.= 420

PILE DRIVING EQUIPMENT SETUP FOR HP 12 X 53 STEEL PILES NO: 7

PILE REDRIVES NO: 4

PROJECT NO. 17BP.4.R.82
EDGECOMBE COUNTY
STATION: 16+56.00 -L-

SHEET 3 OF 3

ENGINEER OF RECORD
DocuSigned by: John Arthur Dilworth
NORTH CAROLINA PROFESSIONAL SEAL 22072 ENGINEER JOHN ARTHUR DILWORTH
4/9/2018

WETHERILL ENGINEERING
1223 Jones Franklin Rd.
Raleigh, N.C. 27606
Bus: 919 851 8077
Fax: 919 851 8107
LICENSE NO. F-0377

STATE OF NORTH CAROLINA
DEPARTMENT OF TRANSPORTATION
RALEIGH

SUBSTRUCTURE

END BENT No. 1
DETAILS

REVISIONS						SHEET NO.
NO.	BY:	DATE:	NO.	BY:	DATE:	S-10
1			3			TOTAL SHEETS
2			4			S-19

DRAWN BY : J. PENDERGRAFT DATE : 10/17
CHECKED BY : J. DILWORTH DATE : 11/17

DOCUMENT NOT CONSIDERED FINAL UNLESS ALL SIGNATURES COMPLETED

P:\2017\17108.01_EDGECOMBE_47\Structures\DGN\EDGECOMBE 47 EBT.dgn
3/28/2018 9:36:29 AM