DocuSign Envelope ID: 9DCE586D-B0BE-4B71-B8E5-D753F02DE37A

6/2/99

DOCUMENT NOT CONSIDERED FINAL UNLESS ALL SIGNATURES COMPLETED

PROJECT REFERENCE NO.	SHEET NO.
17BP.4.R.82	2A-1

ROADWAY DESIGN ENGINEER
Docusigned by: Greg S. Purvis
NORTH CAROLINA PROFESSIONAL SEAL 022999 ENGINEER GREG S. PURVIS
4/6/2018

PAVEMENT DESIGN ENGINEER
Docusigned by: Corey D. McLamb
NORTH CAROLINA PROFESSIONAL SEAL 32142 ENGINEER COREY D. McLAMB
4/6/2018

WETHERILL ENGINEERING
559 Jones Franklin Rd. Suite 164
Raleigh, N.C. 27606
License No. F-0377
Bus: 919 851 8077
Fax: 919 851 8107
TRANSPORTATION PLANNING/DESIGN - BRIDGE/STRUCTURE DESIGN
CIVIL/SITE DESIGN - GIS/GPS - CONSTRUCTION OBSERVATION

BRIDGE #320047

PAVEMENT SCHEDULE

C1	PROP. APPROX. 3″ ASPHALT CONCRETE SURFACE COURSE, TYPE S9.5B, AT AN AVERAGE RATE OF 168 LBS. PER SQ. YD. IN EACH OF TWO LAYERS.
C2	PROP. VAR. DEPTH ASPHALT CONCRETE SURFACE COURSE, TYPE S9.5B, AT AN AVERAGE RATE OF 112 LBS. PER SQ. YD. PER 1″ DEPTH. TO BE PLACED IN LAYERS NOT TO EXCEED 1½″ IN DEPTH.
E1	PROP. APPROX. 4″ ASPHALT CONCRETE BASE COURSE, TYPE B25.0C, AT AN AVERAGE RATE OF 456 LBS. PER SQ. YD.
E2	PROP. VAR. DEPTH ASPHALT CONCRETE BASE COURSE, TYPE B25.0C, AT AN AVERAGE RATE OF 114 LBS. PER SQ. YD. PER 1″ DEPTH. TO BE PLACED IN LAYERS NOT LESS THAN 3″ IN DEPTH OR GREATER THAN 5½″ IN DEPTH.
R1	SHOULDER BERM GUTTER
T	EARTH MATERIAL.
U	EXISTING PAVEMENT.
V	MILLING BITUMINOUS PAVEMENT. (SEE MILLING DETAIL)
W	VARIABLE DEPTH ASPHALT PAVEMENT (SEE WEDGING DETAIL)

NOTE: PAVEMENT EDGE SLOPES ARE 1:1 UNLESS SHOWN OTHERWISE.

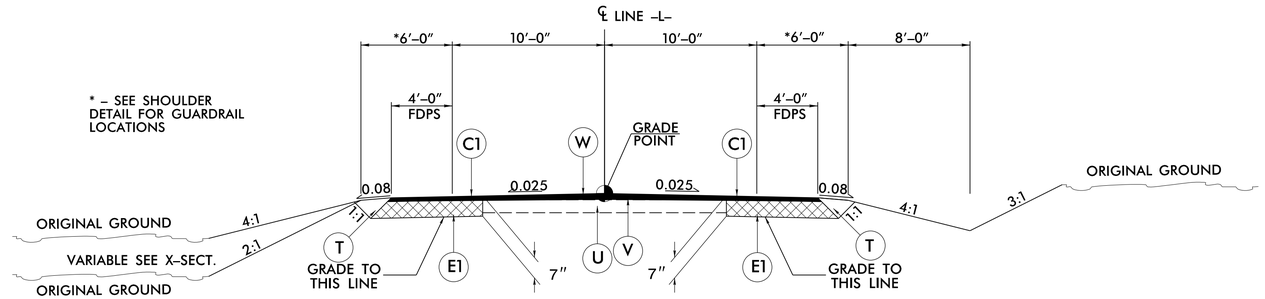

TYPICAL SECTION NO. 1

USE TYPICAL SECTION NO. 1 AS FOLLOWS:
-L- STA. 11+00.00 TO -L- STA. 15+36.00
-L- STA. 17+76.00 TO -L- STA. 19+01.00

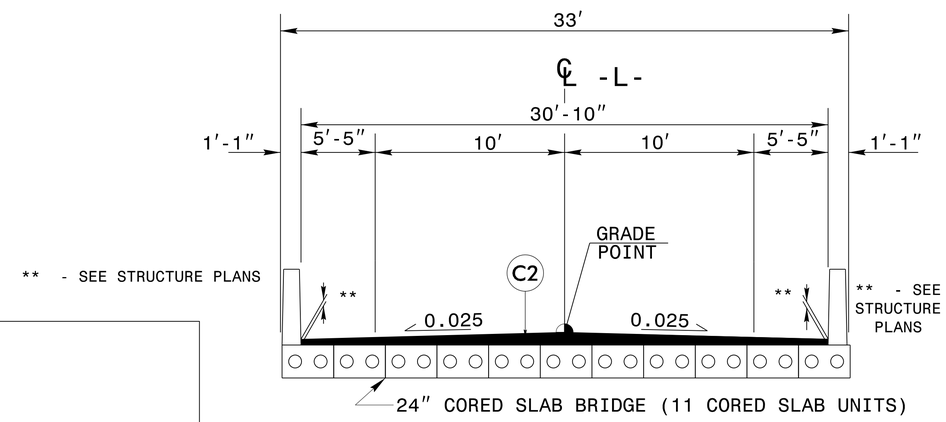

TYPICAL SECTION NO. 3

USE TYPICAL SECTION NO. 3 AS FOLLOWS:
-L- STA. 15+64.23 (BEGIN BRIDGE) TO -L- STA. 17+47.77 (END BRIDGE)

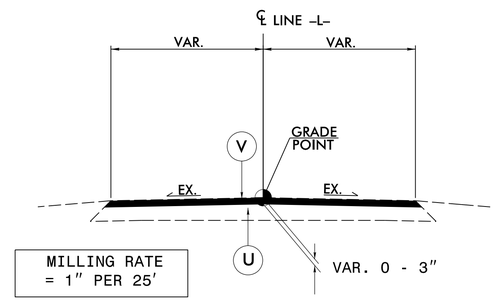

V: MILLING DETAIL

USE MILLING DETAIL AS FOLLOWS:
-L- STA. 11+00.00 TO -L- STA. 13+25.00
-L- STA. 18+61.00 TO -L- STA. 19+01.00

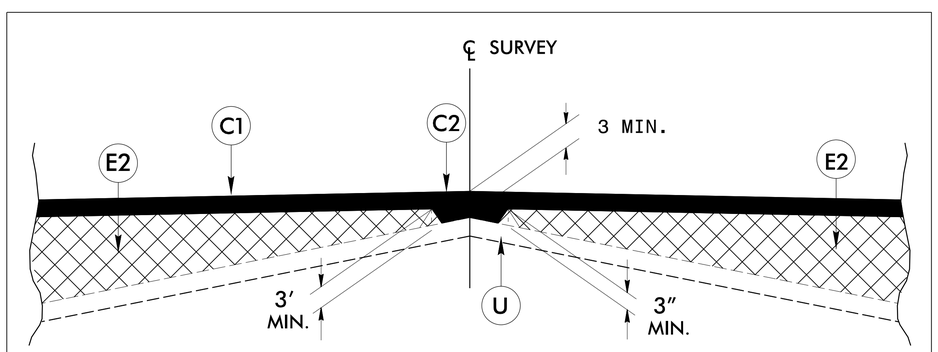

W: Detail Showing Method of Wedging

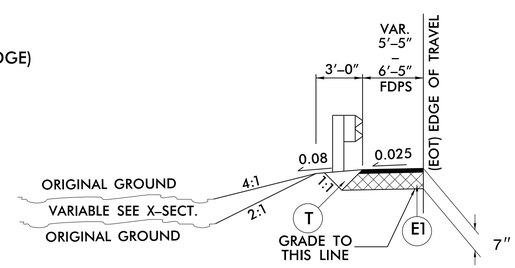

SHOULDER DETAIL

USE SHOULDER DETAIL IN CONJUNCTION WITH TYPICAL SECTIONS NO. 1 & 2:
-L- STA. 14+19.33 TO -L- STA. 15+50.58 LT.
-L- STA. 14+62.67 TO -L- STA. 15+81.42 RT.
-L- STA. 17+30.58 TO -L- STA. 18+49.33 LT.
-L- STA. 17+61.42 TO -L- STA. 18+36.42 RT.

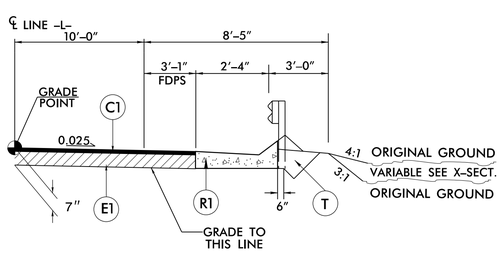

SHOULDER BERM GUTTER DETAIL

USE SHOULDER BERM GUTTER DETAIL IN CONJUNCTION WITH TYPICAL SECTIONS NO. 1 & 2:
-L- STA. 15+27.00 TO -L- STA. 15+70.42 RT.
-L- STA. 14+73.00 TO -L- STA. 15+39.58 LT.

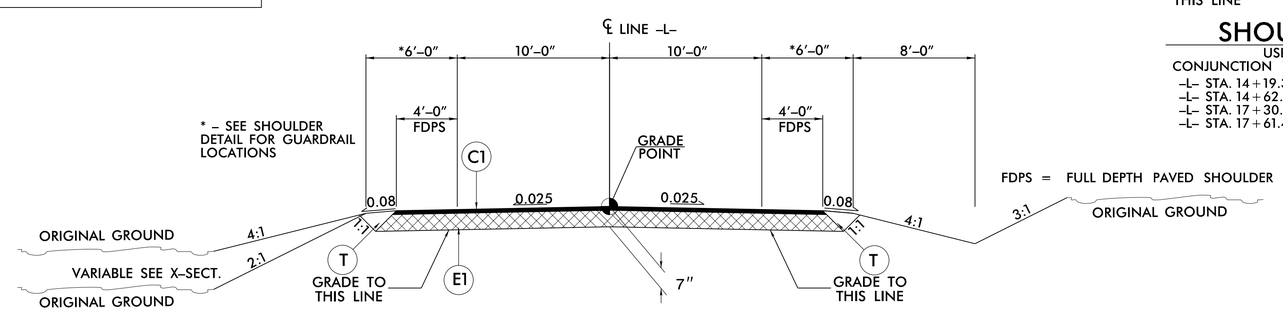

TYPICAL SECTION NO. 2

-L- STA. 15+36.00 TO -L- STA. 15+64.23 (BEGIN BRIDGE)
-L- STA. 17+47.77 (END BRIDGE) TO -L- STA. 17+76.00

4/6/2018
BR_320047_Rdy_typ.dgn
USER:kaspendu