DocuSign Envelope ID: A755C5D4-3F9A-4562-B867-3759DE1C80F6

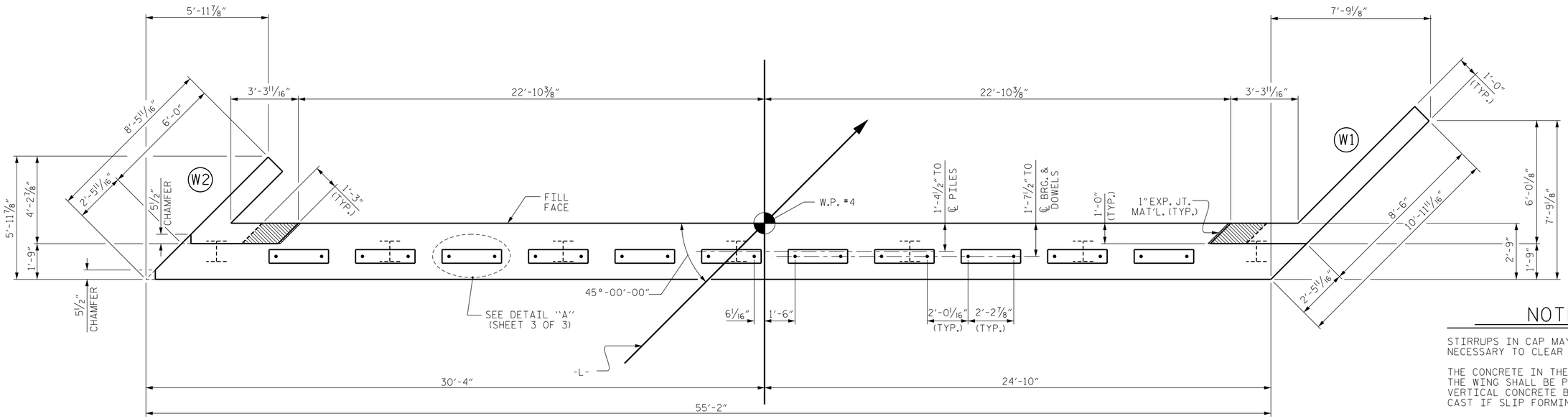

PLAN

NOTES

STIRRUPS IN CAP MAY BE SHIFTED AS NECESSARY TO CLEAR DOWELS.

THE CONCRETE IN THE SHADED AREA OF THE WING SHALL BE POURED AFTER THE VERTICAL CONCRETE BARRIER RAIL IS CAST IF SLIP FORMING IS USED.

FOR PILE SPLICE DETAILS, SEE SHEET 3 OF 3.

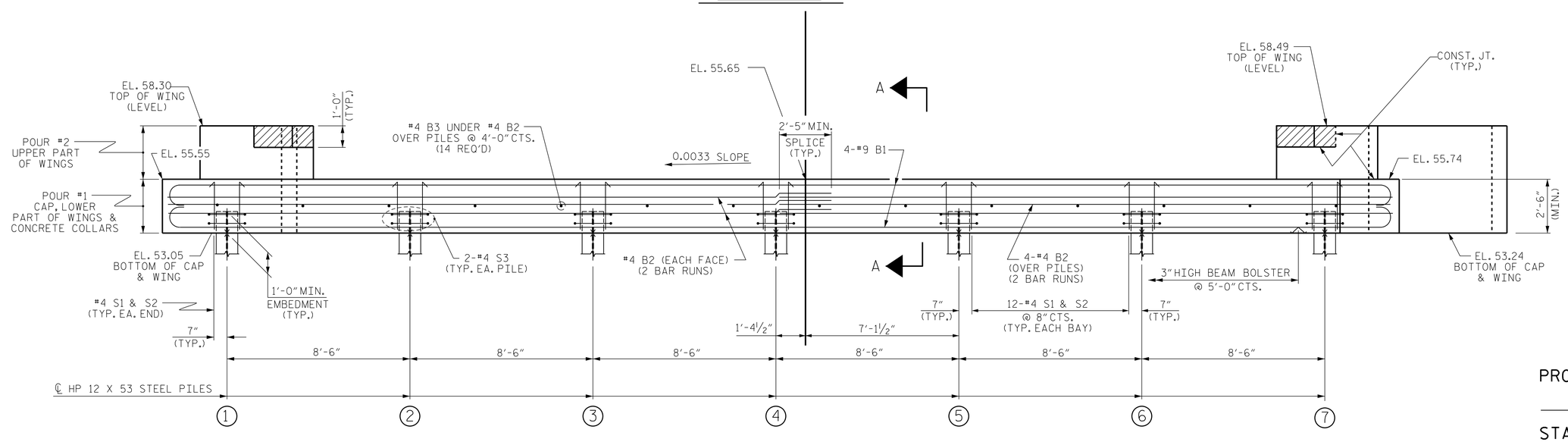

ELEVATION

FOR SECTION A-A, SEE SHEET 3 OF 3.
CONCRETE COLLARS FOR STEEL PILES NOT SHOWN IN PLAN AND ELEVATION VIEWS FOR CLARITY.
SEE "CORROSION PROTECTION FOR STEEL PILES DETAIL", SHEET 3 OF 3.

TOP OF PILE ELEVATIONS	
1	54.06
2	54.09
3	54.12
4	54.15
5	54.17
6	54.20
7	54.23

PROJECT NO. 17BP.4.R.82
EDGECOMBE COUNTY
STATION: 16+56.00 -L-

SHEET 1 OF 3

ENGINEER OF RECORD
DocuSigned by:
John Arthur Dilworth
6213D0D0D0D0D0D...
NORTH CAROLINA PROFESSIONAL SEAL 22072 ENGINEER JOHN ARTHUR DILWORTH
4/9/2018

WETHERILL ENGINEERING
1223 Jones Franklin Rd.
Raleigh, N.C. 27606
Bus: 919 851 8077
Fax: 919 851 8107
LICENSE NO. F-0377

STATE OF NORTH CAROLINA
DEPARTMENT OF TRANSPORTATION
RALEIGH

SUBSTRUCTURE
END BENT No. 2

REVISIONS							
NO.	BY:	DATE:	NO.	BY:	DATE:		
1			3				
2			4				

SHEET NO. S-15
TOTAL SHEETS S-19

DRAWN BY : J. PENDERGRAFT DATE : 10/17
CHECKED BY : J. DILWORTH DATE : 11/17

DOCUMENT NOT CONSIDERED FINAL UNLESS ALL SIGNATURES COMPLETED

P:\2017\17108.0.1_EDGECOMBE_47\Structures\DGN\EDGECOMBE_47_EBT.dgn
3/28/2018 9:51:09 AM