DocuSign Envelope ID: A755C5D4-3F9A-4562-B867-3759DE1C80F6

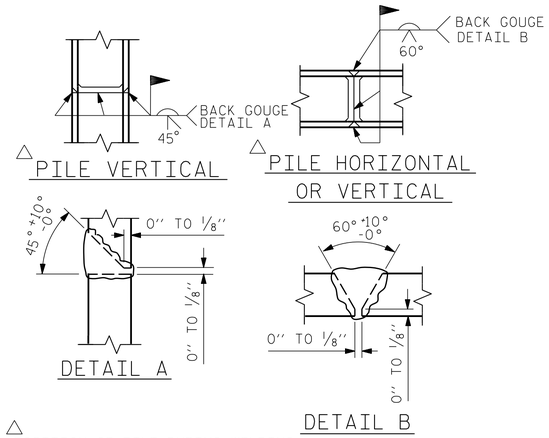

△ POSITION OF PILE DURING WELDING.

PILE SPLICE DETAILS

BAR TYPES

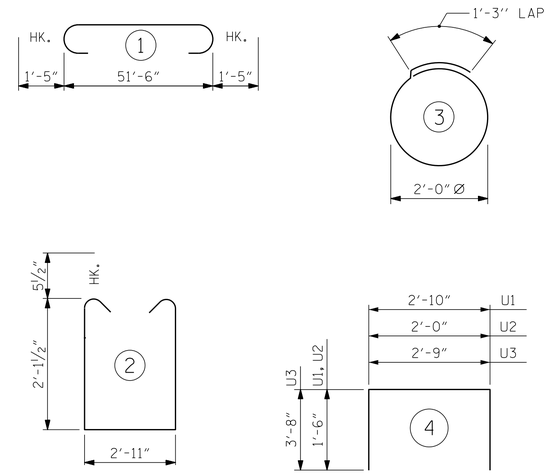

ALL BAR DIMENSIONS ARE OUT TO OUT.

BILL OF MATERIAL

BENT 2

BAR	NO.	SIZE	TYPE	LENGTH	WEIGHT
B1	4	#10	1	54'-4"	935
B2	4	#10	STR	51'-8"	889
B3	4	#5	STR	51'-8"	216
B4	8	#4	STR	27'-1"	145
B5	13	#4	STR	2'-11"	25
D1	44	#6	STR	1'-6"	99
S1	52	#5	2	8'-1"	438
S2	18	#4	3	7'-7"	91
U1	4	#4	4	5'-10"	16
U2	6	#4	4	5'-0"	20
U3	2	#9	4	10'-1"	69

REINFORCING STEEL 2943 LBS

CLASS A CONCRETE BREAKDOWN

TOTAL CLASS A CONCRETE 15.6 C.Y.

HP 14 X 73 GALVANIZED STEEL PILES

No. 9 LIN. FT. 630

PILE DRIVING EQUIPMENT SETUP FOR HP 14 X 73 GALVANIZED STEEL PILES

NO: 9

PILE REDRIVES NO: 5

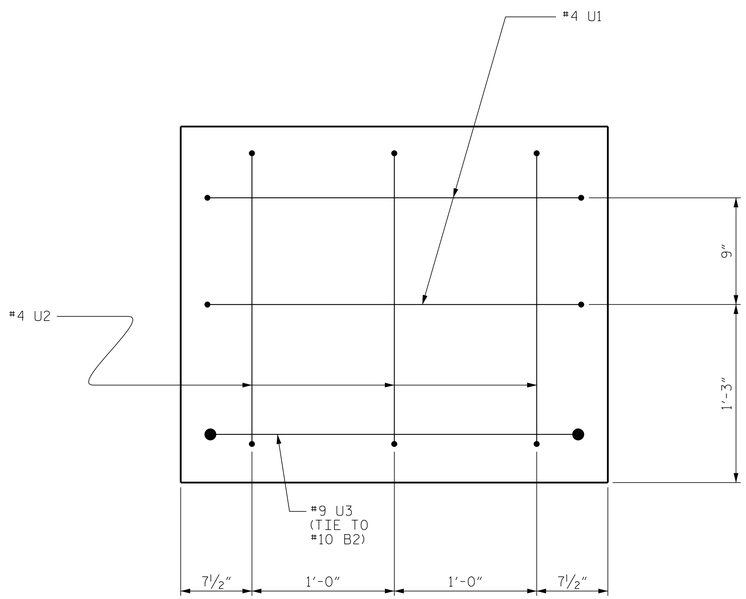

END OF CAP VIEW

(TYPICAL BOTH ENDS)

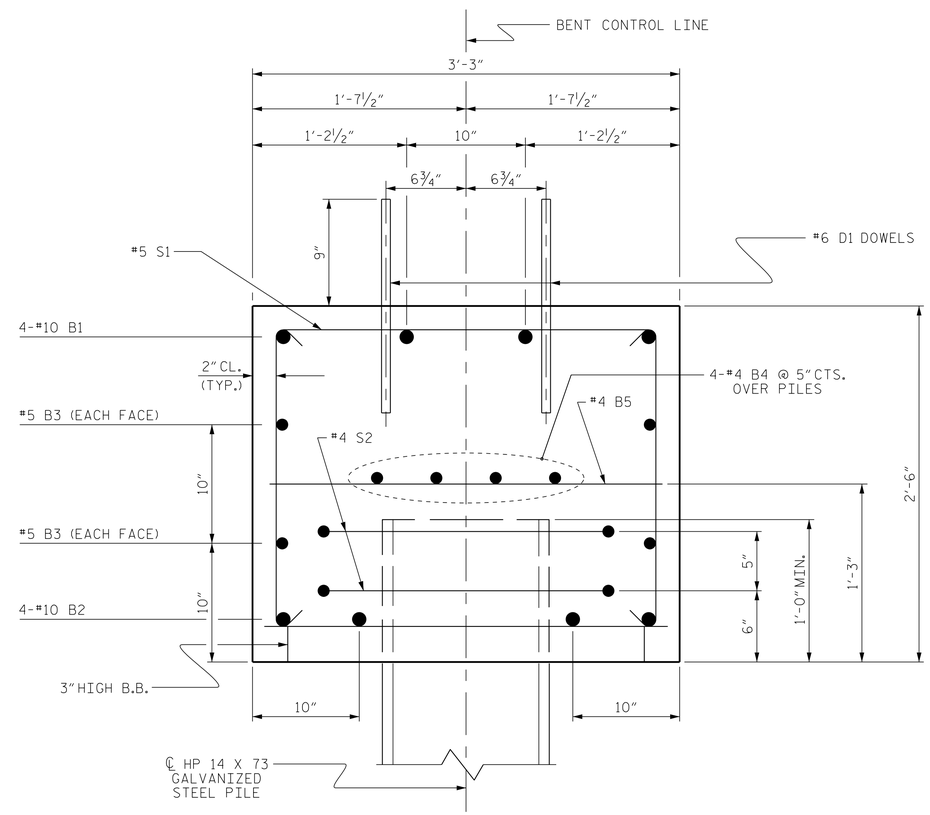

SECTION A-A

PROJECT NO. 17BP.4.R.82

EDGECOMBE COUNTY

STATION: 16+56.00 -L-

SHEET 2 OF 2

ENGINEER OF RECORD

DocuSigned by: John Arthur Dilworth

NO. PROFESSIONAL SEAL 22072 ENGINEER JOHN ARTHUR DILWORTH NORTH CAROLINA

4/9/2018

WETHERILL ENGINEERING

1223 Jones Franklin Rd.
Raleigh, N.C. 27606
Bus: 919 851 8077
Fax: 919 851 8107
LICENSE NO. F-0377

STATE OF NORTH CAROLINA
DEPARTMENT OF TRANSPORTATION
RALEIGH

SUBSTRUCTURE

BENT No. 2

REVISIONS						SHEET NO.
NO.	BY:	DATE:	NO.	BY:	DATE:	S-14
1			3			TOTAL SHEETS
2			4			S-19

DOCUMENT NOT CONSIDERED FINAL UNLESS ALL SIGNATURES COMPLETED

DRAWN BY : J. PENDERGRAFT DATE : 10-17
CHECKED BY : J. DILWORTH DATE : 11-17

P:\2017\17108.01_EDGECOMBE_47\Structures\DGN\EDGECOMBE 47 BT.dgn
3/28/2018 9:48:55 AM