DocuSign Envelope ID: A755C5D4-3F9A-4562-B867-3759DE1C80F6

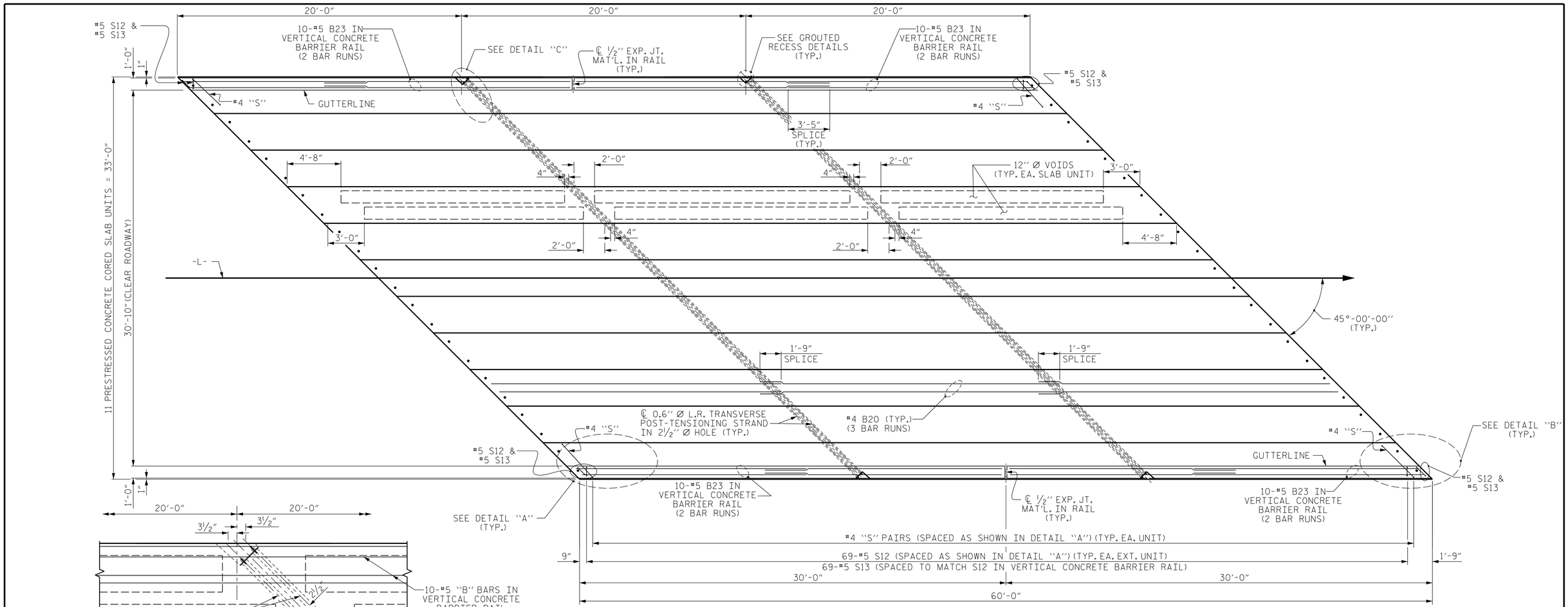

PLAN OF UNIT

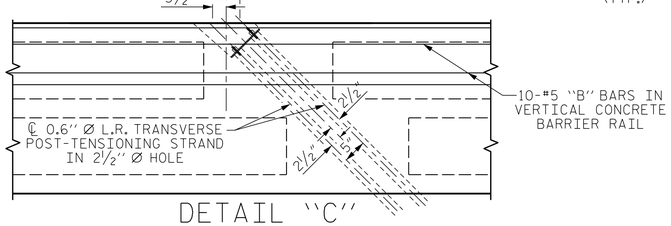

DETAIL "C"

#4 S11 BARS MAY BE SHIFTED AS NECESSARY TO MAINTAIN 1" CLEAR TO GROUTED RECESS AND 2 1/2" Ø TRANSVERSE POST-TENSIONING STRAND HOLES

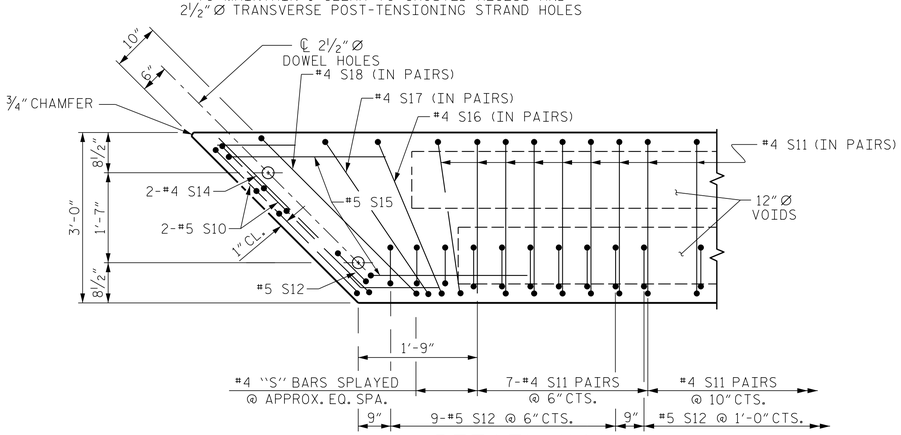

DETAIL "A"

NOTE: EXTERIOR UNIT SHOWN - INTERIOR UNIT SIMILAR EXCEPT OMIT #5 S12 BARS.

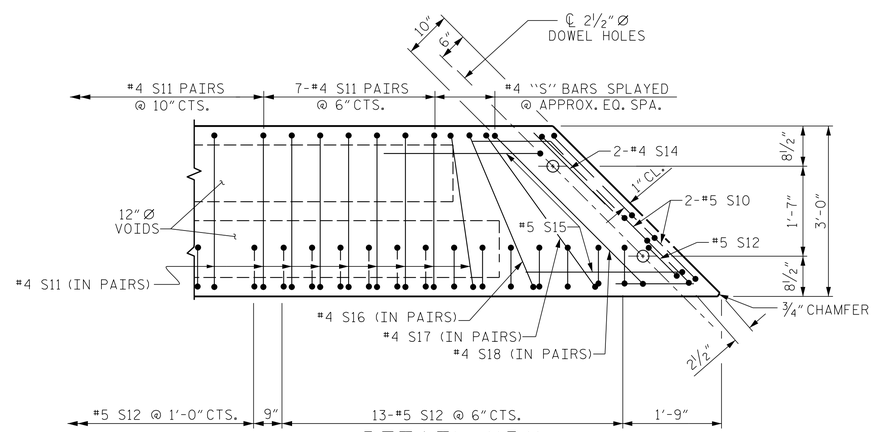

DETAIL "B"

NOTE: EXTERIOR UNIT SHOWN - INTERIOR UNIT SIMILAR EXCEPT OMIT #5 S12 BARS.

PROJECT NO. 17BP.4.R.82

EDGECOMBE COUNTY

STATION: 16+56.00 -L-

SHEET 2 OF 3

ENGINEER OF RECORD

DocuSigned by: John Arthur Dilworth

NORTH CAROLINA PROFESSIONAL SEAL 22072 ENGINEER JOHN ARTHUR DILWORTH

4/9/2018

WETHERILL ENGINEERING

1223 Jones Franklin Rd.
Raleigh, N.C. 27606
Bus: 919 851 8077
Fax: 919 851 8107
LICENSE NO. F-0377

STATE OF NORTH CAROLINA
DEPARTMENT OF TRANSPORTATION
RALEIGH

PLAN OF 60' UNIT
30'-10" CLEAR ROADWAY
45° SKEW

REVISIONS							SHEET NO.
NO.	BY:	DATE:	NO.	BY:	DATE:		S-5
1			3				TOTAL SHEETS
2			4				S-19

DRAWN BY : J. PENDERGRAFT DATE : 10-17

CHECKED BY : J. DILWORTH DATE : 10-17

DOCUMENT NOT CONSIDERED FINAL UNLESS ALL SIGNATURES COMPLETED

P:\20170\17108.01_EDGECOMBE_47\Structures\DGN\EDGECOMBE 47 PS.dgn
3/28/2018 9:10:52 AM