DocuSign Envelope ID: A755C5D4-3F9A-4562-B867-3759DE1C80F6

NOTES

STIRRUPS IN CAP MAY BE SHIFTED AS NECESSARY TO CLEAR DOWELS.

★ INVERT ALTERNATE STIRRUPS.

GALVANIZE THE TOP OF EACH INTERIOR BENT PILE A MINIMUM OF 35 FEET. GALVANIZE IN ACCORDANCE WITH SECTION 1076 OF THE STANDARD SPECIFICATIONS.

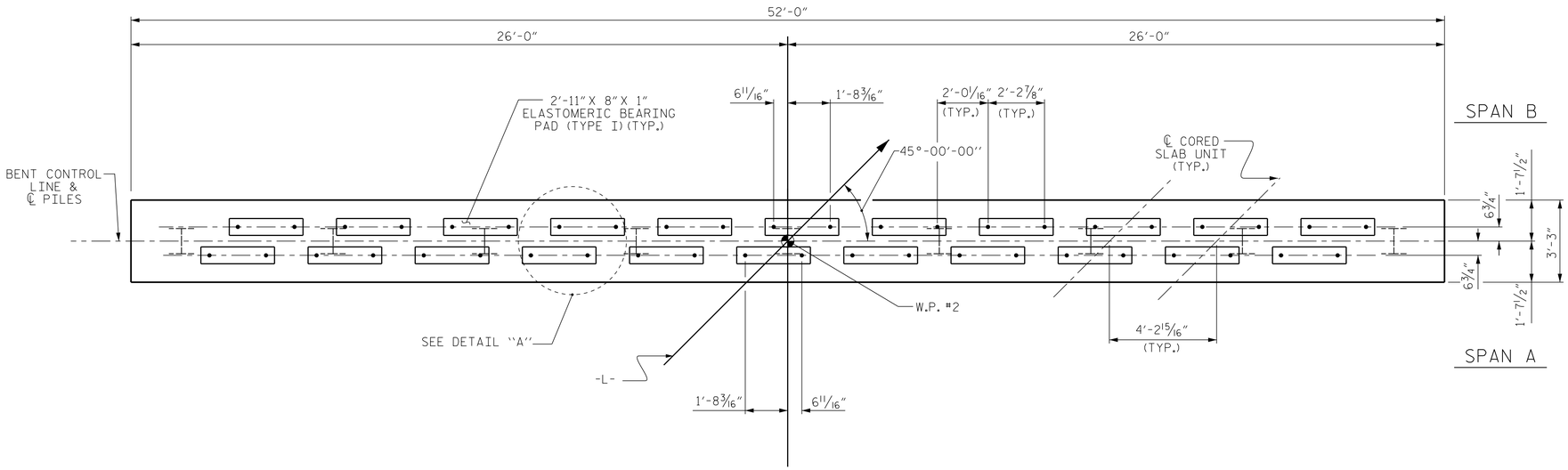

PLAN

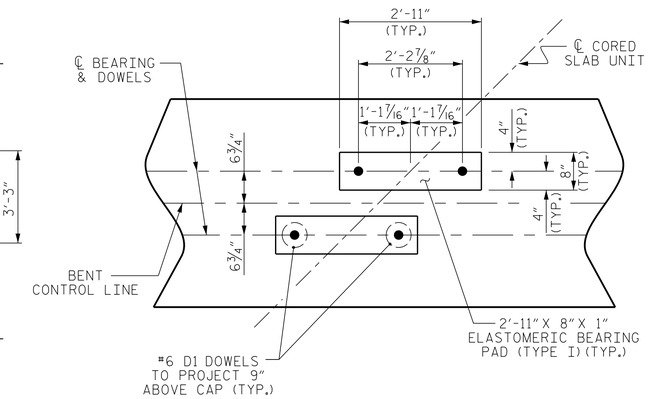

DETAIL "A"

(DIMENSIONS ARE TYPICAL EACH BEARING)

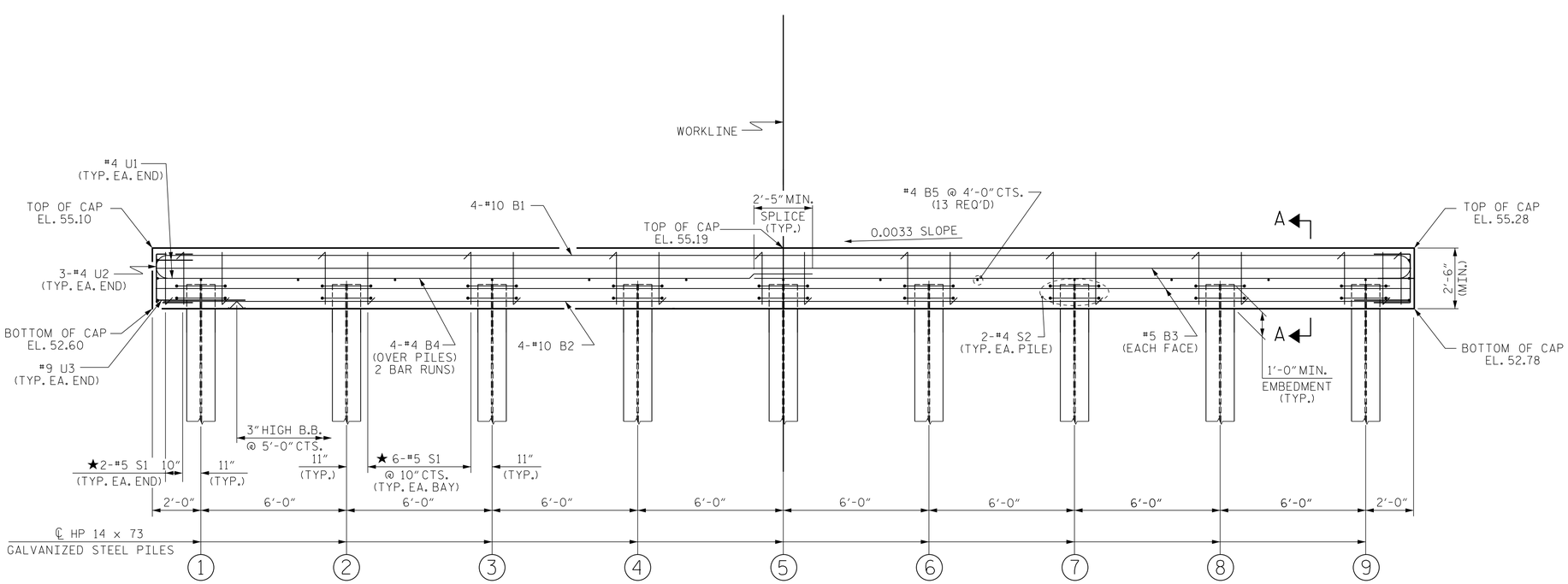

ELEVATION

FOR SECTION A-A, SEE SHEET 2 OF 2

TOP OF PILE ELEVATIONS	
1	53.61
2	53.63
3	53.65
4	53.67
5	53.69
6	53.71
7	53.73
8	53.75
9	53.77

PROJECT NO. 17BP.4.R.82

EDGECOMBE COUNTY

STATION: 16+56.00 -L-

SHEET 1 OF 2

ENGINEER OF RECORD

DocuSigned by: John Arthur Dilworth

4/9/2018

N.C. PROFESSIONAL SEAL 22072 ENGINEER JOHN ARTHUR DILWORTH

WETHERILL ENGINEERING

1223 Jones Franklin Rd.
Raleigh, N.C. 27606
Bus: 919 851 8077
Fax: 919 851 8107
LICENSE NO. F-0377

STATE OF NORTH CAROLINA
DEPARTMENT OF TRANSPORTATION
RALEIGH

SUBSTRUCTURE

BENT No. 1

REVISIONS								SHEET NO.
NO.	BY:	DATE:	NO.	BY:	DATE:			S-11
1			3					TOTAL SHEETS
2			4					S-19

DRAWN BY : J. PENDERGRAFT DATE : 10-17

CHECKED BY : J. DILWORTH DATE : 11-17

DOCUMENT NOT CONSIDERED FINAL UNLESS ALL SIGNATURES COMPLETED

P:\2017\17108.01_EDGECOMBE_47\Structures\DGN\EDGECOMBE 47 BT.dgn
3/28/2018 9:39:34 AM