DocuSign Envelope ID: D036B1D6-1A30-4722-AB1B-80F61418B508

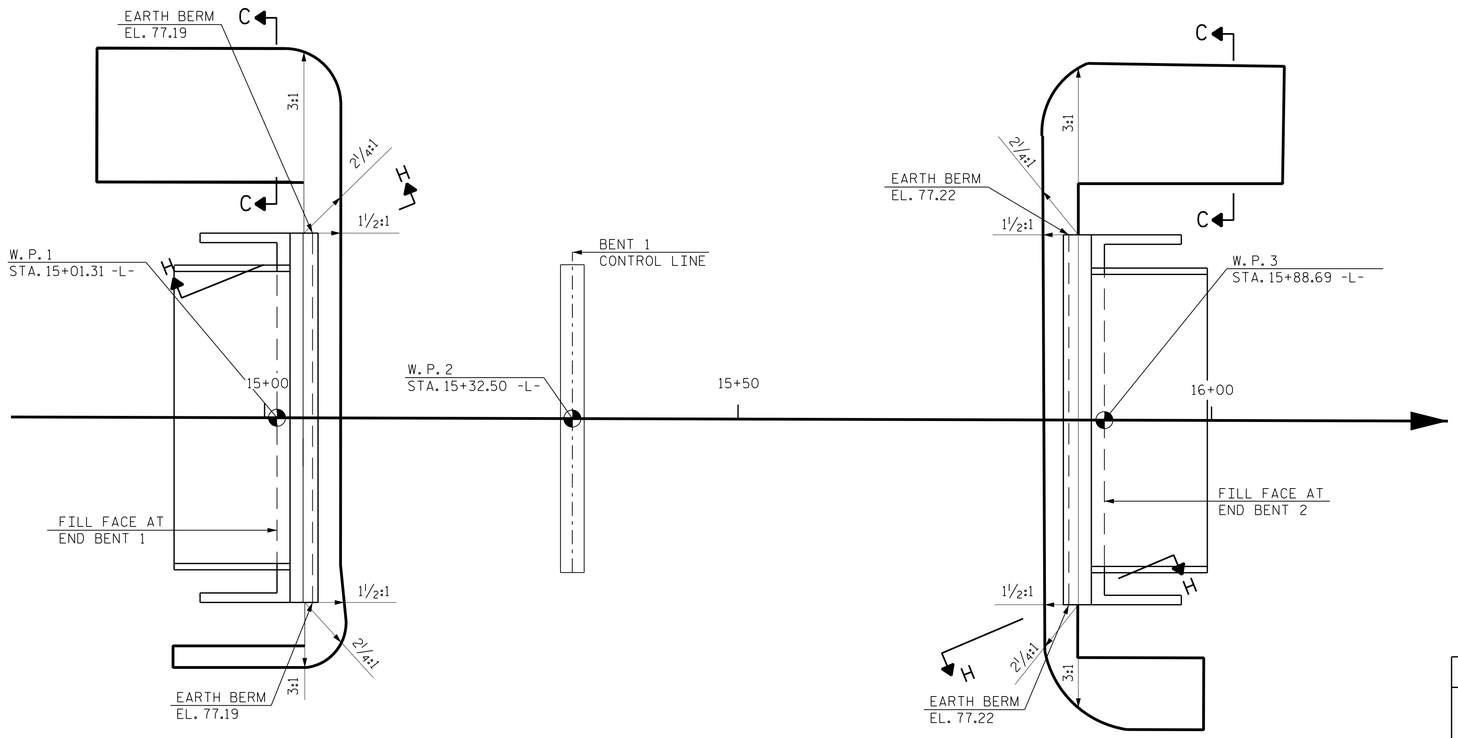

NOTES :

FOR BERM WIDTH DIMENSIONS, SEE GENERAL DRAWING.

ESTIMATED QUANTITIES

BRIDGE @ STA. 15+45.00 -L-	RIP RAP CLASS II (2'-0" THICK)	GEOTEXTILE FOR DRAINAGE
	TONS	SQUARE YARDS
END BENT 1	240	265
END BENT 2	245	275

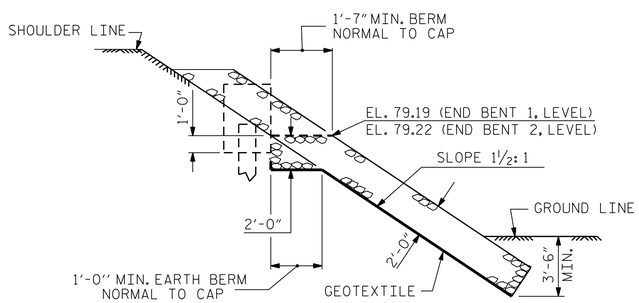

SECTION H-H

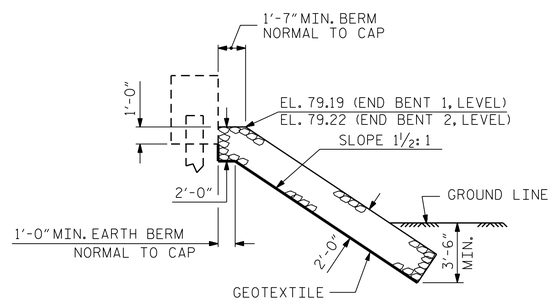

℄ SECTION
BERM RIP RAPPED

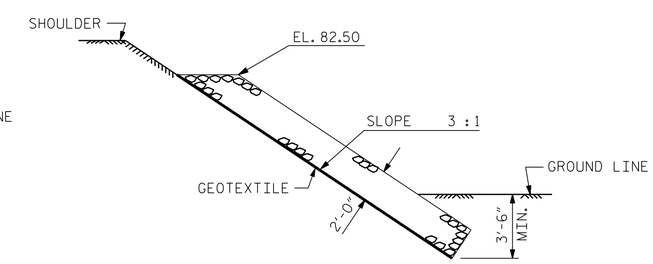

SECTION C-C

PROJECT NO. 17BP.4.R.87
WAYNE COUNTY
STATION: 15+45.00 -L-

SHEET 1 OF 1

STATE OF NORTH CAROLINA
DEPARTMENT OF TRANSPORTATION
RALEIGH

STANDARD

RIP RAP DETAILS

BRIDGE NO. 950015

NORTH CAROLINA PROFESSIONAL SEAL 14025 ENGINEER TIMOTHY L. COGGINS
Timothy L. Coggins
5/16/2018

RK&K
RUMMEL, KLEPPER & KAHL, LLP
900 RIDGEFIELD DRIVE SUITE 350
RALEIGH, NC 27609-3960 (919) 878-9560
NC LICENSE NUMBER: F-0112

DOCUMENT NOT CONSIDERED FINAL
UNLESS ALL SIGNATURES COMPLETED

REVISIONS							SHEET NO.
NO.	BY:	DATE:	NO.	BY:	DATE:		S-19
1			3				TOTAL SHEETS
2			4				21

DRAWN BY : O. J. PAITEL DATE : JAN 2019
CHECKED BY : T. L. COGGINS DATE : JAN 2019
DESIGN ENGINEER OF RECORD : T. L. COGGINS DATE : JAN 2019

opaitel
4/17/2018 M:\Projects\2015\15213_NCEastLSA\U01_Div4Bridges\Bridge950015\Design\Structures\DGN\FinalPlans\950015_SD_SP.dgn