DocuSign Envelope ID: D036B1D6-1A30-4722-AB1B-80F61418B508

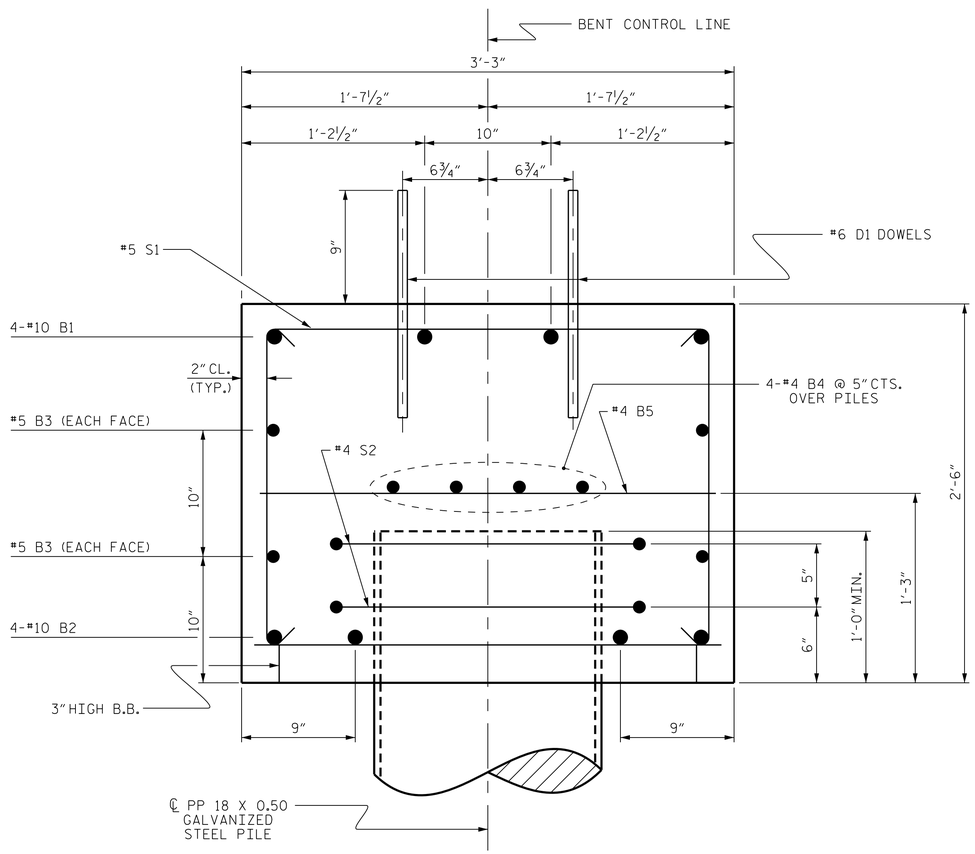

SECTION A-A

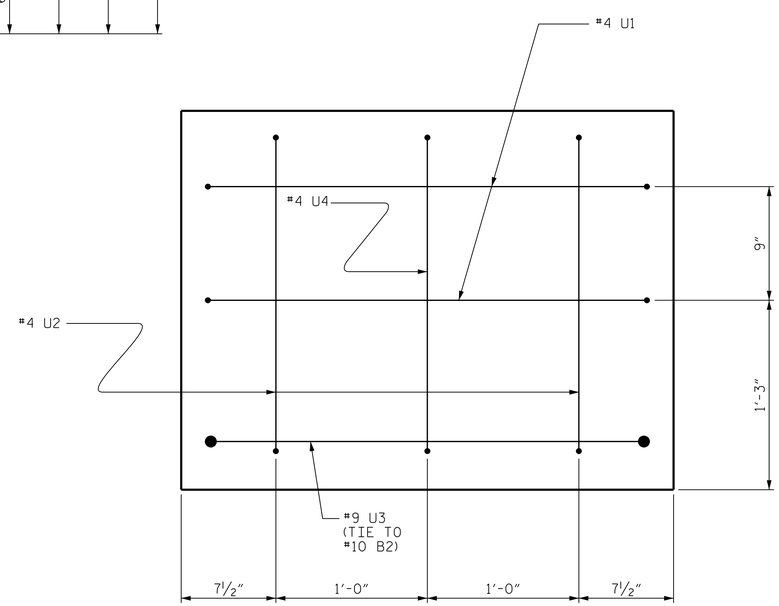

END OF CAP VIEW

(TYPICAL BOTH ENDS)

BAR TYPES

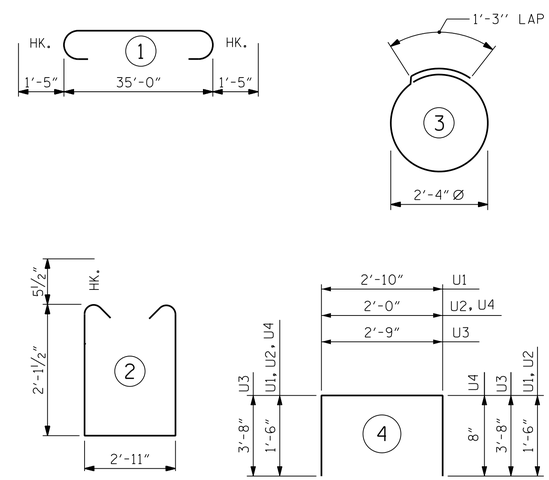

ALL BAR DIMENSIONS ARE OUT TO OUT.

BILL OF MATERIAL
FOR ONE BENT

BAR	NO.	SIZE	TYPE	LENGTH	WEIGHT
B1	4	#10	1	37'-10"	651
B2	4	#10	STR	35'-2"	605
B3	4	#5	STR	35'-2"	147
B4	8	#4	STR	18'-10"	101
B5	9	#4	STR	2'-11"	18
D1	44	#6	STR	1'-6"	99
S1	32	#5	2	8'-1"	270
S2	14	#4	3	8'-7"	80
U1	4	#4	4	5'-10"	16
U2	4	#4	4	5'-0"	13
U3	2	#9	4	10'-1"	69
U4	2	#4	4	4'-2"	6

REINFORCING STEEL (FOR ONE BENT) 2075 LBS

CLASS A CONCRETE BREAKDOWN (FOR ONE BENT)

TOTAL CLASS A CONCRETE ▲ 10.2 C.Y.

PP 18 × 0.50 GALVANIZED STEEL PILES (FOR ONE BENT)

No. 7 LIN. FT. 420

PILE DRIVING EQUIPMENT SETUP FOR PP 18 × 0.50 GALVANIZED STEEL PILES (FOR ONE BENT) NO. 7

▲ CONCRETE DISPLACED BY THE PP 18 × 0.50 GALVANIZED STEEL PILES HAS BEEN DEDUCTED FROM THE CONCRETE QUANTITY.

PROJECT NO. 17BP.4.R.87

WAYNE COUNTY

STATION: 15+45.00 -L-

SHEET 2 OF 3

STATE OF NORTH CAROLINA
DEPARTMENT OF TRANSPORTATION
RALEIGH

SUBSTRUCTURE

BENT No. 1

BRIDGE NO. 950015

NORTH CAROLINA PROFESSIONAL SEAL 24045 ENGINEER TIMOTHY L. COGGINS
Signed by: Timothy L. Coggins
5/16/2018

RK&K
RUMMEL, KLEPPER & KAHL, LLP
900 RIDGEFIELD DRIVE SUITE 350
RALEIGH, NC 27609-3960 (919) 878-9560
NC LICENSE NUMBER: F-0112

DOCUMENT NOT CONSIDERED FINAL UNLESS ALL SIGNATURES COMPLETED

REVISIONS							
NO.	BY:	DATE:	NO.	BY:	DATE:		
1			3				
2			4				

SHEET NO. S-17

TOTAL SHEETS 21

DRAWN BY : O. J. PAITEL DATE : JAN 2019
CHECKED BY : T. L. COGGINS DATE : JAN 2019
DESIGN ENGINEER OF RECORD : T. L. COGGINS DATE : JAN 2019

opaitel
4/17/2018 M:\Projects\2015\15213_NCEastLSA\J01_Div4Bridges\Bridge950015\Design\Structures\DGN\FinalPlans\950015_SD_B1D.dgn