DocuSign Envelope ID: D036B1D6-1A30-4722-AB1B-80F61418B508

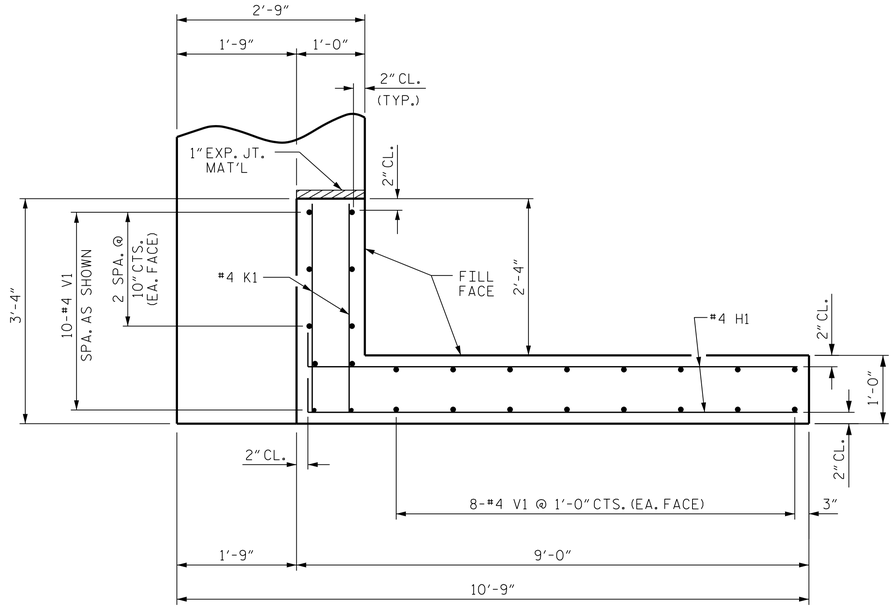

PLAN OF WING (W1)

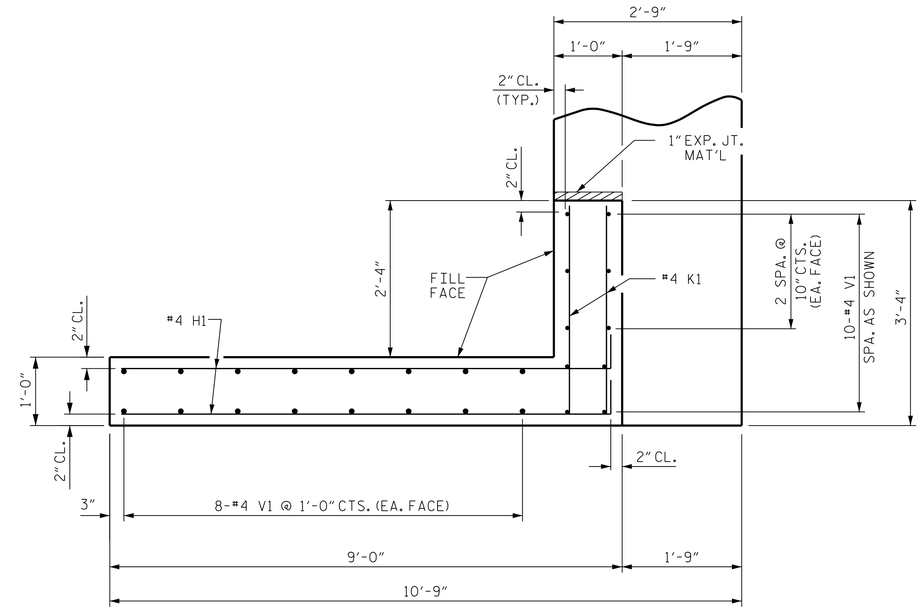

PLAN OF WING (W2)

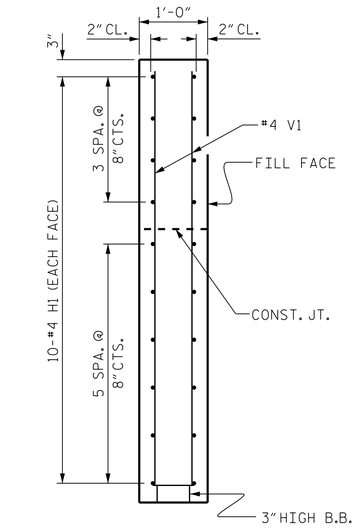

SECTION X-X

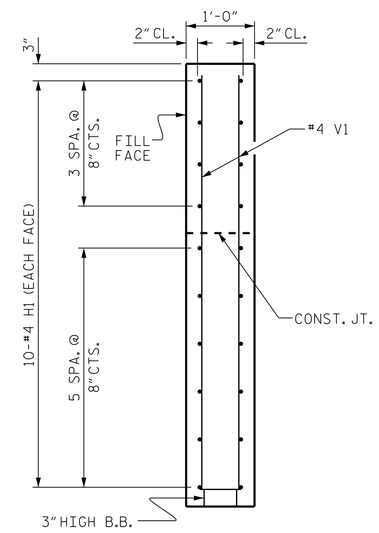

SECTION Y-Y

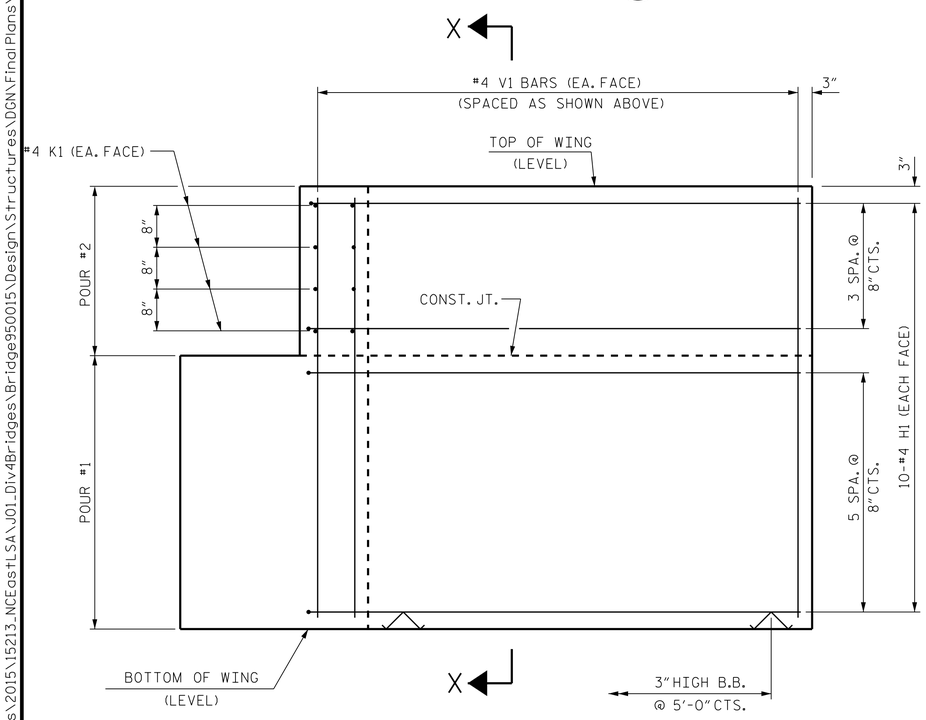

ELEVATION OF WING (W1)

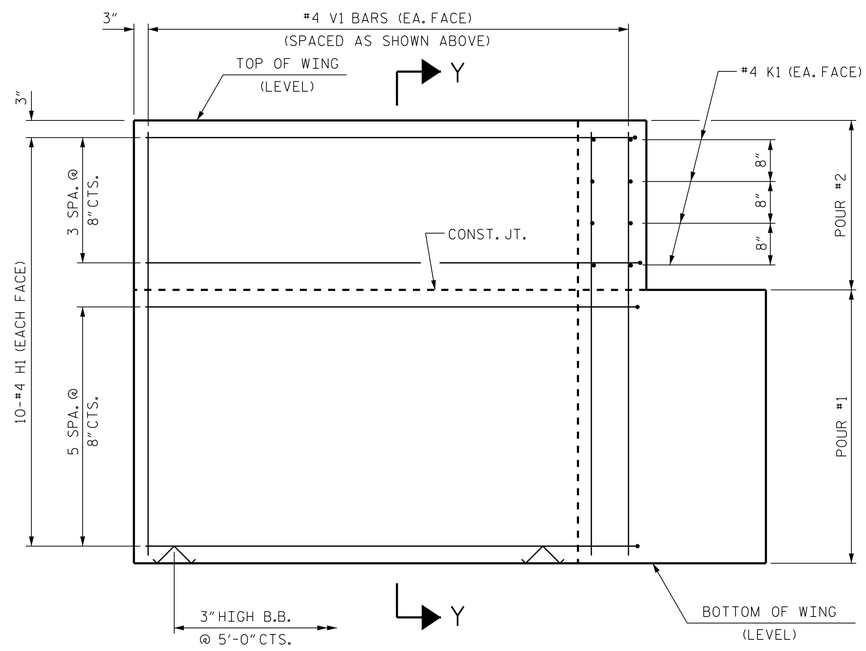

ELEVATION OF WING (W2)

WING DETAILS

PROJECT NO. 17BP.4.R.87

WAYNE COUNTY

STATION: 15+45.00 -L-

SHEET 3 OF 4

STATE OF NORTH CAROLINA
DEPARTMENT OF TRANSPORTATION
RALEIGH

SUBSTRUCTURE

END BENT
WING DETAILS

BRIDGE NO. 950015

NORTH CAROLINA PROFESSIONAL SEAL 19045 ENGINEER TIMOTHY L. COGGINS
Signed by: Timothy L. Coggins
5/16/2018

RK&K
RUMMEL, KLEPPER & KAHL, LLP
900 RIDGEFIELD DRIVE SUITE 350
RALEIGH, NC 27609-3960 (919) 878-9560
NC LICENSE NUMBER: F-0112

DOCUMENT NOT CONSIDERED FINAL UNLESS ALL SIGNATURES COMPLETED

REVISIONS						
NO.	BY:	DATE:	NO.	BY:	DATE:	
1			3			
2			4			

SHEET NO. S-14
TOTAL SHEETS 21

DRAWN BY : O. J. PAITEL DATE : JAN 2019
CHECKED BY : T. L. COGGINS DATE : JAN 2019
DESIGN ENGINEER OF RECORD : T. L. COGGINS DATE : JAN 2019

M:\Projects\2015\15213_NCEastLSA\J01_Div4Bridges\Bridge950015\Design\Structures\DGN\FinalPlans\950015_SD_EBW.dgn
opaitel
4/17/2018