DocuSign Envelope ID: D036B1D6-1A30-4722-AB1B-80F61418B508

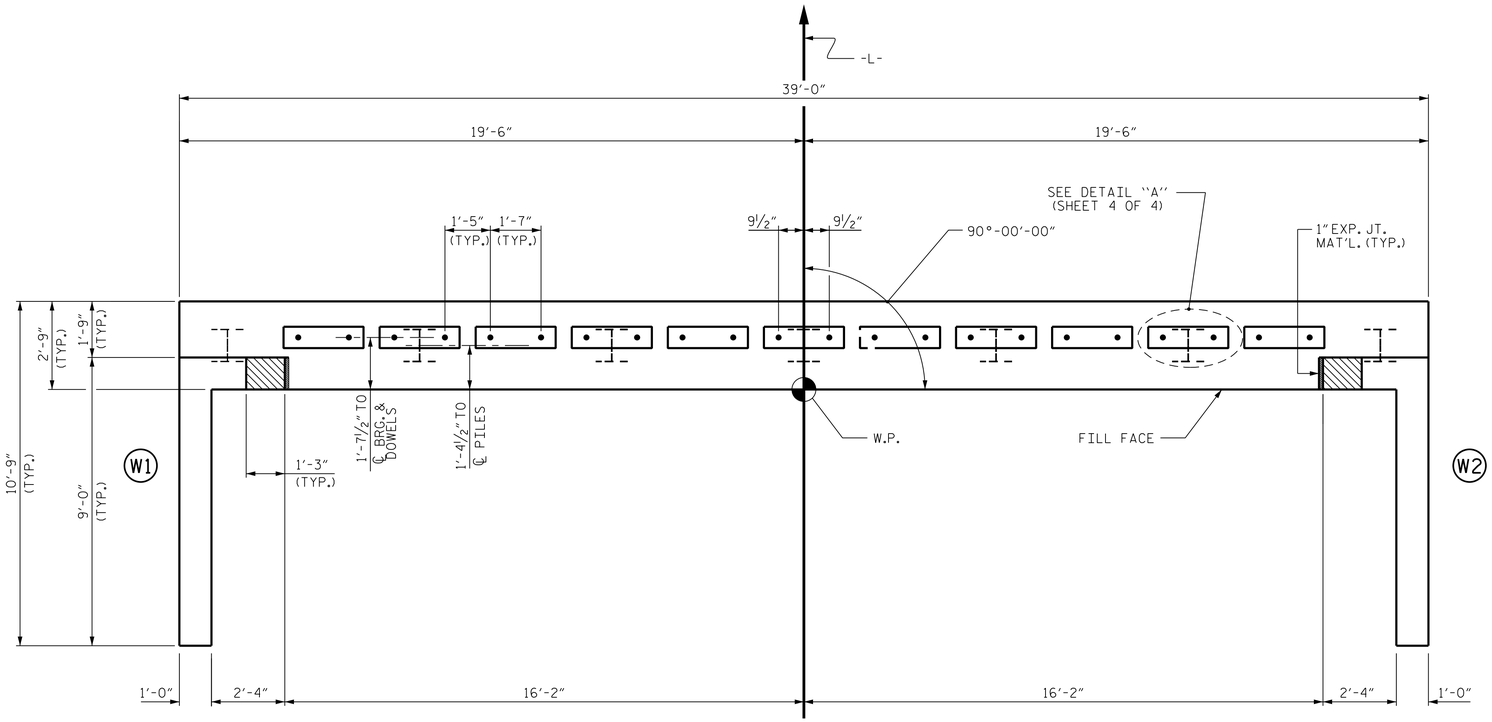

PLAN

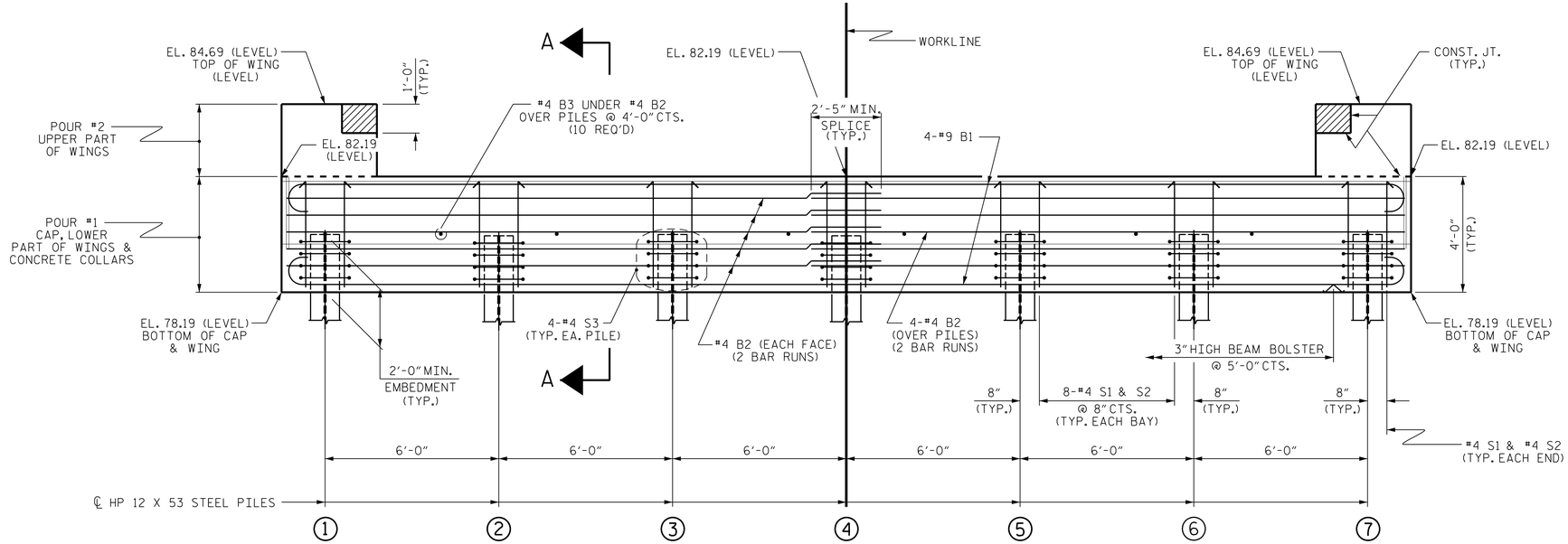

ELEVATION

WINGS NOT SHOWN FOR CLARITY.
FOR SECTION A-A, SEE SHEET 4 OF 4.
CONCRETE COLLARS FOR STEEL PILES NOT SHOWN IN PLAN AND ELEVATION VIEWS FOR CLARITY.
SEE "CORROSION PROTECTION FOR STEEL PILES DETAIL", SHEET 4 OF 4.

NOTES

STIRRUPS IN CAP MAY BE SHIFTED AS NECESSARY TO CLEAR DOWELS.

THE CONCRETE IN THE SHADED AREA OF THE WING SHALL BE POURED AFTER THE VERTICAL CONCRETE BARRIER RAIL IS CAST IF SLIP FORMING IS USED.

FOR PILE SPLICE DETAILS, SEE SHEET 4 OF 4.

FOR WING DETAILS, SEE SHEET 3 OF 4.

PROJECT NO. 17BP.4.R.87
WAYNE COUNTY
STATION: 15+45.00 -L-

SHEET 1 OF 4

STATE OF NORTH CAROLINA
DEPARTMENT OF TRANSPORTATION
RALEIGH

BRIDGE NO. 950015

SUBSTRUCTURE

END BENT No. 1

RK&K
RUMMEL, KLEPPER & KAHL, LLP
900 RIDGEFIELD DRIVE SUITE 350
RALEIGH, NC 27609-3960 (919) 878-9560
NC LICENSE NUMBER: F-0112

NORTH CAROLINA PROFESSIONAL SEAL 040 ENGINEER TIMOTHY L. COGGINS
Digitally signed by Timothy L. Coggins
5/16/2018

DOCUMENT NOT CONSIDERED FINAL UNLESS ALL SIGNATURES COMPLETED

REVISIONS						
NO.	BY:	DATE:	NO.	BY:	DATE:	
1			3			
2			4			

SHEET NO. S-12
TOTAL SHEETS 21

DRAWN BY : O. J. PAITEL DATE : JAN 2019
CHECKED BY : T. L. COGGINS DATE : JAN 2019
DESIGN ENGINEER OF RECORD : T. L. COGGINS DATE : JAN 2019

opaitel 4/17/2018 M:\Projects\2015\15213_NCEastLSA\J01_Div4Bridges\Bridge950015\Design\Structures\DGN\Final Plans\950015_SD_EB1.dgn