DocuSign Envelope ID: DFFE9F4A-DC0F-4D95-850A-238D1B16A873

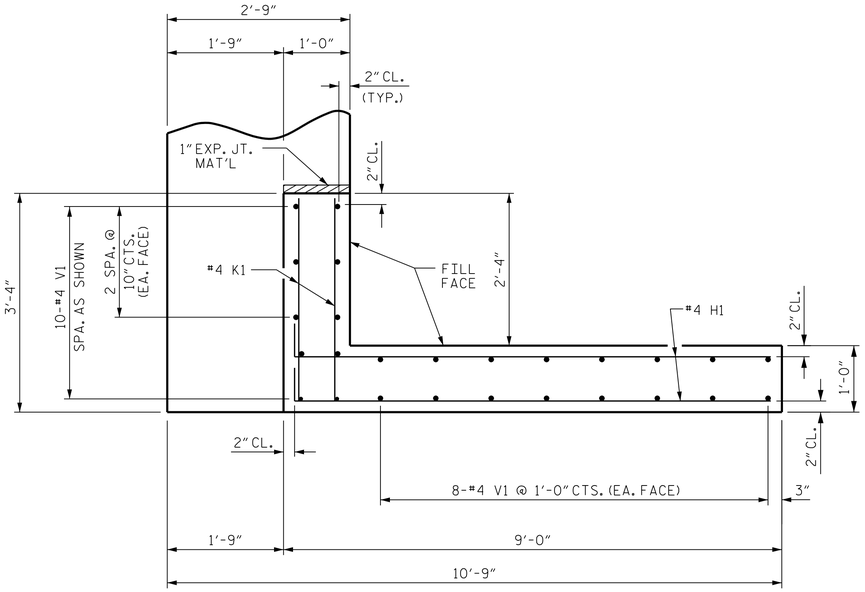

PLAN OF WING (W1)

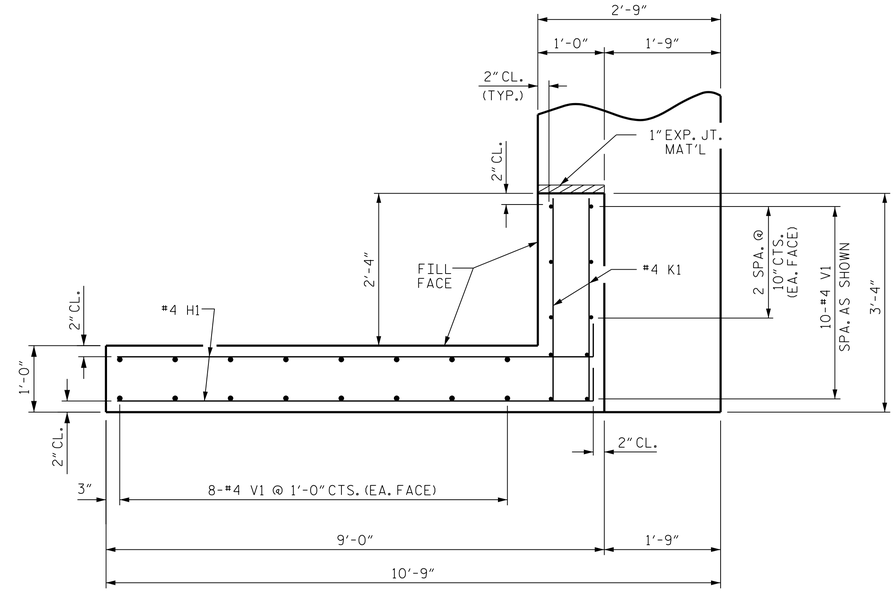

PLAN OF WING (W2)

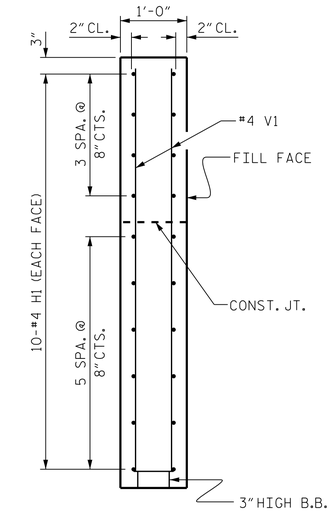

SECTION X-X

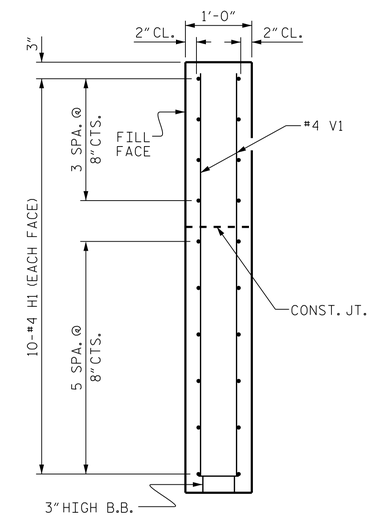

SECTION Y-Y

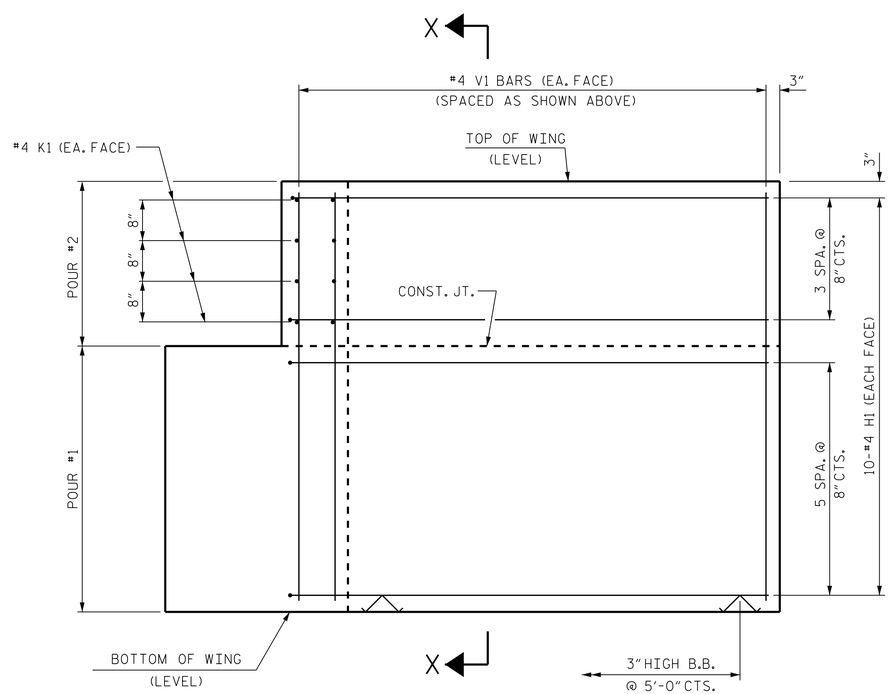

ELEVATION OF WING (W1)

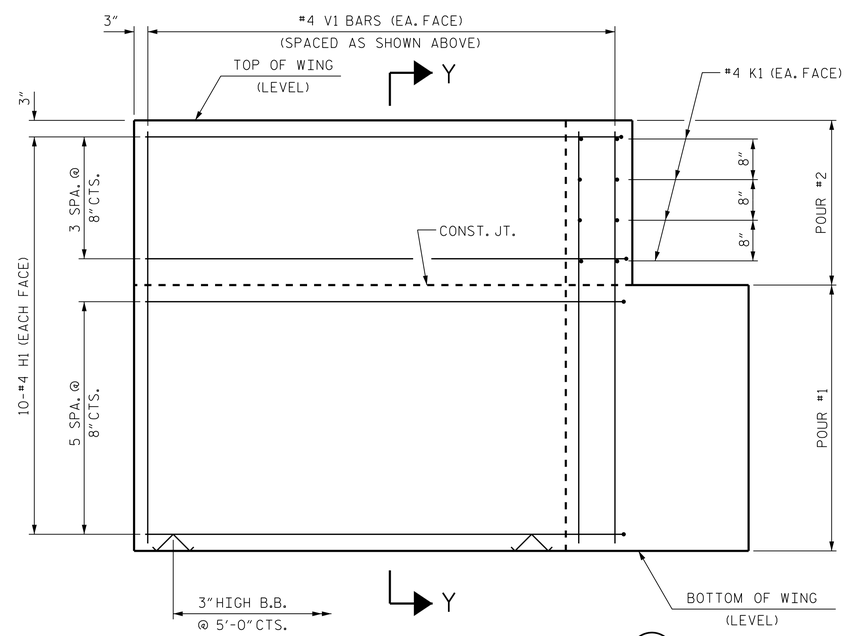

ELEVATION OF WING (W2)

WING DETAILS

PROJECT NO. 17BP.4.R.105

WAYNE COUNTY

STATION: 12+32.50 -L-

SHEET 3 OF 4

STATE OF NORTH CAROLINA
DEPARTMENT OF TRANSPORTATION
RALEIGH

BRIDGE NO. 950053

SUBSTRUCTURE

END BENT
WING DETAILS

RK&K
RUMMEL, KLEPPER & KAHL, LLP
900 RIDGEFIELD DRIVE SUITE 350
RALEIGH, NC 27609-3960 (919) 878-9560
NC LICENSE NUMBER: F-0112

NORTH CAROLINA PROFESSIONAL SEAL 24045 ENGINEER TIMOTHY L. COGGINS
5/16/2018

DOCUMENT NOT CONSIDERED FINAL UNLESS ALL SIGNATURES COMPLETED

REVISIONS							SHEET NO.
NO.	BY:	DATE:	NO.	BY:	DATE:		S-11
1			3				TOTAL SHEETS
2			4				15

DRAWN BY :	L.A. TUTT	DATE :	DEC. 2017
CHECKED BY :	B.D. KLAPPENBACH	DATE :	DEC. 2017
DESIGN ENGINEER OF RECORD :	T.L. COGGINS	DATE :	DEC. 2017

R:\Structures\DGN\endbents_cssp_4ft.dgn
atutt
1/9/2018