DocuSign Envelope ID: DFFE9F4A-DC0F-4D95-850A-238D1B16A873

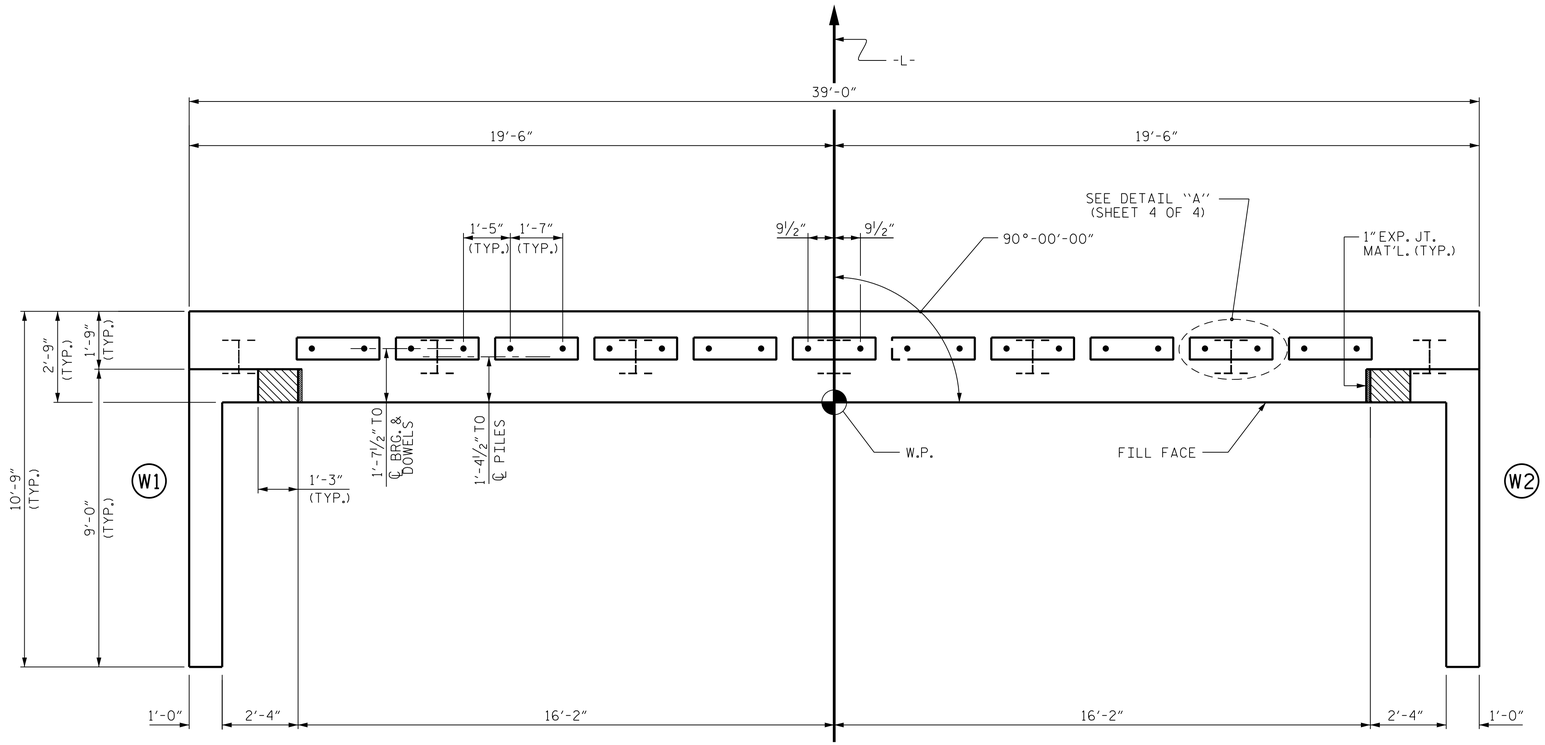

PLAN

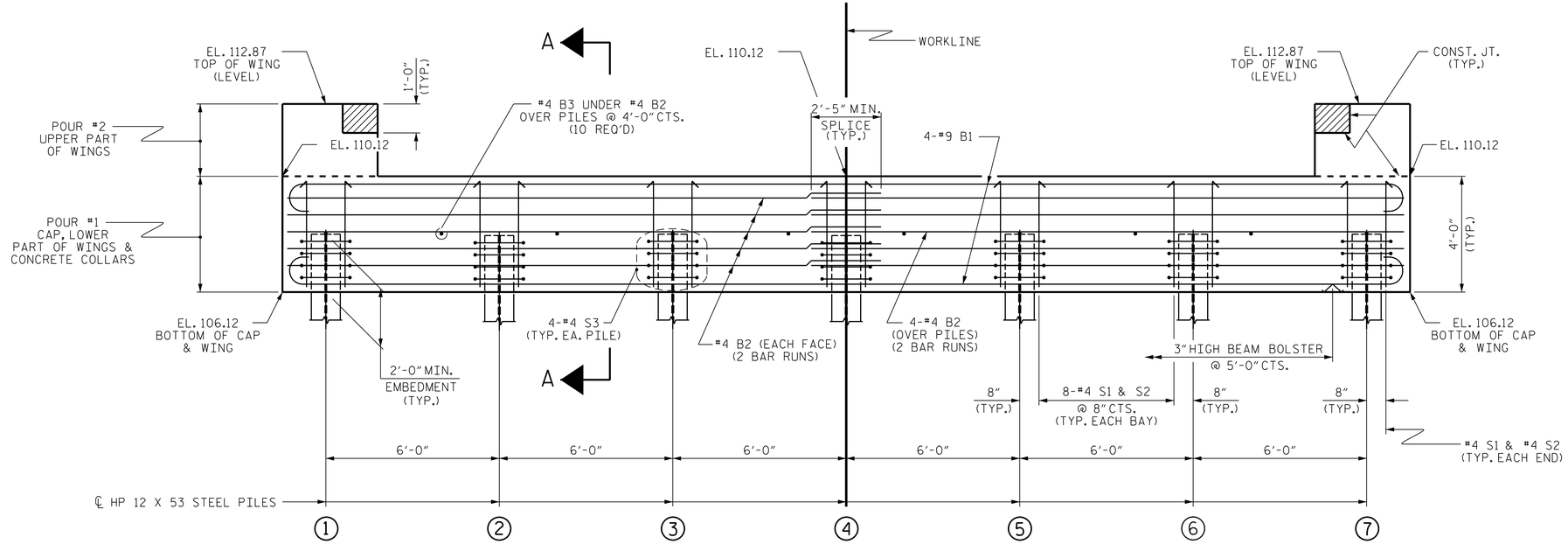

ELEVATION

WINGS NOT SHOWN FOR CLARITY.
FOR SECTION A-A, SEE SHEET 4 OF 4.
CONCRETE COLLARS FOR STEEL PILES NOT SHOWN IN PLAN AND ELEVATION VIEWS FOR CLARITY.
SEE "CORROSION PROTECTION FOR STEEL PILES DETAIL", SHEET 4 OF 4.

NOTES

STIRRUPS IN CAP MAY BE SHIFTED AS NECESSARY TO CLEAR DOWELS.

THE CONCRETE IN THE SHADED AREA OF THE WING SHALL BE POURED AFTER THE VERTICAL CONCRETE BARRIER RAIL IS CAST IF SLIP FORMING IS USED.

FOR PILE SPLICE DETAILS, SEE SHEET 4 OF 4.

FOR WING DETAILS, SEE SHEET 3 OF 4.

PROJECT NO. 17BP.4.R.105
WAYNE COUNTY
STATION: 12+32.50 -L-

SHEET 1 OF 4

STATE OF NORTH CAROLINA
DEPARTMENT OF TRANSPORTATION
RALEIGH

BRIDGE NO. 950053

SUBSTRUCTURE

END BENT No. 1

RK&K
RUMMEL, KLEPPER & KAHL, LLP
900 RIDGEFIELD DRIVE SUITE 350
RALEIGH, NC 27609-3960 (919) 878-9560
NC LICENSE NUMBER: F-0112

NORTH CAROLINA PROFESSIONAL SEAL 4045 ENGINEER TIMOTHY L. COGGINS
5/16/2018

DOCUMENT NOT CONSIDERED FINAL UNLESS ALL SIGNATURES COMPLETED

REVISIONS						SHEET NO.
NO.	BY:	DATE:	NO.	BY:	DATE:	S-9
1			3			TOTAL SHEETS
2			4			15

DRAWN BY :	L.A. TUTT	DATE :	DEC. 2017
CHECKED BY :	B.D. KLAPPENBACH	DATE :	DEC. 2017
DESIGN ENGINEER OF RECORD :	T.L. COGGINS	DATE :	DEC. 2017

R:\Structures\DGN\endbents_cssp_4ft.dgn
atutt
1/9/2018