DocuSign Envelope ID: DFFE9F4A-DC0F-4D95-850A-238D1B16A873

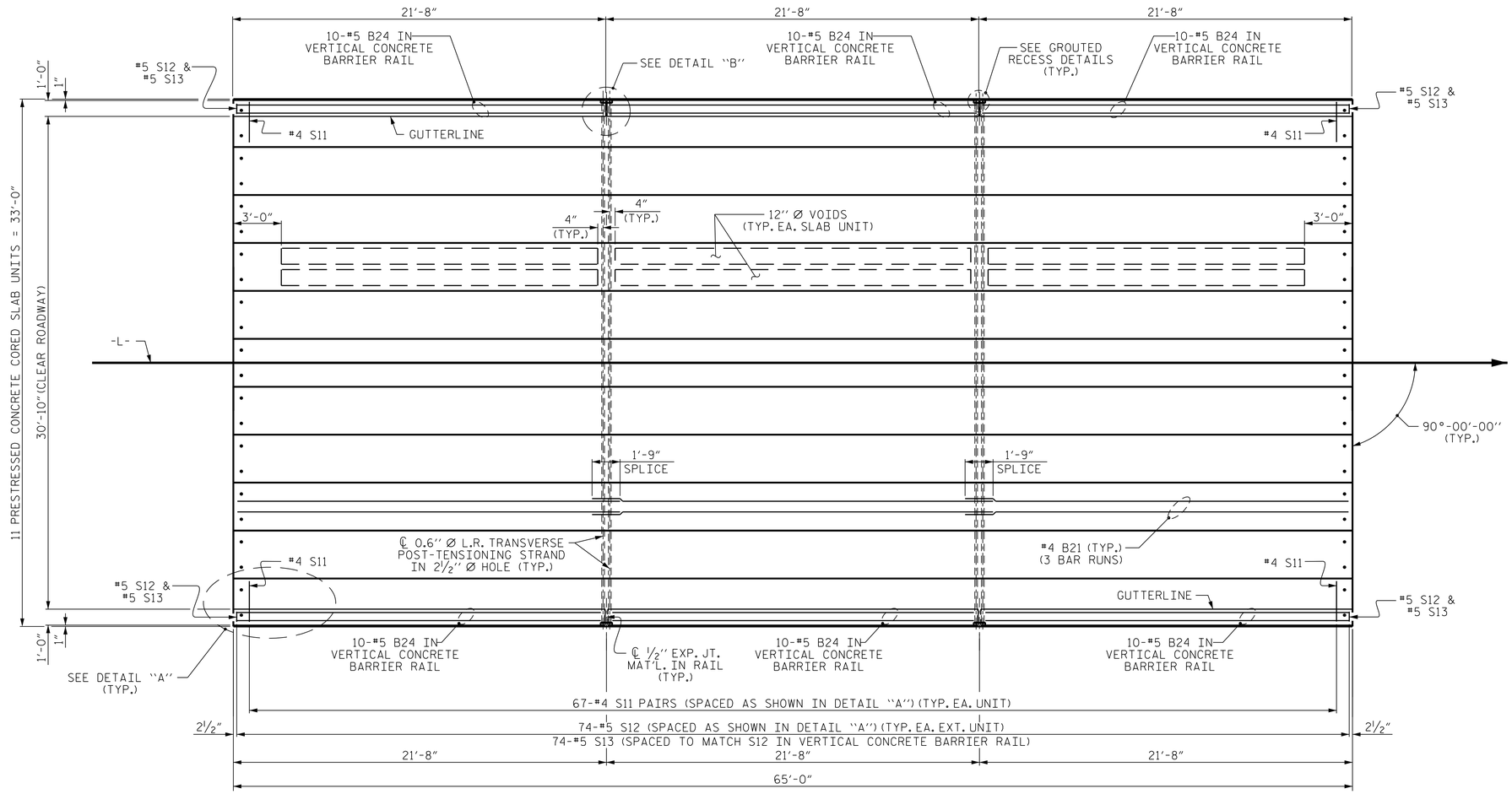

PLAN OF UNIT

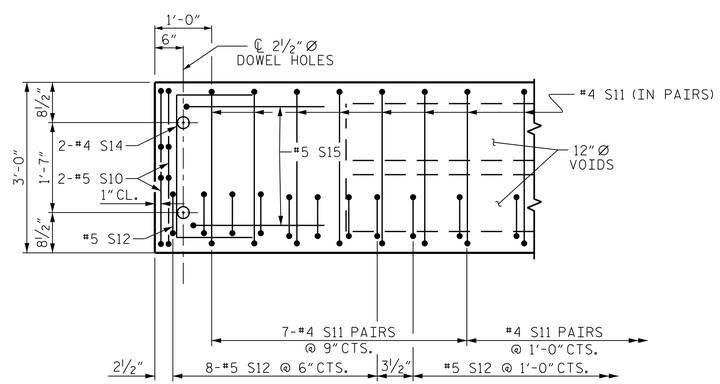

DETAIL "A"

(TYPICAL EACH END OF UNIT)
NOTE: EXTERIOR UNIT SHOWN - INTERIOR UNIT SIMILAR EXCEPT OMIT #5 S12 BARS.

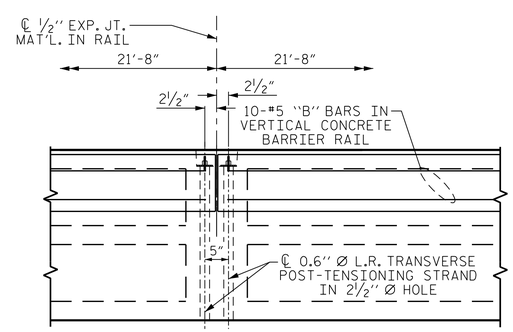

DETAIL "B"

#4 S11 BARS MAY BE SHIFTED AS NECESSARY TO MAINTAIN 1" CLEAR TO GROUTED RECESS AND 2½" Ø TRANSVERSE POST-TENSIONING STRAND HOLES

PROJECT NO. 17BP.4.R.105
WAYNE COUNTY
STATION: 12+32.50 -L-

STATE OF NORTH CAROLINA
DEPARTMENT OF TRANSPORTATION
RALEIGH

PLAN OF 65' UNIT 30'-10" CLEAR ROADWAY 90° SKEW

BRIDGE NO. 950053

NORTH CAROLINA PROFESSIONAL SEAL 045 ENGINEER TIMOTHY L. COGGINS
Docu Sign Envelope
5/16/2018

RK&K
RUMMEL, KLEPPER & KAHL, LLP
900 RIDGEFIELD DRIVE SUITE 350
RALEIGH, NC 27609-3960 (919) 878-9560
NC LICENSE NUMBER: F-0112

DOCUMENT NOT CONSIDERED FINAL UNLESS ALL SIGNATURES COMPLETED

REVISIONS						SHEET NO.
NO.	BY:	DATE:	NO.	BY:	DATE:	S-6
1			3			TOTAL SHEETS
2			4			15

DRAWN BY : L.A. TUTT DATE : DEC. 2017
CHECKED BY : B.D. KLAPPENBACH DATE : DEC. 2017
DESIGN ENGINEER OF RECORD : T.L. COGGINS DATE : DEC. 2017

atutt 1/9/2018 R:\Structures\DGN\24pcs_cssp.dgn