DocuSign Envelope ID: DFFE9F4A-DC0F-4D95-850A-238D1B16A873

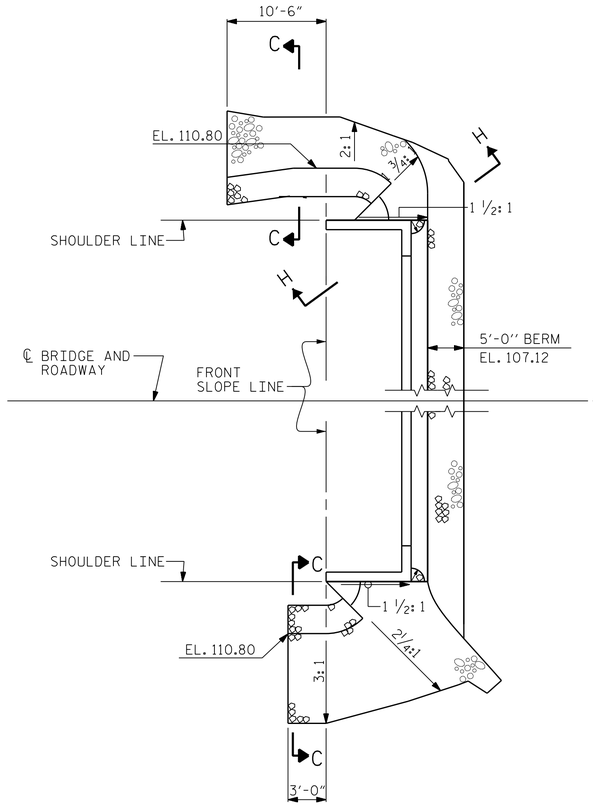

END BENT 1

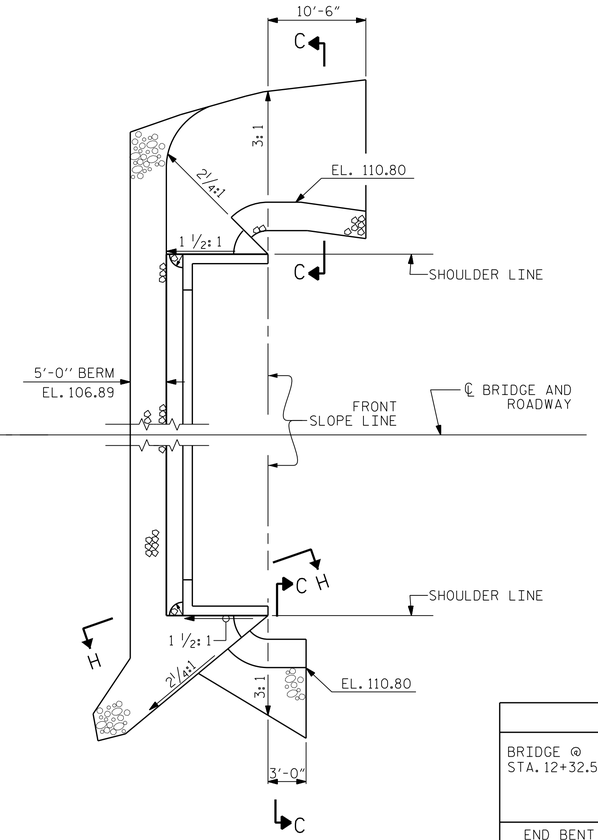

END BENT 2

PLAN

ESTIMATED QUANTITIES		
BRIDGE @ STA. 12+32.50 -L-	RIP RAP CLASS II	GEOTEXTILE FOR DRAINAGE
	TONS	SQUARE YARDS
END BENT 1	80	95
END BENT 2	90	105
TOTAL	170	200

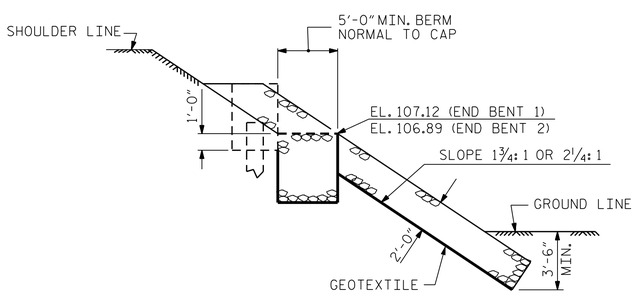

SECTION H-H

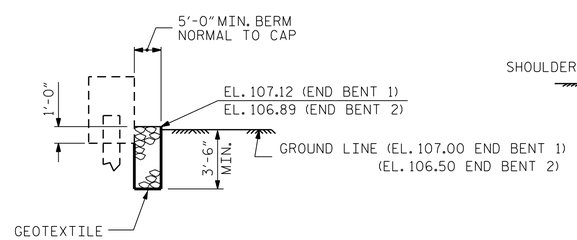

℄ SECTION
BERM RIP RAPPED

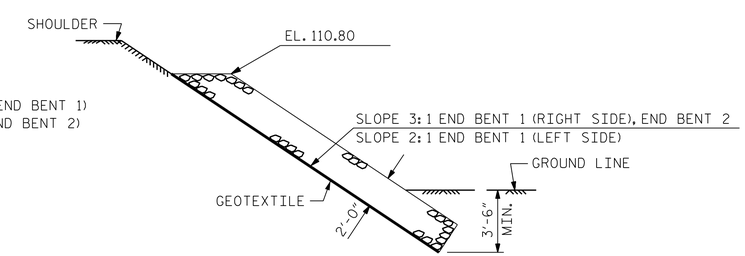

SECTION C-C

PROJECT NO. 17BP.4.R.105
WAYNE COUNTY
STATION: 12+32.50 -L-

STATE OF NORTH CAROLINA
DEPARTMENT OF TRANSPORTATION
RALEIGH

STANDARD

RIP RAP DETAILS

BRIDGE NO. 950053

NORTH CAROLINA PROFESSIONAL SEAL 14045 ENGINEER TIMOTHY L. COGGINS
5/16/2018

RK&K
RUMMEL, KLEPPER & KAHL, LLP
900 RIDGEFIELD DRIVE SUITE 350
RALEIGH, NC 27609-3960 (919) 878-9560
NC LICENSE NUMBER: F-0112

DOCUMENT NOT CONSIDERED FINAL UNLESS ALL SIGNATURES COMPLETED

REVISIONS						SHEET NO.
NO.	BY:	DATE:	NO.	BY:	DATE:	S-13
1			3			TOTAL SHEETS
2			4			15

DRAWN BY :	L.A. TUTT	DATE :	DEC. 2017
CHECKED BY :	B.D. KLAPPENBACH	DATE :	DEC. 2017
DESIGN ENGINEER OF RECORD :	T.L. COGGINS	DATE :	DEC. 2017

opattel
1/23/2018 R:\Structures\DGN\rr1.18.dgn