DocuSign Envelope ID: 755DE461-645C-453E-9C44-CF73D0A7B625

6/2/99

PROJECT REFERENCE NO.	SHEET NO.
R-5817	2A-1

ROADWAY DESIGN ENGINEER
2/27/2018
NORTH CAROLINA PROFESSIONAL SEAL 034371 ENGINEER BRANDON W. JOHNSON
DocuSigned by: Brandon W. Johnson
6A2B4A3A0A0A4A0...

PAVEMENT DESIGN ENGINEER
2/28/2018
NORTH CAROLINA PROFESSIONAL SEAL 037392 ENGINEER RACHEL C. EVANS
DocuSigned by: Rachel C. Evans
C8A0A0A0A0A0A0...

DOCUMENT NOT CONSIDERED FINAL UNLESS ALL SIGNATURES COMPLETED

Prepared in the Office of: SUMMIT DESIGN AND ENGINEERING SERVICES
NC FIRM LICENSE No: P-0339
504 Meadowlands Drive
Hillsborough, NC 27278
(919) 732-3883
(919) 732-6676 (FAX)

PAVEMENT SCHEDULE

(FINAL PAVEMENT DESIGN)

C1	PROP. APPROX. 3″ ASPHALT CONCRETE SURFACE COURSE, TYPE S9.5B, AT AN AVERAGE RATE OF 168 LBS. PER SQ. YD. IN EACH OF TWO LAYERS.
C2	PROP. VAR. DEPTH ASPHALT CONCRETE SURFACE COURSE, TYPE S9.5B, AT AN AVERAGE RATE OF 112 LBS. PER SQ. YD. PER 1″ DEPTH. TO BE PLACED IN LAYERS NOT TO EXCEED 2″ IN DEPTH.
D1	PROP. APPROX. 2½″ ASPHALT CONCRETE INTERMEDIATE COURSE, TYPE I19.0C, AT AN AVERAGE RATE OF 285 LBS. PER SQ. YD.
D2	PROP. VAR. DEPTH ASPHALT CONCRETE INTERMEDIATE COURSE, TYPE I19.0C, AT AN AVERAGE RATE OF 114 LBS. PER SQ. YD. PER 1″ DEPTH, TO BE PLACED IN LAYERS NOT LESS THAN 2½″ IN DEPTH OR GREATER THAN 4″ IN DEPTH.
E1	PROP. APPROX. 4″ ASPHALT CONCRETE BASE COURSE, TYPE B25.0C, AT AN AVERAGE RATE OF 456 LBS. PER SQ. YD.
E2	PROP. VAR. DEPTH ASPHALT CONCRETE BASE COURSE, TYPE B25.0C, AT AN AVERAGE RATE OF 114 LBS. PER SQ. YD. PER 1″ DEPTH. TO BE PLACED IN LAYERS NOT LESS THAN 3″ IN DEPTH OR GREATER THAN 5½″ IN DEPTH.
T	EARTH MATERIAL.
U	EXISTING PAVEMENT.
V	MILLING BITUMINOUS PAVEMENT. 3″ DEPTH.
W	VARIABLE DEPTH ASPHALT PAVEMENT (SEE WEDGING DETAIL)

NOTE: PAVEMENT EDGE SLOPES ARE 1:1 UNLESS SHOWN OTHERWISE.

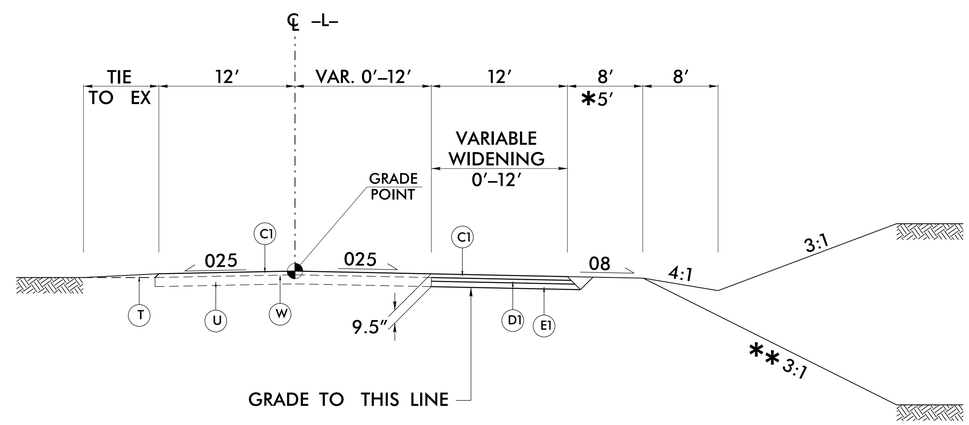

** SLOPES MAY BE STEEPER THAN 3:1 TO AVOID SLIVER FILL, NO SLOPE SHALL BE STEEPER THAN 2:1

TYPICAL SECTION NO. 1

USE TYPICAL SECTION NO. 1

* –L– STA 10+25.00 TO 11+50.00
–L– STA 11+50.00 TO 25+00.00

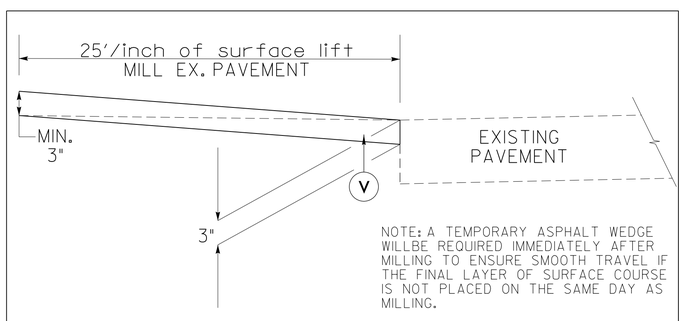

INCIDENTAL MILLING PAVEMENT KEY–IN DETAIL (TIE–IN)

–L– STA 10+25.00 TO 11+00.00
–L– STA 24+25.00 TO 25+00.00
–Y1– STA 12+25.00 TO 13+00.00

STATION RANGES ARE APPROXIMATE ONLY. GRADE MAY BE ADJUSTED BY ENGINEER TO ENSURE A PROPER TIE–IN.

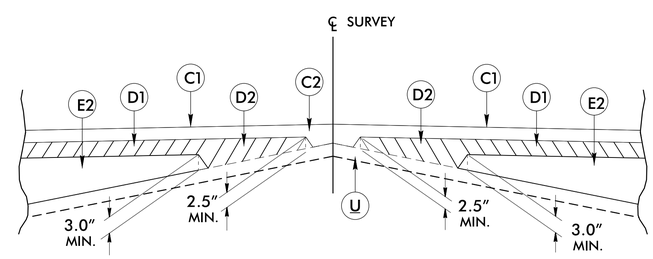

Detail Showing Method of Wedging

27-FEB-2018 09:43
R-5817_Rdy_typ.dgn
faith.patrick