DocuSign Envelope ID: 6598CDCB-6462-437F-96B1-F480334A07D2

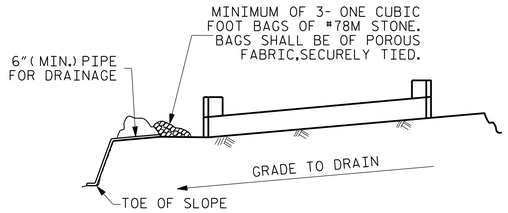

BAGGED STONE AND PIPE SHALL BE PLACED IMMEDIATELY AFTER COMPLETION OF END BENT EXCAVATION. PIPE MAY BE EITHER CONCRETE, CORRUGATED STEEL, CORRUGATED ALUMINUM ALLOY, OR CORRUGATED PLASTIC. PERFORATED PIPE WILL NOT BE ALLOWED.

BAGGED STONE SHALL REMAIN IN PLACE UNTIL THE ENGINEER DIRECTS THAT IT BE REMOVED. THE CONTRACTOR SHALL REMOVE AND DISPOSE OF SILT ACCUMULATIONS AT BAGGED STONE WHEN SO DIRECTED BY THE ENGINEER. BAGS SHALL BE REMOVED AND REPLACED WHENEVER THE ENGINEER DETERMINES THAT THEY HAVE DETERIORATED AND LOST THEIR EFFECTIVENESS.

NO SEPARATE PAYMENT WILL BE MADE FOR THIS WORK AND THE ENTIRE COST OF THIS WORK SHALL BE INCLUDED IN THE UNIT CONTRACT PRICE BID FOR THE SEVERAL PAY ITEMS.

TEMPORARY DRAINAGE AT END BENT

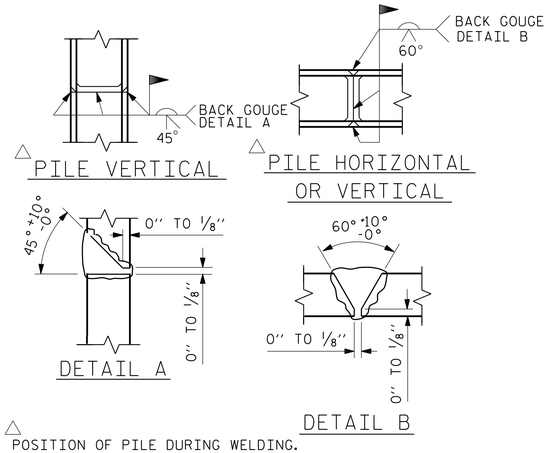

△ POSITION OF PILE DURING WELDING.

PILE SPLICE DETAILS

BAR TYPES

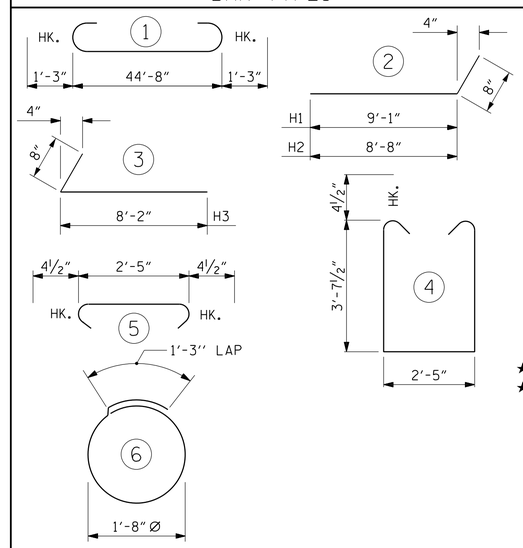

ALL BAR DIMENSIONS ARE OUT TO OUT.

END BENT No. 1	END BENT No. 2
HP 12 X 53 STEEL PILES	HP 12 X 53 STEEL PILES
NO: 7 LIN. FT.= 104	NO: 7 LIN. FT.= 104
STEEL PILE POINTS 7 EA.	STEEL PILE POINTS 7 EA.

BILL OF MATERIAL
FOR ONE END BENT

BAR	NO.	SIZE	TYPE	LENGTH	WEIGHT
B1	8	#9	1	47'-2"	1283
B2	28	#4	STR	23'-8"	443
B3	12	#4	STR	2'-5"	19
D1	22	#6	STR	1'-6"	50
H1	10	#4	2	9'-9"	65
H2	10	#4	2	9'-4"	62
H3	20	#4	3	8'-10"	118
K1	16	#4	STR	3'-3"	35
S1	56	#4	4	10'-5"	390
S2	56	#4	5	3'-2"	118
S3	28	#4	6	6'-6"	122
★ V1	53	#4	STR	6'-2"	218
★ V2	53	#4	STR	6'-5"	227

REINFORCING STEEL (FOR END BENT NO. 1) 2923 LBS.

REINFORCING STEEL (FOR END BENT NO. 2) 2932 LBS.

CLASS A CONCRETE BREAKDOWN (FOR END BENT NO. 1)

POUR #1 CAP, LOWER PART OF WINGS & COLLARS 21.9 C.Y.

POUR #2 UPPER PART OF WINGS 2.2 C.Y.

TOTAL CLASS A CONCRETE 24.1 C.Y.

CLASS A CONCRETE BREAKDOWN (FOR END BENT NO. 2)

POUR #1 CAP, LOWER PART OF WINGS & COLLARS 21.9 C.Y.

POUR #2 UPPER PART OF WINGS 2.4 C.Y.

TOTAL CLASS A CONCRETE 24.3 C.Y.

★ V1 BARS ARE LOCATED IN END BENT No. 1 WINGS
V2 BARS ARE LOCATED IN END BENT No. 2 WINGS

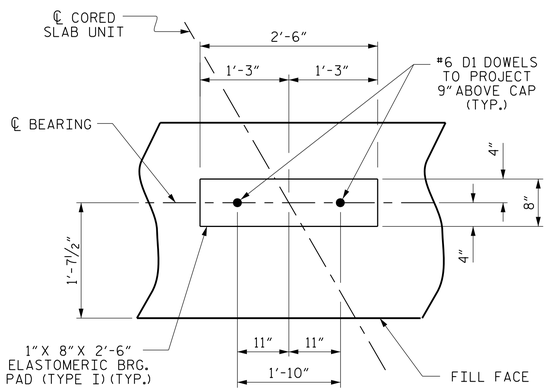

DETAIL "A"

(END BENT No. 1 SHOWN, END BENT No. 2 SIMILAR BY ROTATION)

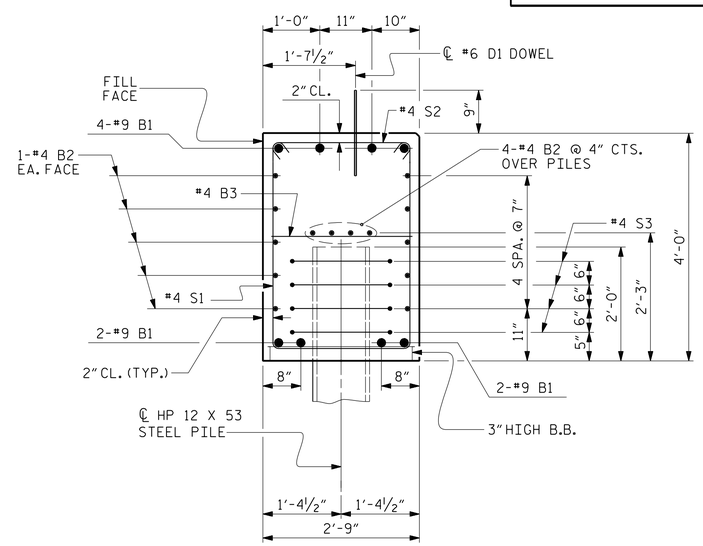

SECTION A-A

(CONCRETE COLLAR NOT SHOWN FOR CLARITY. SEE "CORROSION PROTECTION FOR STEEL PILES DETAIL.")

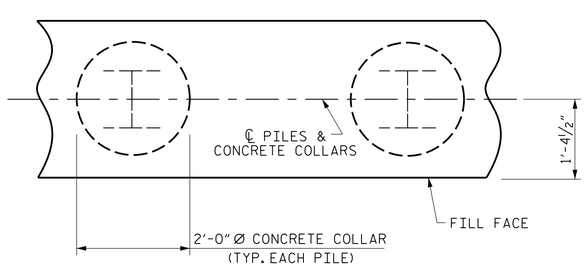

PLAN

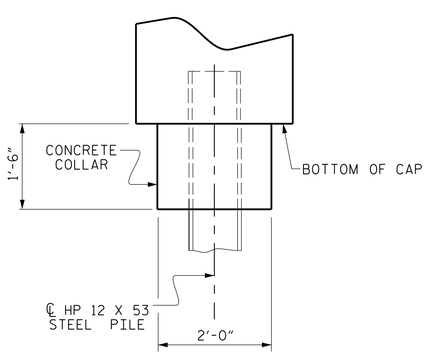

ELEVATION

CORROSION PROTECTION FOR STEEL PILES DETAIL

(END BENT No. 1 SHOWN, END BENT No. 2 SIMILAR BY ROTATION)

PROJECT NO. 17BP.4.R.69

NASH COUNTY

STATION: 13+20.00 -L-

SHEET 4 OF 4

STATE OF NORTH CAROLINA
DEPARTMENT OF TRANSPORTATION
RALEIGH

SUBSTRUCTURE

END BENT No. 1 & 2 DETAILS

DOCUMENT NOT CONSIDERED FINAL UNLESS ALL SIGNATURES COMPLETED

THIS STANDARD DRAWING REVIEWED & ADOPTED FOR USE AT THE REFERENCED LOCATION BY THE UNDERSIGNED:

NORTH CAROLINA PROFESSIONAL SEAL 19861 ENGINEER K. KEVIN AUSTIN
DocuSigned by: K. Kevin Austin
C2F7B372DEAA468...
1/3/2017

PLANS PREPARED BY:
CALYX ENGINEERS + CONSULTANTS
6750 TRYON ROAD
CARY, NC 27518
phone: 919.851.1912
CALYXengineers.com
NC License # F-1333

REVISIONS						SHEET NO.
NO.	BY:	DATE:	NO.	BY:	DATE:	S-15
1			3			TOTAL SHEETS
2			4			20

STD. NO. EB_33_120S4

ASSEMBLED BY :	W. B. ALLEN	DATE :	6/16
CHECKED BY :	W. A. DAVIS	DATE :	7/16
DRAWN BY :	WJH 12/11		
CHECKED BY :	AAC 12/11		

1/3/2017 9:08:19 AM R:\Structures\17BP.4.R.69_SMU_EB2_04.dgn