DocuSign Envelope ID: 6598CDCB-6462-437F-96B1-F480334A07D2

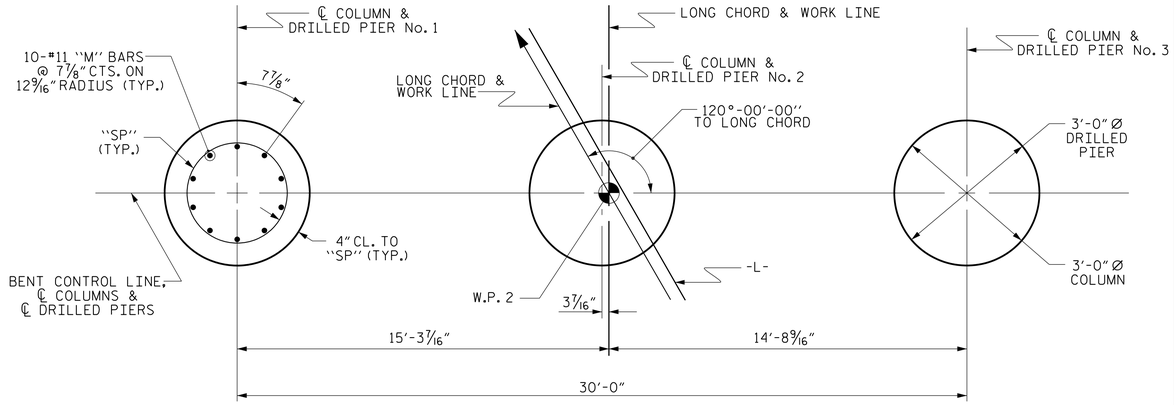

PLAN OF DRILLED PIERS & COLUMNS

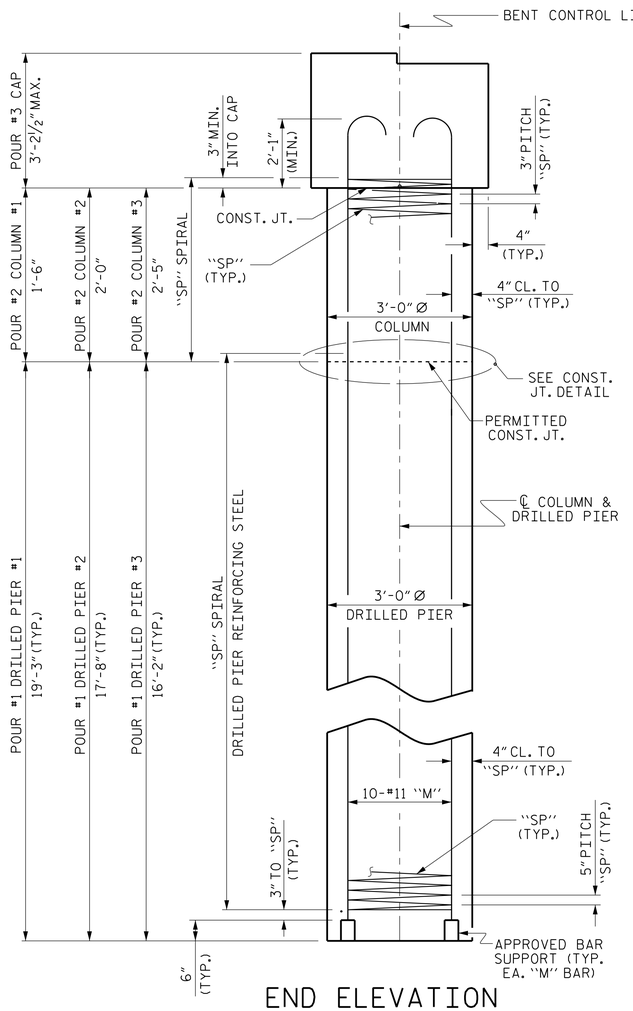

END ELEVATION

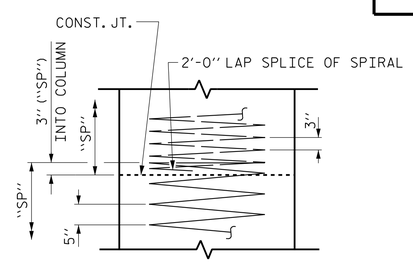

PERMITTED CONSTRUCTION JOINT DETAIL

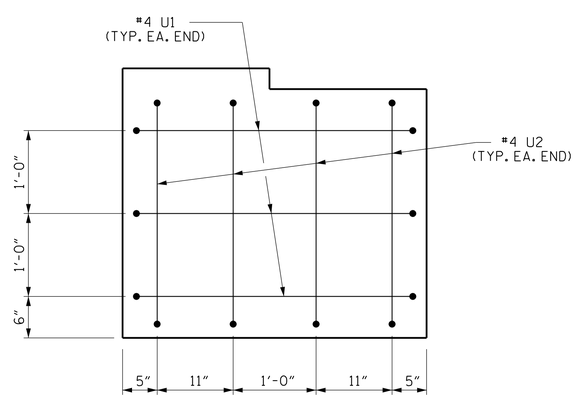

END OF CAP VIEW

(TYPICAL BOTH ENDS)

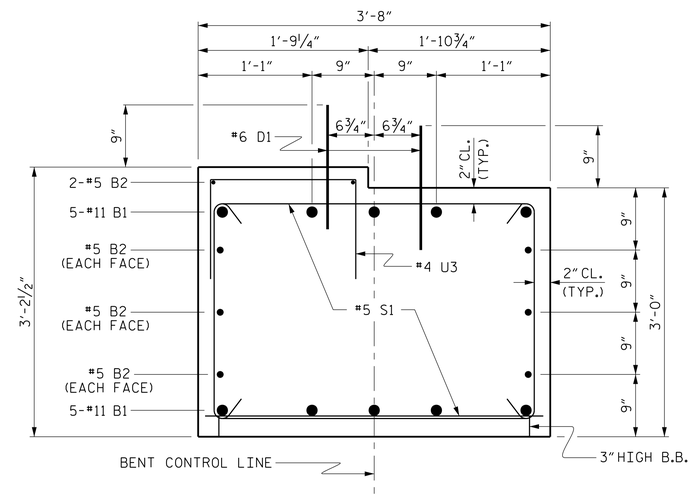

SECTION THRU CAP

BAR TYPES

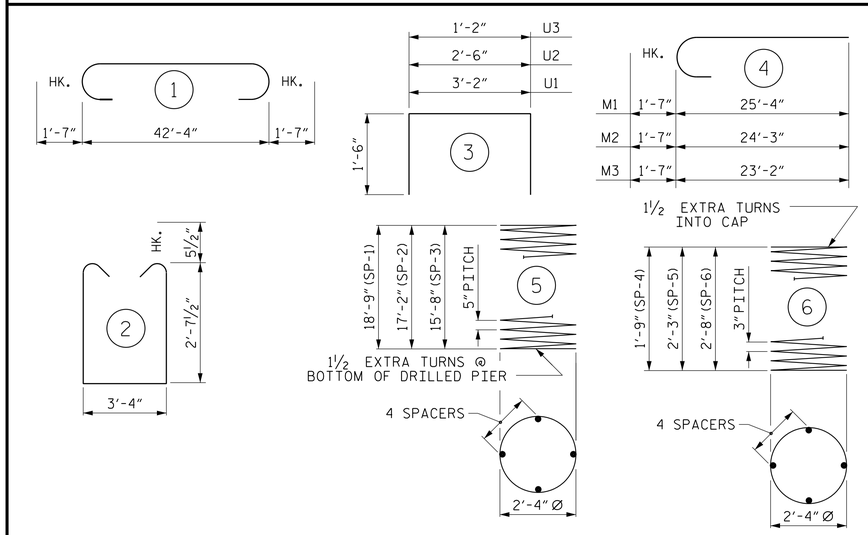

ALL BAR DIMENSIONS ARE OUT TO OUT

BILL OF MATERIAL FOR ONE BENT

BAR	NO.	SIZE	TYPE	LENGTH	WEIGHT
B1	10	#11	1	45'-6"	2417
B2	8	#5	STR	42'-6"	355
D1	44	#6	STR	1'-6"	99
M1	10	#11	4	26'-11"	1430
M2	10	#11	4	25'-10"	1373
M3	10	#11	4	24'-9"	1315
S1	70	#5	2	9'-6"	694
U1	6	#4	3	6'-2"	25
U2	8	#4	3	5'-6"	29
U3	43	#4	3	4'-2"	120

REINFORCING STEEL (FOR ONE BENT) 7857 LBS.

SP-1	1	✳	5	337'-5"	352
SP-2	1	✳	5	308'-9"	322
SP-3	1	✳	5	287'-2"	300
SP-4	1	✳✳	6	64'-11"	43
SP-5	1	✳✳	6	79'-3"	53
SP-6	1	✳✳	6	93'-8"	63

SPIRAL COLUMN REINFORCING STEEL (FOR ONE BENT) 1133 LBS.

✳ THE SP-1, SP-2 & SP-3 SPIRAL REINFORCING STEEL SHALL BE W31 OR D-31 COLD DRAWN WIRE OR #5 PLAIN OR DEFORMED BAR

✳✳ THE SP-4, SP-5 & SP-6 SPIRAL REINFORCING STEEL SHALL BE W20 OR D-20 COLD DRAWN WIRE OR #4 PLAIN OR DEFORMED BAR

CLASS A CONCRETE BREAKDOWN (FOR ONE BENT)

POUR #2 (COLUMNS)	1.5 C.Y.
POUR #3 (CAP)	18.0 C.Y.
TOTAL CLASS A CONCRETE	19.5 C.Y.

DRILLED PIERS: (FOR ONE BENT)

DRILLED PIER CONCRETE POUR #1 (DRILLED PIERS)	13.9 C.Y.
3'-0" Ø DRILLED PIER NOT IN SOIL	29 LIN. FT.
3'-0" Ø DRILLED PIER IN SOIL	24.1 LIN. FT.
PERMANENT STEEL CASING FOR 3'-0" Ø DRILLED PIER	24.4 LIN. FT.
CSL TUBES	230.3 LIN. FT.
SID INSPECTIONS	1 EACH
CSL TESTING	1 EACH

PROJECT NO. 17BP.4.R.69

NASH COUNTY

STATION: 13+20.00 -L-

SHEET 2 OF 2

STATE OF NORTH CAROLINA
DEPARTMENT OF TRANSPORTATION
RALEIGH

SUBSTRUCTURE

BENT No. 1

DOCUMENT NOT CONSIDERED FINAL UNLESS ALL SIGNATURES COMPLETED

THIS STANDARD DRAWING REVIEWED & ADOPTED FOR USE AT THE REFERENCED LOCATION BY THE UNDERSIGNED:

NORTH CAROLINA PROFESSIONAL SEAL 19861 ENGINEER KEVIN AUSTIN

Redesigned by: K. Kevin Austin
F6E778372OEAA6BL...
1/3/2017

PLANS PREPARED BY:
CALYX ENGINEERS + CONSULTANTS
6750 TRYON ROAD
CARY, NC 27518
phone: 919.851.1912
CALYXengineers.com
NC License # F-1333

REVISIONS								SHEET NO.
NO.	BY:	DATE:	NO.	BY:	DATE:			S-17
1			3					TOTAL SHEETS
2			4					20

ASSEMBLED BY :	W. B. ALLEN	DATE :	8/16
CHECKED BY :	Z. H. BROWN	DATE :	9/16
DRAWN BY :	DGE	03/10	
CHECKED BY :	MKT	03/10	

1/3/2017 9:08:23 AM R:\Structures\17BP.4.R.69_SMU_B1_02.dgn

STD. NO. DP_BT_33_120S_<50'