DocuSign Envelope ID: F90362E1-E5FC-455F-8E38-FDBB4B7C6599

CALYX
ENGINEERS + CONSULTANTS
6750 TRYON ROAD
CARY, NC 27518
phone: 919.851.1912
CALYXengineers.com
NC License # F-1333

PROJECT REFERENCE NO.	SHEET NO.
17BP.4.R.69	2A-1
ROADWAY DESIGN ENGINEER	PAVEMENT DESIGN ENGINEER

NORTH CAROLINA PROFESSIONAL SEAL 15759 ENGINEER STEPHEN C. BRONK
Documents not to be issued or altered by the signature of the seal holder.
1/20/2017

6/2/99

PAVEMENT SCHEDULE

C1	PROP. APPROX. 1 1/2″ ASPHALT CONCRETE SURFACE COURSE TYPE SF9.5A, AT AN AVERAGE RATE OF 165 LBS. PER SQ. YD.
C2	PROP. APPROX. 3″ ASPHALT CONCRETE SURFACE COURSE TYPE SF9.5A, AT AN AVERAGE RATE OF 165 LBS. PER SQ. YD. IN EACH OF TWO LAYERS.
C3	PROP. VAR. DEPTH ASPHALT CONCRETE SURFACE COURSE TYPE SF9.5A, AT AN AVERAGE RATE OF 110 LBS. PER SQ. YD. PER 1″ DEPTH. TO BE PLACED IN LAYERS NOT TO EXCEED 1.5″ IN DEPTH.
E1	PROP. APPROX. 6″ ASPHALT CONCRETE BASE COURSE, TYPE B25.0B, AT AN AVERAGE RATE OF 342 LBS. PER SQ. YD. IN EACH OF TWO LAYERS.
E2	PROP. VAR. DEPTH ASPHALT CONCRETE BASE COURSE, TYPE B25.0B, AT AN AVERAGE RATE OF 114 LBS. PER SQ. YD. PER 1″ DEPTH. TO BE PLACE IN LAYERS NOT LESS THAN 3″ IN DEPTH OR GREATER THAN 5½″ IN DEPTH.
R	PROP. SHOULDER BERM GUTTER
T	EARTH MATERIAL.
U	EXISTING PAVEMENT.
W	VARIABLE DEPTH ASPHALT PAVEMENT (SEE WEDGING DETAILS)

NOTE: PAVEMENT EDGE SLOPES ARE 1:1 UNLESS SHOWN OTHERWISE.

–L– (SR 1109 STONEY HILL CHURCH RD)

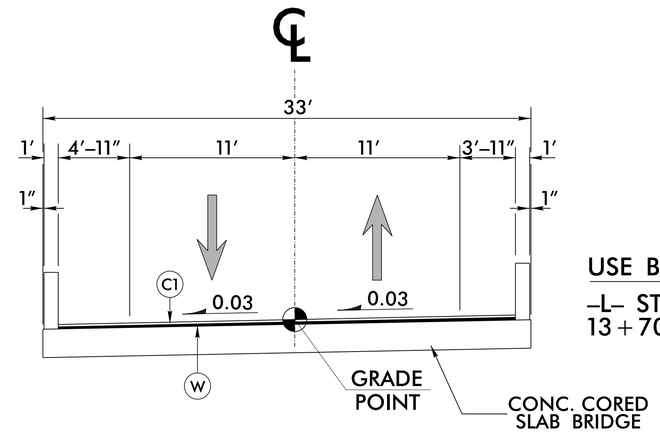

USE BRIDGE SKETCH NO. 1 AS FOLLOWS:

–L– STA. 12 + 69.92 (BEGIN BRIDGE) TO 13 + 70.07 (END BRIDGE)

BRIDGE SKETCH NO. 1
BRIDGE #62

–L– (SR 1109 STONEY HILL CHURCH RD)

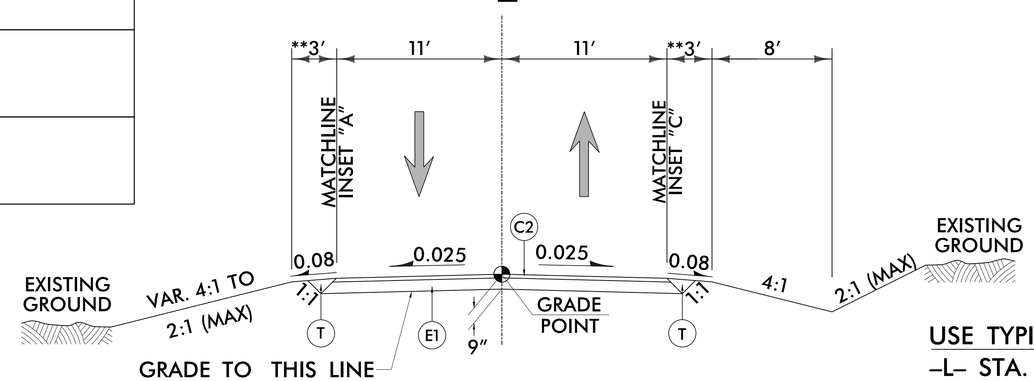

TYPICAL SECTION NO. 1

USE TYPICAL SECTION NO. 1 AS FOLLOWS:

–L– STA. 10 + 20.00 TO 11 + 10.00
–L– STA. 14 + 90.00 TO 16 + 20.00

**NOTE 1: USE INSET "A" FOR
LEFT SIDE GUARDRAIL LOCATIONS
WITHOUT SHOULDER BERM GUTTER

**NOTE 2: USE INSET "B" FOR
LEFT SIDE GUARDRAIL LOCATIONS
WITH SHOULDER BERM GUTTER

**NOTE 3: USE INSET "C" FOR
RIGHT SIDE GUARDRAIL LOCATIONS
WITHOUT SHOULDER BERM GUTTER

INSET "A"

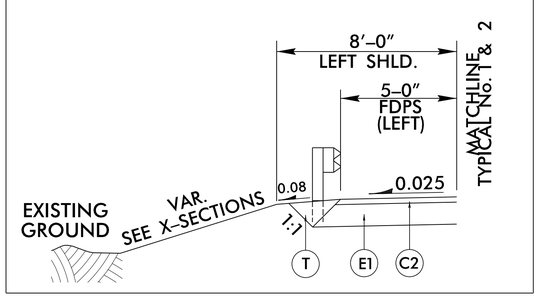

INSET "B"

SHOULDER BERM LOCATIONS:
–L– STA. 13 + 90 TO 14 + 11 (LT.)

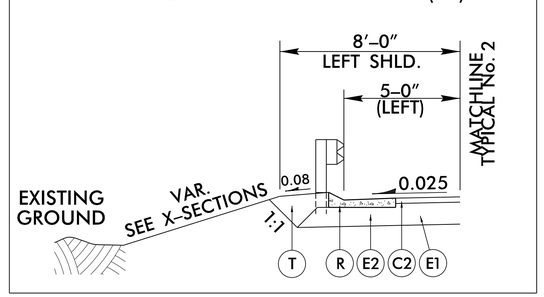

INSET "C"

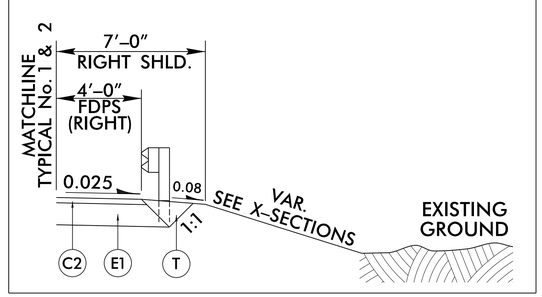

1/20/2017
H:\Roadway\Proj\Nash 62_RDY_TYP.dgn
bpike