DocuSign Envelope ID: 6598CDCB-6462-437F-96B1-F480334A07D2

NOTES :

FOR BERM WIDTH DIMENSIONS, SEE GENERAL DRAWING.

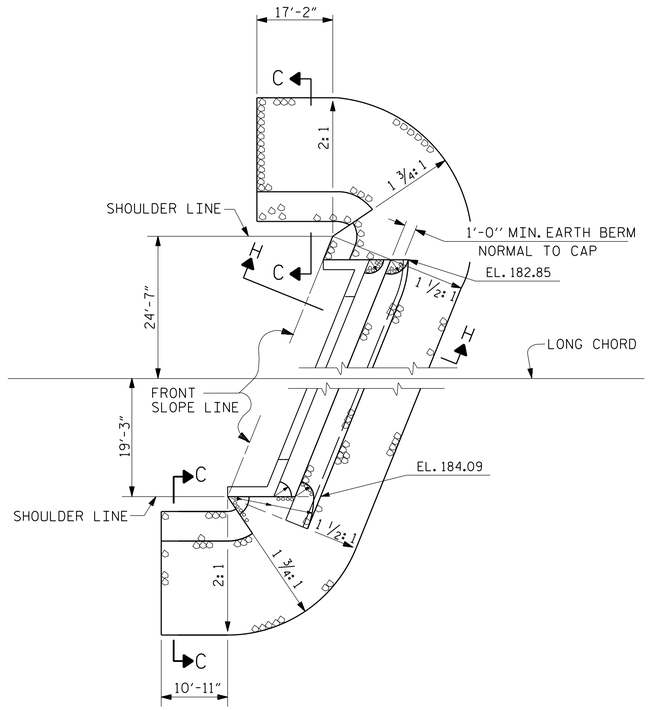

END BENT 1

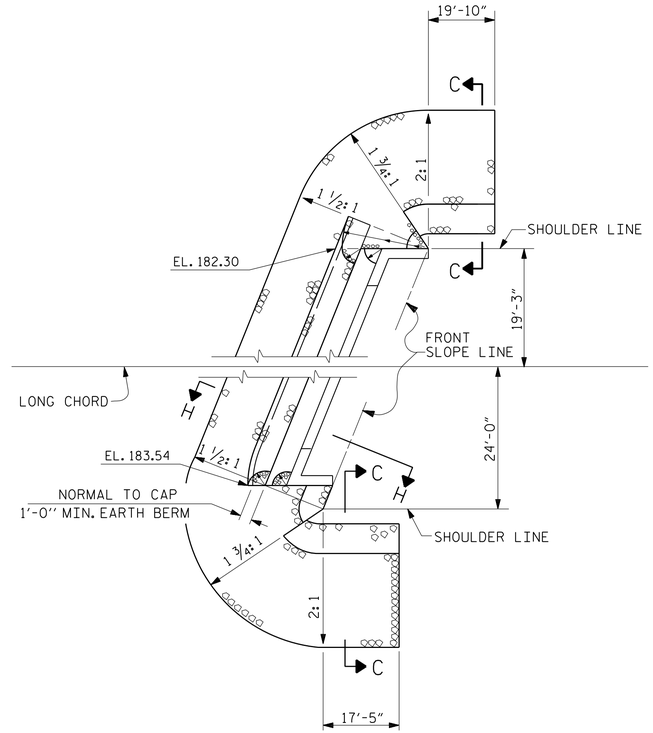

END BENT 2

SHOULDER RIP RAP IS HIGHER THAN BERM RIP RAP

ESTIMATED QUANTITIES		
BRIDGE @ STA. 13+20.00 -L-	RIP RAP CLASS II (2'-0" THICK)	GEOTEXTILE FOR DRAINAGE
	TONS	SQUARE YARDS
END BENT 1	106	118
END BENT 2	141	157

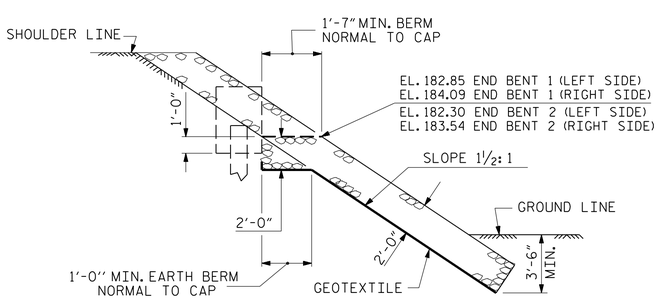

SECTION H-H

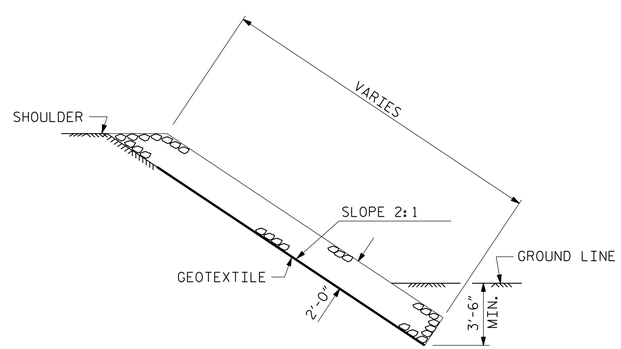

SECTION C-C

PROJECT NO. 17BP.4.R.69

NASH COUNTY

STATION: 13+20.00 -L-

DOCUMENT NOT CONSIDERED FINAL UNLESS ALL SIGNATURES COMPLETED

THIS STANDARD DRAWING REVIEWED & ADOPTED FOR USE AT THE REFERENCED LOCATION BY THE UNDERSIGNED:

NORTH CAROLINA PROFESSIONAL SEAL 19661 ENGINEER L. KEVIN AUSTIN

DocuSigned by: L. Kevin Austin 1/3/2017

PLANS PREPARED BY:

CALYX ENGINEERS + CONSULTANTS
6750 TRYON ROAD
CARY, NC 27518
phone: 919.851.1912
CALYXengineers.com
NC License # F-1333

STATE OF NORTH CAROLINA
DEPARTMENT OF TRANSPORTATION
RALEIGH

STANDARD

RIP RAP DETAILS

REVISIONS							SHEET NO.
NO.	BY:	DATE:	NO.	BY:	DATE:		S-18
1			3				TOTAL SHEETS
2			4				20

ASSEMBLED BY : W. B. ALLEN		DATE : 7/16	
CHECKED BY : W. A. DAVIS		DATE : 7/16	
DRAWN BY : REK 1/84	REV. 5/11/06R	TLA/GM	
CHECKED BY : RDU 1/84	REV. 10/1/11	MAA/GM	
	REV. 12/21/11	MAA/GM	

STD. NO. RR1

1/3/2017 1:16:09 AM R:\Structures\17BP.4.R.69_SMU_RR_01.dgn