DocuSign Envelope ID: 6598CDCB-6462-437F-96B1-F480334A07D2

NOTES

STIRRUPS IN CAP MAY BE SHIFTED AS NECESSARY TO CLEAR DOWELS.

THE CONCRETE IN THE SHADED AREA OF THE WING SHALL BE POURED AFTER THE VERTICAL CONCRETE BARRIER RAIL IS CAST IF SLIP FORMING IS USED.

FOR PILE SPLICE DETAILS, SEE SHEET 4 OF 4.

FOR WING DETAILS, SEE SHEET 3 OF 4.

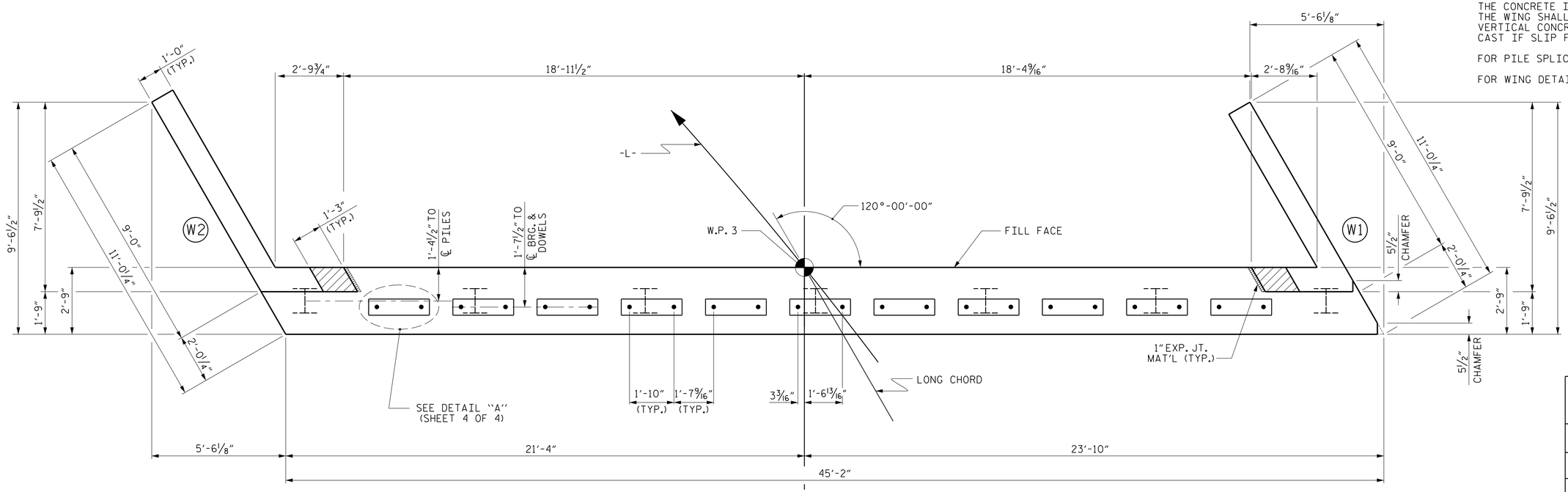

PLAN

TOP OF PILE ELEVATIONS	
1	183.32
2	183.51
3	183.70
4	183.89
5	184.09
6	184.28
7	184.47

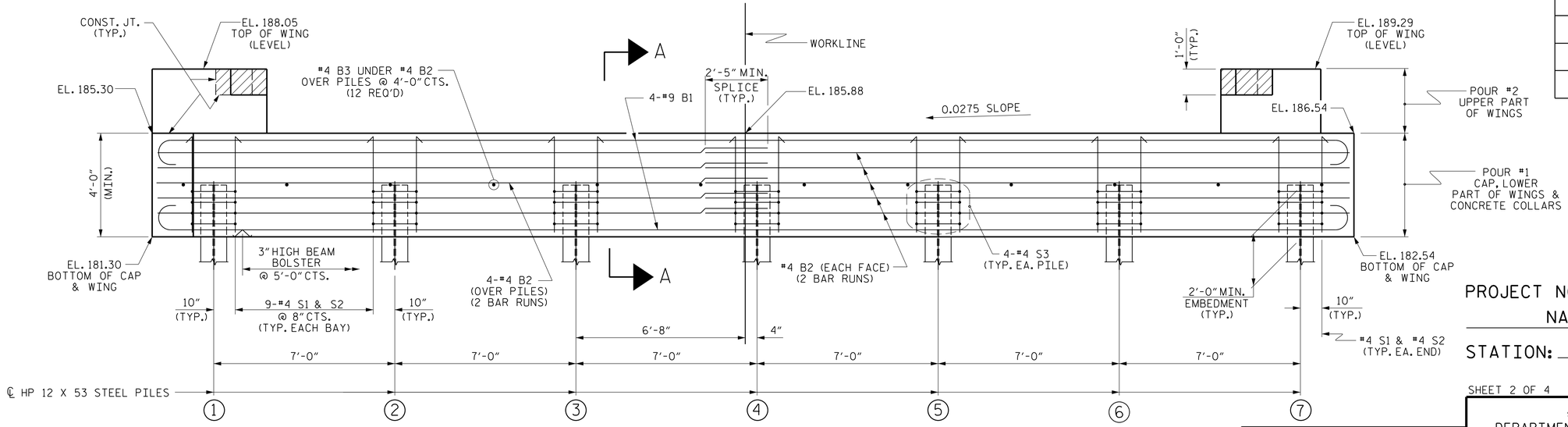

ELEVATION

WINGS NOT SHOWN FOR CLARITY.
FOR SECTION A-A, SEE SHEET 4 OF 4.
CONCRETE COLLARS FOR STEEL PILES NOT SHOWN IN PLAN AND ELEVATION VIEWS FOR CLARITY.
SEE "CORROSION PROTECTION FOR STEEL PILES DETAIL", SHEET 4 OF 4.

PROJECT NO. 17BP.4.R.69
NASH COUNTY
STATION: 13+20.00 -L-

SHEET 2 OF 4

PLANS PREPARED BY:
CALYX ENGINEERS + CONSULTANTS
6750 TRYON ROAD
CARY, NC 27518
phone: 919.851.1912
CALYXengineers.com
NC License # F-1333

DOCUMENT NOT CONSIDERED FINAL UNLESS ALL SIGNATURES COMPLETED

THIS STANDARD DRAWING REVIEWED & ADOPTED FOR USE AT THE REFERENCED LOCATION BY THE UNDERSIGNED:

NORTH CAROLINA PROFESSIONAL SEAL 19061 ENGINEER KEVIN AUSTIN
DocuSigned by: K. Kevin Austin
F2C7B372DEA486...
1/3/2017

STATE OF NORTH CAROLINA
DEPARTMENT OF TRANSPORTATION
RALEIGH

SUBSTRUCTURE

END BENT No. 2

REVISIONS								SHEET NO.
NO.	BY:	DATE:	NO.	BY:	DATE:			S-13
1			3					TOTAL SHEETS
2			4					20

ASSEMBLED BY : W. B. ALLEN		DATE : 6/16	
CHECKED BY : W. A. DAVIS		DATE : 7/16	
DRAWN BY : WJH	12/11	REV. 4/15	MAA/TMG
CHECKED BY : AAC	12/11		

STD. NO. EB_33_120S4

1/3/2017 9:08:16 AM R:\Structures\17BP.4.R.69_SMU_E2_02.dgn