This electronic collection of documents is provided for the convenience of the user and is Not a Certified Document –

The documents contained herein were originally issued and sealed by the individuals whose names and license numbers appear on each page, on the dates appearing with their signature on that page.
This file or an individual page shall not be considered a certified document.

TIP PROJECT: BP4.R014.1

CONTRACT: DD00375

See Sheet 1A For Index of Sheets

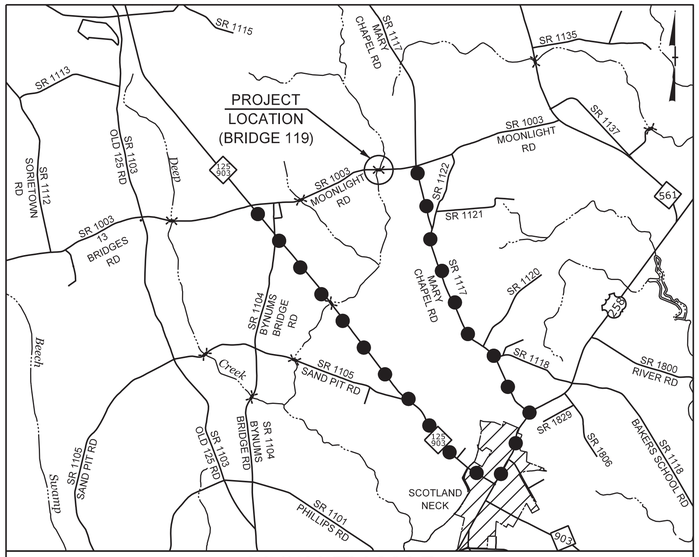

VICINITY MAP
(NOT TO SCALE)

DENOTES DETOUR ROUTE (LENGTH = APPROX. 9 MILES)

STATE OF NORTH CAROLINA
DIVISION OF HIGHWAYS

HALIFAX COUNTY

STATE	STATE PROJECT REFERENCE NO.	SHEET NO.	TOTAL SHEETS
N.C.	BP4.R014.1	1	

STATE PROJ. NO.	F.A. PROJ. NO.	DESCRIPTION
BP4.R014.1		PE
BP4.R014.2		R/W & UTILITIES
BP4.R014.3		CONSTRUCTION

LOCATION: REPLACE BRIDGE NO 119 ON SR 1003 (MOONLIGHT ROAD) OVER TRIBUTARY OF DEEP CREEK

TYPE OF WORK: GRADING, DRAINAGE, PAVING, AND STRUCTURE

NAD 83/2011

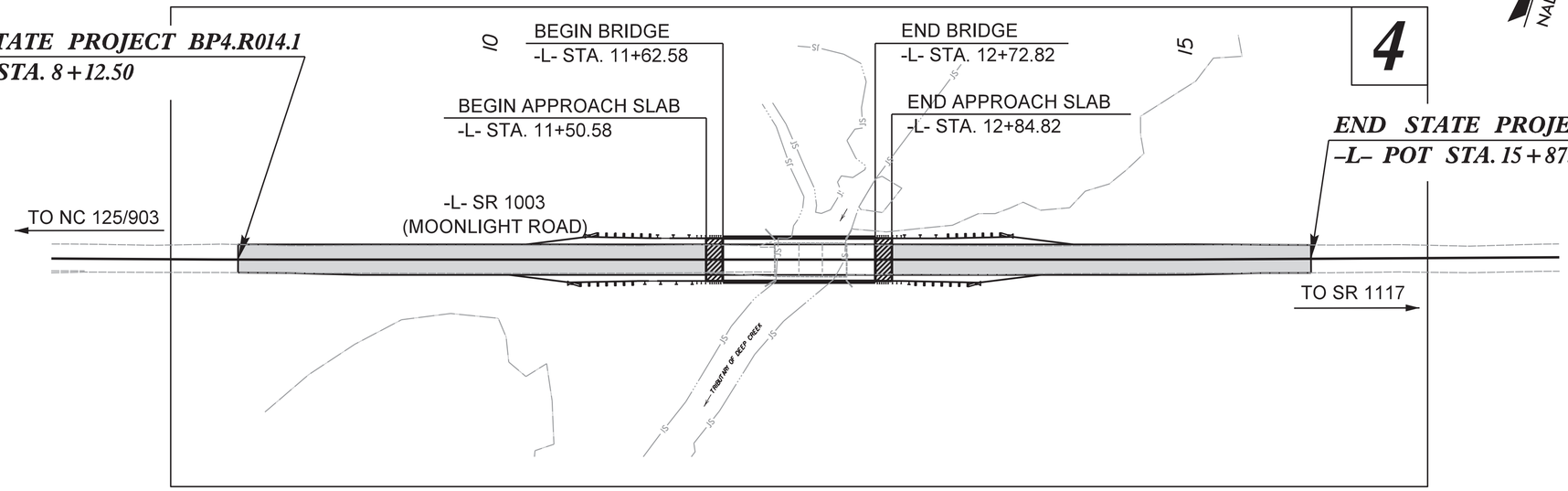

4

DOCUMENT NOT CONSIDERED FINAL UNLESS ALL SIGNATURES COMPLETED

GRAPHIC SCALES

30 15 0 30 60
PLANS

30 15 0 30 60
PROFILE (HORIZONTAL)

1 0.5 0 1 2
PROFILE (VERTICAL)

DESIGN DATA

ADT 2021 = < 1000
V = 60 MPH
FUNC CLASS = COLLECTOR
SUB REGIONAL TIER

PROJECT LENGTH

LENGTH ROADWAY STATE PROJECT BP4.R014	=	0.126 MILES
LENGTH STRUCTURES STATE PROJECT BP4.R014	=	0.021 MILES
TOTAL LENGTH STATE PROJECT BP4.R014	=	0.147 MILES

Prepared for:
HIGHWAY DIVISION 4
509 WARD BLVD
WILSON, NC 27895

2018 STANDARD SPECIFICATIONS

RIGHT OF WAY DATE:
MARCH 2022

LETTING DATE:
AUGUST 9, 2022

Plans Prepared By:
ALPHA & OMEGA GROUP
CIVIL | STRUCTURAL | WATER RESOURCES
ALPHA AND OMEGA GROUP, PC
4601 LAKE BOONE TRAIL, SUITE 3C, RALEIGH, NC 27607
Firm License No. C-1684 www.aogroup.com

TED L. BARTELT, PE
PROJECT ENGINEER

MICHAEL A. YOUNG, PE
ROADWAY PROJECT DESIGN ENGINEER

RUSSELL E. BROADWELL, PE
NCDOT CONTACT

HYDRAULICS ENGINEER
William S. Needham
Digitally signed by William S. Needham
Date: 2022.06.10 09:31:31 -04'00'
NORTH CAROLINA PROFESSIONAL SEAL 031746 ENGINEER WILLIAM S. NEEDHAM
P.E.
SIGNATURE:

ROADWAY DESIGN ENGINEER
Michael A. Young
Digitally signed by Michael A. Young
Date: 2022.06.10 09:22:26 -04'00'
NORTH CAROLINA PROFESSIONAL SEAL 022982 ENGINEER MICHAEL A. YOUNG
P.E.
SIGNATURE:

STATE OF NORTH CAROLINA DEPARTMENT OF TRANSPORTATION

$$$$$SYSTIME$$$$
$$$$$USERNAME$$$$
$$$$$DGN$$$$$

Prepared by:

ALPHA & OMEGA GROUP
CIVIL | STRUCTURAL | WATER RESOURCES
ALPHA AND OMEGA GROUP, PC
4601 LAKE BOONE TRAIL, SUITE 3C, RALEIGH, NC 27607
Firm License No. C-1684 www.aogroup.com

PROJECT REFERENCE NO.	SHEET NO.
BP4.R014	1A
R/W SHEET NO.	

ROADWAY DESIGN ENGINEER

NORTH CAROLINA PROFESSIONAL SEAL 022982 ENGINEER MICHAEL A YOUNG

DOCUMENT NOT CONSIDERED FINAL UNLESS ALL SIGNATURES COMPLETED

INDEX OF SHEETS

SHEET NUMBER	DESCRIPTION
1	TITLE SHEET
1A	INDEX OF SHEETS, GENERAL NOTES, AND STANDARD DRAWINGS
1B	CONVENTIONAL SYMBOLS
1C-1 THRU 1C-3	SURVEY CONTROL SHEETS
2A-1	PAVEMENT SCHEDULE AND TYPICAL SECTIONS
2C-1 THRU 2C-2	DETAILS FOR GUARDRAIL INSTALLATION & FOR GUARDRAIL STRUCTURE ANCHOR UNITS
2D-1	BRIDGE FLOODPLAIN EXCAVATION STABILIZATION DETAIL
2E-1	MODIFIED CONCRETE FLUME
3B-1	SUMMARIES OF GUARDRAIL, EARTHWORK, ASPHALT PAVEMENT REMOVAL, SHOULDER BERM GUTTER & DRAINAGE STRUCTURES
4 THRU 5	PLAN AND PROFILE SHEET
TMP-1 THRU TMP-4	TRAFFIC MANAGEMENT PLANS
PMP-1	PAVEMENT MARKING PLANS
EC-1 THRU EC-4	EROSION CONTROL PLANS
RF-1	REFORESTATION PLANS
UC-1 THRU UC-5	UTILITIES CONSTRUCTION PLANS
X-1 THRU X-12	CROSS-SECTIONS
S-1 THRU S-26	STRUCTURE PLANS

STANDARD SPECIFICATIONS

GENERAL NOTES: 2018 SPECIFICATIONS
EFFECTIVE: 01-16-2018
REVISED:

GRADE LINE:
GRADING AND SURFACING:

THE GRADE LINES SHOWN DENOTE THE FINISHED ELEVATION OF THE PROPOSED SURFACING AT GRADE POINTS SHOWN ON THE TYPICAL SECTIONS. GRADE LINES MAY BE ADJUSTED AT THEIR BEGINNING AND ENDING AND AT STRUCTURES AS DIRECTED BY THE ENGINEER IN ORDER TO SECURE A PROPER TIE-IN.

CLEARING:

CLEARING ON THIS PROJECT SHALL BE PERFORMED TO THE LIMITS ESTABLISHED BY METHOD III.

GUARDRAIL:

THE GUARDRAIL LOCATIONS SHOWN ON THE PLANS MAY BE ADJUSTED DURING CONSTRUCTION AS DIRECTED BY THE ENGINEER. THE CONTRACTOR SHOULD CONSULT WITH THE ENGINEER PRIOR TO ORDERING GUARDRAIL MATERIAL.

SUBSURFACE PLANS:

NO SUBSURFACE PLANS ARE AVAILABLE ON THIS PROJECT. THE CONTRACTOR SHOULD MAKE HIS OWN INVESTIGATION AS TO THE SUBSURFACE CONDITIONS.

END BENTS:

THE ENGINEER SHALL CHECK THE STRUCTURE END BENT PLANS, DETAILS, AND CROSS-SECTION PRIOR TO SETTING OF THE SLOPE STAKES FOR THE EMBANKMENT OR EXCAVATION APPROACHING A BRIDGE.

UTILITIES:

UTILITY OWNERS ON THIS PROJECT ARE

HALIFAX COUNTY - WATER.

ANY RELOCATION OF EXISTING UTILITIES WILL BE ACCOMPLISHED BY OTHERS, EXCEPT AS SHOWN ON THE PLANS.

RIGHT-OF-WAY MARKERS:

ALL RIGHT-OF-WAY MARKERS ON THIS PROJECT SHALL BE PLACED BY OTHERS.

LIST OF STANDARD DRAWINGS

EFF. 01-16-2018
REV.

2018 ROADWAY ENGLISH STANDARD DRAWINGS

The following Roadway Standards as appear in "Roadway Standard Drawings" Highway Design Branch - N. C. Department of Transportation - Raleigh, N. C., Dated January, 2018 are applicable to this project and by reference hereby are considered a part of these plans:

STD.NO. TITLE

DIVISION 2 - EARTHWORK
200.03 Method of Clearing - Method III
225.02 Guide for Grading Subgrade - Secondary and Local

DIVISION 4 - MAJOR STRUCTURES
422.02 Bridge Approach Fills - Type II Modified Approach Fill

DIVISION 6 - ASPHALT BASES AND PAVEMENTS
654.01 Pavement Repairs

DIVISION 7 - CONCRETE PAVEMENTS AND SHOULDERS
700.05 Tying Proposed Pavement to Existing

DIVISION 8 - INCIDENTALS
806.01 Concrete Right-of-Way Marker
846.01 Concrete Curb, Gutter and curb & Gutter
850.01 Concrete Paved Ditches
862.01 Guardrail Placement
862.02 Guardrail Installation
862.03 Structure Anchor Units
876.02 Guide for Rip Rap at Pipe Outlets

5/14/99
$$$$$$SYSTIME$$$$$$
$$$$$$USERNAME$$$$$$

12/2/2016

PROJECT REFERENCE NO.	SHEET NO.
BP4.R014	1-B

STATE OF NORTH CAROLINA, DIVISION OF HIGHWAYS

CONVENTIONAL PLAN SHEET SYMBOLS

Note: Not to Scale

***S.U.E. = Subsurface Utility Engineering**

BOUNDARIES AND PROPERTY:

- State Line
- County Line
- Township Line
- City Line
- Reservation Line
- Property Line
- Existing Iron Pin — EIP
- Computed Property Corner
- Property Monument — ECM
- Parcel/Sequence Number — 123
- Existing Fence Line
- Proposed Woven Wire Fence
- Proposed Chain Link Fence
- Proposed Barbed Wire Fence
- Existing Wetland Boundary — WLB
- Proposed Wetland Boundary — WLB
- Existing Endangered Animal Boundary — EAB
- Existing Endangered Plant Boundary — EPB
- Existing Historic Property Boundary — HPB
- Known Contamination Area: Soil — S
- Potential Contamination Area: Soil — S
- Known Contamination Area: Water — W
- Potential Contamination Area: Water — W
- Contaminated Site: Known or Potential

BUILDINGS AND OTHER CULTURE:

- Gas Pump Vent or U/G Tank Cap
- Sign — S
- Well — W
- Small Mine
- Foundation
- Area Outline
- Cemetery
- Building
- School
- Church
- Dam

HYDROLOGY:

- Stream or Body of Water
- Hydro, Pool or Reservoir
- Jurisdictional Stream — JS
- Buffer Zone 1 — BZ 1
- Buffer Zone 2 — BZ 2
- Flow Arrow
- Disappearing Stream
- Spring
- Wetland
- Proposed Lateral, Tail, Head Ditch — FLOW
- False Sump

RAILROADS:

- Standard Gauge — CSX TRANSPORTATION
- RR Signal Milepost — MILEPOST 35
- Switch — SWITCH
- RR Abandoned
- RR Dismantled

RIGHT OF WAY & PROJECT CONTROL:

- Secondary Horiz and Vert Control Point
- Primary Horiz Control Point
- Primary Horiz and Vert Control Point
- Exist Permanent Easment Pin and Cap
- New Permanent Easement Pin and Cap
- Vertical Benchmark
- Existing Right of Way Marker
- Existing Right of Way Line
- New Right of Way Line — RW
- New Right of Way Line with Pin and Cap — RW
- New Right of Way Line with Concrete or Granite R/W Marker — RW
- New Control of Access Line with Concrete C/A Marker — CA
- Existing Control of Access — CA
- New Control of Access — CA
- Existing Easement Line — E
- New Temporary Construction Easement — E
- New Temporary Drainage Easement — TDE
- New Permanent Drainage Easement — PDE
- New Permanent Drainage / Utility Easement — DUE
- New Permanent Utility Easement — PUE
- New Temporary Utility Easement — TUE
- New Aerial Utility Easement — AUE

ROADS AND RELATED FEATURES:

- Existing Edge of Pavement
- Existing Curb
- Proposed Slope Stakes Cut — C
- Proposed Slope Stakes Fill — F
- Proposed Curb Ramp — CR
- Existing Metal Guardrail
- Proposed Guardrail
- Existing Cable Guiderail
- Proposed Cable Guiderail
- Equality Symbol
- Pavement Removal

VEGETATION:

- Single Tree
- Single Shrub
- Hedge
- Woods Line
- Orchard
- Vineyard — Vineyard

EXISTING STRUCTURES:

MAJOR:

- Bridge, Tunnel or Box Culvert — CONC
- Bridge Wing Wall, Head Wall and End Wall — CONC WW

MINOR:

- Head and End Wall — CONC HW
- Pipe Culvert
- Footbridge
- Drainage Box: Catch Basin, DI or JB — CB
- Paved Ditch Gutter
- Storm Sewer Manhole — S
- Storm Sewer — S

UTILITIES:

POWER:

- Existing Power Pole
- Proposed Power Pole
- Existing Joint Use Pole
- Proposed Joint Use Pole
- Power Manhole — P
- Power Line Tower
- Power Transformer
- U/G Power Cable Hand Hole
- H-Frame Pole
- U/G Power Line LOS B (S.U.E.*) — P
- U/G Power Line LOS C (S.U.E.*) — P
- U/G Power Line LOS D (S.U.E.*) — P

TELEPHONE:

- Existing Telephone Pole
- Proposed Telephone Pole
- Telephone Manhole — T
- Telephone Pedestal — T
- Telephone Cell Tower
- U/G Telephone Cable Hand Hole — HH
- U/G Telephone Cable LOS B (S.U.E.*) — T
- U/G Telephone Cable LOS C (S.U.E.*) — T
- U/G Telephone Cable LOS D (S.U.E.*) — T
- U/G Telephone Conduit LOS B (S.U.E.*) — TC
- U/G Telephone Conduit LOS C (S.U.E.*) — TC
- U/G Telephone Conduit LOS D (S.U.E.*) — TC
- U/G Fiber Optics Cable LOS B (S.U.E.*) — T FO
- U/G Fiber Optics Cable LOS C (S.U.E.*) — T FO
- U/G Fiber Optics Cable LOS D (S.U.E.*) — T FO

WATER:

- Water Manhole — W
- Water Meter
- Water Valve
- Water Hydrant
- U/G Water Line LOS B (S.U.E*) — W
- U/G Water Line LOS C (S.U.E*) — W
- U/G Water Line LOS D (S.U.E*) — W
- Above Ground Water Line — A/G Water

TV:

- TV Pedestal — C
- TV Tower
- U/G TV Cable Hand Hole — HH
- U/G TV Cable LOS B (S.U.E.*) — TV
- U/G TV Cable LOS C (S.U.E.*) — TV
- U/G TV Cable LOS D (S.U.E.*) — TV
- U/G Fiber Optic Cable LOS B (S.U.E.*) — TV FO
- U/G Fiber Optic Cable LOS C (S.U.E.*) — TV FO
- U/G Fiber Optic Cable LOS D (S.U.E.*) — TV FO

GAS:

- Gas Valve
- Gas Meter
- U/G Gas Line LOS B (S.U.E.*) — G
- U/G Gas Line LOS C (S.U.E.*) — G
- U/G Gas Line LOS D (S.U.E.*) — G
- Above Ground Gas Line — A/G Gas

SANITARY SEWER:

- Sanitary Sewer Manhole
- Sanitary Sewer Cleanout
- U/G Sanitary Sewer Line — SS
- Above Ground Sanitary Sewer — A/G Sanitary Sewer
- SS Forced Main Line LOS B (S.U.E.*) — FSS
- SS Forced Main Line LOS C (S.U.E.*) — FSS
- SS Forced Main Line LOS D (S.U.E.*) — FSS

MISCELLANEOUS:

- Utility Pole
- Utility Pole with Base
- Utility Located Object
- Utility Traffic Signal Box — S
- Utility Unknown U/G Line LOS B (S.U.E.*) — ?UTL
- U/G Tank; Water, Gas, Oil
- Underground Storage Tank, Approx. Loc. — UST
- A/G Tank; Water, Gas, Oil
- Geoenvironmental Boring
- U/G Test Hole LOS A (S.U.E.*)
- Abandoned According to Utility Records — AATUR
- End of Information — E.O.I.

6/2/99

SURVEY CONTROL SHEET

W/ EXISTING CENTERLINE ALIGNMENTS PRIOR TO CONSTRUCTION

PROJECT REFERENCE NO.	SHEET NO.
BP4.R014	IC-1

Location and Surveys

JoynerKeeny, PLLC
1051 N. Winstead Avenue
Rocky Mount, NC 27804
252-977-3124
North Carolina Firm Number P-0551

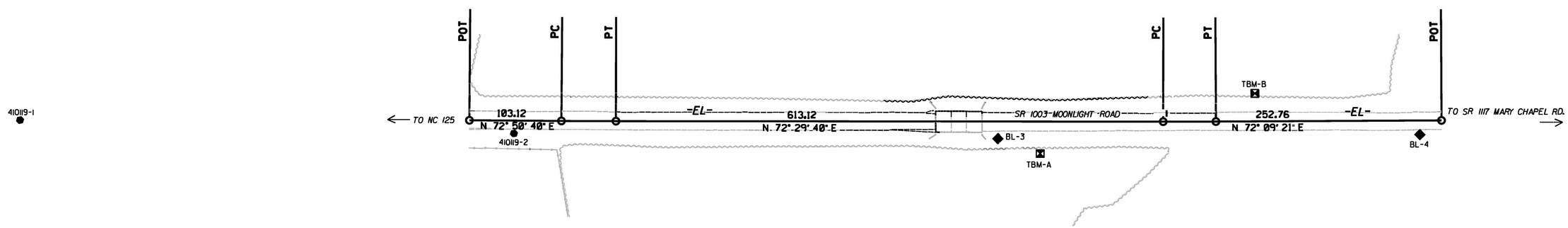

SEE SHEETS RW02C-2, RW02C-3 FOR FURTHER ALIGNMENT DETAILS

NOTES:

1. PROJECT CONTROL WAS ESTABLISHED USING GNSS, THE GLOBAL NAVIGATION SATELLITE SYSTEM.
2. THE SURVEY CONTROL DATA FOR THIS PROJECT HAS BEEN COMPILED FROM VARIOUS SOURCES. IF FURTHER INFORMATION REGARDING PROJECT CONTROL IS NEEDED, PLEASE CONTACT THE LOCATION AND SURVEYS UNIT.

22-APR-2019 16:57
z:\CAD\2019\190029A_NCDOT_410119_CON_Halifax\DGN\WORK\RW02C\410119_ls_rw02c-1.dgn
rpouthress AT JKA-012

PROJECT REFERENCE NO.	SHEET NO.
BP4.R014	1C-2

Location and Surveys

JoynerKeeny, PLLC
1051 N. Winstead Avenue
Rocky Mount, NC 27804
252-977-3124
North Carolina Firm Number P-0551

SURVEY CONTROL SHEET

W/ EXISTING CENTERLINE ALIGNMENTS PRIOR TO CONSTRUCTION

BL

POINT	DESC.	NORTH	EAST	ELEVATION
1	410119-1	889710.5419	2450412.0261	115.89
2	410119-2	889863.0990	2450944.1890	103.80
3	BL-3	890021.5339	2451462.9895	102.93
4	BL-4	890168.3254	2451912.0114	108.55

31 ELEVATION = 102.61
N 890020 E 2451513
TBM-A RR SPIKE IN BASE OF 30' GUM

32 ELEVATION = 106.82
N 890156 E 2451722
TBM-B RR SPIKE IN BASE OF 20" GUM

NOTES:

1. PROJECT CONTROL WAS ESTABLISHED USING GNSS, THE GLOBAL NAVIGATION SATELLITE SYSTEM.
2. THE SURVEY CONTROL DATA FOR THIS PROJECT HAS BEEN COMPILED FROM VARIOUS SOURCES. IF FURTHER INFORMATION REGARDING PROJECT CONTROL IS NEEDED, PLEASE CONTACT THE LOCATION AND SURVEYS UNIT.

REVISIONS

6/2/99

17-APR-2019 15:46
Z:\CAD\2019\19B0029A-NCDOT_410119_CON_Halifax\DGN\WORK\RW02C\410119_ls_rw02c-2.dgn
rpouthress AT JKA-012

PROJECT REFERENCE NO.	SHEET NO.
BP4.R014	1C-3

Location and Surveys

JoynerKeeny, PLLC
1051 N. Winstead Avenue
Rocky Mount, NC 27804
252-977-3124
North Carolina Firm Number P-0551

SURVEY CONTROL SHEET

W/ EXISTING CENTERLINE ALIGNMENTS PRIOR TO CONSTRUCTION

EL POINT	N	E	BEARING	DIST	DELTA	D	L	T	R
POT	889862.227	2450892.062							
LINE			N 72°50'39.8" E	103.12					
PC	889892.644	2450990.594							
CURVE			N 72°40'09.7" E	61.10	00°21'00.2"(LT)	00°34'22.6"	61.10	30.55	10000.00
PT	889910.845	2451048.919							
LINE			N 72°29'39.5" E	613.12					
PC	890095.273	2451633.648							
CURVE			N 72°19'30.3" E	59.07	00°20'18.4"(LT)	00°34'22.6"	59.07	29.54	10000.00
PT	890113.208	2451689.931							
LINE			N 72°09'21.1" E	252.76					
POT	890190.661	2451930.532							

NOTES:

1. PROJECT CONTROL WAS ESTABLISHED USING GNSS, THE GLOBAL NAVIGATION SATELLITE SYSTEM.
2. THE SURVEY CONTROL DATA FOR THIS PROJECT HAS BEEN COMPILED FROM VARIOUS SOURCES. IF FURTHER INFORMATION REGARDING PROJECT CONTROL IS NEEDED, PLEASE CONTACT THE LOCATION AND SURVEYS UNIT.

REVISIONS

6/2/99

17-APR-2019 15:42
V:\CAD\2019\190029A_NCDOT_410119_CON_Halifax\DGN\WORK\RW02C\410119_ls_rw02c-3.dgn
rpouthress AT JKA-012

5/14/99

PRELIMINARY PAVEMENT SCHEDULE	
C1	PROP. APPROX. 1.5″ ASPHALT CONCRETE SURFACE COURSE, TYPE S9.5B, AT AN AVERAGE RATE OF 165 LBS. PER SQ. YD. IN ONE LAYER.
C2	PROP. APPROX. 3″ ASPHALT CONCRETE SURFACE COURSE, TYPE S9.5B, AT AN AVERAGE RATE OF 165 LBS. PER SQ. YD. IN EACH OF TWO LAYERS.
C3	PROP. VAR. DEPTH ASPHALT CONCRETE SURFACE COURSE, TYPE S9.5B, AT AN AVERAGE RATE OF 110 LBS. PER SQ. YD. PER 1″ DEPTH. TO BE PLACED IN LAYERS NOT TO EXCEED 1½″ IN DEPTH.
E1	PROP. APPROX 4″ ASPHALT CONCRETE BASE COURSE, TYPE B25.0C, AT AN AVERAGE RATE OF 456 LBS. PER SQ. YD.
E2	PROP. VAR. DEPTH ASPHALT CONCRETE BASE COURSE, TYPE B25.0C, AT AN AVERAGE RATE OF 114 LBS. PER SQ. YD. PER 1″ DEPTH. TO BE PLACED IN LAYERS NOT LESS THAN 3″ IN DEPTH OR GREATER THAN 5½″ IN DEPTH.
R	PROP. SHOULDER BERM GUTTER
T	EARTH MATERIAL
U	EXISTING PAVEMENT
W	VARIABLE DEPTH ASPHALT PAVEMENT (SEE STANDARD WEDGING DETAIL ON THIS PAGE.)
Y	INCIDENTAL MILLING

NOTE: ALL PAVEMENT EDGE SLOPES ARE 1:1 UNLESS SHOWN OTHERWISE

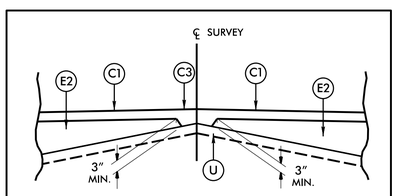

Detail Showing Method of Wedging on Roadway

INSET "A"

SHOULDER BERM LOCATIONS:
-L- STA. 11+15+/- TO 11+50.58 (LT)
-L- STA. 11+05+/- TO 11+50.58 (RT)

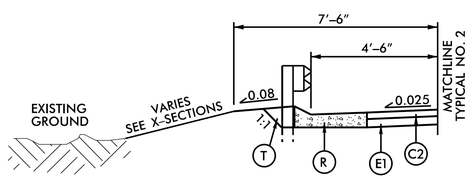

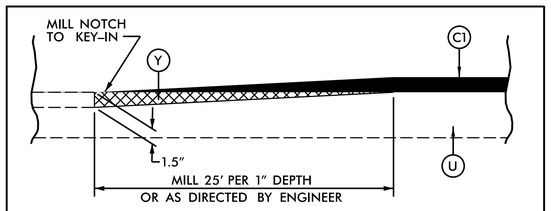

PROFILE KEY–IN DETAIL

-L- STA. 8+12.50 TO 8+50.00
-L- STA. 15+50.00 TO 15+87.50

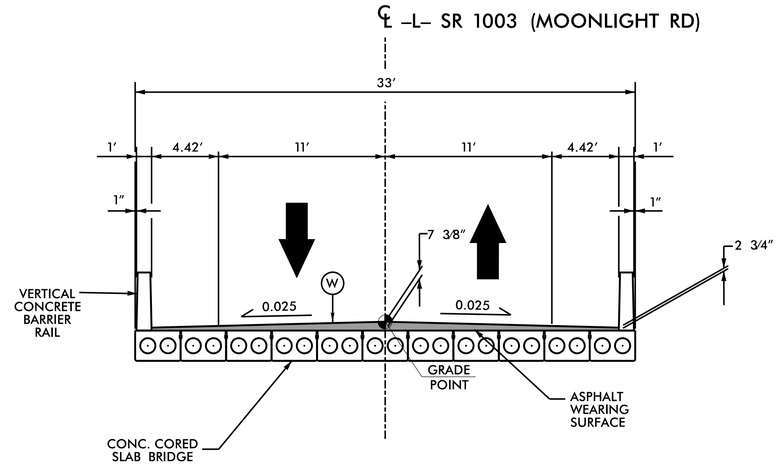

BRIDGE SKETCH NO. 1

BRIDGE #119

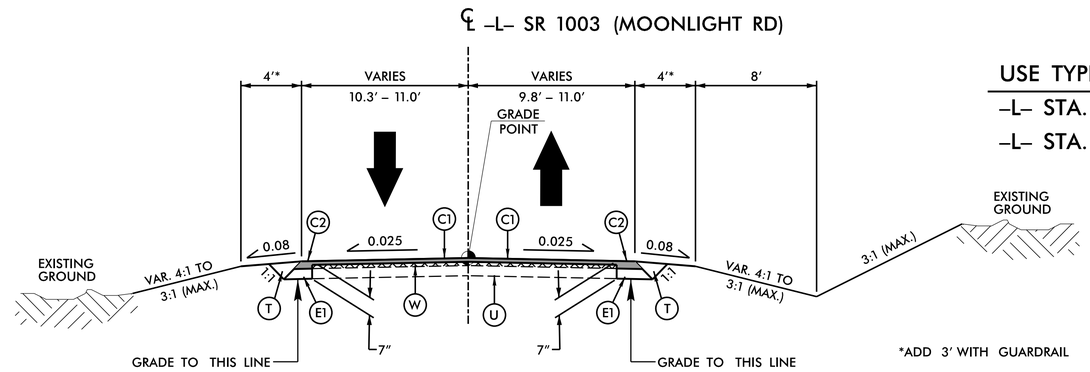

TYPICAL SECTION NO. 1

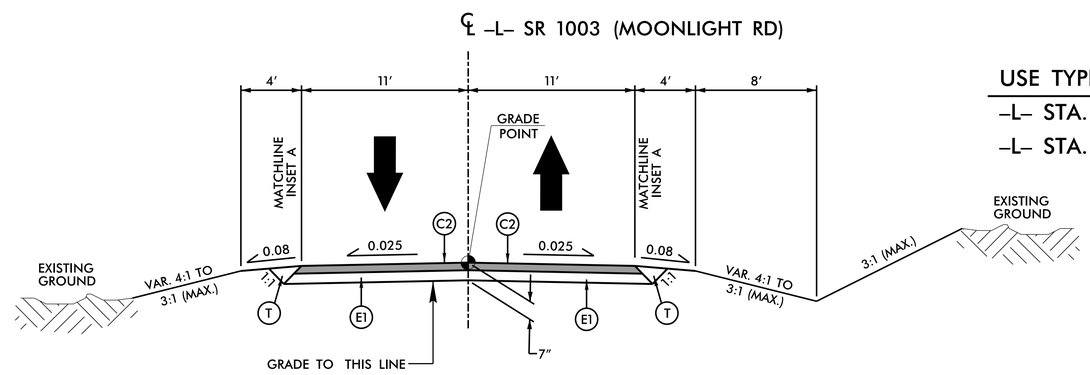

TYPICAL SECTION NO. 2

Prepared By:

ALPHA & OMEGA GROUP
CIVIL | STRUCTURAL | WATER RESOURCES
ALPHA AND OMEGA GROUP, PC
4601 LAKE BOONE TRAIL, SUITE 3C, RALEIGH, NC 27607
Firm License No. C-1684 www.aogroup.com

PROJECT REFERENCE NO.	SHEET NO.
BP4.R014	2A-1
R/W SHEET NO.	
ROADWAY DESIGN ENGINEER	HYDRAULICS ENGINEER

NORTH CAROLINA PROFESSIONAL SEAL 022982 ENGINEER MICHAEL A. YOUNG

DOCUMENT NOT CONSIDERED FINAL UNLESS ALL SIGNATURES COMPLETED

USE BRIDGE SKETCH NO. 1 AS FOLLOWS:
–L– STA 11+62.58 (BEGIN BRIDGE) TO
–L– STA. 12+72.82 (END BRIDGE)

USE TYPICAL SECTION NO. 1 AS FOLLOWS:
–L– STA. 8+12.50 TO –L– STA. 10+40.00
–L– STA. 13+95.00 TO –L– STA. 15+87.50

USE TYPICAL SECTION NO. 2 AS FOLLOWS:
–L– STA. 10+40.00 TO –L– STA. 11+62.58 (BEGIN BRIDGE)
–L– STA. 12+72.82 (END BRIDGE) TO –L– STA. 13+95.00

$$$$SYSTIME$$$$
$$$$FILENAME$$$$
$$$$DGN$$$$

PROJECT REFERENCE NO.	SHEET NO.
BP4.R014	2C-1

DOCUMENT NOT CONSIDERED FINAL UNLESS ALL SIGNATURES COMPLETED

STATE OF NORTH CAROLINA
DEPT. OF TRANSPORTATION
DIVISION OF HIGHWAYS
RALEIGH, N.C.

ROADWAY DETAIL DRAWING FOR
GUARDRAIL INSTALLATION

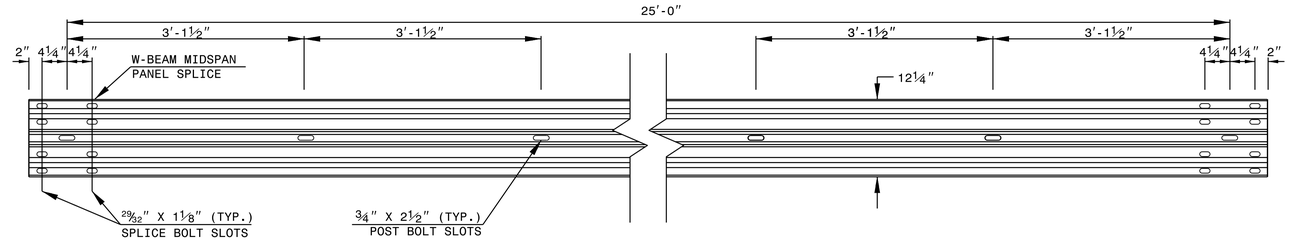

STANDARD W-BEAM GUARDRAIL

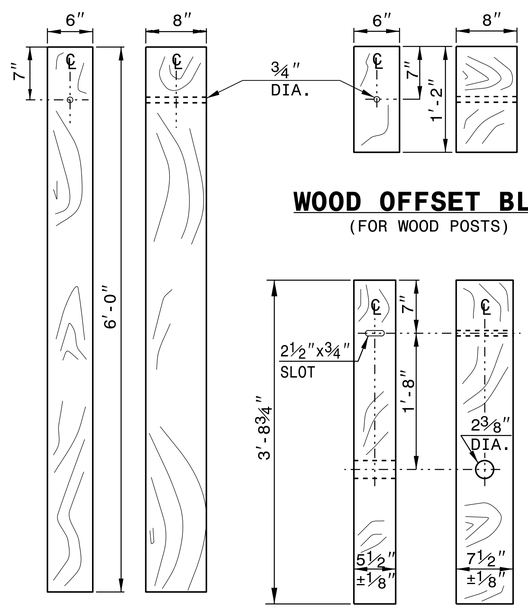

STANDARD LINE POST

WOOD OFFSET BLOCK
(FOR WOOD POSTS)

SHORT WOOD BREAKAWAY POST

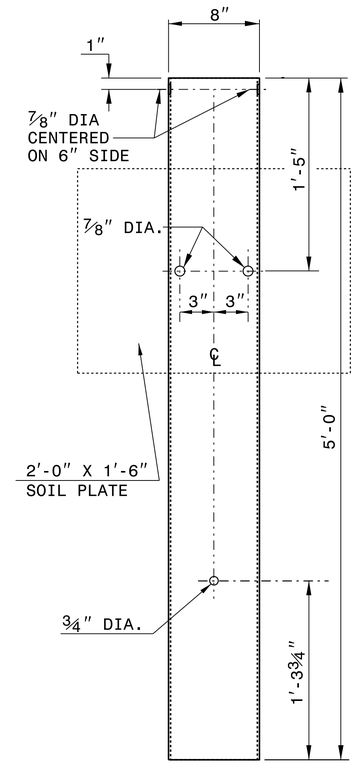

STEEL TUBE
TS 6"x8"x0.1875"

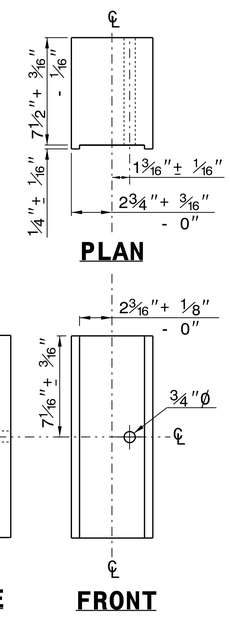

ROUTED OFFSET BLOCK

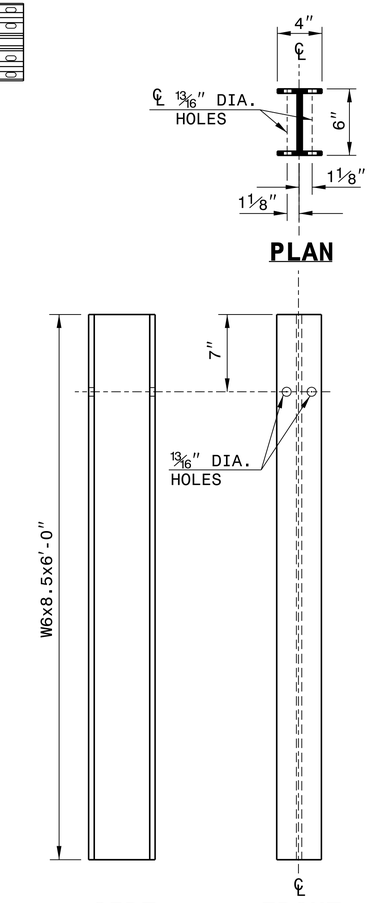

"W6" STEEL POST

SYSTEM PARTS

SHEET 6 OF 8
862D02

STATE OF NORTH CAROLINA
DEPT. OF TRANSPORTATION
DIVISION OF HIGHWAYS
RALEIGH, N.C.

ROADWAY DETAIL DRAWING FOR
GUARDRAIL INSTALLATION

SHEET 6 OF 8
862D02

NORTH CAROLINA PROFESSIONAL SEAL 022966 ENGINEER JOEL S. HOWERTON

CONTRACTS STANDARDS AND DEVELOPMENT UNIT
Office 919-707-6950 FAX 919-250-4119

SEE TITLE BLOCK

ORIGINAL BY: J.HOWERTON DATE: 3-7-2018
MODIFIED BY: DATE:
CHECKED BY: DATE:
FILE SPEC.:

STATE OF NORTH CAROLINA
DEPT. OF TRANSPORTATION
DIVISION OF HIGHWAYS
RALEIGH, N.C.

ROADWAY DETAIL DRAWING FOR
STRUCTURE ANCHOR UNITS
GUARDRAIL ANCHOR UNIT, TYPE III
FOR ATTACHMENT TO RAIL ON BRIDGE

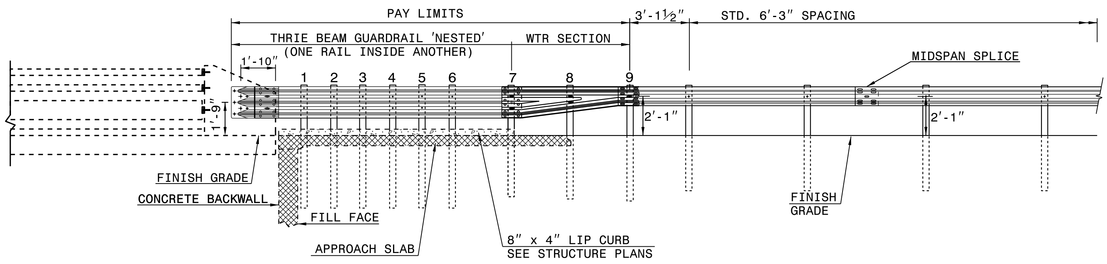

ELEVATION

NOTE:
**POST NOT REQUIRED FOR SKEW ANGLES GREATER THAN 150° OR LESS THAN 30° UNLESS OTHERWISE DIRECTED BY THE ENGINEER.
*THE DISTANCE FROM END OF BRIDGE RAIL TO CENTER LINE OF THE FIRST POST SHOULD BE 11½" IF CONCRETE BACKWALL IS NOT PRESENT.
-SHOULDER BERM GUTTER MUST BE INSTALLED TO THE LIMITS 8" x 4" LIP CURB IS SHOWN IF ANCHOR UNIT IS NOT ADJACENT TO AN APPROACH SLAB.
-MEASURE GUARDRAIL HEIGHT FROM THE TOP OF ADJACENT SURFACE (SHOULDER, BERM, OR GUTTER).
-LAP JOINTS IN THE DIRECTION OF TRAFFIC FLOW.
-SEE SHEET 3 FOR POST SECTIONS 1 THRU 9.

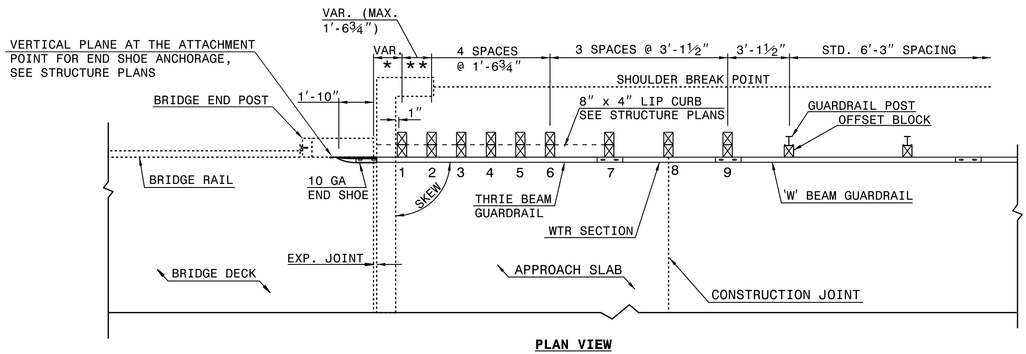

PLAN VIEW

GUARDRAIL ANCHOR UNIT, TYPE III FOR ATTACHMENT TO RAIL ON BRIDGE

SHEET 1 OF 7
862D03

STATE OF NORTH CAROLINA
DEPT. OF TRANSPORTATION
DIVISION OF HIGHWAYS
RALEIGH, N.C.

ROADWAY DETAIL DRAWING FOR
STRUCTURE ANCHOR UNITS
GUARDRAIL ANCHOR UNIT, TYPE III
FOR ATTACHMENT TO RAIL ON BRIDGE

SHEET 1 OF 7
862D03

STATE OF NORTH CAROLINA
DEPT. OF TRANSPORTATION
DIVISION OF HIGHWAYS
RALEIGH, N.C.

ROADWAY DETAIL DRAWING FOR
STRUCTURE ANCHOR UNITS
GUARDRAIL ANCHOR UNIT, TYPE III FOR ATTACHMENT TO
RAIL ON BRIDGE - SUB REGIONAL TIER

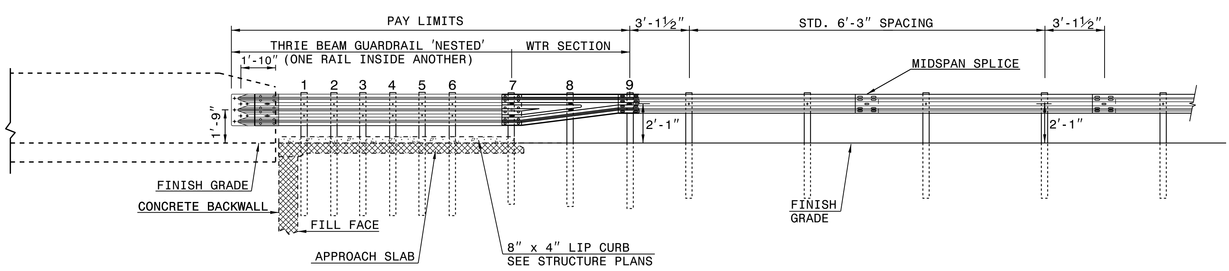

ELEVATION

NOTE:
**POST NOT REQUIRED FOR SKEW ANGLES GREATER THAN 150° OR LESS THAN 30° UNLESS OTHERWISE DIRECTED BY THE ENGINEER.
*THE DISTANCE FROM END OF BRIDGE RAIL TO CENTER LINE OF THE FIRST POST SHOULD BE 11½" IF CONCRETE BACKWALL IS NOT PRESENT.
-SHOULDER BERM GUTTER MUST BE INSTALLED TO THE LIMITS 8" x 4" LIP CURB IS SHOWN IF ANCHOR UNIT IS NOT ADJACENT TO AN APPROACH SLAB.
-MEASURE GUARDRAIL HEIGHT FROM THE TOP OF ADJACENT SURFACE (SHOULDER, BERM, OR GUTTER).
-LAP JOINTS IN THE DIRECTION OF TRAFFIC FLOW.
-SEE SHEET 3 FOR POST SECTIONS 1 THRU 9.

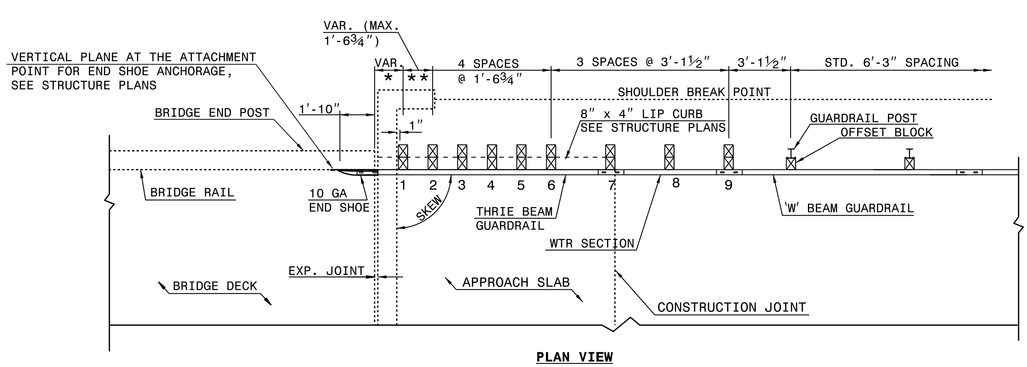

PLAN VIEW

GUARDRAIL ANCHOR UNIT, TYPE III FOR ATTACHMENT TO RAIL ON BRIDGE - SUB REGIONAL TIER

SHEET 2 OF 7
862D03

STATE OF NORTH CAROLINA
DEPT. OF TRANSPORTATION
DIVISION OF HIGHWAYS
RALEIGH, N.C.

ROADWAY DETAIL DRAWING FOR
STRUCTURE ANCHOR UNITS
GUARDRAIL ANCHOR UNIT, TYPE III FOR ATTACHMENT TO
RAIL ON BRIDGE - SUB REGIONAL TIER

SHEET 2 OF 7
862D03

SEE TITLE BLOCK

ORIGINAL BY: J. HOWERTON DATE: 06-22-12
MODIFIED BY: DATE:
CHECKED BY: DATE:
FILE SPEC.:

CONTRACT STANDARDS AND DEVELOPMENT UNIT
Office 919-707-6950 FAX 919-250-4119

DOCUMENT NOT CONSIDERED FINAL UNLESS ALL SIGNATURES COMPLETED

NORTH CAROLINA PROFESSIONAL ENGINEER SEAL 022966 JAMES S. HOWERTON

PROJECT REFERENCE NO. BP4.R014
SHEET NO. 2C-2

Prepared By:

ALPHA & OMEGA GROUP
CIVIL | STRUCTURAL | WATER RESOURCES
ALPHA AND OMEGA GROUP, PC
8601 LAKE BOONE TRAIL, SUITE 3C, RALEIGH, NC 27607
Firm License No. C-1684 www.aogroup.com

PROJECT REFERENCE NO.	SHEET NO.
BP4.R014	2D-1
R/W SHEET NO.	
ROADWAY DESIGN ENGINEER	HYDRAULICS ENGINEER

NORTH CAROLINA PROFESSIONAL SEAL 022982 ENGINEER MICHAEL A. YOUNG

DOCUMENT NOT CONSIDERED FINAL UNLESS ALL SIGNATURES COMPLETED

BRIDGE FLOODPLAIN EXCAVATION STABILIZATION DETAIL

PLAN VIEW

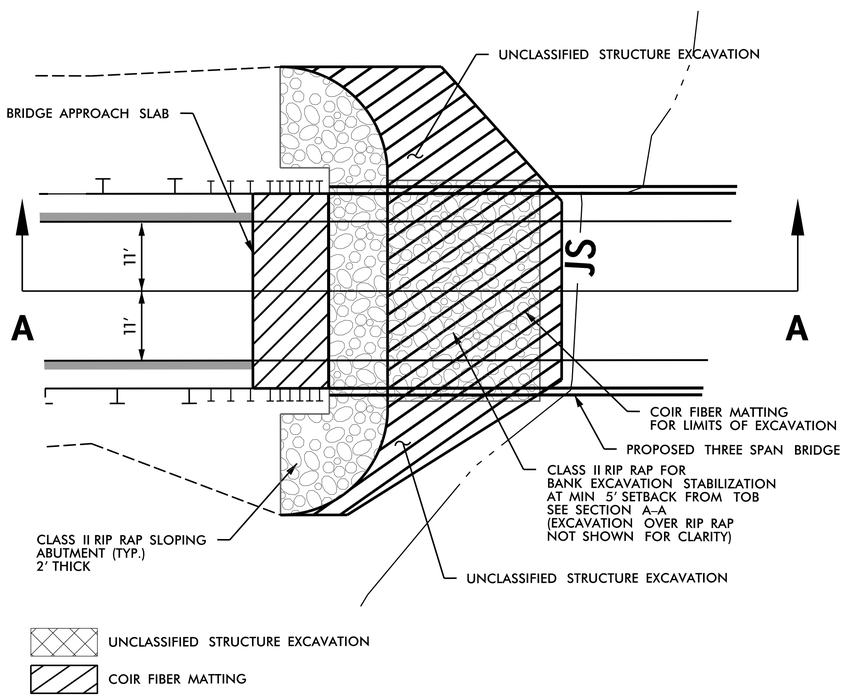

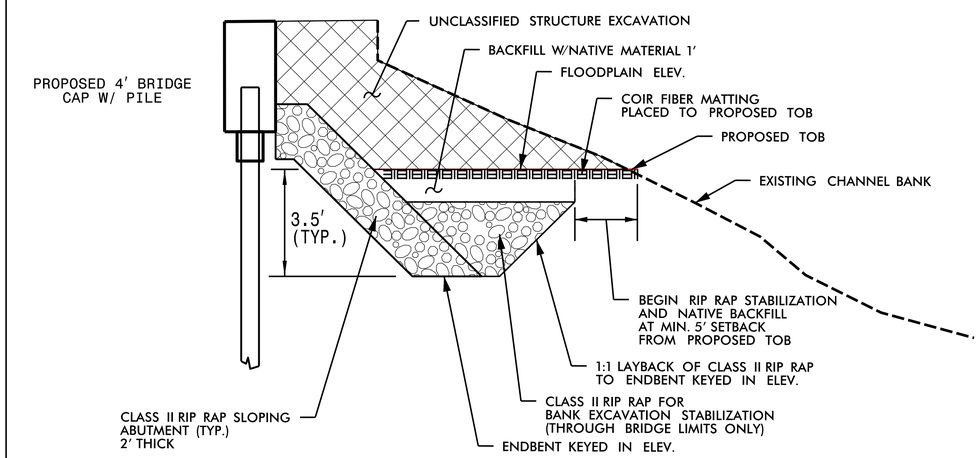

SECTION A-A

DETAIL NOTES:

1. FOR USE WHERE EXISTING ABUTMENTS AND BULKHEADS ARE TO BE COMPLETELY REMOVED
2. EXCAVATE TO FLOODPLAIN ELEVATION AS SPECIFIED ON PRELIMINARY GENERAL DRAWINGS
3. FLOODPLAIN STABILIZATION TO BEGIN WITH A 5' MINIMUM SETBACK FROM PROPOSED TOB
4. FOR ALL LOCATIONS OF CLASS II RIPRAP, FILL VOIDS WITH CLASS B RIP RAP
5. COIR FIBER MATTING TO BE INSTALLED OVER LIMITS OF FLOODPLAIN EXCAVATION AND AREAS BACKFILLED WITH NATIVE MATERIAL

REVISIONS

8/17/99

$$$$$SYSTIME$$$$
$$$$$$$$DGN$$$$$$$$$$$$$$$$
$$$$$USERNAME$$$$

PROJECT REFERENCE NO.	SHEET NO.
BP4.R014	2E-1

STATE OF
NORTH CAROLINA
DEPT. OF TRANSPORTATION
DIVISION OF HIGHWAYS
RALEIGH, N.C.

ENGLISH DETAIL DRAWING FOR
MODIFIED CONCRETE FLUME
WITH CONCRETE OR RIP-RAP DITCH

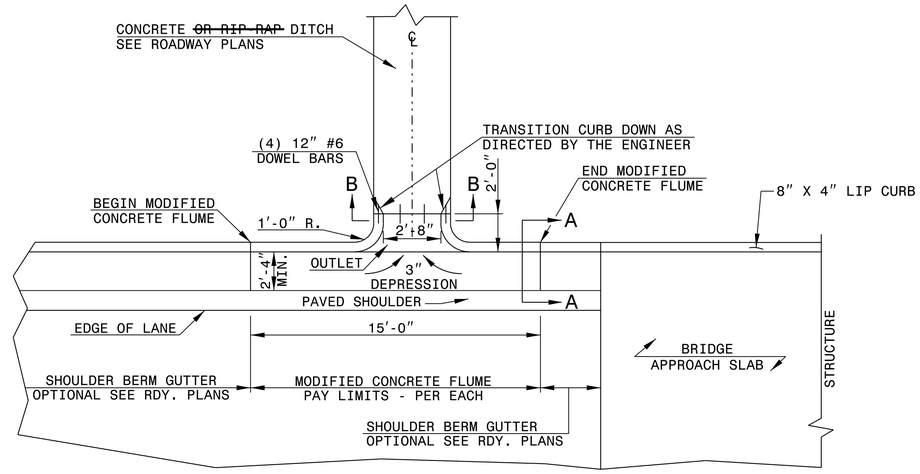

PLAN VIEW

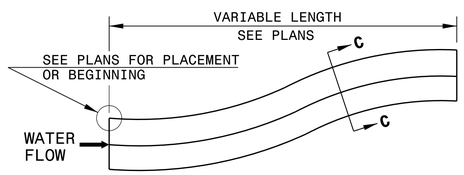

DOWNGRADE OR SAG

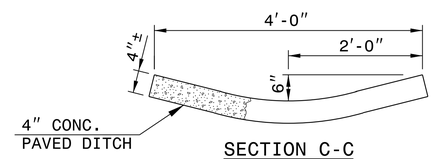

SECTION C-C

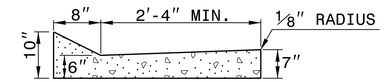

SECTION A-A

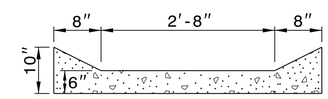

SECTION B-B

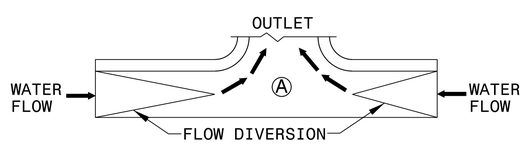

SAG

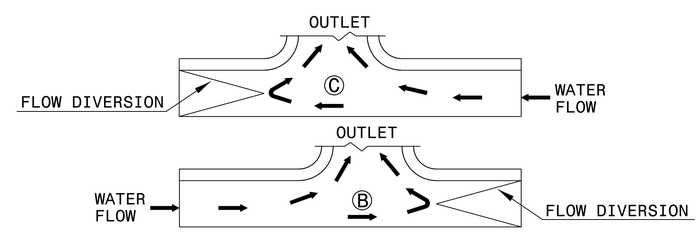

DOWN GRADE

FLOW DIVERSION EXAMPLES

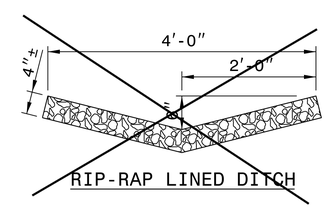

RIP-RAP LINED DITCH

NOTES:

- CONSTRUCT MODIFIED CONCRETE FLUME AND SHOULDER BERM GUTTER IN ACCORDANCE WITH THIS DETAIL.
- CONSTRUCT CONCRETE DITCH IN ACCORDANCE WITH STD. DWG. NO. 850.01.
- CONSTRUCT RIP RAP LINED DITCH IN ACCORDANCE WITH THIS DETAIL, IF CALLED FOR IN PLANS.
- CONCRETE OR RIP RAP LINED DITCH SHALL BE THE TYPE AND LENGTH SPECIFIED BY THE ROADWAY PLANS. THE DITCH SHALL TERMINATE AS SHOWN ON THE PLANS. IF NO TERMINATION IS INDICATED PLACE RIP-RAP AT THE END OF THE DITCH AS INDICATED BY STD. DWG. 876.02 FOR AN 18″ PIPE. TRANSITIONS FROM THE DITCH TO TERMINATION SHALL BE AS DIRECTED BY THE ENGINEER.
- MODIFICATIONS SHALL BE AS DICTATED BY SITE CONDITIONS AND DIRECTED BY THE ENGINEER.

SHEET 1 OF 1
MODFLMDTCH

STATE OF
NORTH CAROLINA
DEPT. OF TRANSPORTATION
DIVISION OF HIGHWAYS
RALEIGH, N.C.

ENGLISH DETAIL DRAWING FOR
MODIFIED CONCRETE FLUME
WITH CONCRETE OR RIP-RAP DITCH

SHEET 1 OF 1
MODFLMDTCH

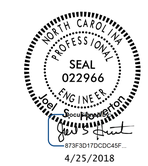

DOCUMENT NOT CONSIDERED FINAL
UNLESS ALL SIGNATURES COMPLETED

CONTRACT STANDARDS
AND DEVELOPMENT UNIT
Office 919-707-6950 FAX 919-250-4119

SEE PLATE FOR TITLE

ORIGINAL BY: E.E. Ward DATE: Apr. 2002
MODIFIED BY: J.S. Howerton DATE: October 2017
CHECKED BY: DATE:
FILE SPEC.: w:details\stand\modifiedflume.dgn

18-OCT-2017 14:17
S:\Contracts\Contracts\Special Details\ericward\usr\details\stand\modifiedflume.dgn
jhowerton AT CSD-242595

COMPUTED BY: MAY	DATE: 11/09/2021
CHECKED BY: CTS	DATE: 6/6/2022

STATE OF NORTH CAROLINA
DIVISION OF HIGHWAYS

PROJECT REFERENCE NO.	SHEET NO.
BP4.R014	3B-1

SHOULDER BERM GUTTER SUMMARY

SURVEY LINE	STATION	STATION	LENGTH
–L–	11+05.00	11+50.58	45.58
–L–	11+15.00	11+50.58	35.58
		TOTAL:	81.16
		SAY:	82.00

PAVEMENT REMOVAL SUMMARY

SURVEY LINE	STATION	STATION	LOCATION LT/RT/CL	YD^2
–L–	10+40.00	12+00+/–	CL	340.45
–L–	12+50+/–	13+95.00	CL	331.72
			TOTAL:	672.17
			SAY:	690.00

SUMMARY OF EARTHWORK

STATION	STATION	UNCL. EXCAV.	EMBANK. +%	BORROW	WASTE
8+50.00	11+62.58 (BRIDGE)	4	384	384	4
12+72.84 (BRIDGE)	15+50.00	15	281	281	15
SUBTOTALS:		19	665	665	19
PROJECT TOTALS:		19	665	665	19
EST. 5% TO REPLACE TOP SOIL ON BORROW PIT				33	
GRAND TOTALS:		19	665	698	19
SAY:		25		750	25

Note: Approximate quantities only. Unclassified Excavation, Borrow Excavation, Shoulder Borrow, Fine Grading, Clearing and Grubbing, Breaking of Existing Pavement, and Removal of Existing Pavement will be paid for at the contract lump sum price for "Grading."

NOTE: Invert Elevations are for Bid Purposes only and shall not be used for project construction stakeout.

See "Standard Specifications For Roads and Structures, Section 300–5".

LIST OF PIPES, ENDWALLS, ETC. (FOR PIPES 48" & UNDER)

STATION / SIZE / THICKNESS OR GAUGE	LOCATION (LT,RT, OR CL)	STRUCTURE NO. FROM	STRUCTURE NO. TO	TOP ELEVATION	INVERT ELEVATION	INVERT ELEVATION	SLOPE CRITICAL	DRAINAGE PIPE (RCP, CSP, CAAP, HDPE, or PVC) 12"	15"	18"	24"	30"	36"	42"	48"	C.S. PIPE (UNLESS NOTED OTHRWISE) 12" .064	15" .064	18" .064	24" .064	24"	30" .079	30"	36" .079	36"	42" .109	42"	48" .109	48"	CLASS III R.C. PIPE (UNLESS OTHERWISE NOTED) 12"	15"	18"	24"	30"	36"	42"	48"	15" SIDE DRAIN PIPE	18" SIDE DRAIN PIPE	24" SIDE DRAIN PIPE	ENDWALLS STD. 838.01, STD. 838.11 OR STD. 838.80 (UNLESS NOTED OTHERWISE) CU. YDS. R.C.P.	C.S.P.	QUANTITIES FOR DRAINAGE STRUCTURES PER EACH (0' THRU 5.0')	* TOTAL L.F. FOR PAY QUANTITY SHALL BE COL. 'A' + (1.3 X COL.'B') LIN. *FT. A 5.0' THRU 10.0'	B 10.0' AND ABOVE	C.B. STD. 840.01 OR STD. 840.02	FRAME, GRATES AND HOOD STANDARD 840.03 TYPE OF GRATE E	F	G		D.I. STD. 840.14 OR STD. 840.15	D.I. FRAME & GRATE STD. 840.16	G.D.I. TYPE "A" STD. 840.17 OR 840.26	G.D.I. TYPE "B" STD. 840.18 OR 840.27	G.D.I. TYPE "D" STD. 840.19 OR 840.28	G.D.I. FRAME WITH GRATE STD. 840.22	G.D.I. FRAME WITH TWO GRATES STD. 840.22	G.D.I. (N.S.) FRAME WITH GRATE STD. 840.24	G.D.I. (N.S.) FRAME WITH TWO GRATES STD. 840.24	J.B. STD. 840.31 OR 840.32	MODIFIED CONCRETE FLUME, SP						CORR. STEEL ELBOWS NO. & SIZE	CONC. COLLARS CL. "B" C.Y. STD 840.72	CONC. & BRICK PIPE PLUG, C.Y. STD. 840.71	PIPE REMOVAL LIN.FT.	REMARKS
–L– STA 11+12	14.42' RT	100																																																										1										
–L– STA 11+21	14.42' LT	101																																																										1										
TOTAL																																																												2										

ABBREVIATIONS

- C.B. — CATCH BASIN
- N.D.I. — NARROW DROP INLET
- D.I. — DROP INLET
- G.D.I. — GRATED DROP INLET
- G.D.I. (N.S.) — GRATED DROP INLET (NARROW SLOT)
- J.B. — JUNCTION BOX
- M.H. — MANHOLE
- T.B.D.I. — TRAFFIC BEARING DROP INLET
- T.B.J.B. — TRAFFIC BEARING JUNCTION BOX

"N" = DISTANCE FROM EDGE OF LANE TO FACE OF GUARDRAIL.
TOTAL SHOULDER WIDTH = DISTANCE FROM EDGE OF TRAVEL LANE TO SHOULDER BREAK POINT.
FLARE LENGTH = DISTANCE FROM LAST SECTION OF PARALLEL GUARDRAIL TO END OF GUARDRAIL.
W = TOTAL WIDTH OF FLARE FROM BEGINNING OF TAPER TO END OF GUARDRAIL.
G = GATING IMPACT ATTENUATOR TYPE 350
NG = NON–GATING IMPACT ATTENUATOR TYPE 350

GUARDRAIL SUMMARY

SURVEY LINE	BEG. STA.	END STA.	LOCATION	LENGTH STRAIGHT	LENGTH SHOP CURVED	LENGTH DOUBLE FACED	WARRANT POINT APPROACH END	WARRANT POINT TRAILING END	"N" DIST. FROM E.O.L.	TOTAL SHOUL. WIDTH	FLARE LENGTH APPROACH END	FLARE LENGTH TRAILING END	W APPROACH END	W TRAILING END	ANCHORS TYPE III	B–77	GREU TL–3	GREU TL–2	AT–1	CAT–1	TYPE III SC	B–77 SC		IMPACT ATTENUATOR TYPE 350 EA	G	NG	SINGLE FACED GUARDRAIL	REMOVE EXISTING GUARDRAIL	REMOVE AND STOCKPILE EXISTING GUARDRAIL	REMARKS
–L–	10+50.08	11+62.58 (BR)	RT	112.50'			11+62.58 (BR)		4.42'	7.42'	50'		1'		1		1													GR LENGTH INCREASED PER DRAINAGE DESIGN (SBG)
–L–	10+62.58	11+62.58 (BR)	LT	100.00'				11+62.58 (BR)	4.42'	7.42'		50'		1'	1		1													GR LENGTH INCREASED PER DRAINAGE DESIGN (SBG)
–L–	12+72.84 (BR)	13+72.84	LT	100.00'			12+72.84 (BR)		4.42'	7.42'	50'		1'		1		1													GR LENGTH INCREASED PER DRAIN. DESIGN (SLOPE PROTECTION)
–L–	12+72.84 (BR)	13+47.84	RT	75.00'				12+72.84 (BR)	4.42'	7.42'		50'		1'	1		1													
			SUBTOTAL	387.50'											4		4													
		DEDUCTIONS FOR ANCHOR UNITS																												
			GREU TL–3: 4 @ 50' EA.	–200.00'																										
			TYPE III: 4 @ 18.50' EA.	–75.00'																										
			TOTAL	112.50'																										
		ADDITIONAL GUARDRAIL POSTS = 5																												

12/06/07
$$$$$$SYSTIME$$$$$ $$$$$$$$DGN$$$$$$$$$$$$$$$$$$$$$ $$$$$USERNAME$$$$$

5/14/99

Prepared By:

ALPHA & OMEGA GROUP
CIVIL | STRUCTURAL | WATER RESOURCES
ALPHA AND OMEGA GROUP, PC
8601 LAKE BOONE TRAIL, SUITE 3C, RALEIGH, NC 27607
Firm License No. C-1684 www.aagroup.com

PROJECT REFERENCE NO.	SHEET NO.
BP4.R014	4
R/W SHEET NO.	

ROADWAY DESIGN ENGINEER: NORTH CAROLINA PROFESSIONAL SEAL 022982 ENGINEER MICHAEL A. YOUNG

HYDRAULICS ENGINEER: NORTH CAROLINA PROFESSIONAL SEAL 031746 ENGINEER WILLIAM S. NEEDHAM

DOCUMENT NOT CONSIDERED FINAL UNLESS ALL SIGNATURES COMPLETED

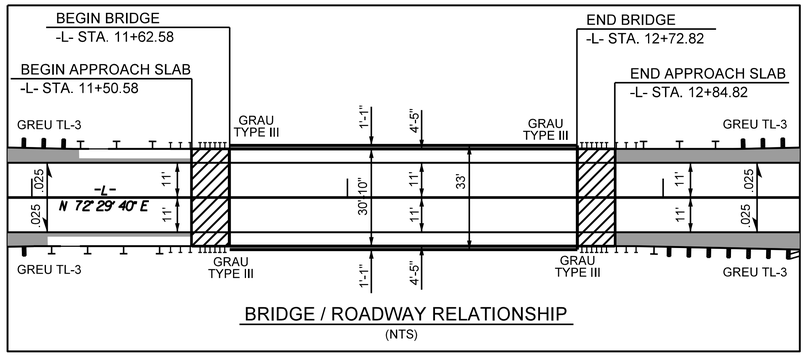

CONTRACTOR SHALL REMOVE OLD PILES IN WATERWAY.

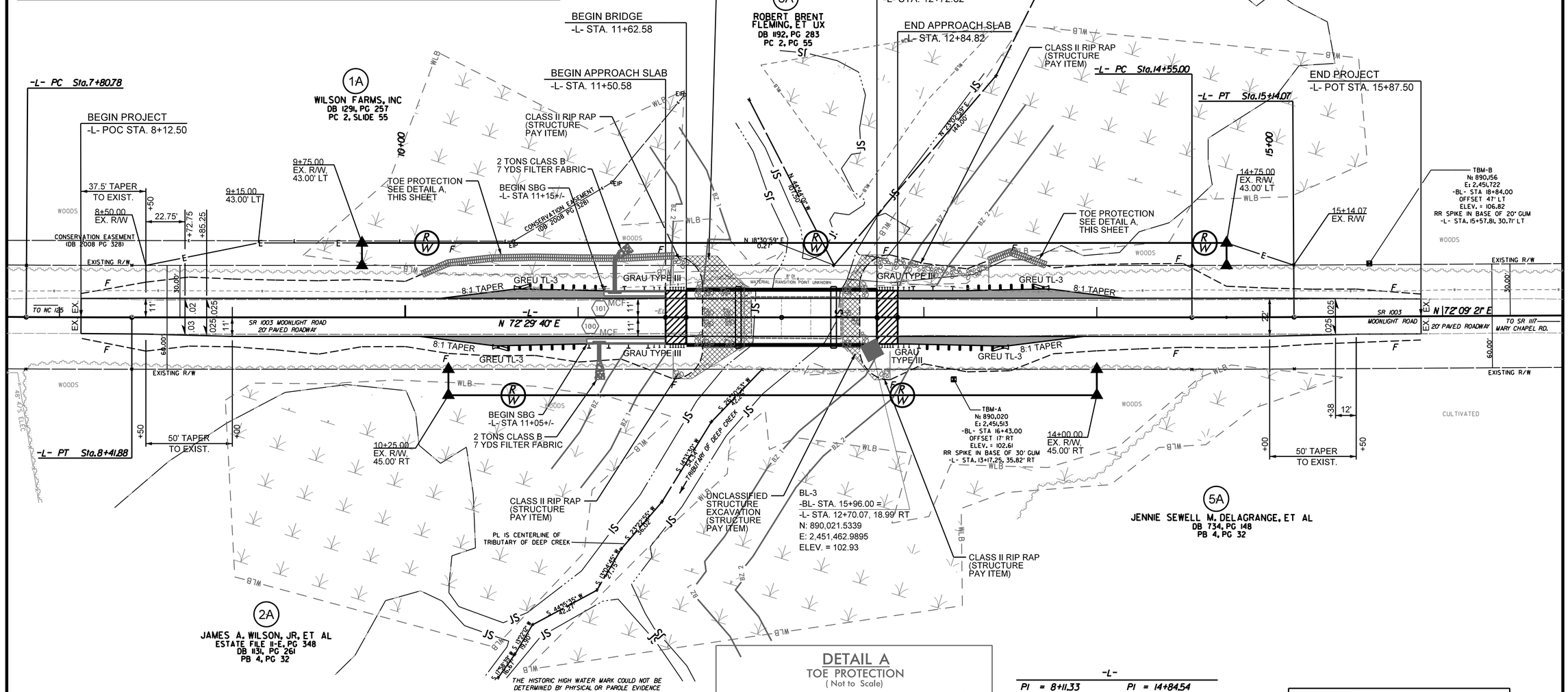

RIGHT OF WAY AREA DATA

PARCEL NO.	PROPERTY OWNERS NAMES	TOTAL ACREAGE	AREA TAKEN	AREA REMAINING RT.	AREA REMAINING LT.	CONST. EASE.	PERM. UTILITY EASE.	TEMP. DRAIN. EASE.
1A	WILSON FARMS, INC.		3,478 SF			1,176 SF		
2A	JAMES A. WILSON, JR., ET AL		2,614 SF					
3A	ROBERT BRENT FLEMING, ET UX		112 SF					
4A	WALTER D. AND KELSEY C. WILSON		2,858 SF			252 SF		
5A	JENNIE SEWELL M. DELAGRANGE, ET AL		3,012 SF					

DETAIL A
TOE PROTECTION
(Not to Scale)

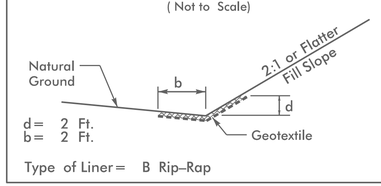

d= 2 Ft.
b= 2 Ft.

Type of Liner= B Rip-Rap

FROM STA. 10+10+/- TO STA. 11+50+/- LT
FROM STA. 13+37+/- TO STA. 13+70+/- LT

-L-

PI = 8+11.33	PI = 14+84.54
Δ = 0° 21' 00" (LT)	Δ = 0° 20' 18" (LT)
D = 0° 34' 23"	D = 0° 34' 23"
L = 611.0	L = 59.07
T = 305.55	T = 29.54
R = 10,000.00	R = 10,000.00
SE = NC	SE = NC
DS = 60 mph	DS = 60 mph

PROP PAVED SHOULDER
BRIDGE APPROACH SLAB
MATERIAL TO BE REMOVED

FOR -L- PROFILE, SEE SHEET NO. 5
FOR STRUCTURE PLANS, SEE SHEET S-1 THRU S-26

$$$$SYSTIME$$$$
$$$$DGN$$$$

PROJECT REFERENCE NO.	SHEET NO.
BP4.R014	5

ROADWAY DESIGN ENGINEER — SEAL 022982, NORTH CAROLINA PROFESSIONAL ENGINEER, MICHAEL A. YOUNG

HYDRAULICS ENGINEER — SEAL 031746, NORTH CAROLINA PROFESSIONAL ENGINEER, WILLIAM S. NEEDHAM

DOCUMENT NOT CONSIDERED FINAL UNLESS ALL SIGNATURES COMPLETED

Prepared By: ALPHA & OMEGA GROUP
CIVIL | STRUCTURAL | WATER RESOURCES
Founded 1998
ALPHA AND OMEGA GROUP, PC
4601 LAKE BOONE TRAIL, SUITE 3C, RALEIGH, NC 27607
Firm License No. C-1684 www.aogroup.com

TBM-A
ELEV.= 102.61
RR SPIKE IN BASE OF 30" GUM
-L- STA.13+17.25, 35.82' RT =
-BL- STA.16+43.00, 17' RT.

TBM-B
ELEV.= 106.82
RR SPIKE IN BASE OF 20" GUM
-L- STA.15+57.81, 30.71' LT =
-BL- STA.18+84.00, 47' LT

-L-

FOR PLAN, SEE SHEET 4.

CONTRACTOR SHALL REMOVE OLD PILES IN WATERWAY.

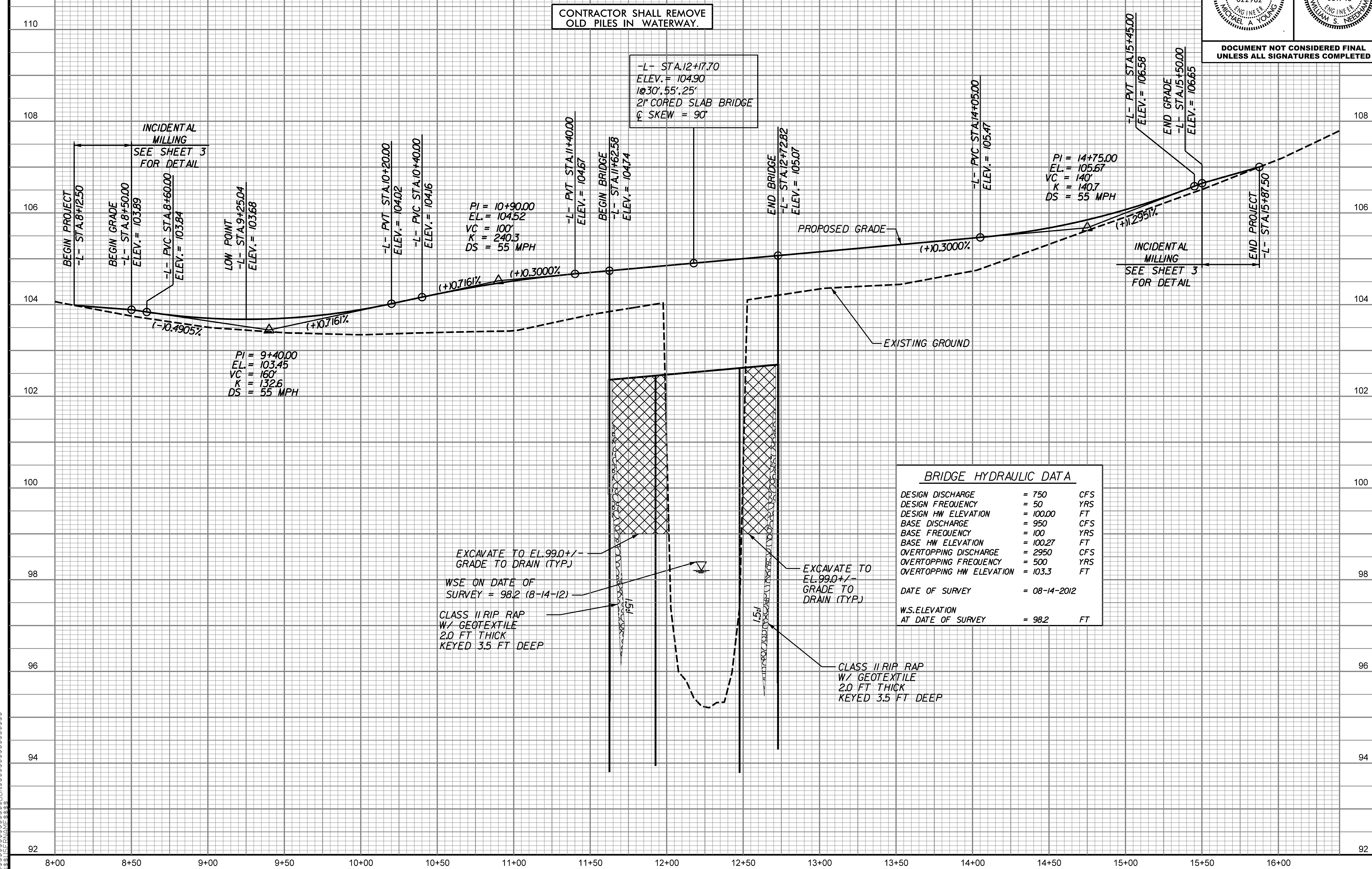

BRIDGE HYDRAULIC DATA

DESIGN DISCHARGE	= 750	CFS
DESIGN FREQUENCY	= 50	YRS
DESIGN HW ELEVATION	= 100.00	FT
BASE DISCHARGE	= 950	CFS
BASE FREQUENCY	= 100	YRS
BASE HW ELEVATION	= 100.27	FT
OVERTOPPING DISCHARGE	= 2950	CFS
OVERTOPPING FREQUENCY	= 500	YRS
OVERTOPPING HW ELEVATION	= 103.3	FT
DATE OF SURVEY	= 08-14-2012	
W.S.ELEVATION AT DATE OF SURVEY	= 98.2	FT

5/14/99
$$$$$$SYSTIME$$$$$
$$$$$$USERNAME$$$$$
$$$$$$$$$$$$$$$$$DGN$$$$$$$$$$$$$$$$$$$$$

STATE OF NORTH CAROLINA
DIVISION OF HIGHWAYS

TRANSPORTATION MANAGEMENT PLAN

HALIFAX COUNTY

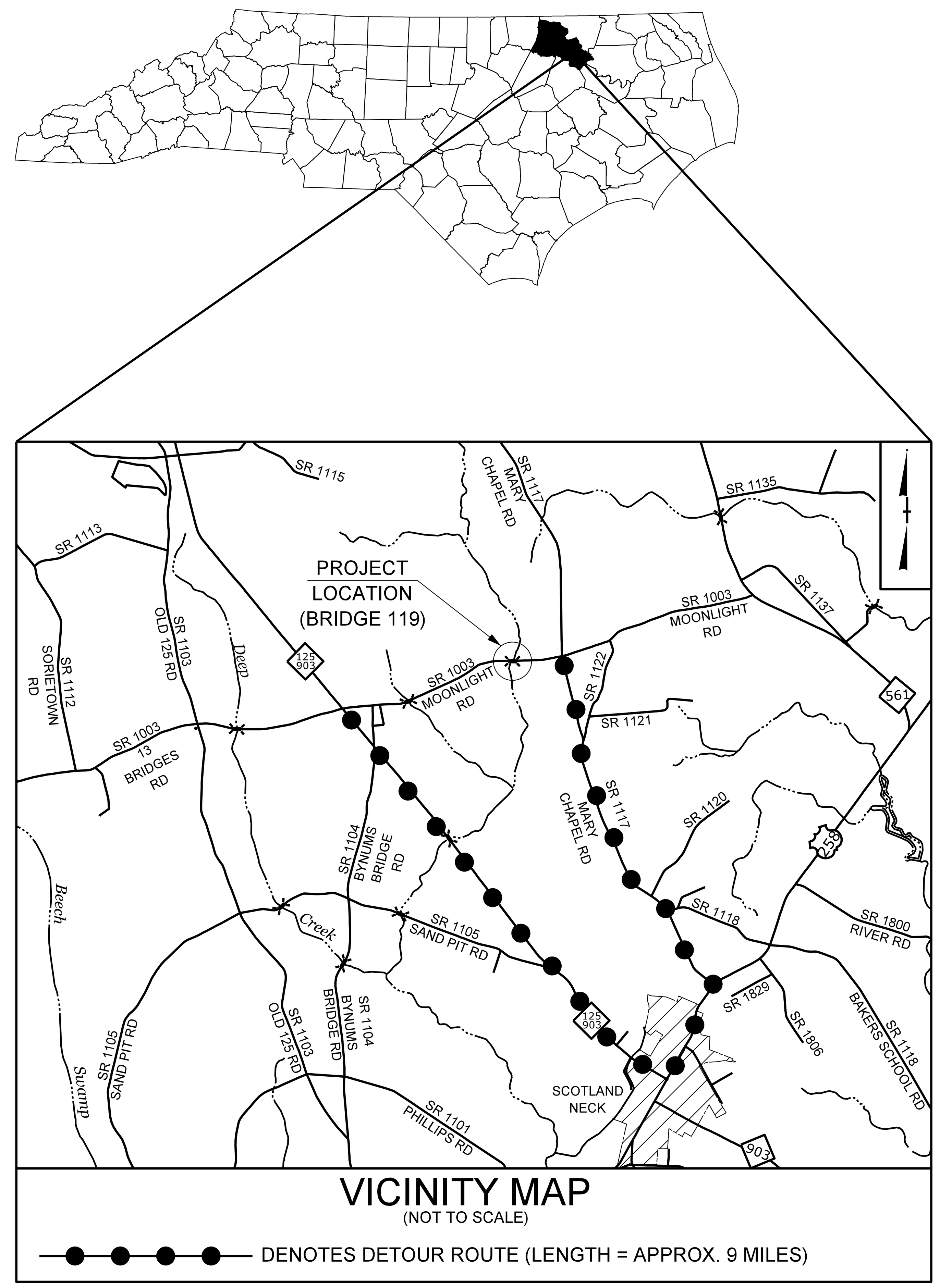

REPLACE BRIDGE NO. 119 TRIB. OF DEEP CREEK
ON SR 1003 (MOONLIGHT ROAD)
GRADING, DRAINAGE, PAVING, AND STRUCTURE

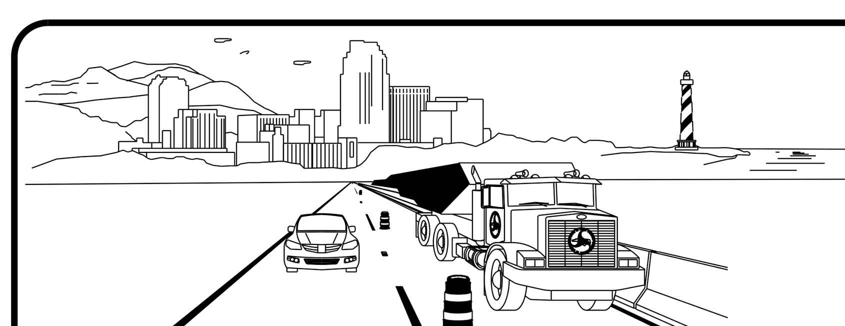

WORK ZONE SAFETY & MOBILITY
"from the MOUNTAINS to the COAST"

PLANS PREPARED BY:

T. GLENN ZEBLO, PE
PROJECT ENGINEER

MICHAEL A. YOUNG, PE
PROJECT DESIGN ENGINEER

NCDOT CONTACTS:

RUSSELL E. BROADWELL, PE
PROJECT MANAGER

DIVISION OF HIGHWAYS – STATE OF NORTH CAROLINA – DEPARTMENT OF TRANSPORTATION – WORK ZONE TRAFFIC CONTROL

INDEX OF SHEETS

SHEET NO.	TITLE
TMP-1	TITLE SHEET, VICINITY MAP, INDEX OF SHEETS, LIST OF APPLICABLE ROADWAY STANDARD DRAWINGS, AND LEGEND
TMP-2	TEMPORARY TRAFFIC CONTROL PHASING, GENERAL NOTES
TMP-3	DETOUR DETAIL
TMP-4	SPECIAL SIGN DESIGN "MOONLIGHT ROAD"
PMP-1	PAVEMENT MARKING PLAN

ROADWAY STANDARD DRAWINGS

THE FOLLOWING ROADWAY STANDARDS AS SHOWN IN "ROADWAY STANDARD DRAWINGS" CONTRACT STANDARDS AND DEVELOPMENT UNIT - N.C. DEPARTMENT OF TRANSPORTATION - RALEIGH, N.C., DATED JAN 2018 ARE APPLICABLE TO THIS PROJECT AND BY REFERENCE HEREBY ARE CONSIDERED A PART OF THESE PLANS:

STD. NO.	TITLE
1101.03	TEMPORARY ROAD CLOASURES
1101.11	TRAFFIC CONTROL DESIGN TABLES
1110.01	STATIONARY WORK ZONE SIGNS
1145.01	BARRICADES
1205.01	PAVEMENT MARKINGS - LINE TYPES & OFFSETS
1205.02	PAVEMENT MARKINGS - 2 LANE & MULTILANE ROADWAYS
1205.12	PAVEMENT MARKINGS - BRIDGES
1262.01	GUARDRAIL END DELINEATION

LEGEND

BARRICADE
DETOUR ROUTE
STATIONARY SIGN

DOCUMENT NOT CONSIDERED FINAL UNLESS ALL SIGNATURES COMPLETED

Founded 1998
ALPHA & OMEGA GROUP
CIVIL | STRUCTURAL | WATER RESOURCES
ALPHA AND OMEGA GROUP, PC
4601 LAKE BOONE TRAIL, SUITE 3C, RALEIGH, NC 27607
Firm License No. C-1684 www.aogroup.com

APPROVED:__________
DATE:__________
SEAL

NORTH CAROLINA PROFESSIONAL SEAL 022982 ENGINEER MICHAEL A. YOUNG

SHEET NO.
TMP-1

TIP PROJECT: BP4.R014

$$$$SYSTIME$$$$
$$$$$$$$$$$$$$DGN$$$$$$$$$$$$$$
$$$$USERNAME$$$$

GENERAL NOTES

CHANGES MAY BE REQUIRED WHEN PHYSICAL DIMENSIONS IN THE DETAIL DRAWINGS, STANDARD DETAILS, AND ROADWAY DETAILS ARE NOT ATTAINABLE TO MEET FIELD CONDITIONS OR RESULT IN DUPLICATE OR UNDESIRED OVERLAPPING OF DEVICES. MODIFICATIONS MAY INCLUDE: MOVING, SUPPLEMENTING, COVERING OR REMOVAL OF DEVICES AS DIRECTED BY THE ENGINEER.

THE FOLLOWING GENERAL NOTES APPLY AT ALL TIMES FOR THE DURATION OF THE CONSTRUCTION PROJECT EXCEPT WHEN OTHERWISE NOTED IN THE PLAN OR DIRECTED BY THE ENGINEER.

TRAFFIC PATTERN ALTERATION

A) NOTIFY THE ENGINEER THIRTY (30) CALENDAR DAYS PRIOR TO ANY TRAFFIC PATTERN ALTERATION.

SIGNING

B) PROVIDE SIGNING AND DEVICES REQUIRED TO CLOSE THE ROAD ACCORDING TO THE ROADWAY STANDARD DRAWINGS AND TRAFFIC CONTROL PLANS.

PROVIDE SIGNING REQUIRED FOR THE OFF-SITE DETOUR ROUTE AS SHOWN ON SHEET TMP-3.

C) COVER OR REMOVE ALL SIGNS AND DEVICES REQUIRED TO CLOSE THE ROAD WHEN THE ROAD CLOSURE IS NOT IN OPERATION.

COVER OR REMOVE ALL SIGNS REQUIRED FOR THE OFF-SITE DETOUR WHEN THE DETOUR IS NOT IN OPERATION.

D) ENSURE ALL NECESSARY SIGNING AND DEVICES ARE IN PLACE PRIOR TO ALTERING ANY TRAFFIC PATTERN.

TRAFFIC CONTROL DEVICES

E) PLACE TYPE III BARRICADES, WITH "ROAD CLOSED" SIGN R11-2 ATTACHED, OF SUFFICIENT LENGTH TO CLOSE ENTIRE ROADWAY.

PAVEMENT MARKINGS AND MARKERS

F) INSTALL PAVEMENT MARKINGS ON THE FINAL SURFACE AS FOLLOWS:

ROAD NAME	MARKING
SR 1003 (MOONLIGHT RD)	HOT SPRAY THERMOPLASTIC (SEE SPECIAL PROVISIONS)

G) TIE PROPOSED PAVEMENT MARKING LINES TO EXISTING PAVEMENT MARKING LINES.

H) REMOVE/REPLACE AND CONFLICTING/DAMAGED PAVEMENT MARKINGS.

PHASING

THE TERM RSD REFERS TO ROADWAY STANDARD DRAWINGS.

PHASE I

PRIOR TO ANY CONSTRUCTION OPERATIONS, INSTALL ADVANCE WARNING SIGNS ACCORDING TO RSD 1101.02 (SHEET 3 OF 3) AND PLACE AND COVER OFF-SITE DETOUR SIGNS AS SHOWN AND IN ACCORDANCE WITH RSD 1101.03 (SHEET 1 OF 9).

PHASE II

USING OFF-SITE DETOUR, UNCOVER DETOUR SIGNS, CLOSE -L- (SR 1003 / MOONLIGHT RD.) TO TRAFFIC AND CONSTRUCT BRIDGE, APPROACHES AND ROADWAY UP TO AND INCLUDING THE FINAL LAYER OF SURFACE COURSE.

PHASE III

UNPON COMPLETION OF BRIDGE, APPROACHES AND ROADWAY, PLACE FINAL PAVEMENT MARKINGS IN ACCORDANCE WITH RSD 1205.01, 1205.02 AND 1205.12. REMOVE BARRICADES AND DETOUR SIGNS AND OPEN -L- (SR 1003 / MOONLIGHT RD.) TO TRAFFIC.

Founded 1998
ALPHA & OMEGA GROUP
CIVIL | STRUCTURAL | WATER RESOURCES
ALPHA AND OMEGA GROUP, PC
4601 LAKE BOONE TRAIL, SUITE 3C, RALEIGH, NC 27607
Firm License No. C-1684 www.aogroup.com

APPROVED: ____
DATE: ____
SEAL
NORTH CAROLINA PROFESSIONAL SEAL 022982 ENGINEER MICHAEL A. YOUNG

DOCUMENT NOT CONSIDERED FINAL UNLESS ALL SIGNATURES COMPLETED

DIVISION OF HIGHWAYS · STATE OF NORTH CAROLINA · DEPARTMENT OF TRANSPORTATION · WORK ZONE TRAFFIC CONTROL

TRANSPORTATION MANAGEMENT PLAN

GENERAL NOTES AND PHASING

$$$$$SYSTIME$$$$$
$$$$$$$$$$$$DGN$$$$$$$$$$$$$$$$$$$$$
$$$$USERNAME$$$$

PROJ. REFERENCE NO.	SHEET NO.
BP4.R014	TMP-3

★ SEE SHEET TMP-4 FOR SPECIAL SIGN DESIGN

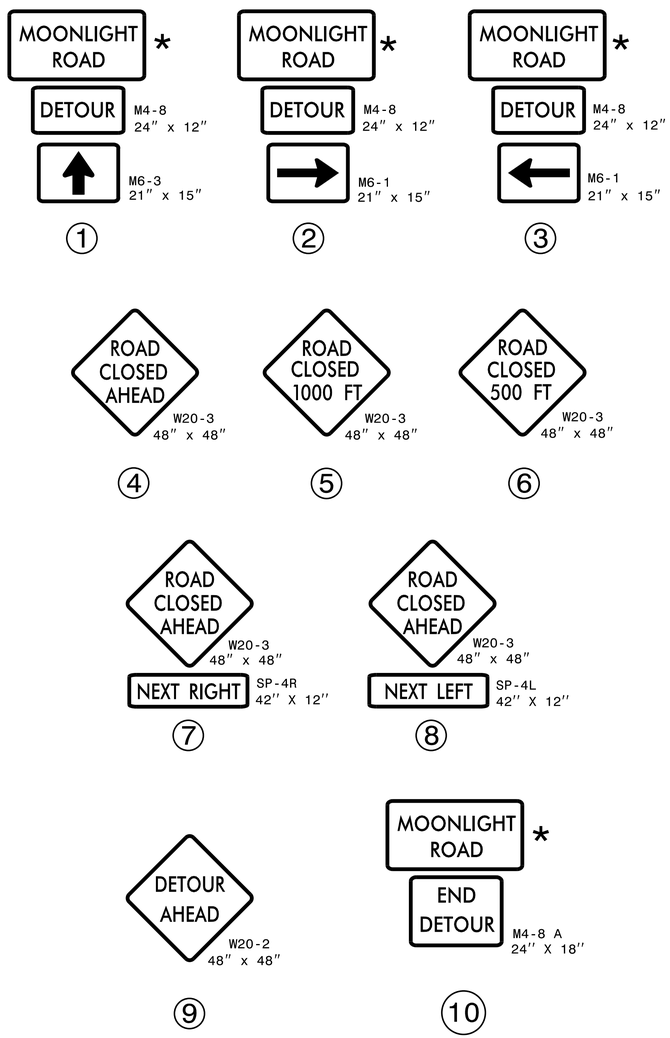

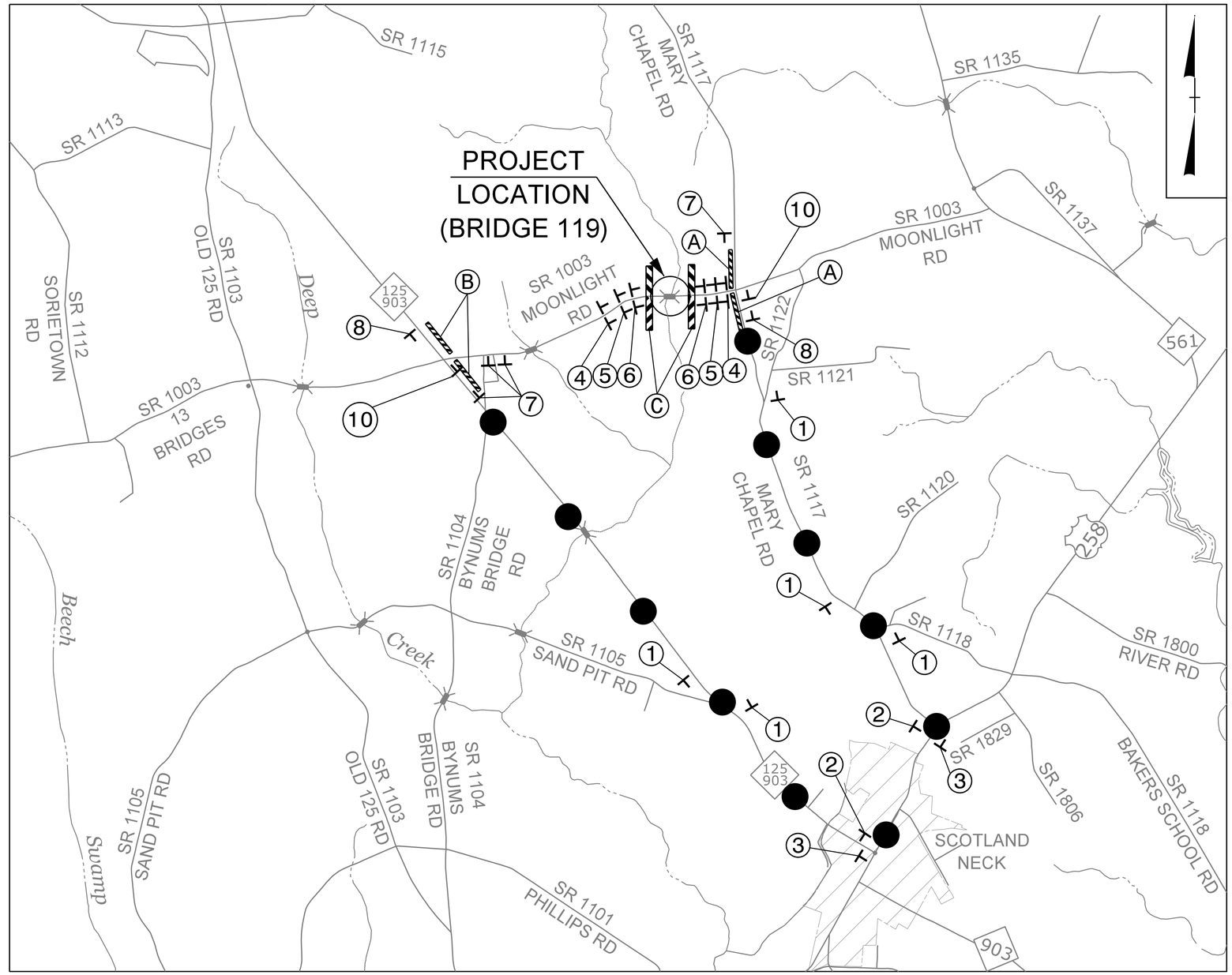

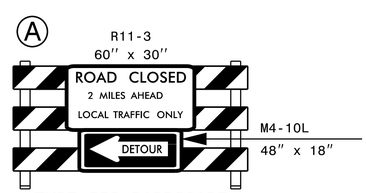

TYPE III BARRICADE

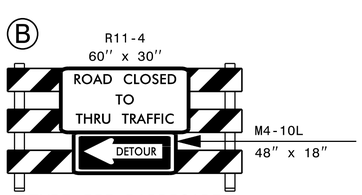

TYPE III BARRICADE

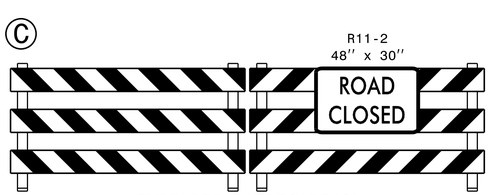

TYPE III BARRICADE(S)

Founded 1998

ALPHA & OMEGA GROUP

CIVIL | STRUCTURAL | WATER RESOURCES

ALPHA AND OMEGA GROUP, PC
4601 LAKE BOONE TRAIL, SUITE 3C, RALEIGH, NC 27607

Firm License No. C-1684 *www.aogroup.com*

APPROVED: _____

DATE: _____

SEAL

NORTH CAROLINA PROFESSIONAL SEAL 022982 ENGINEER MICHAEL A. YOUNG

DOCUMENT NOT CONSIDERED FINAL UNLESS ALL SIGNATURES COMPLETED

DIVISION OF HIGHWAYS · STATE OF NORTH CAROLINA · DEPARTMENT OF TRANSPORTATION · WORK ZONE TRAFFIC CONTROL

TRANSPORTATION MANAGEMENT PLAN

DETOUR DETAIL

$$$$$$$SYSTIME$$$$$
$$$$$$$$$$$$$$$$$$$$DGN$$$$$$$$$$$$$$$$$$
$$$$$$$$$$$$$$$$$$$$USERNAME$$$$

PROJ. REFERENCE NO.	SHEET NO.
BP4.R014	TMP-4

SIGN NUMBER: SD-1
TYPE: STATIONARY
QUANTITY: SEE PLANS

SIGN WIDTH: 3'-9"
HEIGHT: 2'-0"
TOTAL AREA: 7.5 Sq.Ft.

BORDER TYPE: INSET
RECESS: 0.47"
WIDTH: 0.5"
RADII: 1.5"

NO. Z BARS:
LENGTH:

BACKG COLOR: Fluorescent Orange
COPY COLOR: Black

SYMBOL	X	Y	WID	HT

MAT'L: 0.080" (2.0 mm) ALUMINUM

DESIGN BY: XXX
PROJECT ID: BP4.R014

CHECKED BY: MAY
LOCATION:

Apr 13, 2022
DIV: 4

USE NOTES: 1,2

1. Legend and border shall be direct applied black non-reflective sheeting.
2. Background shall be NC GRADE B fluorescent orange retroreflective sheeting.

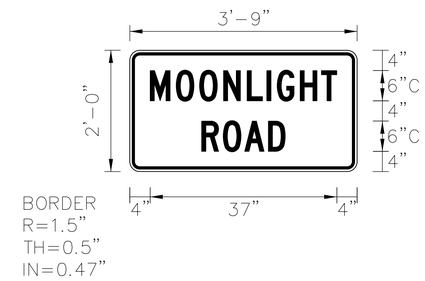

Spacing Factor is 1 unless specified otherwise

LETTER POSITIONS

Letter spacings are to start of next letter

																										Series/Size Text Length
		M	O	O	N	L	I	G	H	T																C 2000
	4	5.2	4.6	4.7	4.7	3.9	2	4.6	4.2	3.1	4															37
		R	O	A	D																					C 2000
	14.2	4.3	4.3	4.7	3.4	14.2																				16.6

FILENAME: BP4.R014_Guidsign

NORTH CAROLINA D.O.T. SIGN DETAIL

$$$$SYSTIME$$$$
$$$$USERNAME$$$ $$$$DGN$$$$

Founded 1998
ALPHA & OMEGA GROUP
CIVIL | STRUCTURAL | WATER RESOURCES

ALPHA AND OMEGA GROUP, PC
4601 LAKE BOONE TRAIL, SUITE 3C, RALEIGH, NC 27607
Firm License No. C-1684 www.aogroup.com

APPROVED: _____
DATE: _____
SEAL

NORTH CAROLINA PROFESSIONAL SEAL 022982 ENGINEER MICHAEL A. YOUNG

DOCUMENT NOT CONSIDERED FINAL UNLESS ALL SIGNATURES COMPLETED

DIVISION OF HIGHWAYS · STATE OF NORTH CAROLINA · DEPARTMENT OF TRANSPORTATION · WORK ZONE TRAFFIC CONTROL

TRANSPORTATION MANAGEMENT PLAN

SPECIAL SIGN DESIGN

PROJ. REFERENCE NO.	SHEET NO.
BP4.R014	PMP-1

FINAL PAVEMENT MARKING SCHEDULE

SYMBOL	DESCRIPTION	QUANTITY
	PAVEMENT MARKINGS	
	HOT SPRAY THERMOPLASTIC (4", 50 MILS)	
T1	WHITE EDGELINE	1,550 FT
T12	10 FT. YELLOW SKIP	200 FT

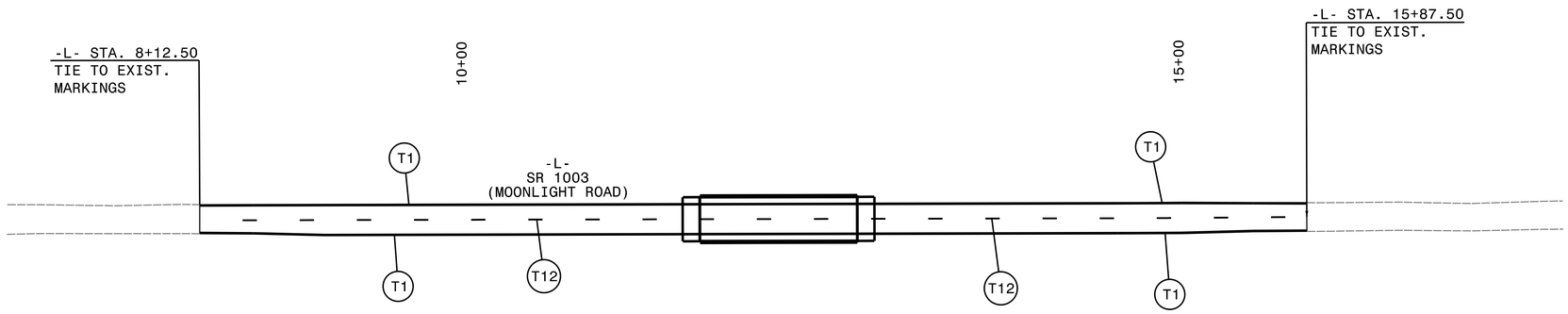

$$$$$SYSTIME$$$$
$$$$$$DGN$$$$$$$$$$$$$$$$$$$$
$$$$$USERNAME$$$$

Founded 1998

ALPHA & OMEGA GROUP
CIVIL | STRUCTURAL | WATER RESOURCES

ALPHA AND OMEGA GROUP, PC
4601 LAKE BOONE TRAIL, SUITE 3C, RALEIGH, NC 27607

Firm License No. C-1684 www.aogroup.com

APPROVED: _____

DATE: _____

SEAL

NORTH CAROLINA PROFESSIONAL SEAL 022982 ENGINEER MICHAEL A. YOUNG

DOCUMENT NOT CONSIDERED FINAL UNLESS ALL SIGNATURES COMPLETED

DIVISION OF HIGHWAYS
STATE OF NORTH CAROLINA
DEPARTMENT OF TRANSPORTATION
WORK ZONE TRAFFIC CONTROL

TRANSPORTATION MANAGEMENT PLAN

PAVEMENT MARKING PLAN

TIP PROJECT: BP4.R014

STATE	STATE PROJECT REFERENCE NO.	SHEET NO.	TOTAL SHEETS
N.C.	BP4.R014.1	EC-1	

STATE PROJ. NO.	F.A. PROJ. NO.	DESCRIPTION
BP4.R014.1		PE
BP4.R014.2		R/W & UTILITIES
BP4.R014.3		CONSTRUCTION

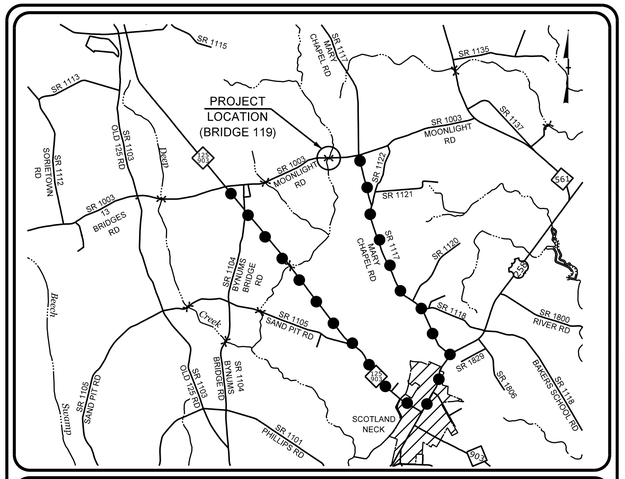

VICINITY MAP

NOT TO SCALE

DENOTES DETOUR ROUTE (LENGTH = APPROX. 9 MILES)

STATE OF NORTH CAROLINA
DIVISION OF HIGHWAYS

PLAN FOR PROPOSED HIGHWAY EROSION CONTROL

HALIFAX COUNTY

LOCATION: REPLACE BRIDGE NO 119 ON SR 1003 (MOONLIGHT ROAD) OVER TRIBUTARY OF DEEP CREEK

TYPE OF WORK: GRADING, DRAINAGE, PAVING, AND STRUCTURE

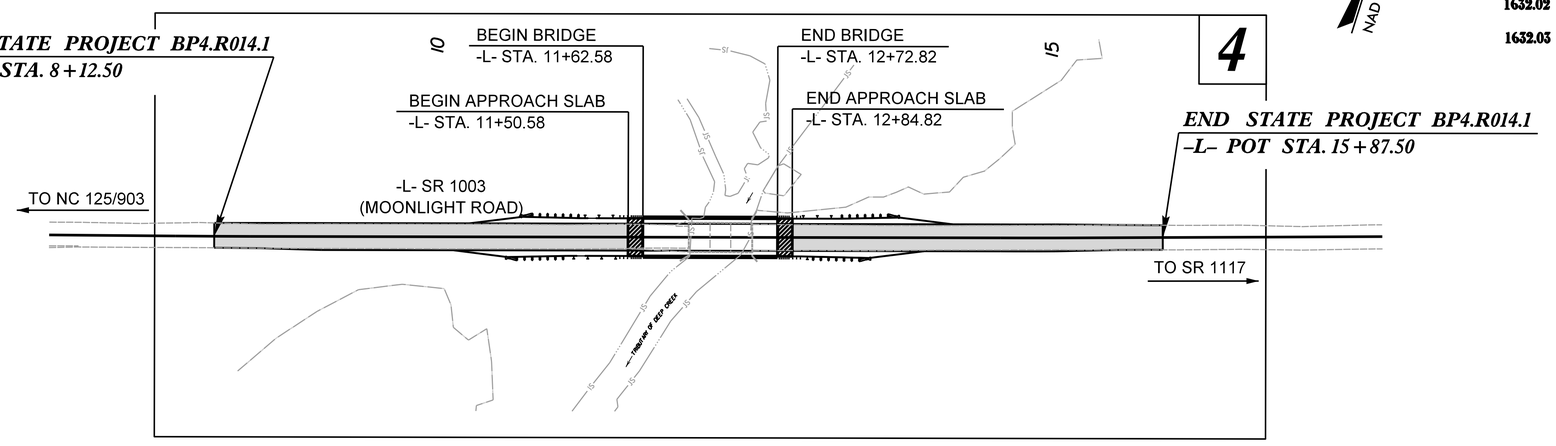

EROSION AND SEDIMENT CONTROL MEASURES

Std. #	Description	Symbol
1630.03	Temporary Silt Ditch	TSD
1630.05	Temporary Diversion	TD
1605.01	Temporary Silt Fence	
1606.01	Special Sediment Control Fence	
1622.01	Temporary Berms and Slope Drains	
1630.02	Silt Basin Type B	
1633.01	Temporary Rock Silt Check Type-A	
	Temporary Rock Silt Check Type-A with Matting and Polyacrylamide (PAM)	
1633.02	Temporary Rock Silt Check Type-B	
	Wattle / Coir Fiber Wattle	SW CFW
	Wattle / Coir Fiber Wattle with Polyacrylamide (PAM)	
1634.01	Temporary Rock Sediment Dam Type-A	
1634.02	Temporary Rock Sediment Dam Type-B	
1635.01	Rock Pipe Inlet Sediment Trap Type-A	
1635.02	Rock Pipe Inlet Sediment Trap Type-B	
1630.04	Stilling Basin	
1630.06	Special Stilling Basin	
	Rock Inlet Sediment Trap:	
1632.01	Type A	A
1632.02	Type B	B
1632.03	Type C	C
	Skimmer Basin	
	Tiered Skimmer Basin	
	Infiltration Basin	

THIS PROJECT CONTAINS EROSION CONTROL PLANS FOR CLEARING AND GRUBBING PHASE OF CONSTRUCTION.

ENVIRONMENTALLY SENSITIVE AREA(S) EXIST ON THIS PROJECT

Refer To E. C. Special Provisions for Special Considerations.

THIS PROJECT HAS BEEN DESIGNED TO SENSITIVE WATERSHED STANDARDS.

GRAPHIC SCALE

30 15 0 30 60

PLANS

THESE EROSION AND SEDIMENT CONTROL PLANS COMPLY WITH THE APPLICABLE REGULATIONS SET FORTH BY THE NCG-010000 GENERAL CONSTRUCTION PERMIT EFFECTIVE APRIL 1, 2019 AND ISSUED BY THE NORTH CAROLINA DEPARTMENT OF ENVIRONMENTAL QUALITY DIVISION OF WATER RESOURCES.

Prepared in the Office of:

ALPHA & OMEGA GROUP
CIVIL | STRUCTURAL | WATER RESOURCES
ALPHA AND OMEGA GROUP, PC
4601 LAKE BOONE TRAIL, SUITE 3C, RALEIGH, NC 27607
Firm License No. C-1684 www.aogroup.com

Prepared in the Office of:

ALPHA & OMEGA GROUP, LLC.
4601 LAKE BOONE TRAIL, SUITE 3C,
RALEIGH NC, 27607
FIRM LICENSE NO. C-1684

Designed by:

CHRISTOPHER STONE — *NAME*
4278 — *LEVEL III CERTIFICATION NO.*

Roadway Standard Drawings

The following roadway english standards as appear in "Roadway Standard Drawings" Roadway Design Unit - N. C. Department of Transportation - Raleigh, N. C., dated January 2018 and the latest revison thereto are applicable to this project and by reference hereby are considered a part of these plans.

1604.01	Railroad Erosion Control Detail	1632.01	Rock Inlet Sediment Trap Type A
1605.01	Temporary Silt Fence	1632.02	Rock Inlet Sediment Trap Type B
1606.01	Special Sediment Control Fence	1632.03	Rock Inlet Sediment Trap Type C
1607.01	Gravel Construction Entrance	1633.01	Temporary Rock Silt Check Type A
1622.01	Temporary Berms and Slope Drains	1633.02	Temporary Rock Silt Check Type B
1630.01	Riser Basin	1634.01	Temporary Rock Sediment Dam Type A
1630.02	Silt Basin Type B	1634.02	Temporary Rock Sediment Dam Type B
1630.03	Temporary Silt Ditch	1635.01	Rock Pipe Inlet Sediment Trap Type A
1630.04	Stilling Basin	1635.02	Rock Pipe Inlet Sediment Trap Type B
1630.05	Temporary Diversion	1640.01	Coir Fiber Baffle
1630.06	Special Stilling Basin	1645.01	Temporary Stream Crossing
1631.01	Matting Installation		

PROJECT REFERENCE NO.	SHEET NO.
BP4.R014J	EC-2
ROADWAY DESIGN ENGINEER	HYDRAULICS ENGINEER

DIVISION OF HIGHWAYS
STATE OF NORTH CAROLINA

SOIL STABILIZATION TIMEFRAMES

SITE DESCRIPTION	STABILIZATION TIME	TIMEFRAME EXCEPTIONS
PERIMETER DIKES, SWALES, DITCHES AND SLOPES	7 DAYS	NONE
HIGH QUALITY WATER (HQW) ZONES	7 DAYS	NONE
SLOPES STEEPER THAN 3:1	7 DAYS	IF SLOPES ARE 10' OR LESS IN LENGTH AND ARE NOT STEEPER THAN 2:1, 14 DAYS ARE ALLOWED.
SLOPES 3:1 OR FLATTER	14 DAYS	7 DAYS FOR SLOPES GREATER THAN 50' IN LENGTH.
ALL OTHER AREAS WITH SLOPES FLATTER THAN 4:1	14 DAYS	NONE, EXCEPT FOR PERIMETERS AND HQW ZONES.

5/14/99

Prepared By:

ALPHA & OMEGA GROUP
CIVIL | STRUCTURAL | WATER RESOURCES
ALPHA AND OMEGA GROUP, PC
8601 LAKE BOONE TRAIL, SUITE 3C, RALEIGH, NC 27607
Firm License No. C-1684 www.aogroup.com

PROJECT REFERENCE NO.	SHEET NO.
BP4.R014	EC-3 /CONST.4
R/W SHEET NO.	
ROADWAY DESIGN ENGINEER	HYDRAULICS ENGINEER

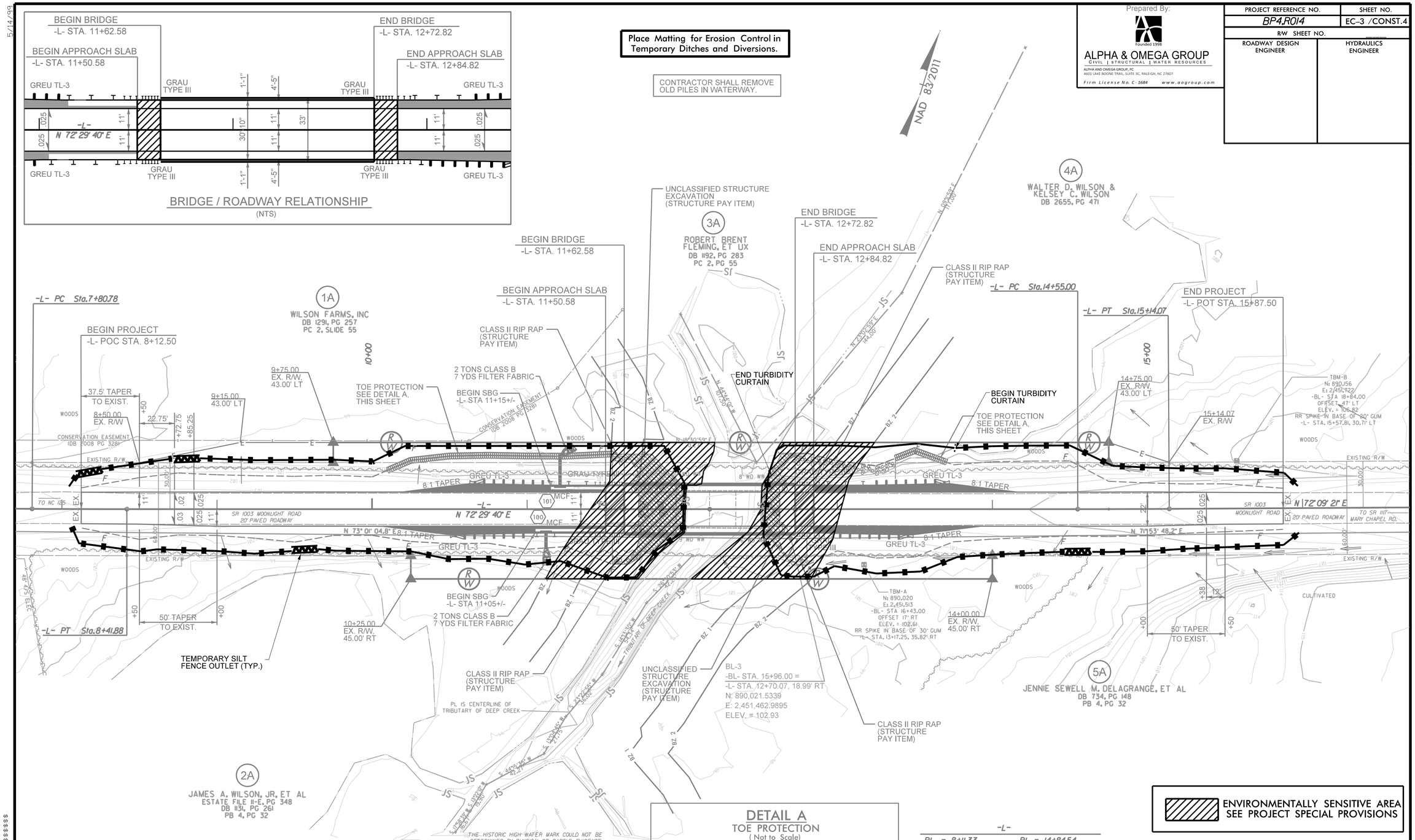

RIGHT OF WAY AREA DATA

PARCEL NO.	PROPERTY OWNERS NAMES	TOTAL ACREAGE	AREA TAKEN	AREA REMAINING RT.	AREA REMAINING LT.	CONST. EASE.	PERM. UTILITY EASE.	TEMP. DRAIN. EASE.
1A	WILSON FARMS, INC.		3,478 SF			1,176 SF		
2A	JAMES A. WILSON, JR., ET AL		2,614 SF					
3A	ROBERT BRENT FLEMING, ET UX		112 SF					
4A	WALTER D. AND KELSEY C. WILSON		2,858 SF			252 SF		
5A	JENNIE SEWELL M. DELAGRANGE, ET AL		3,012 SF					

DETAIL A
TOE PROTECTION
(Not to Scale)

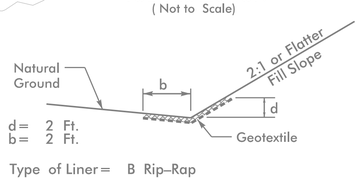

d= 2 Ft.
b= 2 Ft.

Type of Liner= B Rip-Rap

FROM STA. 10+10 +/- TO STA. 11+50 +/- LT
FROM STA. 13+37 +/- TO STA. 13+70 +/- LT

-L-

PI = 8+11.33	PI = 14+84.54
Δ = 0° 21' 00" (LT)	Δ = 0° 20' 18" (LT)
D = 0° 34' 23"	D = 0° 34' 23"
L = 61.10	L = 59.07
T = 30.55	T = 29.54
R = 10,000.00	R = 10,000.00
SE = NC	SE = NC
DS = 60 mph	DS = 60 mph

ENVIRONMENTALLY SENSITIVE AREA SEE PROJECT SPECIAL PROVISIONS

PROP PAVED SHOULDER
BRIDGE APPROACH SLAB
MATERIAL TO BE REMOVED

FOR -L- PROFILE, SEE SHEET NO. 5
FOR STRUCTURE PLANS, SEE SHEET S-1 THRU S-26

$$$$SYSTIME$$$$
$$$$FILENAME$$$$
$$$$DGN$$$$

5/14/99

PROJECT REFERENCE NO.	SHEET NO.
BP4.R014	EC-4 /CONST.4
R/W SHEET NO.	
ROADWAY DESIGN ENGINEER	HYDRAULICS ENGINEER

Prepared By:

ALPHA & OMEGA GROUP
CIVIL | STRUCTURAL | WATER RESOURCES
ALPHA AND OMEGA GROUP, PC
8601 LAKE BOONE TRAIL, SUITE 3C, RALEIGH, NC 27607
Firm License No. C-1684 www.aogroup.com

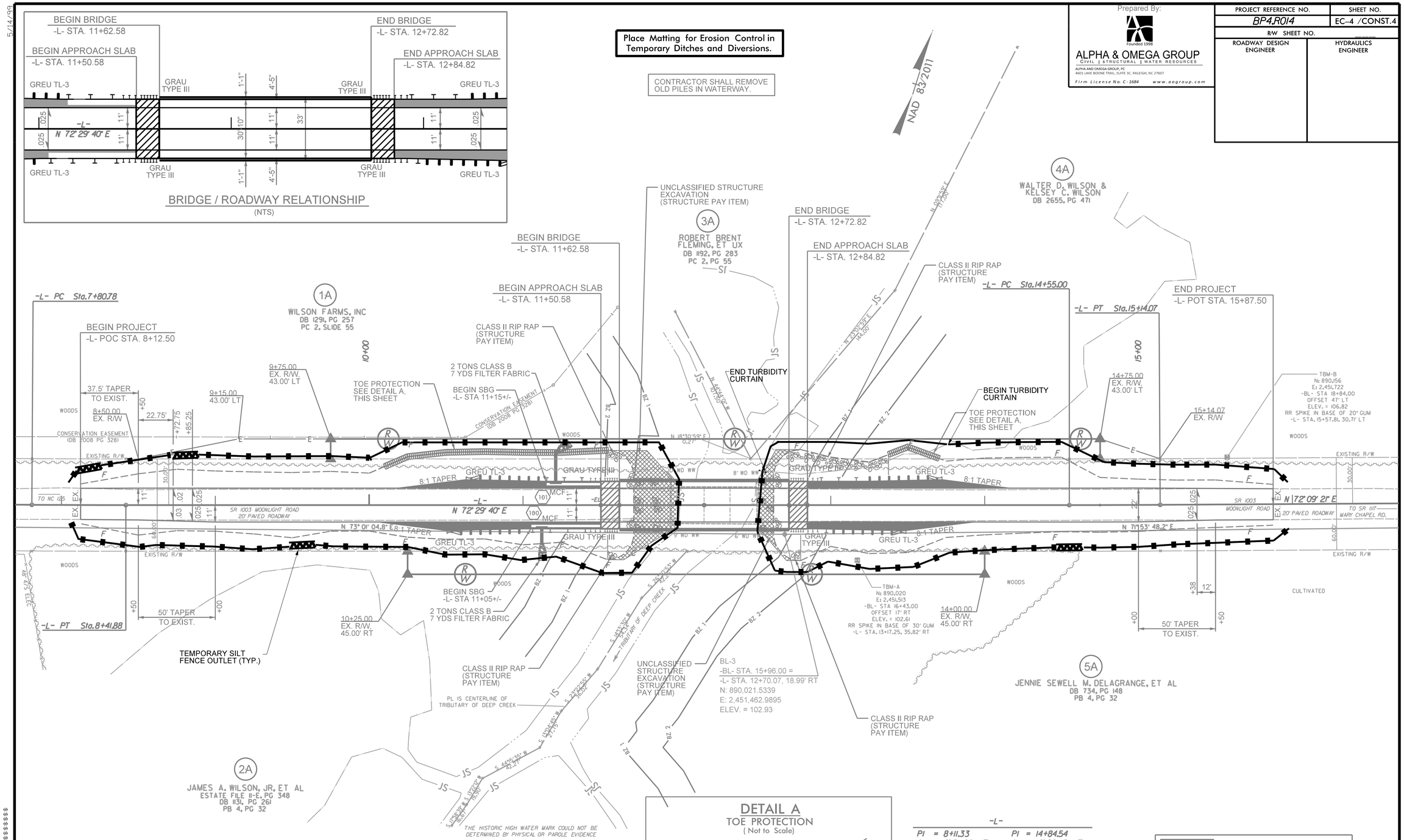

DETAIL A
TOE PROTECTION
(Not to Scale)

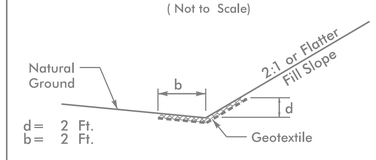

d= 2 Ft.
b= 2 Ft.

Type of Liner= B Rip-Rap

FROM STA. 10+10 +/- TO STA. 11+50 +/- LT
FROM STA. 13+37 +/- TO STA. 13+70 +/- LT

-L-

PI = 8+11.33	PI = 14+84.54
Δ = 0° 21' 00" (LT)	Δ = 0° 20' 18" (LT)
D = 0° 34' 23"	D = 0° 34' 23"
L = 61.10	L = 59.07
T = 30.55	T = 29.54
R = 10,000.00	R = 10,000.00
SE = NC	SE = NC
DS = 60 mph	DS = 60 mph

PROP PAVED SHOULDER
BRIDGE APPROACH SLAB
MATERIAL TO BE REMOVED

FOR -L- PROFILE, SEE SHEET NO. 5
FOR STRUCTURE PLANS, SEE SHEET S-1 THRU S-26

RIGHT OF WAY AREA DATA

PARCEL NO.	PROPERTY OWNERS NAMES	TOTAL ACREAGE	AREA TAKEN	AREA REMAINING RT.	AREA REMAINING LT.	CONST. EASE.	PERM. UTILITY EASE.	TEMP. DRAIN. EASE.
1A	WILSON FARMS, INC.		3,478 SF			1,176 SF		
2A	JAMES A. WILSON, JR., ET AL		2,614 SF					
3A	ROBERT BRENT FLEMING, ET UX		112 SF					
4A	WALTER D. AND KELSEY C. WILSON		2,858 SF			252 SF		
5A	JENNIE SEWELL M. DELAGRANGE, ET AL		3,012 SF					

STATE	STATE PROJECT REFERENCE NO.	SHEET NO.	TOTAL SHEETS
N.C.	BP4.R014	RF-1	
STATE PROJ. NO.	F. A. PROJ. NO.	DESCRIPTION	

PLANTING DETAILS

SEEDLING / LINER BAREROOT PLANTING DETAIL

HEALING IN

1. Locate a healing-in site in a shady, well protected area.
2. Excavate a flat bottom trench 12 inches deep and provide drainage.

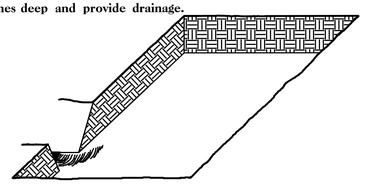

3. Backfill the trench with 2 inches well rotted sawdust. Place a 2 inch layer of well rotted sawdust at a sloping angle at one end of the trench.

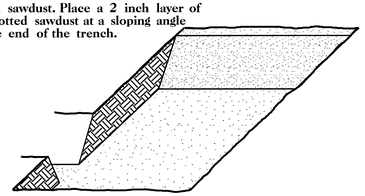

4. Place a single layer of plants against the sloping end so that the root collar is at ground level.

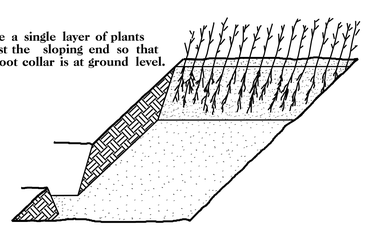

5. Place a 2 inch layer of well rotted sawdust over the roots maintaining a sloping angle.

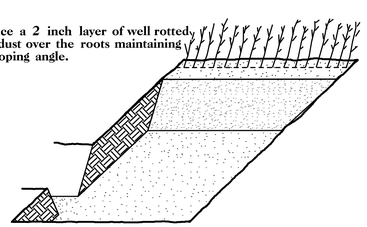

6. Repeat layers of plants and sawdust as necessary and water thoroughly.

DIBBLE PLANTING METHOD

USING THE KBC PLANTING BAR

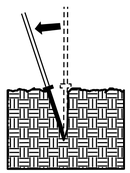

1. Insert planting bar as shown and pull handle toward planter.

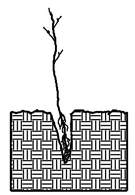

2. Remove planting bar and place seedling at correct depth.

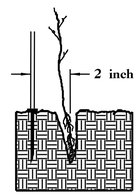

3. Insert planting bar 2 inches toward planter from seedling.

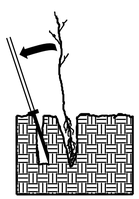

4. Pull handle of bar toward planter, firming soil at bottom.

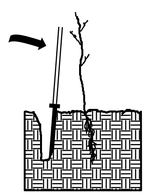

5. Push handle forward firming soil at top.

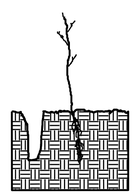

6. Leave compaction hole open. Water thoroughly.

PLANTING NOTES:

PLANTING BAG
During planting, seedlings shall be kept in a moist canvas bag or similar container to prevent the root systems from drying.

KBC PLANTING BAR
Planting bar shall have a blade with a triangular cross section, and shall be 12 inches long, 4 inches wide and 1 inch thick at center.

ROOT PRUNING
All seedlings shall be root pruned, if necessary, so that no roots extend more than 10 inches below the root collar.

REFORESTATION

☐ TREE REFORESTATION SHALL BE PLANTED 6 FT. TO 10 FT. ON CENTER, RANDOM SPACING, AVERAGING 8 FT. ON CENTER, APPROXIMATELY 680 PLANTS PER ACRE.

REFORESTATION

MIXTURE, TYPE, SIZE, AND FURNISH SHALL CONFORM TO THE FOLLOWING:

40% LIRIODENDRON TULIPIFERA	TULIP POPLAR	12 in - 18 in BR
30% PLATANUS OCCIDENTALIS	AMERICAN SYCAMORE	12 in - 18 in BR
30% BETULA NIGRA	RIVER BIRCH	12 in - 18 in BR

REFORESTATION DETAIL SHEET

N.C.D.O.T. - ROADSIDE ENVIRONMENTAL UNIT

TIP PROJECT: BP4.R014

T.I.P. NO.	SHEET NO.
BP4.R014	UC–1

STATE OF NORTH CAROLINA
DIVISION OF HIGHWAYS

UTILITY CONSTRUCTION PLANS
HALIFAX COUNTY

LOCATION: BRIDGE NO 119 OVER TRIBUTARY OF DEEP CREEK ON SR 1003 (MOONLIGHT ROAD)

TYPE OF WORK: WATER LINE RELOCATION

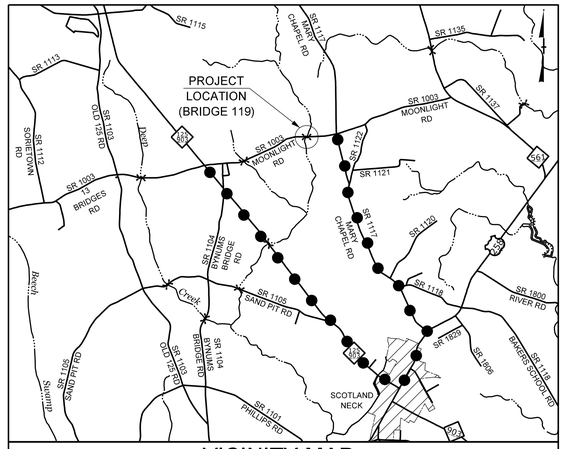

VICINITY MAP
(NOT TO SCALE)

DENOTES DETOUR ROUTE (LENGTH = APPROX. 9 MILES)

NAD 83/2011

UC–4

BEGIN STATE PROJECT BP4.R014.1
–L– POT STA. 8 + 12.50

END STATE PROJECT BP4.R014.1
–L– POT STA. 15 + 87.50

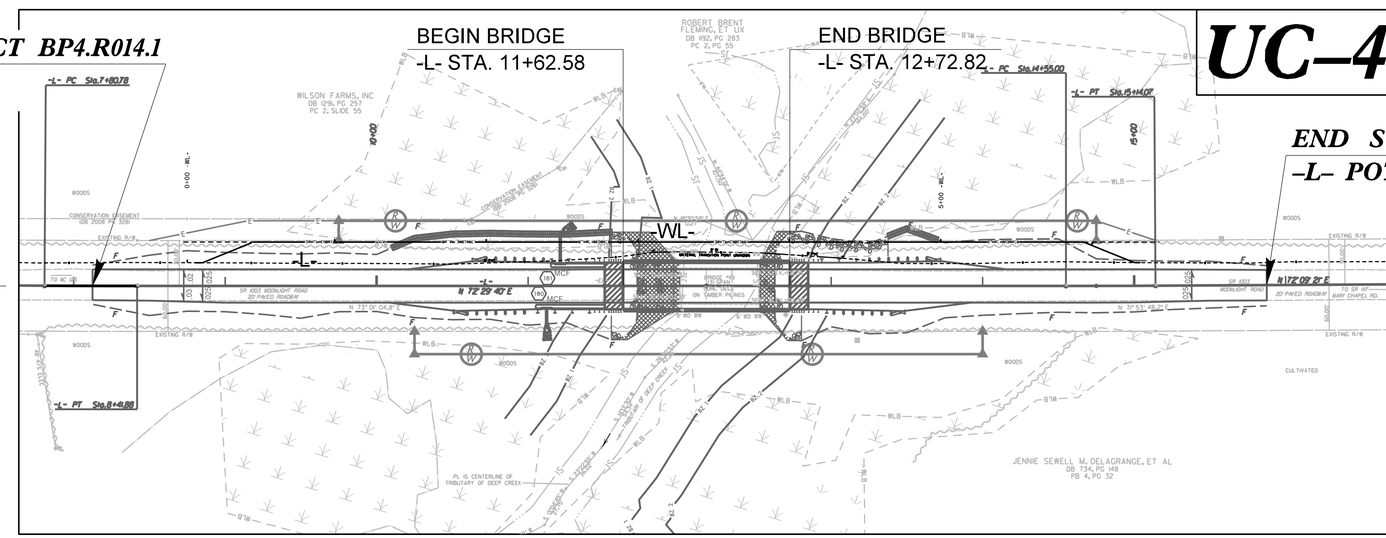

NOTES:
1. CLEARING ON THIS PROJECT SHALL BE PERFORMED TO THE LIMITS ESTABLISHED BY METHOD III.
2. THIS PROJECT IS NOT WITHIN ANY MUNICIPAL BOUNDARIES.

DOCUMENT NOT CONSIDERED FINAL UNTIL ALL SIGNATURES ARE COMPLETED

GRAPHIC SCALES

30 15 0 30 60
PLANS

30 15 0 30 60
PROFILE (HORIZONTAL)

5 2.5 0 5 10
PROFILE (VERTICAL)

INDEX OF SHEETS

SHEET NO.:	DESCRIPTION:
UC–1	TITLE SHEET
UC–2	UTILITY SYMBOLOGY
UC–3	NOTES
UC–3A	DETAILS
UC–4	UTILITY CONSTRUCTION SHEETS
UC–5	PROFILE SHEETS

WATER AND SEWER OWNERS ON PROJECT

(A) WATER – HALIFAX COUNTY PUBLIC UTILITIES

PREPARED IN THE OFFICE OF:

ALPHA & OMEGA GROUP
CIVIL | STRUCTURAL | WATER RESOURCES
4601 LAKE BOONE TRAIL, SUITE 3C, RALEIGH, NC 27607
OFFICE: (919) 981-0310
HTTP://WWW.AOGROUP.COM
FIRM LICENSE NO. C-1684
Founded 1998

TED BARTELT, PE	PROJECT ENGINEER
MICHAEL YOUNG, PE	PROJECT DESIGN ENGINEER

SEAL

NORTH CAROLINA PROFESSIONAL SEAL 022982 ENGINEER MICHAEL A. YOUNG

DIVISION OF HIGHWAYS
HIGHWAY DIVISION 4
509 WARD BOULEVARD
PO BOX 3165
WILSON NC 27895
PHONE (252) 640–6400
FAX (252) 234–6174

RUSSELL BROADWELL	PROJECT MANAGER
CHAD COGGINS	DIV. ENVIRONMENTAL OFFICER
KYLE PLEASANT	DIVISION UTILITY ENGINEER
FRANK ZDELAR	DIV. UTILITY COORDINATOR

09/08/99
$$$$SYSTIME$$$$
$$$$DGN$$$$
$$$$USERNAME$$$$

PROJECT REFERENCE NO.	SHEET NO.
BP4.R014	UC-2

STATE OF NORTH CAROLINA
DIVISION OF HIGHWAYS

UTILITIES PLAN SHEET SYMBOLS

PROPOSED WATER SYMBOLS

- Water Line (Sized as Shown) — 12" WL
- 11¼ Degree Bend
- 22½ Degree Bend
- 45 Degree Bend
- 90 Degree Bend
- Plug
- Tee
- Cross
- Reducer
- Gate Valve — GV
- Butterfly Valve — BV
- Tapping Valve — TGV
- Line Stop — LS
- Line Stop with Bypass — LS/BP
- Blow Off — BO
- Fire Hydrant — PFH
- Relocate Fire Hydrant — RFH
- Remove Fire Hydrant — REM FH
- Water Meter — PWM
- Relocate Water Meter — RWM
- Remove Water Meter — REM WM
- Water Pump Station — PS(W)
- RPZ Backflow Preventer — PBPZ
- DCV Backflow Preventer — PBFP
- Relocate RPZ Backflow Preventer — RBPZ
- Relocate DCV Backflow Preventer — RBFP

PROPOSED SEWER SYMBOLS

- Gravity Sewer Line (Sized as Shown) — 12" SS
- Force Main Sewer Line (Sized as Shown) — 12" FSS
- Manhole (Sized per Note)
- Sewer Pump Station — PS(SS)

PROPOSED MISCELLANOUS UTILITIES SYMBOLS

- Power Pole
- Telephone Pole
- Joint Use Pole
- Telephone Pedestal — TEL PED
- Utility Line by Others (Type as Shown)
- Trenchless Installation — 12" TL INSTALL
- Encasement by Open Cut — 24" ENCAS BY OC
- Encasement — 24" ENCASEMENT
- Thrust Block
- Air Release Valve — AR
- Utility Vault — UV
- Concrete Pier — CP
- Steel Pier — SP
- Plan Note — NOTE
- Pay Item Note — PAY ITEM

EXISTING UTILITIES SYMBOLS

- Power Pole
- Telephone Pole
- Joint Use Pole
- Utility Pole
- Utility Pole with Base
- H-Frame Pole
- Power Transmission Line Tower
- Water Manhole
- Power Manhole
- Telephone Manhole
- Sanitary Sewer Manhole
- Hand Hole for Cable
- Power Transformer
- Telephone Pedestal
- CATV Pedestal
- Gas Valve
- Gas Meter
- Located Miscellaneous Utility Object
- Abandoned According to Utility Records — AATUR
- End of Information — E.O.I.
- *Underground Power Line
- *Underground Telephone Cable
- *Underground Telephone Conduit
- *Underground Fiber Optics Telephone Cable
- *Underground TV Cable
- *Underground Fiber Optics TV Cable
- *Underground Gas Pipeline
- Aboveground Gas Pipeline — A/G Gas
- *Underground Water Line
- Aboveground Water Line — A/G Water
- *Underground Gravity Sanitary Sewer Line
- Aboveground Gravity Sanitary Sewer Line — A/G Sanitary Sewer
- *Underground SS Forced Main Line
- Underground Unknown Utility Line
- SUE Test Hole
- Water Meter
- Water Valve
- Fire Hydrant
- Sanitary Sewer Cleanout

*For Existing Utilities

- Utility Line Drawn from Record (Type as Shown)
- Designated Utility Line (Type as Shown)

REV: 2/1/2012

$$$$SYSTIME$$$$
$$$$DGN$$$$
$$$$FILENAME$$$$

Prepared By:

ALPHA & OMEGA GROUP
CIVIL | STRUCTURAL | WATER RESOURCES
ALPHA AND OMEGA GROUP, PC
8601 LAKE BOONE TRAIL, SUITE 3C, RALEIGH, NC 27607
Firm License No. C-1684 www.aogroup.com

PROJECT REFERENCE NO.	SHEET NO.
BP4.R014	UC-3
DESIGNED BY: MAY	
DRAWN BY: CTS	
CHECKED BY: TGZ	
APPROVED BY: XXX	
REVISED:	
NORTH CAROLINA DEPARTMENT OF TRANSPORTATION	
UTILITIES ENGINEERING SEC. PHONE:(919)707-6690 FAX:(919)250-4151	UTILITY CONSTRUCTION PLANS ONLY

NORTH CAROLINA PROFESSIONAL SEAL 022982 ENGINEER MICHAEL A YOUNG

UTILITY CONSTRUCTION

DOCUMENT NOT CONSIDERED FINAL UNLESS ALL SIGNATURES COMPLETED

GENERAL NOTES:

1. THE PROPOSED UTILITY CONSTRUCTION SHALL MEET THE APPLICABLE REQUIREMENTS OF THE NC DEPARTMENT OF TRANSPORTATION'S "STANDARD SPECIFICATIONS FOR ROADS AND STRUCTURES" DATED JANUARY 2018.

2. THE EXISTING WATER LINE UTILITIES BELONG TO HALIFAX COUNTY.

   CONTACT: GREG GRIFFIN
   PHONE: 252-583-1451

3. ALL WATER LINES TO BE INSTALLED WITHIN COMPLIANCE OF THE RULES AND REGULATIONS OF THE NORTH CAROLINA DEPARTMENT OF ENVIRONMENTAL AND NATURAL RESOURCES, DIVISION OF ENVIRONMENTAL HEALTH.

4. THE UTILITY OWNER OWNS THE EXISTING UTILITY FACILITIES AND WILL OWN THE NEW UTILITY FACILITIES AFTER ACCEPTANCE BY THE DEPARTMENT. THE DEPARTMENT OWNS THE CONSTRUCTION CONTRACT AND HAS ADMINISTRATIVE AUTHORITY. COMMUNICATIONS AND DECISIONS BETWEEN THE CONTRACTOR AND UTILITY OWNER ARE NOT BINDING UPON THE DEPARTMENT OR THIS CONTRACT UNLESS AUTHORIZED BY THE ENGINEER. AGREEMENTS BETWEEN THE UTILITY OWNER AND CONTRACTOR FOR THE WORK THAT IS NOT PART OF THIS CONTRACT OR IS SECONDARY TO THIS CONTRACT ARE ALLOWED, BUT ARE NOT BINDING UPON THE DEPARTMENT.

5. PROVIDE ACCESS FOR THE DEPARTMENT PERSONNEL AND THE OWNER'S REPRESENTATIVES TO ALL PHASES OF CONSTRUCTION. NOTIFY DEPARTMENT PERSONNEL AND THE UTILITY OWNER TWO WEEKS PRIOR TO COMMENCEMENT OF ANY WORK AND ONE WEEK PRIOR TO SERVICE INTERRUPTION. KEEP UTILITY OWNERS' REPRESENTATIVES INFORMED OF WORK PROGRESS AND PROVIDE OPPROTUNITY FOR INSPECTION OF CONSTRUCTION AND TESTING.

6. THE PLANS DEPICT THE BEST AVAILABLE INFORMATION FOR THE LOCATION, SIZE, AND TYPE OF MATERIAL FOR ALL EXISTING UTILITIES. MAKE INVESTIGATIONS FOR DETERMINING THE EXACT LOCATION, SIZE, AND TYPE MATERIAL OF THE EXISTING FACILITIES AS NECESSARY FOR THE CONSTRUCTION OF THE PROPOSED UTILITIES AND FOR AVOIDING DAMAGE TO EXISTING FACILITIES. REPAIR ANY DAMAGE INCURRED TO EXISTING FACILITIES TO THE ORIGINAL OR BETTER CONDITION AT NO ADDITONAL COST TO THE DEPARTMENT.

7. MAKE FINAL CONNECTIONS OF THE NEW WORK TO THE EXISTING SYSTEM WHERE INDICATED ON THE PLANS, AS REQUIRED TO FIT THE ACTUAL CONDITIONS, OR AS DIRECTED.

8. MAKE CONNECTIONS BETWEEN EXISTING AND PROPOSED UTILITIES AT TIMES MOST CONVENIENT TO THE PUBLIC, WITHOUT ENDANGERING THE UTILITY SERVICE, AND IN ACCORDANCE WITH THE UTILITY OWNER'S REQUIREMENTS. MAKE CONNECTIONS ON WEEKENDS, AT NIGHT, AND ON HOLIDAYS IF NECESSARY.

9. ALL UTILITY MATERIALS SHALL BE APPROVED PRIOR TO DELIVERY TO THE PROJECT. SEE 1500-7, "SUBMITTALS AND RECORDS" IN SECTION 1500 OF THE STANDARD SPECIFICATIONS.

10. CONTRACTOR SHALL NOT OPERATE ANY VALVES ON THE EXISTING UTILITY SYSTEMS. CONTRACTOR SHALL CONTACT THE UTILITY OWNER TO CONDUCT STRATEGIC OPERATION OF VALVES FOR SERVICE INTERRUPTION IN ORDER TO PERFORM SPECIFIC WORK.

PROJECT NOTES:

1. THERE ARE NO KNOWN WATER SERVICE LINES OR SEWER SERVICE LINES WITHIN THE PROJECT LIMITS.

2. CONTRACTOR'S ATTENTION IS DIRECTED TO SECTIONS 102, 107, AND 1550 OF THE STANDARD SPECIFICATIONS CONCERNING TRENCHLESS INSTALLATION. IT IS CONTRACTOR'S RESPONSIBILITY TO HAVE BORE DESIGNED AND SEALED BY A LICENSED NORTH CAROLINA PROFESSIONAL ENGINEER. NO DAMAGE IS ALLOWED TO RIVER, STREAM, CREEK, WETLANDS, OR BUFFER ZONES.

3. PVC PIPE MANUFACTURED MORE THAN TWELVE (12) MONTHS BEFORE THE INSTALLATION DATE WILL NOT BE ACCEPTED.

4. IN THE EVENT THAT EXCESSIVE GROUNDWATER OR SPRINGS ARE ENCOUNTERED DURING PIPE CONSTRUCTION, THE CONTRACTOR SHALL EMPLOY ALL METHODS NECESSARY TO KEEP THE TRENCHES DRY AS DIRECTED BY THE RESIDENT ENGINEER.

5. ALL PROPOSED FITTINGS (BENDS, TEES, CROSSES, REDUCERS, PLUGS, ETC.) SHALL BE ADEQUATELY RESTRAINED BY THE USE OF RESTRAINED JOINT CONSTRUCTION AND/OR CAST IN PLACE CONCRETE THRUST RESTRAINTS AS DETAILED ON THESE DRAWINGS, OR AS DIRECTED BY THE RESIDENT ENGINEER.

6. PROPOSED OPEN TRENCH WATER LINE SHALL BE 12" DUCTILE IRON PIPE, CLASS 350, RESTRAINED JOINT PIPE; OR 12" PVC C-900 DR-18 PIPE.

7. PROPOSED WATER LINE FOR DIRECTIONAL DRILLING SHALL BE FUSIBLE PVC C-900, DR-18 PIPE THAT CONFORMS TO NSF-61.

8. ALL WATER LINE FITTINGS, 4-INCHES THROUGH 12-INCHES IN DIAMETER, SHALL BE DUCTILE IRON.

9. ALL VALVES ON WATER LINE SHALL BE GATE VALVES.

10. ELECTRONIC MARKER BALLS SHALL BE INSTALLED DIRECTLY OVER THE CENTERLINE OF PVC AND DUCTILE IRON WATER LINE PIPE AND ALL FITTINGS. MARKER BALL SHALL BE BURIED NOT LESS THAN 18-INCHES AND NO MORE THAN 2 FEET. MARKER BALLS SHALL BE HAND BACKFILLED TO A DEPTH OF 1 FOOT ABOVE MARKER BALL TO PREVENT MOVEMENT OR DAMAGE.

11. PROPOSED WATER LINE SHALL BE PRESSURE TESTED, CHLORINATED, AND HAVE A BACTERIOLOGICAL SAMPLE COLLECTED AND SENT TO A STATE CERTIFIED LABORATORY FOR ANALYSIS. SAMPLE SHALL BE PULLED IN THE PRESENCE OF THE UTILITY OWNER'S REPRESENTATIVE. PROPOSED WATER LINE SHALL BE CERTIFIED BEFORE THE TIE-INS ARE MADE TO THE EXISTING WATER LINE.

12. FINAL CONNECTIONS TO EXISTING FACILITIES SHALL BE WITNESSED BY UTILITY OWNER'S REPRESENTATIVE.

5/14/99
$$$$SYSTIME$$$$
$$$$DGN$$$$
$$$$LINE$$$$

5/14/99

Prepared By:
Founded 1998
ALPHA & OMEGA GROUP
CIVIL | STRUCTURAL | WATER RESOURCES
ALPHA AND OMEGA GROUP, PC
4601 LAKE BOONE TRAIL, SUITE 3C, RALEIGH, NC 27607
Firm License No. C-1684 www.aogroup.com

PROJECT REFERENCE NO.	SHEET NO.
BP4.R014	UC-3A

DESIGNED BY: MAY
DRAWN BY: CTS
CHECKED BY: TGZ
APPROVED BY: XXX
REVISED:

NORTH CAROLINA DEPARTMENT OF TRANSPORTATION
UTILITIES ENGINEERING SEC.
PHONE:(919)707-6690
FAX:(919)250-4151

NORTH CAROLINA PROFESSIONAL SEAL 022982 ENGINEER MICHAEL A YOUNG

UTILITY CONSTRUCTION PLANS ONLY

UTILITY CONSTRUCTION

DOCUMENT NOT CONSIDERED FINAL UNLESS ALL SIGNATURES COMPLETED

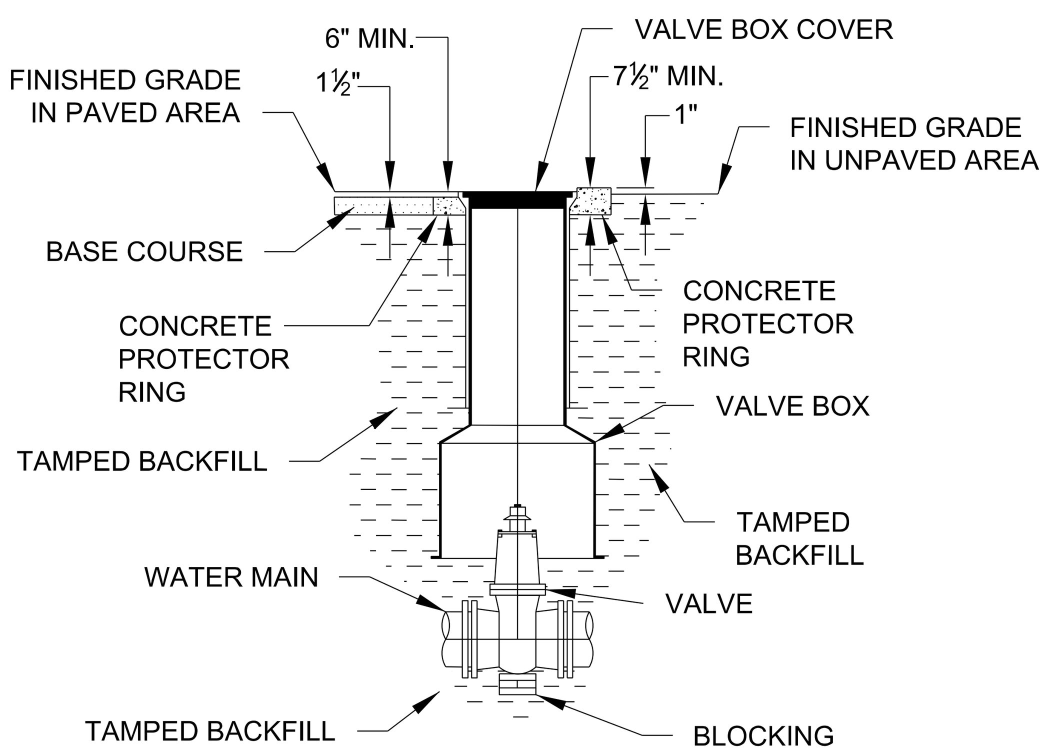

NOTES:
1. D.I.P. MAY BE USED FOR VALVE BOX EXTENSIONS.
2. VALVE BOX SHOULD NOT CONTACT WATER MAIN OR VALVE.
3. CONCRETE PROTECTOR RING SHALL BE USED IN ALL UNPAVED AREAS.
4. ALL MATERIALS USED IN THE POTABLE WATER SYSTEM MUST BE NSF61 AND NSF372 CERTIFIED AND MEET THE LATEST FEDERAL SAFE DRINKING WATER ACT REQUIREMENTS.

VALVE AND VALVE BOX INSTALLATION

NOT TO SCALE

NOTE: PIPE SHALL BE BEDDED UP TO SPRING LINE AND MINIMUM 4" BELOW BOTTOM OF PIPE WHEN WET AREAS ARE ENCOUNTERED.

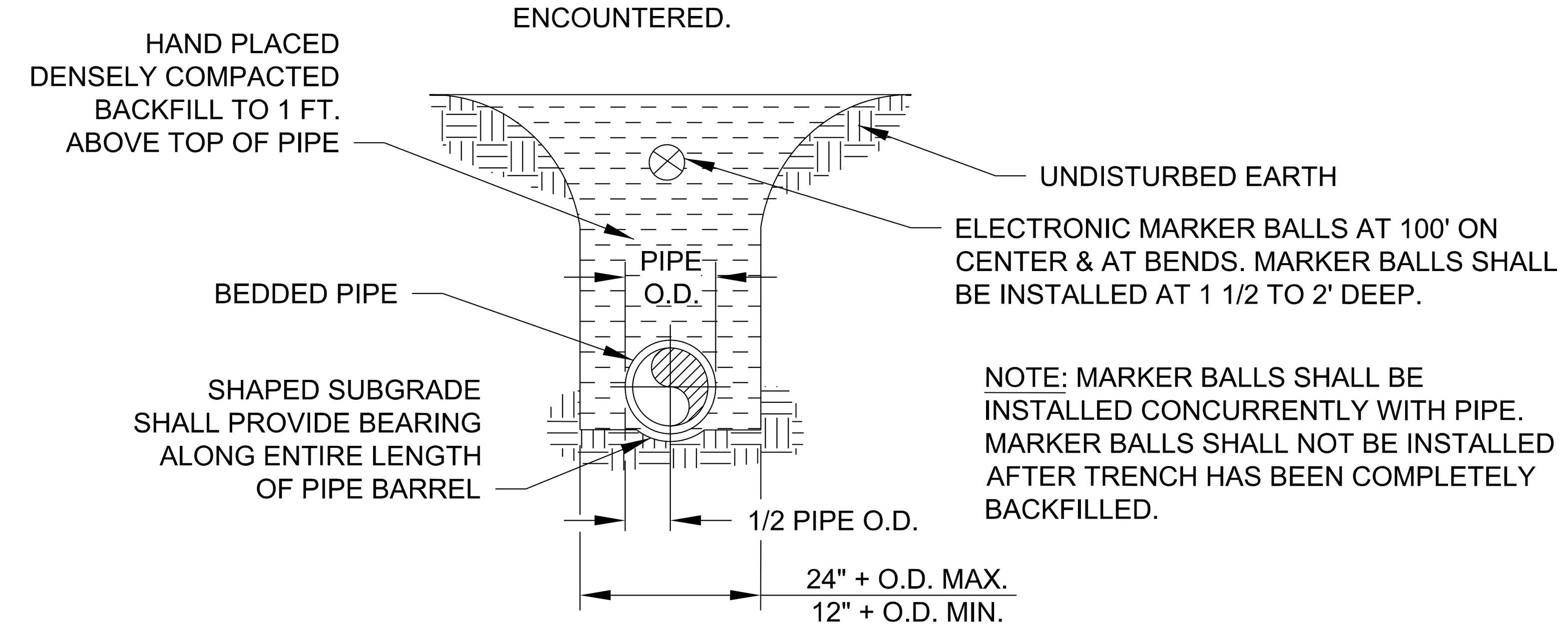

NOTE: MARKER BALLS SHALL BE INSTALLED CONCURRENTLY WITH PIPE. MARKER BALLS SHALL NOT BE INSTALLED AFTER TRENCH HAS BEEN COMPLETELY BACKFILLED.

NOTE:
WATER MAINS 8"Ø AND SMALLER SHALL HAVE A MINIMUM OF 3' COVER. WATER MAINS LARGER THAN 8"Ø SHALL HAVE A MINIMUM OF 3'-6" COVER.

PIPE LAYING CONDITION

NOT TO SCALE

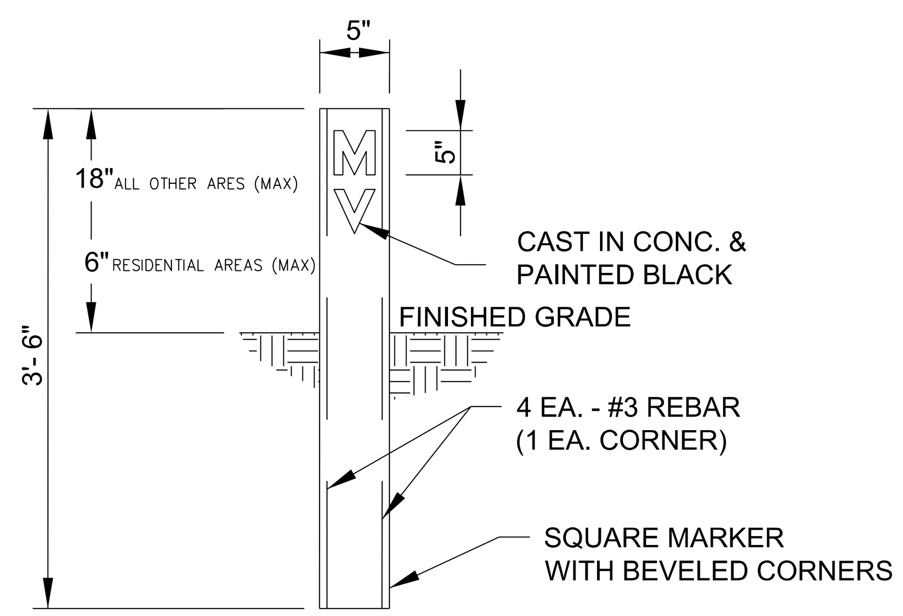

NOTES:
1. VALVE MARKERS SHALL BE PLACED AT R/W.
2. LETTERS "MV" SHALL FACE TOWARDS VALVE.
3. MARKER SHALL HAVE BRASS OR BRONZE EMBED ON TOP OR SIDE.
4. CONTRACTOR SHALL STAMP DISTANCE TO CENTER OF VALVE INTO EMBED.
5. BLOW-OFF ASSEMBLY SHALL INCLUDE 1 EA. MARKER W/ "BO" OR "MV" CAST.

VALVE MARKER DETAIL

NOT TO SCALE

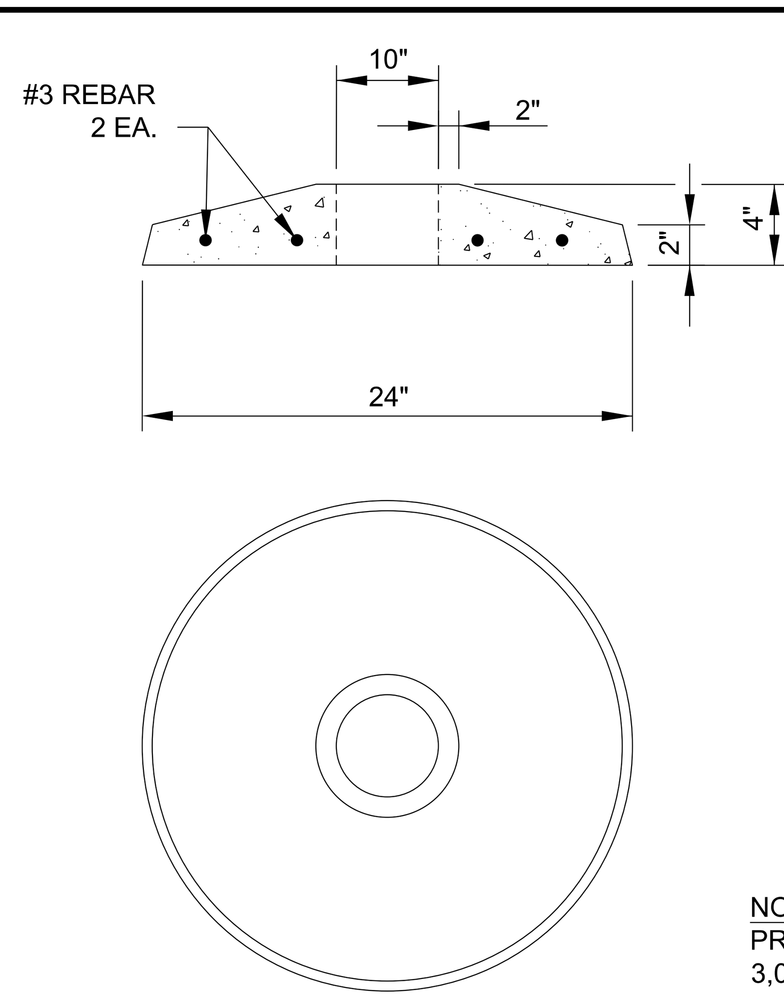

NOTE:
PROTECTOR RING SHALL BE 3,000 P.S.I. CONCRETE.

CONCRETE PROTECTOR RING

NOT TO SCALE

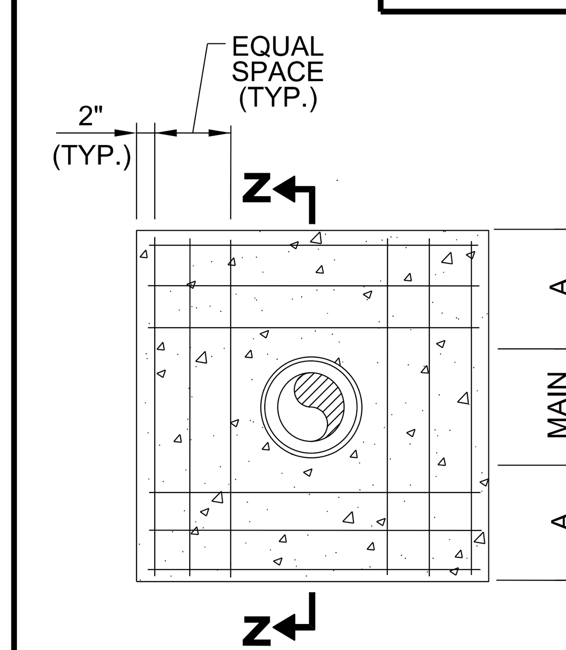

REINFORCING

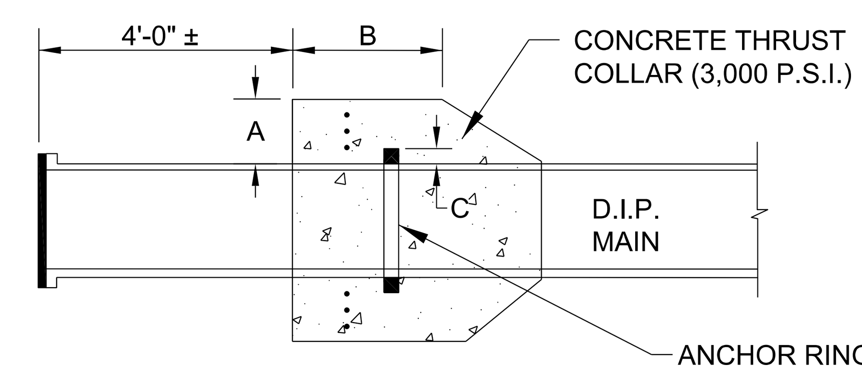

SECTION Z-Z

NOTE:
6" TO 16" MAINS = 12-NO. 7 BARS
20" TO 36" MAINS = 12-NO. 8 BARS
BARS PLACED AS SHOWN

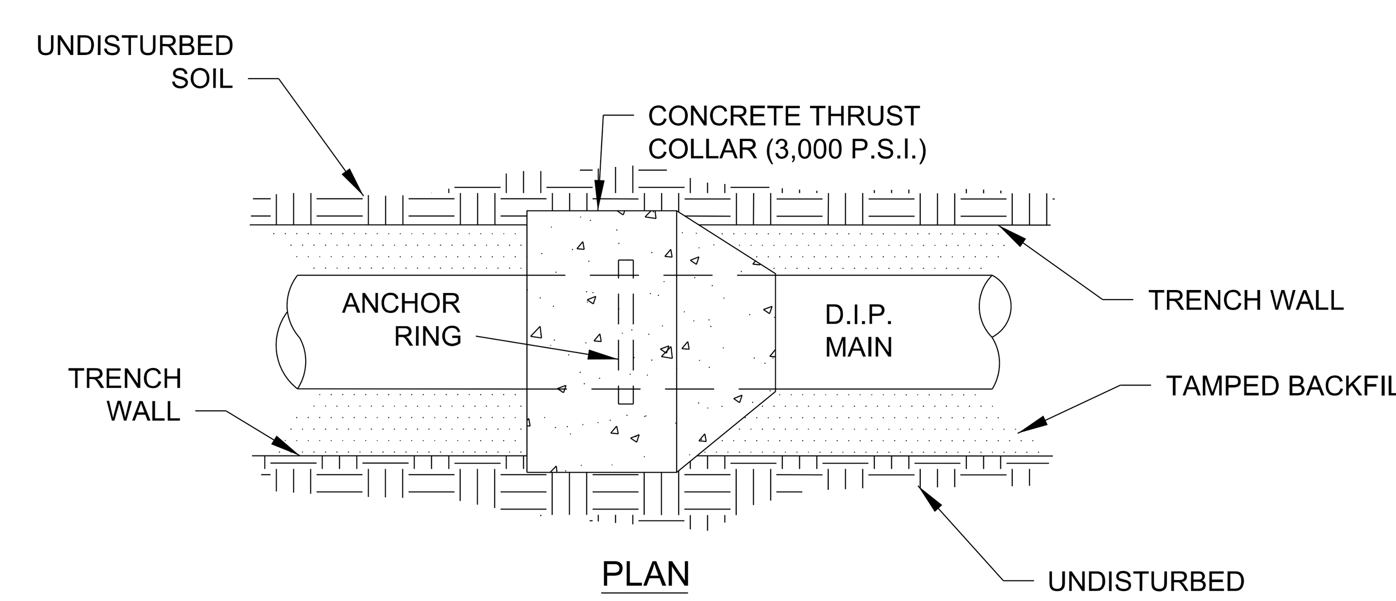

PLAN

SCHEDULE				
PIPE DIAMETER	CONCRETE THRUST COLLAR		ANCHOR COLLAR	RINGS REQUIRED
	A	B	C	
6",8",12"	1'-0"	1'-0"	2"	ONE
16"	1'-4"	1'-0"	2"	ONE
20"	1'-4"	1-0"	3"	ONE
24"	1'-4"	1'-0"	3"	TWO
30"	1'-4"	1'-2"	4"	TWO
36"	1'-4"	1'-4"	4"	TWO

THRUST COLLAR INSTALLATION

NOT TO SCALE

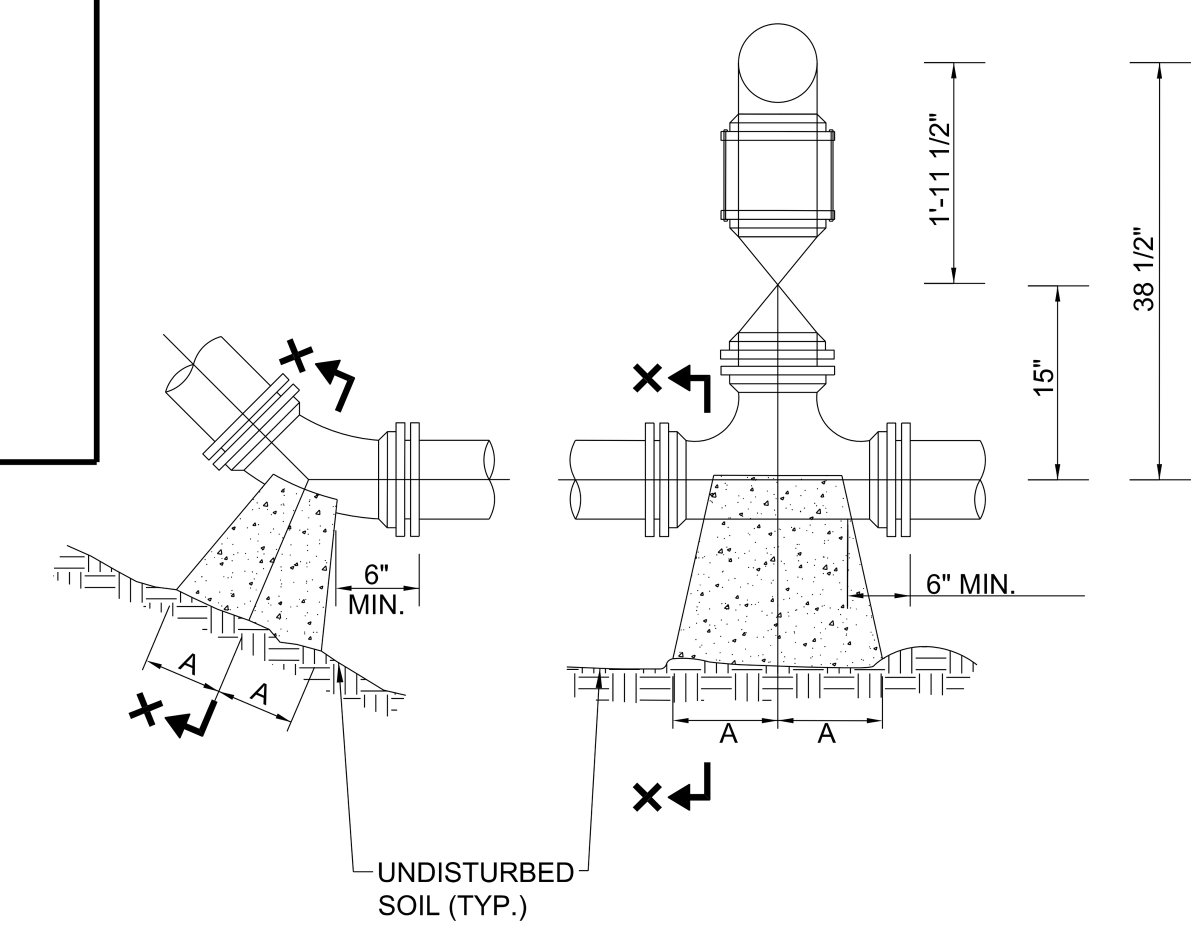

PLAN BENDS

PLAN TEES

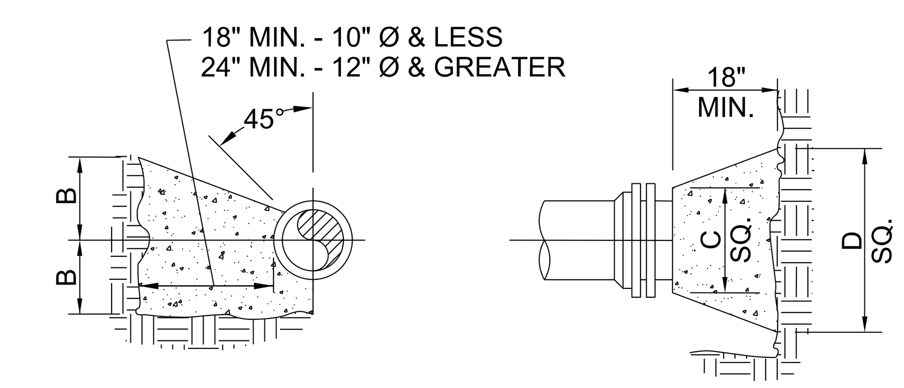

SECTION X-X
BENDS & TEES

PLAN & ELEV.
PLUGS

NOTES:
1. CONCRETE SHALL BE 3,000 PSI MIN.
2. CONCRETE FOR THRUST BLOCKING SHALL BE KEPT FAIRLY DRY, THUS MAKING THE CONCRETE WEDGE SHAPE MORE EASILY FORMED WITH THE WIDEST PART (BLOCKING AREA) AGAINST UNDISTURBED SOIL.
3. NO CONCRETE SHALL COVER ANY BOLTS OR GLANDS.
4. ALL FITTING AND ACCESSORIES TO BE WRAPPED WITH 10 MIL POLYETHYLENE PRIOR TO POURING BLOCKING.
5. DIMENSIONS OF THRUST BLOCKING SHALL BE AS SHOWN IN THE TABLE BELOW.

PIPE SIZE	90° BEND		45° BEND		22 1/2° BEND		11 1/4° BEND		TEE		PLUG	
	A	B	A	B	A	B	A	B	A	B	C	D
4"	8"	12"	8"	8"	6"	6"	6"	6"	8"	9"	10"	16"
6"	10"	12"	8"	10"	8"	8"	8"	8"	10"	10"	12"	18"
8"	15"	13"	10"	10"	8"	8"	8"	8"	10"	12"	12"	24"
10"	16"	14"	10"	12"	6"	10"	6"	10"	11"	14"	14"	25"
12"	20"	16"	12"	14"	8"	12"	8"	12"	14"	16"	16"	30"
14"	22"	18"	14"	16"	10"	14"	10"	14"	16"	18"	18"	34"
16"	26"	20"	16"	18"	12"	16"	12"	16"	18"	20"	20"	36"
20"	36"	26"	24"	18"	18"	13"	12"	9"	19"	18"	24"	48"
24"	48"	33"	30"	21"	18"	18"	15"	11"	21"	21"	28"	56"

THRUST BLOCK DETAIL

NOT TO SCALE

$$$$$$SYSTIME$$$$$
$$$$$$$$$$DGN$$$$$$$$$$$$$$$$$$$$$
$$$$$USERNAME$$$$

UTILITY OWNERS ON THIS SHEET:

WATER LINE
HALIFAX COUNTY
EXISTING UTILITY: 8" WATER
CONTACT: MR. GREG GRIFFIN
PHONE: 252-583-1451

Prepared By:
ALPHA & OMEGA GROUP
CIVIL | STRUCTURAL | WATER RESOURCES
ALPHA AND OMEGA GROUP, PC
8601 LAKE BOONE TRAIL, SUITE 3C, RALEIGH, NC 27607
Firm License No. C-1684 www.aogroup.com

PROJECT REFERENCE NO.	SHEET NO.
BP4.R014	UC-4
DESIGNED BY: MAY	
DRAWN BY: CTS	
CHECKED BY: TGZ	
APPROVED BY: XXX	
REVISED:	
NORTH CAROLINA DEPARTMENT OF TRANSPORTATION	
UTILITIES ENGINEERING SEC. PHONE:(919)707-6690 FAX:(919)250-4151	UTILITY CONSTRUCTION PLANS ONLY

NORTH CAROLINA PROFESSIONAL SEAL 022982 ENGINEER MICHAEL A. YOUNG

UTILITY CONSTRUCTION

DOCUMENT NOT CONSIDERED FINAL UNLESS ALL SIGNATURES COMPLETED

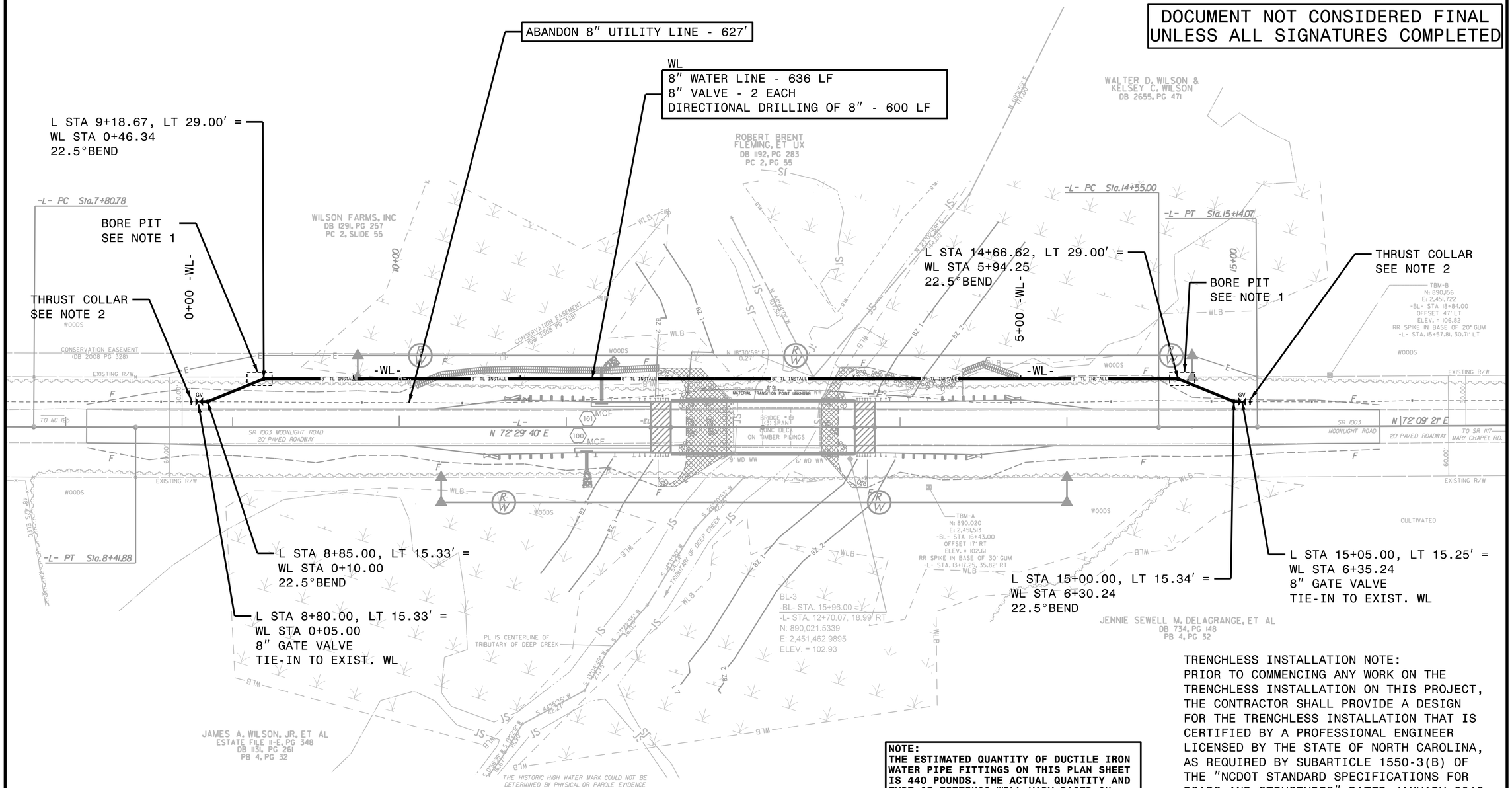

NOTE:
THE ESTIMATED QUANTITY OF DUCTILE IRON WATER PIPE FITTINGS ON THIS PLAN SHEET IS 440 POUNDS. THE ACTUAL QUANTITY AND TYPE OF FITTINGS WILL VARY BASED ON FIELD CONDITIONS.

TRENCHLESS INSTALLATION NOTE:
PRIOR TO COMMENCING ANY WORK ON THE TRENCHLESS INSTALLATION ON THIS PROJECT, THE CONTRACTOR SHALL PROVIDE A DESIGN FOR THE TRENCHLESS INSTALLATION THAT IS CERTIFIED BY A PROFESSIONAL ENGINEER LICENSED BY THE STATE OF NORTH CAROLINA, AS REQUIRED BY SUBARTICLE 1550-3(B) OF THE "NCDOT STANDARD SPECIFICATIONS FOR ROADS AND STRUCTURES" DATED JANUARY 2018.

NOTES:
1. BORE PIT SIZE TO BE DTERMINED BY CONTRACTOR.
2. INSTALL THRUST COLLAR ON EXISTING WATERLINE, 4 FEET FROM JOINT WITH PROPOSED VALVE. SEE DETAIL ON SHEET UC-3A.

REFER TO SHEET UC-5 FOR WL PROFILE.

5/14/99
$$$$SYSTIME$$$$
$$$$DGN$$$$
$$$$FILENAME$$$$

Prepared By:

ALPHA & OMEGA GROUP
CIVIL | STRUCTURAL | WATER RESOURCES
ALPHA AND OMEGA GROUP, PC
4601 LAKE BOONE TRAIL, SUITE 3C, RALEIGH, NC 27607
Firm License No. C-1684 www.aogroup.com

PROJECT REFERENCE NO.	SHEET NO.
BP4.R014	UC-5

DESIGNED BY:	MAY
DRAWN BY:	CTS
CHECKED BY:	TGZ
APPROVED BY:	XXX
REVISED:	

NORTH CAROLINA DEPARTMENT OF TRANSPORTATION
UTILITIES ENGINEERING SEC.
PHONE:(919)707-6690
FAX:(919)250-4151

NORTH CAROLINA PROFESSIONAL ENGINEER SEAL 022982 MICHAEL A YOUNG

UTILITY CONSTRUCTION PLANS ONLY

UTILITY CONSTRUCTION

DOCUMENT NOT CONSIDERED FINAL UNLESS ALL SIGNATURES COMPLETED

-WL-

FOR PLAN, SEE SHEET UC-4.

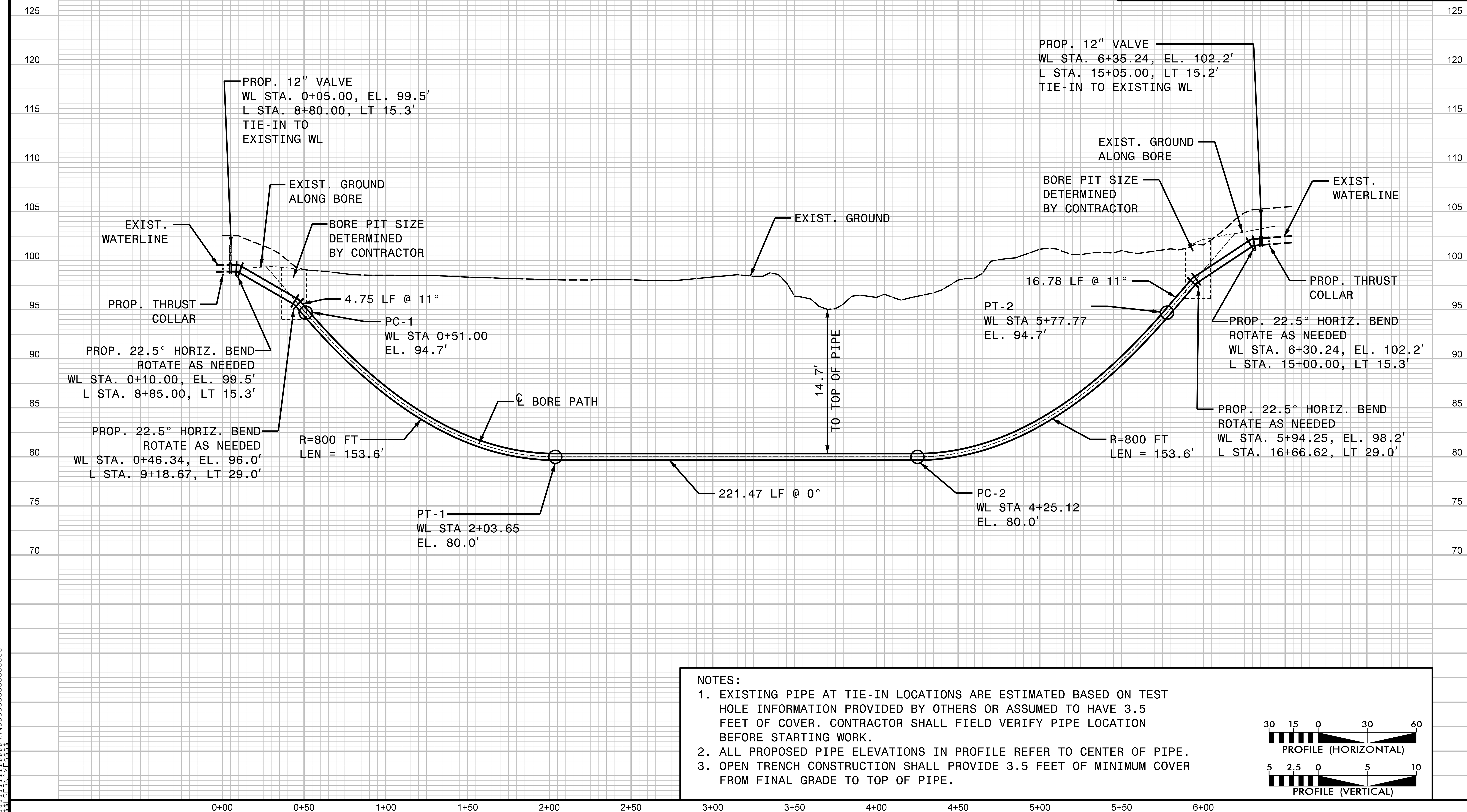

NOTES:
1. EXISTING PIPE AT TIE-IN LOCATIONS ARE ESTIMATED BASED ON TEST HOLE INFORMATION PROVIDED BY OTHERS OR ASSUMED TO HAVE 3.5 FEET OF COVER. CONTRACTOR SHALL FIELD VERIFY PIPE LOCATION BEFORE STARTING WORK.
2. ALL PROPOSED PIPE ELEVATIONS IN PROFILE REFER TO CENTER OF PIPE.
3. OPEN TRENCH CONSTRUCTION SHALL PROVIDE 3.5 FEET OF MINIMUM COVER FROM FINAL GRADE TO TOP OF PIPE.

30 15 0 30 60
PROFILE (HORIZONTAL)

5 2.5 0 5 10
PROFILE (VERTICAL)

5/14/99

$$$$$$SYSTIME$$$$$
$$$$$$$$$$$$$DGN$$$$$$$$$$$$$$$$
$$$$$USERNAME$$$$$

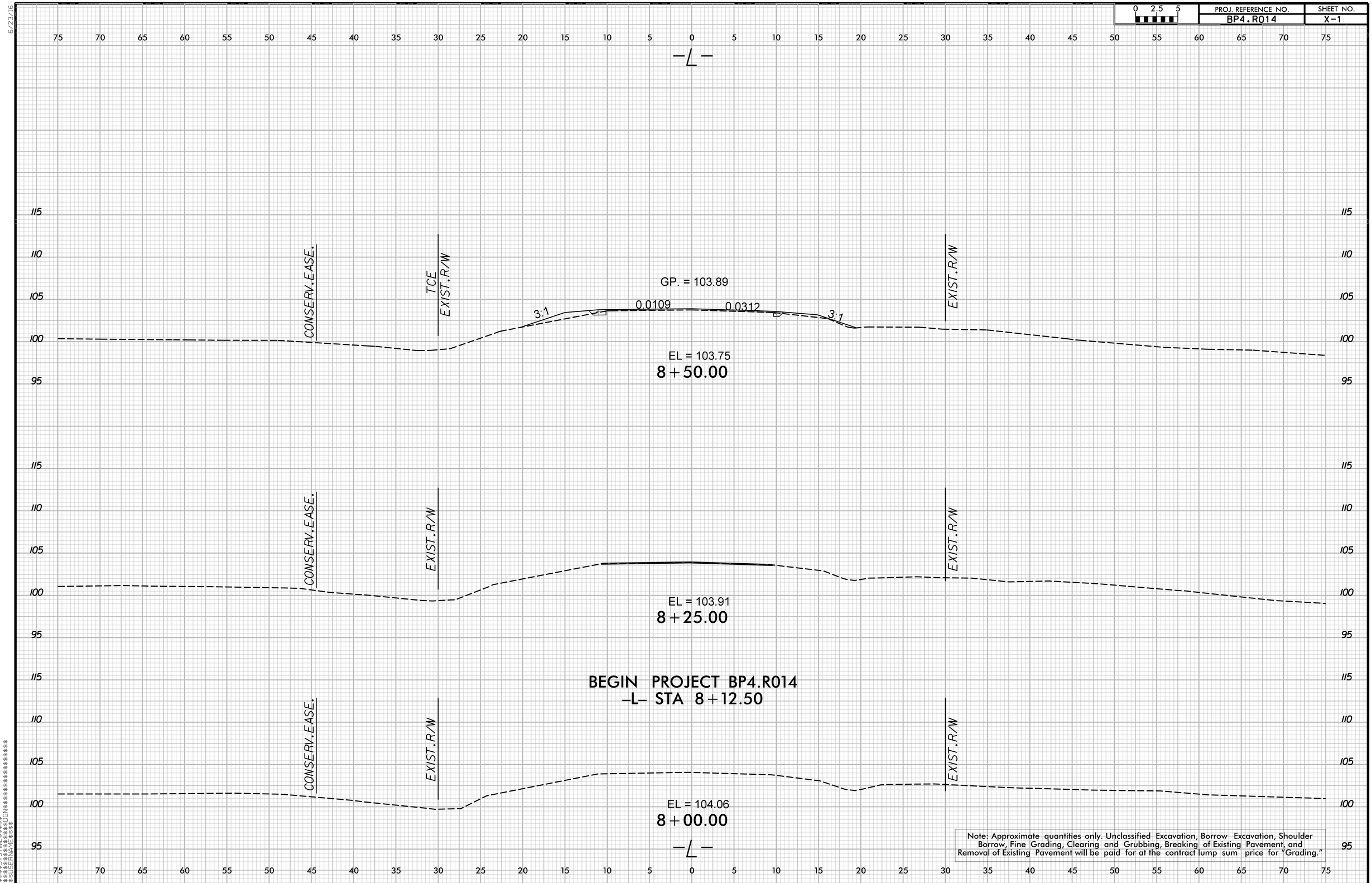

0 2.5 5
PROJ. REFERENCE NO.
BP4.R014
SHEET NO.
X-1
-L-
CONSERV.EASE.
TCE
EXIST.R/W
GP. = 103.89
3:1
0.0109
0.0312
3:1
EXIST.R/W
EL = 103.75
8+50.00
CONSERV.EASE.
EXIST.R/W
EXIST.R/W
EL = 103.91
8+25.00
BEGIN PROJECT BP4.R014
-L- STA 8+12.50
CONSERV.EASE.
EXIST.R/W
EXIST.R/W
EL = 104.06
8+00.00
-L-
Note: Approximate quantities only. Unclassified Excavation, Borrow Excavation, Shoulder Borrow, Fine Grading, Clearing and Grubbing, Breaking of Existing Pavement, and Removal of Existing Pavement will be paid for at the contract lump sum price for "Grading."

6/23/16

0 2.5 5	PROJ. REFERENCE NO.	SHEET NO.
	BP4.R014	X-2

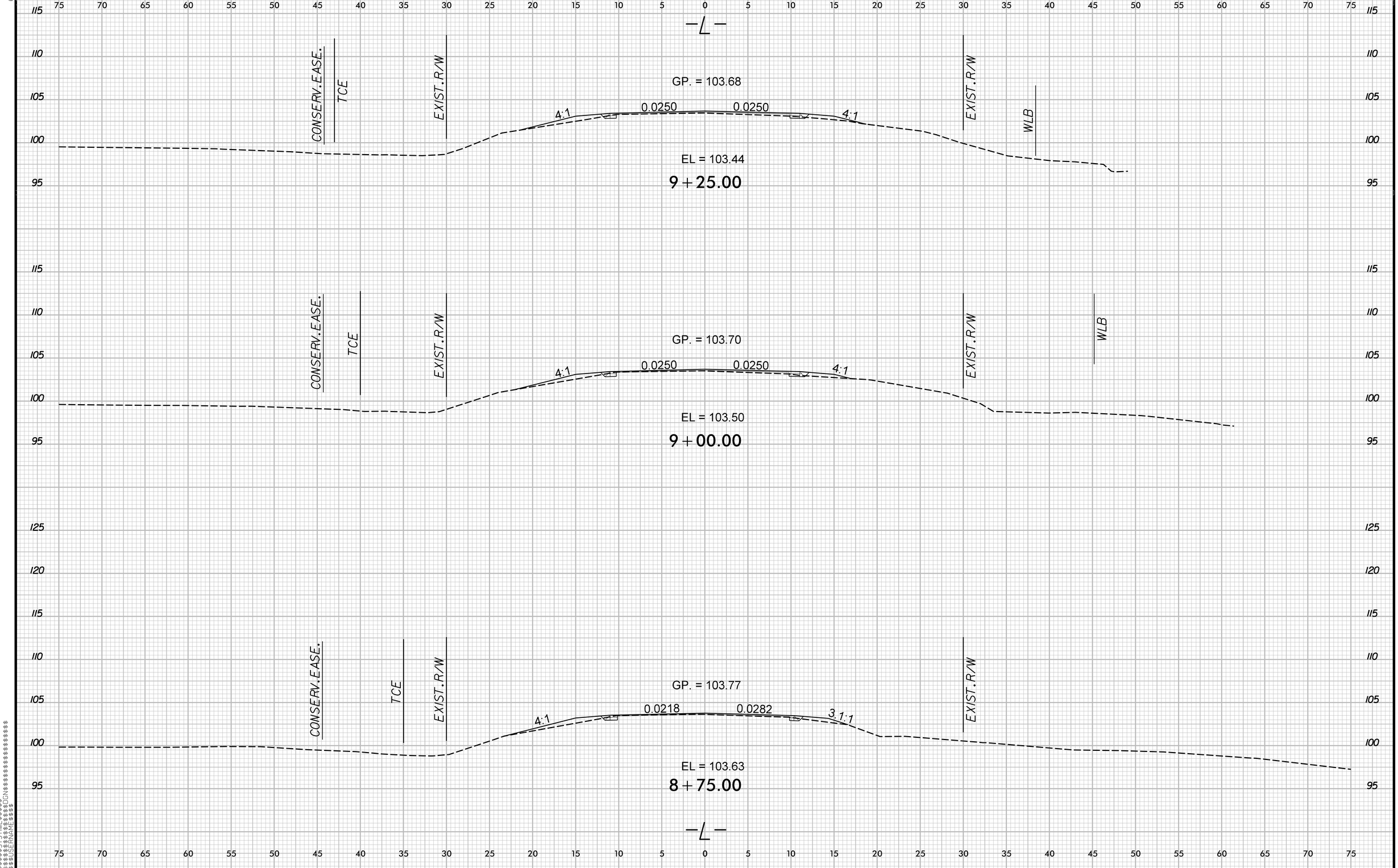

$$$$$$SYSTIME$$$$$$
$$$$$$$$$$$$$$$$DGN$$$$$$$$$$$$$$$$$$
$$$$USERNAME$$$$

6/23/16

0 2.5 5	PROJ. REFERENCE NO.	SHEET NO.
	BP4.R014	X-3

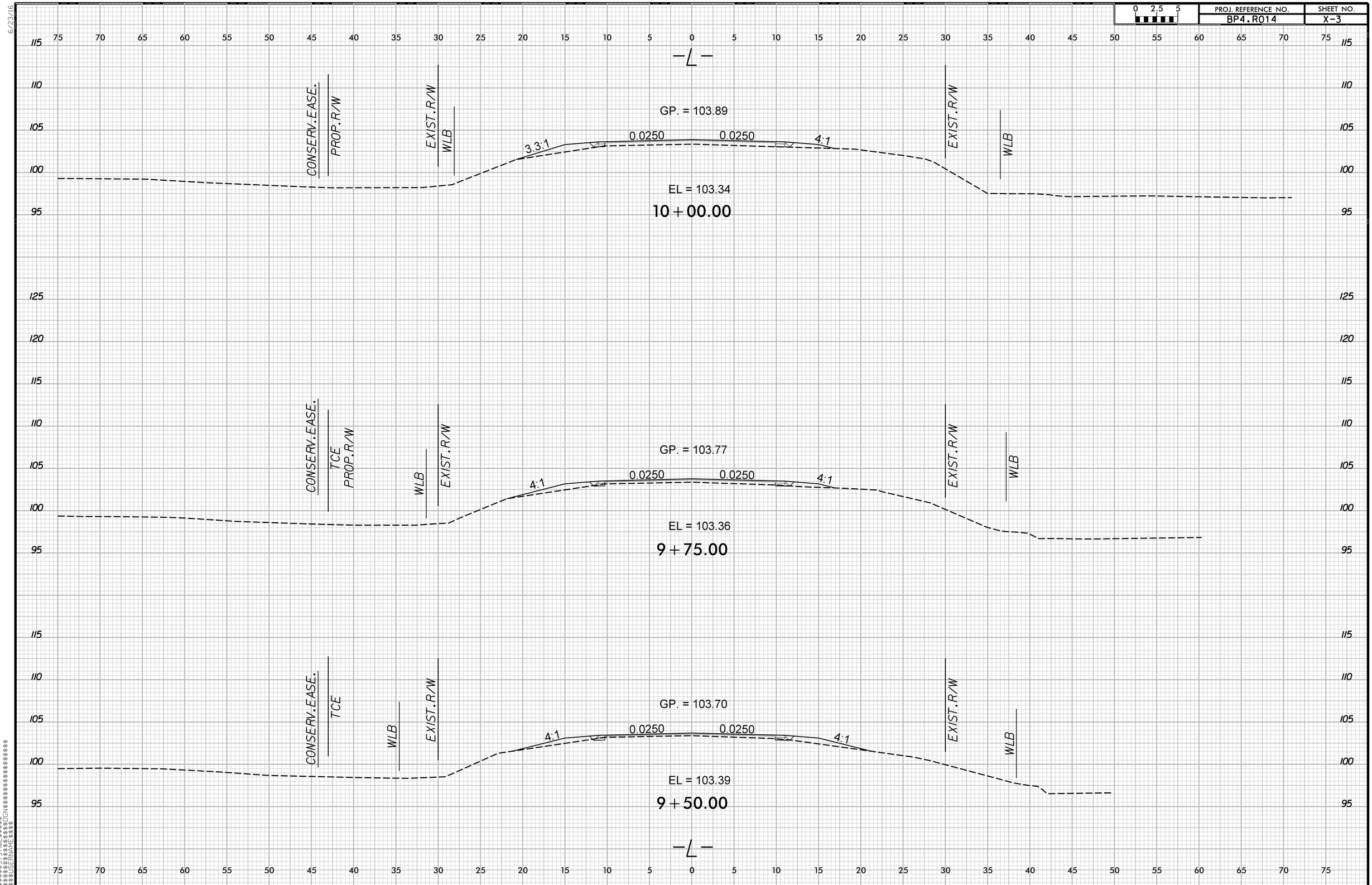

$$$$$$$SYSTIME$$$$$$
$$$$$$$$$$$$$$DGN$$$$$$$$$$$$$$$$$$$$
$$$$$USERNAME$$$$

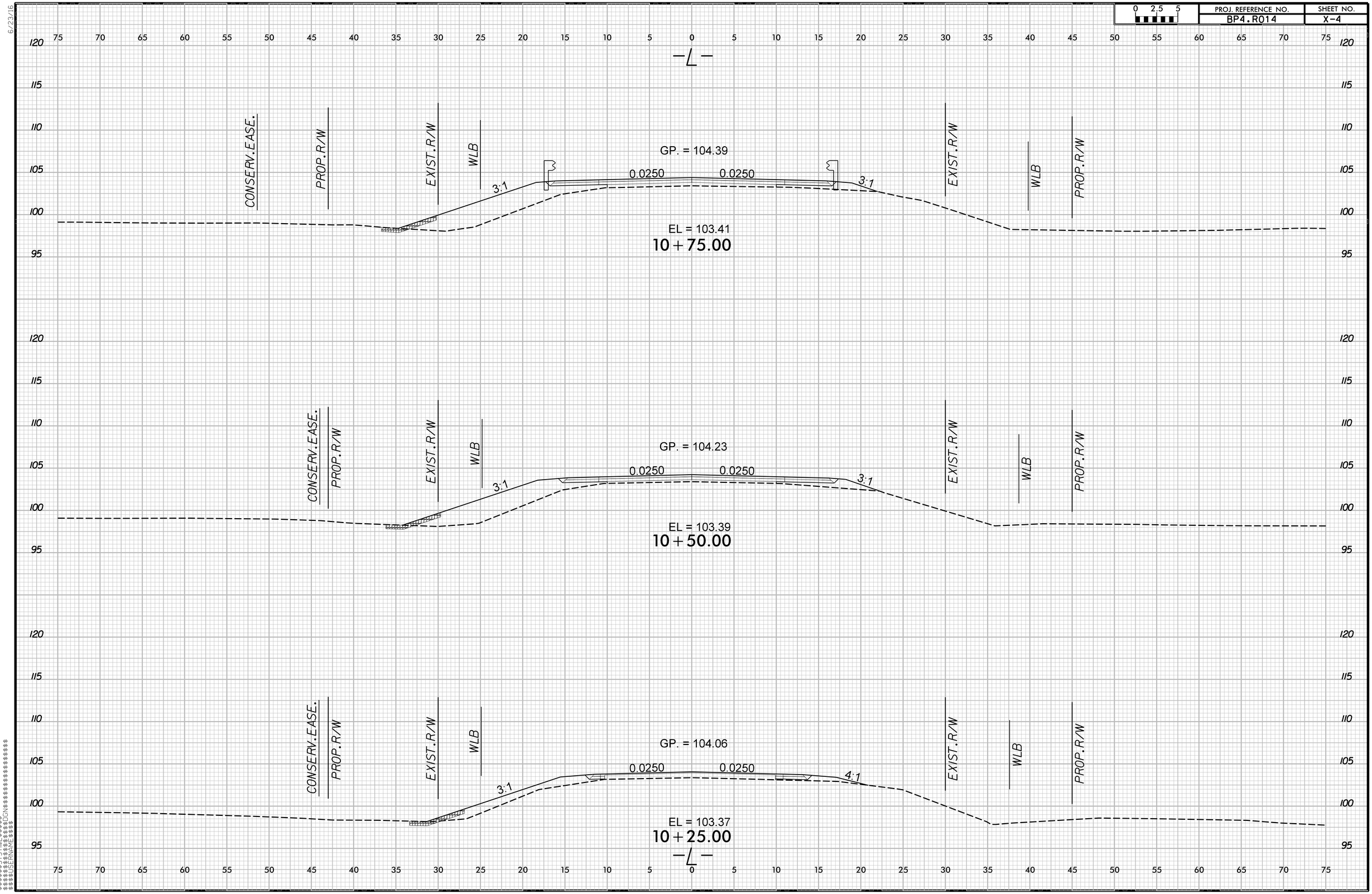

PROJ. REFERENCE NO.
BP4.R014
SHEET NO.
X-4
0 2.5 5
-L-
CONSERV.EASE.
PROP.R/W
EXIST.R/W
WLB
GP. = 104.39
0.0250
0.0250
3:1
3:1
EL = 103.41
10+75.00
GP. = 104.23
EL = 103.39
10+50.00
GP. = 104.06
4:1
EL = 103.37
10+25.00

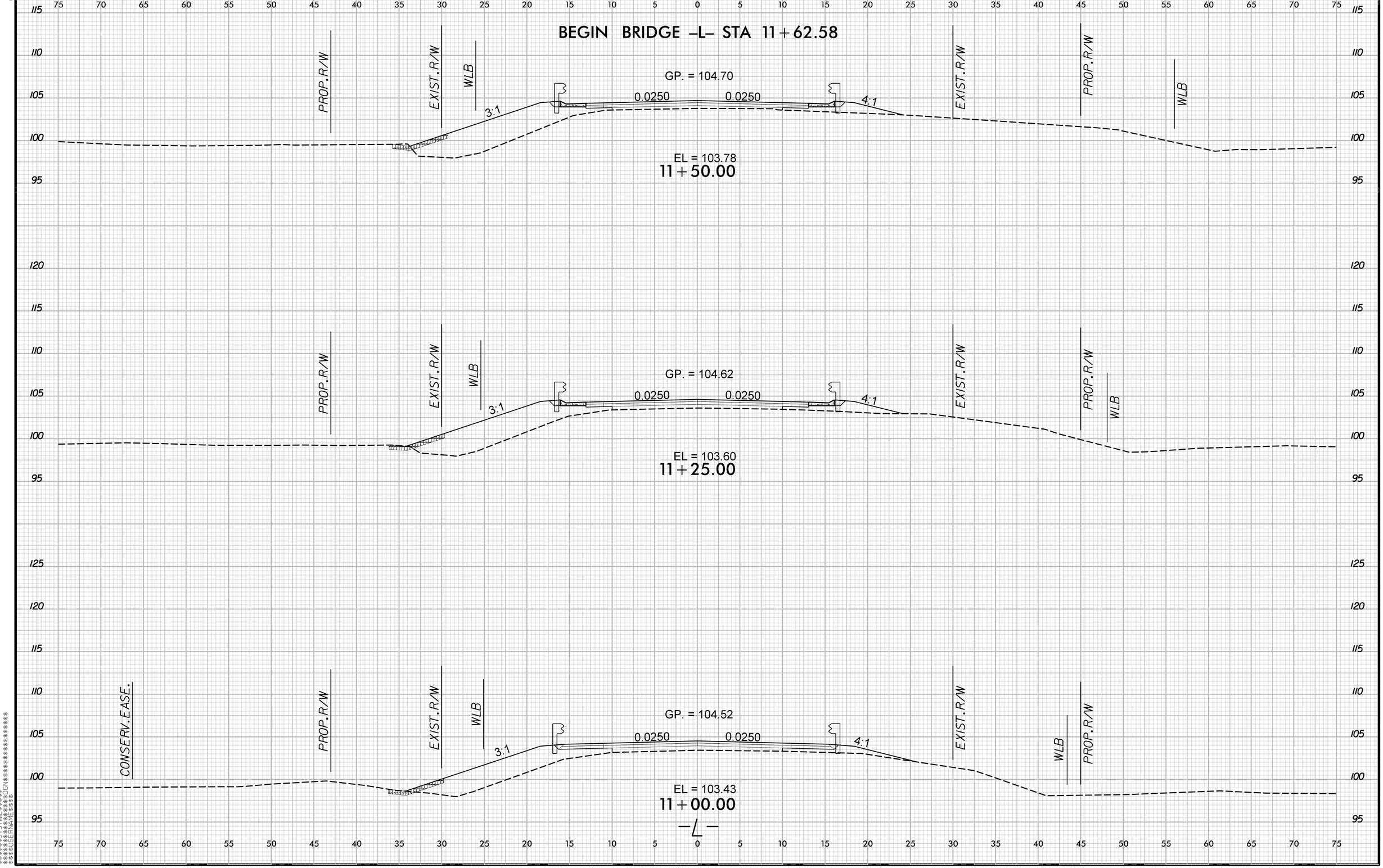

PROJ. REFERENCE NO.
BP4.R014
SHEET NO.
X-5
0 2.5 5
BEGIN BRIDGE -L- STA 11+62.58
GP. = 104.70
0.0250
0.0250
3:1
4:1
PROP.R/W
EXIST.R/W
WLB
EL = 103.78
11+50.00
GP. = 104.62
EL = 103.60
11+25.00
GP. = 104.52
CONSERV.EASE.
EL = 103.43
11+00.00
-L-

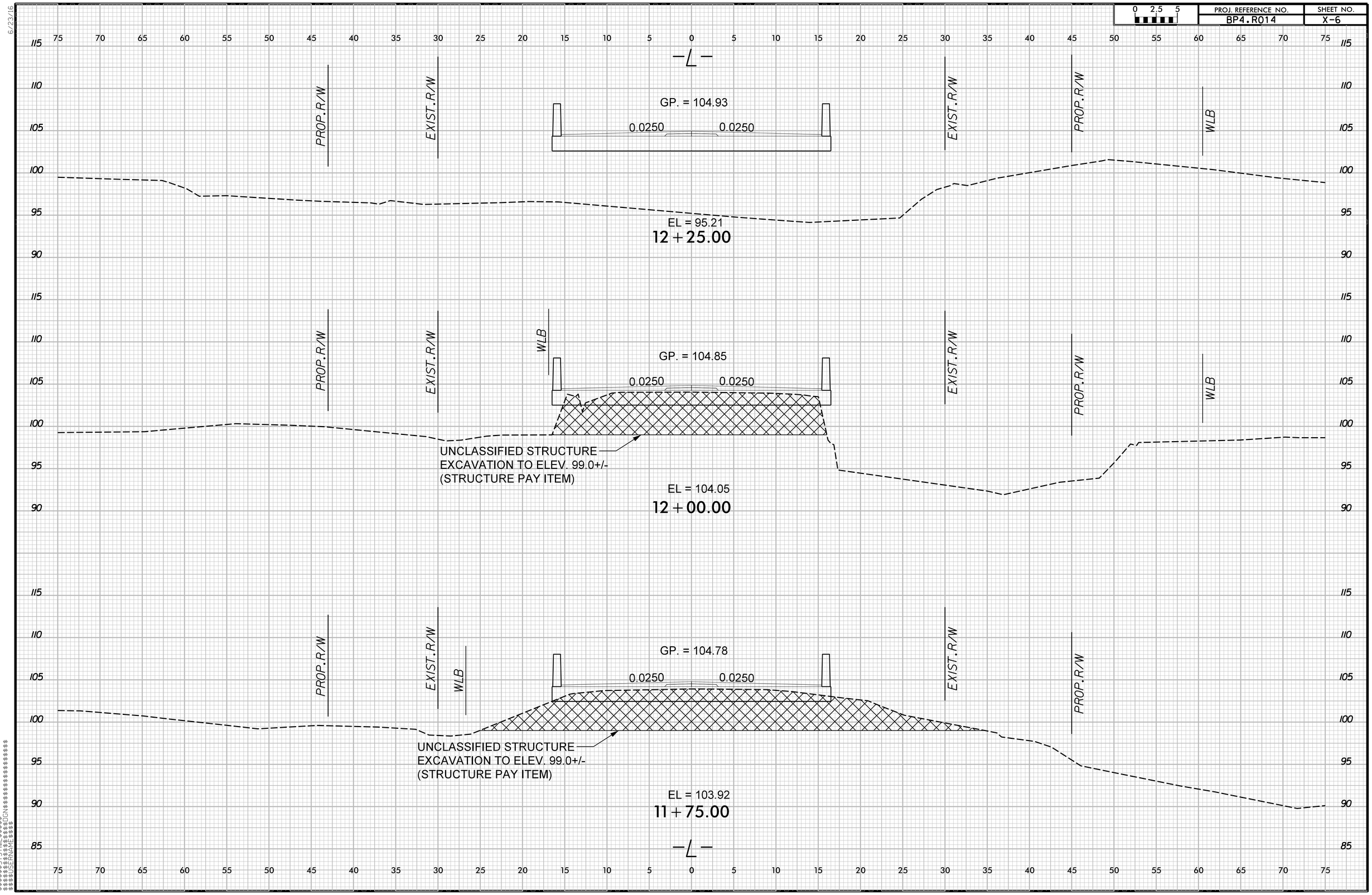

0 2.5 5
PROJ. REFERENCE NO.
BP4.R014
SHEET NO.
X-6
-L-
PROP.R/W
EXIST.R/W
WLB
GP. = 104.93
0.0250
0.0250
EL = 95.21
12+25.00
GP. = 104.85
UNCLASSIFIED STRUCTURE
EXCAVATION TO ELEV. 99.0+/-
(STRUCTURE PAY ITEM)
EL = 104.05
12+00.00
GP. = 104.78
EL = 103.92
11+75.00

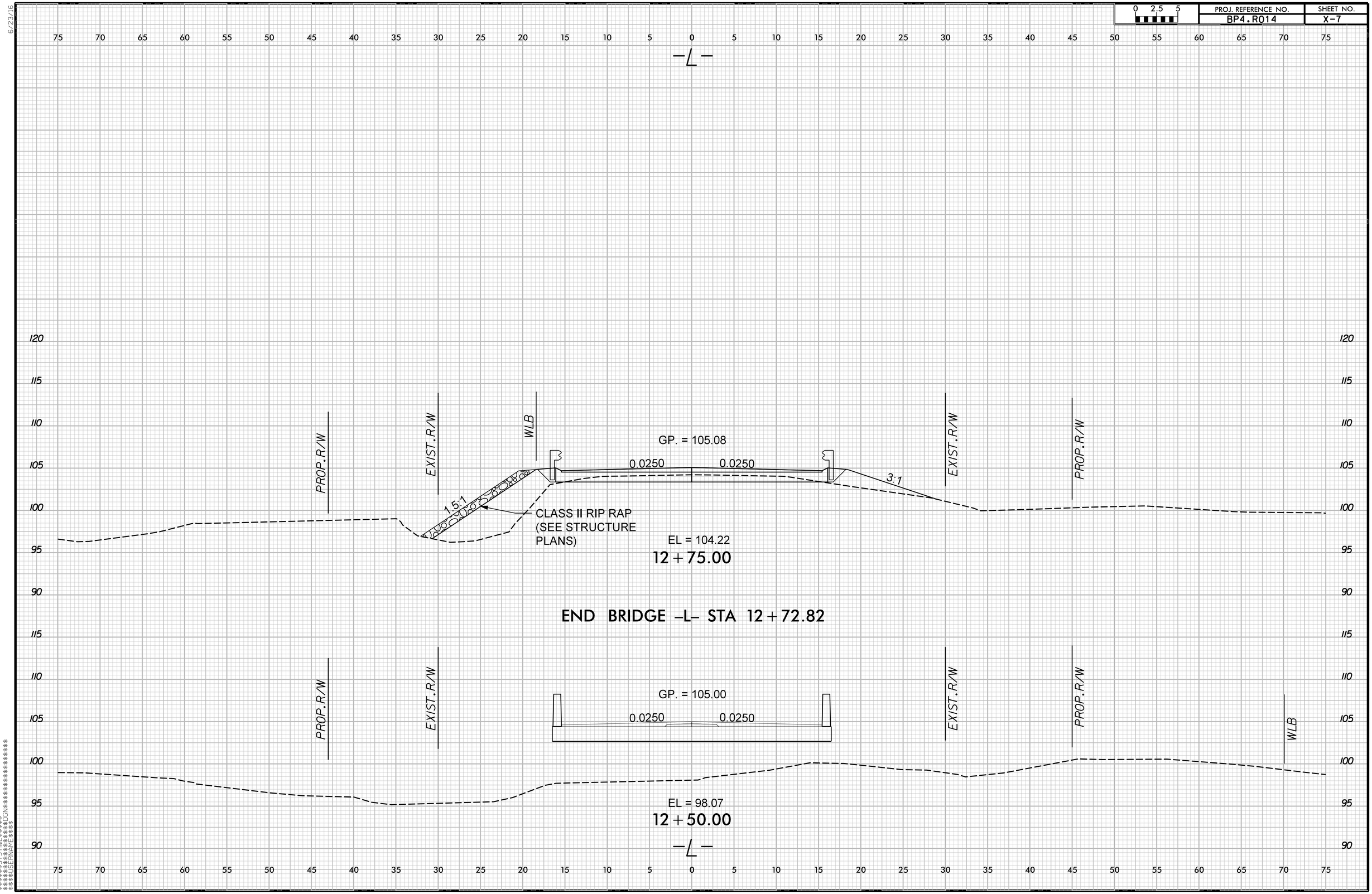

0 2.5 5
PROJ. REFERENCE NO.
BP4.R014
SHEET NO.
X-7
-L-
PROP.R/W
EXIST.R/W
WLB
GP. = 105.08
0.0250
0.0250
1.5:1
3:1
CLASS II RIP RAP
(SEE STRUCTURE
PLANS)
EL = 104.22
12+75.00
END BRIDGE -L- STA 12+72.82
GP. = 105.00
0.0250
0.0250
EL = 98.07
12+50.00
-L-

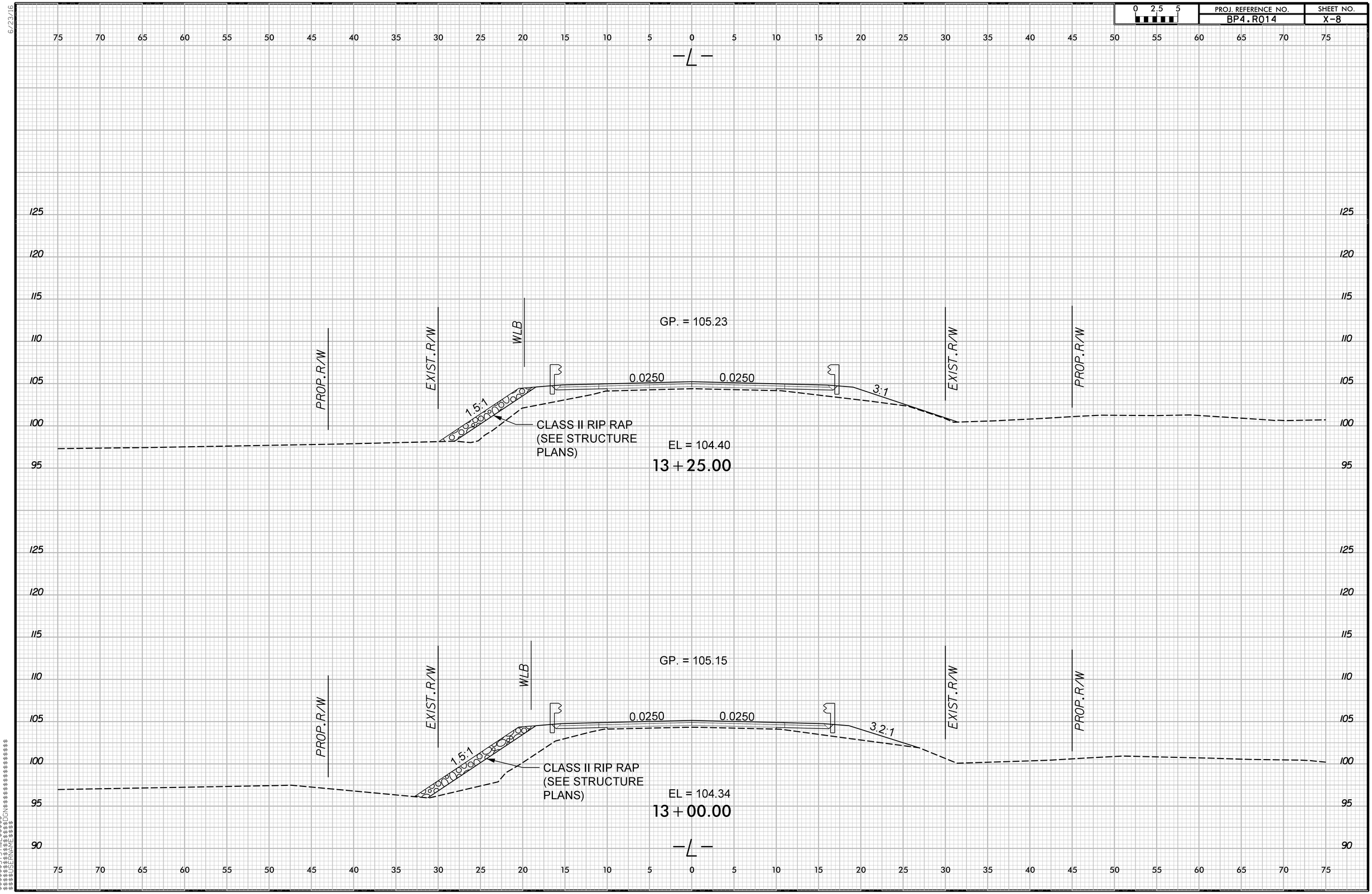

PROJ. REFERENCE NO.
BP4.R014
SHEET NO.
X-8
0 2.5 5
-L-
GP. = 105.23
PROP.R/W
EXIST.R/W
WLB
0.0250
0.0250
1.5:1
3:1
CLASS II RIP RAP
(SEE STRUCTURE
PLANS)
EL = 104.40
13+25.00
GP. = 105.15
PROP.R/W
EXIST.R/W
WLB
0.0250
0.0250
1.5:1
3.2:1
CLASS II RIP RAP
(SEE STRUCTURE
PLANS)
EL = 104.34
13+00.00
-L-

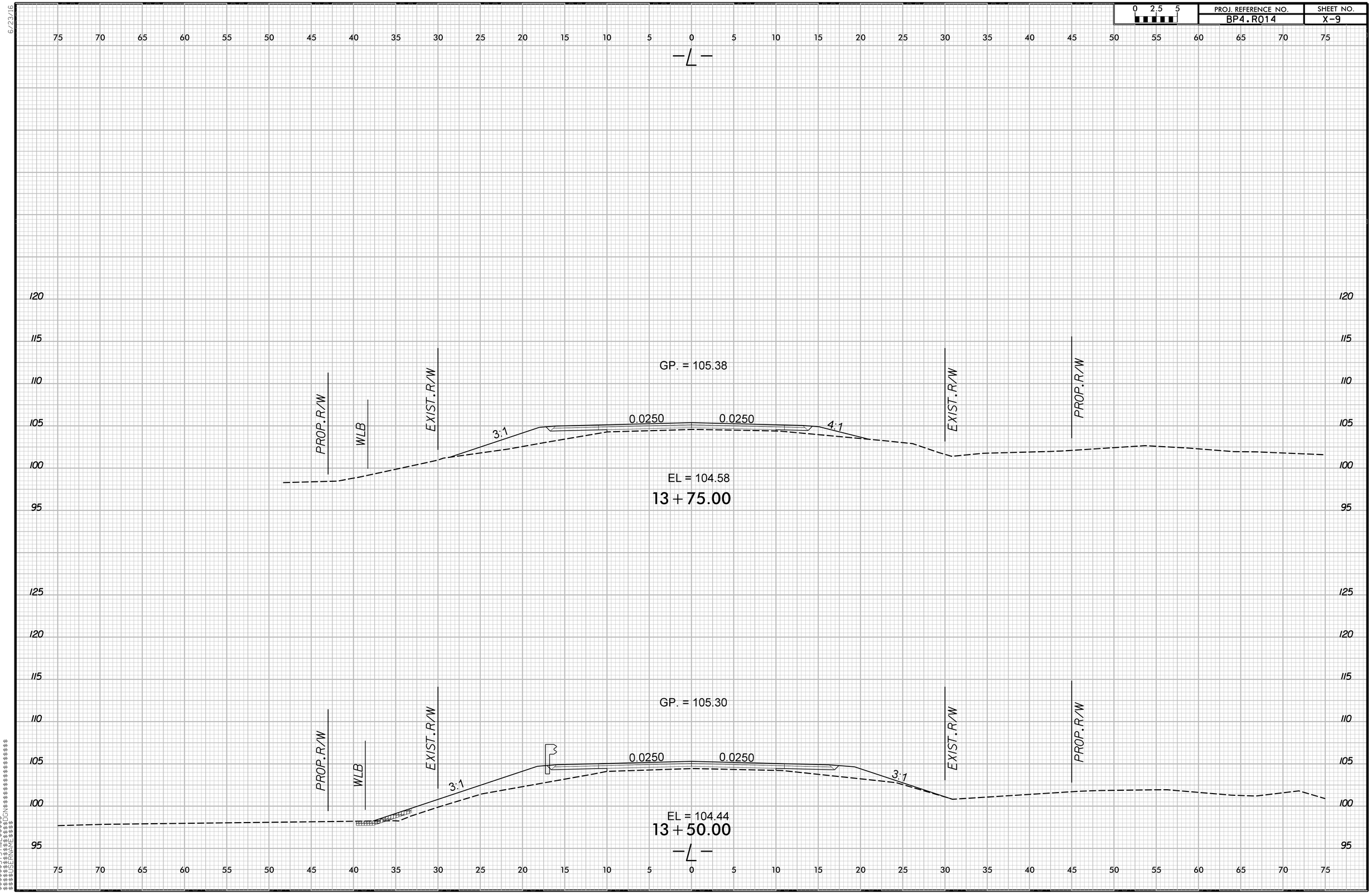

0 2.5 5
PROJ. REFERENCE NO.
BP4.R014
SHEET NO.
X-9
-L-
GP. = 105.38
PROP.R/W
WLB
EXIST.R/W
3:1
0.0250
0.0250
4:1
EXIST.R/W
PROP.R/W
EL = 104.58
13+75.00
GP. = 105.30
PROP.R/W
WLB
EXIST.R/W
3:1
0.0250
0.0250
3:1
EXIST.R/W
PROP.R/W
EL = 104.44
13+50.00
-L-

6/23/16

0 2.5 5	PROJ. REFERENCE NO.	SHEET NO.
	BP4.R014	X-10

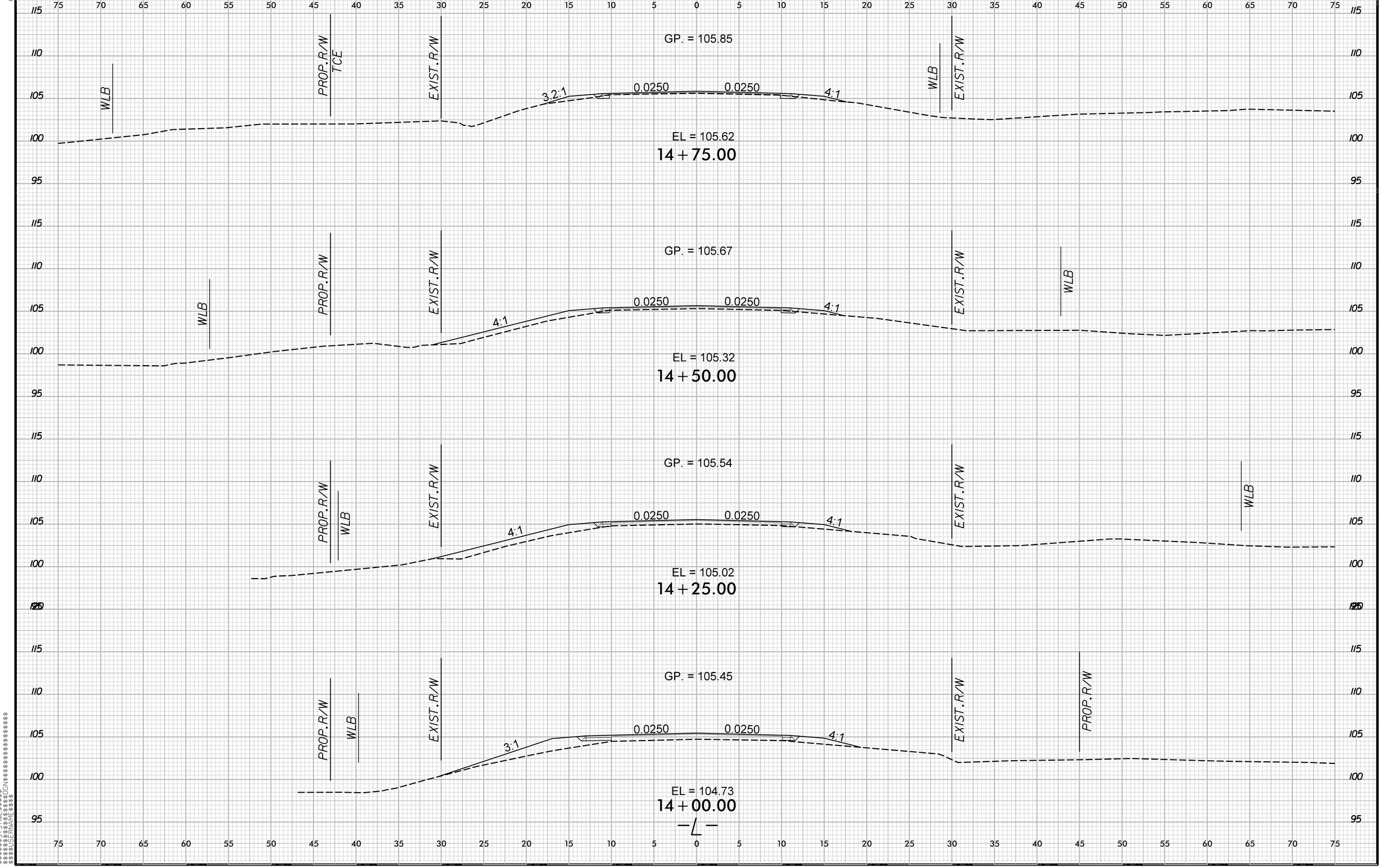

$$$$$$SYSTIME$$$$$$
$$$$$$$$$$$$$$DGN$$$$$$$$$$$$$$$$$$
$$$$USERNAME$$$$

6/23/16

0 2.5 5	PROJ. REFERENCE NO.	SHEET NO.
	BP4.R014	X-11

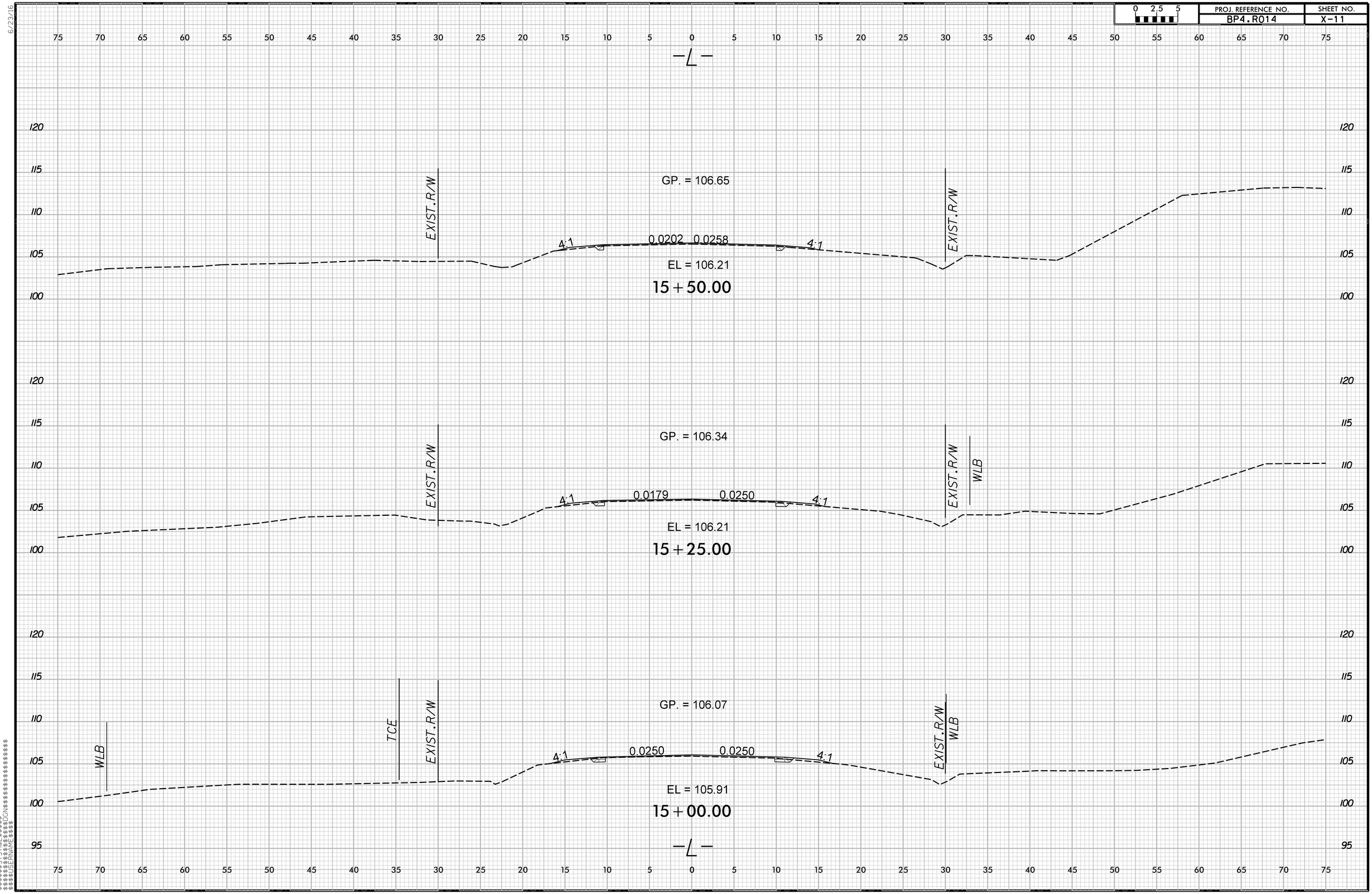

$$$$$$$SYSTIME$$$$$$
$$$$$$$$$$$$$$$$DGN$$$$$$$$$$$$$$$$$$$$
$$$$$USERNAME$$$$

6/23/16

0 2.5 5	PROJ. REFERENCE NO.	SHEET NO.
	BP4.R014	X-12

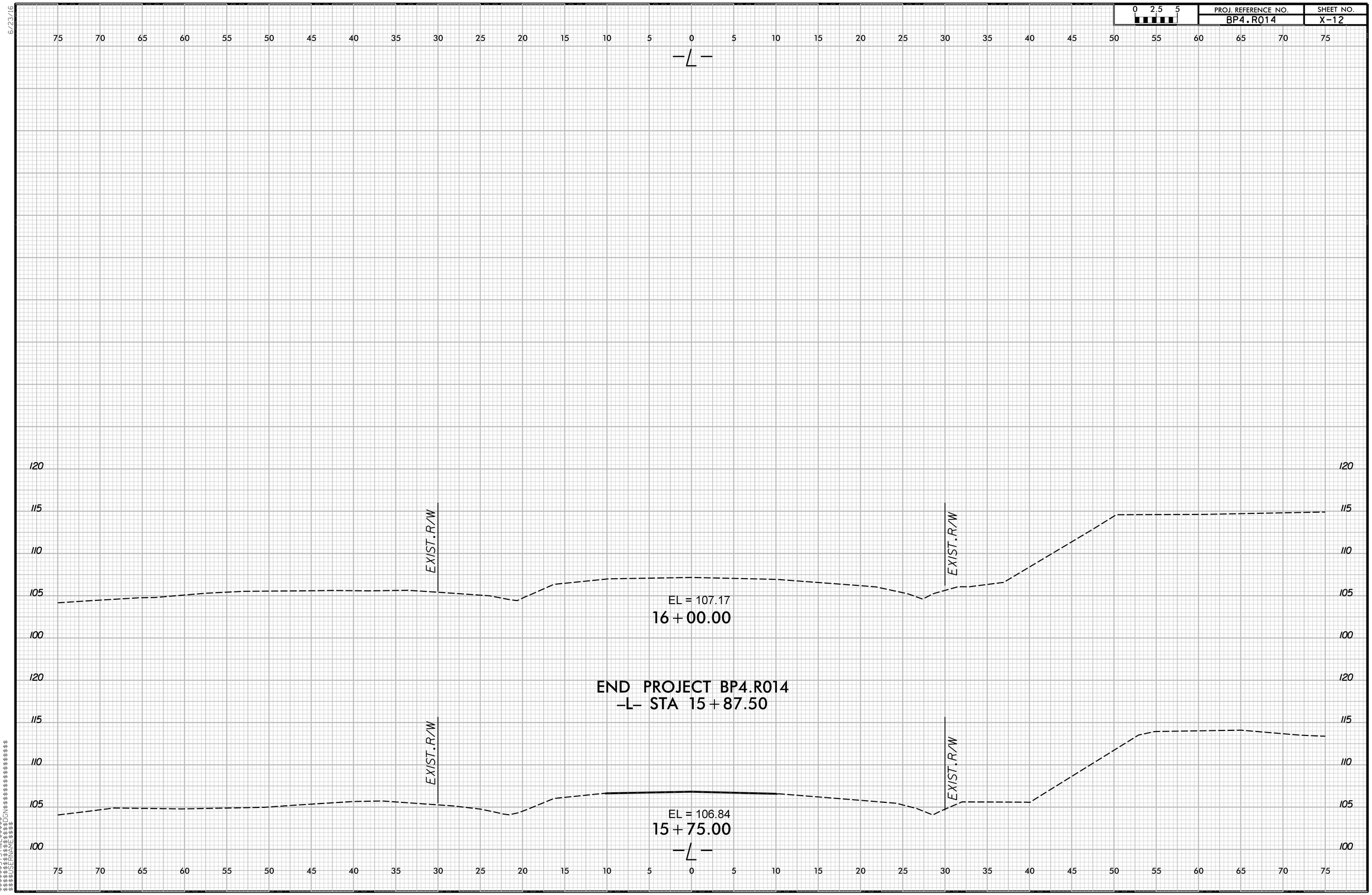

$$$$$$SYSTIME$$$$$$
$$$$$$$$$$$$$$$$DGN$$$$$$$$$$$$$$$$$$$$
$$$$USERNAME$$$$

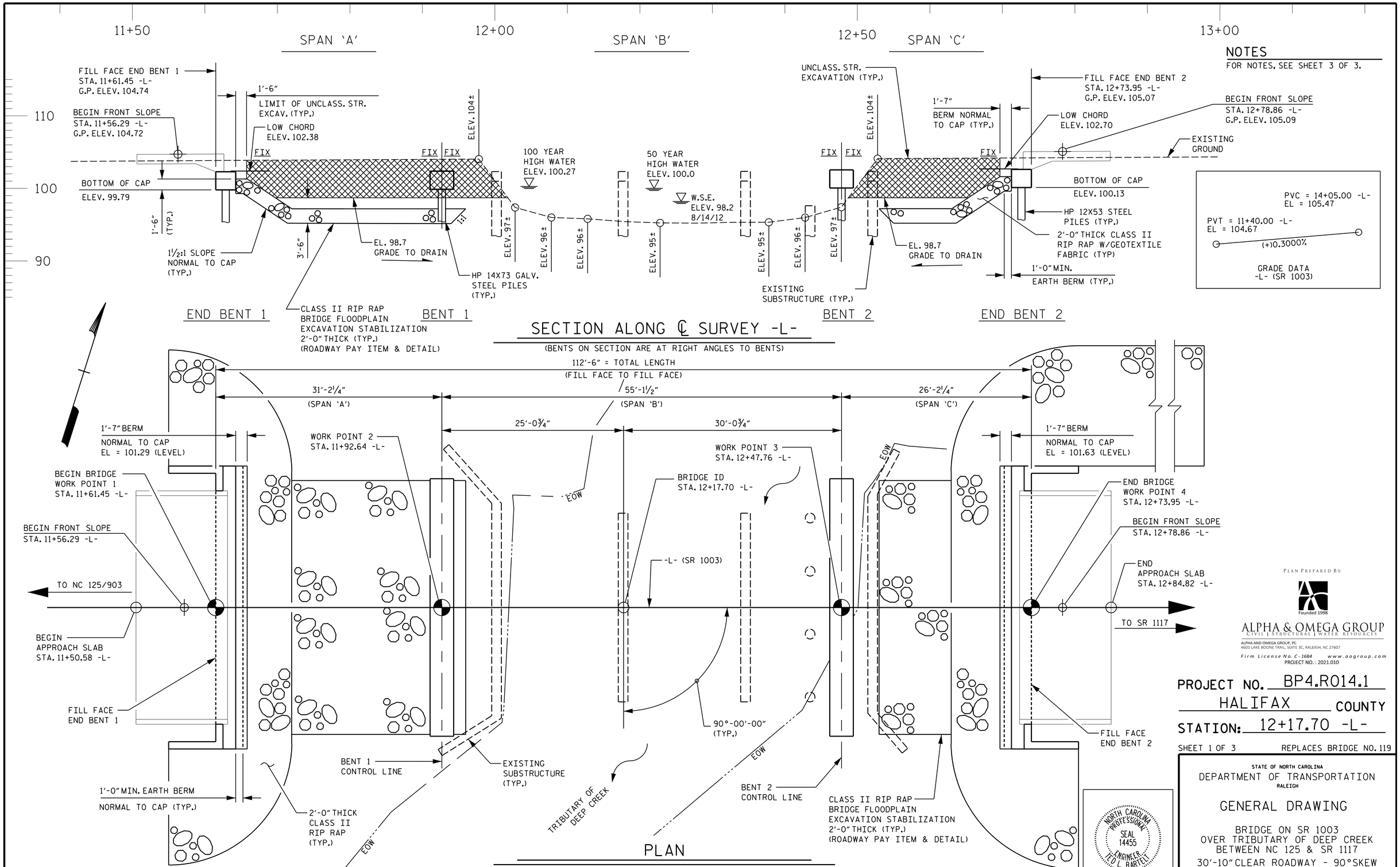

NOTES

FOR NOTES, SEE SHEET 3 OF 3.

SECTION ALONG ℄ SURVEY -L-

(BENTS ON SECTION ARE AT RIGHT ANGLES TO BENTS)

PLAN

(PILES NOT SHOWN FOR CLARITY)

PLAN PREPARED BY:

ALPHA & OMEGA GROUP
CIVIL | STRUCTURAL | WATER RESOURCES

ALPHA AND OMEGA GROUP, PC
4601 LAKE BOONE TRAIL, SUITE 3C, RALEIGH, NC 27607
Firm License No. C-1684 www.aogroup.com
PROJECT NO. : 2021.010

PROJECT NO. BP4.R014.1

HALIFAX COUNTY

STATION: 12+17.70 -L-

SHEET 1 OF 3 REPLACES BRIDGE NO. 119

STATE OF NORTH CAROLINA
DEPARTMENT OF TRANSPORTATION
RALEIGH

GENERAL DRAWING

BRIDGE ON SR 1003
OVER TRIBUTARY OF DEEP CREEK
BETWEEN NC 125 & SR 1117
30'-10" CLEAR ROADWAY - 90° SKEW

NORTH CAROLINA PROFESSIONAL SEAL 14455 ENGINEER TED L. BARTELT

DOCUMENT NOT CONSIDERED FINAL UNLESS ALL SIGNATURES COMPLETED

REVISIONS							SHEET NO.
NO.	BY:	DATE:	NO.	BY:	DATE:		S-1
1			3				TOTAL SHEETS
2			4				26

DRAWN BY : D. M. SHAUT 12-23-21
CHECKED BY : T. G. ZEBLO 12-23-21
ENGINEER OF RECORD : TED L. BARTELT

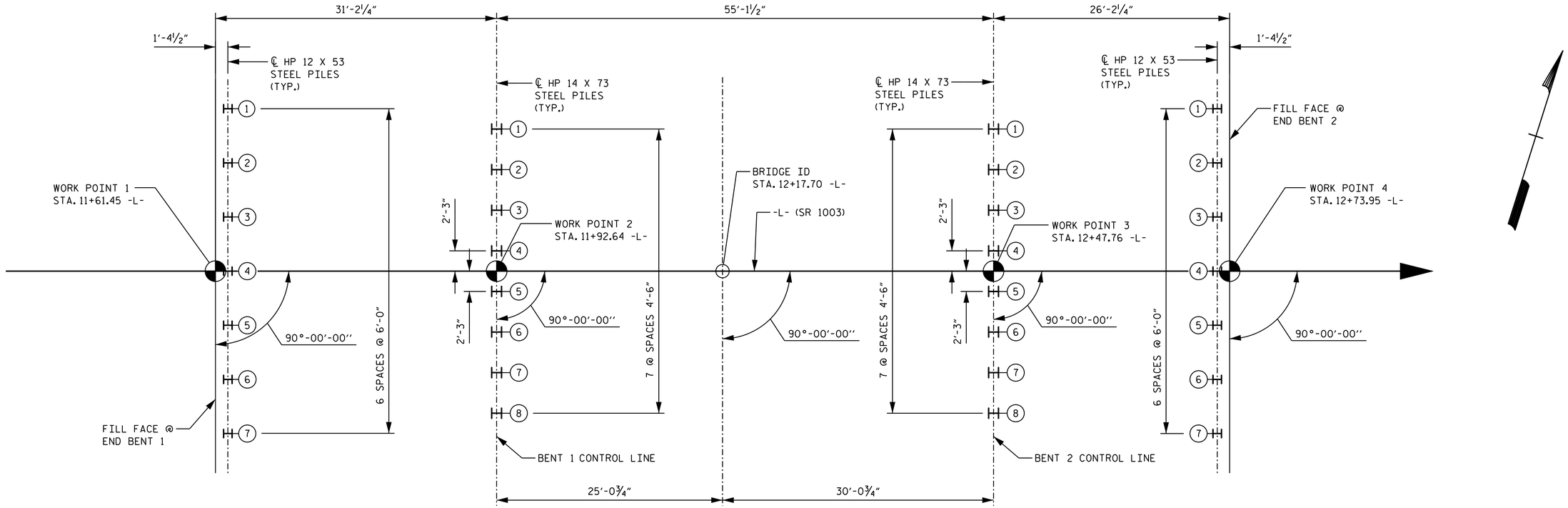

FOUNDATION LAYOUT PLAN

(NOTE: ALL PILES ARE VERTICAL)

NOTES

FOR PILES, SEE SECTION 450 OF THE STANDARD SPECIFICATIONS.

PILES AT END BENT NO. 1 ARE DESIGNED FOR A FACTORED RESISTANCE OF 55 TONS PER PILE.

DRIVE PILES AT END BENT NO. 1 TO A REQUIRED DRIVING RESISTANCE OF 75 TONS PER PILE.

PILES AT BENT NO. 1 AND BENT NO. 2 ARE DESIGNED FOR A FACTORED RESISTANCE OF 100 TONS PER PILE.

DRIVE PILES AT BENT NO. 1 AND BENT NO. 2 TO A REQUIRED DRIVING RESISTANCE OF 144 TONS PER PILE. THIS REQUIRED DRIVING RESISTANCE INCLUDES ADDITIONAL RESISTANCE FOR DOWNDRAG OR SCOUR.

PILES AT END BENT NO. 2 ARE DESIGNED FOR A FACTORED RESISTANCE OF 50 TONS PER PILE.

DRIVE PILES AT END BENT NO. 2 TO A REQUIRED DRIVING RESISTANCE OF 70 TONS PER PILE.

INSTALL PILES AT BENT NO. 1 AND BENT NO. 2 TO A TIP ELEVATION NO HIGHER THAN 68.0 FT.

THE SCOUR CRITICAL ELEVATION FOR BENT NO. 1 AND BENT NO. 2 IS ELEVATION 90.0 FT. SCOUR CRITICAL ELEVATIONS ARE USED TO MONITOR POSSIBLE SCOUR PROBLEMS DURING THE LIFE OF THE STRUCTURE.

THE DESIGN SCOUR ELEVATION FOR BENT NO. 1 IS 97.0 FT.

THE DESIGN SCOUR ELEVATION FOR BENT NO. 2 IS 96.0 FT.

IT HAS BEEN ESTIMATED THAT A HAMMER WITH AN EQUIVALENT RATED ENERGY IN THE RANGE OF 25 TO 35 FT-KIPS PER BLOW WILL BE REQUIRED TO DRIVE PILES AT END BENT NO. 1 AND END BENT NO. 2. THIS ESTIMATED ENERGY RANGE DOES NOT RELEASE THE CONTRACTOR FROM PROVIDING DRIVING EQUIPMENT IN ACCORDANCE WITH SUBARTICLE 450-3(D)(2) OF THE STANDARD SPECIFICATIONS.

IT HAS BEEN ESTIMATED THAT A HAMMER WITH AN EQUIVALENT RATED ENERGY IN THE RANGE OF 30 TO 45 FT-KIPS PER BLOW WILL BE REQUIRED TO DRIVE PILES AT BENT NO. 1 AND BENT NO. 2. THIS ESTIMATED ENERGY RANGE DOES NOT RELEASE THE CONTRACTOR FROM PROVIDING DRIVING EQUIPMENT IN ACCORDANCE WITH SUBARTICLE 450-3(D)(2) OF THE STANDARD SPECIFICATIONS.

TESTING PILES WITH THE PDA DURING DRIVING, RESTRIKING OR REDRIVING IS REQUIRED. TEST THE FIRST PRODUCTION PILE DRIVEN IN END BENT AND TEST THE FIRST PRODUCTION PILE DRIVEN IN INTERIOR BENT (TWO TOTAL). FOR PDA TESTING, SEE SECTION 450 OF THE STANDARD SPECIFICATIONS AND FOR PILE DRIVING CRITERIA, SEE PILE DRIVING CRITERIA PROVISION.

NO WAITING PERIOD IS REQUIRED BEFORE BEGINNING ANY WORK FOR END BENT CONSTRUCTION AFTER COMPLETION OF THE EMBANKMENT AT EACH END BENT.

THE REQUIRED DRIVING RESISTANCE AT END BENT NO. 1, END BENT NO. 2, BENT NO. 1, AND BENT NO. 2 IS BASED ON USING A RESISTANCE FACTOR OF 0.75 WITH SUCCESSFUL COMPLETION OF TWO PDA TESTINGS.

NORTH CAROLINA PROFESSIONAL SEAL 14455 ENGINEER TED L. BARTELT

DOCUMENT NOT CONSIDERED FINAL UNLESS ALL SIGNATURES COMPLETED

PLAN PREPARED BY:

ALPHA & OMEGA GROUP
CIVIL | STRUCTURAL | WATER RESOURCES
ALPHA AND OMEGA GROUP, PC
4601 LAKE BOONE TRAIL, SUITE 3C, RALEIGH, NC 27607
Firm License No. C-1684 www.aogroup.com
PROJECT NO. : 2021.010

PROJECT NO. BP4.R014.1
HALIFAX COUNTY
STATION: 12+17.70 -L-

SHEET 2 OF 3

STATE OF NORTH CAROLINA
DEPARTMENT OF TRANSPORTATION
RALEIGH

GENERAL DRAWING

BRIDGE ON SR 1003
OVER TRIBUTARY OF DEEP CREEK
BETWEEN NC 125 & SR 1117
30'-10" CLEAR ROADWAY - 90° SKEW

REVISIONS						SHEET NO.
NO.	BY:	DATE:	NO.	BY:	DATE:	S-2
1			3			TOTAL SHEETS
2			4			26

DRAWN BY : D. M. SHAUT 12-23-21
CHECKED BY : T. G. ZEBLO 12-23-21
ENGINEER OF RECORD : TED L. BARTELT

TBM A: RR SPIKE IN BASE OF 30' GUM STA. 13+17.25 -L- 35.82' RT = STA. 16+43.00 -BL- OFFSET 17' RT ELEV. = 102.61

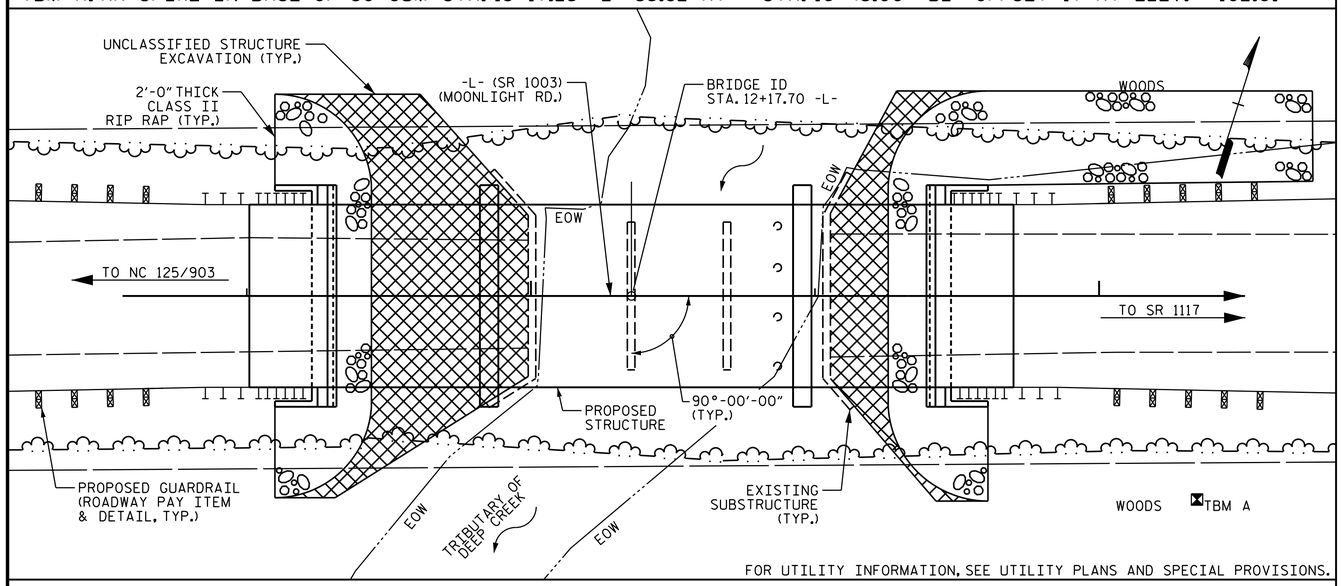

FOR UTILITY INFORMATION, SEE UTILITY PLANS AND SPECIAL PROVISIONS.

LOCATION SKETCH

NOTES

ASSUMED LIVE LOAD = HL-93 OR ALTERNATE LOADING.

THIS BRIDGE HAS BEEN DESIGNED IN ACCORDANCE WITH THE AASHTO LRFD BRIDGE DESIGN SPECIFICATIONS

THIS BRIDGE IS LOCATED IN SEISMIC ZONE 1.

FOR OTHER DESIGN DATA AND GENERAL NOTES, SEE SHEET SN.

FOR SUBMITTAL OF WORKING DRAWINGS, SEE SPECIAL PROVISIONS.

FOR EROSION CONTROL MEASURES, SEE EROSION CONTROL PLANS.

DECK DRAINS ARE NOT REQUIRED.

FOR FALSEWORK AND FORMWORK, SEE SPECIAL PROVISIONS.

FOR FOUNDATION NOTES, SEE SHEET 2 OF 3.

ASPHALT WEARING SURFACE IS INCLUDED IN ROADWAY QUANTITY ON ROADWAY PLANS.

FOR CRANE SAFETY, SEE SPECIAL PROVISIONS.

FOR GROUT OF STRUCTURES, SEE SPECIAL PROVISIONS.

THE SUBSTRUCTURE OF THE EXISTING BRIDGE INDICATED ON THE PLANS IS FROM THE BEST INFORMATION AVAILABLE. THIS INFORMATION IS SHOWN FOR THE CONVENIENCE OF THE CONTRACTOR. THE CONTRACTOR SHALL HAVE NO CLAIM WHATSOEVER AGAINST THE DEPARTMENT OF TRANSPORTATION FOR ANY DELAYS OR ADDITIONAL COST INCURRED BASED ON DIFFERENCES BETWEEN THE EXISTING BRIDGE SUBSTRUCTURE SHOWN ON THE PLANS AND THE ACTUAL CONDITIONS ON THE PROJECT SITE.

THIS STRUCTURE HAS BEEN DESIGNED IN ACCORDANCE WITH "HEC 18 - EVALUATING SCOUR AT BRIDGES."

FOR ASBESTOS ASSESSMENT FOR BRIDGE DEMOLITION AND RENOVATION ACTIVITIES, SEE SPECIAL PROVISIONS.

TOTAL BILL OF MATERIAL

	REMOVAL OF EXISTING STRUCTURE AT STA. 12+17.70 -L-	ASBESTOS ASSESSMENT	PDA TESTING	UNCLASSIFIED STRUCTURE EXCAVATION	CLASS A CONCRETE	BRIDGE APPROACH SLABS	REINFORCING STEEL	PILE DRIVING EQUIPMENT SETUP FOR HP12X53 STEEL PILES
	LUMP SUM	LUMP SUM	EACH	LUMP SUM	CU.YDS.	LUMP SUM	LBS.	EACH
SUPERSTRUCTURE						LUMP SUM		
END BENT NO.1				LUMP SUM	14.2		2115	7
BENT NO.1					10.7		2136	
BENT NO.2					10.7		2136	
END BENT NO.2				LUMP SUM	14.2		2115	7
TOTAL	LUMP SUM	LUMP SUM	2	LUMP SUM	49.8	LUMP SUM	8502	14

TOTAL BILL OF MATERIAL

	PILE DRIVING EQUIPMENT SETUP FOR HP14X73 STEEL PILES	HP 12 X 53 STEEL PILES		HP 14 X 73 STEEL PILES		PILE REDRIVES	VERTICAL CONCRETE BARRIER RAIL	RIP RAP CLASS II (2'-0" THICK)	GEOTEXTILE FOR DRAINAGE	ELASTOMERIC BEARINGS	3'-0" X 1'-9" PRESTRESSED CONCRETE CORED SLABS	
	EACH	NO.	LIN.FT.	NO.	LIN.FT.	EACH	LIN. FT.	TONS	SQ.YDS.	LUMP SUM	NO.	LIN.FT.
SUPERSTRUCTURE							220.75			LUMP SUM	33	1210
END BENT NO.1		7	455			4		55	61			
BENT NO.1	8			8	640	4						
BENT NO.2	8			8	640	4						
END BENT NO.2		7	455			4		163	181			
TOTAL	16	14	910	16	1280	16	220.75	218	242	LUMP SUM	33	1210

NOTES

THE MATERIAL SHOWN IN THE CROSS-HATCHED AREA SHALL BE EXCAVATED FOR A DISTANCE OF 36± FT. EACH SIDE OF CENTERLINE ROADWAY AS DIRECTED BY THE ENGINEER. THIS WORK WILL BE PAID FOR AT THE CONTRACT LUMP SUM PRICE FOR UNCLASSIFIED STRUCTURE EXCAVATION. SEE SECTION 412 OF THE STANDARD SPECIFICATIONS.

THE EXISTING STRUCTURE CONSISTING OF TWO SIMPLE SPANS AT 17.75 FT. AND ONE SIMPLE SPAN AT 16.86 FT. WITH A 24.1 FT. CLEAR ROADWAY WIDTH AND REINFORCED CONCRETE DECKON TIMBER JOISTS SUPPORTED ON TIMBER CAPS AND TIMBER PILES SHALL BE REMOVED. THE EXISTING BRIDGE IS PRESENTLY POSTED FOR LOAD LIMIT.

REMOVAL OF THE EXISTING BRIDGE SHALL BE PERFORMED IN A MANNER THAT PREVENTS DEBRIS FROM FALLING INTO THE WATER. THE CONTRACTOR SHALL SUBMIT DEMOLITION PLANS FOR REVIEW AND REMOVE THE BRIDGE IN ACCORDANCE WITH ARTICLE 402-2 OF THE STANDARD SPECIFICATIONS.

FOR INTERIOR BENT 1 AND INTERIOR BENT 2, ONLY PARTIAL GALVANIZING OF THE PILES IS REQUIRED. SEE INTERIOR BENT SHEETS FOR REQUIRED GALVANIZED LENGTHS. PAYMENT FOR PARTIALLY GALVANIZED PILES WILL BE MADE UNDER THE CONTRACT UNIT PRICE FOR GALVANIZED STEEL PILES.

HYDRAULIC DATA:

DESIGN DISCHARGE -	750	CFS
DESIGN FREQUENCY -	50	YRS
DESIGN HW ELEVATION -	100.00	FT
DRAINAGE AREA -	4.6	SQ. MI.
BASE DISCHARGE (Q100) -	950	CFS
BASE HW ELEVATION -	100.27	FT

OVERTOPPING DATA:

OVERTOPPING DISCHARGE -	2950	CFS
OVERTOPPING FREQUENCY -	500	YRS
OVERTOPPING HW ELEVATION -	103.68	FT

LOW POINT OF ROADWAY OVERTOPPING PROFILE OCCURS AT -L- STA. 9+25.04

PROJECT NO. BP4.R014.1

HALIFAX COUNTY

STATION: 12+17.70

SHEET 3 OF 3

STATE OF NORTH CAROLINA
DEPARTMENT OF TRANSPORTATION
RALEIGH

GENERAL DRAWING

BRIDGE ON SR 1003
OVER TRIBUTARY OF DEEP CREEK
BETWEEN NC 125 & SR 1117
30'-10" CLEAR ROADWAY - 90° SKEW

PLAN PREPARED BY:

ALPHA & OMEGA GROUP
CIVIL | STRUCTURAL | WATER RESOURCES
ALPHA AND OMEGA GROUP, PC
4601 LAKE BOONE TRAIL, SUITE 3C, RALEIGH, NC 27607
Firm License No. C-1684 www.aogroup.com
PROJECT NO. : 2021.010

NORTH CAROLINA PROFESSIONAL SEAL 14455 ENGINEER TED L. BARTELT

DOCUMENT NOT CONSIDERED FINAL UNLESS ALL SIGNATURES COMPLETED

REVISIONS								SHEET NO.
NO.	BY:	DATE:	NO.	BY:	DATE:			S-3
1			3					TOTAL SHEETS
2			4					26

DRAWN BY : D. M. SHAUT 12-23-21
CHECKED BY : T. G. ZEBLO 12-23-21
ENGINEER OF RECORD : TED L. BARTELT

$$$$$$SYSTIME$$$$$
$$$$$$$$$$$$$$$$$$$$$$$$DGN$$$$$$$$$$$$$$$$$$$$$$$$
$$$$USERNAME$$$$

LOAD AND RESISTANCE FACTOR RATING (LRFD) SUMMARY FOR PRESTRESSED CONCRETE GIRDERS

LEVEL		VEHICLE	WEIGHT (W) (TONS)	CONTROLLING LOAD RATING	MINIMUM RATING FACTORS (RF)	TONS = W X RF	STRENGTH I LIMIT STATE											SERVICE III LIMIT STATE						COMMENT NUMBER
							LIVELOAD FACTORS	MOMENT					SHEAR					LIVELOAD FACTORS	MOMENT					
								DISTRIBUTION FACTORS (DF)	RATING FACTOR	SPAN	GIRDER LOCATION	DISTANCE FROM LEFT END OF SPAN (ft)	DISTRIBUTION FACTORS (DF)	RATING FACTOR	SPAN	GIRDER LOCATION	DISTANCE FROM LEFT END OF SPAN (ft)		DISTRIBUTION FACTORS (DF)	RATING FACTOR	SPAN	GIRDER LOCATION	DISTANCE FROM LEFT END OF SPAN (ft)	
DESIGN LOAD RATING		HL-93(Inv)	N/A	1	1.037	--	1.75	0.283	1.83	30'	EL	14.5	0.574	1.04	30'	EL	1.45	0.80	0.283	1.58	30'	EL	14.5	
		HL-93(Opr)	N/A	--	1.344	--	1.35	0.283	2.38	30'	EL	14.5	0.574	1.34	30'	EL	1.45	N/A	--	--	--	--	--	
		HS-20(Inv)	36.000	2	1.183	42.587	1.75	0.283	2.53	30'	EL	11.6	0.574	1.18	30'	EL	1.45	0.80	0.283	2.20	30'	EL	11.6	
		HS-20(Opr)	36.000	--	1.533	55.205	1.35	0.283	3.28	30'	EL	11.6	0.574	1.53	30'	EL	1.45	N/A	--	--	--	--	--	
LEGAL LOAD RATING	SV	SNSH	13.500	--	2.895	39.081	1.4	0.283	5.18	30'	EL	14.5	0.574	2.89	30'	EL	1.45	0.80	0.283	3.56	30'	EL	14.5	
		SNGARBS2	20.000	--	2.240	44.792	1.4	0.283	4.53	30'	EL	11.6	0.574	2.24	30'	EL	1.45	0.80	0.283	3.15	30'	EL	11.6	
		SNAGRIS2	22.000	--	2.157	47.463	1.4	0.283	4.6	30'	EL	11.6	0.574	2.16	30'	EL	1.45	0.80	0.283	3.20	30'	EL	11.6	
		SNCOTTS3	27.250	--	1.462	39.849	1.4	0.283	2.6	30'	EL	14.5	0.574	1.46	30'	EL	1.45	0.80	0.283	1.79	30'	EL	14.5	
		SNAGGRS4	34.925	--	1.346	46.999	1.4	0.283	2.5	30'	EL	14.5	0.574	1.35	30'	EL	1.45	0.80	0.283	1.72	30'	EL	14.5	
		SNS5A	35.550	--	1.427	50.733	1.4	0.283	2.42	30'	EL	14.5	0.574	1.43	30'	EL	1.45	0.80	0.283	1.67	30'	EL	14.5	
		SNS6A	39.950	--	1.341	53.59	1.4	0.283	2.29	30'	EL	14.5	0.574	1.34	30'	EL	1.45	0.80	0.283	1.58	30'	EL	14.5	
		SNS7B	42.000	--	1.369	57.505	1.4	0.283	2.23	30'	EL	14.5	0.574	1.37	30'	EL	1.45	0.80	0.283	1.53	30'	EL	14.5	
	TTST	TNAGRIT3	33.000	--	1.593	52.58	1.4	0.283	2.97	30'	EL	14.5	0.574	1.59	30'	EL	1.45	0.80	0.283	2.04	30'	EL	14.5	
		TNT4A	33.075	--	1.483	49.043	1.4	0.283	2.82	30'	EL	14.5	0.574	1.48	30'	EL	1.45	0.80	0.283	1.94	30'	EL	14.5	
		TNT6A	41.600	--	1.433	59.622	1.4	0.283	2.56	30'	EL	14.5	0.574	1.43	30'	EL	1.45	0.80	0.283	1.76	30'	EL	14.5	
		TNT7A	42.000	--	1.363	57.264	1.4	0.283	2.64	30'	EL	14.5	0.574	1.36	30'	EL	1.45	0.80	0.283	1.82	30'	EL	14.5	
		TNT7B	42.000	--	1.331	55.915	1.4	0.283	2.49	30'	EL	14.5	0.574	1.33	30'	EL	1.45	0.80	0.283	1.72	30'	EL	14.5	
		TNAGRIT4	43.000	--	1.287	55.356	1.4	0.283	2.58	30'	EL	14.5	0.574	1.29	30'	EL	1.45	0.80	0.283	1.78	30'	EL	14.5	
		TNAGT5A	45.000	--	1.381	62.151	1.4	0.283	2.5	30'	EL	14.5	0.574	1.38	30'	EL	1.45	0.80	0.283	1.72	30'	EL	14.5	
		TNAGT5B	45.000	3	1.212	54.54	1.4	0.283	2.41	30'	EL	11.6	0.574	1.21	30'	EL	1.45	0.80	0.283	1.66	30'	EL	11.6	

LOAD FACTORS:

DESIGN LOAD RATING FACTORS	LIMIT STATE	γ_{DC}	γ_{DW}
	STRENGTH I	1.25	1.50
	SERVICE III	1.00	1.00

NOTES:

MINIMUM RATING FACTORS ARE BASED ON THE STRENGTH I AND SERVICE III LIMIT STATES.

ALLOWABLE STRESSES FOR SERVICE III LIMIT STATE ARE AS REQUIRED FOR DESIGN.

COMMENTS:

1.
2.
3.
4.

CONTROLLING LOAD RATING

1. DESIGN LOAD RATING (HL-93)
2. DESIGN LOAD RATING (HS-20)
3. LEGAL LOAD RATING **

** SEE CHART FOR VEHICLE TYPE

GIRDER LOCATION

I - INTERIOR GIRDER
EL - EXTERIOR LEFT GIRDER
ER - EXTERIOR RIGHT GIRDER

LRFR SUMMARY

FOR SPAN 'A'

PROJECT NO. BP4.R014.1

HALIFAX COUNTY

STATION: 12+17.70 -L-

SHEET 1 OF 3

THIS DRAWING REVIEWED & ADOPTED FOR USE AT THE REFERENCED LOCATION BY THE UNDERSIGNED:

NORTH CAROLINA PROFESSIONAL SEAL 14455 ENGINEER FED L. BARTELT

DOCUMENT NOT CONSIDERED FINAL UNLESS ALL SIGNATURES COMPLETED

PLAN PREPARED BY:

Founded 1998

ALPHA & OMEGA GROUP
CIVIL | STRUCTURAL | WATER RESOURCES

ALPHA AND OMEGA GROUP, PC
4601 LAKE BOONE TRAIL, SUITE 3C, RALEIGH, NC 27607

Firm License No. C-1684 www.aogroup.com

STATE OF NORTH CAROLINA
DEPARTMENT OF TRANSPORTATION
RALEIGH

STANDARD
LRFR SUMMARY FOR 30' CORED SLAB UNIT 90° SKEW
(NON-INTERSTATE TRAFFIC)

REVISIONS								SHEET NO.
NO.	BY:	DATE:	NO.	BY:	DATE:			S-4
1			3					TOTAL SHEETS
2			4					26

ASSEMBLED BY :	DM SHAUT	DATE :	12-23-21
CHECKED BY :	TG ZEBLO	DATE :	12-23-21
DRAWN BY :	CVC	6/10	
CHECKED BY :	DNS	6/10	

$$$$$$SYSTIME$$$$$
$$$$$$$$$$$$$$$$$$$$DGN$$$$$$$$$$$$$$$$$$$$$$$
$$$$USERNAME$$$$

STD. NO. 21LRFR1_90S_30L

LOAD AND RESISTANCE FACTOR RATING (LRFD) SUMMARY FOR PRESTRESSED CONCRETE GIRDERS

LEVEL		VEHICLE	WEIGHT (W) (TONS)	CONTROLLING LOAD RATING	MINIMUM RATING FACTORS (RF)	TONS = W X RF	STRENGTH I LIMIT STATE											SERVICE III LIMIT STATE						COMMENT NUMBER
							LIVELOAD FACTORS	MOMENT					SHEAR					LIVELOAD FACTORS	MOMENT					
								DISTRIBUTION FACTORS (DF)	RATING FACTOR	SPAN	GIRDER LOCATION	DISTANCE FROM LEFT END OF SPAN (ft)	DISTRIBUTION FACTORS (DF)	RATING FACTOR	SPAN	GIRDER LOCATION	DISTANCE FROM LEFT END OF SPAN (ft)		DISTRIBUTION FACTORS (DF)	RATING FACTOR	SPAN	GIRDER LOCATION	DISTANCE FROM LEFT END OF SPAN (ft)	
DESIGN LOAD RATING		HL-93(Inv)	N/A	1	1.055	--	1.75	0.275	1.23	55'	EL	27	0.523	1.23	55'	EL	5.4	0.80	0.275	1.05	55'	EL	27	
		HL-93(Opr)	N/A	--	1.591	--	1.35	0.275	1.59	55'	EL	27	0.523	1.59	55'	EL	5.4	N/A	--	--	--	--	--	
		HS-20(Inv)	36.000	2	1.322	47.585	1.75	0.275	1.54	55'	EL	27	0.523	1.47	55'	EL	5.4	0.80	0.275	1.32	55'	EL	27	
		HS-20(Opr)	36.000	--	1.9	68.396	1.35	0.275	1.99	55'	EL	27	0.523	1.9	55'	EL	5.4	N/A	--	--	--	--	--	
LEGAL LOAD RATING	SV	SNSH	13.500	--	2.776	37.476	1.4	0.275	4.04	55'	EL	27	0.523	4.17	55'	EL	5.4	0.80	0.275	2.78	55'	EL	27	
		SNGARBS2	20.000	--	2.155	43.095	1.4	0.275	3.14	55'	EL	27	0.523	3.02	55'	EL	5.4	0.80	0.275	2.15	55'	EL	27	
		SNAGRIS2	22.000	--	2.079	45.734	1.4	0.275	3.03	55'	EL	27	0.523	2.83	55'	EL	5.4	0.80	0.275	2.08	55'	EL	27	
		SNCOTTS3	27.250	--	1.384	37.708	1.4	0.275	2.01	55'	EL	27	0.523	2.09	55'	EL	5.4	0.80	0.275	1.38	55'	EL	27	
		SNAGGRS4	34.925	--	1.189	41.527	1.4	0.275	1.73	55'	EL	27	0.523	1.77	55'	EL	5.4	0.80	0.275	1.19	55'	EL	27	
		SNS5A	35.550	--	1.16	41.255	1.4	0.275	1.69	55'	EL	27	0.523	1.82	55'	EL	5.4	0.80	0.275	1.16	55'	EL	27	
		SNS6A	39.950	--	1.079	43.102	1.4	0.275	1.57	55'	EL	27	0.523	1.68	55'	EL	5.4	0.80	0.275	1.08	55'	EL	27	
		SNS7B	42.000	--	1.028	43.175	1.4	0.275	1.5	55'	EL	27	0.523	1.67	55'	EL	5.4	0.80	0.275	1.03	55'	EL	27	
	TTST	TNAGRIT3	33.000	--	1.32	43.556	1.4	0.275	1.92	55'	EL	27	0.523	1.98	55'	EL	5.4	0.80	0.275	1.32	55'	EL	27	
		TNT4A	33.075	--	1.33	43.979	1.4	0.275	1.94	55'	EL	27	0.523	1.91	55'	EL	5.4	0.80	0.275	1.33	55'	EL	27	
		TNT6A	41.600	--	1.101	45.811	1.4	0.275	1.6	55'	EL	27	0.523	1.83	55'	EL	5.4	0.80	0.275	1.10	55'	EL	27	
		TNT7A	42.000	--	1.114	46.804	1.4	0.275	1.62	55'	EL	27	0.523	1.71	55'	EL	5.4	0.80	0.275	1.11	55'	EL	27	
		TNT7B	42.000	--	1.163	48.848	1.4	0.275	1.69	55'	EL	27	0.523	1.62	55'	EL	5.4	0.80	0.275	1.16	55'	EL	27	
		TNAGRIT4	43.000	--	1.101	47.33	1.4	0.275	1.6	55'	EL	27	0.523	1.56	55'	EL	5.4	0.80	0.275	1.10	55'	EL	27	
		TNAGT5A	45.000	--	1.031	46.405	1.4	0.275	1.5	55'	EL	27	0.523	1.58	55'	EL	5.4	0.80	0.275	1.03	55'	EL	27	
		TNAGT5B	45.000	3	1.013	45.582	1.4	0.275	1.47	55'	EL	27	0.523	1.48	55'	EL	5.4	0.80	0.275	1.01	55'	EL	27	

LOAD FACTORS:

DESIGN LOAD RATING FACTORS	LIMIT STATE	γ_{DC}	γ_{DW}
	STRENGTH I	1.25	1.50
	SERVICE III	1.00	1.00

NOTES:

MINIMUM RATING FACTORS ARE BASED ON THE STRENGTH I AND SERVICE III LIMIT STATES.

ALLOWABLE STRESSES FOR SERVICE III LIMIT STATE ARE AS REQUIRED FOR DESIGN.

COMMENTS:

1.
2.
3.
4.

CONTROLLING LOAD RATING

(1) DESIGN LOAD RATING (HL-93)

(2) DESIGN LOAD RATING (HS-20)

(3) LEGAL LOAD RATING **

** SEE CHART FOR VEHICLE TYPE

GIRDER LOCATION

I - INTERIOR GIRDER
EL - EXTERIOR LEFT GIRDER
ER - EXTERIOR RIGHT GIRDER

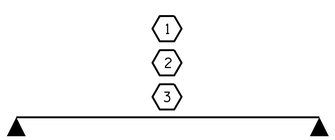

LRFR SUMMARY

FOR SPAN 'B'

PROJECT NO. BP4.R014.1

HALIFAX COUNTY

STATION: 12+17.70 -L-

SHEET 2 OF 3

PLAN PREPARED BY:

Founded 1998

ALPHA & OMEGA GROUP
CIVIL | STRUCTURAL | WATER RESOURCES

ALPHA AND OMEGA GROUP, PC
4601 LAKE BOONE TRAIL, SUITE 3C, RALEIGH, NC 27607
Firm License No. C-1684 www.aogroup.com

THIS DRAWING REVIEWED & ADOPTED FOR USE AT THE REFERENCED LOCATION BY THE UNDERSIGNED:

NORTH CAROLINA PROFESSIONAL SEAL 14455 ENGINEER FED L. BARTELT

DOCUMENT NOT CONSIDERED FINAL UNLESS ALL SIGNATURES COMPLETED

STATE OF NORTH CAROLINA
DEPARTMENT OF TRANSPORTATION
RALEIGH

STANDARD

LRFR SUMMARY FOR 55' CORED SLAB UNIT 90° SKEW

(NON-INTERSTATE TRAFFIC)

REVISIONS								SHEET NO.
NO.	BY:	DATE:	NO.	BY:	DATE:			S-5
1			3					TOTAL SHEETS
2			4					26

ASSEMBLED BY :	DM SHAUT	DATE :	12-23-21
CHECKED BY :	TG ZEBLO	DATE :	12-23-21
DRAWN BY :	CVC 6/10		
CHECKED BY :	DNS 6/10		

$$$$$$SYSTIME$$$$$
$$$$$$$$$$$$$$$$$$$$DGN$$$$$$$$$$$$$$$$$$$$$$$
$$$$USERNAME$$$$

STD. NO. 21LRFR1_90S_55L

LOAD AND RESISTANCE FACTOR RATING (LRFD) SUMMARY FOR PRESTRESSED CONCRETE GIRDERS

LEVEL		VEHICLE	WEIGHT (W) (TONS)	CONTROLLING LOAD RATING	MINIMUM RATING FACTORS (RF)	TONS = W X RF	STRENGTH I LIMIT STATE											SERVICE III LIMIT STATE						COMMENT NUMBER
								MOMENT					SHEAR						MOMENT					
							LIVELOAD FACTORS	DISTRIBUTION FACTORS (DF)	RATING FACTOR	SPAN	GIRDER LOCATION	DISTANCE FROM LEFT END OF SPAN (ft)	DISTRIBUTION FACTORS (DF)	RATING FACTOR	SPAN	GIRDER LOCATION	DISTANCE FROM LEFT END OF SPAN (ft)	LIVELOAD FACTORS	DISTRIBUTION FACTORS (DF)	RATING FACTOR	SPAN	GIRDER LOCATION	DISTANCE FROM LEFT END OF SPAN (ft)	
DESIGN LOAD RATING		HL-93(Inv)	N/A	1	1.018	--	1.75	0.284	2.53	25'	EL	12	0.591	1.02	25'	EL	1.2	0.80	0.284	2.34	25'	EL	12	
		HL-93(Opr)	N/A	--	1.319	--	1.35	0.284	3.29	25'	EL	12	0.591	1.32	25'	EL	1.2	N/A	--	--	--	--	--	
		HS-20(Inv)	36.000	2	1.178	42.397	1.75	0.284	3.76	25'	EL	12	0.591	1.18	25'	EL	1.2	0.80	0.284	3.46	25'	EL	12	
		HS-20(Opr)	36.000	--	1.527	54.959	1.35	0.284	4.87	25'	EL	12	0.591	1.53	25'	EL	1.2	N/A	--	--	--	--	--	
LEGAL LOAD RATING	SV	SNSH	13.500	--	2.728	36.833	1.4	0.284	6.83	25'	EL	12	0.591	2.73	25'	EL	1.2	0.80	0.284	5.04	25'	EL	12	
		SNGARBS2	20.000	--	2.186	43.718	1.4	0.284	6.39	25'	EL	12	0.591	2.19	25'	EL	1.2	0.80	0.284	4.72	25'	EL	12	
		SNAGRIS2	22.000	--	2.141	47.107	1.4	0.284	6.83	25'	EL	12	0.591	2.14	25'	EL	1.2	0.80	0.284	5.04	25'	EL	12	
		SNCOTTS3	27.250	--	1.385	37.731	1.4	0.284	3.57	25'	EL	12	0.591	1.38	25'	EL	1.2	0.80	0.284	2.64	25'	EL	12	
		SNAGGRS4	34.925	--	1.332	46.511	1.4	0.284	3.56	25'	EL	12	0.591	1.33	25'	EL	1.2	0.80	0.284	2.62	25'	EL	12	
		SNS5A	35.550	--	1.392	49.477	1.4	0.284	3.45	25'	EL	12	0.591	1.39	25'	EL	1.2	0.80	0.284	2.54	25'	EL	12	
		SNS6A	39.950	--	1.334	53.31	1.4	0.284	3.23	25'	EL	12	0.591	1.33	25'	EL	1.2	0.80	0.284	2.39	25'	EL	12	
		SNS7B	42.000	--	1.344	56.455	1.4	0.284	3.23	25'	EL	12	0.591	1.34	25'	EL	1.2	0.80	0.284	2.37	25'	EL	12	
	TTST	TNAGRIT3	33.000	--	1.634	53.934	1.4	0.284	4.55	25'	EL	12	0.591	1.63	25'	EL	1.2	0.80	0.284	3.36	25'	EL	12	
		TNT4A	33.075	--	1.483	49.049	1.4	0.284	3.95	25'	EL	12	0.591	1.48	25'	EL	1.2	0.80	0.284	2.92	25'	EL	12	
		TNT6A	41.600	--	1.398	58.138	1.4	0.284	3.71	25'	EL	12	0.591	1.4	25'	EL	1.2	0.80	0.284	2.74	25'	EL	12	
		TNT7A	42.000	--	1.391	58.419	1.4	0.284	3.84	25'	EL	12	0.591	1.39	25'	EL	1.2	0.80	0.284	2.83	25'	EL	12	
		TNT7B	42.000	--	1.343	56.385	1.4	0.284	3.46	25'	EL	12	0.591	1.34	25'	EL	1.2	0.80	0.284	2.55	25'	EL	12	
		TNAGRIT4	43.000	--	1.340	57.604	1.4	0.284	3.71	25'	EL	12	0.591	1.34	25'	EL	1.2	0.80	0.284	2.73	25'	EL	12	
		TNAGT5A	45.000	--	1.367	61.501	1.4	0.284	3.71	25'	EL	12	0.591	1.37	25'	EL	1.2	0.80	0.284	2.73	25'	EL	12	
		TNAGT5B	45.000	3	1.239	55.766	1.4	0.284	3.65	25'	EL	9.6	0.591	1.24	25'	EL	1.2	0.80	0.284	2.71	25'	EL	9.6	

LOAD FACTORS:

DESIGN LOAD RATING FACTORS	LIMIT STATE	γ_{DC}	γ_{DW}
	STRENGTH I	1.25	1.50
	SERVICE III	1.00	1.00

NOTES:

MINIMUM RATING FACTORS ARE BASED ON THE STRENGTH I AND SERVICE III LIMIT STATES.

ALLOWABLE STRESSES FOR SERVICE III LIMIT STATE ARE AS REQUIRED FOR DESIGN.

COMMENTS:

1.
2.
3.
4.

CONTROLLING LOAD RATING

1. DESIGN LOAD RATING (HL-93)
2. DESIGN LOAD RATING (HS-20)
3. LEGAL LOAD RATING **

** SEE CHART FOR VEHICLE TYPE

GIRDER LOCATION

I - INTERIOR GIRDER
EL - EXTERIOR LEFT GIRDER
ER - EXTERIOR RIGHT GIRDER

LRFR SUMMARY

FOR SPAN 'C'

PROJECT NO. BP4.R014.1

HALIFAX COUNTY

STATION: 12+17.70 -L-

SHEET 3 OF 3

PLAN PREPARED BY:

ALPHA & OMEGA GROUP
CIVIL | STRUCTURAL | WATER RESOURCES

ALPHA AND OMEGA GROUP, PC
4601 LAKE BOONE TRAIL, SUITE 3C, RALEIGH, NC 27607
Firm License No. C-1684 www.aogroup.com

THIS DRAWING REVIEWED & ADOPTED FOR USE AT THE REFERENCED LOCATION BY THE UNDERSIGNED:

NORTH CAROLINA PROFESSIONAL SEAL 14455 ENGINEER FED L. BARTELT

DOCUMENT NOT CONSIDERED FINAL UNLESS ALL SIGNATURES COMPLETED

STATE OF NORTH CAROLINA
DEPARTMENT OF TRANSPORTATION
RALEIGH

STANDARD

LRFR SUMMARY FOR 25' CORED SLAB UNIT 90° SKEW

(NON-INTERSTATE TRAFFIC)

REVISIONS								SHEET NO.
NO.	BY:	DATE:	NO.	BY:	DATE:			S-6
1			3					TOTAL SHEETS
2			4					26

ASSEMBLED BY :	DM SHAUT	DATE :	12-23-21
CHECKED BY :	TG ZEBLO	DATE :	12-23-21
DRAWN BY :	CVC 6/10		
CHECKED BY :	DNS 6/10		

$$$$$$SYSTIME$$$$$
$$$$$$$$$$$$$$$$$$$$DGN$$$$$$$$$$$$$$$$$$$$$$$
$$$$USERNAME$$$$

STD. NO. 21LRFR1_90S_25L

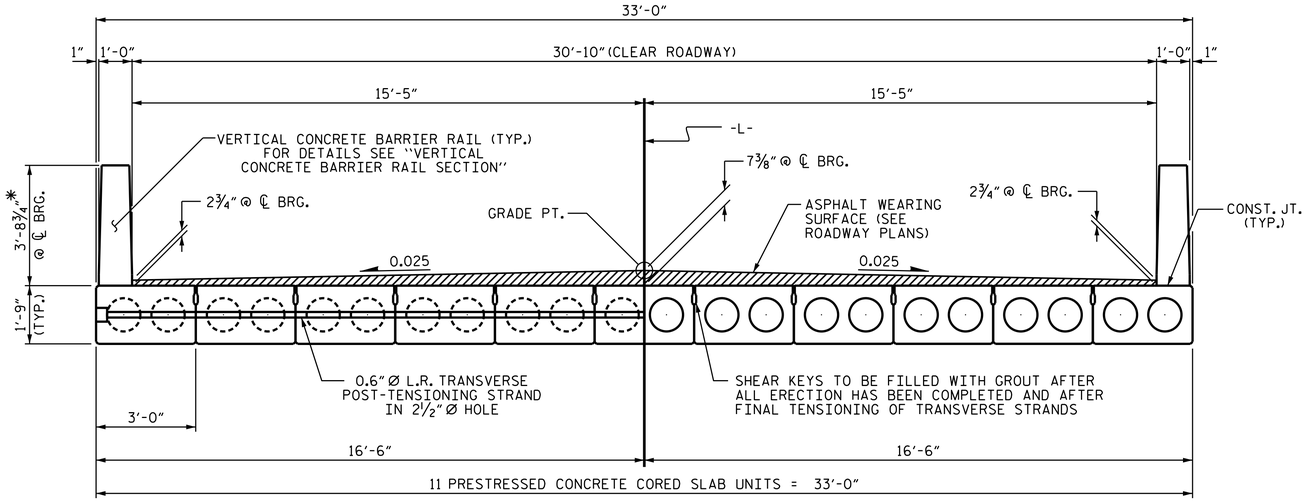

HALF SECTION
AT INTERMEDIATE DIAPHRAGMS

HALF SECTION
THROUGH VOIDS

TYPICAL SECTION

* - THE MAXIMUM BARRIER RAIL HEIGHT AND ASPHALT THICKNESS IS SHOWN. THE HEIGHT OF THE BARRIER RAIL AND ASPHALT THICKNESS VARIES WHILE THE TOP OF THE BARRIER RAIL FOLLOWS THE PROFILE OF THE GUTTERLINE. FOR RAIL HEIGHT DETAILS AND ASPHALT THICKNESS SEE THE "VERTICAL CONCRETE BARRIER RAIL SECTION" DETAIL.

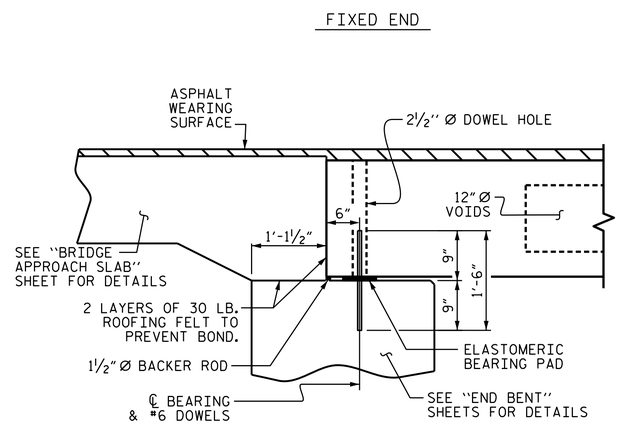

SECTION AT END BENT

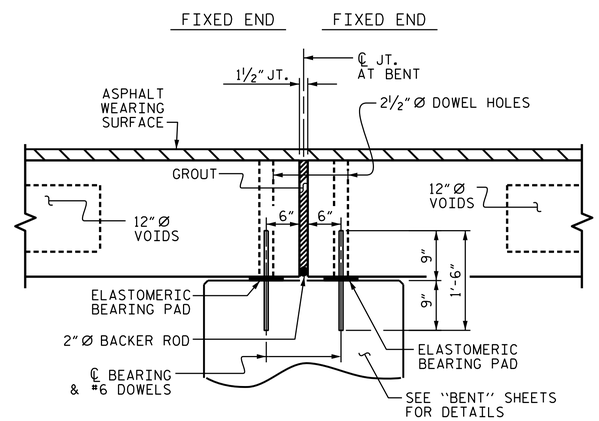

SECTION AT BENT

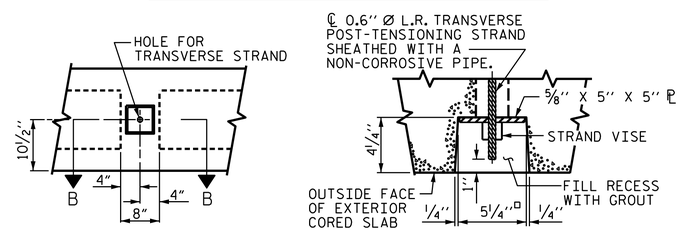

ELEVATION VIEW

SECTION B-B

GROUTED RECESS AT END OF POST-TENSIONED STRAND OF CORED SLABS

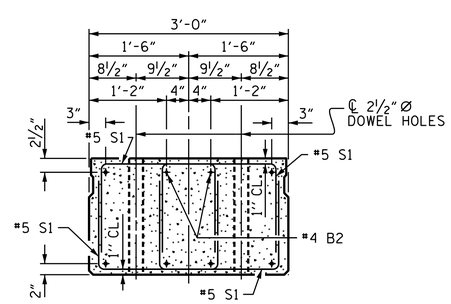

END ELEVATION

SHOWING PLACEMENT OF DOUBLE STIRRUPS AND LOCATION OF DOWEL HOLES. (STRAND LAYOUT NOT SHOWN.) INTERIOR SLAB UNIT SHOWN-EXTERIOR SLAB UNIT SIMILAR EXCEPT SHEAR KEY LOCATION.

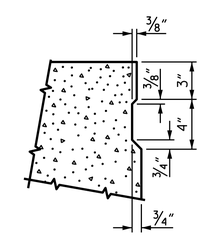

SHEAR KEY DETAIL

NOTE: OMIT SHEAR KEY ON OUTSIDE FACE OF EXTERIOR CORED SLABS.

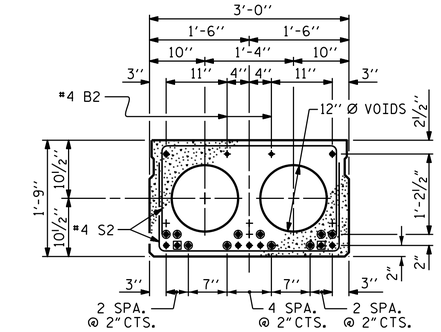

INTERIOR SLAB SECTION (30' UNIT)

(9 STRANDS REQUIRED)

0.6" Ø LOW RELAXATION STRAND LAYOUT

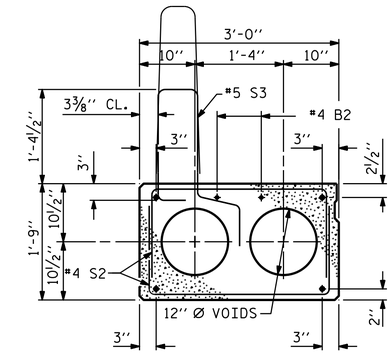

EXT. SLAB SECTION

(FOR PRESTRESSED STRAND LAYOUT, SEE INTERIOR SLAB SECTION.)

~~BOND SHALL BE BROKEN ON THESE STRANDS FOR A DISTANCE OF 6'-0" FROM END OF CORED SLAB UNIT. SEE STANDARD SPECIFICATIONS, ARTICLE 1078-7.~~

BOND SHALL BE BROKEN ON THESE STRANDS FOR A DISTANCE OF 2'-0" FROM END OF CORED SLAB UNIT. SEE STANDARD SPECIFICATIONS, ARTICLE 1078-7.

OPTIONAL FULL LENGTH DEBONDED STRANDS. THESE STRANDS ARE NOT REQUIRED. IF THE FABRICATOR CHOOSES TO INCLUDE THESE STRANDS IN THE CORED SLAB UNIT, THE STRANDS SHALL BE DEBONDED FOR THE FULL LENGTH OF THE UNIT AT NO ADDITIONAL COST. SEE STANDARD SPECIFICATIONS, ARTICLE 1078-7.

DEBONDING LEGEND

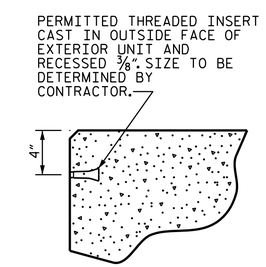

THREADED INSERT DETAIL

PROJECT NO. BP4.R014.1
HALIFAX COUNTY
STATION: 12+17.70 -L-

SHEET 1 OF 3

STATE OF NORTH CAROLINA
DEPARTMENT OF TRANSPORTATION
RALEIGH

STANDARD
3'-0" X 1'-9"
PRESTRESSED CONCRETE CORED SLAB UNIT
90° SKEW (SPAN A)

ASSEMBLED BY : DM SHAUT	DATE : 12-23-21
CHECKED BY : TG ZEBLO	DATE : 12-23-21
DRAWN BY : DGE 5/09	REV. 9/14 MAA/TMG
CHECKED BY : BCH 6/09	

PLAN PREPARED BY:
Founded 1998
ALPHA & OMEGA GROUP
CIVIL | STRUCTURAL | WATER RESOURCES
ALPHA AND OMEGA GROUP, PC
4601 LAKE BOONE TRAIL, SUITE 3C, RALEIGH, NC 27607
Firm License No. C-1684 www.aogroup.com

NORTH CAROLINA PROFESSIONAL SEAL 14455 ENGINEER FED L. BARTELT

DOCUMENT NOT CONSIDERED FINAL UNLESS ALL SIGNATURES COMPLETED

REVISIONS								SHEET NO.
NO.	BY:	DATE:	NO.	BY:	DATE:			S-7
1			3					TOTAL SHEETS
2			4					26

STD. NO. 21"PCS2_33_90S

$$$$$$SYSTIME$$$$$
$$$$$$$$$$$$$$$$$$$$$$DGN$$$$$$$$$$$$$$$$$$$$$$
$$$$USERNAME$$$$

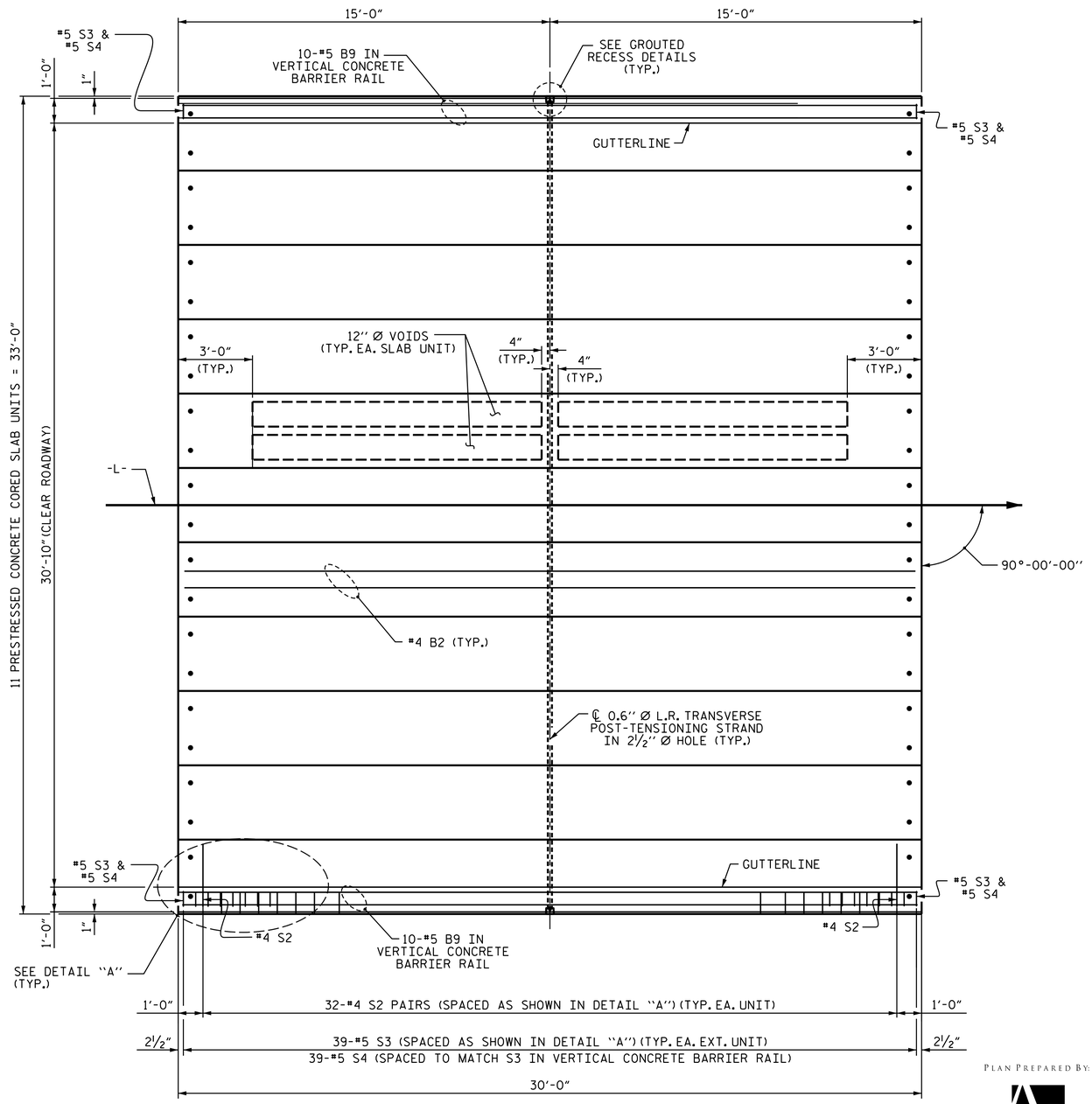

PLAN OF UNIT

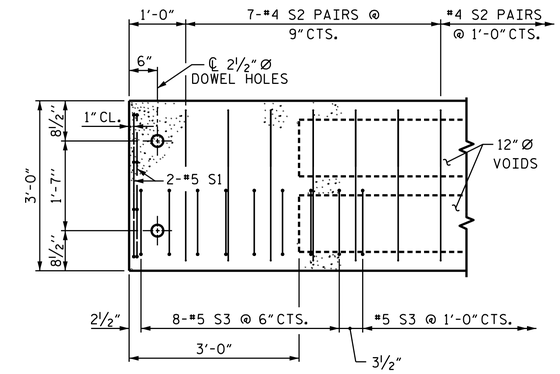

DETAIL "A"

(TYPICAL EACH END OF UNIT)
NOTE: EXTERIOR UNIT SHOWN - INTERIOR UNIT SIMILAR EXCEPT OMIT #5 S3 BARS.

PROJECT NO. BP4.R014.1
HALIFAX COUNTY
STATION: 12+17.70 -L-

SHEET 2 OF 3

STATE OF NORTH CAROLINA
DEPARTMENT OF TRANSPORTATION
RALEIGH

PLAN OF 30' UNIT
30'-10" CLEAR ROADWAY
90° SKEW
(SPAN A)

ASSEMBLED BY : DM SHAUT		DATE : 12-23-21	
CHECKED BY : TG ZEBLO		DATE : 12-23-21	
DRAWN BY : DGE 3/09	REV. 12/5/11	MAA/AAC	
CHECKED BY : BCH 3/09	REV. 8/14	MAA/TMG	

PLAN PREPARED BY:

Founded 1998

ALPHA & OMEGA GROUP
CIVIL | STRUCTURAL | WATER RESOURCES

ALPHA AND OMEGA GROUP, PC
4601 LAKE BOONE TRAIL, SUITE 3C, RALEIGH, NC 27607

Firm License No. C-1684 www.aagroup.com

THIS DRAWING REVIEWED & ADOPTED FOR USE AT THE REFERENCED LOCATION BY THE UNDERSIGNED:

NORTH CAROLINA PROFESSIONAL SEAL 14455 ENGINEER TED L. BARTELL

DOCUMENT NOT CONSIDERED FINAL UNLESS ALL SIGNATURES COMPLETED

REVISIONS								SHEET NO.
NO.	BY:	DATE:	NO.	BY:	DATE:			S-8
1			3					TOTAL SHEETS
2			4					26

[redacted]

STD. NO. 21" PCS_33_90S_30L

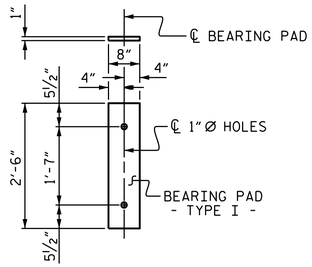

FIXED END
(TYPE I - 22 REQ'D)

ELASTOMERIC BEARING DETAILS

ELASTOMER IN ALL BEARINGS SHALL BE 50 DUROMETER HARDNESS.

GRADE 270 STRANDS	
	0.6"Ø L.R.
AREA (SQUARE INCHES)	0.217
ULTIMATE STRENGTH (LBS. PER STRAND)	58,600
APPLIED PRESTRESS (LBS. PER STRAND)	43,950

CONCRETE RELEASE STRENGTH	
UNIT	PSI
30' UNITS	4000

DEAD LOAD DEFLECTION AND CAMBER	
	3'-0" x 1'-9"
30' CORED SLAB UNIT	0.6"Ø L.R. STRAND
CAMBER (SLAB ALONE IN PLACE)	¼" ↑
DEFLECTION DUE TO SUPERIMPOSED DEAD LOAD**	⅛" ↓
FINAL CAMBER	⅛" ↑

** INCLUDES FUTURE WEARING SURFACE

CORED SLABS REQUIRED			
	NUMBER	LENGTH	TOTAL LENGTH
30' UNIT			
EXTERIOR C.S.	2	30'-0"	60'-0"
INTERIOR C.S.	9	30'-0"	270'-0"
TOTAL	11		330'-0"

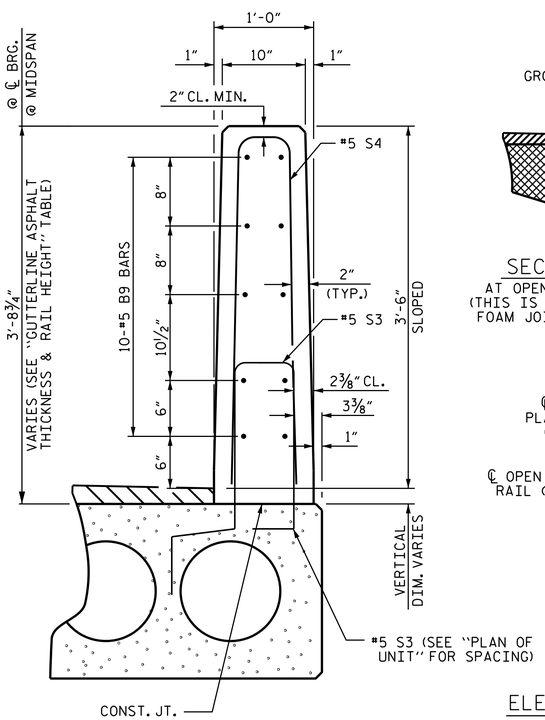

VERTICAL CONCRETE BARRIER RAIL SECTION

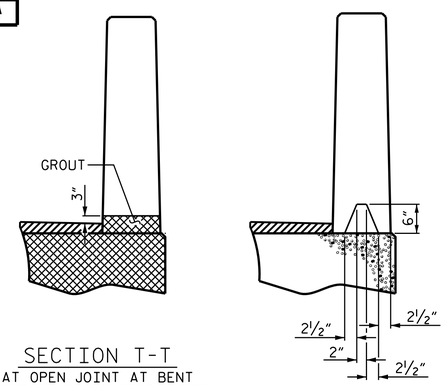

SECTION T-T
AT OPEN JOINT AT BENT
(THIS IS TO BE USED WHERE FOAM JOINT IS NOT USED)

SECTION S-S
AT DAM IN OPEN JOINT
(THIS IS TO BE USED ONLY WHEN SLIP FORM IS USED)

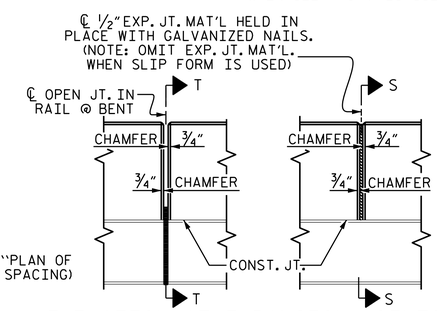

ELEVATION AT EXPANSION JOINTS

BAR TYPES

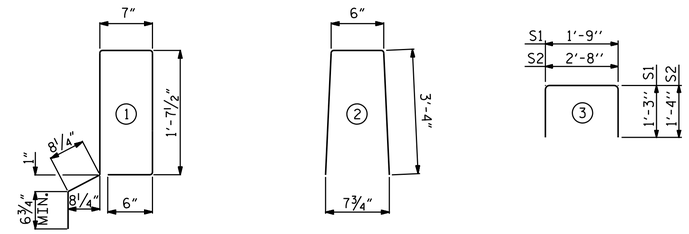

ALL BAR DIMENSIONS ARE OUT TO OUT

BILL OF MATERIAL FOR VERTICAL CONCRETE BARRIER RAIL						
BAR	BARS PER PAIR OF EXTERIOR UNITS	TOTAL NO.	SIZE	TYPE	LENGTH	WEIGHT
	30' UNIT					
* B9	20	20	#5	STR	29'-7"	617
* S4	78	78	#5	2	7'-2"	583
* EPOXY COATED REINFORCING STEEL				LBS.		1200
CLASS AA CONCRETE				CU.YDS.		7.7
TOTAL VERTICAL CONCRETE BARRIER RAIL				LN. FT.		60.25

BILL OF MATERIAL FOR ONE 30' CORED SLAB UNIT							
				EXTERIOR UNIT		INTERIOR UNIT	
BAR	NUMBER	SIZE	TYPE	LENGTH	WEIGHT	LENGTH	WEIGHT
B2	2	#4	STR	29'-8"	40	29'-8"	40
S1	8	#5	3	4'-3"	35	4'-3"	35
S2	64	#4	3	5'-4"	228	5'-4"	228
* S3	39	#5	1	5'-7"	227		
REINFORCING STEEL			LBS.		303		303
* EPOXY COATED REINFORCING STEEL			LBS.		227		
5000 P.S.I. CONCRETE			CU. YDS.		4.4		4.4
0.6"Ø L.R. STRANDS			No.		9		9

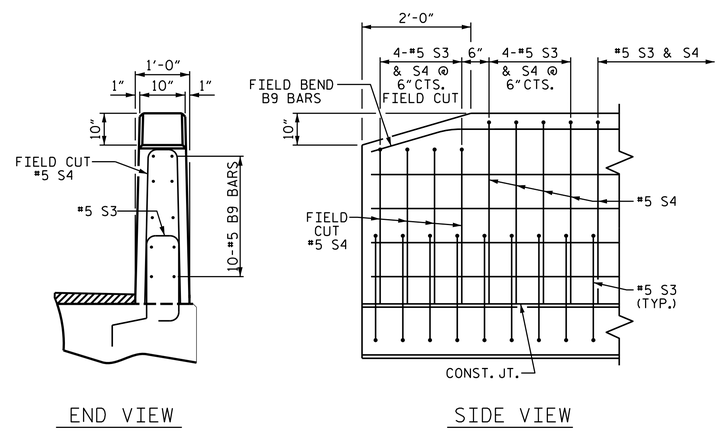

END VIEW

SIDE VIEW

END OF RAIL DETAILS

NOTES

ALL PRESTRESSING STRANDS SHALL BE 7-WIRE LOW RELAXATION GRADE 270 STRANDS AND SHALL CONFORM TO AASHTO M203 EXCEPT FOR SAMPLING REQUIREMENTS WHICH SHALL BE IN ACCORDANCE WITH THE STANDARD SPECIFICATIONS.

ALL REINFORCING STEEL CAST WITH THE CORED SLAB SECTIONS SHALL BE GRADE 60 AND SHALL BE INCLUDED IN THE UNIT PRICE BID FOR PRESTRESSED CONCRETE CORED SLABS.

RECESSES FOR TRANSVERSE STRANDS SHALL BE GROUTED AFTER THE TENSIONING OF THE STRANDS.

THE 2½"Ø DOWEL HOLES AT FIXED ENDS OF SLAB SECTIONS SHALL BE FILLED WITH NON-SHRINK GROUT.

THE BACKER RODS SHALL CONFORM TO THE REQUIREMENTS OF TYPE M BOND BREAKER. SEE SECTION 1028 OF THE STANDARD SPECIFICATIONS.

WHEN CORED SLABS ARE CAST, AN INTERNAL HOLD-DOWN SYSTEM SHALL BE EMPLOYED TO PREVENT VOIDS FROM RISING OR MOVING SIDEWAYS. AT LEAST SIX WEEKS PRIOR TO CASTING CORED SLABS, THE CONTRACTOR SHALL SUBMIT TO THE ENGINEER FOR REVIEW AND COMMENT, DETAILED DRAWINGS OF THE PROPOSED HOLD-DOWN SYSTEM. IN ADDITION TO STRUCTURAL DETAILS, LOCATION AND SPACING OF THE HOLD-DOWNS SHALL BE INDICATED.

ALL REINFORCING STEEL IN THE VERTICAL CONCRETE BARRIER RAIL SHALL BE EPOXY COATED.

PRESTRESSING STRANDS SHALL BE CUT FLUSH WITH THE CORED SLAB UNIT ENDS.

APPLY EPOXY PROTECTIVE COATING TO CORED SLAB UNIT ENDS.

GROOVED CONTRACTION JOINTS, ½" IN DEPTH, SHALL BE TOOLED IN ALL EXPOSED FACES OF THE BARRIER RAIL AND IN ACCORDANCE WITH ARTICLE 825-10(B) OF THE STANDARD SPECIFICATIONS. A CONTRACTION JOINT SHALL BE LOCATED AT EACH THIRD POINT BETWEEN BARRIER RAIL EXPANSION JOINTS. ONLY ONE CONTRACTION JOINT IS REQUIRED AT MIDPOINT OF BARRIER RAIL SEGMENTS LESS THAN 20 FEET IN LENGTH AND NO CONTRACTION JOINTS ARE REQUIRED FOR THOSE SEGMENTS LESS THAN 10 FEET IN LENGTH.

FLAME CUTTING OF THE TRANSVERSE POST-TENSIONING STRAND IS NOT ALLOWED.

THE TRANSFER OF LOAD FROM THE ANCHORAGES TO THE CORED SLAB UNIT SHALL BE DONE WHEN THE CONCRETE HAS REACHED A COMPRESSIVE STRENGTH OF NOT LESS THAN THE REQUIRED STRENGTH SHOWN IN THE "CONCRETE RELEASE STRENGTH" TABLE.

FOR GROUT FOR STRUCTURES, SEE SPECIAL PROVISIONS.

THE PERMITTED THREADED INSERTS ARE DETAILED AS AN OPTION FOR THE CONTRACTOR TO ATTACH FALSEWORK AND FORMWORK DURING CONSTRUCTION.

THE PERMITTED THREADED INSERTS IN THE EXTERIOR UNITS SHALL BE SIZED BY THE CONTRACTOR, SPACED AT 4'-0" CENTERS AND GALVANIZED IN ACCORDANCE WITH SECTION 1076 OF THE STANDARD SPECIFICATIONS. STAINLESS STEEL THREADED INSERTS MAY BE USED AS AN ALTERNATE.

THE PERMITTED THREADED INSERTS SHALL BE GROUTED BY THE CONTRACTOR IMMEDIATELY FOLLOWING REMOVAL OF THE FALSEWORK.

THE COST OF THE PERMITTED THREADED INSERTS SHALL BE INCLUDED IN THE PRICE BID FOR THE PRECAST UNITS.

GUTTERLINE ASPHALT THICKNESS & RAIL HEIGHT		
	ASPHALT OVERLAY THICKNESS	RAIL HEIGHT
	@ MID-SPAN	@ MID-SPAN
30' UNITS	2⅝"	3'-8⅝"

PROJECT NO. BP4.R014.1
HALIFAX COUNTY
STATION: 12+17.70 -L-

SHEET 3 OF 3

STATE OF NORTH CAROLINA
DEPARTMENT OF TRANSPORTATION
RALEIGH

STANDARD
3'-0" X 1'-9"
PRESTRESSED CONCRETE
CORED SLAB UNIT
90° SKEW (SPAN A)

PLAN PREPARED BY:
Founded 1998
ALPHA & OMEGA GROUP
CIVIL | STRUCTURAL | WATER RESOURCES
ALPHA AND OMEGA GROUP, PC
4601 LAKE BOONE TRAIL, SUITE 3C, RALEIGH, NC 27607
Firm License No. C-1684 www.aogroup.com

NORTH CAROLINA PROFESSIONAL SEAL 14455 ENGINEER JEDIL BARTEL

DOCUMENT NOT CONSIDERED FINAL UNLESS ALL SIGNATURES COMPLETED

REVISIONS								
NO.	BY:	DATE:	NO.	BY:	DATE:	SHEET NO.
1			3			S-9
2			4			TOTAL SHEETS
						26

ASSEMBLED BY : DM SHAUT	DATE : 12-23-21		
CHECKED BY : TG ZEBLO	DATE : 12-23-21		
DRAWN BY : DGE 5/09	REV. 5/18	MAA/THC	
CHECKED BY : BCH 6/09			

STD. NO. 21"PCS3_33_90S

$$$$$$SYSTIME$$$$$
$$$$$$$$$$$$$$$$$$$$$$$$DGN$$$$$$$$$$$$$$$$$$$$$$$$
$$$$USERNAME$$$$

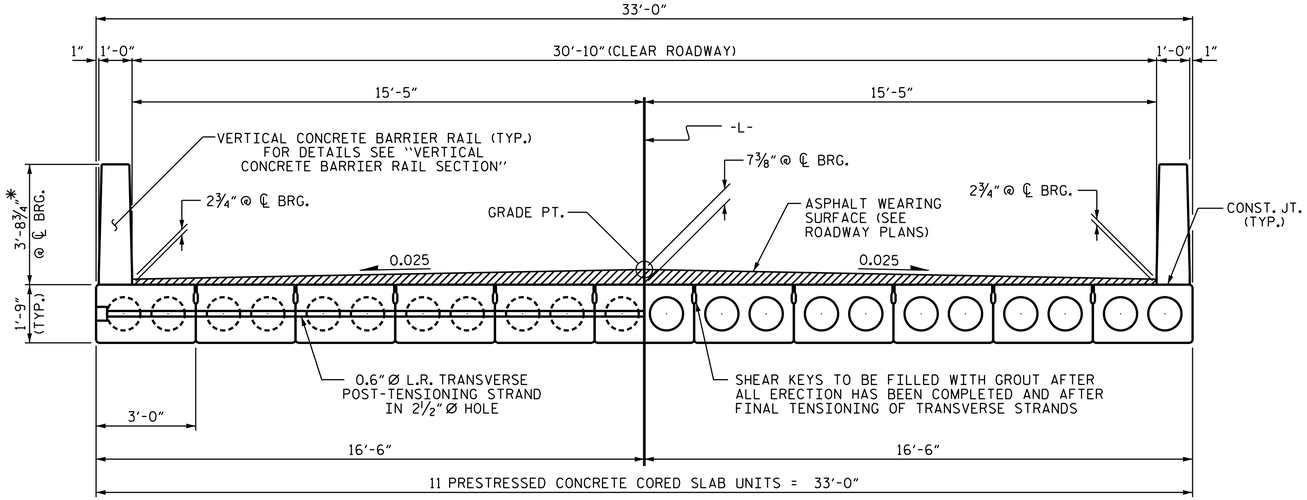

HALF SECTION AT INTERMEDIATE DIAPHRAGMS

HALF SECTION THROUGH VOIDS

TYPICAL SECTION

* - THE MAXIMUM BARRIER RAIL HEIGHT AND ASPHALT THICKNESS IS SHOWN. THE HEIGHT OF THE BARRIER RAIL AND ASPHALT THICKNESS VARIES WHILE THE TOP OF THE BARRIER RAIL FOLLOWS THE PROFILE OF THE GUTTERLINE. FOR RAIL HEIGHT DETAILS AND ASPHALT THICKNESS SEE THE "VERTICAL CONCRETE BARRIER RAIL SECTION" DETAIL.

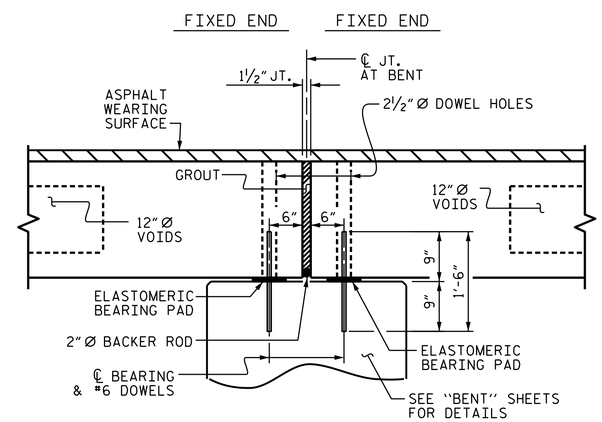

SECTION AT BENT

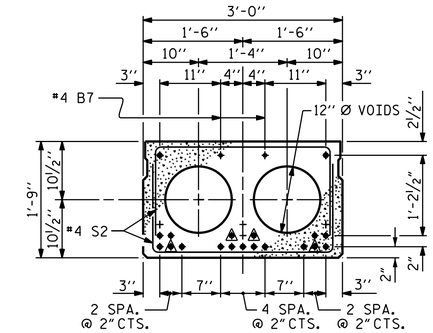

INTERIOR SLAB SECTION (55' UNIT)

(19 STRANDS REQUIRED)

0.6" Ø LOW RELAXATION STRAND LAYOUT

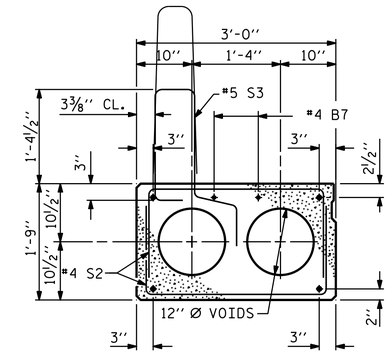

EXT. SLAB SECTION

(FOR PRESTRESSED STRAND LAYOUT, SEE INTERIOR SLAB SECTION.)

BOND SHALL BE BROKEN ON THESE STRANDS FOR A DISTANCE OF 6'-0" FROM END OF CORED SLAB UNIT. SEE STANDARD SPECIFICATIONS, ARTICLE 1078-7.

BOND SHALL BE BROKEN ON THESE STRANDS FOR A DISTANCE OF 2'-0" FROM END OF CORED SLAB UNIT. SEE STANDARD SPECIFICATIONS, ARTICLE 1078-7.

OPTIONAL FULL LENGTH DEBONDED STRANDS. THESE STRANDS ARE NOT REQUIRED. IF THE FABRICATOR CHOOSES TO INCLUDE THESE STRANDS IN THE CORED SLAB UNIT, THE STRANDS SHALL BE DEBONDED FOR THE FULL LENGTH OF THE UNIT AT NO ADDITIONAL COST. SEE STANDARD SPECIFICATIONS, ARTICLE 1078-7.

DEBONDING LEGEND

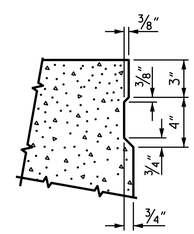

SHEAR KEY DETAIL

NOTE: OMIT SHEAR KEY ON OUTSIDE FACE OF EXTERIOR CORED SLABS.

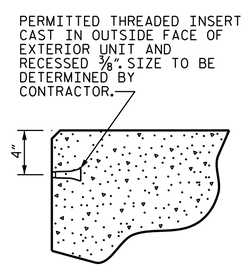

THREADED INSERT DETAIL

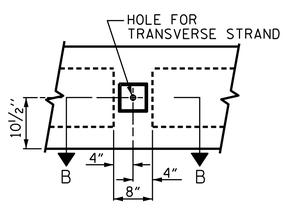

ELEVATION VIEW

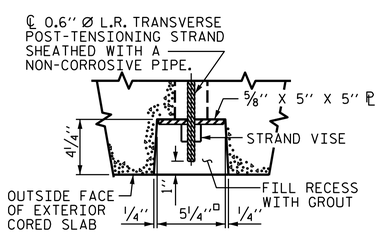

SECTION B-B

GROUTED RECESS AT END OF POST-TENSIONED STRAND OF CORED SLABS

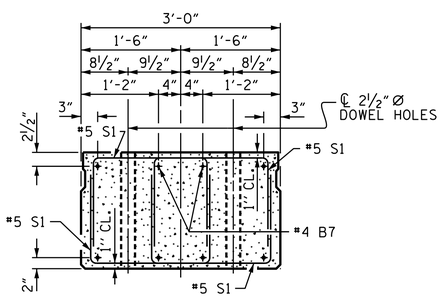

END ELEVATION

SHOWING PLACEMENT OF DOUBLE STIRRUPS AND LOCATION OF DOWEL HOLES. (STRAND LAYOUT NOT SHOWN.) INTERIOR SLAB UNIT SHOWN-EXTERIOR SLAB UNIT SIMILAR EXCEPT SHEAR KEY LOCATION.

PROJECT NO. BP4.R014.1

HALIFAX COUNTY

STATION: 12+17.70 -L-

SHEET 1 OF 3

STATE OF NORTH CAROLINA
DEPARTMENT OF TRANSPORTATION
RALEIGH

STANDARD
3'-0" X 1'-9"
PRESTRESSED CONCRETE CORED SLAB UNIT
90° SKEW (SPAN B)

PLAN PREPARED BY:

ALPHA & OMEGA GROUP
CIVIL | STRUCTURAL | WATER RESOURCES
ALPHA AND OMEGA GROUP, PC
4601 LAKE BOONE TRAIL, SUITE 3C, RALEIGH, NC 27607
Firm License No. C-1684 www.aogroup.com

NORTH CAROLINA PROFESSIONAL SEAL 14455 ENGINEER FED L. BARTELT

DOCUMENT NOT CONSIDERED FINAL UNLESS ALL SIGNATURES COMPLETED

REVISIONS							
NO.	BY:	DATE:	NO.	BY:	DATE:		
1			3				
2			4				

SHEET NO. S-10

TOTAL SHEETS 26

STD. NO. 21"PCS2_33_90S

ASSEMBLED BY : DM SHAUT		DATE : 12-23-21	
CHECKED BY : TG ZEBLO		DATE : 12-23-21	
DRAWN BY : DGE 5/09	REV. 9/14	MAA/TMG	
CHECKED BY : BCH 6/09			

$$$$$$SYSTIME$$$$$
$$$$$$$$$$$$$$$$$$$$$$DGN$$$$$$$$$$$$$$$$$$$$$$
$$$$USERNAME$$$$

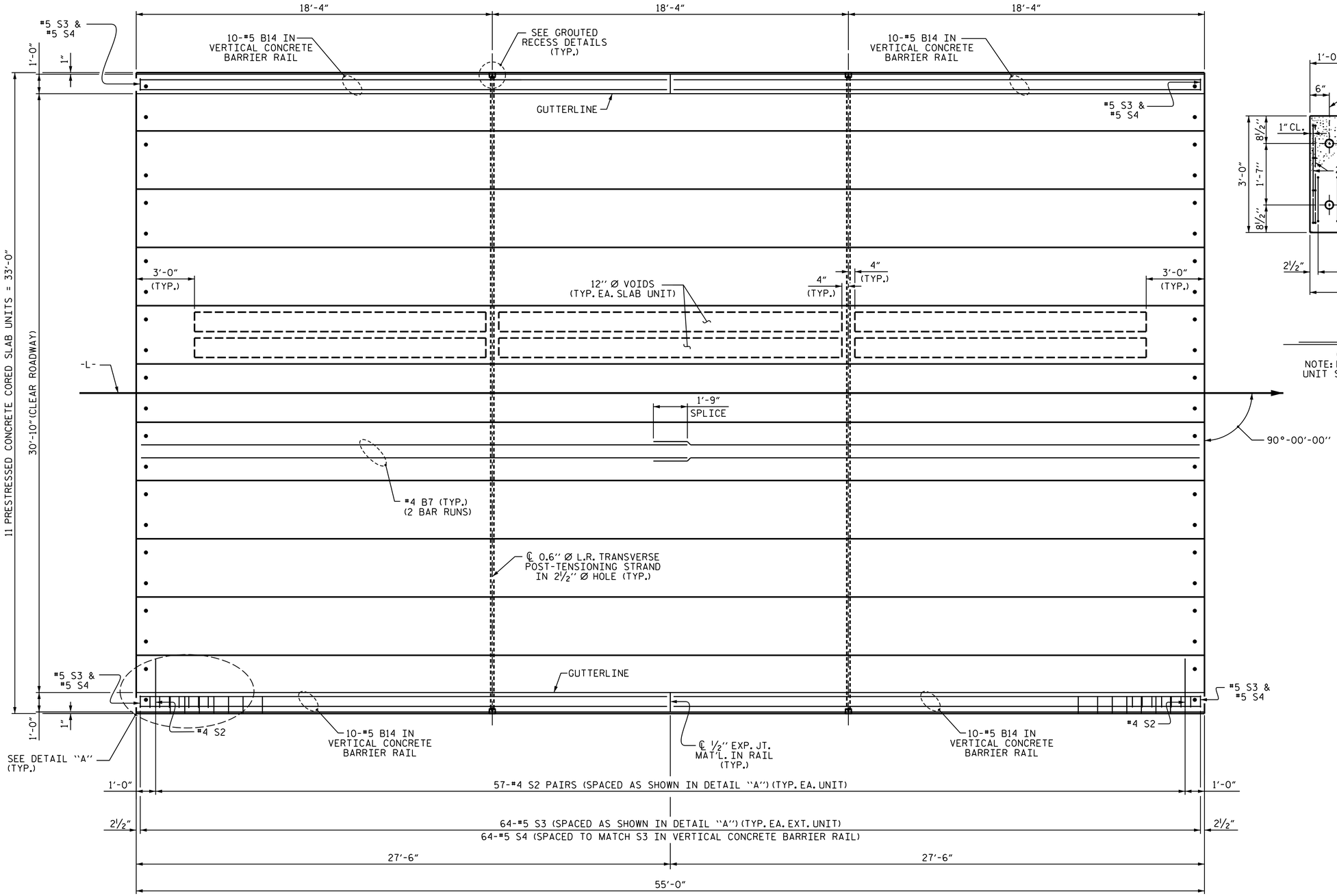

PLAN OF UNIT

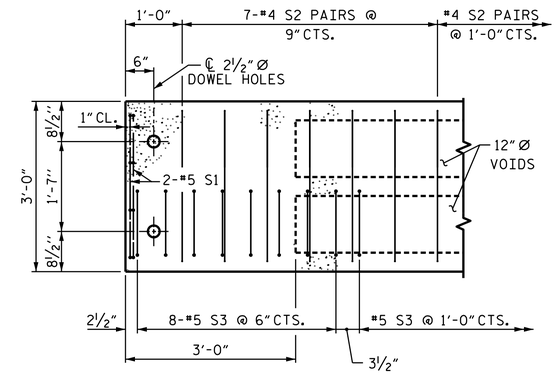

DETAIL "A"

(TYPICAL EACH END OF UNIT)
NOTE: EXTERIOR UNIT SHOWN - INTERIOR UNIT SIMILAR EXCEPT OMIT #5 S3 BARS.

PROJECT NO. BP4.R014.1
HALIFAX COUNTY
STATION: 12+17.70 -L-

SHEET 2 OF 3

STATE OF NORTH CAROLINA
DEPARTMENT OF TRANSPORTATION
RALEIGH

PLAN OF 55' UNIT
30'-10" CLEAR ROADWAY
90° SKEW
(SPAN B)

ASSEMBLED BY : DM SHAUT	DATE : 12-23-21		
CHECKED BY : TG ZEBLO	DATE : 12-23-21		
DRAWN BY : DGE 3/09	REV. 12/5/11	MAA/AAC	
CHECKED BY : BCH 3/09	REV. 8/14	MAA/TMG	

PLAN PREPARED BY:

Founded 1998

ALPHA & OMEGA GROUP
CIVIL | STRUCTURAL | WATER RESOURCES

ALPHA AND OMEGA GROUP, PC
4601 LAKE BOONE TRAIL, SUITE 3C, RALEIGH, NC 27607

Firm License No. C-1684 www.aogroup.com

THIS DRAWING REVIEWED & ADOPTED FOR USE AT THE REFERENCED LOCATION BY THE UNDERSIGNED:

NORTH CAROLINA PROFESSIONAL SEAL 14455 ENGINEER TED L. BARTELT

DOCUMENT NOT CONSIDERED FINAL UNLESS ALL SIGNATURES COMPLETED

REVISIONS							SHEET NO.
NO.	BY:	DATE:	NO.	BY:	DATE:		S-11
1			3				TOTAL SHEETS
2			4				26

STD. NO. 21" PCS_33_90S_55L

[redacted]

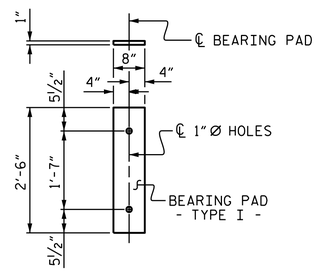

FIXED END
(TYPE I - 22 REQ'D)

ELASTOMERIC BEARING DETAILS

ELASTOMER IN ALL BEARINGS SHALL BE 50 DUROMETER HARDNESS.

GRADE 270 STRANDS	
	0.6"Ø L.R.
AREA (SQUARE INCHES)	0.217
ULTIMATE STRENGTH (LBS. PER STRAND)	58,600
APPLIED PRESTRESS (LBS. PER STRAND)	43,950

CONCRETE RELEASE STRENGTH	
UNIT	PSI
55' UNITS	4900

DEAD LOAD DEFLECTION AND CAMBER	
	3'-0" x 1'-9"
55' CORED SLAB UNIT	0.6"Ø L.R. STRAND
CAMBER (SLAB ALONE IN PLACE)	1½" ↑
DEFLECTION DUE TO SUPERIMPOSED DEAD LOAD**	⅜" ↓
FINAL CAMBER	1⅛" ↑

** INCLUDES FUTURE WEARING SURFACE

CORED SLABS REQUIRED			
	NUMBER	LENGTH	TOTAL LENGTH
55' UNIT			
EXTERIOR C.S.	2	55'-0"	110'-0"
INTERIOR C.S.	9	55'-0"	495'-0"
TOTAL	11		605'-0"

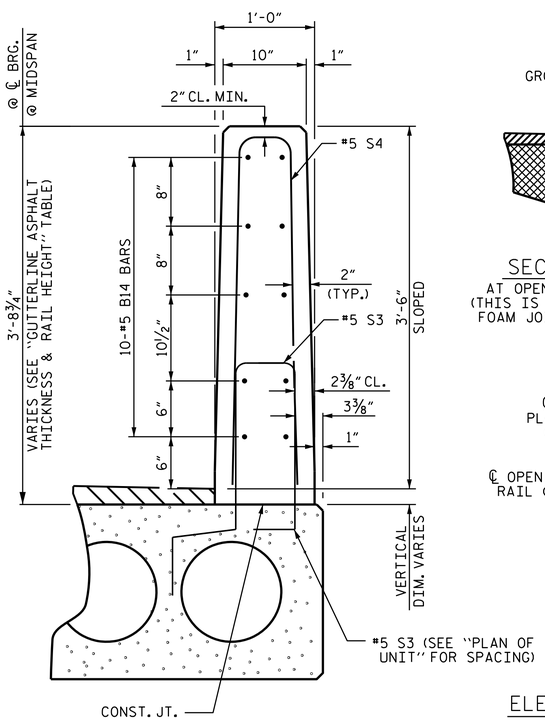

VERTICAL CONCRETE BARRIER RAIL SECTION

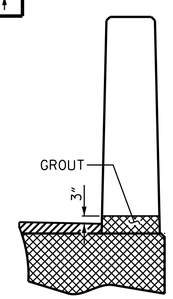

SECTION T-T
AT OPEN JOINT AT BENT
(THIS IS TO BE USED WHERE FOAM JOINT IS NOT USED)

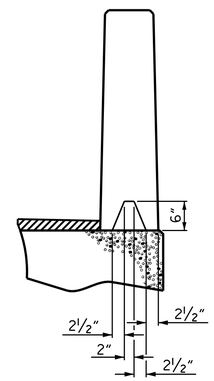

SECTION S-S
AT DAM IN OPEN JOINT
(THIS IS TO BE USED ONLY WHEN SLIP FORM IS USED)

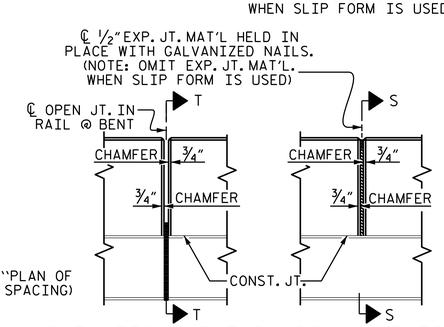

ELEVATION AT EXPANSION JOINTS

BAR TYPES

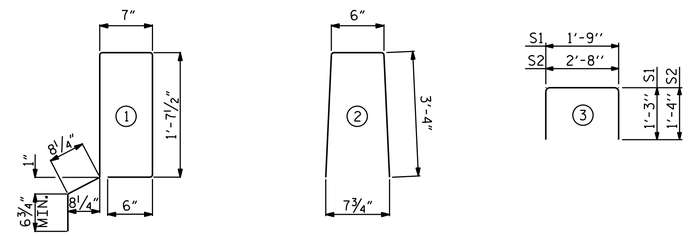

ALL BAR DIMENSIONS ARE OUT TO OUT

BILL OF MATERIAL FOR VERTICAL CONCRETE BARRIER RAIL

BAR	BARS PER PAIR OF EXTERIOR UNITS	TOTAL NO.	SIZE	TYPE	LENGTH	WEIGHT
	55' UNIT					
*B14	40	40	#5	STR	27'-1"	1130
* S4	128	128	#5	2	7'-2"	957
* EPOXY COATED REINFORCING STEEL				LBS.		2087
CLASS AA CONCRETE				CU.YDS.		14.1
TOTAL VERTICAL CONCRETE BARRIER RAIL				LN. FT.		110.25

BILL OF MATERIAL FOR ONE 55' CORED SLAB UNIT

				EXTERIOR UNIT		INTERIOR UNIT	
BAR	NUMBER	SIZE	TYPE	LENGTH	WEIGHT	LENGTH	WEIGHT
B7	4	#4	STR	28'-3"	75	28'-3"	75
S1	8	#5	3	4'-3"	35	4'-3"	35
S2	114	#4	3	5'-4"	406	5'-4"	406
* S3	64	#5	1	5'-7"	373		
REINFORCING STEEL			LBS.		516		516
* EPOXY COATED REINFORCING STEEL			LBS.		373		
6500 P.S.I. CONCRETE			CU. YDS.		7.8		7.8
0.6"Ø L.R. STRANDS			No.		19		19

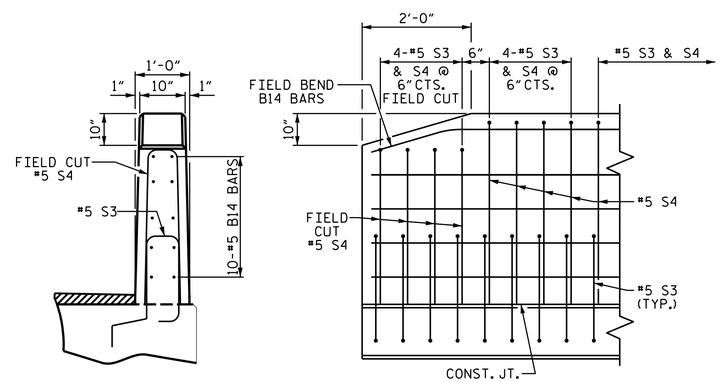

END VIEW

SIDE VIEW

END OF RAIL DETAILS

NOTES

ALL PRESTRESSING STRANDS SHALL BE 7-WIRE LOW RELAXATION GRADE 270 STRANDS AND SHALL CONFORM TO AASHTO M203 EXCEPT FOR SAMPLING REQUIREMENTS WHICH SHALL BE IN ACCORDANCE WITH THE STANDARD SPECIFICATIONS.

ALL REINFORCING STEEL CAST WITH THE CORED SLAB SECTIONS SHALL BE GRADE 60 AND SHALL BE INCLUDED IN THE UNIT PRICE BID FOR PRESTRESSED CONCRETE CORED SLABS.

RECESSES FOR TRANSVERSE STRANDS SHALL BE GROUTED AFTER THE TENSIONING OF THE STRANDS.

THE 2½"Ø DOWEL HOLES AT FIXED ENDS OF SLAB SECTIONS SHALL BE FILLED WITH NON-SHRINK GROUT.

THE BACKER RODS SHALL CONFORM TO THE REQUIREMENTS OF TYPE M BOND BREAKER. SEE SECTION 1028 OF THE STANDARD SPECIFICATIONS.

WHEN CORED SLABS ARE CAST, AN INTERNAL HOLD-DOWN SYSTEM SHALL BE EMPLOYED TO PREVENT VOIDS FROM RISING OR MOVING SIDEWAYS. AT LEAST SIX WEEKS PRIOR TO CASTING CORED SLABS, THE CONTRACTOR SHALL SUBMIT TO THE ENGINEER FOR REVIEW AND COMMENT, DETAILED DRAWINGS OF THE PROPOSED HOLD-DOWN SYSTEM. IN ADDITION TO STRUCTURAL DETAILS, LOCATION AND SPACING OF THE HOLD-DOWNS SHALL BE INDICATED.

ALL REINFORCING STEEL IN THE VERTICAL CONCRETE BARRIER RAIL SHALL BE EPOXY COATED.

PRESTRESSING STRANDS SHALL BE CUT FLUSH WITH THE CORED SLAB UNIT ENDS.

APPLY EPOXY PROTECTIVE COATING TO CORED SLAB UNIT ENDS.

GROOVED CONTRACTION JOINTS, ½" IN DEPTH, SHALL BE TOOLED IN ALL EXPOSED FACES OF THE BARRIER RAIL AND IN ACCORDANCE WITH ARTICLE 825-10(B) OF THE STANDARD SPECIFICATIONS. A CONTRACTION JOINT SHALL BE LOCATED AT EACH THIRD POINT BETWEEN BARRIER RAIL EXPANSION JOINTS. ONLY ONE CONTRACTION JOINT IS REQUIRED AT MIDPOINT OF BARRIER RAIL SEGMENTS LESS THAN 20 FEET IN LENGTH AND NO CONTRACTION JOINTS ARE REQUIRED FOR THOSE SEGMENTS LESS THAN 10 FEET IN LENGTH.

FLAME CUTTING OF THE TRANSVERSE POST-TENSIONING STRAND IS NOT ALLOWED.

THE TRANSFER OF LOAD FROM THE ANCHORAGES TO THE CORED SLAB UNIT SHALL BE DONE WHEN THE CONCRETE HAS REACHED A COMPRESSIVE STRENGTH OF NOT LESS THAN THE REQUIRED STRENGTH SHOWN IN THE "CONCRETE RELEASE STRENGTH" TABLE.

FOR GROUT FOR STRUCTURES, SEE SPECIAL PROVISIONS.

THE PERMITTED THREADED INSERTS ARE DETAILED AS AN OPTION FOR THE CONTRACTOR TO ATTACH FALSEWORK AND FORMWORK DURING CONSTRUCTION.

THE PERMITTED THREADED INSERTS IN THE EXTERIOR UNITS SHALL BE SIZED BY THE CONTRACTOR, SPACED AT 4'-0" CENTERS AND GALVANIZED IN ACCORDANCE WITH SECTION 1076 OF THE STANDARD SPECIFICATIONS. STAINLESS STEEL THREADED INSERTS MAY BE USED AS AN ALTERNATE.

THE PERMITTED THREADED INSERTS SHALL BE GROUTED BY THE CONTRACTOR IMMEDIATELY FOLLOWING REMOVAL OF THE FALSEWORK.

THE COST OF THE PERMITTED THREADED INSERTS SHALL BE INCLUDED IN THE PRICE BID FOR THE PRECAST UNITS.

GUTTERLINE ASPHALT THICKNESS & RAIL HEIGHT		
	ASPHALT OVERLAY THICKNESS	RAIL HEIGHT
	@ MID-SPAN	@ MID-SPAN
55' UNITS	1⅝"	3'-7⅝"

PROJECT NO. BP4.R014.1
HALIFAX COUNTY
STATION: 12+17.70 -L-

SHEET 3 OF 3

STATE OF NORTH CAROLINA
DEPARTMENT OF TRANSPORTATION
RALEIGH

STANDARD
3'-0" X 1'-9"
PRESTRESSED CONCRETE
CORED SLAB UNIT
90° SKEW (SPAN B)

NORTH CAROLINA PROFESSIONAL SEAL 14455 ENGINEER TED L. BARTELT

PLAN PREPARED BY:
Founded 1998
ALPHA & OMEGA GROUP
CIVIL | STRUCTURAL | WATER RESOURCES
ALPHA AND OMEGA GROUP, PC
4601 LAKE BOONE TRAIL, SUITE 3C, RALEIGH, NC 27607
Firm License No. C-1684 www.aogroup.com

DOCUMENT NOT CONSIDERED FINAL UNLESS ALL SIGNATURES COMPLETED

REVISIONS								SHEET NO.
NO.	BY:	DATE:	NO.	BY:	DATE:			S-12
1			3					TOTAL SHEETS
2			4					26

ASSEMBLED BY : DM SHAUT	DATE : 12-23-21		
CHECKED BY : TG ZEBLO	DATE : 12-23-21		
DRAWN BY : DGE 5/09	REV. 5/18	MAA/THC	
CHECKED BY : BCH 6/09			

$$$$$$SYSTIME$$$$$
$$$$$$$$$$$$$$$$$$$$DGN$$$$$$$$$$$$$$$$$$$$$$
$$$$USERNAME$$$$

STD. NO. 21"PCS3_33_90S

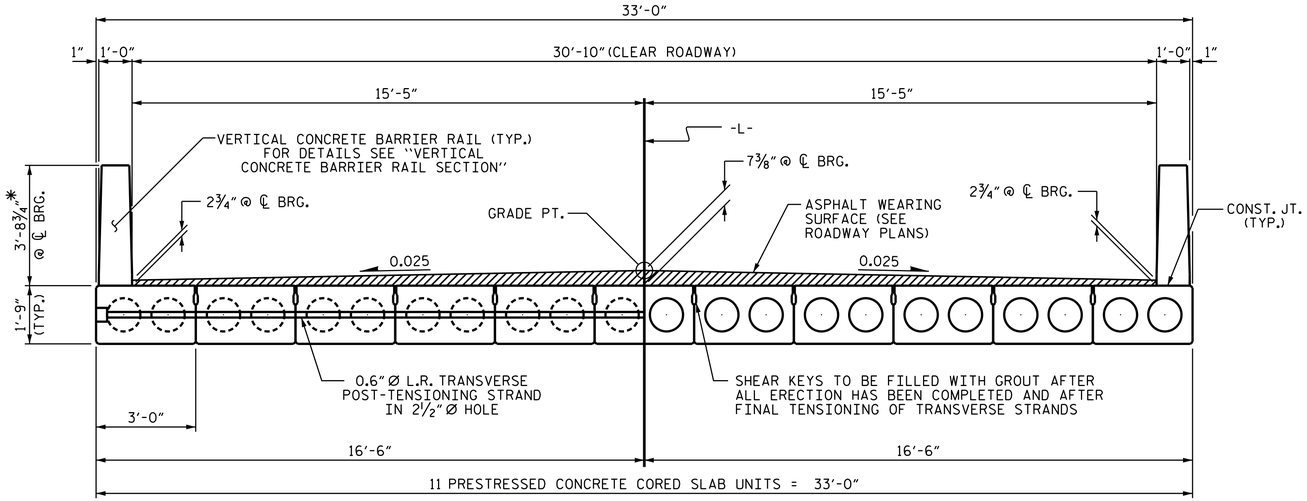

HALF SECTION AT INTERMEDIATE DIAPHRAGMS

HALF SECTION THROUGH VOIDS

TYPICAL SECTION

* - THE MAXIMUM BARRIER RAIL HEIGHT AND ASPHALT THICKNESS IS SHOWN. THE HEIGHT OF THE BARRIER RAIL AND ASPHALT THICKNESS VARIES WHILE THE TOP OF THE BARRIER RAIL FOLLOWS THE PROFILE OF THE GUTTERLINE. FOR RAIL HEIGHT DETAILS AND ASPHALT THICKNESS SEE THE "VERTICAL CONCRETE BARRIER RAIL SECTION" DETAIL.

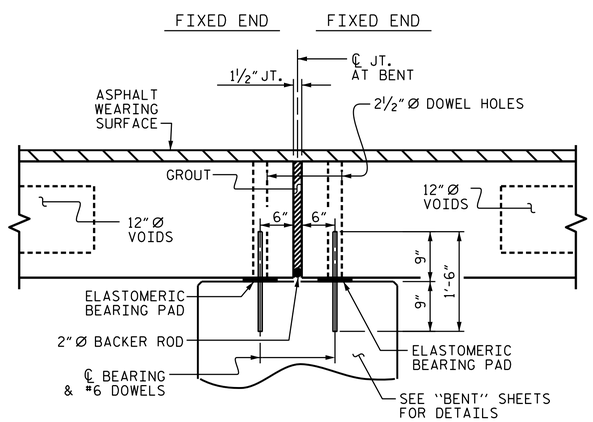

SECTION AT BENT

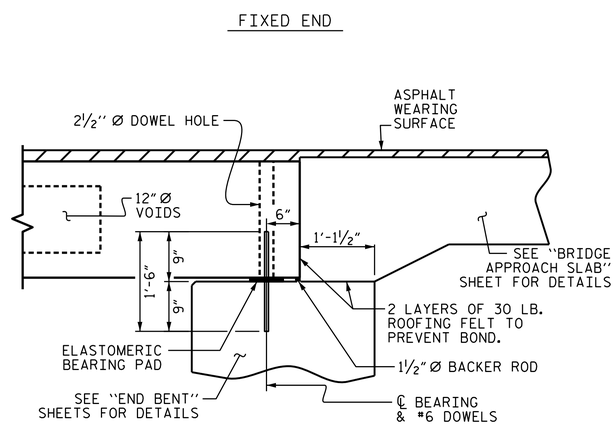

SECTION AT END BENT

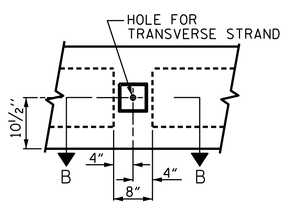

ELEVATION VIEW

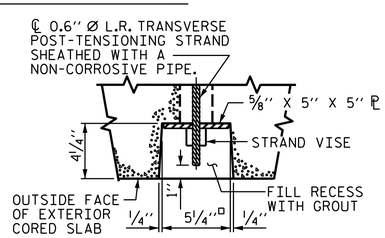

SECTION B-B

GROUTED RECESS AT END OF POST-TENSIONED STRAND OF CORED SLABS

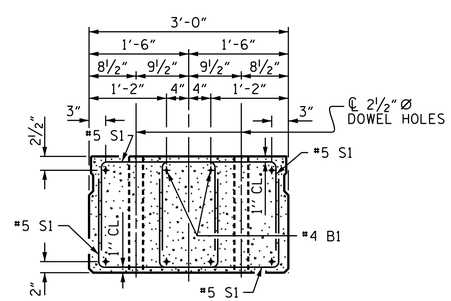

END ELEVATION

SHOWING PLACEMENT OF DOUBLE STIRRUPS AND LOCATION OF DOWEL HOLES. (STRAND LAYOUT NOT SHOWN.) INTERIOR SLAB UNIT SHOWN-EXTERIOR SLAB UNIT SIMILAR EXCEPT SHEAR KEY LOCATION.

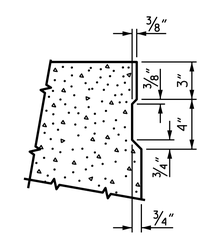

SHEAR KEY DETAIL

NOTE: OMIT SHEAR KEY ON OUTSIDE FACE OF EXTERIOR CORED SLABS.

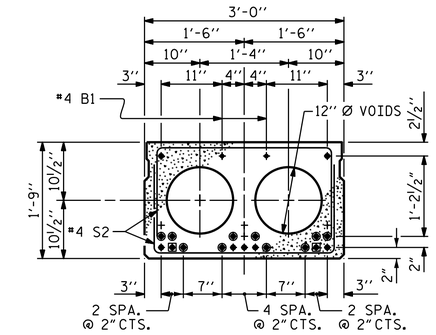

INTERIOR SLAB SECTION (25' UNIT)

(9 STRANDS REQUIRED)

0.6" Ø LOW RELAXATION STRAND LAYOUT

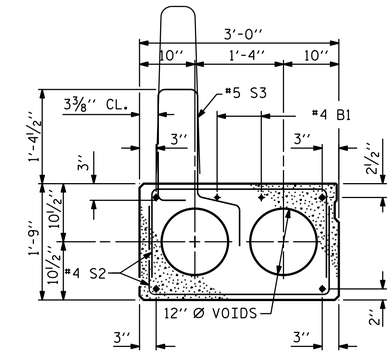

EXT. SLAB SECTION

(FOR PRESTRESSED STRAND LAYOUT, SEE INTERIOR SLAB SECTION.)

~~BOND SHALL BE BROKEN ON THESE STRANDS FOR A DISTANCE OF 6'-0" FROM END OF CORED SLAB UNIT. SEE STANDARD SPECIFICATIONS, ARTICLE 1078-7.~~

BOND SHALL BE BROKEN ON THESE STRANDS FOR A DISTANCE OF 2'-0" FROM END OF CORED SLAB UNIT. SEE STANDARD SPECIFICATIONS, ARTICLE 1078-7.

OPTIONAL FULL LENGTH DEBONDED STRANDS. THESE STRANDS ARE NOT REQUIRED. IF THE FABRICATOR CHOOSES TO INCLUDE THESE STRANDS IN THE CORED SLAB UNIT, THE STRANDS SHALL BE DEBONDED FOR THE FULL LENGTH OF THE UNIT AT NO ADDITIONAL COST. SEE STANDARD SPECIFICATIONS, ARTICLE 1078-7.

DEBONDING LEGEND

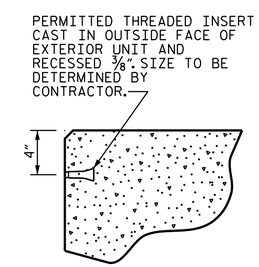

THREADED INSERT DETAIL

PROJECT NO. BP4.R014.1

HALIFAX COUNTY

STATION: 12+17.70 -L-

SHEET 1 OF 3

STATE OF NORTH CAROLINA
DEPARTMENT OF TRANSPORTATION
RALEIGH

STANDARD
3'-0" X 1'-9"
PRESTRESSED CONCRETE CORED SLAB UNIT
90° SKEW (SPAN C)

PLAN PREPARED BY:

ALPHA & OMEGA GROUP
CIVIL | STRUCTURAL | WATER RESOURCES
ALPHA AND OMEGA GROUP, PC
4601 LAKE BOONE TRAIL, SUITE 3C, RALEIGH, NC 27607
Firm License No. C-1684 www.aogroup.com

NORTH CAROLINA PROFESSIONAL SEAL 14455 ENGINEER F.D.L. BARTELT

DOCUMENT NOT CONSIDERED FINAL UNLESS ALL SIGNATURES COMPLETED

REVISIONS							SHEET NO.
NO.	BY:	DATE:	NO.	BY:	DATE:		S-13
1			3				TOTAL SHEETS
2			4				26

ASSEMBLED BY : DM SHAUT	DATE : 12-23-21	
CHECKED BY : TG ZEBLO	DATE : 12-23-21	
DRAWN BY : DGE 5/09	REV. 9/14	MAA/TMG
CHECKED BY : BCH 6/09		

STD. NO. 21"PCS2_33_90S

$$$$$$SYSTIME$$$$$
$$$$$$$$$$$$$$$$$$$$$$DGN$$$$$$$$$$$$$$$$$$$$$$
$$$$USERNAME$$$$

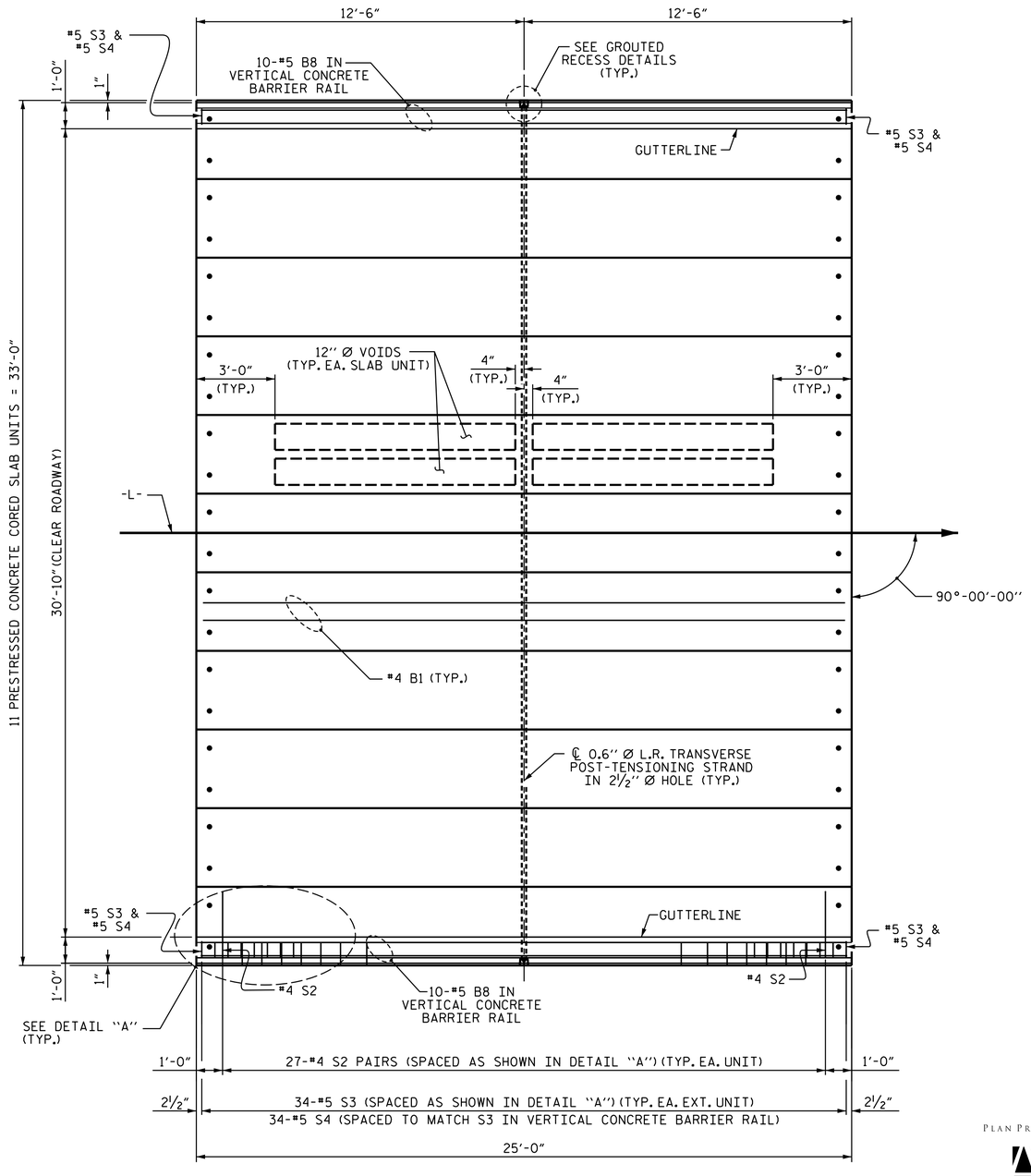

PLAN OF UNIT

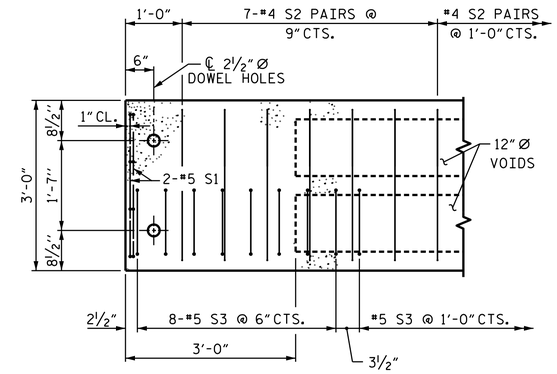

DETAIL "A"

(TYPICAL EACH END OF UNIT)
NOTE: EXTERIOR UNIT SHOWN - INTERIOR UNIT SIMILAR EXCEPT OMIT #5 S3 BARS.

PROJECT NO. BP4.R014.1
HALIFAX COUNTY
STATION: 12+17.70 -L-

SHEET 2 OF 3

STATE OF NORTH CAROLINA
DEPARTMENT OF TRANSPORTATION
RALEIGH

PLAN OF 25' UNIT
30'-10" CLEAR ROADWAY
90° SKEW
(SPAN C)

ASSEMBLED BY : DM SHAUT	DATE : 12-23-21		
CHECKED BY : TG ZEBLO	DATE : 12-23-21		
DRAWN BY : DGE 3/09	REV. 12/5/11	MAA/AAC	
CHECKED BY : BCH 3/09	REV. 8/14	MAA/TMG	

PLAN PREPARED BY:

Founded 1998

ALPHA & OMEGA GROUP
CIVIL | STRUCTURAL | WATER RESOURCES

ALPHA AND OMEGA GROUP, PC
4601 LAKE BOONE TRAIL, SUITE 3C, RALEIGH, NC 27607

Firm License No. C-1684 www.aogroup.com

THIS DRAWING REVIEWED & ADOPTED FOR USE AT THE REFERENCED LOCATION BY THE UNDERSIGNED:

NORTH CAROLINA PROFESSIONAL SEAL 14455 ENGINEER TED L. BARTELT

DOCUMENT NOT CONSIDERED FINAL UNLESS ALL SIGNATURES COMPLETED

REVISIONS						SHEET NO.
NO.	BY:	DATE:	NO.	BY:	DATE:	S-14
1			3			TOTAL SHEETS
2			4			26

STD. NO. 21" PCS_33_90S_25L

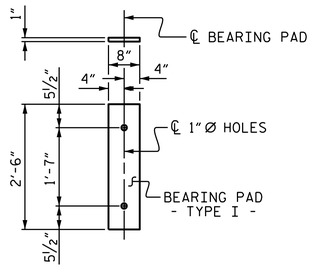

FIXED END
(TYPE I - 22 REQ'D)

ELASTOMERIC BEARING DETAILS

ELASTOMER IN ALL BEARINGS SHALL BE 50 DUROMETER HARDNESS.

GRADE 270 STRANDS	
	0.6"Ø L.R.
AREA (SQUARE INCHES)	0.217
ULTIMATE STRENGTH (LBS. PER STRAND)	58,600
APPLIED PRESTRESS (LBS. PER STRAND)	43,950

CONCRETE RELEASE STRENGTH	
UNIT	PSI
25' UNITS	4000

DEAD LOAD DEFLECTION AND CAMBER	
	3'-0" x 1'-9"
25' CORED SLAB UNIT	0.6"Ø L.R. STRAND
CAMBER (SLAB ALONE IN PLACE)	¼" ↑
DEFLECTION DUE TO SUPERIMPOSED DEAD LOAD**	⅛" ↓
FINAL CAMBER	⅛" ↑

** INCLUDES FUTURE WEARING SURFACE

CORED SLABS REQUIRED			
	NUMBER	LENGTH	TOTAL LENGTH
25' UNIT			
EXTERIOR C.S.	2	25'-0"	50'-0"
INTERIOR C.S.	9	25'-0"	225'-0"
TOTAL	11		275'-0"

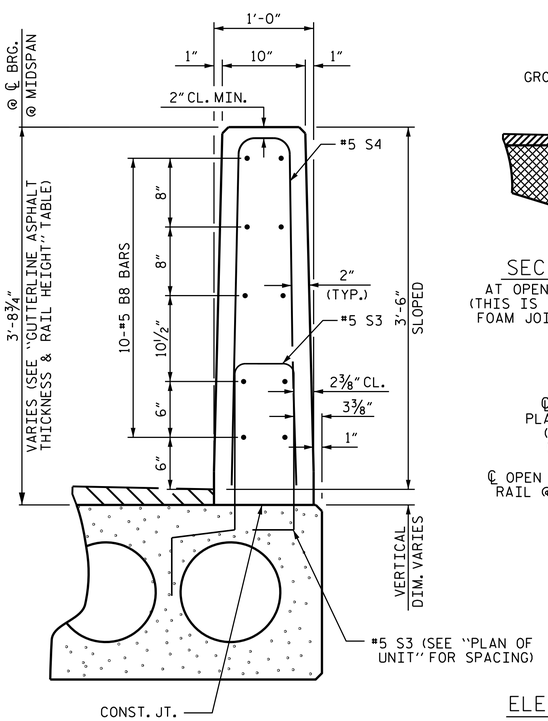

VERTICAL CONCRETE BARRIER RAIL SECTION

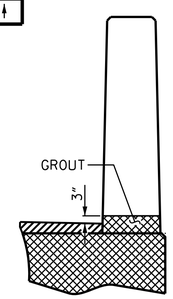

SECTION T-T
AT OPEN JOINT AT BENT
(THIS IS TO BE USED WHERE FOAM JOINT IS NOT USED)

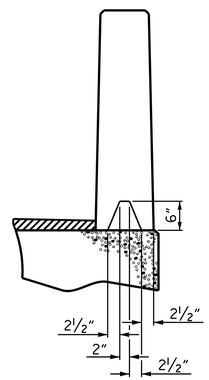

SECTION S-S
AT DAM IN OPEN JOINT
(THIS IS TO BE USED ONLY WHEN SLIP FORM IS USED)

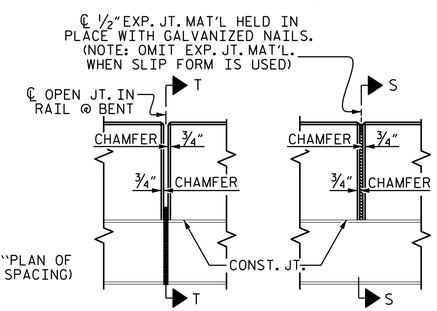

ELEVATION AT EXPANSION JOINTS

BAR TYPES

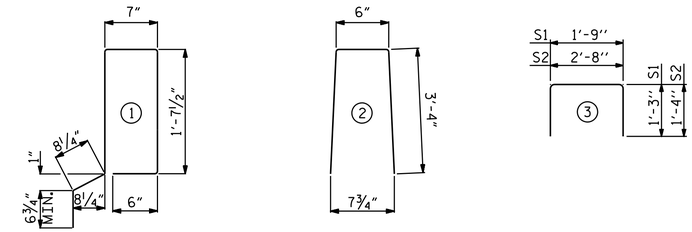

ALL BAR DIMENSIONS ARE OUT TO OUT

BILL OF MATERIAL FOR VERTICAL CONCRETE BARRIER RAIL

BAR	BARS PER PAIR OF EXTERIOR UNITS	TOTAL NO.	SIZE	TYPE	LENGTH	WEIGHT
	25' UNIT					
* B8	20	20	#5	STR	24'-7"	513
* S4	68	68	#5	2	7'-2"	508
* EPOXY COATED REINFORCING STEEL				LBS.		1021
CLASS AA CONCRETE				CU.YDS.		6.4
TOTAL VERTICAL CONCRETE BARRIER RAIL				LN. FT.		50.25

BILL OF MATERIAL FOR ONE 25' CORED SLAB UNIT

				EXTERIOR UNIT		INTERIOR UNIT	
BAR	NUMBER	SIZE	TYPE	LENGTH	WEIGHT	LENGTH	WEIGHT
B1	2	#4	STR	24'-8"	33	24'-8"	33
S1	8	#5	3	4'-3"	35	4'-3"	35
S2	54	#4	3	5'-4"	192	5'-4"	192
* S3	34	#5	1	5'-7"	198		
REINFORCING STEEL		LBS.		260		260	
* EPOXY COATED REINFORCING STEEL		LBS.		198			
5000 P.S.I. CONCRETE		CU. YDS.		3.7		3.7	
0.6"Ø L.R. STRANDS		No.		9		9	

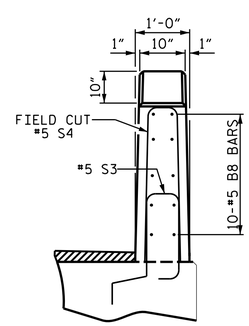

END VIEW

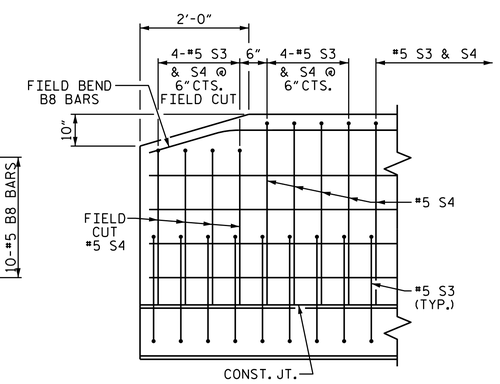

SIDE VIEW

END OF RAIL DETAILS

NOTES

ALL PRESTRESSING STRANDS SHALL BE 7-WIRE LOW RELAXATION GRADE 270 STRANDS AND SHALL CONFORM TO AASHTO M203 EXCEPT FOR SAMPLING REQUIREMENTS WHICH SHALL BE IN ACCORDANCE WITH THE STANDARD SPECIFICATIONS.

ALL REINFORCING STEEL CAST WITH THE CORED SLAB SECTIONS SHALL BE GRADE 60 AND SHALL BE INCLUDED IN THE UNIT PRICE BID FOR PRESTRESSED CONCRETE CORED SLABS.

RECESSES FOR TRANSVERSE STRANDS SHALL BE GROUTED AFTER THE TENSIONING OF THE STRANDS.

THE 2½"Ø DOWEL HOLES AT FIXED ENDS OF SLAB SECTIONS SHALL BE FILLED WITH NON-SHRINK GROUT.

THE BACKER RODS SHALL CONFORM TO THE REQUIREMENTS OF TYPE M BOND BREAKER. SEE SECTION 1028 OF THE STANDARD SPECIFICATIONS.

WHEN CORED SLABS ARE CAST, AN INTERNAL HOLD-DOWN SYSTEM SHALL BE EMPLOYED TO PREVENT VOIDS FROM RISING OR MOVING SIDEWAYS. AT LEAST SIX WEEKS PRIOR TO CASTING CORED SLABS, THE CONTRACTOR SHALL SUBMIT TO THE ENGINEER FOR REVIEW AND COMMENT, DETAILED DRAWINGS OF THE PROPOSED HOLD-DOWN SYSTEM. IN ADDITION TO STRUCTURAL DETAILS, LOCATION AND SPACING OF THE HOLD-DOWNS SHALL BE INDICATED.

ALL REINFORCING STEEL IN THE VERTICAL CONCRETE BARRIER RAIL SHALL BE EPOXY COATED.

PRESTRESSING STRANDS SHALL BE CUT FLUSH WITH THE CORED SLAB UNIT ENDS.

APPLY EPOXY PROTECTIVE COATING TO CORED SLAB UNIT ENDS.

GROOVED CONTRACTION JOINTS, ½" IN DEPTH, SHALL BE TOOLED IN ALL EXPOSED FACES OF THE BARRIER RAIL AND IN ACCORDANCE WITH ARTICLE 825-10(B) OF THE STANDARD SPECIFICATIONS. A CONTRACTION JOINT SHALL BE LOCATED AT EACH THIRD POINT BETWEEN BARRIER RAIL EXPANSION JOINTS. ONLY ONE CONTRACTION JOINT IS REQUIRED AT MIDPOINT OF BARRIER RAIL SEGMENTS LESS THAN 20 FEET IN LENGTH AND NO CONTRACTION JOINTS ARE REQUIRED FOR THOSE SEGMENTS LESS THAN 10 FEET IN LENGTH.

FLAME CUTTING OF THE TRANSVERSE POST-TENSIONING STRAND IS NOT ALLOWED.

THE TRANSFER OF LOAD FROM THE ANCHORAGES TO THE CORED SLAB UNIT SHALL BE DONE WHEN THE CONCRETE HAS REACHED A COMPRESSIVE STRENGTH OF NOT LESS THAN THE REQUIRED STRENGTH SHOWN IN THE "CONCRETE RELEASE STRENGTH" TABLE.

FOR GROUT FOR STRUCTURES, SEE SPECIAL PROVISIONS.

THE PERMITTED THREADED INSERTS ARE DETAILED AS AN OPTION FOR THE CONTRACTOR TO ATTACH FALSEWORK AND FORMWORK DURING CONSTRUCTION.

THE PERMITTED THREADED INSERTS IN THE EXTERIOR UNITS SHALL BE SIZED BY THE CONTRACTOR, SPACED AT 4'-0" CENTERS AND GALVANIZED IN ACCORDANCE WITH SECTION 1076 OF THE STANDARD SPECIFICATIONS. STAINLESS STEEL THREADED INSERTS MAY BE USED AS AN ALTERNATE.

THE PERMITTED THREADED INSERTS SHALL BE GROUTED BY THE CONTRACTOR IMMEDIATELY FOLLOWING REMOVAL OF THE FALSEWORK.

THE COST OF THE PERMITTED THREADED INSERTS SHALL BE INCLUDED IN THE PRICE BID FOR THE PRECAST UNITS.

GUTTERLINE ASPHALT THICKNESS & RAIL HEIGHT		
	ASPHALT OVERLAY THICKNESS	RAIL HEIGHT
	@ MID-SPAN	@ MID-SPAN
25' UNITS	2⅝"	3'-8⅝"

PROJECT NO. BP4.R014.1
HALIFAX COUNTY
STATION: 12+17.70 -L-

SHEET 3 OF 3

STATE OF NORTH CAROLINA
DEPARTMENT OF TRANSPORTATION
RALEIGH

STANDARD
3'-0" X 1'-9"
PRESTRESSED CONCRETE
CORED SLAB UNIT
90° SKEW (SPAN C)

NORTH CAROLINA PROFESSIONAL SEAL 14455 ENGINEER TED L. BARTELL

PLAN PREPARED BY:
Founded 1998
ALPHA & OMEGA GROUP
CIVIL | STRUCTURAL | WATER RESOURCES
ALPHA AND OMEGA GROUP, PC
4601 LAKE BOONE TRAIL, SUITE 3C, RALEIGH, NC 27607
Firm License No. C-1684 www.aogroup.com

DOCUMENT NOT CONSIDERED FINAL UNLESS ALL SIGNATURES COMPLETED

REVISIONS							
NO.	BY:	DATE:	NO.	BY:	DATE:	SHEET NO.	
1			3			S-15	
2			4			TOTAL SHEETS	
						26	

STD. NO. 21" PCS3_33_90S

ASSEMBLED BY :	DM SHAUT	DATE :	12-23-21
CHECKED BY :	TG ZEBLO	DATE :	12-23-21
DRAWN BY :	DGE 5/09	REV. 5/18	MAA/THC
CHECKED BY :	BCH 6/09		

$$$$$$SYSTIME$$$$$
$$$$$$$$$$$$$$$$$$$$$$DGN$$$$$$$$$$$$$$$$$$$$$$
$$$$USERNAME$$$$

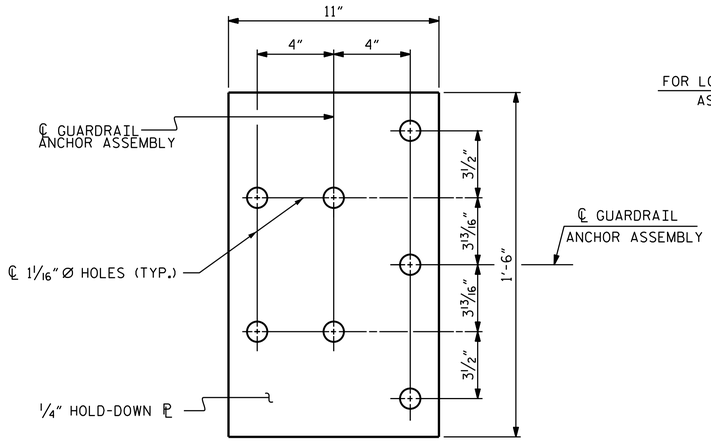

PLAN

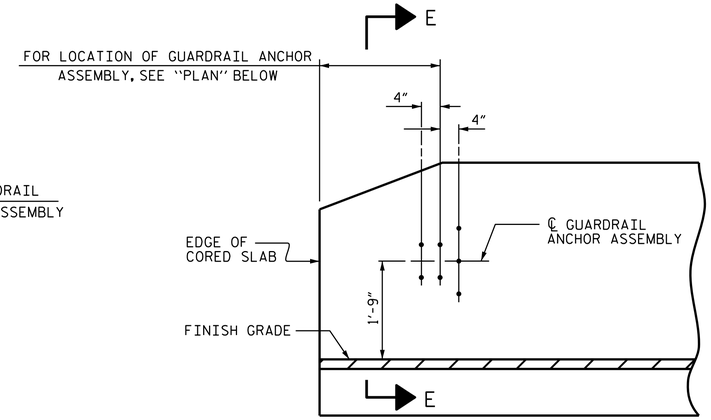

ELEVATION

NOTES

THE GUARDRAIL ANCHOR ASSEMBLY SHALL CONSIST OF A 1/4" HOLD DOWN PLATE AND 7 - 7/8" Ø BOLTS WITH NUTS AND WASHERS.

THE HOLD-DOWN PLATE SHALL CONFORM TO AASHTO M270 GRADE 36. AFTER FABRICATION, THE HOLD-DOWN PLATE SHALL BE HOT-DIP GALVANIZED IN ACCORDANCE WITH AASHTO M111.

BOLTS SHALL CONFORM TO THE REQUIREMENTS OF ASTM A307 AND NUTS SHALL CONFORM TO THE REQUIREMENTS OF AASHTO M291. BOLTS, NUTS AND WASHERS SHALL BE GALVANIZED. (AT THE CONTRACTOR'S OPTION, STAINLESS STEEL BOLTS, NUTS AND WASHERS MAY BE USED AS AN ALTERNATE FOR THE 7/8" Ø GALVANIZED BOLTS, NUTS AND WASHERS. THEY SHALL CONFORM TO OR EXCEED THE MECHANICAL REQUIREMENTS OF ASTM A307. THE USE OF THIS ALTERNATE SHALL BE APPROVED BY THE ENGINEER.)

THE GUARDRAIL ANCHOR ASSEMBLY IS REQUIRED AT ALL POINTS WHERE APPROACH GUARDRAIL IS TO BE ATTACHED TO THE END OF BARRIER RAIL. FOR POINTS OF ATTACHMENT, SEE SKETCH.

AFTER INSTALLATION, THE EXPOSED THREAD OF THE BOLT SHALL BE BURRED WITH A SHARP POINTED TOOL.

THE COST OF THE GUARDRAIL ANCHOR ASSEMBLY SHALL BE INCLUDED IN THE UNIT CONTRACT PRICE BID FOR VERTICAL CONCRETE BARRIER RAIL.

THE VERTICAL REINFORCING BARS MAY BE SHIFTED SLIGHTLY IN THE VERTICAL CONCRETE BARRIER RAIL TO CLEAR ASSEMBLY BOLTS.

THE 1 1/4" Ø HOLES SHALL BE FORMED OR DRILLED WITH A CORE BIT. IMPACT TOOLS WILL NOT BE PERMITTED. ANY CONCRETE DAMAGED BY THIS WORK SHALL BE REPAIRED TO THE SATISFACTION OF THE ENGINEER.

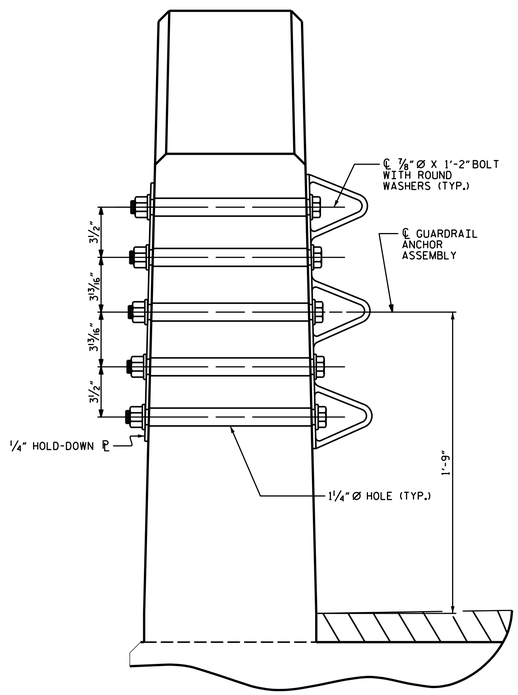

SECTION E-E

GUARDRAIL ANCHOR ASSEMBLY DETAILS

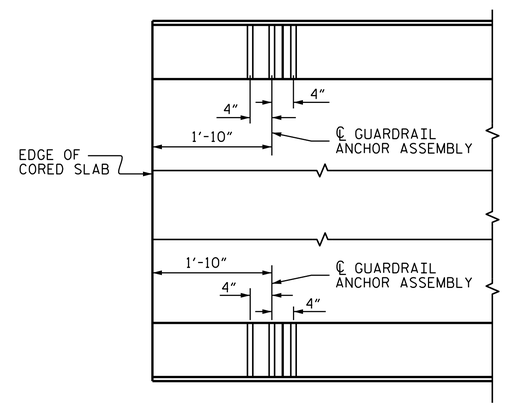

PLAN

LOCATION OF ANCHORS FOR GUARDRAIL

END BENT #1 SHOWN, END BENT #2 SIMILAR.

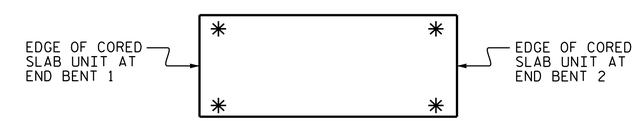

SKETCH SHOWING POINTS OF ATTACHMENT

✳ DENOTES GUARDRAIL ANCHOR ASSEMBLY

PROJECT NO. BP4.R014.1

HALIFAX COUNTY

STATION: 12+17.70

ASSEMBLED BY : DM SHAUT		DATE : 12-23-21	
CHECKED BY : TG ZEBLO		DATE : 12-23-21	
DRAWN BY : MAA 5/10	REV. 1/15	MAA/TMG	
CHECKED BY : GM 5/10	REV. 12/17	MAA/THC	
	REV. 5/18	MAA/THC	

PLAN PREPARED BY:

Founded 1998

ALPHA & OMEGA GROUP
CIVIL | STRUCTURAL | WATER RESOURCES

ALPHA AND OMEGA GROUP, PC
4601 LAKE BOONE TRAIL, SUITE 3C, RALEIGH, NC 27607

Firm License No. C-1684 www.aogroup.com

THIS DRAWING REVIEWED & ADOPTED FOR USE AT THE REFERENCED LOCATION BY THE UNDERSIGNED:

NORTH CAROLINA PROFESSIONAL SEAL 14455 ENGINEER TED L. BARTELL

DOCUMENT NOT CONSIDERED FINAL UNLESS ALL SIGNATURES COMPLETED

STATE OF NORTH CAROLINA
DEPARTMENT OF TRANSPORTATION
RALEIGH

STANDARD
GUARDRAIL ANCHORAGE DETAILS
FOR VERTICAL CONCRETE BARRIER RAIL

REVISIONS						SHEET NO.
NO.	BY:	DATE:	NO.	BY:	DATE:	S-16
1			3			TOTAL SHEETS
2			4			26

STD. NO. GRA3

$$$$$$SYSTIME$$$$$
$$$$$$$$$$$$$$$$$$$$DGN$$$$$$$$$$$$$$$$$$$$$$$$
$$$$USERNAME$$$$

NOTES

STIRRUPS IN CAP MAY BE SHIFTED AS NECESSARY TO CLEAR DOWELS.

THE CONCRETE IN THE SHADED AREA OF THE WING SHALL BE POURED AFTER THE VERTICAL CONCRETE BARRIER RAIL IS CAST IF SLIP FORMING IS USED.

FOR PILE SPLICE DETAILS, SEE SHEET 4 OF 4.

FOR WING DETAILS, SEE SHEET 3 OF 4.

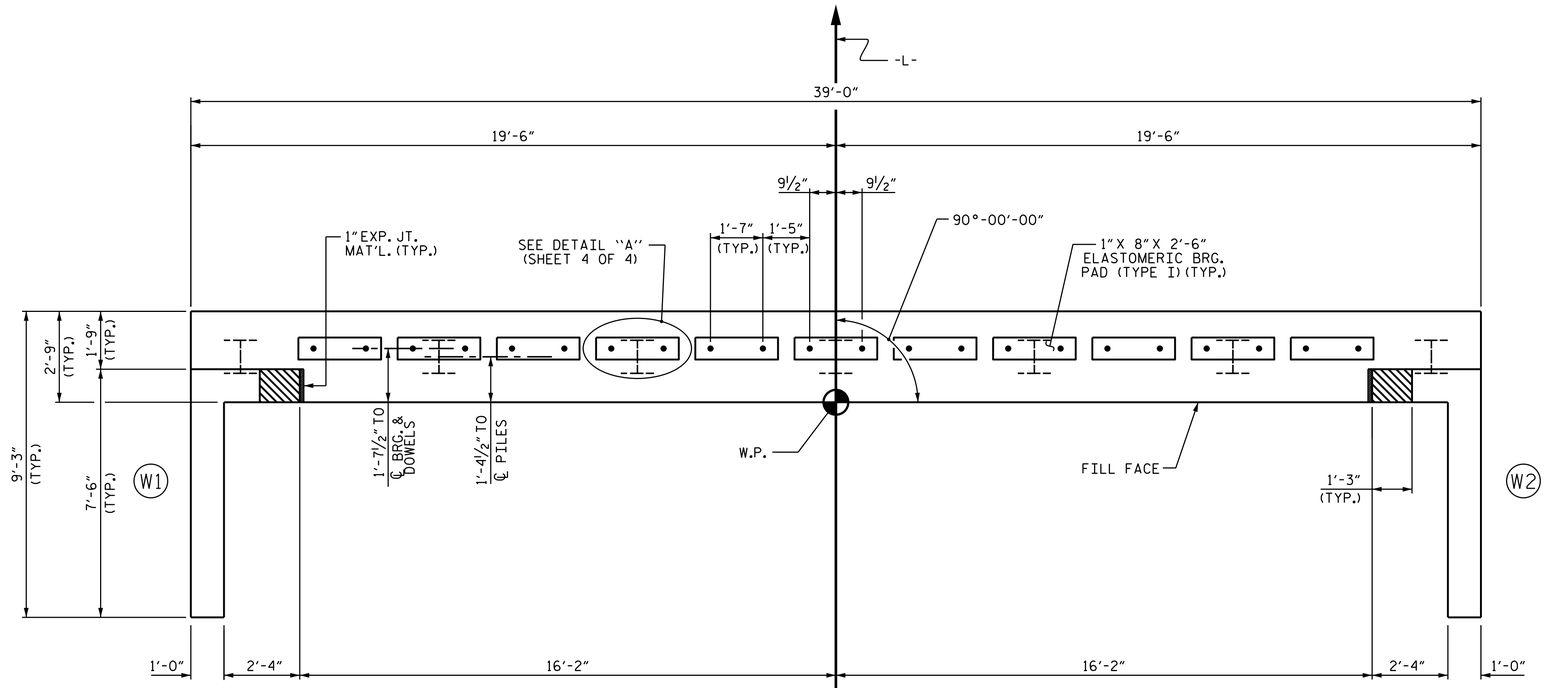

PLAN

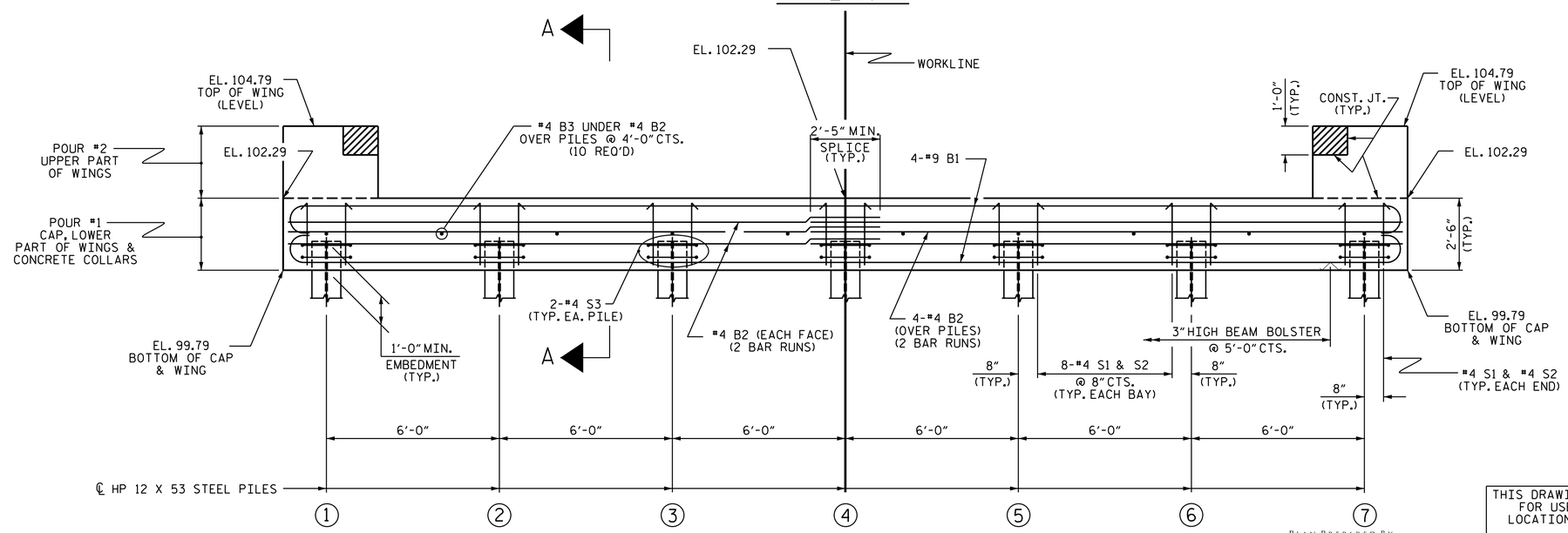

ELEVATION

WINGS NOT SHOWN FOR CLARITY.
FOR SECTION A-A, SEE SHEET 4 OF 4.
CONCRETE COLLARS FOR STEEL PILES NOT SHOWN IN PLAN AND ELEVATION VIEWS FOR CLARITY.
SEE "CORROSION PROTECTION FOR STEEL PILES DETAIL", SHEET 4 OF 4.

PROJECT NO. BP4.R014.1
HALIFAX COUNTY
STATION: 12+17.70 -L-

SHEET 1 OF 4

STATE OF NORTH CAROLINA
DEPARTMENT OF TRANSPORTATION
RALEIGH

SUBSTRUCTURE

END BENT No. 1

PLAN PREPARED BY:

Founded 1998

ALPHA & OMEGA GROUP
CIVIL | STRUCTURAL | WATER RESOURCES

ALPHA AND OMEGA GROUP, PC
4601 LAKE BOONE TRAIL, SUITE 3C, RALEIGH, NC 27607

Firm License No. C-1684 www.aogroup.com

THIS DRAWING REVIEWED & ADOPTED FOR USE AT THE REFERENCED LOCATION BY THE UNDERSIGNED:

NORTH CAROLINA PROFESSIONAL SEAL 14455 ENGINEER TED L. BARTLETT

DOCUMENT NOT CONSIDERED FINAL UNLESS ALL SIGNATURES COMPLETED

REVISIONS						
NO.	BY:	DATE:	NO.	BY:	DATE:	
1			3			
2			4			

SHEET NO. S-17
TOTAL SHEETS 26

ASSEMBLED BY : DM SHAUT DATE : 12-23-21
CHECKED BY : TG ZEBLO DATE : 12-23-21
DRAWN BY : DGE 01/10
CHECKED BY : MKT 01/10
REV. 4/15 MAA/TMG

$$$$$$SYSTIME$$$$$
$$$$$$$$$$$$$$$$$$$$$$$$DGN$$$$$$$$$$$$$$$$$$$$$$$$
$$$$USERNAME$$$$

STD. NO. EB_33_90S

NOTES

STIRRUPS IN CAP MAY BE SHIFTED AS NECESSARY TO CLEAR DOWELS.

THE CONCRETE IN THE SHADED AREA OF THE WING SHALL BE POURED AFTER THE VERTICAL CONCRETE BARRIER RAIL IS CAST IF SLIP FORMING IS USED.

FOR PILE SPLICE DETAILS, SEE SHEET 4 OF 4.

FOR WING DETAILS, SEE SHEET 3 OF 4.

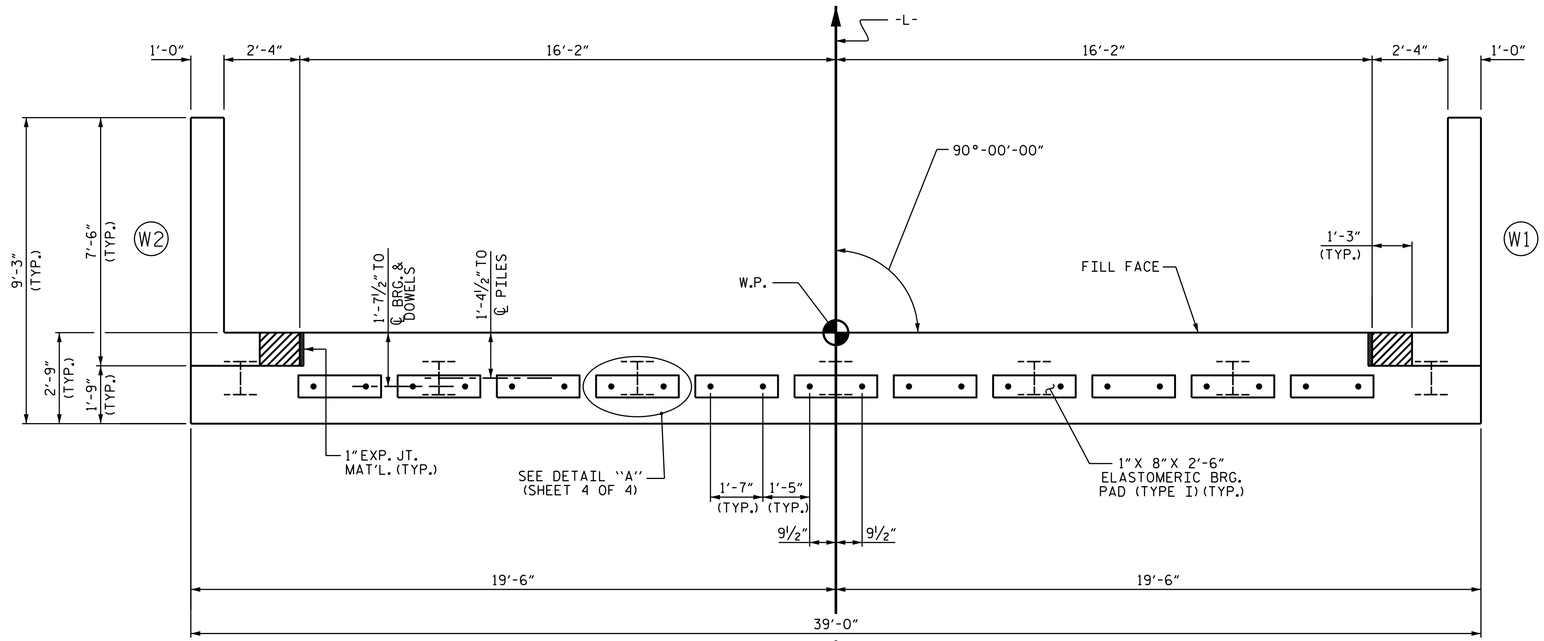

PLAN

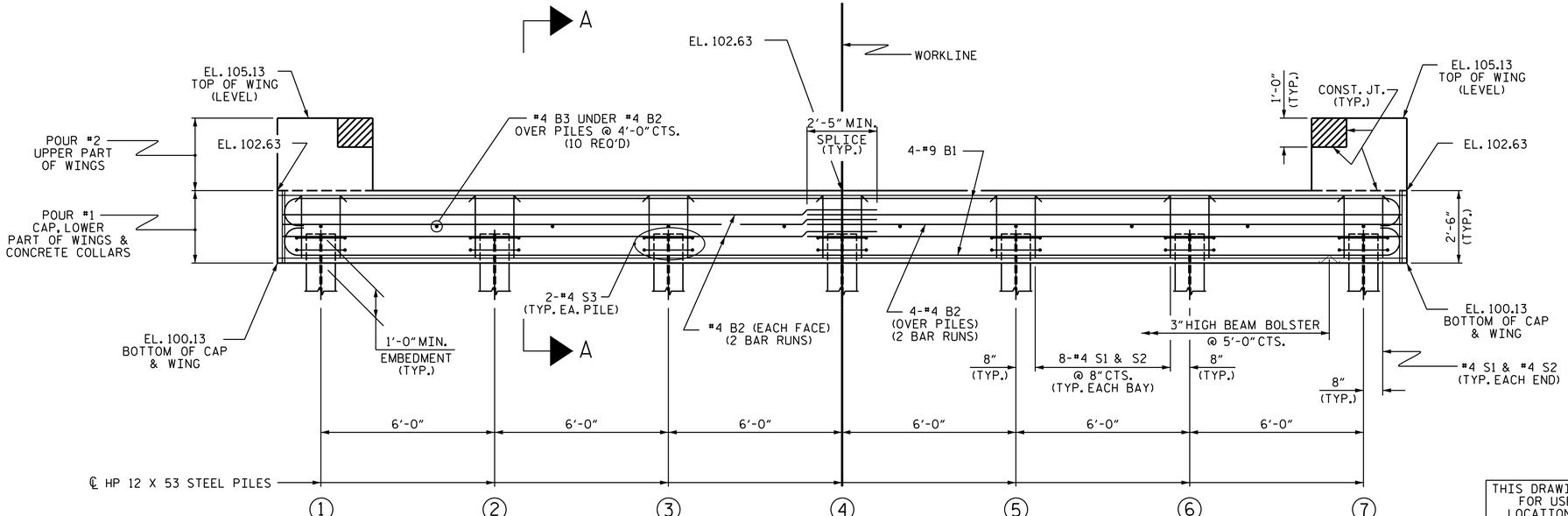

ELEVATION

WINGS NOT SHOWN FOR CLARITY.
FOR SECTION A-A, SEE SHEET 4 OF 4.
CONCRETE COLLARS FOR STEEL PILES NOT SHOWN IN PLAN AND ELEVATION VIEWS FOR CLARITY.
SEE "CORROSION PROTECTION FOR STEEL PILES DETAIL", SHEET 4 OF 4.

PROJECT NO. BP4.R014.1
HALIFAX COUNTY
STATION: 12+17.70 -L-

SHEET 2 OF 4

STATE OF NORTH CAROLINA
DEPARTMENT OF TRANSPORTATION
RALEIGH

SUBSTRUCTURE

END BENT No. 2

THIS DRAWING REVIEWED & ADOPTED FOR USE AT THE REFERENCED LOCATION BY THE UNDERSIGNED:

NORTH CAROLINA PROFESSIONAL SEAL 14455 ENGINEER TED L. BARTELL

DOCUMENT NOT CONSIDERED FINAL UNLESS ALL SIGNATURES COMPLETED

PLAN PREPARED BY:

Founded 1998

ALPHA & OMEGA GROUP
CIVIL | STRUCTURAL | WATER RESOURCES

ALPHA AND OMEGA GROUP, PC
4601 LAKE BOONE TRAIL, SUITE 3C, RALEIGH, NC 27607

Firm License No. C-1684 www.aogroup.com

ASSEMBLED BY : DM SHAUT	DATE : 12-23-21		
CHECKED BY : TG ZEBLO	DATE : 12-23-21		
DRAWN BY : DGE 01/10	REV. 4/15	MAA/TMG	
CHECKED BY : MKT 01/10			

REVISIONS								SHEET NO.
NO.	BY:	DATE:	NO.	BY:	DATE:			S-18
1			3					TOTAL SHEETS
2			4					26

STD. NO. EB_33_90S

$$$$$$SYSTIME$$$$$
$$$$$$$$$$$$$$$$$$$$$$$$DGN$$$$$$$$$$$$$$$$$$$$$$$$
$$$$USERNAME$$$$

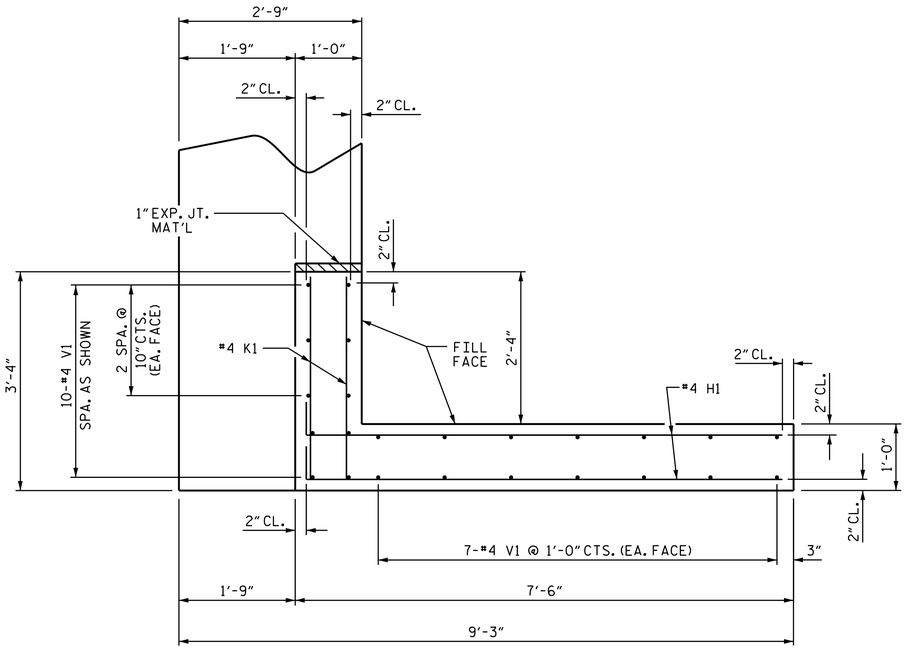

PLAN OF WING (W1)

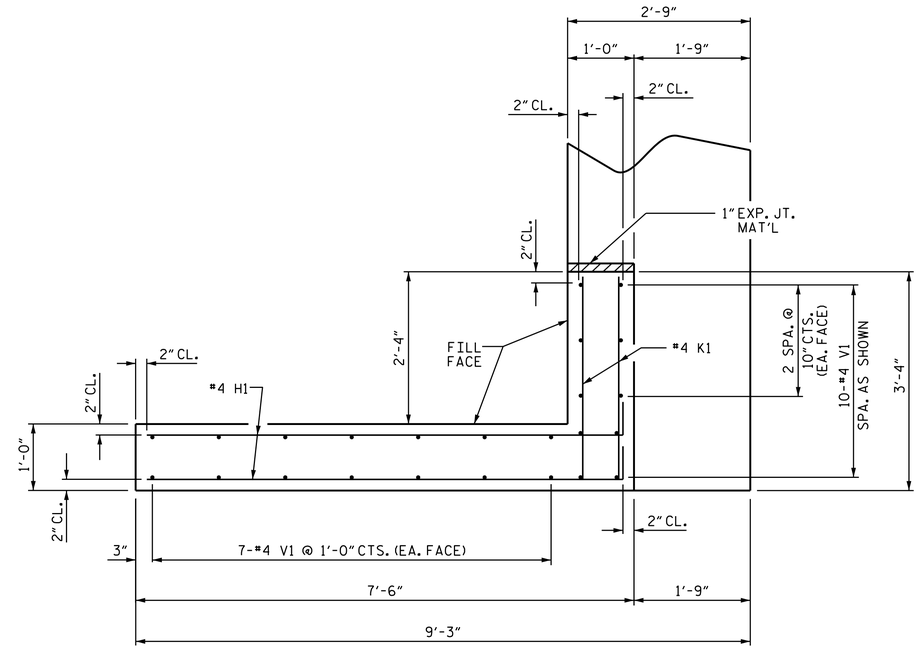

PLAN OF WING (W2)

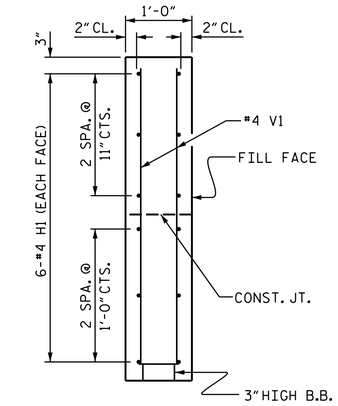

SECTION X-X

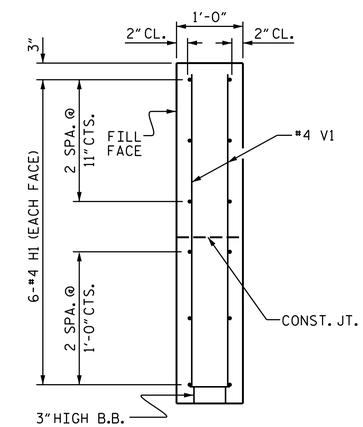

SECTION Y-Y

X

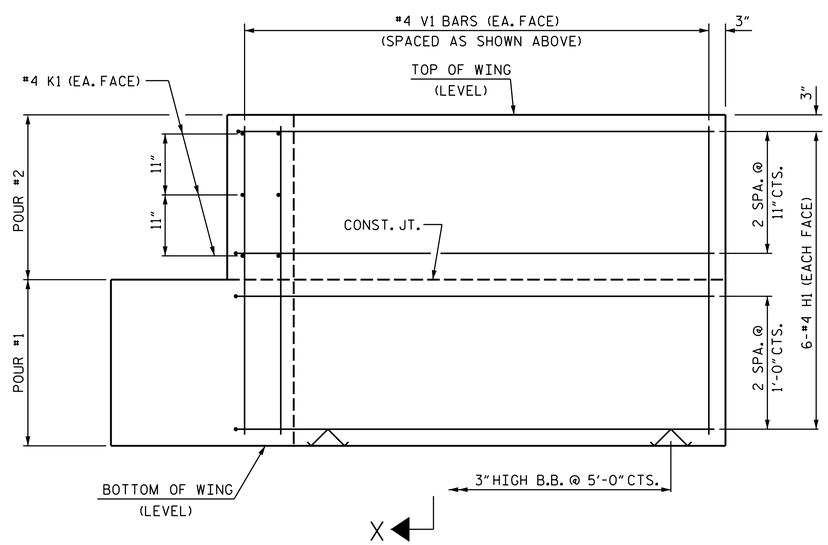

ELEVATION OF WING (W1)

Y

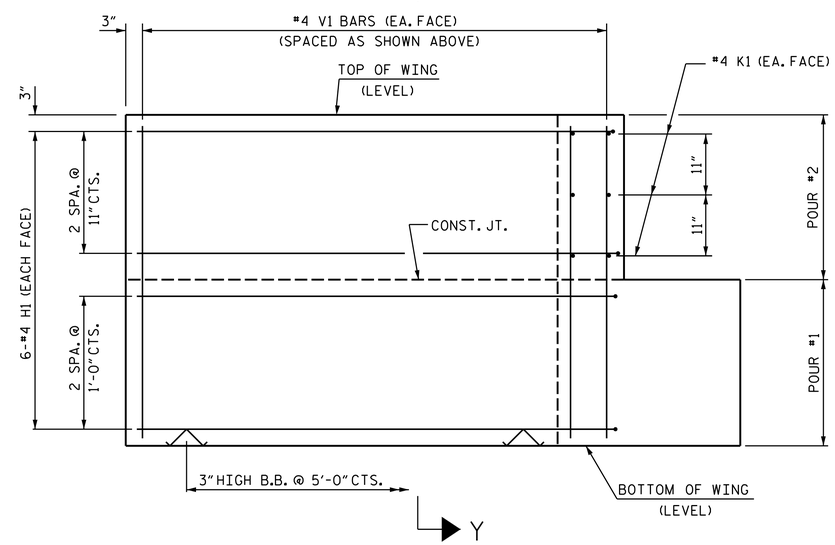

ELEVATION OF WING (W2)

WING DETAILS

PROJECT NO. BP4.R014.1

HALIFAX COUNTY

STATION: 12+17.70 -L-

SHEET 3 OF 4

STATE OF NORTH CAROLINA
DEPARTMENT OF TRANSPORTATION
RALEIGH

SUBSTRUCTURE

END BENT
WING DETAILS

ASSEMBLED BY : DM SHAUT	DATE : 12-23-21		
CHECKED BY : TG ZEBLO	DATE : 12-23-21		
DRAWN BY : DGE 02/10	REV. 4/15	MAA/TMG	
CHECKED BY : MKT 02/10			

PLAN PREPARED BY:

Founded 1998

ALPHA & OMEGA GROUP
CIVIL | STRUCTURAL | WATER RESOURCES

ALPHA AND OMEGA GROUP, PC
4601 LAKE BOONE TRAIL, SUITE 3C, RALEIGH, NC 27607

Firm License No. C-1684 www.aogroup.com

THIS DRAWING REVIEWED & ADOPTED FOR USE AT THE REFERENCED LOCATION BY THE UNDERSIGNED:

NORTH CAROLINA PROFESSIONAL SEAL 14455 ENGINEER T.D.L. BARTELL

DOCUMENT NOT CONSIDERED FINAL UNLESS ALL SIGNATURES COMPLETED

REVISIONS								SHEET NO.
NO.	BY:	DATE:	NO.	BY:	DATE:			S-19
1			3					TOTAL SHEETS
2			4					26

STD. NO. EB_33_90S

$$$$$$SYSTIME$$$$$
$$$$$$$$$$$$$$$$$$$$$$$$DGN$$$$$$$$$$$$$$$$$$$$$$$$
$$$$USERNAME$$$$

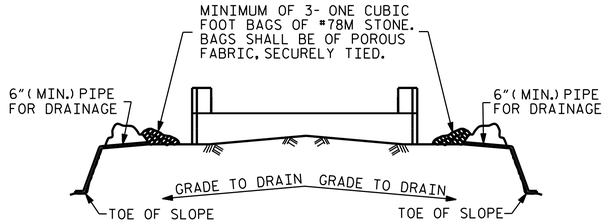

BAGGED STONE AND PIPE SHALL BE PLACED IMMEDIATELY AFTER COMPLETION OF END BENT EXCAVATION. PIPE MAY BE EITHER CONCRETE, CORRUGATED STEEL, CORRUGATED ALUMINUM ALLOY, OR CORRUGATED PLASTIC. PERFORATED PIPE WILL NOT BE ALLOWED.

BAGGED STONE SHALL REMAIN IN PLACE UNTIL THE ENGINEER DIRECTS THAT IT BE REMOVED. THE CONTRACTOR SHALL REMOVE AND DISPOSE OF SILT ACCUMULATIONS AT BAGGED STONE WHEN SO DIRECTED BY THE ENGINEER. BAGS SHALL BE REMOVED AND REPLACED WHENEVER THE ENGINEER DETERMINES THAT THEY HAVE DETERIORATED AND LOST THEIR EFFECTIVENESS.

NO SEPARATE PAYMENT WILL BE MADE FOR THIS WORK AND THE ENTIRE COST OF THIS WORK SHALL BE INCLUDED IN THE UNIT CONTRACT PRICE BID FOR THE SEVERAL PAY ITEMS.

TEMPORARY DRAINAGE AT END BENT

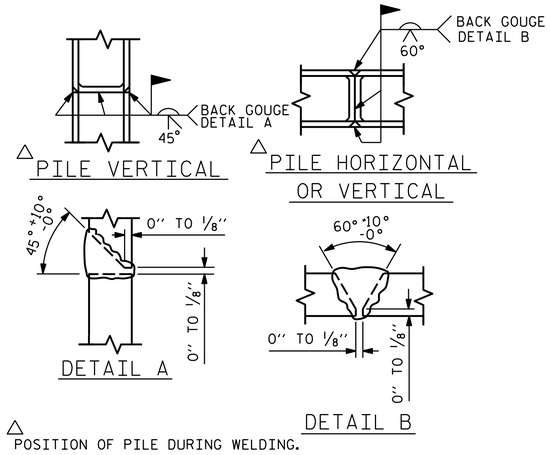

△ POSITION OF PILE DURING WELDING.

PILE SPLICE DETAILS

SCALE- 7/16" = 1'-0"

BAR TYPES

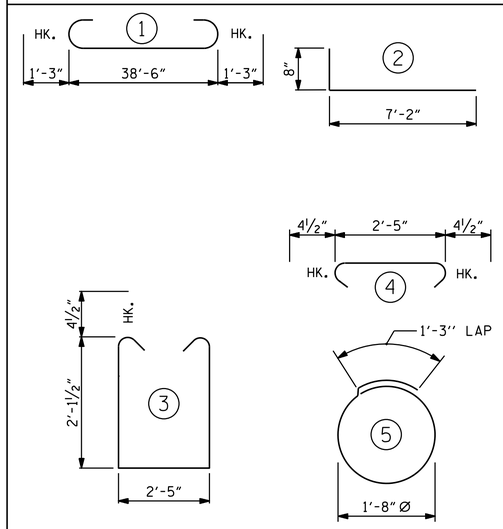

ALL BAR DIMENSIONS ARE OUT TO OUT.

END BENT No. 1	END BENT No. 2
HP 12 X 53 STEEL PILES NO: 7 LIN. FT.= 455	HP 12 X 53 STEEL PILES NO: 7 LIN. FT.= 455
PILE DRIVING EQUIPMENT SETUP FOR HP 12 X 53 STEEL PILES NO: 7	PILE DRIVING EQUIPMENT SETUP FOR HP 12 X 53 STEEL PILES NO: 7
PILE REDRIVES NO: 4	PILE REDRIVES NO: 4

BILL OF MATERIAL FOR ONE END BENT

BAR	NO.	SIZE	TYPE	LENGTH	WEIGHT
B1	8	#9	1	41'-0"	1115
B2	16	#4	STR	20'-7"	220
B3	10	#4	STR	2'-5"	16
D1	22	#6	STR	1'-6"	50
H1	24	#4	2	7'-10"	126
K1	12	#4	STR	2'-11"	23
S1	50	#4	3	7'-5"	248
S2	50	#4	4	3'-2"	106
S3	14	#4	5	6'-6"	61
V1	48	#4	STR	4'-8"	150

REINFORCING STEEL (FOR ONE END BENT) 2115 LBS.

CLASS A CONCRETE BREAKDOWN (FOR ONE END BENT)

POUR #1 CAP, LOWER PART OF WINGS & COLLARS 12.4 C.Y.

POUR #2 UPPER PART OF WINGS 1.8 C.Y.

TOTAL CLASS A CONCRETE 14.2 C.Y.

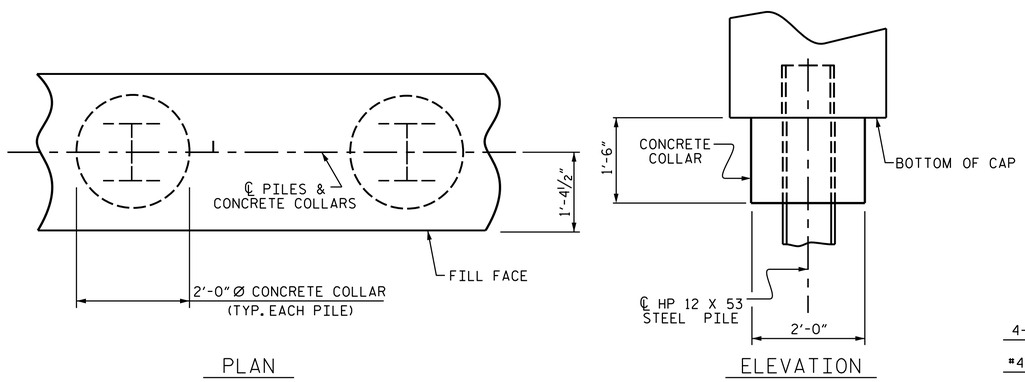

PLAN

ELEVATION

CORROSION PROTECTION FOR STEEL PILES DETAIL

(END BENT No. 1 SHOWN, END BENT No. 2 SIMILAR BY ROTATION)

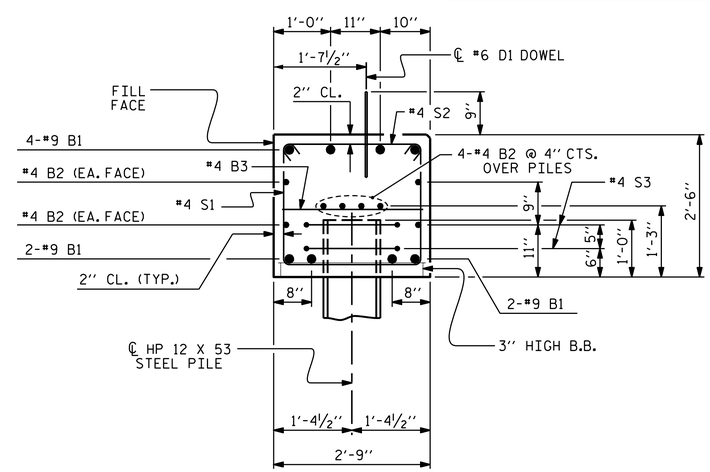

SECTION A-A

(CONCRETE COLLAR NOT SHOWN FOR CLARITY. SEE "CORROSION PROTECTION FOR STEEL PILES DETAIL.")

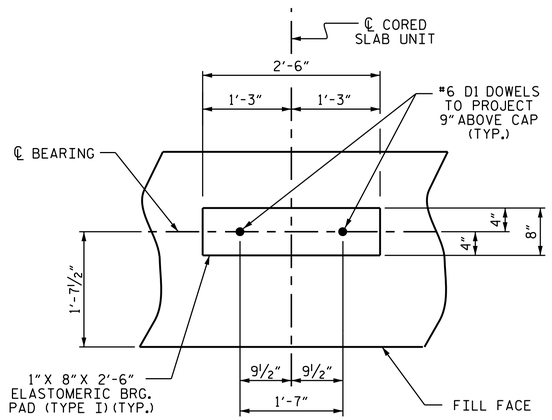

DETAIL "A"

(END BENT No. 1 SHOWN, END BENT No. 2 SIMILAR BY ROTATION)

PROJECT NO. BP4.R014.1

HALIFAX COUNTY

STATION: 12+17.70 -L-

SHEET 4 OF 4

PLAN PREPARED BY:

Founded 1998

ALPHA & OMEGA GROUP
CIVIL | STRUCTURAL | WATER RESOURCES

ALPHA AND OMEGA GROUP, PC
4601 LAKE BOONE TRAIL, SUITE 3C, RALEIGH, NC 27607

Firm License No. C-1684 www.aogroup.com

THIS DRAWING REVIEWED & ADOPTED FOR USE AT THE REFERENCED LOCATION BY THE UNDERSIGNED:

NORTH CAROLINA PROFESSIONAL SEAL 14455 ENGINEER T.E.D.L. BARTELL

DOCUMENT NOT CONSIDERED FINAL UNLESS ALL SIGNATURES COMPLETED

STATE OF NORTH CAROLINA
DEPARTMENT OF TRANSPORTATION
RALEIGH

SUBSTRUCTURE

END BENT No. 1 & 2 DETAILS

REVISIONS							SHEET NO.
NO.	BY:	DATE:	NO.	BY:	DATE:		S-20
1			3				TOTAL SHEETS
2			4				26

ASSEMBLED BY : DM SHAUT		DATE : 12-23-21	
CHECKED BY : TG ZEBLO		DATE : 12-23-21	
DRAWN BY : DGE 12/09	REV. 4/17	MAA/THC	
CHECKED BY : MKT 01/10			

$$$$$$SYSTIME$$$$$
$$$$$$$$$$$$$$$$$$$$DGN$$$$$$$$$$$$$$$$$$$$$$$$
$$$$USERNAME$$$$

STD. NO. EB_33_90S

NOTES

STIRRUPS IN CAP MAY BE SHIFTED AS NECESSARY TO CLEAR DOWELS.

★ INVERT ALTERNATE STIRRUPS.

GALVANIZE THE TOP OF EACH INTERIOR BENT PILE A MINIMUM OF 22.0 FEET. GALVANIZE IN ACCORDANCE WITH SECTION 1076 OF THE STANDARD SPECIFICATIONS.

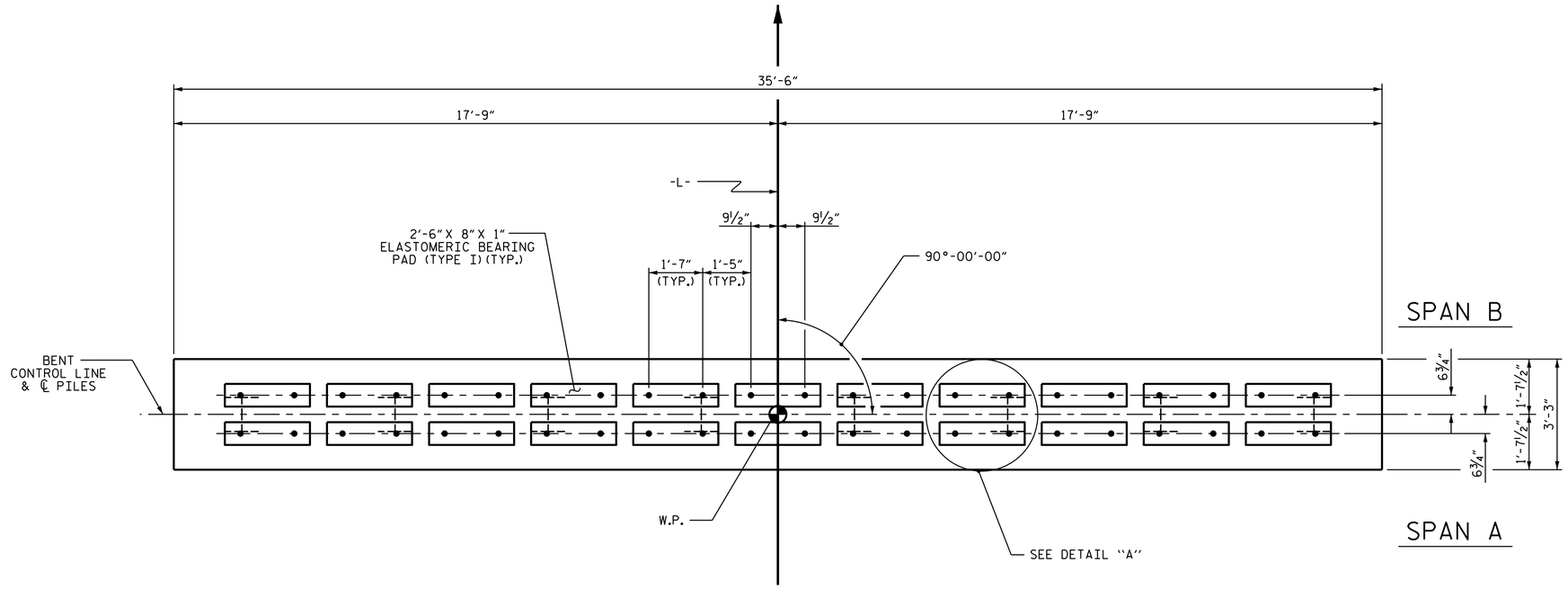

PLAN

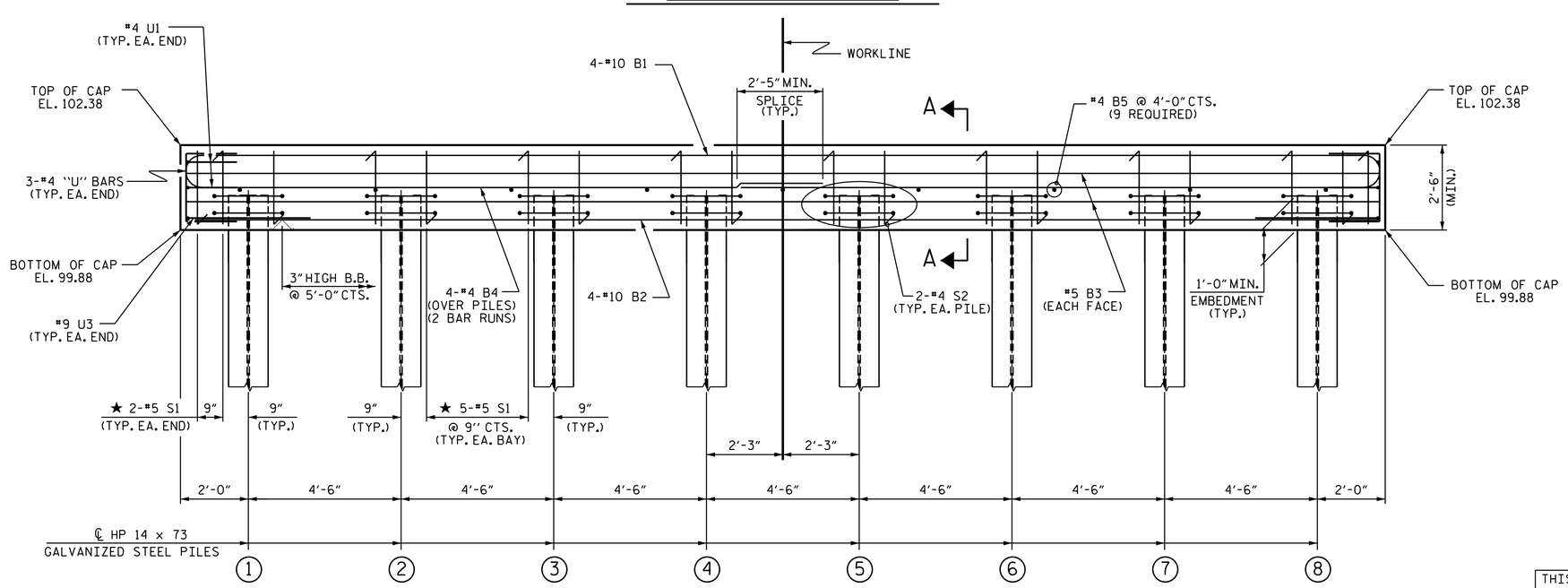

ELEVATION

FOR SECTION A-A, SEE SHEET 2 OF 2

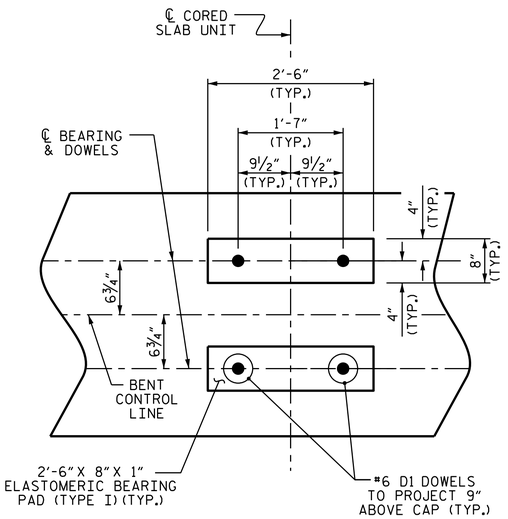

DETAIL "A"

(DIMENSIONS ARE TYPICAL EACH BEARING)

PROJECT NO. BP4.R014.1

HALIFAX COUNTY

STATION: 12+17.70 -L-

SHEET 1 OF 3

STATE OF NORTH CAROLINA
DEPARTMENT OF TRANSPORTATION
RALEIGH

SUBSTRUCTURE

BENT No. 1

ASSEMBLED BY : DM SHAUT	DATE : 12-23-21
CHECKED BY : TG ZEBLO	DATE : 12-23-21
DRAWN BY : DGE 05/10	REV. 6/17 MAA/THC
CHECKED BY : MKT 05/10	

PLAN PREPARED BY:

Founded 1998

ALPHA & OMEGA GROUP
CIVIL | STRUCTURAL | WATER RESOURCES

ALPHA AND OMEGA GROUP, PC
4601 LAKE BOONE TRAIL, SUITE 3C, RALEIGH, NC 27607

Firm License No. C-1684 www.aogroup.com

THIS DRAWING REVIEWED & ADOPTED FOR USE AT THE REFERENCED LOCATION BY THE UNDERSIGNED:

NORTH CAROLINA PROFESSIONAL SEAL 14455 ENGINEER TED L. BARTELT

DOCUMENT NOT CONSIDERED FINAL UNLESS ALL SIGNATURES COMPLETED

REVISIONS						SHEET NO.
NO.	BY:	DATE:	NO.	BY:	DATE:	S-21
1			3			TOTAL SHEETS
2			4			26

$$$$$$SYSTIME$$$$$
$$$$$$$$$$$$$$$$$$$$$$$$DGN$$$$$$$$$$$$$$$$$$$$$$$$
$$$$USERNAME$$$$

STD. NO. 14" HP_BT_33_90S_<60'

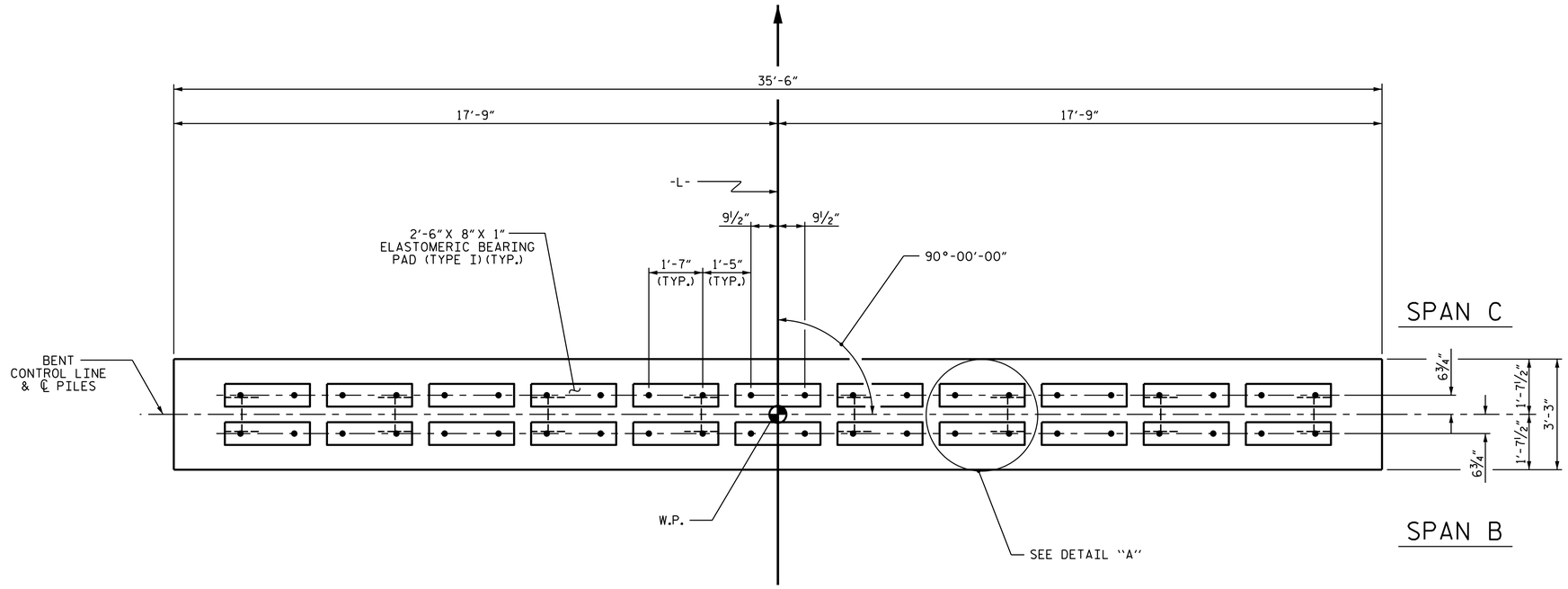

PLAN

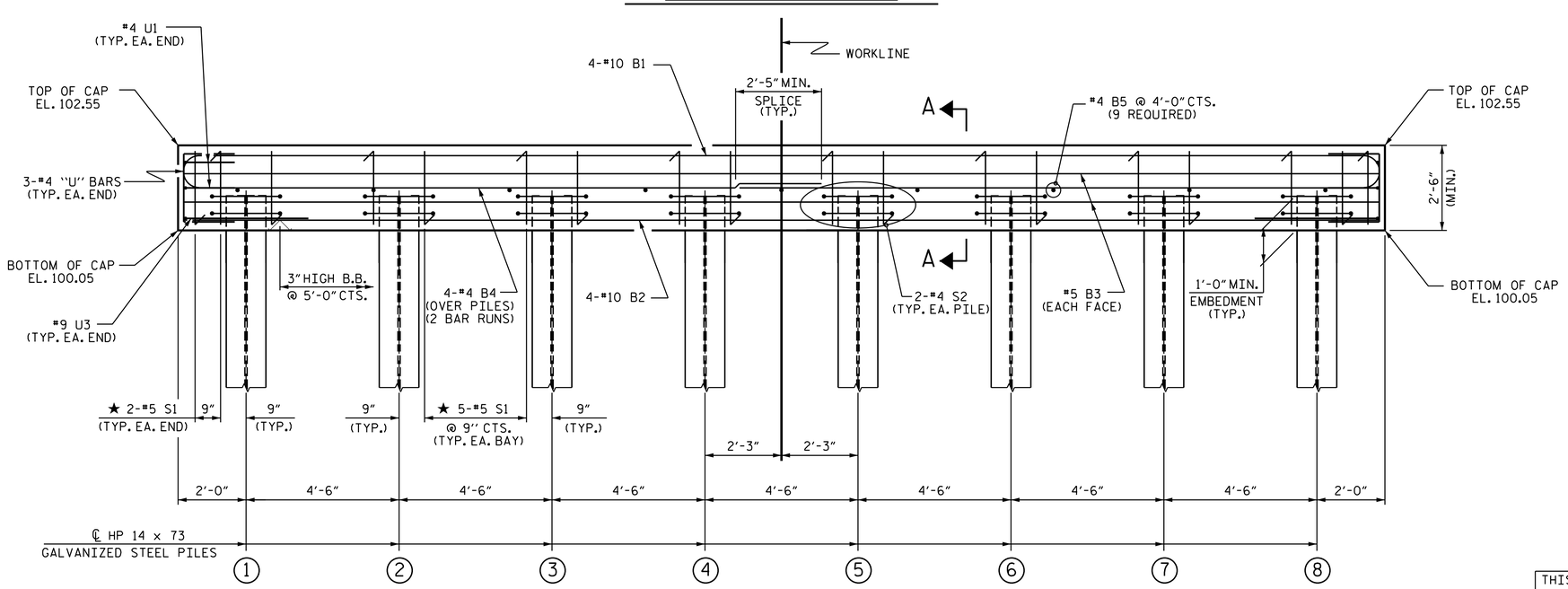

ELEVATION

FOR SECTION A-A, SEE SHEET 2 OF 2

NOTES

STIRRUPS IN CAP MAY BE SHIFTED AS NECESSARY TO CLEAR DOWELS.

★ INVERT ALTERNATE STIRRUPS.

GALVANIZE THE TOP OF EACH INTERIOR BENT PILE A MINIMUM OF 22.0 FEET. GALVANIZE IN ACCORDANCE WITH SECTION 1076 OF THE STANDARD SPECIFICATIONS.

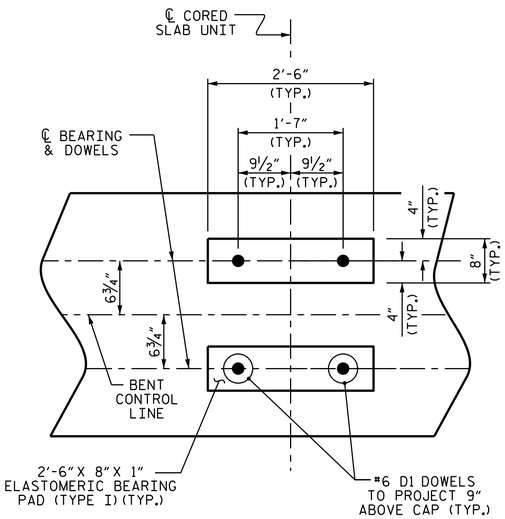

DETAIL "A"

(DIMENSIONS ARE TYPICAL EACH BEARING)

PROJECT NO. BP4.R014.1

HALIFAX COUNTY

STATION: 12+17.70 -L-

SHEET 2 OF 3

STATE OF NORTH CAROLINA
DEPARTMENT OF TRANSPORTATION
RALEIGH

SUBSTRUCTURE

BENT No. 2

ASSEMBLED BY : DM SHAUT	DATE : 12-23-21
CHECKED BY : TG ZEBLO	DATE : 12-23-21
DRAWN BY : DGE 05/10	REV. 6/17 MAA/THC
CHECKED BY : MKT 05/10	

PLAN PREPARED BY:

Founded 1998

ALPHA & OMEGA GROUP
CIVIL | STRUCTURAL | WATER RESOURCES

ALPHA AND OMEGA GROUP, PC
4601 LAKE BOONE TRAIL, SUITE 3C, RALEIGH, NC 27607

Firm License No. C-1684 www.aogroup.com

THIS DRAWING REVIEWED & ADOPTED FOR USE AT THE REFERENCED LOCATION BY THE UNDERSIGNED:

NORTH CAROLINA PROFESSIONAL SEAL 14455 ENGINEER JED L. BARTELL

DOCUMENT NOT CONSIDERED FINAL UNLESS ALL SIGNATURES COMPLETED

REVISIONS						SHEET NO.
NO.	BY:	DATE:	NO.	BY:	DATE:	S-22
1			3			TOTAL SHEETS
2			4			26

$$$$$$SYSTIME$$$$$
$$$$$$$$$$$$$$$$$$$$$$$$DGN$$$$$$$$$$$$$$$$$$$$$$$$
$$$$USERNAME$$$$

STD. NO. 14" HP_BT_33_90S_<60'

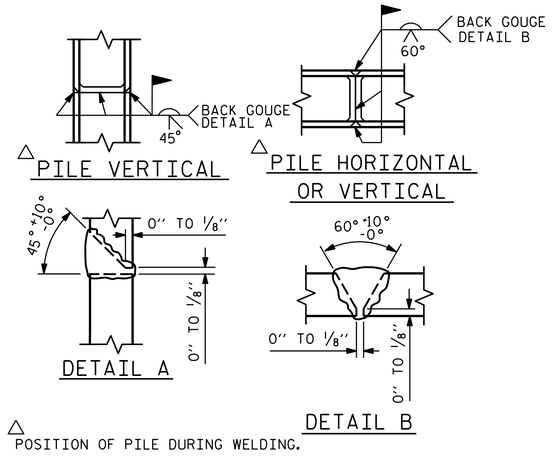

PILE SPLICE DETAILS

SCALE- 3/4" = 1'-0"

BAR TYPES

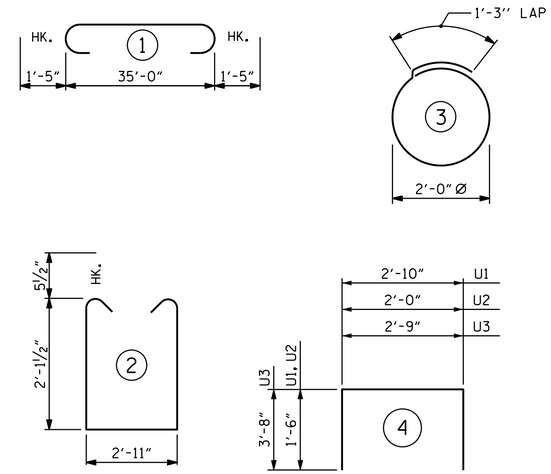

ALL BAR DIMENSIONS ARE OUT TO OUT.

BILL OF MATERIAL

FOR ONE BENT

BAR	NO.	SIZE	TYPE	LENGTH	WEIGHT
B1	4	#10	1	37'-10"	651
B2	4	#10	STR	35'-2"	605
B3	4	#5	STR	35'-2"	147
B4	8	#4	STR	18'-10"	101
B5	9	#4	STR	2'-11"	18
D1	44	#6	STR	1'-6"	99
S1	39	#5	2	8'-1"	329
S2	16	#4	3	7'-7"	81
U1	4	#4	4	5'-10"	16
U2	6	#4	4	5'-0"	20
U3	2	#9	4	10'-1"	69

REINFORCING STEEL (FOR ONE BENT) 2136 LBS

CLASS A CONCRETE BREAKDOWN (FOR ONE BENT)

TOTAL CLASS A CONCRETE 10.7 C.Y.

HP 14 X 73 GALVANIZED STEEL PILES (FOR ONE BENT)

No. 8 LIN. FT. 640

PILE DRIVING EQUIPMENT SETUP FOR HP 14 X 73 GALVANIZED STEEL PILES (FOR ONE BENT) NO: 8

PILE REDRIVES NO: 4

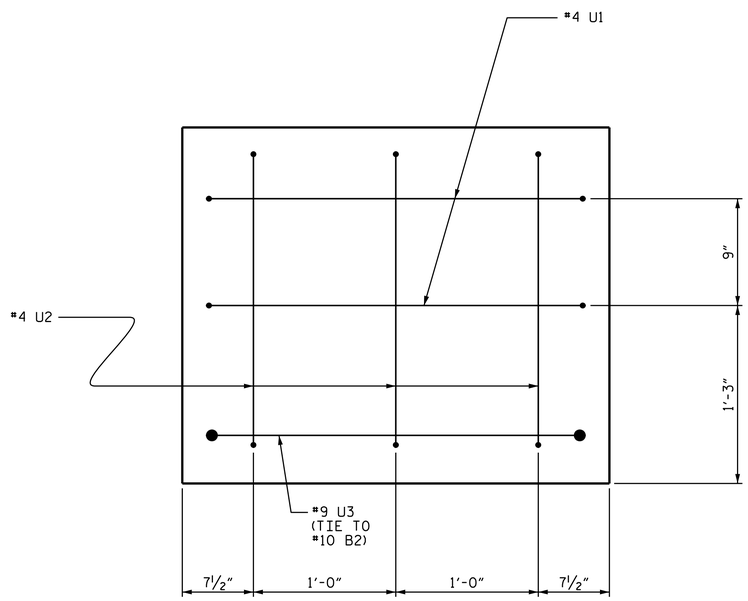

END OF CAP VIEW

(TYPICAL BOTH ENDS)

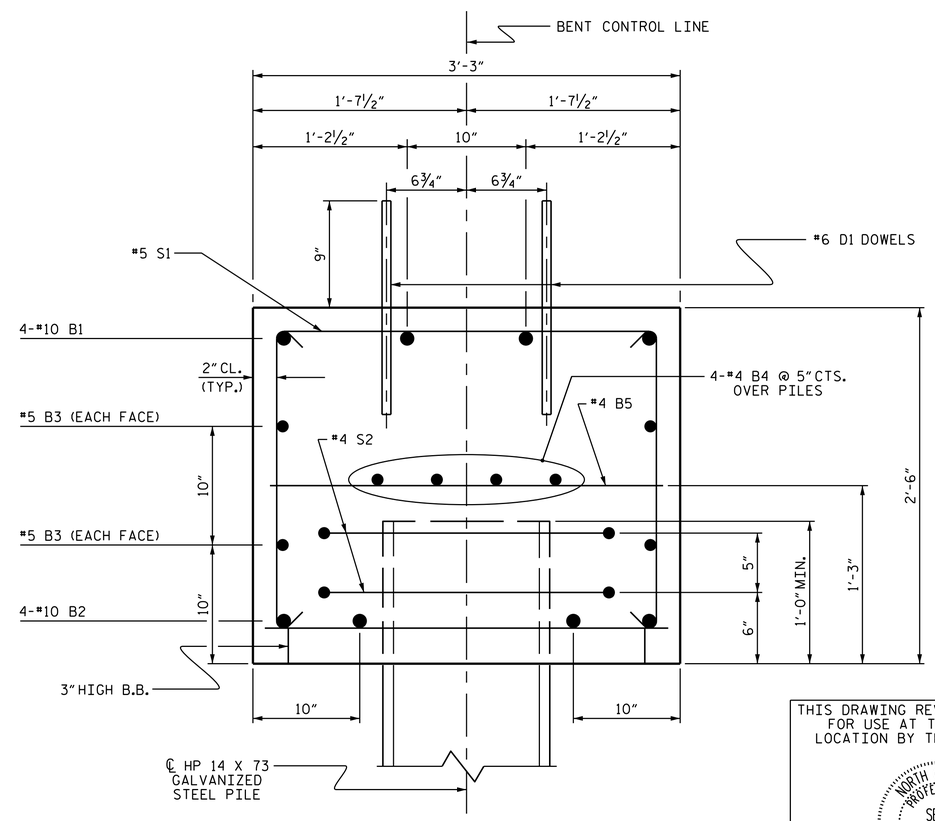

SECTION A-A

THIS DRAWING REVIEWED & ADOPTED FOR USE AT THE REFERENCED LOCATION BY THE UNDERSIGNED:

NORTH CAROLINA PROFESSIONAL SEAL 14455 ENGINEER TED L. BARTELT

DOCUMENT NOT CONSIDERED FINAL UNLESS ALL SIGNATURES COMPLETED

PLAN PREPARED BY:

ALPHA & OMEGA GROUP
CIVIL | STRUCTURAL | WATER RESOURCES
Founded 1998

ALPHA AND OMEGA GROUP, PC
4601 LAKE BOONE TRAIL, SUITE 3C, RALEIGH, NC 27607
Firm License No. C-1684 www.aogroup.com

PROJECT NO. BP4.R014.1

HALIFAX COUNTY

STATION: 12+17.70 -L-

SHEET 3 OF 3

STATE OF NORTH CAROLINA
DEPARTMENT OF TRANSPORTATION
RALEIGH

SUBSTRUCTURE

BENT No. 1 & 2

REVISIONS						SHEET NO.
NO.	BY:	DATE:	NO.	BY:	DATE:	S-23
1			3			TOTAL SHEETS
2			4			26

ASSEMBLED BY : DM SHAUT		DATE : 12-23-21	
CHECKED BY : TG ZEBLO		DATE : 12-23-21	
DRAWN BY : DGE 05/10	REV. 6/17	MAA/THC	
CHECKED BY : MKT 05/10			

$$$$$$SYSTIME$$$$$
$$$$$$$$$$$$$$$$$$$$$$$$DGN$$$$$$$$$$$$$$$$$$$$$$$$
$$$$USERNAME$$$$

STD. NO. 14" HP_BT_33_90S_<60'

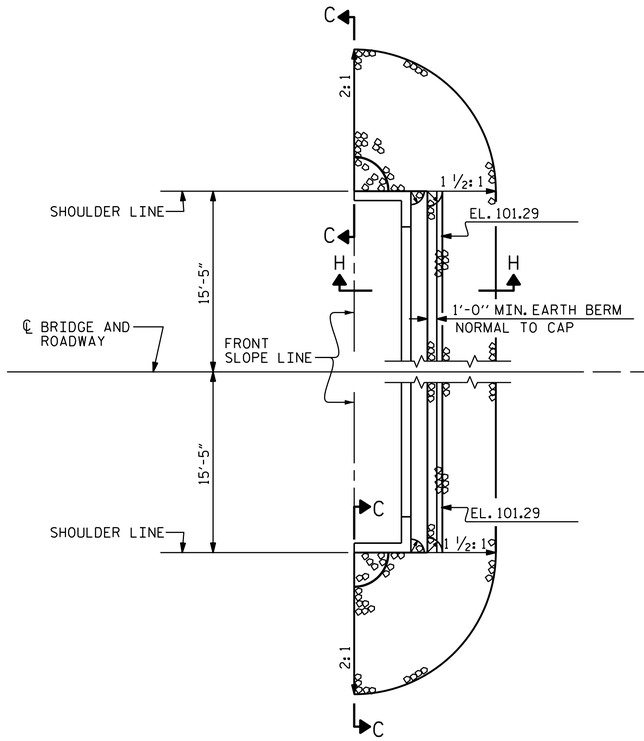

SHOULDER RIP RAP IS HIGHER THAN BERM RIP RAP

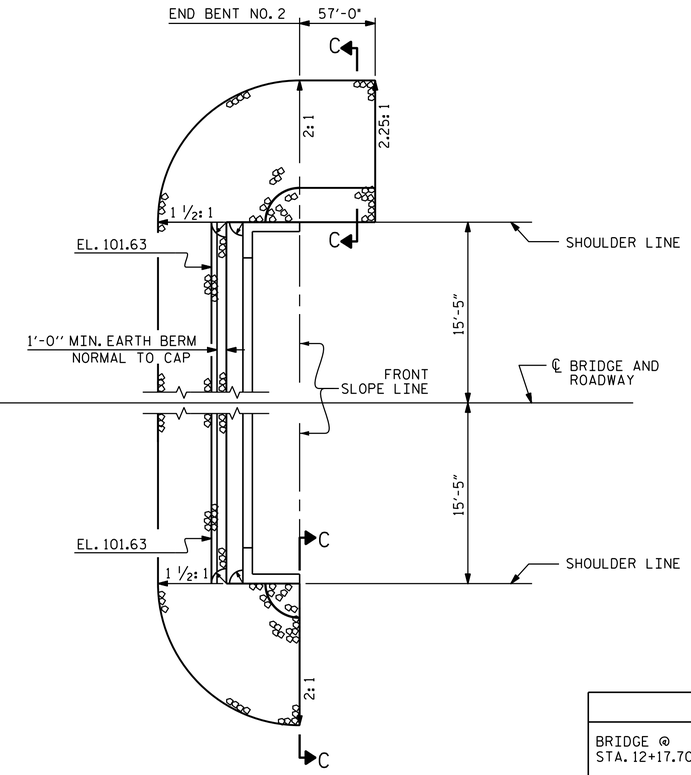

BERM RIP RAPPED

NOTES :

FOR BERM WIDTH DIMENSIONS, SEE GENERAL DRAWING, SHEET 1 OF 3.

ESTIMATED QUANTITIES		
BRIDGE @ STA. 12+17.70 -L-	RIP RAP CLASS II (2'-0" THICK)	GEOTEXTILE FOR DRAINAGE
	TONS	SQUARE YARDS
END BENT 1	55	61
END BENT 2	163	181

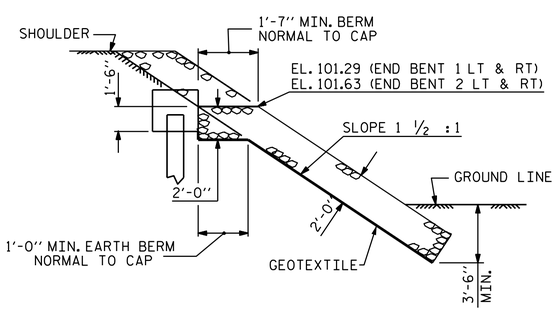

SECTION H-H

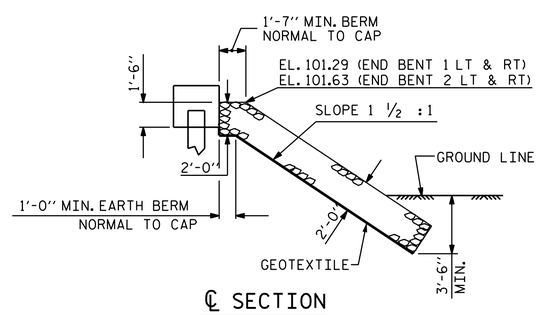

℄ SECTION
BERM RIP RAPPED

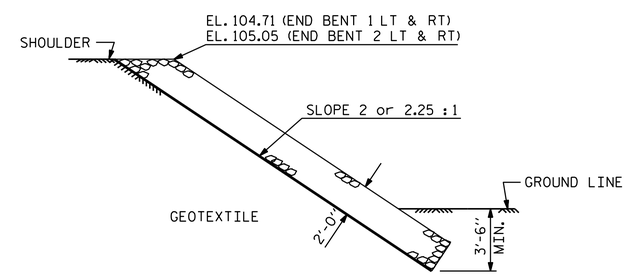

SECTION C-C

PROJECT NO. BP4.R014.1
HALIFAX COUNTY
STATION: 12+17.70 -L-

STATE OF NORTH CAROLINA
DEPARTMENT OF TRANSPORTATION
RALEIGH

RIP RAP DETAILS

PLAN PREPARED BY:
Founded 1998
ALPHA & OMEGA GROUP
CIVIL | STRUCTURAL | WATER RESOURCES
ALPHA AND OMEGA GROUP, PC
4601 LAKE BOONE TRAIL, SUITE 3C, RALEIGH, NC 27607
Firm License No. C-1684 www.aogroup.com
PROJECT NO. : 2021.010

NORTH CAROLINA PROFESSIONAL SEAL 14455 ENGINEER TED L. BARTELT

DOCUMENT NOT CONSIDERED FINAL UNLESS ALL SIGNATURES COMPLETED

REVISIONS							SHEET NO.
NO.	BY:	DATE:	NO.	BY:	DATE:		S-24
1			3				TOTAL SHEETS
2			4				26

DRAWN BY : D. M. SHAUT 12-23-21
CHECKED BY : T. G. ZEBLO 12-23-21
ENGINEER OF RECORD : TED L. BARTELT

$$$$$$SYSTIME$$$$$
$$$$$$$$$$$$$$$$$$$$$$$$DGN$$$$$$$$$$$$$$$$$$$$$$$$
$$$$USERNAME$$$$

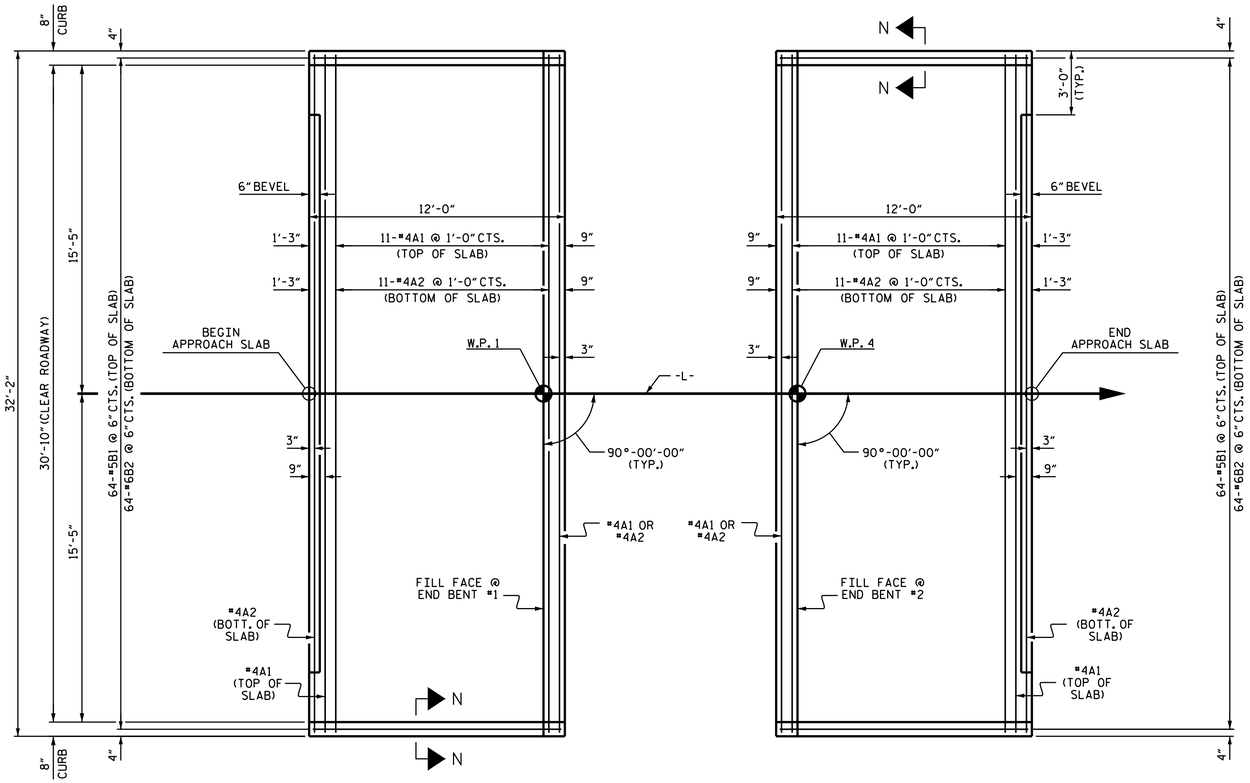

PLAN @ END BENT #1

PLAN @ END BENT #2

DIMENSIONS SHOWN ARE TYPICAL FOR BOTH APPROACH SLABS.

NOTES

FOR BRIDGE APPROACH FILL INCLUDING GEOTEXTILE, 4"Ø DRAINAGE PIPE, AND SELECT MATERIAL BACKFILL, SEE ROADWAY PLANS.

GEOTEXTILE SHALL BE TYPE 1 IN ACCORDANCE WITH THE STANDARD SPECIFICATIONS SECTION 1056.

SELECT MATERIAL BACKFILL (CLASS V OR CLASS VI) SHALL BE IN ACCORDANCE WITH STANDARD SPECIFICATIONS SECTION 1016.

SELECT MATERIAL BACKFILL IS TO BE CONTINUOUS ALONG FILL FACE OF BACKWALL FROM OUTSIDE EDGE TO OUTSIDE EDGE OF APPROACH SLAB.

FOR THE 4"Ø DRAINAGE PIPE OUTLET(S), SEE ROADWAY STANDARD DRAWINGS.

AREA BETWEEN THE WINGWALL AND APPROACH SLAB SHALL BE GRADED TO DRAIN THE WATER AWAY FROM THE FILL FACE OF THE BRIDGE AND SHALL BE PAVED. SEE ROADWAY PLANS.

APPROACH SLAB GROOVING IS NOT REQUIRED.

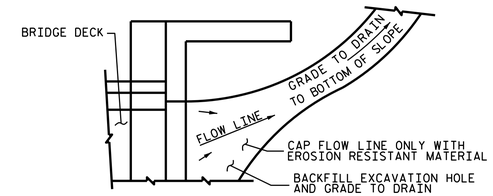

NOTE: IF THE APPROACH SLAB IS NOT CONSTRUCTED IMMEDIATELY AFTER THE BACKFILLING OF THE END BENT EXCAVATION, GRADE TO DRAIN TO THE BOTTOM OF THE SLOPE AND PROVIDE EROSION RESISTANT MATERIAL, SUCH AS FIBERGLASS ROVING OR AS DIRECTED BY THE ENGINEER TO PREVENT SOIL EROSION AND TO PROTECT THE AREA ADJACENT TO THE STRUCTURE. THE CONTRACTOR WILL BE REQUIRED TO REMOVE THESE MATERIALS PRIOR TO CONSTRUCTION OF THE APPROACH SLAB.

BILL OF MATERIAL

APPROACH SLAB AT EB #1

BAR	NO.	SIZE	TYPE	LENGTH	WEIGHT
* A1	13	#4	STR	31'-10"	276
A2	13	#4	STR	31'-10"	276
* B1	64	#5	STR	11'-2"	745
B2	64	#6	STR	11'-8"	1121
REINFORCING STEEL				LBS.	1397
* EPOXY COATED REINFORCING STEEL				LBS.	1021
CLASS AA CONCRETE				C. Y.	18.4

APPROACH SLAB AT EB #2

BAR	NO.	SIZE	TYPE	LENGTH	WEIGHT
* A1	13	#4	STR	31'-10"	276
A2	13	#4	STR	31'-10"	276
* B1	64	#5	STR	11'-2"	745
B2	64	#6	STR	11'-8"	1121
REINFORCING STEEL				LBS.	1397
* EPOXY COATED REINFORCING STEEL				LBS.	1021
CLASS AA CONCRETE				C. Y.	18.4

TEMPORARY DRAINAGE DETAIL

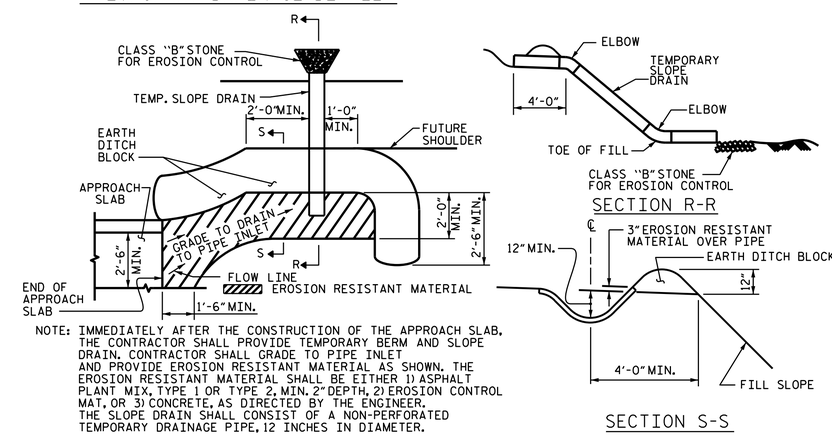

NOTE: IMMEDIATELY AFTER THE CONSTRUCTION OF THE APPROACH SLAB, THE CONTRACTOR SHALL PROVIDE TEMPORARY BERM AND SLOPE DRAIN. CONTRACTOR SHALL GRADE TO PIPE INLET AND PROVIDE EROSION RESISTANT MATERIAL AS SHOWN. THE EROSION RESISTANT MATERIAL SHALL BE EITHER 1) ASPHALT PLANT MIX, TYPE 1 OR TYPE 2, MIN. 2" DEPTH, 2) EROSION CONTROL MAT, OR 3) CONCRETE, AS DIRECTED BY THE ENGINEER. THE SLOPE DRAIN SHALL CONSIST OF A NON-PERFORATED TEMPORARY DRAINAGE PIPE, 12 INCHES IN DIAMETER.

PLAN VIEW

TEMPORARY BERM AND SLOPE DRAIN DETAILS

(TO BE USED WHEN SHOULDER BERM GUTTER IS REQUIRED)

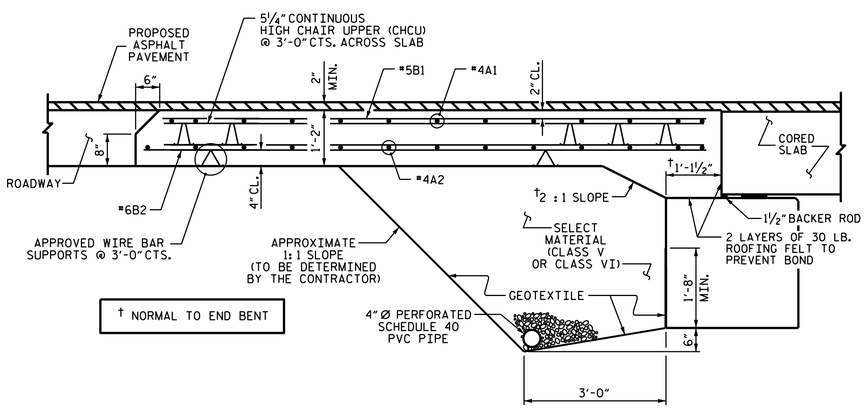

† NORMAL TO END BENT

SECTION THRU SLAB

(TYPE II - MODIFIED APPROACH FILL)

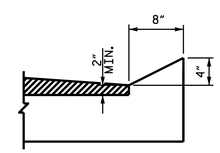

SECTION N-N

CURB DETAILS

SPLICE LENGTHS		
BAR SIZE	EPOXY COATED	UNCOATED
#4	1'-11"	1'-7"
#5	2'-5"	2'-0"
#6	3'-7"	2'-5"

PROJECT NO. BP4.R014.1

HALIFAX COUNTY

STATION: 12+17.70 -L-

STATE OF NORTH CAROLINA
DEPARTMENT OF TRANSPORTATION
RALEIGH

STANDARD
BRIDGE APPROACH SLAB
FOR PRESTRESSED CONCRETE
CORED SLAB UNIT
(SUB-REGIONAL TIER)
90° SKEW

ASSEMBLED BY : DM SHAUT	DATE : 12-23-21
CHECKED BY : TG ZEBLO	DATE : 12-23-21
DRAWN BY : SHS/MAA 5-09	REV. 12-17 MAA/THC
CHECKED BY : BCH 5-09	REV. 08-19 BNB/THC

PLAN PREPARED BY:

Founded 1998

ALPHA & OMEGA GROUP
CIVIL | STRUCTURAL | WATER RESOURCES

ALPHA AND OMEGA GROUP, PC
4601 LAKE BOONE TRAIL, SUITE 3C, RALEIGH, NC 27607

Firm License No. C-1684 www.aogroup.com

THIS DRAWING REVIEWED & ADOPTED FOR USE AT THE REFERENCED LOCATION BY THE UNDERSIGNED:

NORTH CAROLINA PROFESSIONAL SEAL 14455 ENGINEER FEDL. BARTELT

DOCUMENT NOT CONSIDERED FINAL UNLESS ALL SIGNATURES COMPLETED

REVISIONS							SHEET NO.
NO.	BY:	DATE:	NO.	BY:	DATE:		S-25
1			3				TOTAL SHEETS
2			4				26

$$$$$$SYSTIME$$$$$
$$$$$$$$$$$$$$$$$$$$DGN$$$$$$$$$$$$$$$$$$$$$$
$$$$USERNAME$$$$

STD. NO. BAS_33_90S

STANDARD NOTES

DESIGN DATA:

SPECIFICATIONS	A.A.S.H.T.O. (CURRENT)
LIVE LOAD	SEE PLANS
IMPACT ALLOWANCE	SEE A.A.S.H.T.O.
STRESS IN EXTREME FIBER OF STRUCTURAL STEEL - AASHTO M270 GRADE 36	20,000 LBS. PER SQ. IN.
- AASHTO M270 GRADE 50W	27,000 LBS. PER SQ. IN.
- AASHTO M270 GRADE 50	27,000 LBS. PER SQ. IN.
REINFORCING STEEL IN TENSION - GRADE 60	24,000 LBS. PER SQ. IN.
CONCRETE IN COMPRESSION	1,200 LBS. PER SQ. IN.
CONCRETE IN SHEAR	SEE A.A.S.H.T.O.
STRUCTURAL TIMBER - TREATED OR UNTREATED EXTREME FIBER STRESS	1,800 LBS. PER SQ. IN.
COMPRESSION PERPENDICULAR TO GRAIN OF TIMBER	375 LBS. PER SQ. IN.
EQUIVALENT FLUID PRESSURE OF EARTH	30 LBS. PER CU. FT. (MINIMUM)

MATERIAL AND WORKMANSHIP:

EXCEPT AS MAY OTHERWISE BE SPECIFIED ON PLANS OR IN THE SPECIAL PROVISIONS, ALL MATERIAL AND WORKMANSHIP SHALL BE IN ACCORDANCE WITH THE 2018 "STANDARD SPECIFICATIONS FOR ROADS AND STRUCTURES" OF THE N. C. DEPARTMENT OF TRANSPORTATION.

STEEL SHEET PILING FOR PERMANENT OR TEMPORARY APPLICATIONS SHALL BE HOT ROLLED.

CONCRETE:

UNLESS OTHERWISE REQUIRED ON PLANS, CLASS A CONCRETE SHALL BE USED FOR ALL PORTIONS OF ALL STRUCTURES WITH THE EXCEPTION THAT: CLASS AA CONCRETE SHALL BE USED IN BRIDGE SUPERSTRUCTURES, ABUTMENT BACKWALLS, AND APPROACH SLABS; AND CLASS B CONCRETE SHALL BE USED FOR SLOPE PROTECTION AND RIP RAP.

CONCRETE CHAMFERS:

UNLESS OTHERWISE NOTED ON THE PLANS, ALL EXPOSED CORNERS ON STRUCTURES SHALL BE CHAMFERED ¾" WITH THE FOLLOWING EXCEPTIONS: TOP CORNERS OF CURBS MAY BE ROUNDED TO 1½" RADIUS WHICH IS BUILT INTO CURB FORMS; CORNERS OF TRANSVERSE FLOOR EXPANSION JOINTS SHALL BE ROUNDED WITH A ¼" FINISHING TOOL UNLESS OTHERWISE REQUIRED ON PLANS; AND CORNERS OF EXPANSION JOINTS IN THE ROADWAY FACES AND TOPS OF CURBS AND SIDEWALKS SHALL BE ROUNDED TO A ¼" RADIUS WITH A FINISHING STONE OR TOOL UNLESS OTHERWISE REQUIRED ON PLANS.

DOWELS:

DOWELS WHEN INDICATED ON PLANS AS FOR CULVERT EXTENSIONS, SHALL BE EMBEDDED AT LEAST 12" INTO THE OLD CONCRETE AND GROUTED INTO PLACE WITH 1:2 CEMENT MORTAR.

ALLOWANCE FOR DEAD LOAD DEFLECTION, SETTLEMENT, ETC. IN CASTING SUPERSTRUCTURES:

BRIDGES SHALL BE BUILT ON THE GRADE OR VERTICAL CURVE SHOWN ON PLANS. SLABS, CURBS AND PARAPETS SHALL CONFORM TO THE GRADE OR CURVE.

ALL DIMENSIONS WHICH ARE GIVEN IN SECTION AND ARE AFFECTED BY DEAD LOAD DEFLECTIONS ARE DIMENSIONS AT CENTER LINE OF BEARING UNLESS OTHERWISE NOTED ON PLANS. IN SETTING FORMS FOR STEEL BEAM BRIDGES AND PRESTRESSED CONCRETE GIRDER BRIDGES, ADJUSTMENTS SHALL BE MADE DUE TO THE DEAD LOAD DEFLECTIONS FOR THE ELEVATIONS SHOWN. WHERE BLOCKS ARE SHOWN OVER BEAMS FOR BUILDING UP TO THE SLAB, THE VERTICAL DIMENSIONS OF THE BLOCKS SHALL BE ADJUSTED BETWEEN BEARINGS TO COMPENSATE FOR DEAD LOAD DEFLECTIONS, VERTICAL CURVE ORDINATE, AND ACTUAL BEAM CAMBER. WHERE BOTTOM OF SLAB IS IN LINE WITH BOTTOM OF TOP FLANGES, DEPTH OF SLAB BETWEEN BEARINGS SHALL BE ADJUSTED TO COMPENSATE FOR DEAD LOAD DEFLECTION, VERTICAL CURVE ORDINATE, AND ACTUAL BEAM CAMBER.

IN SETTING FALSEWORK AND FORMS FOR REINFORCED CONCRETE SPANS, AN ALLOWANCE SHALL BE MADE FOR DEAD LOAD DEFLECTIONS, SETTLEMENT OF FALSEWORK, AND PERMANENT CAMBER WHICH SHALL BE PROVIDED FOR IN ADDITION TO THE ELEVATIONS SHOWN. AFTER REMOVAL OF THE FALSEWORK, THE FINISHED STRUCTURES SHALL CONFORM TO THE PROFILE AND ELEVATIONS SHOWN ON THE PLANS AND CONSTRUCTION ELEVATIONS FURNISHED BY THE ENGINEER.

DETAILED DRAWINGS FOR FALSEWORK OR FORMS FOR BRIDGE SUPERSTRUCTURE AND ANY STRUCTURE OR PARTS OF A STRUCTURE AS NOTED ON THE PLANS SHALL BE SUBMITTED TO THE ENGINEER FOR APPROVAL BEFORE CONSTRUCTION OF THE FALSEWORK OR FORMS IS STARTED.

REINFORCING STEEL:

ALL REINFORCING STEEL SHALL BE DEFORMED. DIMENSIONS RELATIVE TO PLACEMENT OF REINFORCING ARE TO CENTERS OF BARS UNLESS OTHERWISE INDICATED IN THE PLANS. DIMENSIONS ON BAR DETAILS ARE TO CENTERS OF BARS OR ARE OUT TO OUT AS INDICATED ON PLANS.

WIRE BAR SUPPORTS SHALL BE PROVIDED FOR REINFORCING STEEL WHERE INDICATED ON THE PLANS. WHEN BAR SUPPORT PIECES ARE PLACED IN CONTINUOUS LINES, THEY SHALL BE SO PLACED THAT THE ENDS OF THE SUPPORTING WIRES SHALL BE LAPPED TO LOCK LEGS ON ADJOINING PIECES.

STRUCTURAL STEEL:

AT THE CONTRACTOR'S OPTION, HE MAY SUBSTITUTE ⅞" Ø SHEAR STUDS FOR THE ¾" Ø STUDS SPECIFIED ON THE PLANS. THIS SUBSTITUTION SHALL BE MADE AT THE RATE OF 3 - ⅞" Ø STUDS FOR 4 - ¾" Ø STUDS, AND STUD SPACING CHANGES SHALL BE MADE AS NECESSARY TO PROVIDE THE SAME EQUIVALENT NUMBER OF ⅞" Ø STUDS ALONG THE BEAM AS SHOWN FOR ¾" Ø STUDS BASED ON THE RATIO OF 3 - ⅞" Ø STUDS FOR 4 - ¾" Ø STUDS. STUDS OF THE LENGTH SPECIFIED ON THE PLANS MUST BE PROVIDED. THE MAXIMUM SPACING SHALL BE 2'-0".

EXCEPT AT THE INTERIOR SUPPORTS OF CONTINUOUS BEAMS WHERE THE COVER PLATE IS IN CONTACT WITH BEARING PLATE, THE CONTRACTOR MAY, AT HIS OPTION, SUBSTITUTE FOR THE COVER PLATES DESIGNATED ON THE PLANS COVER PLATES OF THE EQUIVALENT AREA PROVIDED THESE PLATES ARE AT LEAST 5/16" IN THICKNESS AND DO NOT EXCEED A WIDTH EQUAL TO THE FLANGE WIDTH LESS 2" OR A THICKNESS EQUAL TO 2 TIMES THE FLANGE THICKNESS. THE SIZE OF FILLET WELDS SHALL CONFORM TO THE REQUIREMENTS OF THE CURRENT ANSI/AASHTO/AWS "BRIDGE WELDING CODE". ELECTROSLAG WELDING WILL NOT BE PERMITTED.

WITH THE SOLE EXCEPTION OF EDGES AT SURFACES WHICH BEAR ON OTHER SURFACES, ALL SHARP EDGES AND ENDS OF SHAPES AND PLATES SHALL BE SLIGHTLY ROUNDED BY SUITABLE MEANS TO A RADIUS OF APPROXIMATELY 1/16 INCH OR EQUIVALENT FLAT SURFACE AT A SUITABLE ANGLE PRIOR TO PAINTING, GALVANIZING, OR METALLIZING.

HANDRAILS AND POSTS:

METAL STANDARDS AND FACES OF THE CONCRETE END POSTS FOR THE METAL RAIL SHALL BE SET NORMAL TO THE GRADE OF THE CURB, UNLESS OTHERWISE SHOWN ON PLANS. THE METAL RAIL AND TOPS OF CONCRETE POSTS USED WITH THE ALUMINUM RAIL SHALL BE BUILT PARALLEL TO THE GRADE OF THE CURB.

METAL HANDRAILS SHALL BE IN ACCORDANCE WITH THE PLANS. RAILS SHALL BE AS MANUFACTURED FOR BRIDGE RAILING. CASTINGS SHALL BE OF A UNIFORM APPEARANCE. FINS AND OTHER DEFORMATIONS RESULTING FROM CASTING OR OTHERWISE SHALL BE REMOVED IN A MANNER SO THAT A UNIFORM COLORING OF THE COMPLETED CASTING SHALL BE OBTAINED. CASTINGS WITH DISCOLORATIONS OR OF NON-UNIFORM COLORING WILL NOT BE ACCEPTED. CERTIFIED MILL REPORTS ARE REQUIRED FOR METAL RAILS AND POSTS.

SPECIAL NOTES:

GENERALLY, IN CASE OF DISCREPANCY, THIS STANDARD SHEET OF NOTES SHALL GOVERN OVER THE SPECIFICATIONS, BUT THE REMAINDER OF THE PLANS SHALL GOVERN OVER NOTES HEREON, AND SPECIAL PROVISIONS SHALL GOVERN OVER ALL. SEE SPECIFICATIONS ARTICLE 105-4.

ENGLISH

JANUARY, 1990