DocuSign Envelope ID: FE584E6F-C9DA-48A2-A14A-7A0A0AE30F04

09/08/99

TIP PROJECT: B-6001

CONTRACT: DD00354

See Sheet 1A For Index of Sheets

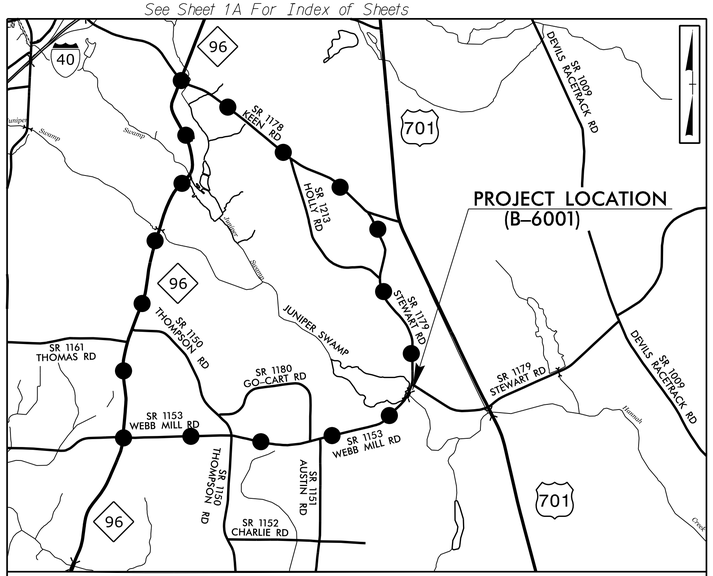

VICINITY MAP
(NOT TO SCALE)

DETOUR ROUTE (APPROXIMATE LENGTH = 7 MILES)

STATE OF NORTH CAROLINA
DIVISION OF HIGHWAYS

JOHNSTON COUNTY

STATE	STATE PROJECT REFERENCE NO.	SHEET NO.	TOTAL SHEETS
N.C.	B-6001	1	

STATE PROJ. NO.	F.A. PROJ. NO.	DESCRIPTION
48196.1.1	BRZ-1153(009)	PE
48196.2.1	BRZ-1153(009)	ROW /UTIL
48196.3.1	BRZ-1153(009)	CONST.

NAD 83/2011

LOCATION: REPLACE BRIDGE NO. 68 ON SR 1153 (WEBB MILL RD) OVER JUNIPER SWAMP

TYPE OF WORK: GRADING, DRAINAGE, PAVING, AND STRUCTURE

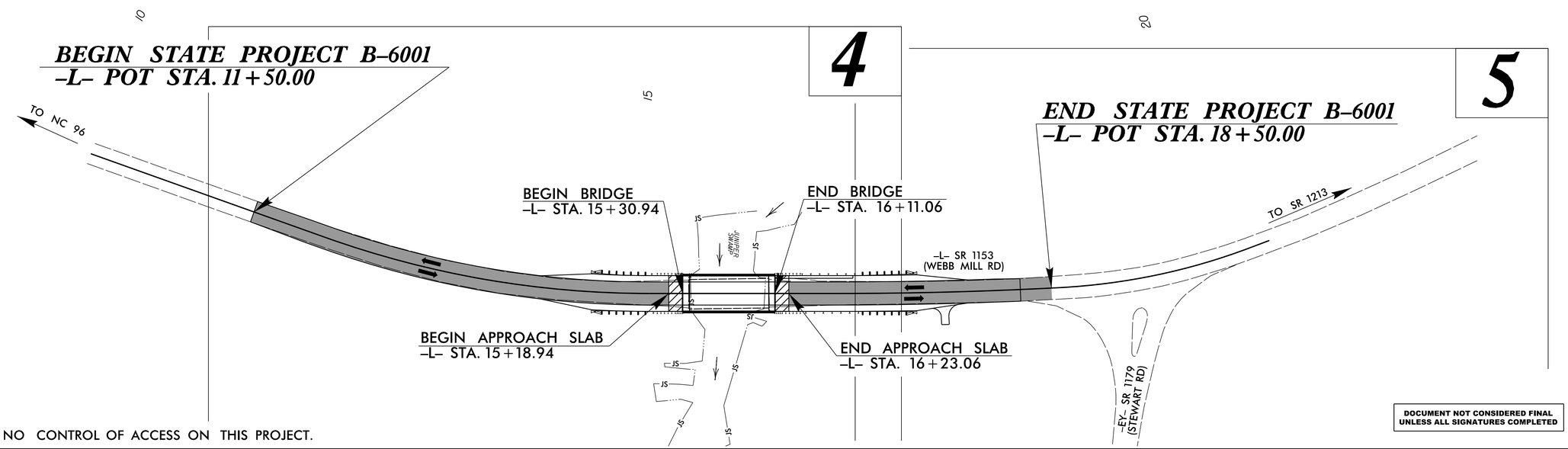

THERE IS NO CONTROL OF ACCESS ON THIS PROJECT.

DOCUMENT NOT CONSIDERED FINAL UNLESS ALL SIGNATURES COMPLETED

GRAPHIC SCALES

20 10 0 20 40
PLANS

20 10 0 20 40
PROFILE (HORIZONTAL)

4 2 0 4 8
PROFILE (VERTICAL)

DESIGN DATA

ADT 2016 = 290
ADT 2038 = 450

D = 50 %
T = 6 % *
V = 40 MPH
* TTST = 3 DUAL 3
FUNC CLASS =
LOCAL
SUBREGIONAL TIER

PROJECT LENGTH

LENGTH ROADWAY STATE PROJECT B-6001	=	0.118 MILES
LENGTH STRUCTURES STATE PROJECT B-6001	=	0.015 MILES
TOTAL LENGTH STATE PROJECT B-6001	=	0.133 MILES

Prepared for:
HIGHWAY DIVISION 4
509 WARD BLVD
WILSON, NC 27895

2018 STANDARD SPECIFICATIONS

RIGHT OF WAY DATE:
JANUARY 31, 2019

LETTING DATE:
AUGUST 10, 2021

Prepared by:
NV5
NV5 ENGINEERS & CONSULTANTS, INC.
3300 REGENCY PARKWAY, SUITE 100
CARY, NC 27518
P: 919.851.1912 www.NV5.com
NC License # F-1333

L. KEVIN AUSTIN, PE
PROJECT MANAGER

MICHAEL ANDREW HOLT, PE
ROADWAY PROJECT DESIGN ENGINEER

RUSSELL E. BROADWELL, PE
NCDOT CONTACT

HYDRAULICS ENGINEER

7/7/2021

DocuSigned by:
Andrea Hayden
ADC9AFE118E8413...
P.E.
SIGNATURE:

NORTH CAROLINA PROFESSIONAL SEAL 028933 ENGINEER ANDREA S. HAYDEN

ROADWAY DESIGN ENGINEER

7/7/2021

DocuSigned by:
Michael A. Holt
510734F8ED7041B...
P.E.
SIGNATURE:

NORTH CAROLINA PROFESSIONAL SEAL 27334 ENGINEER MICHAEL ANDREW HOLT

STATE OF NORTH CAROLINA DEPARTMENT OF TRANSPORTATION

7/6/2021
R:\Roadway\Proj\500068_rdy_tsh.dgn
default

DocuSign Envelope ID: FE584E6F-C9DA-48A2-A14A-7A0A0AE30F04

8/17/99

PROJECT REFERENCE NO.	SHEET NO.
B-6001	1A

ROADWAY DESIGN ENGINEER

NORTH CAROLINA PROFESSIONAL ENGINEER SEAL 27334 MICHAEL ANDREW IDOL

6/30/2021

DOCUMENT NOT CONSIDERED FINAL UNLESS ALL SIGNATURES COMPLETED

INDEX OF SHEETS

SHEET #	DESCRIPTION
1	TITLE SHEET
1A	INDEX OF SHEETS, GENERAL NOTES, & LIST OF STANDARD DRAWINGS
1B	CONVENTIONAL PLAN SHEET SYMBOLS
1C-1 THRU 1C-2	SURVEY CONTROL SHEETS
2A-1	PAVEMENT SCHEDULE AND TYPICAL SECTIONS
2C-1 THRU 2C-3	DETAILS FOR GUARDRAIL INSTALLATION & FOR GUARDRAIL STRUCTURE ANCHOR UNITS
3B-1	SUMMARIES OF GUARDRAIL, EARTHWORK, ASPHALT PAVEMENT REMOVAL & SHOULDER BERM GUTTER
3D-1	SUMMARY OF DRAINAGE
4 THRU 6	PLAN & PROFILE SHEETS
TMP-1 THRU TMP-2	TRANSPORTATION MANAGEMENT PLAN
SD-1	SPECIAL SIGN DESIGN
EC-1 THRU EC-7	EROSION CONTROL PLANS
RF-1	REFORESTATION
UC-1 THRU UC-5	UTILITY CONSTUCTION PLANS
X-1 THRU X-4	CROSS-SECTIONS
S-1 THRU S-18	STRUCTURE PLANS

STANDARD SPECIFICATIONS

GENERAL NOTES:

2018 SPECIFICATIONS
EFFECTIVE: 01-16-2018
REVISED:

GRADE LINE:
GRADING AND SURFACING:

THE GRADE LINES SHOWN DENOTE THE FINISHED ELEVATION OF THE PROPOSED SURFACING AT GRADE POINTS SHOWN ON THE TYPICAL SECTIONS. GRADE LINES MAY BE ADJUSTED AT THEIR BEGINNING AND ENDING AND AT STRUCTURES AS DIRECTED BY THE ENGINEER IN ORDER TO SECURE A PROPER TIE-IN.

CLEARING:

CLEARING ON THIS PROJECT SHALL BE PERFORMED TO THE LIMITS ESTABLISHED BY METHOD II.

SUPERELEVATION:

ALL CURVES ON THIS PROJECT SHALL BE SUPERELEVATED IN ACCORDANCE WITH STD. NO. 225.04 USING THE RATE OF SUPERELEVATION AND RUNOFF SHOWN ON THE PLANS. SUPERELEVATION IS TO BE REVOLVED ABOUT THE GRADE POINTS SHOWN ON THE TYPICAL SECTIONS.

SHOULDER CONSTRUCTION:

ASPHALT, EARTH, AND CONCRETE SHOULDER CONSTRUCTION ON THE HIGH SIDE OF SUPERELEVATED CURVES SHALL BE IN ACCORDANCE WITH STD. NO. 560.01

SIDE ROADS:

THE CONTRACTOR WILL BE REQUIRED TO DO ALL NECESSARY WORK TO PROVIDE SUITABLE CONNECTIONS WITH ALL ROADS, STREETS, AND DRIVES ENTERING THIS PROJECT. THIS WORK WILL BE PAID FOR AT THE CONTRACT UNIT PRICE FOR THE PARTICULAR ITEMS INVOLVED.

GUARDRAIL:

THE GUARDRAIL LOCATIONS SHOWN ON THE PLANS MAY BE ADJUSTED DURING CONSTRUCTION AS DIRECTED BY THE ENGINEER. THE CONTRACTOR SHOULD CONSULT WITH THE ENGINEER PRIOR TO ORDERING GUARDRAIL MATERIAL.

SUBSURFACE PLANS:

NO SUBSURFACE PLANS ARE AVAILABLE ON THIS PROJECT. THE CONTRACTOR SHOULD MAKE HIS OWN INVESTIGATION AS TO THE SUBSURFACE CONDITIONS.

END BENTS:

THE ENGINEER SHALL CHECK THE STRUCTURE END BENT PLANS, DETAILS, AND CROSS-SECTION PRIOR TO SETTING OF THE SLOPE STAKES FOR THE EMBANKMENT OR EXCAVATION APPROACHING A BRIDGE.

UTILITIES:

ANY RELOCATION OF EXISTING UTILITIES WILL BE ACCOMPLISHED BY OTHERS.

RIGHT-OF-WAY MARKERS:

ALL RIGHT-OF-WAY MARKERS ON THIS PROJECT SHALL BE PLACED BY OTHERS.

LIST OF STANDARD DRAWINGS

EFF. 01-16-2018
REV.

2018 ROADWAY ENGLISH STANDARD DRAWINGS

The following Roadway Standards as appear in "Roadway Standard Drawings" Highway Design Branch - N. C. Department of Transportation - Raleigh, N. C., Dated January, 2018 are applicable to this project and by reference hereby are considered a part of these plans:

STD.NO.	TITLE
DIVISION 2 - EARTHWORK	
200.02	Method of Clearing - Method II
225.02	Guide for Grading Subgrade - Secondary and Local
225.04	Method of Obtaining Superelevation - Two Lane Pavement
275.01	Rock Plating
DIVISION 3 - PIPE CULVERTS	
300.01	Method of Pipe Installation
310.10	Driveway Pipe Construction
DIVISION 4 - MAJOR STRUCTURES	
422.02	Reinforced Bridge Approach Fills - Type II Modified Approach Fill
DIVISION 5 - SUBGRADE, BASES AND SHOULDERS	
560.01	Method of Shoulder Construction - High Side of Superelevated Curve - Method I
DIVISION 6 - ASPHALT BASES AND PAVEMENTS	
654.01	Pavement Repairs
DIVISION 8 - INCIDENTALS	
840.00	Concrete Base Pad for Drainage Structures
840.01	Brick Catch Basin - 12" thru 54" Pipe
840.03	Frame, Grates and Hood - for Use on Standard Catch Basin
840.29	Frames and Narrow Slot Flat Grates
840.35	Traffic Bearing Grated Drop Inlet - for Cast Iron Double Frame and Grates
840.72	Pipe Collar
846.04	Drop Inlet Installation in Shoulder Berm Gutter
862.01	Guardrail Placement
862.02	Guardrail Installation
862.03	Structure Anchor Units
876.02	Guide for Rip Rap at Pipe Outlets

6/29/2021
R:\Roadway\Proj\5002068_rdy_psh_1a.dgn
Erica.Martin

DocuSign Envelope ID: FE584E6F-C9DA-48A2-A14A-7A0A0AE30F04

12/2/2016

PROJECT REFERENCE NO.	SHEET NO.
B-6001	1B

STATE OF NORTH CAROLINA, DIVISION OF HIGHWAYS

CONVENTIONAL PLAN SHEET SYMBOLS

Note: Not to Scale

**S.U.E. = Subsurface Utility Engineering*

BOUNDARIES AND PROPERTY:

- State Line
- County Line
- Township Line
- City Line
- Reservation Line
- Property Line
- Existing Iron Pin — EIP
- Computed Property Corner
- Property Monument — ECM
- Parcel/Sequence Number — 123
- Existing Fence Line
- Proposed Woven Wire Fence
- Proposed Chain Link Fence
- Proposed Barbed Wire Fence
- Existing Wetland Boundary — WLB
- Proposed Wetland Boundary — WLB
- Existing Endangered Animal Boundary — EAB
- Existing Endangered Plant Boundary — EPB
- Existing Historic Property Boundary — HPB
- Known Contamination Area: Soil — S
- Potential Contamination Area: Soil — S
- Known Contamination Area: Water — W
- Potential Contamination Area: Water — W
- Contaminated Site: Known or Potential

BUILDINGS AND OTHER CULTURE:

- Gas Pump Vent or U/G Tank Cap
- Sign — S
- Well — W
- Small Mine
- Foundation
- Area Outline
- Cemetery
- Building
- School
- Church
- Dam

HYDROLOGY:

- Stream or Body of Water
- Hydro, Pool or Reservoir
- Jurisdictional Stream — JS
- Buffer Zone 1 — BZ 1
- Buffer Zone 2 — BZ 2
- Flow Arrow
- Disappearing Stream
- Spring
- Wetland
- Proposed Lateral, Tail, Head Ditch — FLOW
- False Sump

RAILROADS:

- Standard Gauge — CSX TRANSPORTATION
- RR Signal Milepost — MILEPOST 35
- Switch — SWITCH
- RR Abandoned
- RR Dismantled

RIGHT OF WAY & PROJECT CONTROL:

- Secondary Horiz and Vert Control Point
- Primary Horiz Control Point
- Primary Horiz and Vert Control Point
- Exist Permanent Easment Pin and Cap
- New Permanent Easement Pin and Cap
- Vertical Benchmark
- Existing Right of Way Marker
- Existing Right of Way Line
- New Right of Way Line — RW
- New Right of Way Line with Pin and Cap — RW
- New Right of Way Line with Concrete or Granite R/W Marker — RW
- New Control of Access Line with Concrete C/A Marker — CA
- Existing Control of Access — CA
- New Control of Access — CA
- Existing Easement Line — E
- New Temporary Construction Easement — E
- New Temporary Drainage Easement — TDE
- New Permanent Drainage Easement — PDE
- New Permanent Drainage / Utility Easement — DUE
- New Permanent Utility Easement — PUE
- New Temporary Utility Easement — TUE
- New Aerial Utility Easement — AUE

ROADS AND RELATED FEATURES:

- Existing Edge of Pavement
- Existing Curb
- Proposed Slope Stakes Cut — C
- Proposed Slope Stakes Fill — F
- Proposed Curb Ramp — CR
- Existing Metal Guardrail
- Proposed Guardrail
- Existing Cable Guiderail
- Proposed Cable Guiderail
- Equality Symbol
- Pavement Removal

VEGETATION:

- Single Tree
- Single Shrub
- Hedge
- Woods Line
- Orchard
- Vineyard — Vineyard

EXISTING STRUCTURES:

MAJOR:

- Bridge, Tunnel or Box Culvert — CONC
- Bridge Wing Wall, Head Wall and End Wall — CONC WW

MINOR:

- Head and End Wall — CONC HW
- Pipe Culvert
- Footbridge
- Drainage Box: Catch Basin, DI or JB — CB
- Paved Ditch Gutter
- Storm Sewer Manhole — S
- Storm Sewer — S

UTILITIES:

POWER:

- Existing Power Pole
- Proposed Power Pole
- Existing Joint Use Pole
- Proposed Joint Use Pole
- Power Manhole — P
- Power Line Tower
- Power Transformer
- U/G Power Cable Hand Hole
- H-Frame Pole
- U/G Power Line LOS B (S.U.E.*) — P
- U/G Power Line LOS C (S.U.E.*) — P
- U/G Power Line LOS D (S.U.E.*) — P

TELEPHONE:

- Existing Telephone Pole
- Proposed Telephone Pole
- Telephone Manhole — T
- Telephone Pedestal — T
- Telephone Cell Tower
- U/G Telephone Cable Hand Hole
- U/G Telephone Cable LOS B (S.U.E.*) — T
- U/G Telephone Cable LOS C (S.U.E.*) — T
- U/G Telephone Cable LOS D (S.U.E.*) — T
- U/G Telephone Conduit LOS B (S.U.E.*) — TC
- U/G Telephone Conduit LOS C (S.U.E.*) — TC
- U/G Telephone Conduit LOS D (S.U.E.*) — TC
- U/G Fiber Optics Cable LOS B (S.U.E.*) — T FO
- U/G Fiber Optics Cable LOS C (S.U.E.*) — T FO
- U/G Fiber Optics Cable LOS D (S.U.E.*) — T FO

WATER:

- Water Manhole — W
- Water Meter
- Water Valve
- Water Hydrant
- U/G Water Line LOS B (S.U.E*) — W
- U/G Water Line LOS C (S.U.E*) — W
- U/G Water Line LOS D (S.U.E*) — W
- Above Ground Water Line — A/G Water

TV:

- TV Pedestal — C
- TV Tower
- U/G TV Cable Hand Hole — HH
- U/G TV Cable LOS B (S.U.E.*) — TV
- U/G TV Cable LOS C (S.U.E.*) — TV
- U/G TV Cable LOS D (S.U.E.*) — TV
- U/G Fiber Optic Cable LOS B (S.U.E.*) — TV FO
- U/G Fiber Optic Cable LOS C (S.U.E.*) — TV FO
- U/G Fiber Optic Cable LOS D (S.U.E.*) — TV FO

GAS:

- Gas Valve
- Gas Meter
- U/G Gas Line LOS B (S.U.E.*) — G
- U/G Gas Line LOS C (S.U.E.*) — G
- U/G Gas Line LOS D (S.U.E.*) — G
- Above Ground Gas Line — A/G Gas

SANITARY SEWER:

- Sanitary Sewer Manhole
- Sanitary Sewer Cleanout
- U/G Sanitary Sewer Line — SS
- Above Ground Sanitary Sewer — A/G Sanitary Sewer
- SS Forced Main Line LOS B (S.U.E.*) — FSS
- SS Forced Main Line LOS C (S.U.E.*) — FSS
- SS Forced Main Line LOS D (S.U.E.*) — FSS

MISCELLANEOUS:

- Utility Pole
- Utility Pole with Base
- Utility Located Object
- Utility Traffic Signal Box — S
- Utility Unknown U/G Line LOS B (S.U.E.*) — ?UTL
- U/G Tank; Water, Gas, Oil
- Underground Storage Tank, Approx. Loc. — UST
- A/G Tank; Water, Gas, Oil
- Geoenvironmental Boring
- U/G Test Hole LOS A (S.U.E.*)
- Abandoned According to Utility Records — AATUR
- End of Information — E.O.I.

DocuSign Envelope ID: FE584E6F-C9DA-48A2-A14A-7A0A0AE30F04

6/2/99

PROJECT REFERENCE NO.	SHEET NO.
B-6001	1C-1
Location and Surveys	

PROJECT SURVEYOR

SURVEY CONTROL SHEET B-6001

W/ EXISTING CENTERLINE ALIGNMENTS PRIOR TO CONSTRUCTION

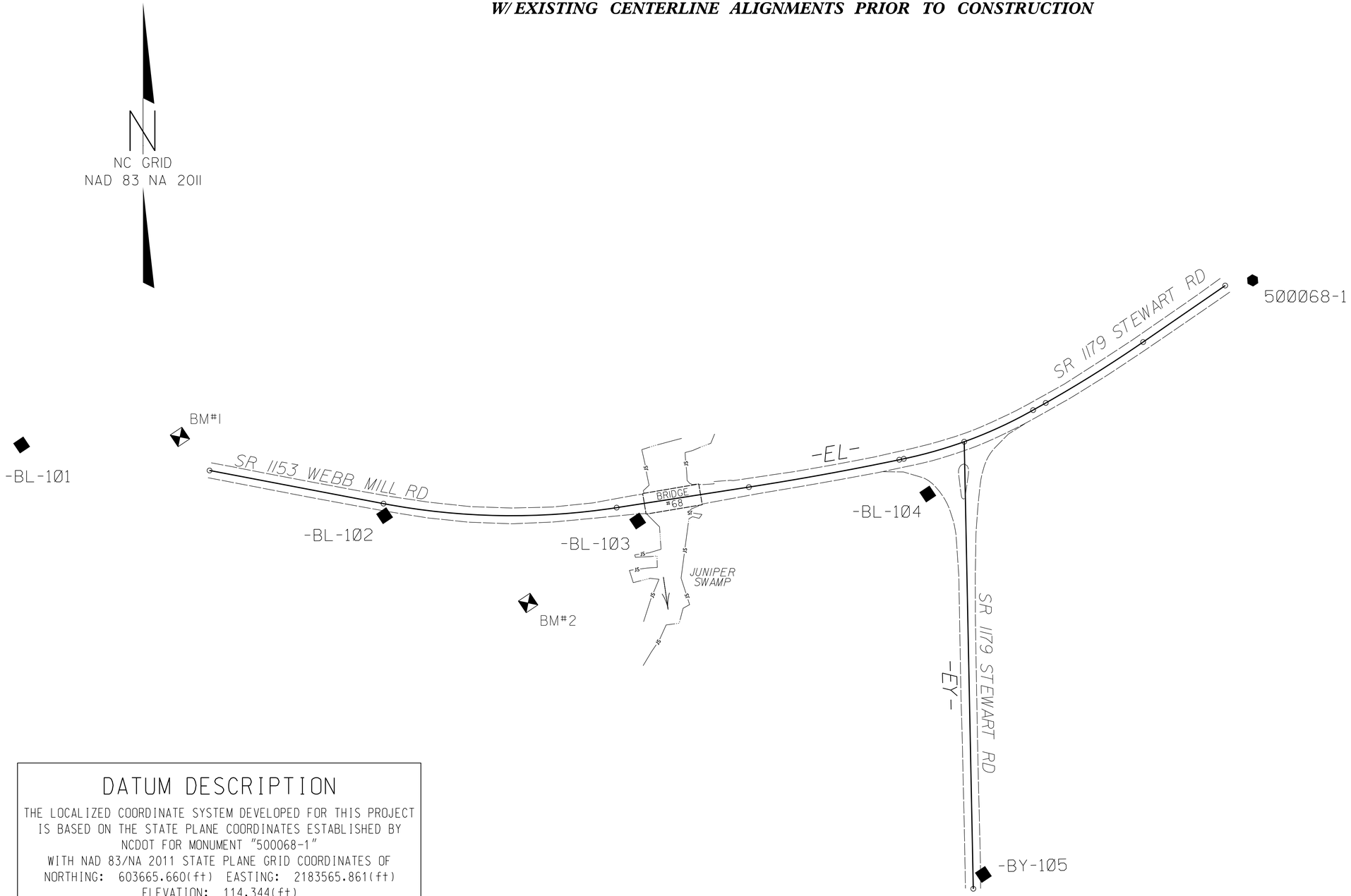

DATUM DESCRIPTION

THE LOCALIZED COORDINATE SYSTEM DEVELOPED FOR THIS PROJECT IS BASED ON THE STATE PLANE COORDINATES ESTABLISHED BY NCDOT FOR MONUMENT "500068-1"
WITH NAD 83/NA 2011 STATE PLANE GRID COORDINATES OF
NORTHING: 603665.660(ft) EASTING: 2183565.861(ft)
ELEVATION: 114.344(ft)
THE AVERAGE COMBINED GRID FACTOR USED ON THIS PROJECT (GROUND TO GRID) IS: 0.99987600
THE N.C. LAMBERT GRID BEARING AND LOCALIZED HORIZONTAL GROUND DISTANCE FROM "500068-1" TO -L- STATION IS

ALL LINEAR DIMENSIONS ARE LOCALIZED HORIZONTAL DISTANCES
VERTICAL DATUM USED IS NAVD 88

NOTES:

1. IF FURTHER INFORMATION REGARDING PROJECT CONTROL IS NEEDED, PLEASE CONTACT THE LOCATION AND SURVEYS UNIT.
2. PROJECT CONTROL WAS ESTABLISHED USING GNSS, THE GLOBAL NAVIGATION SATELLITE SYSTEM.
3. NOTE: DRAWING NOT TO SCALE

3/4/2021
R:\Project Survey\500068.ls.lcl.dgn
Erica Martin

DocuSign Envelope ID: FE584E6F-C9DA-48A2-A14A-7A0A0AE30F04

6/2/99

PROJECT REFERENCE NO.	SHEET NO.
B-6001	1C-2
Location and Surveys	

PROJECT SURVEYOR

SURVEY CONTROL SHEET B-6001

W/ EXISTING CENTERLINE ALIGNMENTS PRIOR TO CONSTRUCTION

BASELINE DATA

BL POINT	DESC.	NORTH	EAST	ELEVATION
101	BL-101	602306.4740	2182896.9160	127.67
102	BL-102	602626.1950	2183215.0040	112.57
103	BL-103	602879.0080	2183392.2030	111.40
104	BL-104	603191.3420	2183561.8560	109.55
1	500068-1	603665.6600	2183565.8610	114.34
2	500068-2	604440.4530	2183566.1070	122.51

BY

POINT	DESC.	NORTH	EAST	ELEVATION
105	BY-105	602989.2380	2183985.1690	110.27

BENCHMARK DATA

BM1 ELEVATION = 122.57
N 602472 E 2182996
TIE SPIKE IN 20" PINE

BM2 ELEVATION = 108.29
N 602712 E 2183401
TIE SPIKE IN 16" OAK

ALIGNMENT DATA

EL

POINT	N	E	BEARING	DIST	DELTA	D	L	T	R
POT	602479.613	2183050.347							
LINE			N 44°36′56.7" E	216.00					
PC	602633.373	2183202.058							
CURVE			N 34°48′21.7" E	284.40	19°37′09.9"(LT)	06°51′53.4"	285.80	144.31	834.63
PT	602866.892	2183364.395							
LINE			N 24°59′46.8" E	163.25					
PC	603014.849	2183433.376							
CURVE			N 23°30′43.8" E	186.41	02°58′06.0"(LT)	01°35′31.9"	186.43	93.24	3598.56
PT	603185.782	2183507.744							
LINE			N 22°01′40.8" E	5.68					
PC	603191.048	2183509.874							
CURVE			N 13°10′10.5" E	168.47	17°43′00.7"(LT)	10°28′28.9"	169.14	85.25	546.99
PT	603355.084	2183548.257							
LINE			N 04°18′40.1" E	17.76					
PC	603372.795	2183549.592							
CURVE			N 01°47′44.6" E	140.06	05°01′50.9"(LT)	03°35′26.3"	140.11	70.10	1595.70
PT	603512.791	2183553.981							
LINE			N 00°43′10.9" W	121.57					
POT	603634.354	2183552.454							

EY

POINT	N	E	BEARING	DIST
POT	603263.892	2183533.465		
LINE			S 57°20′19.4" E	545.59
POT	602969.453	2183992.784		

NOTES:

1. IF FURTHER INFORMATION REGARDING PROJECT CONTROL IS NEEDED, PLEASE CONTACT THE LOCATION AND SURVEYS UNIT.
2. PROJECT CONTROL WAS ESTABLISHED USING GNSS, THE GLOBAL NAVIGATION SATELLITE SYSTEM.
3. NOTE: DRAWING NOT TO SCALE

3/4/2021
R:\Project\Survey\500068.ls.lc2.dgn
Eric Martin

DocuSign Envelope ID: FE584E6F-C9DA-48A2-A14A-7A0A0AE30F04

6/2/99

PROJECT REFERENCE NO.	SHEET NO.
B-6001	2A-1

NV5 ENGINEERS & CONSULTANTS, INC.
6750 TRYON ROAD
CARY, NC 27518
P: 919.851.1912 www.NV5.com
NC License # F-1333
formerly CALYX Engineers & Consultants

ROADWAY DESIGN ENGINEER
Documented by:
Michael Holt SEAL 27334
5/5/2021
NORTH CAROLINA PROFESSIONAL ENGINEER MICHAEL ANDREW HOLT
6/2/2021

PAVEMENT DESIGN ENGINEER
Documented by:
Russell Broadwell SEAL 034345
5/5/2021
NORTH CAROLINA PROFESSIONAL ENGINEER RUSSELL E. BROADWELL
6/2/2021

DOCUMENT NOT CONSIDERED FINAL UNLESS ALL SIGNATURES COMPLETED

PAVEMENT SCHEDULE

C1	PROP. APPROX. 1.5" ASPHALT CONCRETE SURFACE COURSE TYPE S9.5B, AT AN AVERAGE RATE OF 165 LBS. PER SQ. YD.
C2	PROP. APPROX. 3" ASPHALT CONCRETE SURFACE COURSE TYPE S9.5B, AT AN AVERAGE RATE OF 165 LBS. PER SQ. YD. IN EACH OF TWO LAYERS.
C3	PROP. VAR. DEPTH ASPHALT CONCRETE SURFACE COURSE TYPE S9.5B, AT AN AVERAGE RATE OF 110 LBS. PER SQ. YD. PER 1" DEPTH. TO BE PLACED IN LAYERS NOT TO EXCEED 1.5" IN DEPTH.
E1	PROP. APPROX. 4" ASPHALT CONCRETE BASE COURSE, TYPE B25.0C, AT AN AVERAGE RATE OF 456 LBS. PER SQ. YD.
E2	PROP. VAR. DEPTH ASPHALT CONCRETE BASE COURSE, TYPE B25.0C, AT AN AVERAGE RATE OF 114 LBS. PER SQ. YD. PER 1" DEPTH. TO BE PLACE IN LAYERS NOT LESS THAN 3" IN DEPTH OR GREATER THAN 5½" IN DEPTH.
R	PROP. SHOULDER BERM GUTTER
T	EARTH MATERIAL.
U	EXISTING PAVEMENT.
W	VARIABLE DEPTH ASPHALT PAVEMENT (SEE WEDGING DETAIL)
Y	INCIDENTAL MILLING

NOTE: PAVEMENT EDGE SLOPES ARE 1:1 UNLESS SHOWN OTHERWISE.

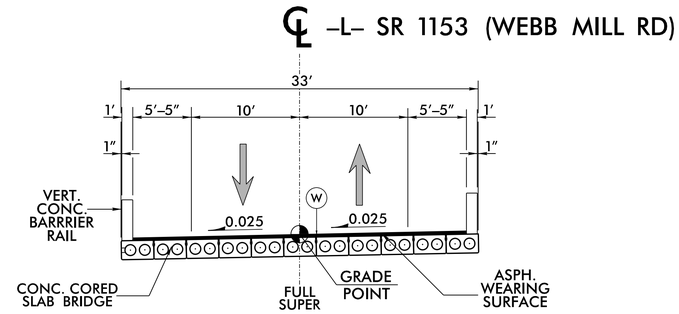

BRIDGE SKETCH NO.1
BRIDGE #68

USE BRIDGE SKETCH NO. 1 AS FOLLOWS:

–L– STA. 15+30.94 (BEGIN BRIDGE) TO
16+11.06 (END BRIDGE)

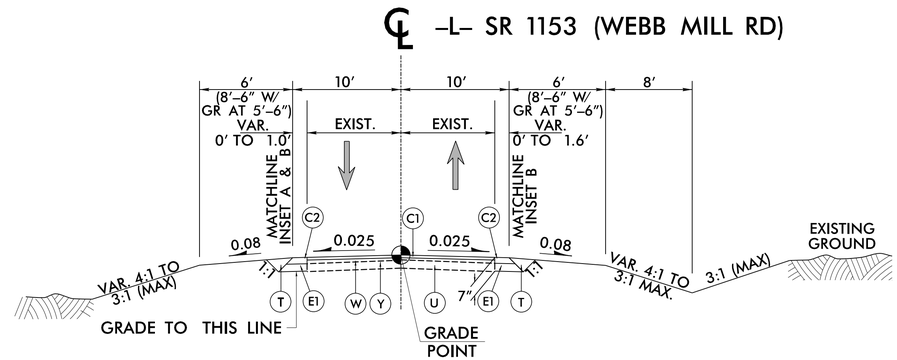

TYPICAL SECTION NO. 1

USE TYPICAL SECTION NO. 1 AS FOLLOWS:

–L– STA. 11+50.00 TO –L– STA. 13+75.00

–L– STA. 16+10.94 (END BRIDGE) TO –L– STA. 17+25
[LEFT SIDE ONLY]

–L– STA. 17+25.00 TO –L– STA. 18+50.00

INSET "A"

SHOULDER BERM LOCATIONS:
–L– STA. 16+23 TO 16+78 (LT.)

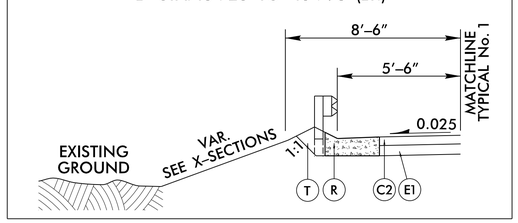

INSET "B"

TYPICAL GUARDRAIL LOCATIONS:

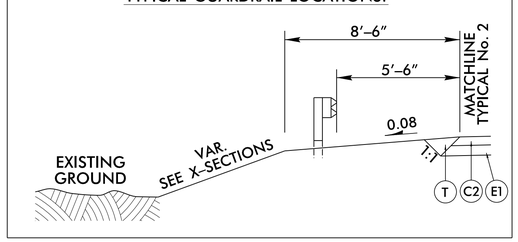

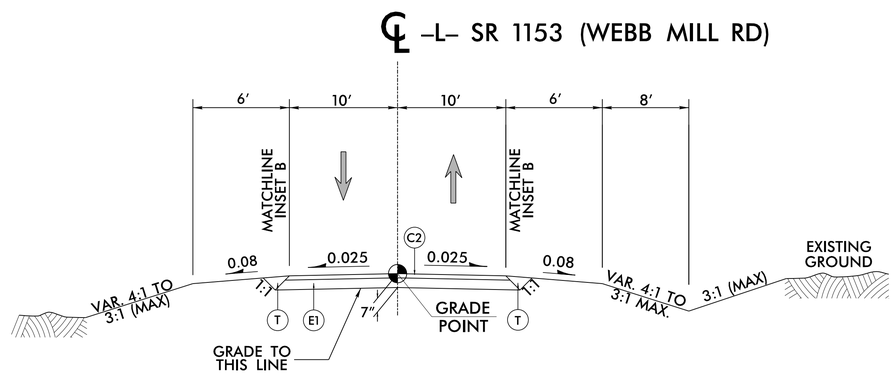

TYPICAL SECTION NO. 2

USE TYPICAL SECTION NO. 2 AS FOLLOWS:

–L– STA. 13+75.00 TO –L– STA. 15+30.94 (BEGIN BRIDGE)

–L– STA. 16+11.06 (END BRIDGE) TO –L– STA. 17+25.00
[RIGHT SIDE ONLY]

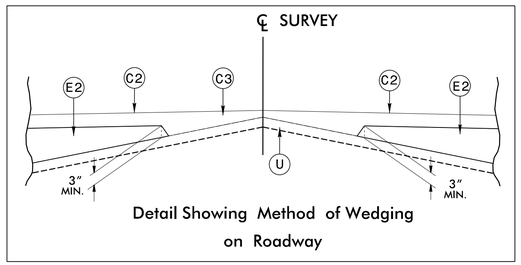

Detail Showing Method of Wedging on Roadway

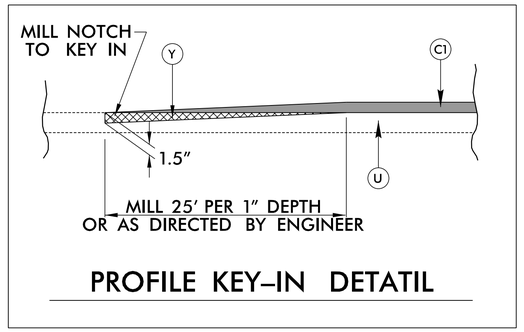

PROFILE KEY–IN DETATIL

6/2/2021
R:\Roadway\Proj\5000068_rdy_typ.dgn
Frico,Martin

DocuSign Envelope ID: FE584E6F-C9DA-48A2-A14A-7A0A0AE30F04

PROJECT REFERENCE NO.	SHEET NO.
B-6001	2C-1

DOCUMENT NOT CONSIDERED FINAL UNLESS ALL SIGNATURES COMPLETED

STATE OF NORTH CAROLINA
DEPT. OF TRANSPORTATION
DIVISION OF HIGHWAYS
RALEIGH, N.C.

ROADWAY DETAIL DRAWING FOR
GUARDRAIL INSTALLATION

SHEET 6 OF 8
862D02

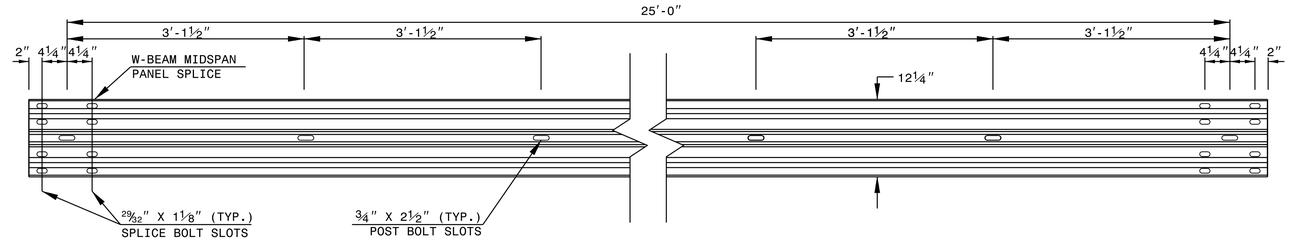

STANDARD W-BEAM GUARDRAIL

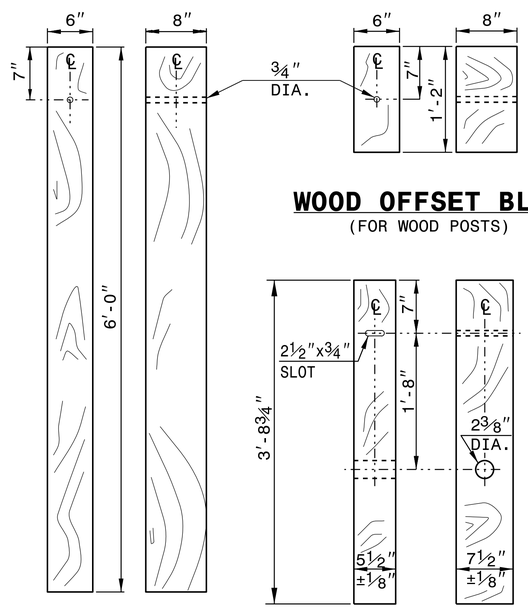

STANDARD LINE POST

WOOD OFFSET BLOCK
(FOR WOOD POSTS)

SHORT WOOD BREAKAWAY POST

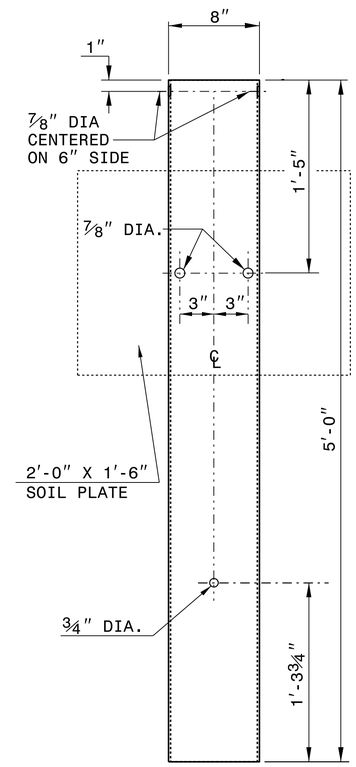

STEEL TUBE
TS 6"x8"x0.1875"

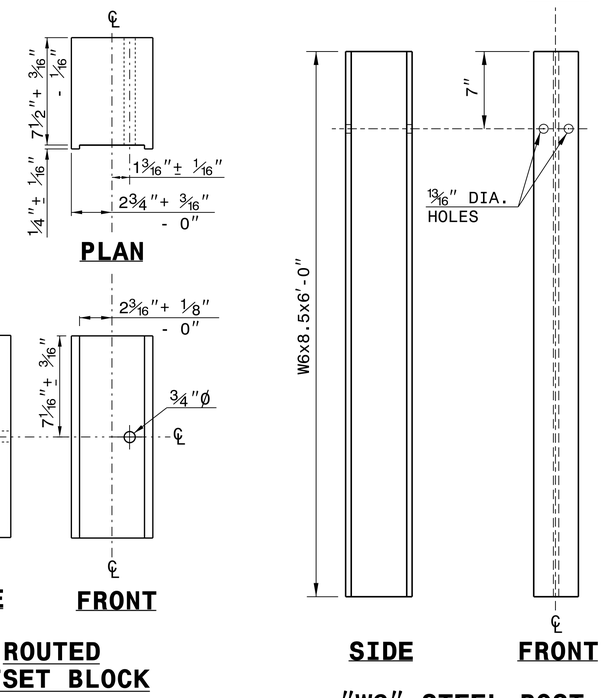

SYSTEM PARTS

STATE OF NORTH CAROLINA
DEPT. OF TRANSPORTATION
DIVISION OF HIGHWAYS
RALEIGH, N.C.

ROADWAY DETAIL DRAWING FOR
GUARDRAIL INSTALLATION

SHEET 6 OF 8
862D02

NORTH CAROLINA PROFESSIONAL SEAL ENGINEER JOEL S. HOWERTON 022966
6/2/2021

CONTRACTS STANDARDS AND DEVELOPMENT UNIT
Office 919-707-6950 FAX 919-250-4119

SEE TITLE BLOCK

ORIGINAL BY: J.HOWERTON DATE: 3-7-2018
MODIFIED BY: DATE:
CHECKED BY: DATE:
FILE SPEC.:

DocuSign Envelope ID: FE384E6F-C9DA-48A2-A14A-7A0A0AE39F04

STATE OF NORTH CAROLINA
DEPT. OF TRANSPORTATION
DIVISION OF HIGHWAYS
RALEIGH, N.C.

ROADWAY DETAIL DRAWING FOR
STRUCTURE ANCHOR UNITS
GUARDRAIL ANCHOR UNIT, TYPE III
FOR ATTACHMENT TO RAIL ON BRIDGE

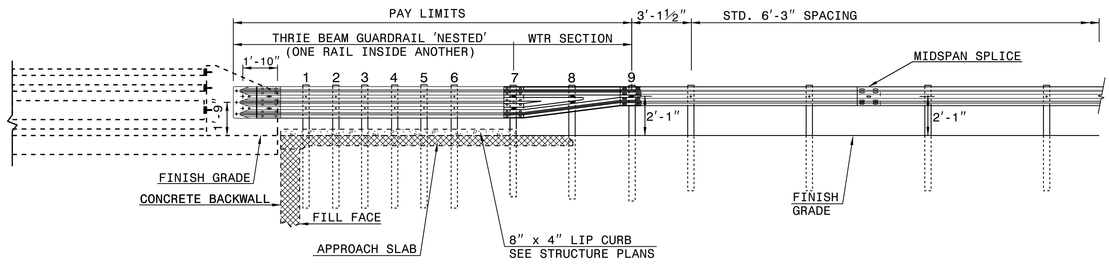

ELEVATION

NOTE:
**POST NOT REQUIRED FOR SKEW ANGLES GREATER THAN 150° OR LESS THAN 30° UNLESS OTHERWISE DIRECTED BY THE ENGINEER.
*THE DISTANCE FROM END OF BRIDGE RAIL TO CENTER LINE OF THE FIRST POST SHOULD BE 11½" IF CONCRETE BACKWALL IS NOT PRESENT.
-SHOULDER BERM GUTTER MUST BE INSTALLED TO THE LIMITS 8" x 4" LIP CURB IS SHOWN IF ANCHOR UNIT IS NOT ADJACENT TO AN APPROACH SLAB.
-MEASURE GUARDRAIL HEIGHT FROM THE TOP OF ADJACENT SURFACE (SHOULDER, BERM, OR GUTTER).
-LAP JOINTS IN THE DIRECTION OF TRAFFIC FLOW.
-SEE SHEET 3 FOR POST SECTIONS 1 THRU 9.

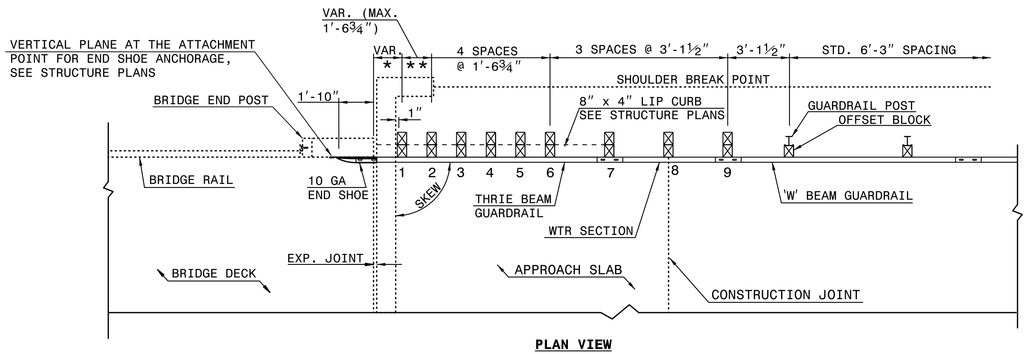

PLAN VIEW

GUARDRAIL ANCHOR UNIT, TYPE III FOR ATTACHMENT TO RAIL ON BRIDGE

SHEET 1 OF 7
862D03

STATE OF NORTH CAROLINA
DEPT. OF TRANSPORTATION
DIVISION OF HIGHWAYS
RALEIGH, N.C.

ROADWAY DETAIL DRAWING FOR
STRUCTURE ANCHOR UNITS
GUARDRAIL ANCHOR UNIT, TYPE III
FOR ATTACHMENT TO RAIL ON BRIDGE

SHEET 1 OF 7
862D03

STATE OF NORTH CAROLINA
DEPT. OF TRANSPORTATION
DIVISION OF HIGHWAYS
RALEIGH, N.C.

ROADWAY DETAIL DRAWING FOR
STRUCTURE ANCHOR UNITS
GUARDRAIL ANCHOR UNIT, TYPE III FOR ATTACHMENT TO
RAIL ON BRIDGE - SUB REGIONAL TIER

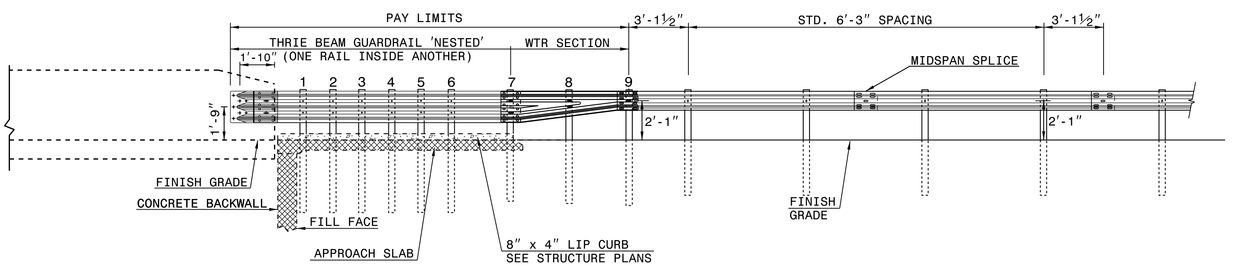

ELEVATION

NOTE:
**POST NOT REQUIRED FOR SKEW ANGLES GREATER THAN 150° OR LESS THAN 30° UNLESS OTHERWISE DIRECTED BY THE ENGINEER.
*THE DISTANCE FROM END OF BRIDGE RAIL TO CENTER LINE OF THE FIRST POST SHOULD BE 11½" IF CONCRETE BACKWALL IS NOT PRESENT.
-SHOULDER BERM GUTTER MUST BE INSTALLED TO THE LIMITS 8" x 4" LIP CURB IS SHOWN IF ANCHOR UNIT IS NOT ADJACENT TO AN APPROACH SLAB.
-MEASURE GUARDRAIL HEIGHT FROM THE TOP OF ADJACENT SURFACE (SHOULDER, BERM, OR GUTTER).
-LAP JOINTS IN THE DIRECTION OF TRAFFIC FLOW.
-SEE SHEET 3 FOR POST SECTIONS 1 THRU 9.

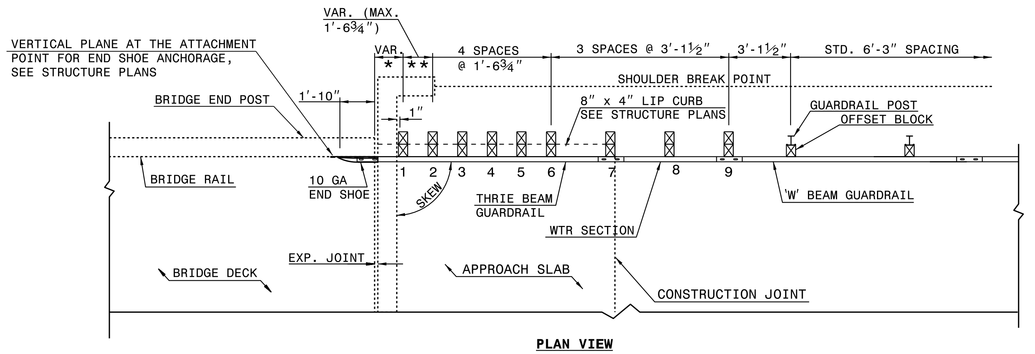

PLAN VIEW

GUARDRAIL ANCHOR UNIT, TYPE III FOR ATTACHMENT TO RAIL ON BRIDGE - SUB REGIONAL TIER

SHEET 2 OF 7
862D03

STATE OF NORTH CAROLINA
DEPT. OF TRANSPORTATION
DIVISION OF HIGHWAYS
RALEIGH, N.C.

ROADWAY DETAIL DRAWING FOR
STRUCTURE ANCHOR UNITS
GUARDRAIL ANCHOR UNIT, TYPE III FOR ATTACHMENT TO
RAIL ON BRIDGE - SUB REGIONAL TIER

SHEET 2 OF 7
862D03

SEE TITLE BLOCK

ORIGINAL BY: J. HOWERTON DATE: 06-22-12
MODIFIED BY: DATE:
CHECKED BY: DATE:
FILE SPEC.:

CONTRACT STANDARDS AND DEVELOPMENT UNIT
Office 919-707-6950 FAX 919-250-4119

DOCUMENT NOT CONSIDERED FINAL UNLESS ALL SIGNATURES COMPLETED

6/22/2021

PROJECT REFERENCE NO. B-6001
SHEET NO. 2C-2

DocuSign Envelope ID: FE384E6F-C9DA-48A2-A14A-7A0A0AE39F04

23-MAY-2017 12:52
S:\Contracts\Contracts\Special Details\jhowerton\Standard Drawings\2012 Standard Drawings\Details in Lieu of Standards\Division 8\862d01 862d03 862d03\862d03.dgn
jhowerton AT CSD-292595

STATE OF NORTH CAROLINA
DEPT. OF TRANSPORTATION
DIVISION OF HIGHWAYS
RALEIGH, N.C.

ROADWAY DETAIL DRAWING FOR
GUARDRAIL ANCHOR UNIT
GUARDRAIL ANCHOR UNIT TYPE B-77
FOR F-SHAPE BARRIER

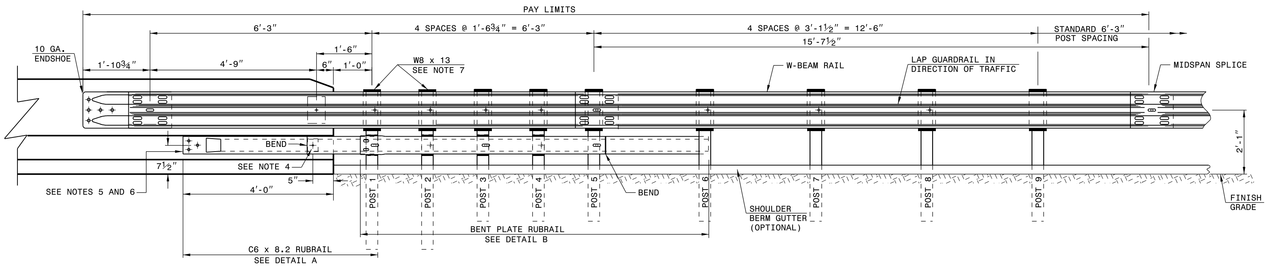

ELEVATION

GENERAL NOTES:
1) POSTS 1 THROUGH 5 REQUIRE AN ADDITIONAL HOLE TO ATTACH LOWER BLOCKOUTS AND/OR RUBRAIL.
2) RUBRAIL BLOCKOUTS LOCATED ON POSTS 1 THROUGH 4 ARE OFFSET DRILLED AND SECURED WITH ⅝" BUTTONHEAD BOLTS (SEE CHART FOR BOLT LENGTHS). SECURE BLOCKS ONLY TO POSTS 2 AND 4. SECURE RUBRAIL AND BLOCKOUTS TO POSTS 1 AND 3. RUBRAIL IS SECURED TO POST 5 WITH A ⅝" x 4½" BUTTONHEAD BOLT. RUBRAIL IS FLARED TO BACK OF POST 6 AND NOT SECURED.
3) STEEL SPACER TUBE IS A SCHEDULE 40 GALVANIZED PIPE 6" INSIDE DIAMETER x 9" LONG. ATTACH TUBE TO GUARDRAIL ONLY WITH ⅝" x 1¼" LONG BUTTONHEAD BOLT AND RECTANGULAR PLATE WASHER.
4) SEE DETAIL D FOR SLOPED RUBRAIL BLOCKOUT. BLOCKOUT IS ATTACHED TO RAIL ELEMENT ONLY. USE ⅜" x 3" LAG BOLT WITH FLAT WASHER.
5) SHOP FABRICATE THE C6 x 8.2 RUBRAIL END TO BE CONSISTENT WITH THE SLOPE OF THE F SHAPE AND ATTACH FLUSH WITH THE SLOPED TOE OF THE BARRIER OR BRIDGE RAIL.
6) ANCHORAGE:
   (a) AT EXISTING BRIDGE RAIL AND NEW OR EXISTING BARRIERS, ANCHOR RUBRAIL USING THREE ⅝" x 6" CHEMICALLY ANCHORED BOLTS WITH WASHERS. MAXIMUM PROJECTION FOR BOLTS IS ½".
   (b) AT EXISTING BRIDGE RAIL AND NEW OR EXISTING BARRIERS, ANCHOR THE W-BEAM END SHOE USING A 4 BOLT HOLD DOWN PLATE (SEE STD. DWG. 862.04). A 4 BOLT INSERT ASSEMBLY IS ALLOWED ON PRECAST REINFORCED CONCRETE BARRIER (SEE STD. DWG. 857.01). INSTALL THE W-BEAM END SHOE BEHIND THE NESTED W-BEAM ELEMENTS.
   (c) AT NEW BRIDGE RAIL, ANCHOR THE W-BEAM END SHOE AND RUBRAIL AS DETAILED ON THE STRUCTURE PLANS.
7) POSTS 1 AND 2 ARE W8 x 13, 7'-6" LONG. ALL OTHER POSTS IN THE ANCHOR UNIT ARE W6 x 8.5.

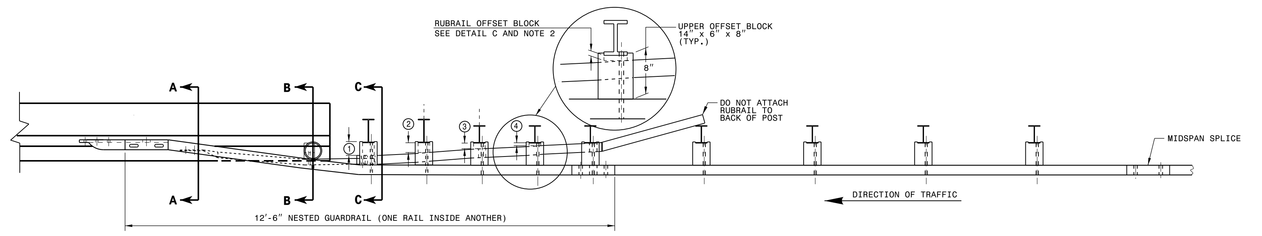

PLAN

GUARDRAIL ANCHOR UNIT TYPE B-77

SHEET 4 OF 7
862D03

STATE OF NORTH CAROLINA
DEPT. OF TRANSPORTATION
DIVISION OF HIGHWAYS
RALEIGH, N.C.

ROADWAY DETAIL DRAWING FOR
STRUCTURE ANCHOR UNIT
GUARDRAIL ANCHOR UNIT TYPE B-77
FOR F-SHAPE BARRIER

SHEET 4 OF 7
862D03

STATE OF NORTH CAROLINA
DEPT. OF TRANSPORTATION
DIVISION OF HIGHWAYS
RALEIGH, N.C.

ROADWAY DETAIL DRAWING FOR
STRUCTURE ANCHOR UNITS
GUARDRAIL ANCHOR UNIT, TYPE III

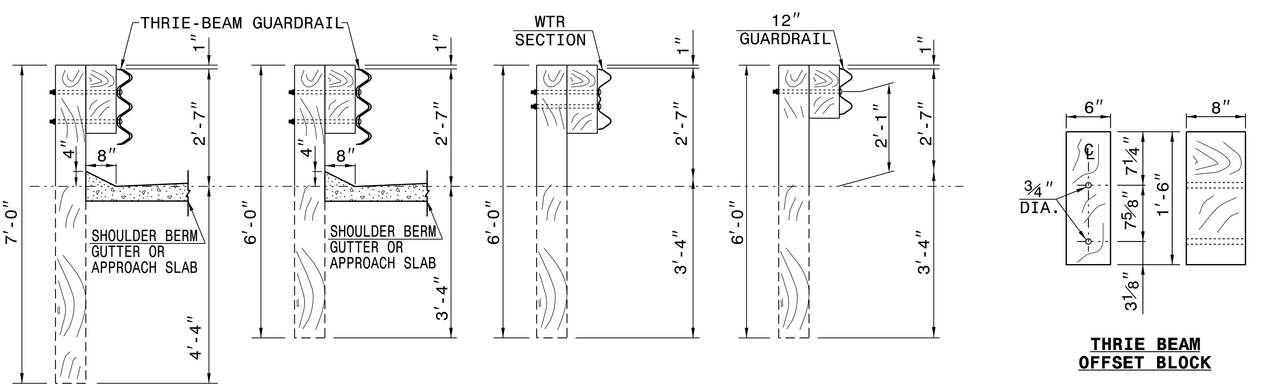

SECTION OF THRIE BEAM POSTS 1 THRU 6

SECTION OF THRIE BEAM POST 7

SECTION OF WTR BEAM POST 8

SECTION OF 'W' BEAM POST 9

THRIE BEAM OFFSET BLOCK

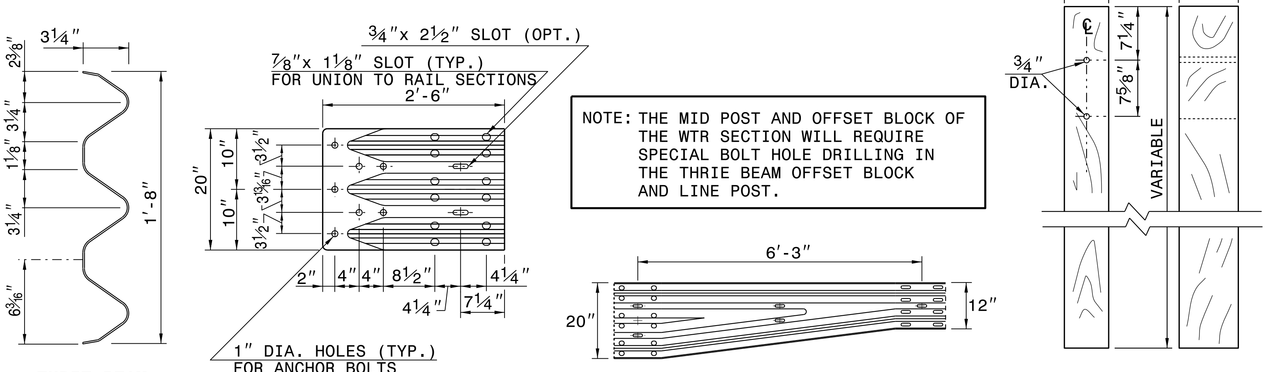

NOTE: THE MID POST AND OFFSET BLOCK OF THE WTR SECTION WILL REQUIRE SPECIAL BOLT HOLE DRILLING IN THE THRIE BEAM OFFSET BLOCK AND LINE POST.

THRIE-BEAM SECTION

END SHOE

WTR SECTION
ELEVATION VIEW

THRIE BEAM LINE POST

SHEET 3 OF 7
862D03

STATE OF NORTH CAROLINA
DEPT. OF TRANSPORTATION
DIVISION OF HIGHWAYS
RALEIGH, N.C.

ROADWAY DETAIL DRAWING FOR
STRUCTURE ANCHOR UNITS
GUARDRAIL ANCHOR UNIT, TYPE III

SHEET 3 OF 7
862D03

SEE TITLE BLOCK

ORIGINAL BY: J. HOWERTON DATE: 06-22-12
MODIFIED BY: DATE:
CHECKED BY: DATE:
FILE SPEC.:

CONTRACT STANDARDS AND DEVELOPMENT UNIT
Office 919-707-6950 FAX 919-250-4119

DOCUMENT NOT CONSIDERED FINAL UNLESS ALL SIGNATURES COMPLETED

NORTH CAROLINA PROFESSIONAL SEAL 022586 ENGINEER JAMES S. HOWERTON 6/2/2021

PROJECT REFERENCE NO. B-6001
SHEET NO. 2C-3

DocuSign Envelope ID: FE584E6F-C9DA-48A2-A14A-7A0A0AE30F04

COMPUTED BY: TAK	DATE: 1/3/19
CHECKED BY: ESM	DATE: 2/24/21

PROJECT NO.	SHEET NO.
B-6001	3B-1

STATE OF NORTH CAROLINA
DIVISION OF HIGHWAYS

SUMMARY OF EARTHWORK

Station	Station	Uncl. Excav.	Embank. +25%	Borrow	Waste
-L- STA. 11+50.00	-L- STA. 15+30.94	97	540	443	0
SUBTOTALS:					
-L- STA. 16+11.06	-L- STA. 18+23.00	118	265	148	0
SUBTOTALS:					
PROJECT TOTALS:		215	805	591	0
PROJECT TOTALS:		215	805	591	0
EST. 5% TO REPLACE TOP SOIL ON BORROW PIT				30	
GRAND TOTALS:		215	805	621	0
SAY:		250		650	

Note: Approximate quantities only. Unclassified Excavation, Borrow Excavation, Shoulder Borrow, Fine Grading, Clearing and Grubbing, Breaking of Existing Pavement, and Removal of Existing Pavement will be paid for at the contract lump sum price for grading.

Note: Earthwork quantities are calculated by the Roadway Design Unit. These earthwork quantities are based in part on subsurface data provided by the Geotechnical Engineering Unit.

SHOULDER BERM GUTTER SUMMARY

LINE	Station	Station	LENGTH
-L- LT	16+23	16+78	55
		TOTAL:	55
		SAY:	55

PAVEMENT REMOVAL SUMMARY

IN SQUARE YARDS

SURVEY LINE	Station	Station	LOCATION LT/RT/CL	ASPHALT REMOVAL	ASPHALT BREAKUP	CONCRETE REMOVAL	CONCRETE BREAKUP
-L-	13+75	13+92	CL	35.08			
-L-	16+11	17+25	RT	114.74			
-L-	13+92	15+31	CL		302.05		
-L-	16+11	16+22	CL		28.19		
		TOTAL:		149.82	330.24		
		SAY:		160	340		

DIVISION OF HIGHWAYS
STATE OF NORTH CAROLINA
GUARDRAIL SUMMARY

"N" = DISTANCE FROM EDGE OF LANE TO FACE OF GUARDRAIL
TOTAL SHOULDER WIDTH = DISTANCE FROM EDGE OF TRAVEL LANE TO SHOULDER BREAK POINT.
*FLARE LENGTH = DISTANCE FROM LAST SECTION OF PARALLEL GUARDRAIL TO END OF GUARDRAIL
W = TOTAL WIDTH OF FLARE FROM BEGINNING OF TAPER TO END OF GUARDRAIL

G = GATING IMPACT ATTENUATOR TYPE 350
NG = NON-GATING IMPACT ATTENUATOR TYPE 350

SURVEY LINE	BEG. STA.	END STA.	LOCATION	LENGTH			WARRANT POINT		"N" DIST. FROM E.O.L.	TOTAL SHOUL WIDTH	FLARE LENGTH		W		ANCHORS									IMPACT ATTENUATOR TYPE 350		SINGLE FACED CONCRETE BARRIER	REMOVE EXISTING GUARDRAIL	REMOVE & STOCKPILE EXISTING GUARDRAIL	REMARKS
				STRAIGHT	SHOP CURVED	DOUBLE FACED	APPROACH END	TRAILING END			APPROACH END	TRAILING END	APPROACH END	TRAILING END	Type III	B-77	GREU, TL-3	GREU, TL-2	CAT-1	AT-1	Type III SC	B-77 SC		G	NG				
-L-	14+55.94	15+30.94 (BRG)	RT	75			15+30.94 (BRG)		5.5	8.5	50		1		1		1												
-L-	14+55.94	15+30.50 (BRG)	LT	75				15+30.94 (BRG)	5.5	8.5		50		1	1		1												
-L-	16+11.06 (BRG)	17+29.81	RT	118.75				16+11.06 (BRG)	5.5	8.5		50		1	1		1												
-L-	16+11.06 (BRG)	17+29.81	LT	118.75			16+11.06 (BRG)		5.5	8.5	50		1		1		1												
SUBTOTALS:				387.50											4		4												
	ADDITIONAL GUARDRAIL POSTS=5 EA																												
	LESS ANCHOR DEDUCTIONS:																												
	TYPE III	4 @ 18.75 ft		75.00																									
	GREU, TL-3	4 @ 50 ft		200.00																									
	ANCHOR TOTALS:			275.00																									
	GUARDRAIL TOTALS:			112.50																									
	SAY:			112.50																									

DocuSign Envelope ID: FE584E6F-C9DA-48A2-A14A-7A0A0AE30F04

COMPUTED BY:	JR HOPSON, PE	DATE:	4/4/2019
CHECKED BY:	DP BOCKER, PE	DATE:	4/4/2019

NORTH CAROLINA DEPARTMENT OF TRANSPORTATION
DIVISION OF HIGHWAYS

PROJECT NO.	SHEET NO.
B-5606	3D-1

Note: Invert Elevations indicated are for Bid Purposes only and shall not be used for project construction stakeout.

LIST OF PIPES, ENDWALLS, ETC. (FOR PIPES 48 INCHES & UNDER)

STATION	LOCATION (LT, RT, OR CL)'	STRUCTURE NO. FROM	STRUCTURE NO. TO	TOP ELEVATION	INVERT ELEVATION	INVERT ELEVATION	SLOPE CRITICAL	SIDE DRAIN PIPE (RCP, CSP, CAAP, HDPE, or PVC) SIZE 12"	15"	18"	24"	30"	36"	42"	48"	DO NOT USE RCP	DO NOT USE CSP	DO NOT USE CAAP	DO NOT USE HDPE
THICKNESS OR GAUGE																			
13+40	CL	0400	0406		109.3	108.0													
16+45	LT	0401		112.3															
		0401	0402		109.5	109.3													
16+71	LT	0402		112.1															
	LT	0402	0403		109.3	109.3													
	RT	0405	0404		107.1	107.0													
	LT	0502	0501		107.3	107.3													
17+60	RT	0503							24										
SHEET TOTALS									24										

STATION	C.S. PIPE SIZE 12"	15"	18"	24"	30"	36"	42"	48"	R.C. PIPE CLASS III SIZE 12"	15"	18"	24"	30"	36"	42"	48"	R.C. PIPE CLASS IV SIZE 12"	15"	18"	24"	30"	36"	42"	48"
THICKNESS OR GAUGE	.064	.064	.064	.064	.079	.079	.109	.109																
13+40																			52					
16+45																								
																	24							
16+71																								
																	12							
																				8				
																				12				
17+60																								
SHEET TOTALS																	36		52	20				

STATION	18" R.C. PIPE (CLASS V)	***** RC PIPE CULVERTS, CONTRACTOR DESIGN	***** RC PIPE CULVERTS, CONTRACTOR DESIGN	15" SIDE DRAIN PIPE	18" SIDE DRAIN PIPE	ENDWALLS STD. 838.01 838.11 OR STD. 838.80 (UNLESS NOTED OTHERWISE) CU. YARDS R.C.P.	C.S.P.	QUANTITIES FOR DRAINAGE STRUCTURES PER EACH (0' THRU 5.0')	LIN. FT. 5.0' THRU 10.0' A	10.0' AND ABOVE B	*TOTAL LF. FOR PAY QUANTITY SHALL BE COL. 'A' + (1.3 X COL.'B')	C.B. STD. 840.01 OR STD. 840.02	FRAME, GRATES, AND HOOD STANDARD 840.03 TYPE OF GRATE E	F	G	CONCRETE TRANSITIONAL SECTION DROP INLET	CATCH BASIN	D.I. STD. 840.14 OR STD. 840.15	D.I. FRAME WITH TWO GRATES STD. 840.16	G.D.I. TYPE "A" STD. 840.17 OR 840.26	G.D.I. TYPE "B" STD. 840.18 OR 840.27	G.D.I. TYPE "D" STD. 840.19 OR 840.28	T.B.D.I. STD. 840.35	G.D.I. FRAME WITH TWO GRATES STD. 840.22	G.D.I. (N.S.) FRAME WITH GRATE STD. 840.24	G.D.I. FRAME WITH TWO GRATES STD. 840.29	J.B. STD. 840.31 OR 840.32	SIDE DRAIN PIPE ELBOWS NO. & SIZE	CONC. & BRICK PIPE PLUG, C.Y. STD. 840.71	CONC. COLLARS CL. "B" C.Y. STD. 840.72	PIPE REMOVAL LIN. FT.	REMARKS
13+40																							41	
16+45								1									1		1					
16+71								1									1		1					
																					0.5526			RETAIN & EXTEND
																					0.5526			RETAIN & EXTEND
17+60																							14	
SHEET TOTALS								2									2		2		1.1052		55	

ABBREVIATIONS

C.B.	CATCH BASIN
N.D.I.	NARROW DROP INLET
D.I.	DROP INLET
G.D.I.	GRATED DROP INLET
G.D.I.(N.S.)	(NARROW SLOT)
J.B.	JUNCTION BOX
M.H.	MANHOLE
T.B.D.I.	TRAFFIC BEARING DROP INLET
T.B.J.B.	TRAFFIC BEARING JUNCTION BOX

DocuSign Envelope ID: FE584E6F-C9DA-48A2-A14A-7A0A0AE30F04

8/17/99

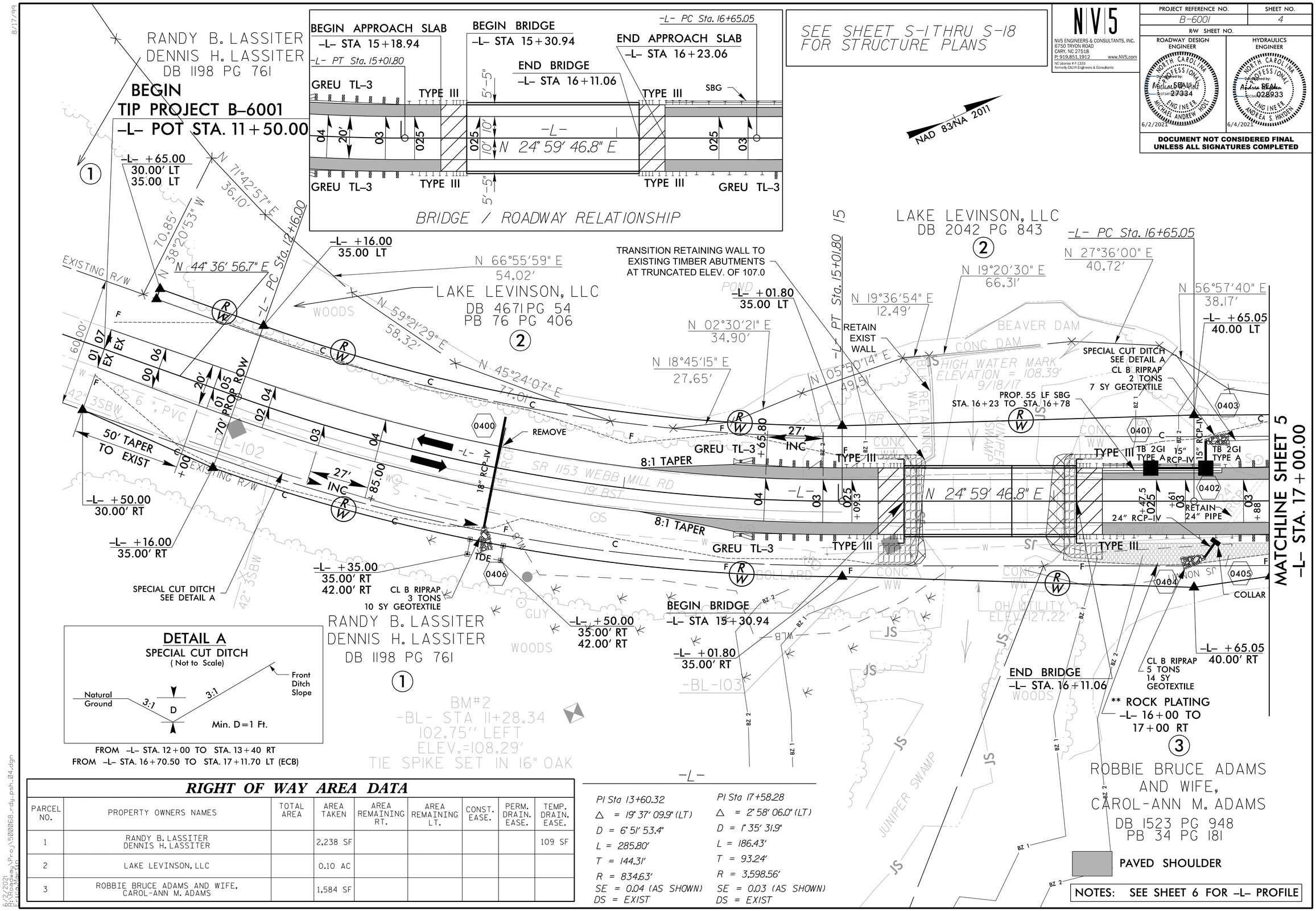

RIGHT OF WAY AREA DATA

PARCEL NO.	PROPERTY OWNERS NAMES	TOTAL AREA	AREA TAKEN	AREA REMAINING RT.	AREA REMAINING LT.	CONST. EASE.	PERM. DRAIN. EASE.	TEMP. DRAIN. EASE.
1	RANDY B. LASSITER DENNIS H. LASSITER		2,238 SF					109 SF
2	LAKE LEVINSON, LLC		0.10 AC					
3	ROBBIE BRUCE ADAMS AND WIFE, CAROL-ANN M. ADAMS		1,584 SF					

6/2/2021
R:\Roadway\Proj\5000068_rdy_psh_04.dgn

DocuSign Envelope ID: FE584E6F-C9DA-48A2-A14A-7A0A0AE30F04

8/17/99

PROJECT REFERENCE NO.	SHEET NO.
B-6001	5
R/W SHEET NO.	

NV5 ENGINEERS & CONSULTANTS, INC.
6750 TRYON ROAD
CARY, NC 27518
P: 919.851.1912 www.NV5.com
NC License # F-1333
formerly CALYX Engineers & Consultants

ROADWAY DESIGN ENGINEER: NORTH CAROLINA PROFESSIONAL SEAL 27334 ENGINEER MICHAEL ANDREW HOLT — Digitally signed by: Michael Holt — 6/2/2021

HYDRAULICS ENGINEER: NORTH CAROLINA PROFESSIONAL SEAL 028933 ENGINEER ANDREA S. HAYDEN — Digitally signed by: Andrea Hayden — 6/4/2021

DOCUMENT NOT CONSIDERED FINAL UNLESS ALL SIGNATURES COMPLETED

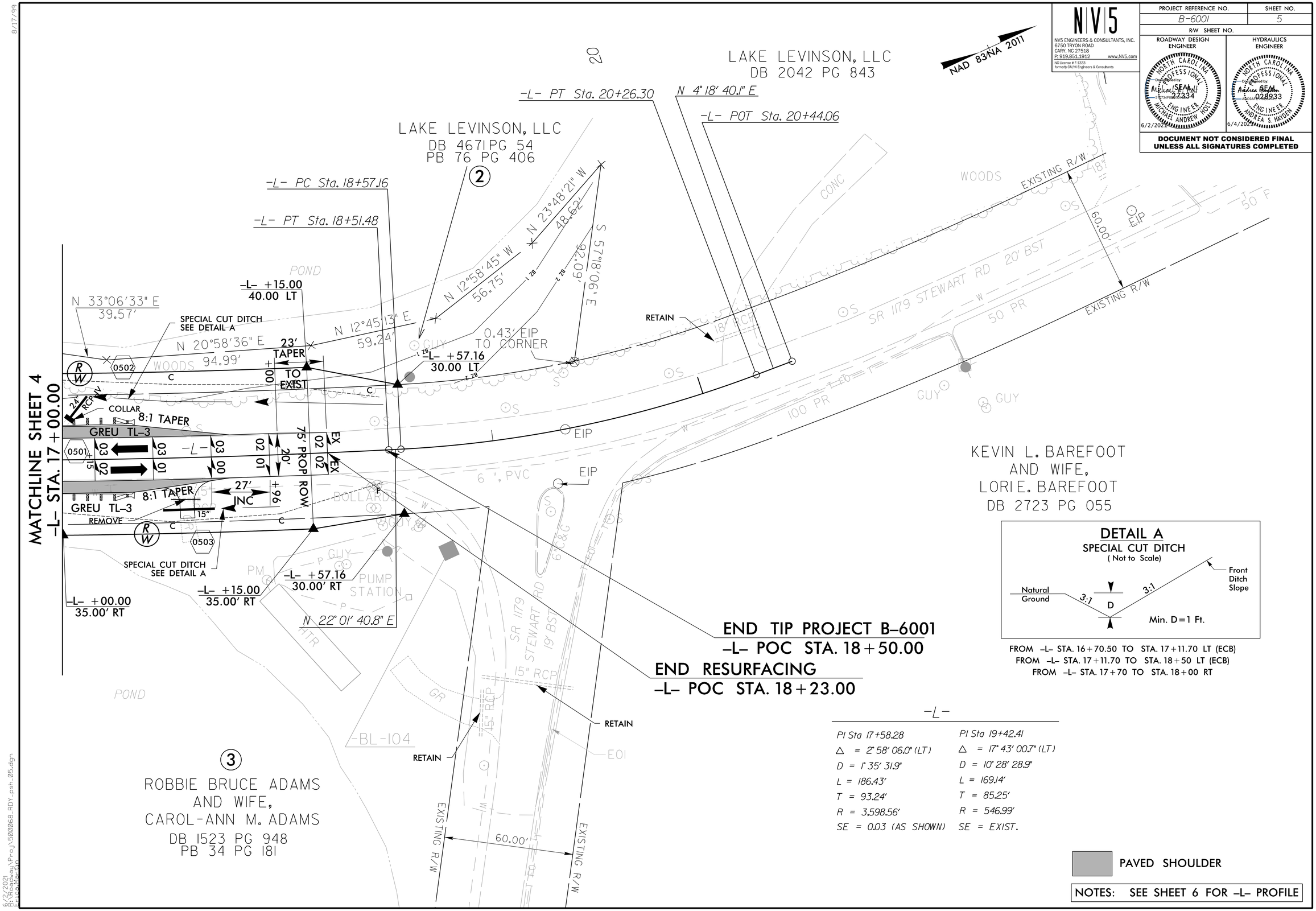

6/2/2021
R:\Roadway\Proj\5000068_RDY_psh_05.dgn
Erica.Hayden

DocuSign Envelope ID: FE584E6F-C9DA-48A2-A14A-7A0A0AE30F04

5/28/99

NV5 ENGINEERS & CONSULTANTS, INC.
6750 TRYON ROAD
CARY, NC 27518
P: 919.851.1912 www.NV5.com
NC License # F-1333
formerly CALYX Engineers & Consultants

PROJECT REFERENCE NO.	SHEET NO.
B-6001	6

ROADWAY DESIGN ENGINEER
Digitally signed by: Michael Hoit
Approved by: 27384
6/2/2021

HYDRAULICS ENGINEER
Digitally signed by: Andrea Hayden
Approved by: 028933
6/4/2021

DOCUMENT NOT CONSIDERED FINAL UNLESS ALL SIGNATURES COMPLETED

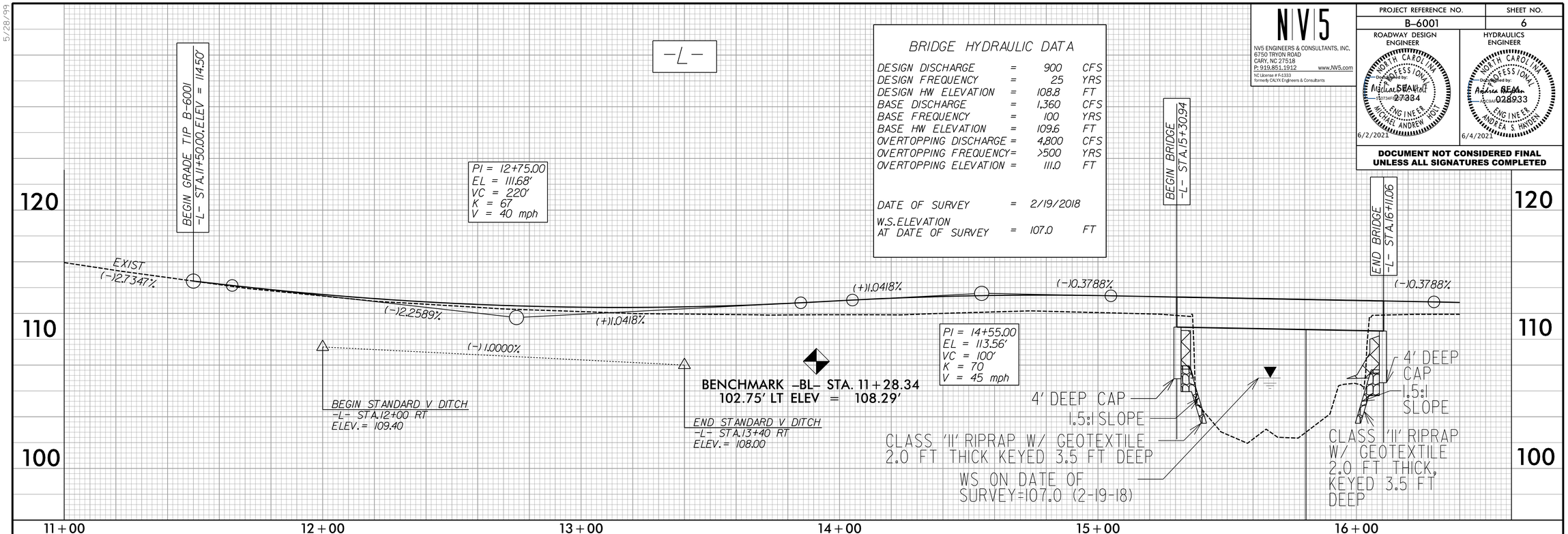

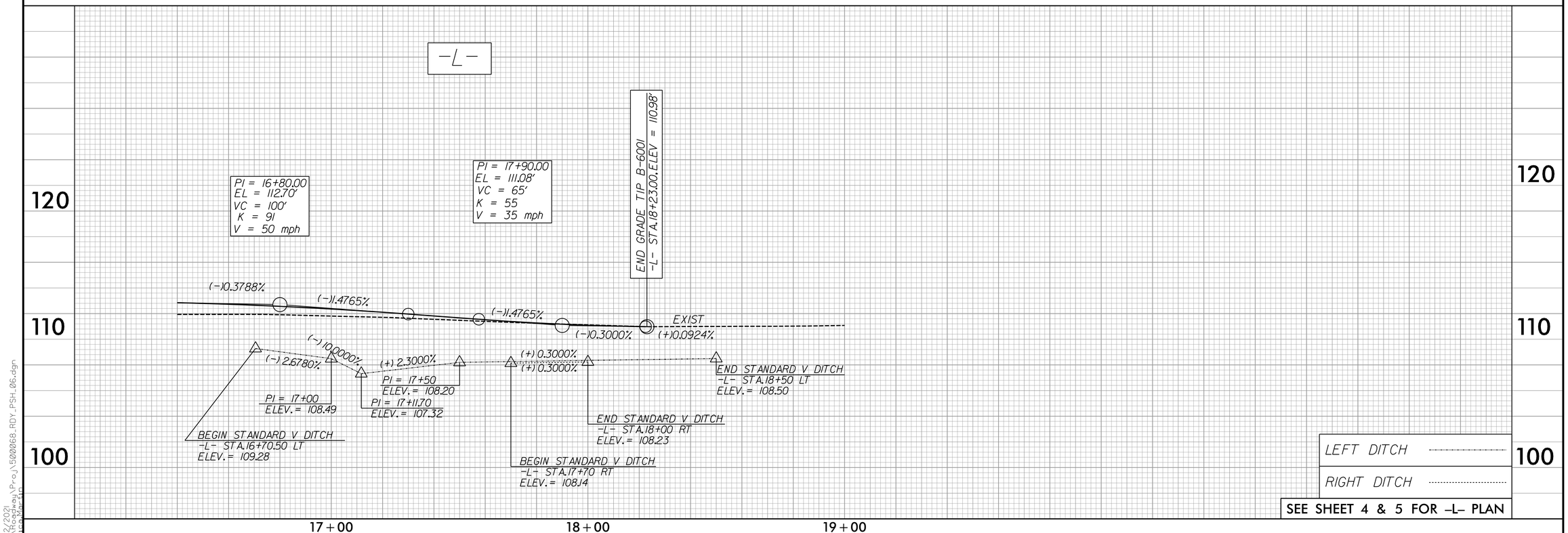

SEE SHEET 4 & 5 FOR -L- PLAN

6/3/2021
R:\Roadway\Proj\5000068_RDY_PSH_06.dgn

DocuSign Envelope ID: FE584E6F-C9DA-48A2-A14A-7A0A0AE30F04

PROJ. REFERENCE NO.	SHEET NO.
B-6001	TMP-1

ROADWAY STANDARD DRAWINGS

THE FOLLOWING ROADWAY STANDARDS AS SHOWN IN "ROADWAY STANDARD DRAWINGS" – N.C. DEPARTMENT OF TRANSPORTATION – RALEIGH, N.C., DATED JANUARY 2018 ARE APPLICABLE TO THIS PROJECT AND BY REFERENCE HEREBY ARE CONSIDERED A PART OF THESE PLANS:

STD. NO.	TITLE
1101.03	TEMPORARY ROAD CLOSURES
1110.01	STATIONARY WORK ZONE SIGNS
1145.01	BARRICADES
1205.01	PAVEMENT MARKINGS – LINE TYPES AND OFFSETS
1205.02	PAVEMENT MARKINGS – TWO LANE AND MULTILANE ROADWAYS
1205.12	PAVEMENT MARKINGS – BRIDGES
1261.01	GUARDRAIL AND BARRIER DELINEATORS – INSTALLATION SPACING
1261.02	GUARDRAIL AND BARRIER DELINEATORS – TYPES AND MOUNTING
1262.01	GUARDRAIL END DELINEATION

PHASING

STEP 1: USING ROADWAY STANDARD DRAWING NO. 1101.03, SHEET 1 OF 9, AND SHEET TMP-2, PERFORM THE FOLLOWING:
–INSTALL ALL ROAD CLOSURE AND DETOUR SIGNING INCLUDING BARRICADES
– CLOSE SR 1153 (WEBB MILL ROAD)
– PLACE TRAFFIC ONTO OFF-SITE DETOUR

STEP 2: REMOVE EXISTING BRIDGE #68 AND CONSTRUCT THE PROPOSED BRIDGE AND APPROACHES AS SHOWN IN THE CONSTRUCTION PLANS.

STEP 3: INSTALL FINAL PAVEMENT MARKINGS.

STEP 4: REMOVE ALL TRAFFIC CONTROL SIGNING AND DEVICES AND RE-OPEN SR 1153 (WEBB MILL ROAD) TO THE FINAL TRAFFIC PATTERN.

LEGEND

GENERAL

- DIRECTION OF TRAFFIC FLOW
- DIRECTION OF PEDESTRIAN TRAFFIC FLOW
- EXIST. PVMT.
- NORTH ARROW
- PROPOSED PVMT.
- TEMP. SHORING (LOCATION PURPOSES ONLY)
- WORK AREA
- REMOVAL
- USER DEFINED (IF NEEDED)
- USER DEFINED (IF NEEDED)

SIGNALS

- EXISTING
- PROPOSED
- TEMPORARY

PAVEMENT MARKINGS

- EXISTING LINES
- TEMPORARY LINES

TRAFFIC CONTROL DEVICES

- BARRICADE (TYPE III)
- CONE
- DRUM
- SKINNY DRUM
- TUBULAR MARKER
- TEMPORARY CRASH CUSHION
- FLASHING ARROW BOARD
- FLAGGER
- LAW ENFORCEMENT
- TRUCK MOUNTED ATTENUATOR (TMA)
- CHANGEABLE MESSAGE SIGN

TEMPORARY SIGNING

- PORTABLE SIGN
- STATIONARY SIGN
- STATIONARY OR PORTABLE SIGN

PAVEMENT MARKERS

- CRYSTAL/CRYSTAL
- CRYSTAL/RED
- YELLOW/YELLOW

PAVEMENT MARKING SYMBOLS

- PAVEMENT MARKING SYMBOLS

GENERAL NOTES

CHANGES MAY BE REQUIRED WHEN PHYSICAL DIMENSIONS IN THE DETAIL DRAWINGS, STANDARD DETAILS, AND ROADWAY DETAILS ARE NOT ATTAINABLE TO MEET FIELD CONDITIONS OR RESULT IN DUPLICATE OR UNDESIRED OVERLAPPING OF DEVICES. MODIFICATION MAY INCLUDE: MOVING, SUPPLEMENTING, COVERING, OR REMOVAL OF DEVICES AS DIRECTED BY THE ENGINEER.

THE FOLLOWING GENERAL NOTES APPLY AT ALL TIMES FOR THE DURATION OF THE CONSTRUCTION PROJECT EXCEPT WHEN OTHERWISE NOTED IN THE PLAN OR DIRECTED BY THE ENGINEER.

TRAFFIC PATTERN ALTERATIONS

A) NOTIFY THE ENGINEER THIRTY (30) CALENDAR DAYS PRIOR TO ANY TRAFFIC PATTERN ALTERATION.

SIGNING

B) PROVIDE SIGNING AND DEVICES REQUIRED TO CLOSE THE ROAD ACCORDING TO THE ROADWAY STANDARD DRAWINGS AND TRAFFIC CONTROL PLANS. PROVIDE SIGNING REQUIRED FOR THE OFF-SITE DETOUR ROUTE AS SHOWN IN THE TRAFFIC CONTROL PLANS.

C) COVER OR REMOVE ALL SIGNS AND DEVICES REQUIRED TO CLOSE THE ROAD WHEN ROAD CLOSURE IS NOT IN OPERATION.

COVER OR REMOVE ALL SIGNS REQUIRED FOR THE OFF-SITE DETOUR WHEN THE DETOUR IS NOT IN OPERATION.

D) ENSURE ALL NECESSARY SIGNING IS IN PLACE PRIOR TO ALTERING ANY TRAFFIC PATTERN.

TRAFFIC CONTROL DEVICES

E) PLACE TYPE III BARRICADES, WITH "ROAD CLOSED" SIGN R11-2 ATTACHED, OF SUFFICIENT LENGTH TO CLOSE ENTIRE ROADWAY.

PAVEMENT MARKINGS AND MARKERS

F) INSTALL PAVEMENT MARKINGS ON THE FINAL SURFACE AS FOLLOWS:

ROAD NAME	MARKING	MARKER
SR 1153	HOT SPRAY THERMOPLASTIC – 2800 L.F.	NONE

G) TIE PROPOSED PAVEMENT MARKING LINES TO EXISTING PAVEMENT MARKING LINES.

H) REMOVE/REPLACE ANY CONFLICTING/DAMAGED PAVEMENT MARKINGS AND MARKERS BY THE END OF EACH DAY'S OPERATION.

I) PASSING ZONE WILL BE DETERMINED IN THE FIELD AND MUST BE APPROVED BY THE ENGINEER.

INCOMPLETE PLANS
DO NOT USE FOR CONSTRUCTION

APPROVED: _____

DATE: _____

SEAL

6/9/2021

NORTH CAROLINA PROFESSIONAL ENGINEER SEAL 036661 KEVIN AUSTIN

DocuSigned by: K. Kevin Austin 72F7B72D0C0D4E1...

DOCUMENT NOT CONSIDERED FINAL UNLESS ALL SIGNATURES COMPLETED

NV5 ENGINEERS & CONSULTANTS, INC.
6750 TRYON ROAD
CARY, NC 27518
P: 919.851.1912 www.NV5.com
NC License # F-1333
formerly CALYX Engineers & Consultants

ROADWAY STANDARD DRAWINGS & LEGEND

6/9/2021
R:\Traffic\TrafficControl\TCP\B6001_TMP_500068.dgn
11:59:02 AM

DocuSign Envelope ID: FE584E6F-C9DA-48A2-A14A-7A0A0AE30F04

PROJ. REFERENCE NO.	SHEET NO.
B-6001	TMP-2

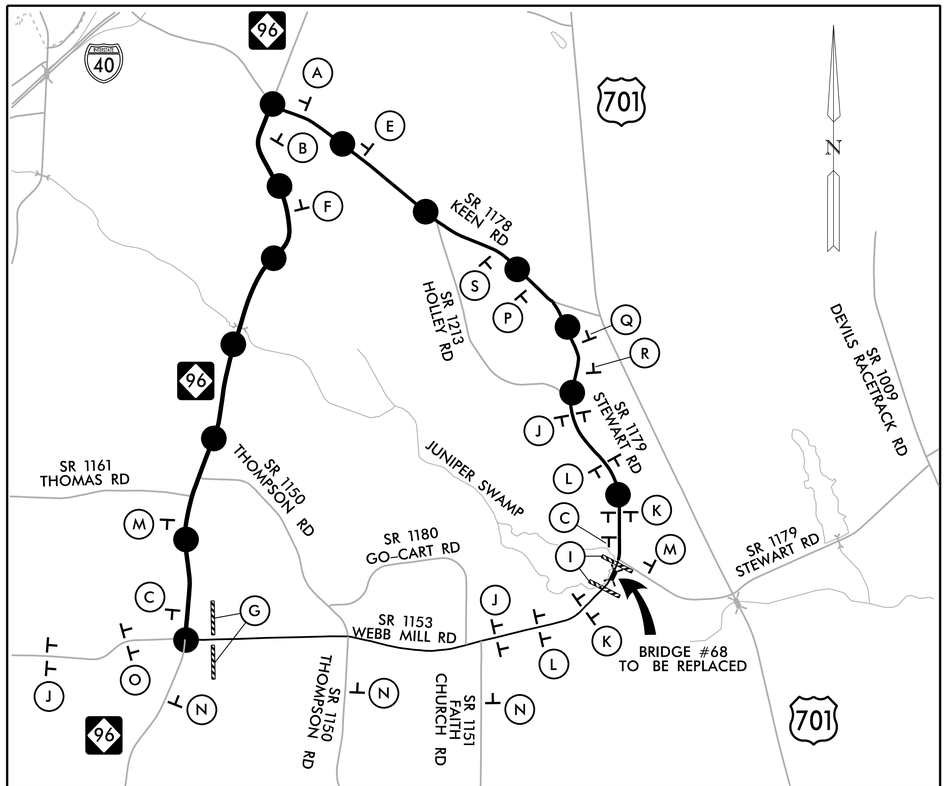

DETOUR ROUTE (APPROXIMATE LENGTH = 7 MILES)

✱ SEE SHEET SD-1 FOR SPECIAL SIGN DESIGN

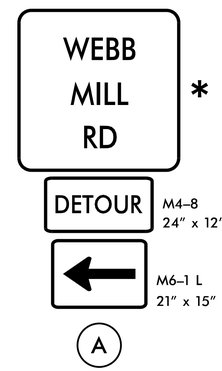

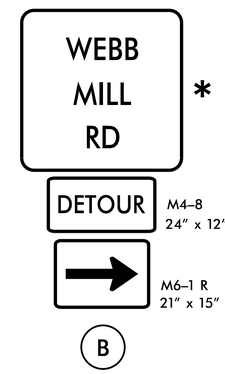

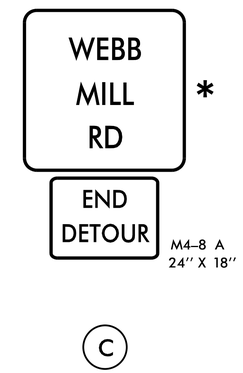

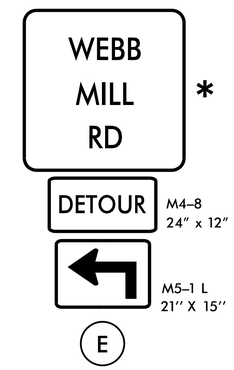

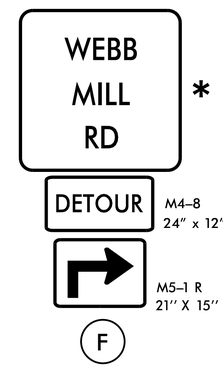

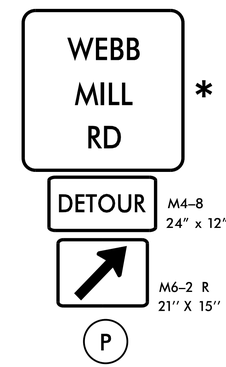

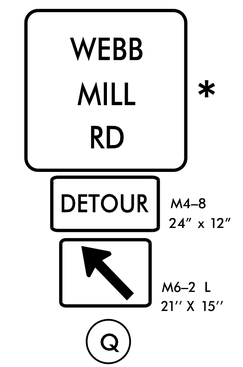

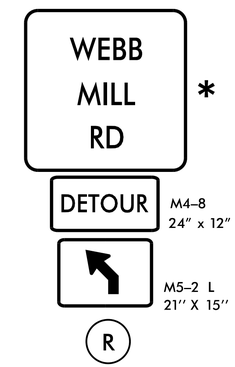

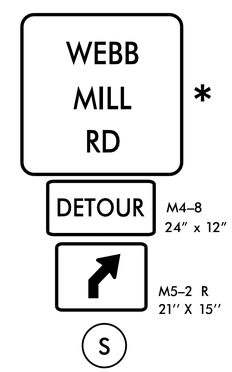

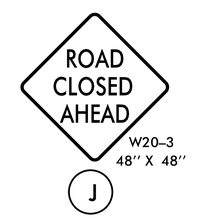

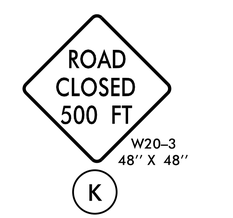

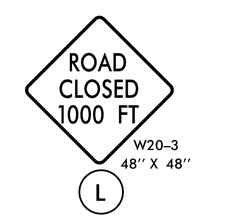

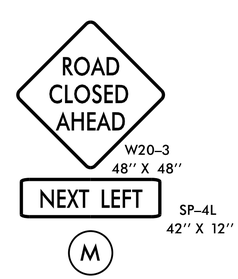

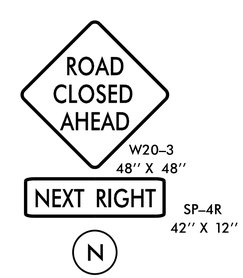

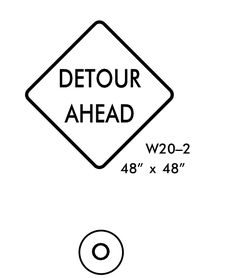

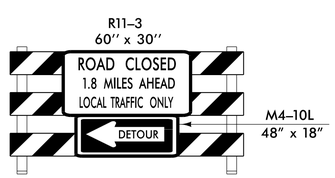

TYPE III BARRICADE

G

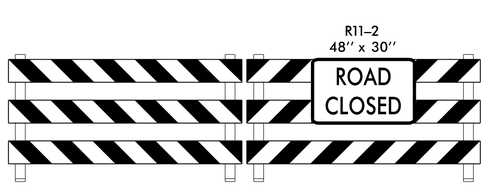

TYPE III BARRICADE(S)

I

APPROVED: _____

DATE: _____

SEAL

6/2/2021

NORTH CAROLINA PROFESSIONAL SEAL 019661 ENGINEER KEVIN AUSTIN

Digitally signed by: L. Kevin Austin
72F7B372EEAA8BE

DOCUMENT NOT CONSIDERED FINAL UNLESS ALL SIGNATURES COMPLETED

NV5 ENGINEERS & CONSULTANTS, INC.
6750 TRYON ROAD
CARY, NC 27518
P: 919.851.1912 www.NV5.com
NC License # F-1333
formerly CALYX Engineers & Consultants

TRAFFIC MANAGEMENT PLAN

4/26/2021
R:\Traffic\TrafficControl\TCP\B6001_TMP_500068.dgn
10:29:48 AM

DocuSign Envelope ID: FE584E6F-C9DA-48A2-A14A-7A0A0AE30F04

PROJ. REFERENCE NO.	SHEET NO.
B-6001	SD-1

SIGN DETAIL

1:20

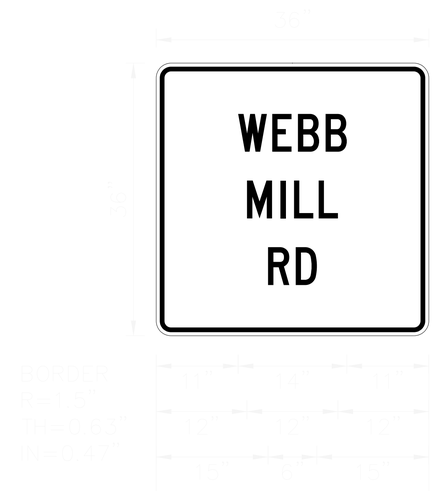

SIGN NUMBER	name	
WIDTH x HGHT.	3'-0" x 3'-0"	
BORDER WIDTH	0.63"	
CORNER RADIUS	1.5"	
MOUNTING	Ground	
BACKGROUND	TYPE:	Reflective
	COLOR:	Orange
LEGEND/BORDER	TYPE:	Non-reflective
	COLOR:	Black/Black

SYMBOL	ROT	X	Y	WID	HT

Panel Style: construction_guide.ssi

Dimensions are in inches.tenths

Letter locations are panel edge to lower left corner

LETTER POSITIONS (X)																					LENGTH	SERIES/SIZE
W	E	B	B																			C 2000
10.8	15.3	18.7	22.4																		14.4	5
M	I	L	L																			C 2000
12	16.4	18.2	21.5																		12	5
R	D																					C 2000
14.8	18.4																				6.5	5

APPROVED: _____

DATE: _____

SEAL

6/2/2021

NORTH CAROLINA PROFESSIONAL SEAL 045103 ENGINEER VICTORIA GUONNITS

Digitally signed by: Victoria Guonnits
DN: cn=Victoria Guonnits, o=NV5 Engineers & Consultants, ou=Engineering, c=US
Date: 2021.06.02 12:30:00 -04'00'

DOCUMENT NOT CONSIDERED FINAL UNLESS ALL SIGNATURES COMPLETED

NV5 ENGINEERS & CONSULTANTS, INC.
6750 TRYON ROAD
CARY, NC 27518
P: 919.851.1912 www.NV5.com
NC License # F-1333
formerly CALYX Engineers & Consultants

SPECIAL SIGN DESIGN

$$$$$$SYSTIME$$$$$$
$$$$$$$$$$DGN$$$$$$$$$$
$$$USERNAME$$$

DocuSign Envelope ID: FE584E6F-C9DA-48A2-A14A-7A0A0AE30F04

PROJECT: B-6001

TIP

STATE OF NORTH CAROLINA
DIVISION OF HIGHWAYS

NAD 83/2011

STATE	STATE PROJECT REFERENCE NO.	SHEET NO.	TOTAL SHEETS
N.C.	B-6001	EC-1	EC-10

STATE PROJ. NO.	F.A. PROJ. NO.	DESCRIPTION
17.BP.4.R.99	BRZ-1153(009)	PE

PLAN FOR PROPOSED HIGHWAY EROSION CONTROL

JOHNSTON COUNTY

THIS PROJECT HAS BEEN DESIGNED TO SENSITIVE WATERSHED STANDARDS.

THIS PROJECT CONTAINS EROSION CONTROL PLANS FOR CLEARING AND GRUBBING PHASE OF CONSTRUCTION.

ENVIRONMENTALLY SENSITIVE AREA(S) EXIST ON THIS PROJECT

Refer To E. C. Special Provisions for Special Considerations.

LOCATION: REPLACE BRIDGE NO. 68 ON SR 1153 (WEBB MILL RD) OVER JUNIPER SWAMP

TYPE OF WORK: GRADING, DRAINAGE, PAVING, AND STRUCTURE

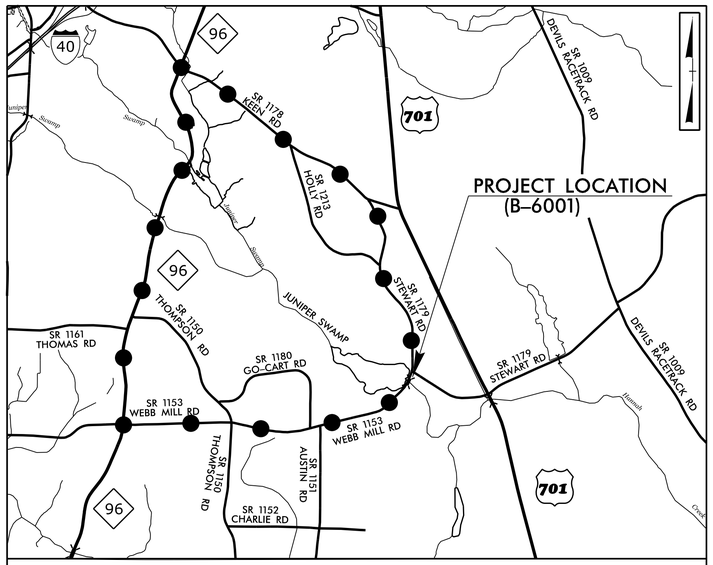

VICINITY MAP
(NOT TO SCALE)

DETOUR ROUTE (APPROXIMATE LENGTH = 7 MILES)

EROSION AND SEDIMENT CONTROL MEASURES

Std. #	Description	Symbol
1630.03	Temporary Silt Ditch	TSD
1630.05	Temporary Diversion	TD
1605.01	Temporary Silt Fence	
1606.01	Special Sediment Control Fence	
1622.01	Temporary Berms and Slope Drains	
1630.02	Silt Basin Type B	
1633.01	Temporary Rock Silt Check Type-A	
	Temporary Rock Silt Check Type-A with Matting and Polyacrylamide (PAM)	
1633.02	Temporary Rock Silt Check Type-B	
	Wattle Coir Fiber Wattle	EW CFW
	Wattle Coir Fiber Wattle with Polyacrylamide (PAM)	
1634.01	Temporary Rock Sediment Dam Type-A	
1634.02	Temporary Rock Sediment Dam Type-B	
1635.01	Rock Pipe Inlet Sediment Trap Type-A	
1635.02	Rock Pipe Inlet Sediment Trap Type-B	
1630.04	Stilling Basin	
1630.06	Special Stilling Basin	
	Rock Inlet Sediment Trap:	
1632.01	Type A	A
1632.02	Type B	B
1632.03	Type C	C
	Skimmer Basin	
	Tiered Skimmer Basin	
	Infiltration Basin	

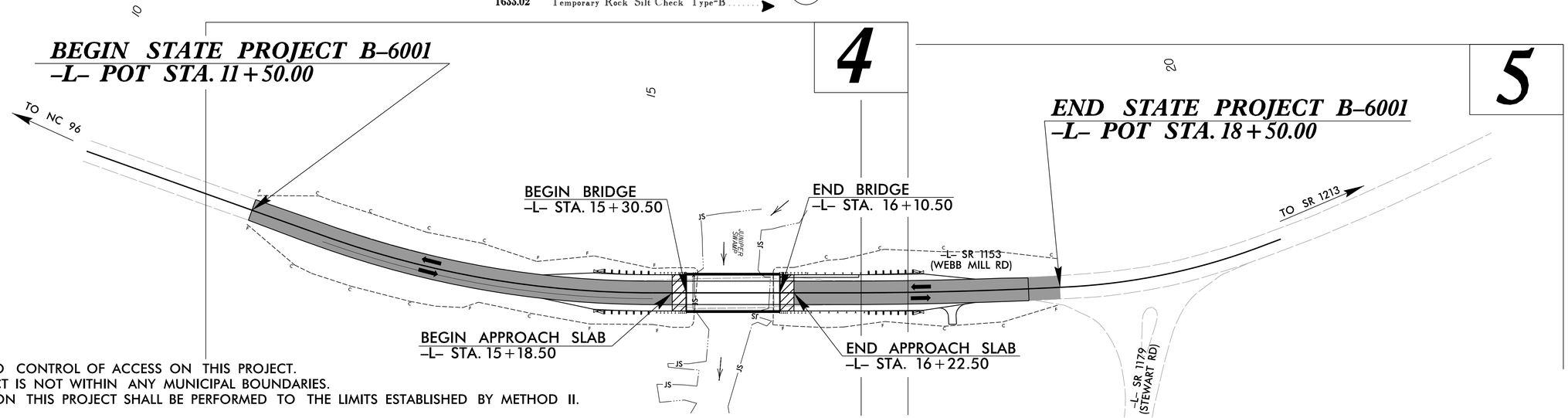

THERE IS NO CONTROL OF ACCESS ON THIS PROJECT.
THIS PROJECT IS NOT WITHIN ANY MUNICIPAL BOUNDARIES.
CLEARING ON THIS PROJECT SHALL BE PERFORMED TO THE LIMITS ESTABLISHED BY METHOD II.

GRAPHIC SCALE

50 25 0 50 100
PLANS

THESE EROSION AND SEDIMENT CONTROL PLANS COMPLY WITH THE APPLICABLE REGULATIONS SET FORTH BY THE NCG-010000 GENERAL CONSTRUCTION PERMIT EFFECTIVE APRIL 1, 2019 AND ISSUED BY THE NORTH CAROLINA DEPARTMENT OF ENVIRONMENTAL QUALITY DIVISION OF WATER RESOURCES.

NV5 ENGINEERS & CONSULTANTS, INC.
3300 REGENCY PARKWAY, SUITE 100
CARY, NC 27518
P: 919.851.1912 www.NV5.com
NC License # F-1333

Prepared in the Office of:

NV5 ENGINEERS & CONSULTANTS
3300 REGENCY PARKWAY, SUITE 100
CARY, NC 27518

Designed by:

WILL J. WEATHERSBEE, PE ***3161***
NAME *LEVEL III CERTIFICATION NO.*

Roadway Standard Drawings

The following roadway english standards as appear in "Roadway Standard Drawings"- Roadway Design Unit - N. C. Department of Transportation - Raleigh, N. C., dated January 2018 and the latest revison thereto are applicable to this project and by reference hereby are considered a part of these plans.

1604.01	Railroad Erosion Control Detail	1632.01	Rock Inlet Sediment Trap Type A
1605.01	Temporary Silt Fence	1632.02	Rock Inlet Sediment Trap Type B
1606.01	Special Sediment Control Fence	1632.03	Rock Inlet Sediment Trap Type C
1607.01	Gravel Construction Entrance	1633.01	Temporary Rock Silt Check Type A
1622.01	Temporary Berms and Slope Drains	1633.02	Temporary Rock Silt Check Type B
1630.01	Riser Basin	1634.01	Temporary Rock Sediment Dam Type A
1630.02	Silt Basin Type B	1634.02	Temporary Rock Sediment Dam Type B
1630.03	Temporary Silt Ditch	1635.01	Rock Pipe Inlet Sediment Trap Type A
1630.04	Stilling Basin	1635.02	Rock Pipe Inlet Sediment Trap Type B
1630.05	Temporary Diversion	1640.01	Coir Fiber Baffle
1630.06	Special Stilling Basin	1645.01	Temporary Stream Crossing
1631.01	Matting Installation		

5/28/2021
R:\Environmental\Design\50006B_HYD_EC_TSH.dgn
mstubblefield

DocuSign Envelope ID: FE584E6F-C9DA-48A2-A14A-7A0A0AE30F04

PROJECT REFERENCE NO.	SHEET NO.
B-6001	EC-2

COIR FIBER WATTLE WITH POLYACRYLAMIDE (PAM) DETAIL

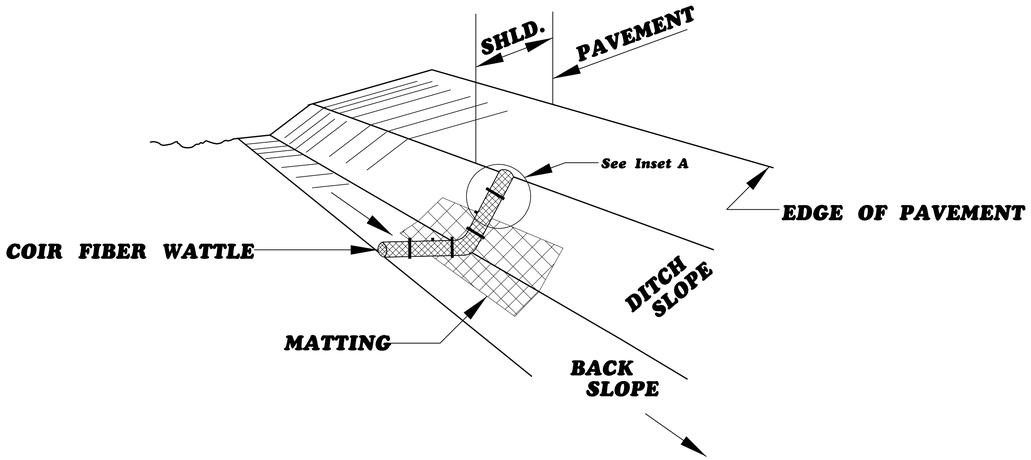

ISOMETRIC VIEW

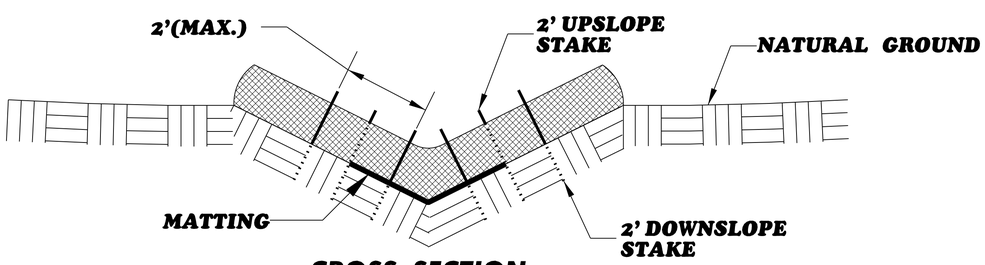

CROSS SECTION
VEE DITCH

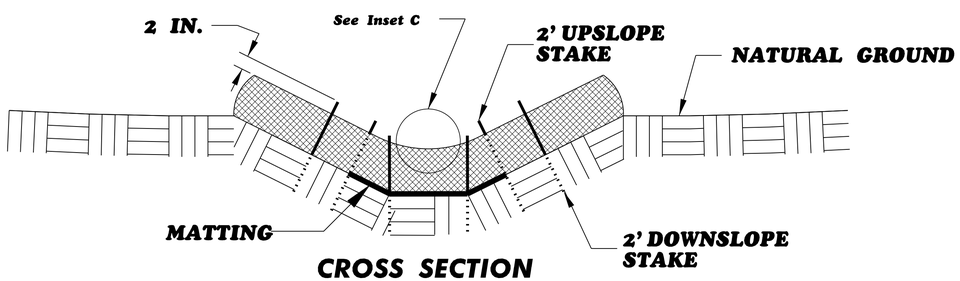

CROSS SECTION
TRAPEZOIDAL DITCH

NOTES:

USE MINIMUM 12 IN. DIAMETER COIR FIBER (COCONUT FIBER) WATTLE.

USE 2 FT. WOODEN STAKES WITH A 2 IN. BY 2 IN. NOMINAL CROSS SECTION.

ONLY INSTALL WATTLE(S) TO A HEIGHT IN DITCH SO FLOW WILL NOT WASH AROUND WATTLE AND SCOUR DITCH SLOPES AND AS DIRECTED.

INSTALL A MINIMUM OF 2 UPSLOPE STAKES AND 4 DOWNSLOPE STAKES AT AN ANGLE TO WEDGE WATTLE TO BOTTOM OF DITCH.

PROVIDE STAPLES MADE OF 0.125 IN. DIAMETER STEEL WIRE FORMED INTO A U SHAPE NOT LESS THAN 12" IN LENGTH.

INSTALL STAPLES APPROXIMATELY EVERY 1 LINEAR FOOT ON BOTH SIDES OF WATTLE AND AT EACH END TO SECURE IT TO THE SOIL.

INSTALL MATTING IN ACCORDANCE WITH SECTION 1631 OF THE STANDARD SPECIFICATIONS.

PRIOR TO POLYACRYLAMIDE (PAM) APPLICATION, OBTAIN A SOIL SAMPLE FROM PROJECT LOCATION, AND FROM OFFSITE MATERIAL, AND ANALYZE FOR APPROPRIATE PAM FLOCCULANT TO BE APPLIED TO EACH WATTLE.

INITIALLY APPLY 2 OUNCES OF ANIONIC OR NEUTRALLY CHARGED PAM OVER WATTLE WHERE WATER WILL FLOW AND 1 OUNCE OF PAM ON MATTING ON EACH SIDE OF WATTLE. REAPPLY PAM AFTER EVERY RAINFALL EVENT THAT IS EQUAL TO OR EXCEEDS 0.50 IN.

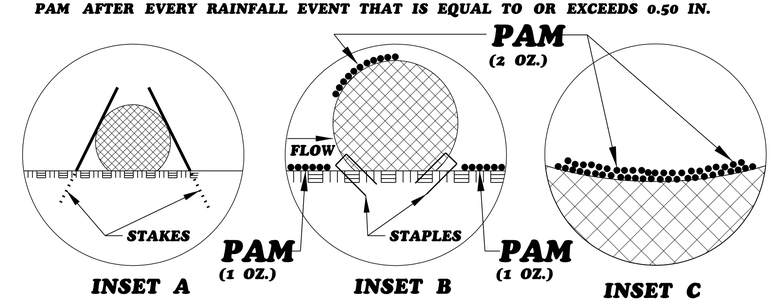

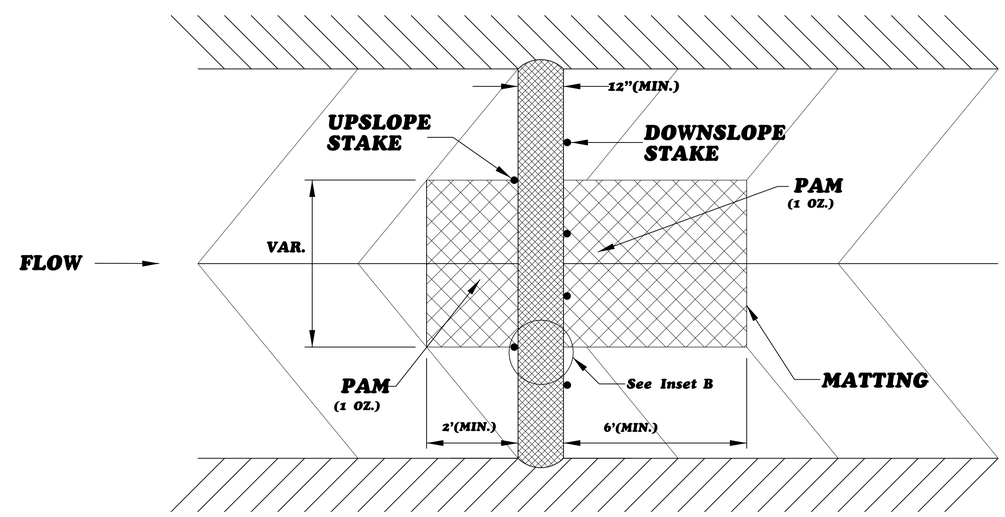

TOP VIEW

8/17/99
5/28/2021
R:\Environmental\Design\5000068_HYD_EC_PSH_02.dgn
christianphind

DocuSign Envelope ID: FE584E6F-C9DA-48A2-A14A-7A0A0AE30F04

PROJECT REFERENCE NO.	SHEET NO.
B-6001	EC-2A

TEMPORARY ROCK SILT CHECK TYPE 'A' WITH EXCELSIOR MATTING AND POLYACRYLAMIDE (PAM)

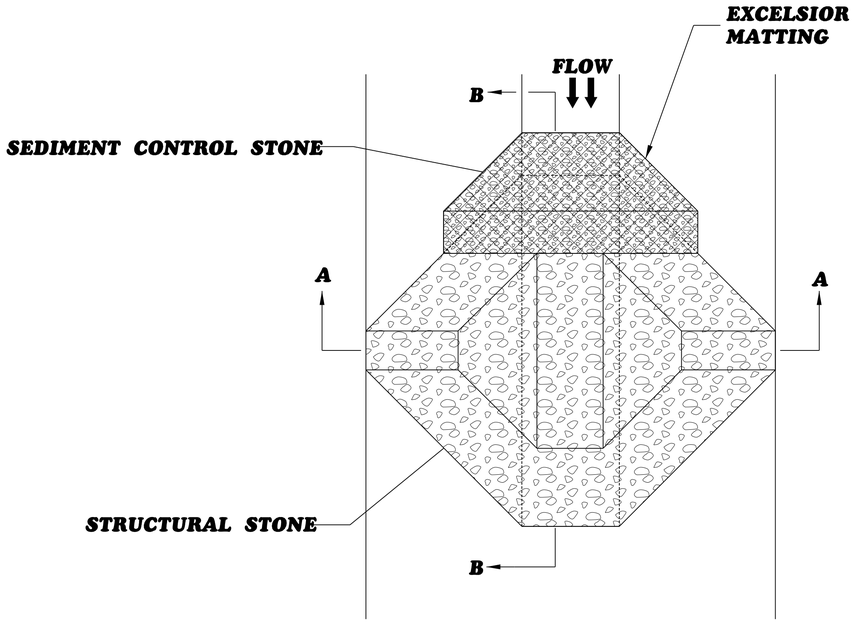

PLAN

NOTES:

INSTALL TEMPORARY ROCK SILT CHECK TYPE A IN ACCORDANCE WITH ROADWAY STANDARD DRAWING NO. 1633.01.

USE EXCELSIOR FOR MATTING MATERIAL AND ANCHOR MATTING SECTION AT TOP AND BOTTOM WITH CLASS B STONE.

PRIOR TO POLYACRYLAMIDE (PAM) APPLICATION, OBTAIN A SOIL SAMPLE FROM PROJECT LOCATION, AND FROM OFFSITE MATERIAL, AND ANALYZE FOR APPROPRIATE PAM FLOCCULANT TO BE APPLIED TO EACH ROCK SILT CHECK.

INITIALLY APPLY 4 OUNCES OF POLYACRYLAMIDE (PAM) TO TOP OF MATTING SECTION AND AFTER EVERY RAINFALL EVENT THAT EQUALS OR EXCEEDS 0.50 INCHES.

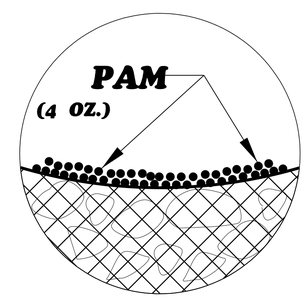

INSET A

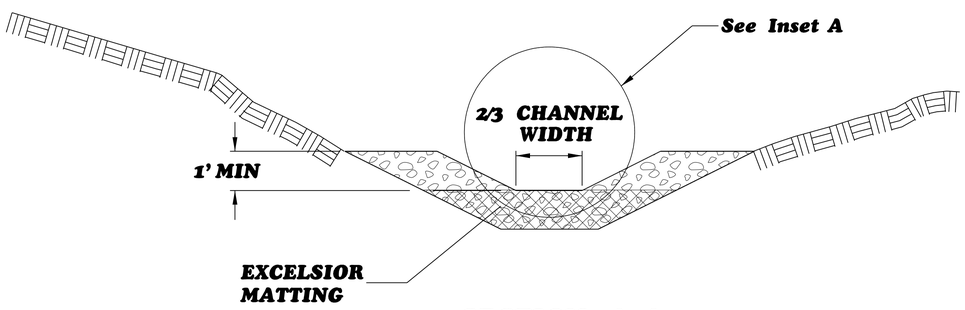

SECTION A-A

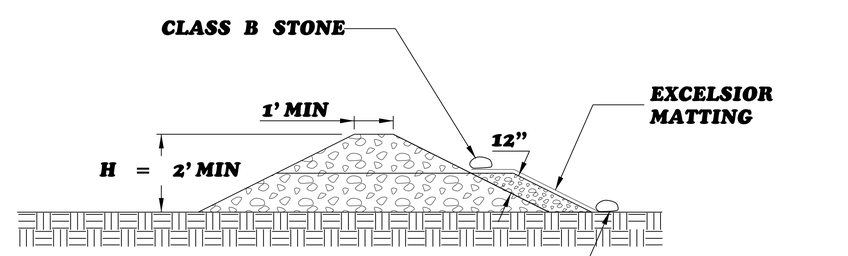

SECTION B-B

NOT TO SCALE

8/17/99
5/28/2021
R:\Environmental\Design\500068_HYD_EC_PSH_021.dgn
christian.bund

DocuSign Envelope ID: FE584E6F-C9DA-48A2-A14A-7A0A0AE30F04

PROJECT REFERENCE NO.	SHEET NO.
B-6001	EC-3

DIVISION OF HIGHWAYS
STATE OF NORTH CAROLINA

SOIL STABILIZATION SUMMARY SHEET

MATTING FOR EROSION CONTROL

CONST SHEET NO.	LINE	FROM STATION	TO STATION	SIDE	ESTIMATE (SY)
4	-L-	12+00	13+40	RT	150
4	-L-	16+71	17+12	LT	60
5	-L-	17+12	18+50	RT	290
				SUBTOTAL	500
MISCELLANEOUS MATTING TO BE INSTALLED AS DIRECTED BY THE ENGINEER					1510
				TOTAL	2010
				SAY	2050

MATTING FOR EROSION CONTROL

CONST SHEET NO.	LINE	FROM STATION	TO STATION	SIDE	ESTIMATE (SY)

8/17/99
5/28/2021
R:\Environmental\Design\5000068_HYD_EC_PSH_03.dgn
christianbund

DocuSign Envelope ID: FE584E6F-C9DA-48A2-A14A-7A0A0AE30F04

DIVISION OF HIGHWAYS
STATE OF NORTH CAROLINA

SOIL STABILIZATION TIMEFRAMES

SITE DESCRIPTION	STABILIZATION TIME	TIMEFRAME EXCEPTIONS
PERIMETER DIKES, SWALES, DITCHES AND SLOPES	7 DAYS	NONE
HIGH QUALITY WATER (HQW) ZONES	7 DAYS	NONE
SLOPES STEEPER THAN 3:1	7 DAYS	IF SLOPES ARE 10' OR LESS IN LENGTH AND ARE NOT STEEPER THAN 2:1, 14 DAYS ARE ALLOWED.
SLOPES 3:1 OR FLATTER	14 DAYS	7 DAYS FOR SLOPES GREATER THAN 50' IN LENGTH.
ALL OTHER AREAS WITH SLOPES FLATTER THAN 4:1	14 DAYS	NONE, EXCEPT FOR PERIMETERS AND HQW ZONES.

8/17/99
5/28/2021
R:\Environmental\Design\5100068_HYD_EC_PSH_03A.dgn
christian.hurd

DocuSign Envelope ID: FE584E6F-C9DA-48A2-A14A-7A0A0AE30F04

PROJECT REFERENCE NO.	SHEET NO.
B-6001	EC-4/CONST.4

NV5 ENGINEERS & CONSULTANTS, INC.
6750 TRYON ROAD
CARY, NC 27518
P: 919.851.1912 www.NV5.com
NC License # F-1333
formerly CALYX Engineers & Consultants

NOTE:
PLACE TEMPORARY ROCK SEDIMENT DAMS TYPE – B AND TEMPORARY ROCK SILT CHECKS TYPE – A AT DRAINAGE OUTLETS.

CLEARING AND GRUBBING
EROSION CONTROL FOR
CONSTRUCTION SHEET 4

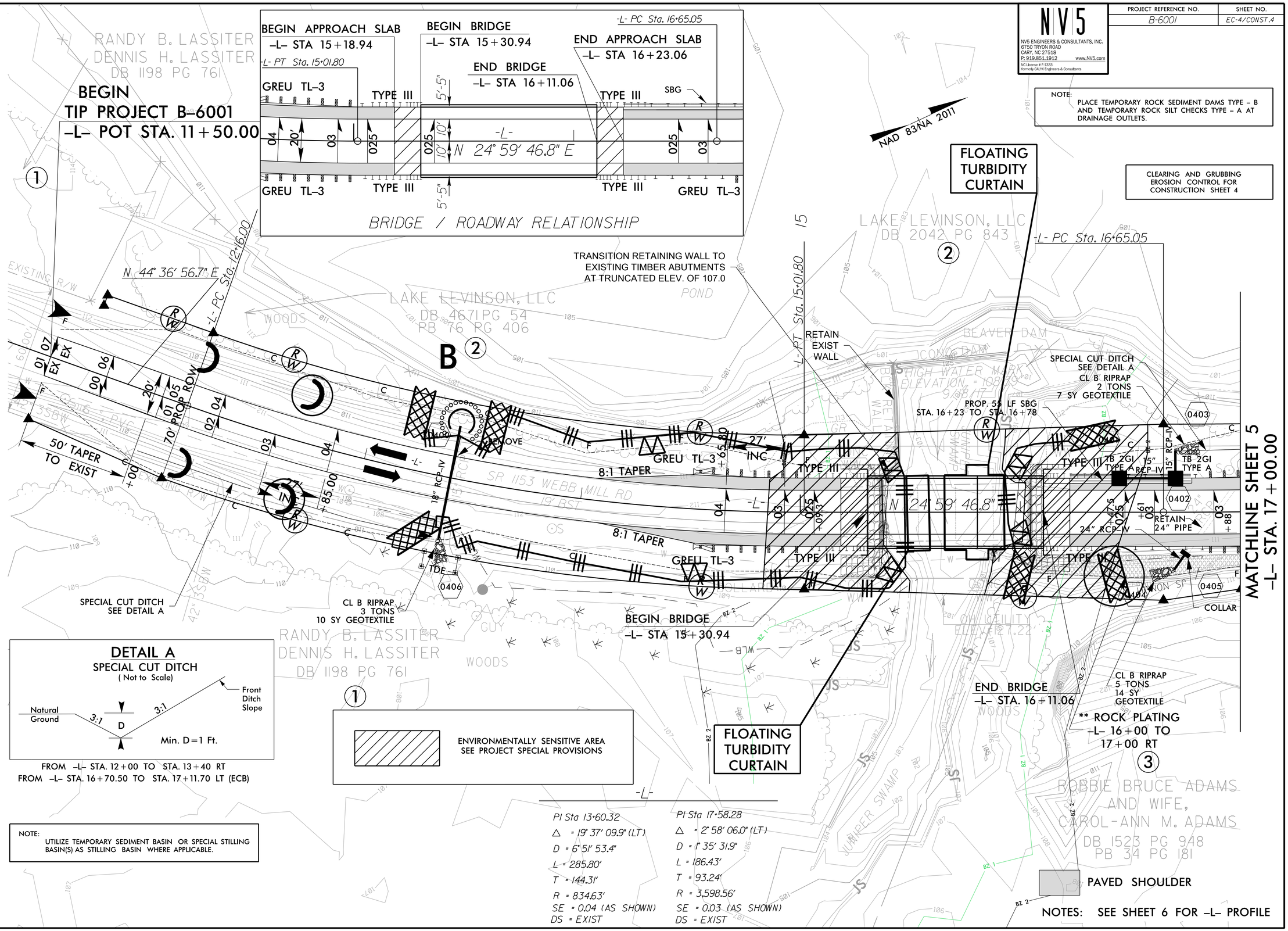

NOTE:
UTILIZE TEMPORARY SEDIMENT BASIN OR SPECIAL STILLING BASIN(S) AS STILLING BASIN WHERE APPLICABLE.

REVISIONS

8/17/99

5/28/2021
R:\Environmental\Design\500068_HYD_EC_PSH_04.dgn
christianlund

DocuSign Envelope ID: FE584E6F-C9DA-48A2-A14A-7A0A0AE30F04

PROJECT REFERENCE NO.	SHEET NO.
B-6001	EC-5/CONST.5

NV5
NV5 ENGINEERS & CONSULTANTS, INC.
6750 TRYON ROAD
CARY, NC 27518
P: 919.851.1912 www.NV5.com
NC License # F-1333
formerly CALYX Engineers & Consultants

CLEARING AND GRUBBING
EROSION CONTROL FOR
CONSTRUCTION SHEET 5

NOTE:
PLACE TEMPORARY ROCK SEDIMENT DAMS TYPE – B AND TEMPORARY ROCK SILT CHECKS TYPE – A AT DRAINAGE OUTLETS.

NAD 83/NA 2011

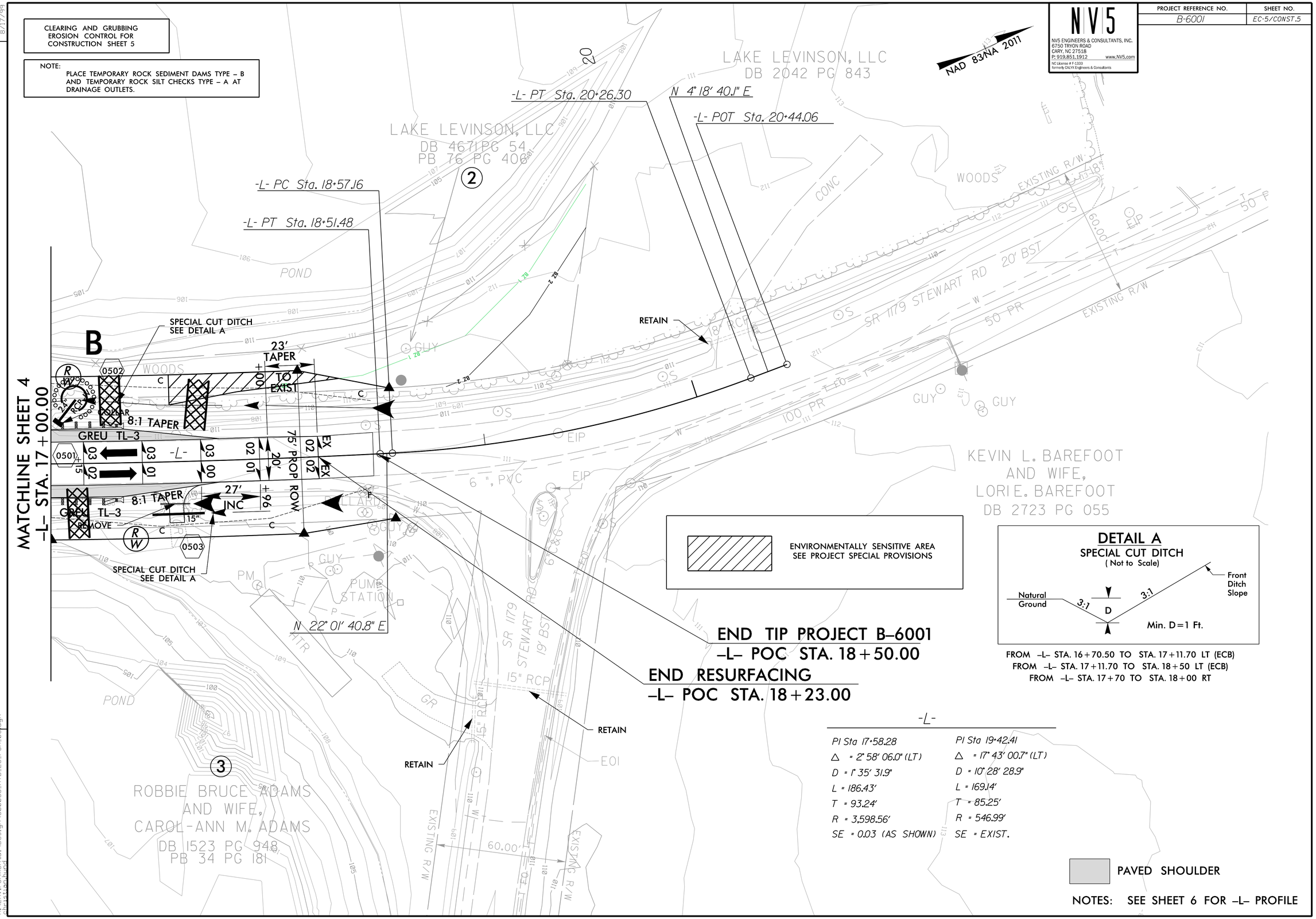

ENVIRONMENTALLY SENSITIVE AREA
SEE PROJECT SPECIAL PROVISIONS

DETAIL A
SPECIAL CUT DITCH
(Not to Scale)

FROM –L– STA. 16+70.50 TO STA. 17+11.70 LT (ECB)
FROM –L– STA. 17+11.70 TO STA. 18+50 LT (ECB)
FROM –L– STA. 17+70 TO STA. 18+00 RT

-L-

PI Sta 17+58.28	PI Sta 19+42.41
Δ = 2° 58' 06.0" (LT)	Δ = 17° 43' 00.7" (LT)
D = 1° 35' 31.9"	D = 10° 28' 28.9"
L = 186.43'	L = 169.14'
T = 93.24'	T = 85.25'
R = 3,598.56'	R = 546.99'
SE = 0.03 (AS SHOWN)	SE = EXIST.

PAVED SHOULDER

NOTES: SEE SHEET 6 FOR –L– PROFILE

REVISIONS

8/17/99

5/28/2021
R:\Environmental\Design\500068_HYD_EC_PSH_05.dgn
christianburd

DocuSign Envelope ID: FE584E6F-C9DA-48A2-A14A-7A0A0AE30F04

PROJECT REFERENCE NO.	SHEET NO.
B-6001	EC-6/CONST.4

NV5
NV5 ENGINEERS & CONSULTANTS, INC.
6750 TRYON ROAD
CARY, NC 27518
P: 919.851.1912 www.NV5.com
NC License # F-1333
formerly CALYX Engineers & Consultants

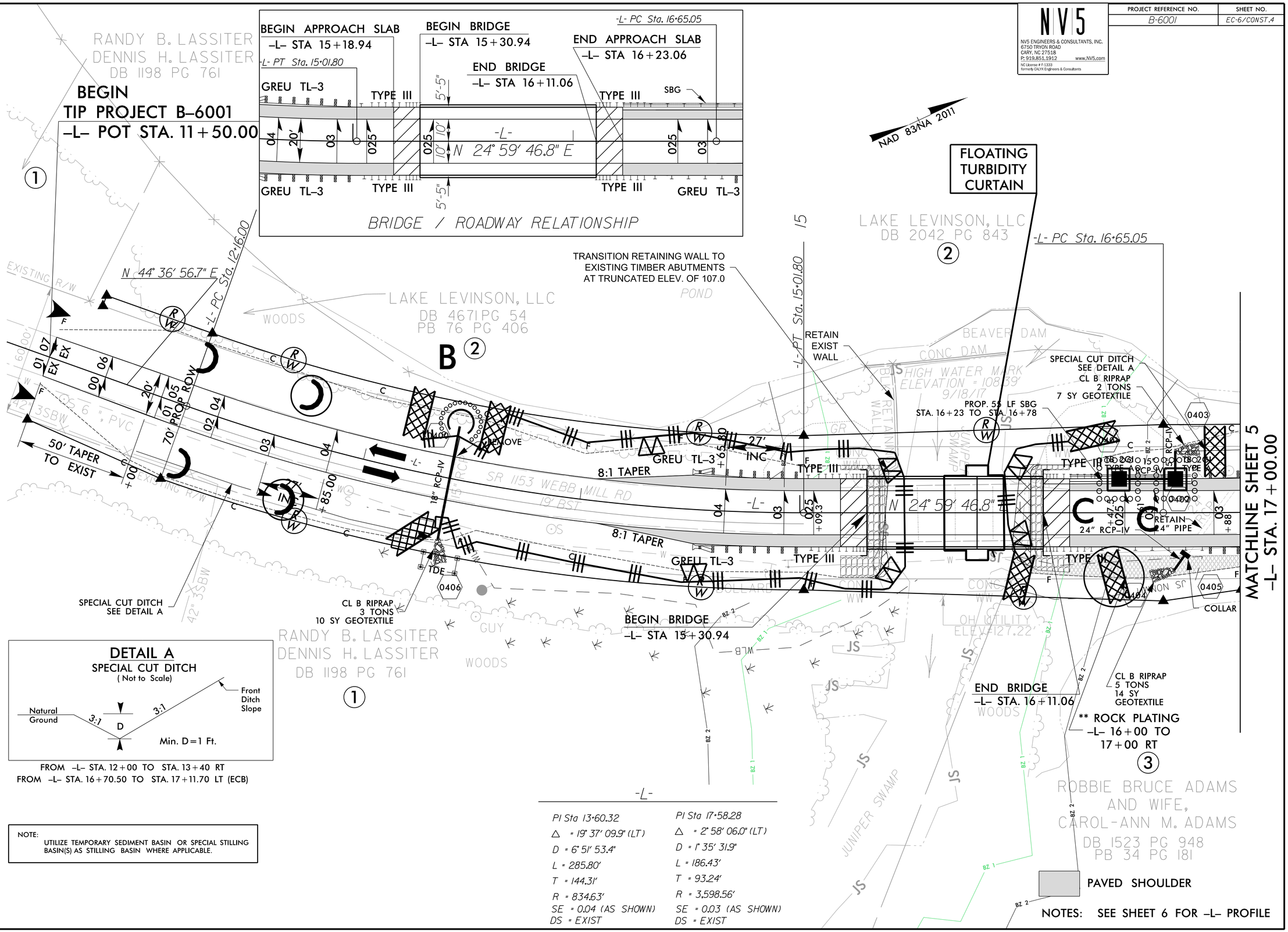

DocuSign Envelope ID: FE584E6F-C9DA-48A2-A14A-7A0A0AE30F04

PROJECT REFERENCE NO.	SHEET NO.
B-6001	EC-7/CONST.5

NV5 ENGINEERS & CONSULTANTS, INC.
6750 TRYON ROAD
CARY, NC 27518
P: 919.851.1912 www.NV5.com
NC License # F-1333
formerly CALYX Engineers & Consultants

NAD 83/NA 2011

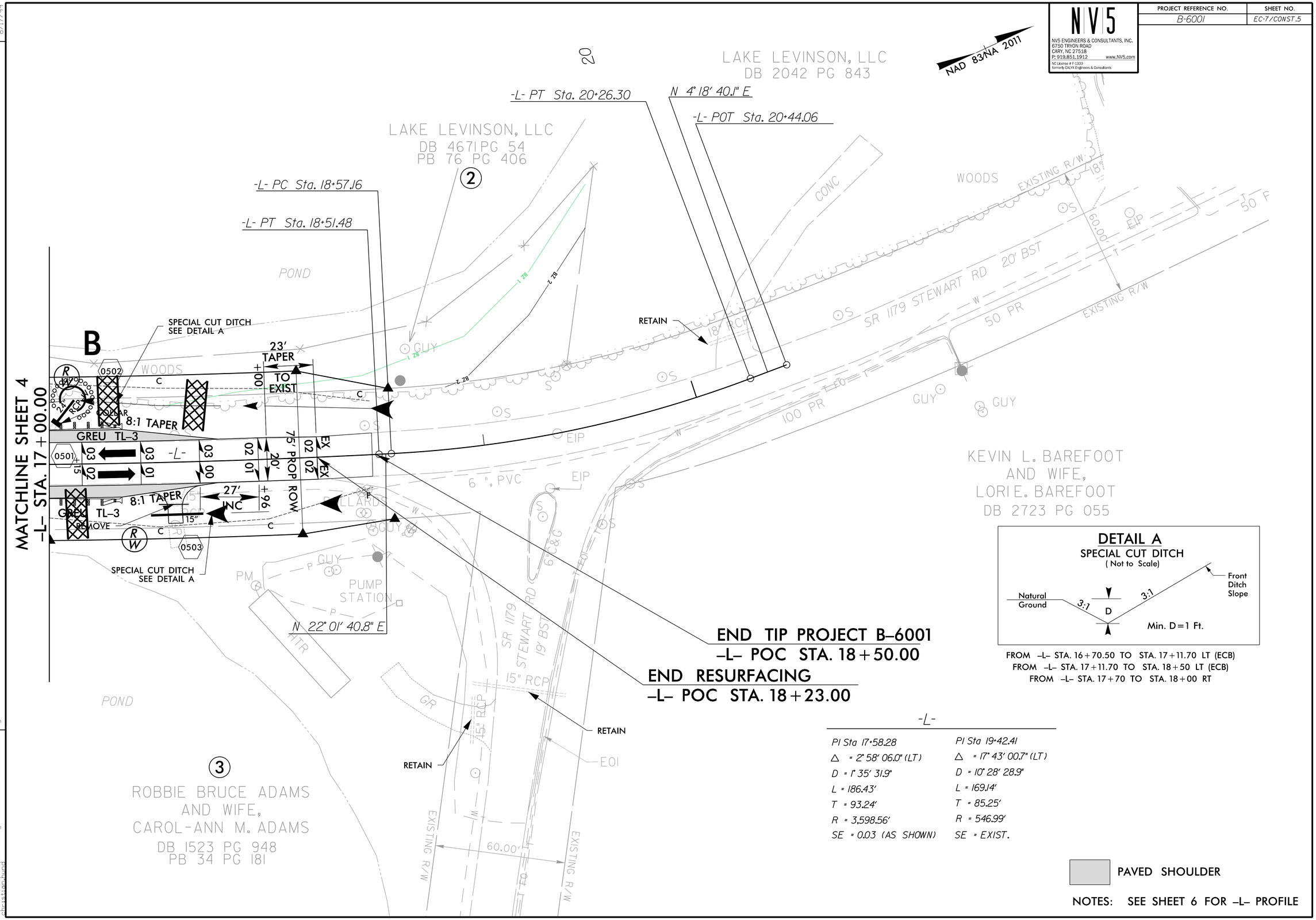

DETAIL A
SPECIAL CUT DITCH
(Not to Scale)

FROM -L- STA. 16+70.50 TO STA. 17+11.70 LT (ECB)
FROM -L- STA. 17+11.70 TO STA. 18+50 LT (ECB)
FROM -L- STA. 17+70 TO STA. 18+00 RT

-L-

PI Sta 17+58.28	PI Sta 19+42.41
Δ = 2° 58' 06.0" (LT)	Δ = 17° 43' 00.7" (LT)
D = 1° 35' 31.9"	D = 10° 28' 28.9"
L = 186.43'	L = 169.14'
T = 93.24'	T = 85.25'
R = 3,598.56'	R = 546.99'
SE = 0.03 (AS SHOWN)	SE = EXIST.

PAVED SHOULDER

NOTES: SEE SHEET 6 FOR -L- PROFILE

REVISIONS

8/17/99

5/28/2021
R:\Environmental\Design\500068_HYD_EC_PSH_07.dgn
christianburd

DocuSign Envelope ID: FE584E6F-C9DA-48A2-A14A-7A0A0AE30F04

STATE	STATE PROJECT REFERENCE NO.	SHEET NO.	TOTAL SHEETS
N.C.	B-6001	RF-1	10
STATE PROJ. NO.	F. A. PROJ. NO.	DESCRIPTION	

PLANTING DETAILS

SEEDLING / LINER BAREROOT PLANTING DETAIL

HEALING IN

1. Locate a healing-in site in a shady, well protected area.
2. Excavate a flat bottom trench 12 inches deep and provide drainage.

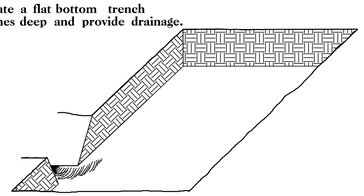

3. Backfill the trench with 2 inches well rotted sawdust. Place a 2 inch layer of well rotted sawdust at a sloping angle at one end of the trench.

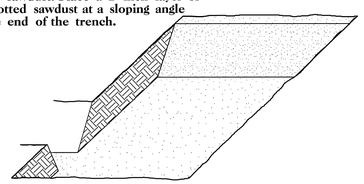

4. Place a single layer of plants against the sloping end so that the root collar is at ground level.

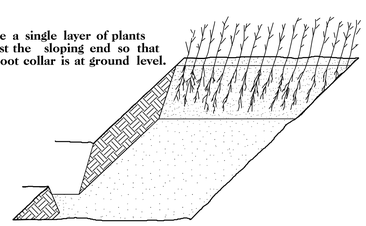

5. Place a 2 inch layer of well rotted sawdust over the roots maintaining a sloping angle.

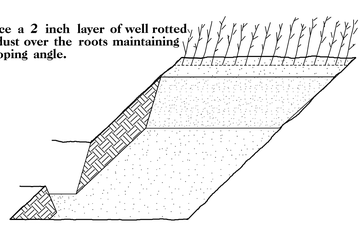

6. Repeat layers of plants and sawdust as necessary and water thoroughly.

DIBBLE PLANTING METHOD
USING THE KBC PLANTING BAR

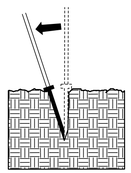

1. Insert planting bar as shown and pull handle toward planter.

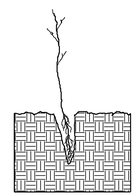

2. Remove planting bar and place seedling at correct depth.

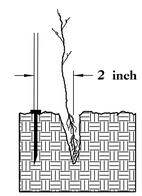

3. Insert planting bar 2 inches toward planter from seedling.

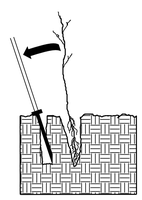

4. Pull handle of bar toward planter, firming soil at bottom.

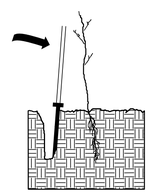

5. Push handle forward firming soil at top.

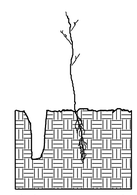

6. Leave compaction hole open. Water thoroughly.

PLANTING NOTES:

PLANTING BAG
During planting, seedlings shall be kept in a moist canvas bag or similar container to prevent the root systems from drying.

KBC PLANTING BAR
Planting bar shall have a blade with a triangular cross section, and shall be 12 inches long, 4 inches wide and 1 inch thick at center.

ROOT PRUNING
All seedlings shall be root pruned, if necessary, so that no roots extend more than 10 inches below the root collar.

REFORESTATION

☐ TREE REFORESTATION SHALL BE PLANTED 6 FT. TO 10 FT. ON CENTER, RANDOM SPACING, AVERAGING 8 FT. ON CENTER, APPROXIMATELY 680 PLANTS PER ACRE.

REFORESTATION

MIXTURE, TYPE, SIZE, AND FURNISH SHALL CONFORM TO THE FOLLOWING:

40%	LIRIODENDRON TULIPIFERA	TULIP POPLAR	12 in – 18 in BR
30%	PLATANUS OCCIDENTALIS	AMERICAN SYCAMORE	12 in – 18 in BR
30%	BETULA NIGRA	RIVER BIRCH	12 in – 18 in BR

REFORESTATION DETAIL SHEET

N.C.D.O.T. - ROADSIDE ENVIRONMENTAL UNIT

DocuSign Envelope ID: FE584E6F-C9DA-48A2-A14A-7A0A0AE30F04

09/08/99

TIP PROJECT: B-6001

CONTRACT: DD00354

See Sheet 1A For Index of Sheets

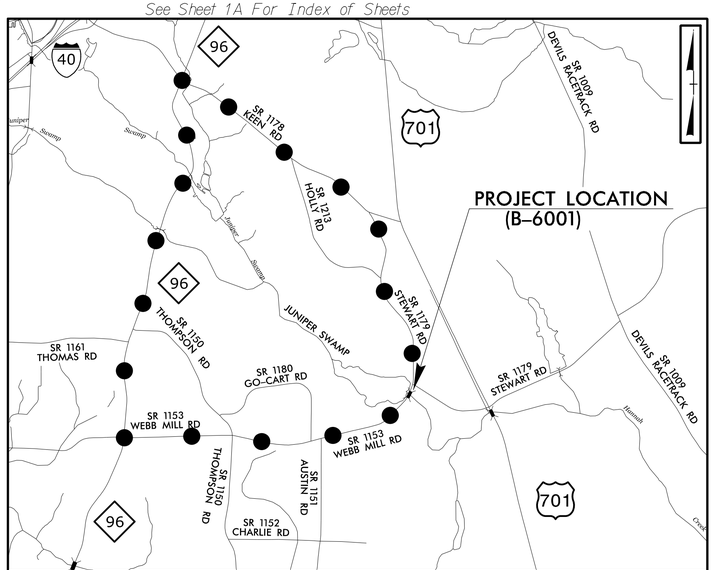

VICINITY MAP
(NOT TO SCALE)

DETOUR ROUTE (APPROXIMATE LENGTH = 7 MILES)

STATE OF NORTH CAROLINA
DIVISION OF HIGHWAYS

JOHNSTON COUNTY

NAD 83/2011

STATE	STATE PROJECT REFERENCE NO.	SHEET NO.	TOTAL SHEETS
N.C.	B-6001	1	

STATE PROJ. NO.	F.A. PROJ. NO.	DESCRIPTION
48196.1.1	BRZ-1153(009)	PE

LOCATION: REPLACE BRIDGE NO. 68 ON SR 1153 (WEBB MILL RD) OVER JUNIPER SWAMP

TYPE OF WORK: WATERLINE CONSTRUCTION / RELOCATION

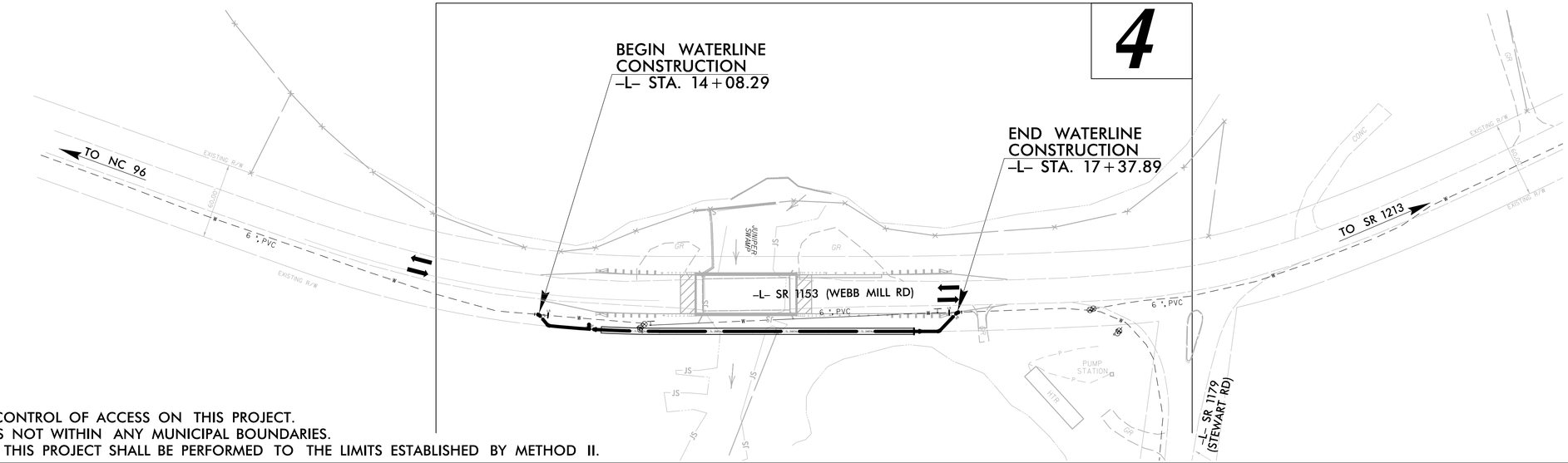

THERE IS NO CONTROL OF ACCESS ON THIS PROJECT.
THIS PROJECT IS NOT WITHIN ANY MUNICIPAL BOUNDARIES.
CLEARING ON THIS PROJECT SHALL BE PERFORMED TO THE LIMITS ESTABLISHED BY METHOD II.

GRAPHIC SCALES

20 10 0 20 40
PLANS

20 10 0 20 40
PROFILE (HORIZONTAL)

4 2 0 4 8
PROFILE (VERTICAL)

INDEX OF SHEETS

SHEET NO.:	DESCRIPTION:
UC-1	TITLE SHEET
UC-2	UTILITY SYMBOLOGY
UC-3	NOTES
UC-3A	DETAILS
UC-3B	DETAILS
UC-3C	DETAILS
UC-4	UTILITY CONSTRUCTION SHEET
UC-5	PROFILE SHEET

WATER AND SEWER OWNERS ON PROJECT

(A) WATER	JOHNSTON COUNTY
(B) TELEPHONE	CENTURY LINK
(C) POWER	DUKE ENERGY

Prepared by:

NV5

NV5 ENGINEERS & CONSULTANTS, INC.
3300 REGENCY PARKWAY, SUITE 100
CARY, NC 27518
P: 919.851.1912 www.NV5.com
NC License # F-1333
formerly CALYX Engineers & Consultants

L. KEVIN AUSTIN, PE
PROJECT MANAGER

MICHAEL ANDREW HOLT, PE
ROADWAY PROJECT DESIGN ENGINEER

RUSSELL E. BROADWELL, PE
NCDOT CONTACT

UTILITY DESIGN ENGINEER

7/7/2021

DocuSigned by:
0F3633C4932D417...

NORTH CAROLINA PROFESSIONAL SEAL 027851 ENGINEER PATRICK C. PEREZ

P.E.

SIGNATURE:

STATE OF NORTH CAROLINA DEPARTMENT OF TRANSPORTATION

7/6/2021
G:\Project\2016\2016032.19\LD\Design\Plots\UC-1.dgn
11:51:01 AM

DocuSign Envelope ID: FE584E6F-C9DA-48A2-A14A-7A0A0AE30F04

12/2/2016

PROJECT REFERENCE NO.	SHEET NO.
B-6001	UC-2

STATE OF NORTH CAROLINA
DIVISION OF HIGHWAYS

UTILITIES PLAN SHEET SYMBOLS

PROPOSED WATER SYMBOLS

- Water Line (Sized as Shown) — 12" WL
- 11¼ Degree Bend
- 22½ Degree Bend
- 45 Degree Bend
- 90 Degree Bend
- Plug
- Tee
- Cross
- Reducer
- Gate Valve — GV
- Butterfly Valve — BV
- Tapping Valve — TGV
- Line Stop — LS
- Line Stop with Bypass — LS/BP
- Blow Off — BO
- Fire Hydrant — PFH
- Relocate Fire Hydrant — RFH
- Remove Fire Hydrant — REM FH
- Water Meter — PWM
- Relocate Water Meter — RWM
- Remove Water Meter — REM WM
- Water Pump Station — PS(W)
- RPZ Backflow Preventer — PRPZ
- DCV Backflow Preventer — PBFP
- Relocate RPZ Backflow Preventer — RRPZ
- Relocate DCV Backflow Preventer — RBFP

PROPOSED SEWER SYMBOLS

- Gravity Sewer Line (Sized as Shown) — 12" SS
- Force Main Sewer Line (Sized as Shown) — 12" FSS
- Manhole (Sized per Note)
- Sewer Pump Station — PS(SS)

PROPOSED MISCELLANOUS UTILITIES SYMBOLS

- Power Pole
- Telephone Pole
- Joint Use Pole
- Telephone Pedestal — TEL PED
- Utility Line by Others (Type as Shown) — PROP O/H POW LINES
- Trenchless Installation — 12" TL INSTALL
- Encasement by Open Cut — 24" ENCAS BY OC
- Encasement — 24" ENCASEMENT
- Thrust Block
- Air Release Valve — AR
- Utility Vault — UV
- Concrete Pier — CP
- Steel Pier — SP
- Plan Note — NOTE
- Pay Item Note — PAY ITEM

EXISTING UTILITIES SYMBOLS

- Power Pole
- Telephone Pole
- Joint Use Pole
- Utility Pole
- Utility Pole with Base
- H-Frame Pole
- Power Transmission Line Tower
- Water Manhole
- Power Manhole
- Telephone Manhole
- Sanitary Sewer Manhole
- Hand Hole for Cable
- Power Transformer
- Telephone Pedestal
- CATV Pedestal
- Gas Valve
- Gas Meter
- Located Miscellaneous Utility Object
- Abandoned According to Utility Records — AATUR
- End of Information — E.O.I.
- *Underground Power Line
- *Underground Telephone Cable
- *Underground Telephone Conduit
- *Underground Fiber Optics Telephone Cable
- *Underground TV Cable
- *Underground Fiber Optics TV Cable
- *Underground Gas Pipeline
- Aboveground Gas Pipeline — A/G Gas
- *Underground Water Line
- Aboveground Water Line — A/G Water
- *Underground Gravity Sanitary Sewer Line — SS
- Aboveground Gravity Sanitary Sewer Line — A/G Sanitary Sewer
- *Underground SS Forced Main Line
- Underground Unknown Utility Line
- SUE Test Hole
- Water Meter
- Water Valve
- Fire Hydrant
- Sanitary Sewer Cleanout

*For Existing Utilities

- Utility Line Drawn from Record (Type as Shown)
- Designated Utility Line (Type as Shown)

DocuSign Envelope ID: FE584E6F-C9DA-48A2-A14A-7A0A0AE30F04

8/17/99

PROJECT REFERENCE NO.	SHEET NO.
B-6001	UC-3

UTILITY DESIGN ENGINEER

NORTH CAROLINA PROFESSIONAL SEAL 027851 ENGINEER PATRICK C. PERET

7/1/2021

DOCUMENT NOT CONSIDERED FINAL UNLESS ALL SIGNATURES COMPLETED

UTILITY CONSTRUCTION

GENERAL NOTES:

1. THE PROPOSED UTILITY CONSTRUCTION SHALL MEET THE APPLICABLE REQUIREMENTS OF THE NC DEPARTMENT OF TRANSPORTATION'S "STANDARD SPECIFICATIONS FOR ROADS AND STRUCTURES" DATED JANUARY 2018.

2. THE EXISTING UTILITIES BELONG TO
WATER - JOHNSTON COUNTY
TELEPHONE - CENTURY LINK
POWER - DUKE ENERGY

3. ALL WATER LINES TO BE INSTALLED WITHIN COMPLIANCE OF THE RULES AND REGULATIONS OF THE NORTH CAROLINA DEPARTMENT OF ENVIRONMENTAL QUALITY, DIVISION OF WATER RESOURCES, PUBLIC WATER SUPPLY SECTION AND JOHNSTON COUNTY..

4. THE UTILITY OWNER OWNS THE EXISTING UTILITY FACILITIES AND WILL OWN THE NEW UTILITY FACILITIES AFTER ACCEPTANCE BY THE DEPARTMENT. THE DEPARTMENT OWNS THE CONSTRUCTION CONTRACT AND HAS ADMINISTRATIVE AUTHORITY. COMMUNICATIONS AND DECISIONS BETWEEN THE CONTRACTOR AND UTILITY OWNER ARE NOT BINDING UPON THE DEPARTMENT OR THIS CONTRACT UNLESS AUTHORIZED BY THE ENGINEER. AGREEMENTS BETWEEN THE UTILITY OWNER AND CONTRACTOR FOR THE WORK THAT IS NOT PART OF THIS CONTRACT OR IS SECONDARY TO THIS CONTRACT ARE ALLOWED, BUT ARE NOT BINDING UPON THE DEPARTMENT.

5. PROVIDE ACCESS FOR THE DEPARTMENT PERSONNEL AND THE OWNER'S REPRESENTATIVES TO ALL PHASES OF CONSTRUCTION. NOTIFY DEPARTMENT PERSONNEL AND THE UTILITY OWNER TWO WEEKS PRIOR TO COMMENCEMENT OF ANY WORK AND ONE WEEK PRIOR TO SERVICE INTERRUPTION. KEEP UTILITY OWNERS' REPRESENTATIVES INFORMED OF WORK PROGRESS AND PROVIDE OPPORTUNITY FOR INSPECTION OF CONSTRUCTION AND TESTING.

6. THE PLANS DEPICT THE BEST AVAILABLE INFORMATION FOR THE LOCATION, SIZE, AND TYPE OF MATERIAL FOR ALL EXISTING UTILITIES. MAKE INVESTIGATIONS FOR DETERMINING THE EXACT LOCATION, SIZE, AND TYPE MATERIAL OF THE EXISTING FACILITIES AS NECESSARY FOR THE CONSTRUCTION OF THE PROPOSED UTILITIES AND FOR AVOIDING DAMAGE TO EXISTING FACILITIES. REPAIR ANY DAMAGE INCURRED TO EXISTING FACILITIES TO THE ORIGINAL OR BETTER CONDITION AT NO ADDITIONAL COST TO THE DEPARTMENT.

7. MAKE FINAL CONNECTIONS OF THE NEW WORK TO THE EXISTING SYSTEM WHERE INDICATED ON THE PLANS, AS REQUIRED TO FIT THE ACTUAL CONDITIONS, OR AS DIRECTED.

8. MAKE CONNECTIONS BETWEEN EXISTING AND PROPOSED UTILITIES AT TIMES MOST CONVENIENT TO THE PUBLIC, WITHOUT ENDANGERING THE UTILITY SERVICE, AND IN ACCORDANCE WITH THE UTILITY OWNER'S REQUIREMENTS. MAKE CONNECTIONS ON WEEKENDS, AT NIGHT, AND ON HOLIDAYS IF NECESSARY.

9. ALL UTILITY MATERIALS SHALL BE APPROVED PRIOR TO DELIVERY TO THE PROJECT. SEE 1500-7, " SUBMITTALS AND RECORDS" IN SECTION 1500 OF THE STANDARD SPECIFICATIONS.

PROJECT SPECIFIC NOTES:

1. CONTRACTOR'S ATTENTION IS DIRECTED TO SECTIONS 102, 107, AND 1550 OF THE STANDARD SPECIFICATIONS CONCERNING TRENCHLESS INSTALLATION. IT IS CONTRACTOR'S RESPONSIBILITY TO HAVE BORE DESIGNED AND SEALED BY A LICENSED NORTH CAROLINA PROFESSIONAL ENGINEER. NO DAMAGE IS ALLOWED TO RIVER, WETLANDS, OR BUFFER ZONES.

2. IF HDPE PIPE IS INSTALLED BY DIRECTIONAL DRILL. IT SHALL BE FILLED WITH WATER AND NOT BE CONNECTED TO ANY OTHER PIPE OR FITTINGS FOR ONE WEEK FROM THE TIME OF INSTALLATION.

LIST OF STANDARD DRAWINGS

SEE SHEET UC-3A THRU UC-3C

6/30/2021
10:42:13 AM
C:\pwworking\2016\2016@32.19\LD\Design\Plots\UC-3.dgn

DocuSign Envelope ID: FE584E6F-C9DA-48A2-A14A-7A0A0AE30F04

8/17/99

PROJECT REFERENCE NO.	SHEET NO.
B-6001	UC-3A

UTILITY DESIGN ENGINEER

NORTH CAROLINA PROFESSIONAL SEAL 021851 ENGINEER PATRICK C. PEREZ
7/1/2021

DOCUMENT NOT CONSIDERED FINAL UNLESS ALL SIGNATURES COMPLETED

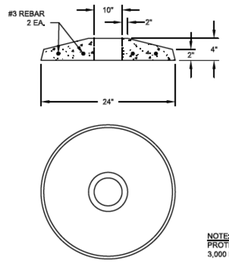

NOTE:
PROTECTOR RING SHALL BE 3,000 P.S.I. CONCRETE.

CONCRETE PROTECTOR RING

NOT TO SCALE

	Name	Date
Drawn By:		
Checked By:		
Approved By:		
Scale:		
Rev.	Description	Date / Init.

JOHNSTON COUNTY
Department of Public Utilities
P.O. Box 2263
Smithfield, NC 27577

WATER STANDARD DETAIL
Concrete Protector Ring

PAGE 14

NOTE:
1. MIN. OF 4 CU. FT. STONE (MORE IF REQ'D).
2. CONC. THRUST BLOCK TO HAVE MIN. OF 6 SQ. FT. BEARING ON SOLID BANK (MORE IF REQ'D.).
3. DRAIN HOLES AND FLANGES SHALL BE CLEAR OF CONC.
4. FIRE HYDRANT BARREL SHALL BE PLUMB.
5. ALL MATERIALS USED IN THE POTABLE WATER SYSTEM MUST BE NSF61 AND NSF372 CERTIFIED AND MEET THE LATEST FEDERAL SAFE DRINKING WATER ACT REQUIREMENTS.

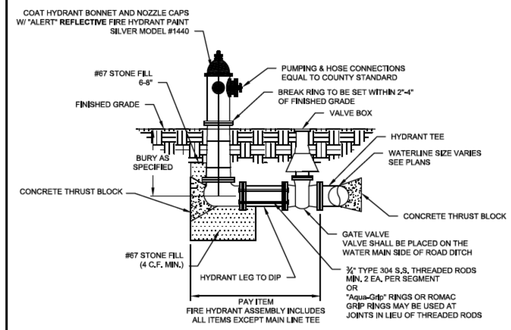

FIRE HYDRANT ASSEMBLY

NOT TO SCALE

****FIRE HYDRANTS INSTALLED ON EXISTING 6" WATER MAINS, MUST BE INSTALLED USING A 6"x6" TEE CUT INTO THE EXISTING WATER MAIN. FIRE HYDRANTS INSTALLED ON EXISTING WATER MAINS LARGER THAN 6", CAN BE INSTALLED USING A TAPPING SLEEVE AND VALVE ON THE EXISTING WATER MAIN.**

	Name	Date
Drawn By:		
Checked By:		
Approved By:		
Scale:		
Rev.	Description	Date / Init.

JOHNSTON COUNTY
Department of Public Utilities
P.O. Box 2263
Smithfield, NC 27577

WATER STANDARD DETAIL
Fire Hydrant Assembly

PAGE 4

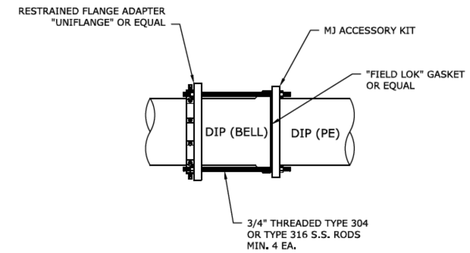

HARNESS RESTRAINT DETAIL

NOT TO SCALE

	Name	Date
Drawn By:		
Checked By:		
Approved By:		
Scale:		
Rev.	Description	Date / Init.

JOHNSTON COUNTY
Department of Public Utilities
P.O. Box 2263
Smithfield, NC 27577

WATER STANDARD DETAIL
Restraint Harness

PAGE 10

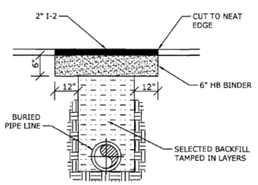

PAVEMENT REPAIRS FOR NCDOT ROAD OPEN CUTS

NOT TO SCALE

	Name	Date
Drawn By:		
Checked By:		
Approved By:		
Scale:		
Rev.	Description	Date / Init.

JOHNSTON COUNTY
Department of Public Utilities
P.O. Box 2263
Smithfield, NC 27577

WATER STANDARD DETAIL
Cutting and Replacing Pavement

PAGE 18

NOTE: PIPE SHALL BE BEDDED UP TO SPRING LINE AND MINIMUM 4" BELOW BOTTOM OF PIPE WHEN WET AREAS ARE ENCOUNTERED.

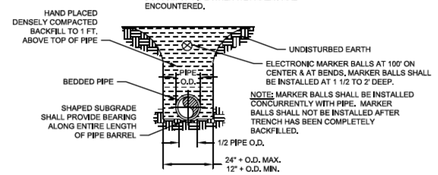

NOTE: MARKER BALLS SHALL BE INSTALLED CONCURRENTLY WITH PIPE. MARKER BALLS SHALL NOT BE INSTALLED AFTER TRENCH HAS BEEN COMPLETELY BACKFILLED.

NOTE:
WATER MAINS 8"Ø AND SMALLER SHALL HAVE MINIMUM OF 3' COVER, WATER MAINS LARGER THAN 8"Ø SHALL HAVE A MINIMUM OF 3'-6" COVER.

PIPE LAYING CONDITION

NOT TO SCALE

	Name	Date
Drawn By:		
Checked By:		
Approved By:		
Scale:		
Rev.	Description	Date / Init.

JOHNSTON COUNTY
Department of Public Utilities
P.O. Box 2263
Smithfield, NC 27577

WATER STANDARD DETAIL
Pipe Laying Condition

PAGE 17

NOTES:
1. CONCRETE SHALL BE 3,000 PSI MIN.
2. CONCRETE FOR THRUST BLOCKING SHALL BE KEPT FAIRLY DRY, THUS MAKING THE CONCRETE WEDGE SHAPE MORE EASILY FORMED WITH THE WIDEST PART (BLOCKING AREA) AGAINST UNDISTURBED SOIL.
3. NO CONCRETE SHALL COVER ANY BOLTS OR GLANDS.
4. ALL FITTING AND ACCESSORIES TO BE WRAPPED WITH 10 MIL POLYETHYLENE PRIOR TO POURING BLOCKING.
5. VOLUME OF THRUST BLOCKING SHALL BE AS SHOWN ON THE THRUST BLOCKING SCHEDULE.

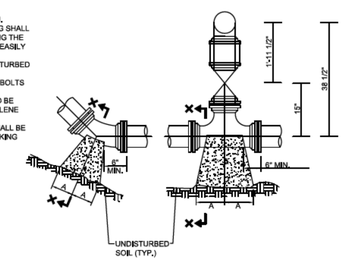

PLAN BENDS

PLAN TEES

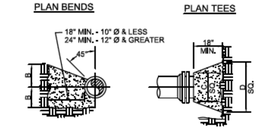

SECTION X-X
BENDS & TEES

PLAN & ELEV.
PLUGS

PIPE SIZE	90° BEND		45° BEND		22 1/2° BEND		11 1/4° BEND		TEE		PLUG	
	A	B	A	B	A	B	A	B	A	B	C	D
4"	8"	12"	8"	9"	8"	9"	8"	9"	8"	9"	10"	16"
6"	10"	12"	8"	10"	8"	9"	8"	9"	10"	10"	12"	18"
8"	10"	13"	10"	10"	8"	9"	8"	9"	10"	12"	12"	24"
10"	10"	14"	10"	12"	8"	10"	8"	10"	11"	14"	14"	20"
12"	20"	16"	12"	14"	8"	12"	8"	12"	14"	16"	16"	30"
14"	22"	18"	14"	16"	10"	14"	10"	14"	16"	18"	18"	34"
16"	26"	20"	16"	18"	12"	16"	12"	16"	18"	20"	20"	36"
20"	36"	26"	24"	18"	16"	13"	12"	9"	18"	18"	24"	48"
24"	48"	33"	33"	21"	18"	18"	16"	11"	21"	21"	28"	56"

THRUST BLOCK DETAIL

NOT TO SCALE

	Name	Date
Drawn By:		
Checked By:		
Approved By:		
Scale:		
Rev.	Description	Date / Init.

JOHNSTON COUNTY
Department of Public Utilities
P.O. Box 2263
Smithfield, NC 27577

WATER STANDARD DETAIL
Thrust Block

PAGE 8

6/30/2021 3:25:35 PM
J:\2016\2016032.19\LD\Design\Plots\UC-3A.dgn

DocuSign Envelope ID: FE584E6F-C9DA-48A2-A14A-7A0A0AE30F04

8/17/99

PROJECT REFERENCE NO.	SHEET NO.
B-6001	UC-3B

UTILITY DESIGN ENGINEER

NORTH CAROLINA PROFESSIONAL SEAL 021851 ENGINEER PATRICK C. PEREZ

7/1/2021

DOCUMENT NOT CONSIDERED FINAL UNLESS ALL SIGNATURES COMPLETED

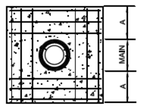

REINFORCING

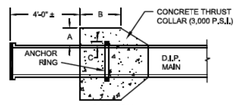

SECTION

NOTE:
8" TO 16" MAINS = 12-NO. 7 BARS
20" TO 36" MAINS = 12-NO. 8 BARS
BARS PLACED AS SHOWN

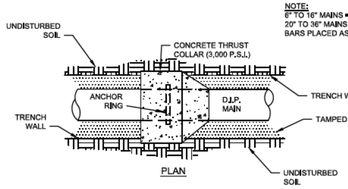

PLAN

SCHEDULE

PIPE DIAMETER	CONCRETE THRUST COLLAR		ANCHOR COLLAR	RINGS REQUIRED
	A	B	C	
6",8",12"	1'-0"	1'-0"	3"	ONE
16"	1'-4"	1'-0"	2"	ONE
20"	1'-4"	1'-0"	3"	ONE
24"	1'-4"	1'-0"	3"	TWO
30"	1'-4"	1'-2"	4"	TWO
36"	1'-4"	1'-4"	4"	TWO

THRUST COLLAR INSTALLATION

NOT TO SCALE

	Name	Date
Drawn By:		
Checked By:		
Approved By:		
Scale:		
Rev. Description	Date	Init.

JOHNSTON COUNTY
Department of Public Utilities
P.O. Box 2263
Smithfield, NC 27577

WATER
STANDARD DETAIL
Thrust Collar Installation

PAGE 9

NOTES:
1. VALVE MARKERS SHALL BE PLACED AT R/W.
2. LETTERS "MV" SHALL FACE TOWARDS VALVE.
3. MARKER SHALL HAVE BRASS OR BRONZE EMBED ON TOP OR SIDE.
4. **CONTRACTOR SHALL STAMP DISTANCE TO CENTER OF VALVE INTO EMBED.**
5. BLOW-OFF ASSEMBLY SHALL INCLUDE 1 EA. MARKER W/ "BO" OR "MV" CAST.

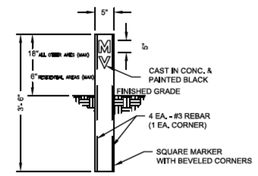

VALVE MARKER DETAIL

NOT TO SCALE

	Name	Date
Drawn By:		
Checked By:		
Approved By:		
Scale:		
Rev. Description	Date	Init.

JOHNSTON COUNTY
Department of Public Utilities
P.O. Box 2263
Smithfield, NC 27577

WATER
STANDARD DETAIL
Valve Marker

PAGE 15

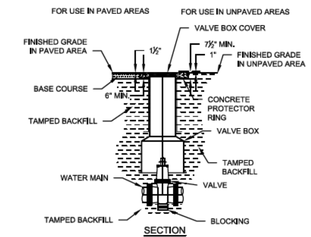

SECTION

NOTES:
1. D.I.P. MAY BE USED FOR VALVE BOX EXTENSIONS.
2. VALVE BOX SHOULD NOT CONTACT WATER MAIN OR VALVE.
3. CONCRETE PROTECTOR RING SHALL BE USED IN ALL UNPAVED AREAS.
4. ALL MATERIALS USED IN THE POTABLE WATER SYSTEM MUST BE NSF61 AND NSF372 CERTIFIED AND MEET THE LATEST FEDERAL SAFE DRINKING WATER ACT REQUIREMENTS.

VALVE AND VALVE BOX INSTALLATION

NOT TO SCALE

	Name	Date
Drawn By:		
Checked By:		
Approved By:		
Scale:		
Rev. Description	Date	Init.

JOHNSTON COUNTY
Department of Public Utilities
P.O. Box 2263
Smithfield, NC 27577

WATER
STANDARD DETAIL
Valve and Valve Box Installation

PAGE 13

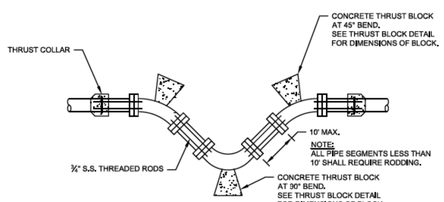

ROD REQUIREMENTS

SIZE OF 45° BEND	STATIC THRUST IN POUNDS	NUMBER OF RODS REQUIRED
6"	4,328	2
8"	7,694	2
12"	17,312	4
16"	30,779	6
20"	48,091	8
24"	69,252	10

GENERAL NOTES
1. RODS AND NUTS SHALL BE OF TYPE 304 OR TYPE 316 STAINLESS STEEL.
2. CONCRETE SHALL NOT CONTACT BOLTS OR ENDS OF MECHANICAL JOINT BENDS.

VERTICAL BEND RODDING AND BLOCKING DETAIL

NOT TO SCALE

	Name	Date
Drawn By:		
Checked By:		
Approved By:		
Scale:		
Rev. Description	Date	Init.

JOHNSTON COUNTY
Department of Public Utilities
P.O. Box 2263
Smithfield, NC 27577

WATER
STANDARD DETAIL
Critical Bend Rodding and Blocking Details

PAGE 7

6/30/2021
C:\Users\2016\2016032.19\LD\Design\Plots\UC-3B.dgn
14:29:27 PM

DocuSign Envelope ID: FE584E6F-C9DA-48A2-A14A-7A0A0AE30F04

8/17/99

PROJECT REFERENCE NO.	SHEET NO.
B-6001	UC-3C

UTILITY DESIGN ENGINEER

NORTH CAROLINA PROFESSIONAL SEAL 023851 ENGINEER PATRICK C. PEREZ

7/1/2021

DOCUMENT NOT CONSIDERED FINAL UNLESS ALL SIGNATURES COMPLETED

HDPE TO DUCTILE IRON TRANSITION

A

HDPE TO DUCTILE IRON (4 TO 32-INCH ONLY) TRANSITION ASSEMBLY

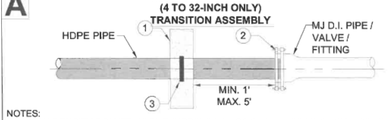

NO. DESCRIPTION
1. WALL BLOCKING, REFER TO DETAIL HD4 OR HD5
2. IPS x DIPS RESTRAINED MJ ADAPTER WITH STEEL PIPE STIFFENER AND KIT
3. WALL ANCHOR OR FLEX RESTRAINT, REFER TO DETAIL HD4 OR HD5

NOTES:
A. HIGH DENSITY POLYETHYLENE (HDPE) FITTINGS SHALL MEET THE REQUIREMENTS OF AWWA C906.
B. MECHANICAL FITTINGS SHALL BE SPECIFICALLY DESIGNED FOR USE WITH HDPE PIPE.
C. INSTALL STAINLESS STEEL INTERNAL STIFFENER IN THE END OF THE HDPE PIPE WHEN HDPE PIPE IS INSERTED INTO THE BELL END OF NON-HDPE PIPE, VALVE, FITTING, OR INTO THE HUB OF A MECHANICAL COUPLING.
D. INTERNAL STIFFENER CAN BE WEDGE TYPE OR SOLID BODY. STIFFENER WILL BE RATED FOR DR AND ID OF PIPE. FOR WATER, 304 OR 316 STAINLESS STEEL IS ALLOWED. FOR WASTEWATER, 316 SS IS REQUIRED.
E. MECHANICAL JOINT ADAPTERS SHALL BE PE4710 AND CAN BE MADE TO ASTM D 3261. IF MACHINED, ADAPTERS MUST MEET THE REQUIREMENTS OF ASTM F 2206. ADAPTERS SHALL HAVE A PRESSURE RATING EQUAL TO THE PIPE.
F. FIGURE ABOVE SHOWS TRANSITION TO BELL END OF DIP. FOR TRANSITION TO PLAIN END OF DIP, SEE PVC FIGURE.
G. EXTERNAL RESTRAINT DEVICES ARE NOT ALLOWED.

DETAIL HD4

NO SCALE

ELEVATION VIEW

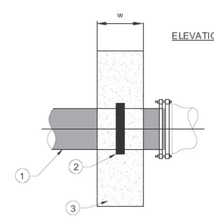

MINIMUM NUMBER OF FLEX RESTRAINTS BY PIPE SIZE	
HDPE NOMINAL PIPE SIZE (INCHES)	NUMBER OF FLEX RESTRAINTS
4 THROUGH 8	2
10 THROUGH 12	3

NO. DESCRIPTION
1. HDPE PIPE
2. ELECTROFUSED HDPE FLEX RESTRAINT OR WALL ANCHOR
3. CONCRETE WALL BLOCKING - F'C = MINIMUM 3,600 PSI.
4. FLEX RESTRAINTS FOR HDPE PIPE. SEE TABLE FOR REQUIRED NUMBER OF FLEX RESTRAINTS BY PIPE SIZE. COMPLY WITH MANUFACTURERS INSTRUCTIONS FOR NUMBER OF FLEX RESTRAINTS IF GREATER THAN SHOWN IN TABLE.
5. AWG NO. 12 GAUGE SOLID COPPER TRACER WIRE WITH BLUE 30 MIL HDPE INSULATION.

NOTES:
A. WHEN DIRECTED BY THE ENGINEER, THE CONCRETE WALL BLOCK SIZE MAY BE ADJUSTED, BASED ON ACTUAL SOIL CLASSIFICATION AND PIPE DIAMETER.
B. FLEX RESTRAINTS MUST BE RATED AT 8,000 LBS OF FORCE OR HIGHER.

REBAR DETAIL: FRONT VIEW

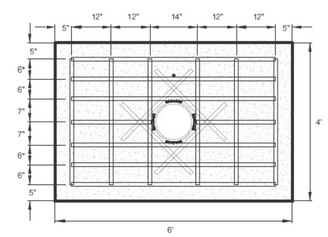

REBAR DETAIL: SIDE VIEW

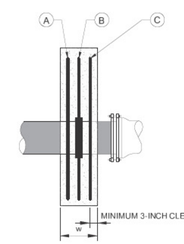

REBAR NOTES:
A. FOR 4 TO 10-INCH PIPE, PLACE ONE REBAR MAT AT LOCATION B ON THE REBAR DETAIL: SIDE VIEW.
B. FOR 12-INCH PIPE, PLACE TWO REBAR MATS - ONE AT LOCATION A AND ONE AT LOCATION C ON THE REBAR DETAIL: SIDE VIEW.

NOTES TO DESIGNER
A. ENGINEER TO CONFIRM ADEQUATE SOIL PRESSURE BEARING CAPACITY FOR THRUST BLOCK

REBAR SCHEDULE			
TYPE	LENGTH (INCHES)	NUMBER REQUIRED FOR ONE MAT	NUMBER REQUIRED FOR TWO MATS
VERTICAL	38	6	12
HORIZONTAL	62	6	12
DIAGONAL	30	4	8
HORIZONTAL	24	2	4

REBAR DIAMETER SCHEDULE				
HDPE NOMINAL PIPE DIAMETER (INCHES)	BAR SIZE	TOTAL REBAR LENGTH (FT)	TOTAL REBAR WEIGHT (LB) ONE MAT	TOTAL REBAR WEIGHT (LB) TWO MATS
4	#5	64	67	134
6	#5	64	67	134
8	#5	64	67	134
10	#5	64	67	134
12	#5	64	67	134

APPROX. DEAD END THRUST AT 200 PSI WATER PRESSURE		UNDISTURBED SOIL BEARING AREA (SQUARE FEET)	APPROX. SOIL PRESSURE	W MINIMUM WIDTH (INCHES)	APPROXIMATE CONCRETE VOLUME	
HDPE NOMINAL PIPE DIAMETER (INCHES)	TOTAL THRUST (POUNDS)		BEARING LOAD (LB/SQ FT)		(CUBIC FEET)	(CUBIC YARD)
4	2,130	15	142	10	20	0.74
6	4,616	15	308	10	20	0.74
8	7,823	15	522	12	24	0.89
10	12,153	15	810	12	24	0.89
12	17,094	15	1,140	14	28	1.04

6/30/2021
10:32:25 AM
C:\Projects\2016\2016032.19\LD\Design\Plots\UC-3C.dgn
14.72.29 PM
PEREZ

DocuSign Envelope ID: FE584E6F-C9DA-48A2-A14A-7A0A0AE30F04

GENERAL NOTES:

1. POTABLE WATER OWNED AND OPERATED BY JOHNSTON COUNTY.
2. ALL CONSTRUCTION TO BE COMPLETED IN ACCORDANCE WITH NCDOT AND JOHNSTON COUNTY WATER & SEWER.
3. EXISTING WATERLINE CAN BE SHUTDOWN BETWEEN 9:00 AM TO 3:00PM TO ALLOW TIE-IN. CONTRACTOR TO COORDINATE WITH JOHNSTON COUNTY WATER & SEWER DEPARTMENT.
4. PRIOR TO COMMENCING WORK ON ANY TRENCHLESS INSTALLATION, PROVIDE A DESIGN FOR THE TRENCHLESS INSTALLATION CERTIFIED BY AN ENGINEER LICENSED BY THE STATE OF NORTH CAROLINA, AS REQUIRED BY SUBARTICLE 1550-3(B) OF THE STANDARD SPECIFICATIONS. CALCULATIONS MUST BE PROVIDED TO ENSURE NO HYDRAULIC FRACTURING OF DRILLING FLUIDREACH THE SURFACE.

NAD 83/NA 2011

NV5 ENGINEERS & CONSULTANTS, INC.
3300 REGENCY PARKWAY, SUITE 100
CARY, NC 27518
P: 919.851.1912 www.NV5.com
NC License # F-1332
formerly CALYX Engineers & Consultants

PROJECT REFERENCE NO.	SHEET NO.
B-6001	UC-4
R/W SHEET NO.	

UTILITY DESIGN ENGINEER

NORTH CAROLINA PROFESSIONAL SEAL 027851 ENGINEER PATRICK C. PERCY
DocuSigned by:
DF3333C0A0A0A0A...
7/1/2021

DOCUMENT NOT CONSIDERED FINAL UNLESS ALL SIGNATURES COMPLETED

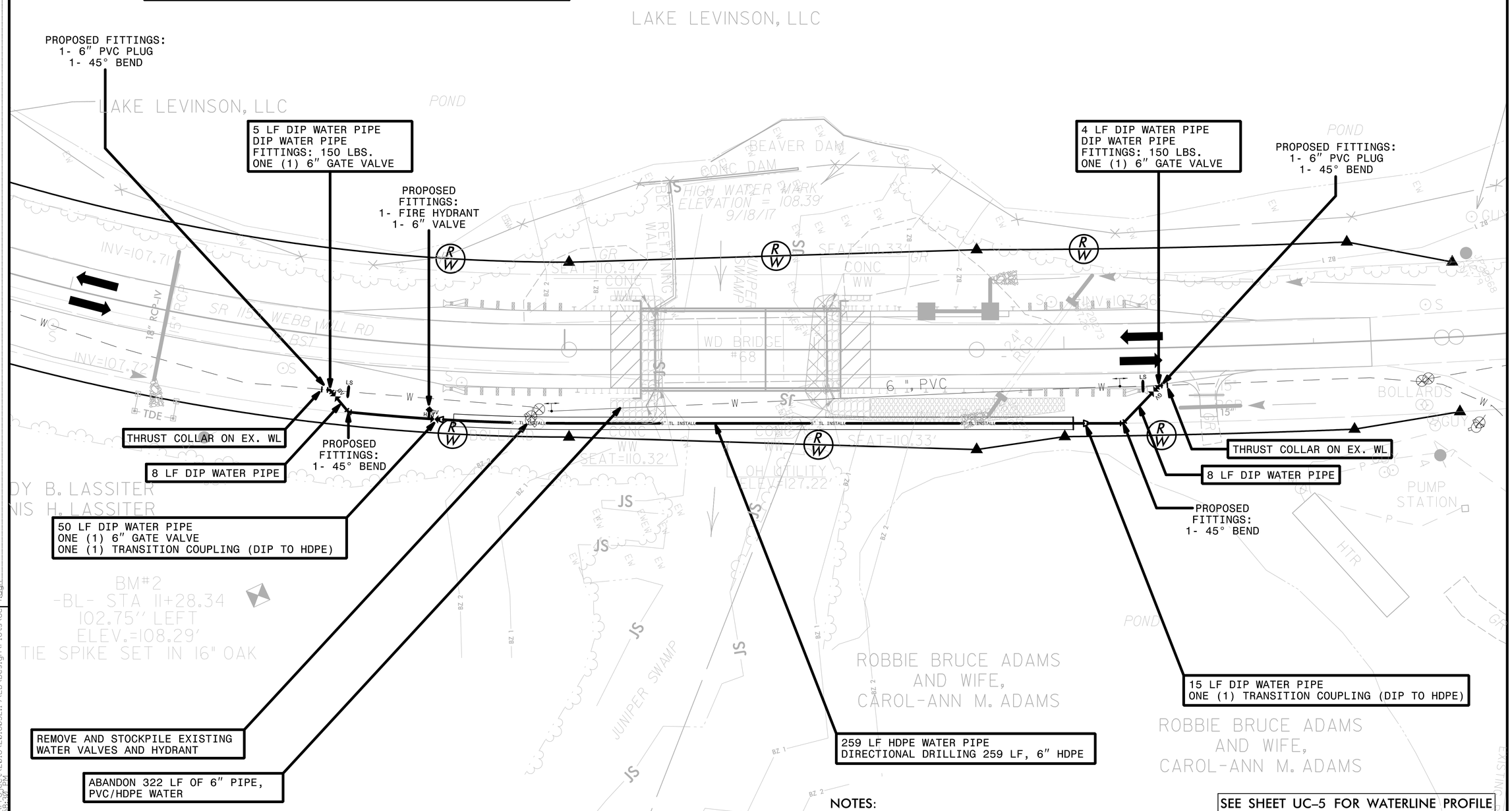

NOTES:

SEE SHEET UC-5 FOR WATERLINE PROFILE

REVISIONS

8/17/99

6/30/2021
G:\Projects\2016\2016032.19\LD\Design\Plots\UC-4.dgn
11:58:30 PM

DocuSign Envelope ID: FE584E6F-C9DA-48A2-A14A-7A0A0AE30F04

NV5
NV5 ENGINEERS & CONSULTANTS, INC.
3300 REGENCY PARKWAY, SUITE 100
CARY, NC 27518
P: 919.851.1912 www.NV5.com
NC License # F-1333
formerly CALYX Engineers & Consultants

PROJECT REFERENCE NO.	SHEET NO.
B-6001	UC-5

UTILITY DESIGN ENGINEER

NORTH CAROLINA PROFESSIONAL SEAL 022785 ENGINEER PATRICK C. PEREZ

7/1/2021

DOCUMENT NOT CONSIDERED FINAL UNLESS ALL SIGNATURES COMPLETED

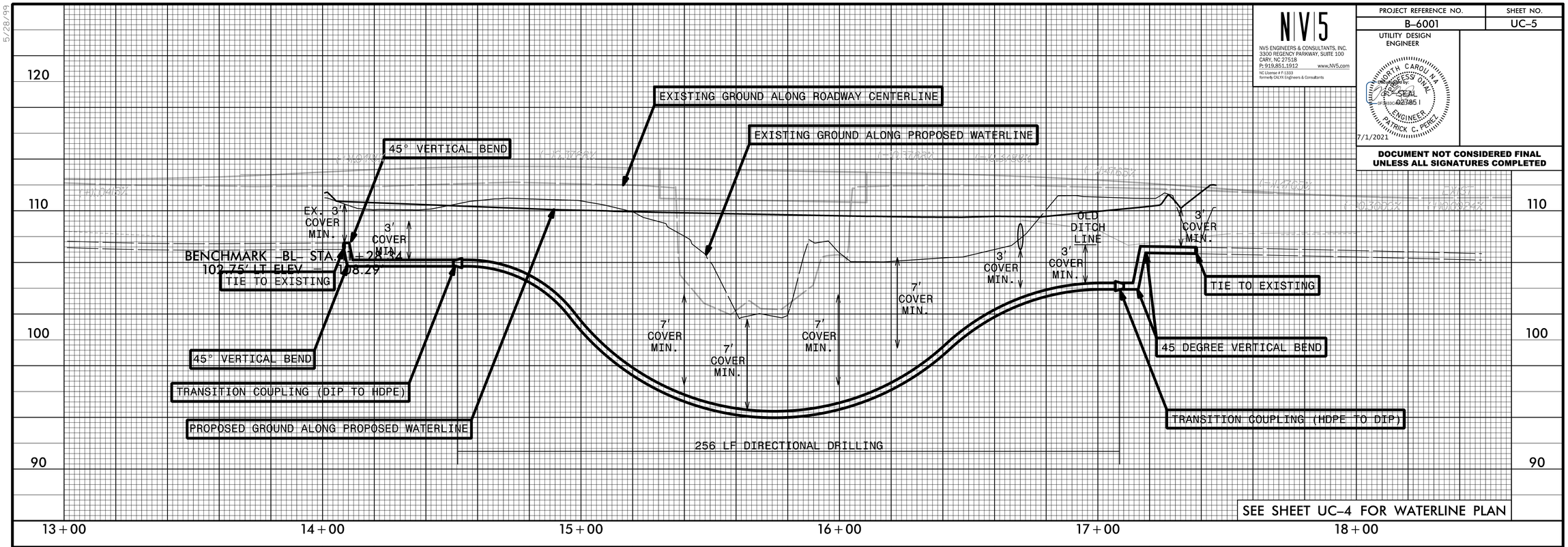

SEE SHEET UC-4 FOR WATERLINE PLAN

5/28/99
6/30/2021
6:32:04 PM
S:\2016\2016032.19\LDV\Design\Plots\UC-5.dgn

DocuSign Envelope ID: FE584E6F-C9DA-48A2-A14A-7A0A0AE30F04

6/23/16

0 2.5 5	PROJ. REFERENCE NO.	SHEET NO.
	B-6001	X-1

NV5

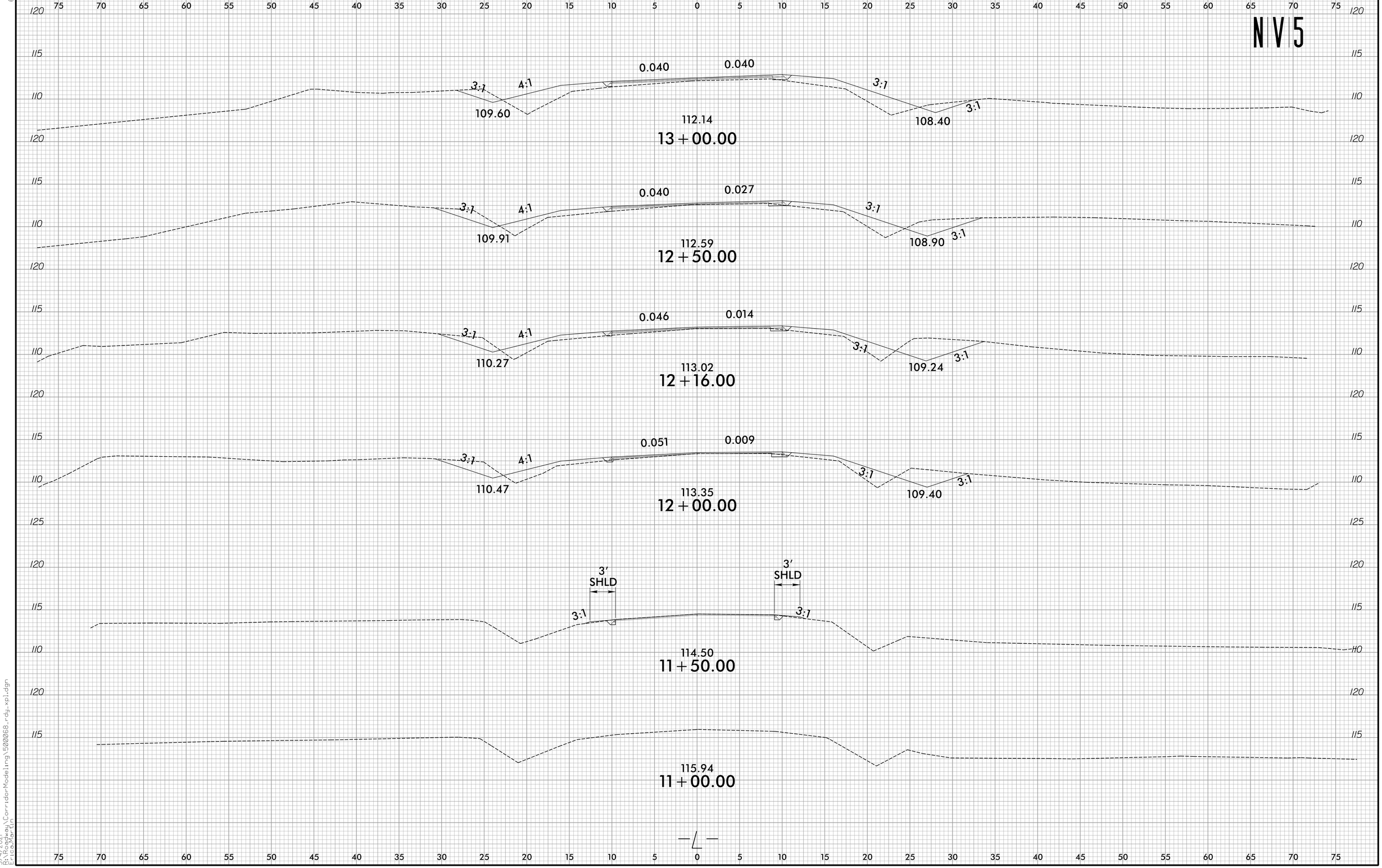

3/4/2021
B:\Roadway\CorridorModeling\500268_rdy_xpl.dgn
EricaMartin

DocuSign Envelope ID: FE584E6F-C9DA-48A2-A14A-7A0A0AE30F04

6/23/16

0 2.5 5	PROJ. REFERENCE NO.	SHEET NO.
	B-6001	X-2

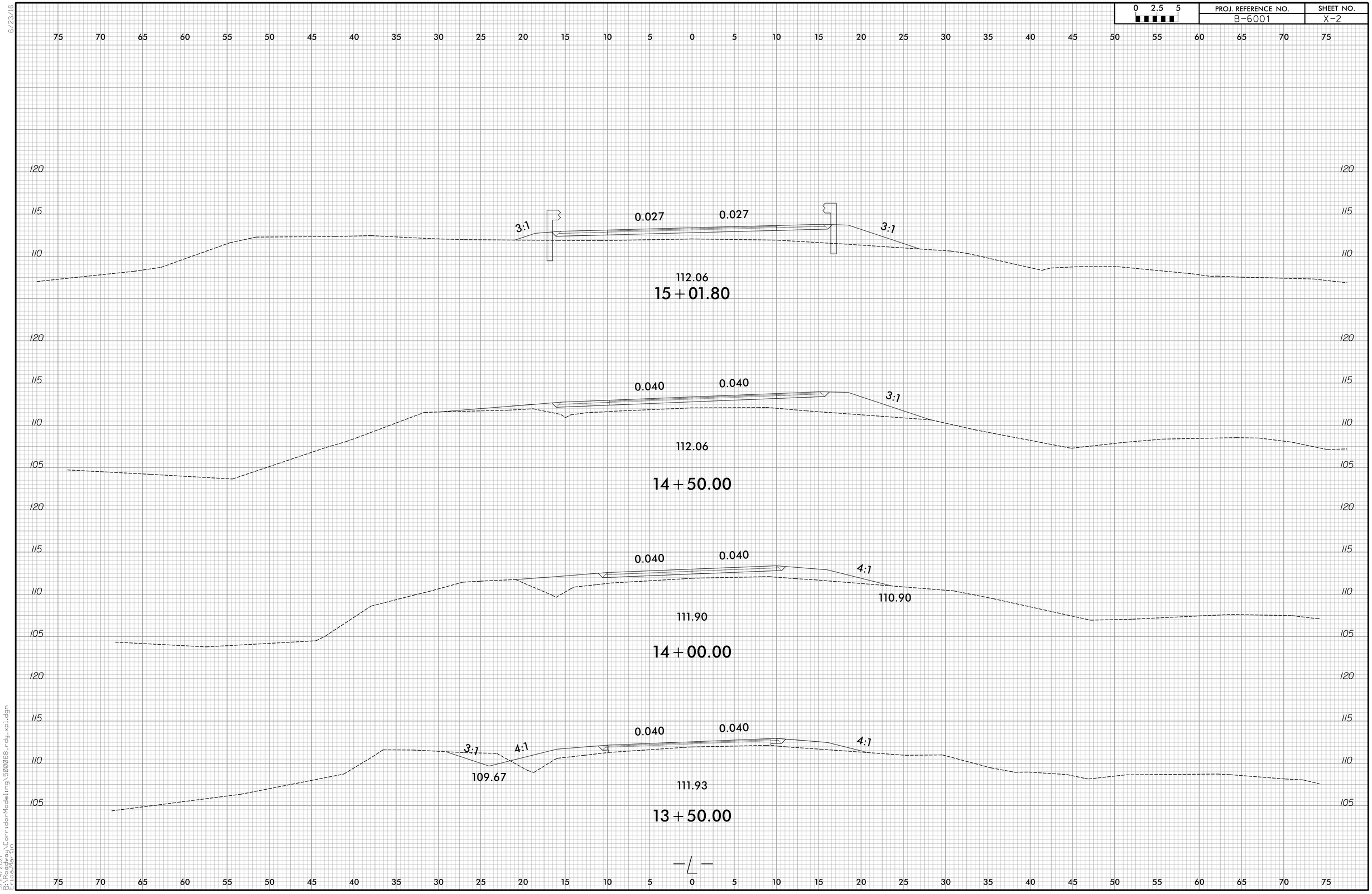

5/24/2021
R:\Roadway\Corridor\Modeling\500068_rdy_xpl.dgn
EricaMartin

DocuSign Envelope ID: FE584E6F-C9DA-48A2-A14A-7A0A0AE30F04

0 2.5 5	PROJ. REFERENCE NO.	SHEET NO.
	B-6001	X-3

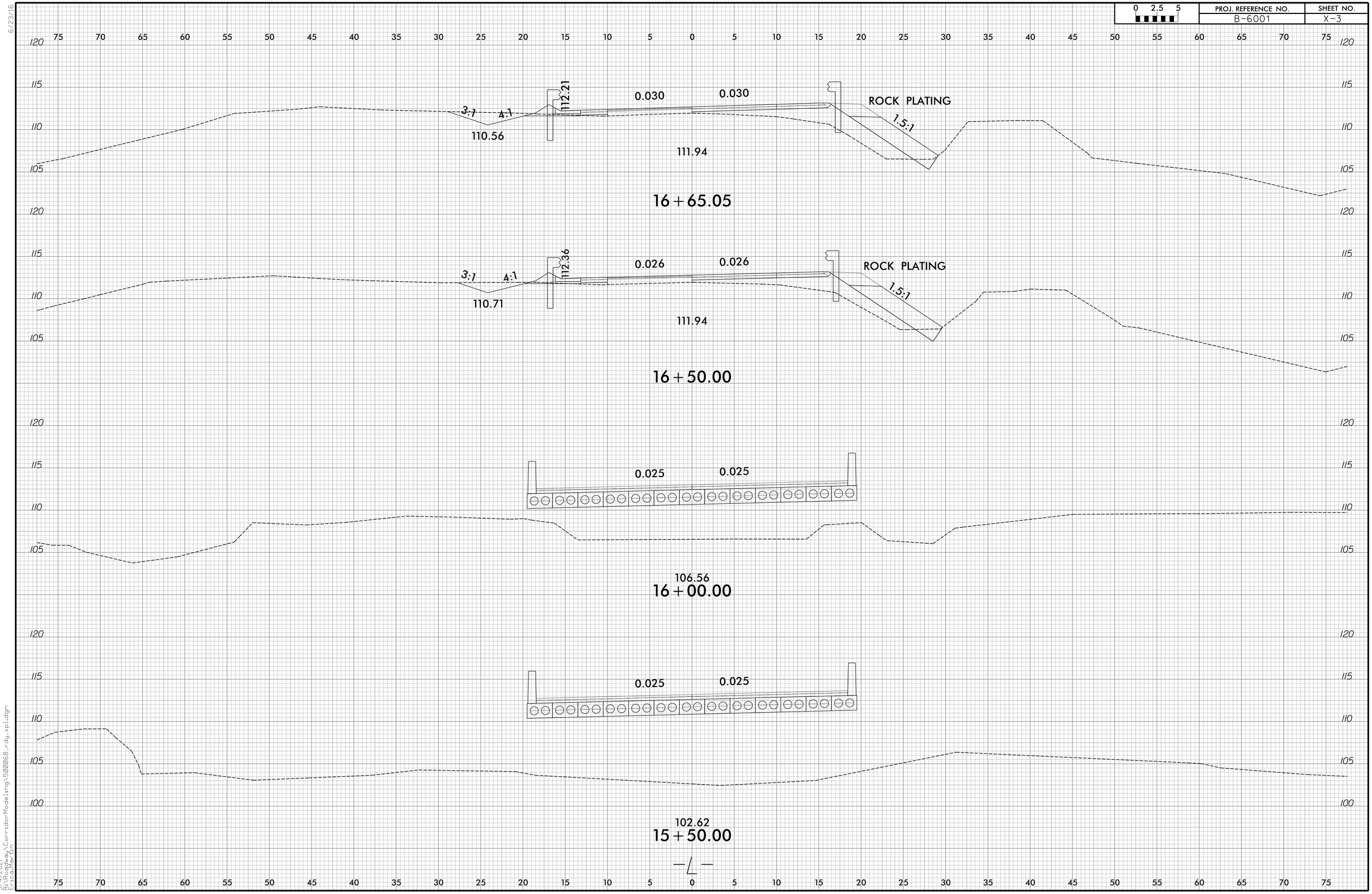

6/23/16
3/4/2021
B:\Roadway\CorridorModeling\500268_rdy_xpl.dgn
EricaMartin

DocuSign Envelope ID: FE584E6F-C9DA-48A2-A14A-7A0A0AE30F04

6/23/16

0 2.5 5	PROJ. REFERENCE NO.	SHEET NO.
	B-6001	X-4

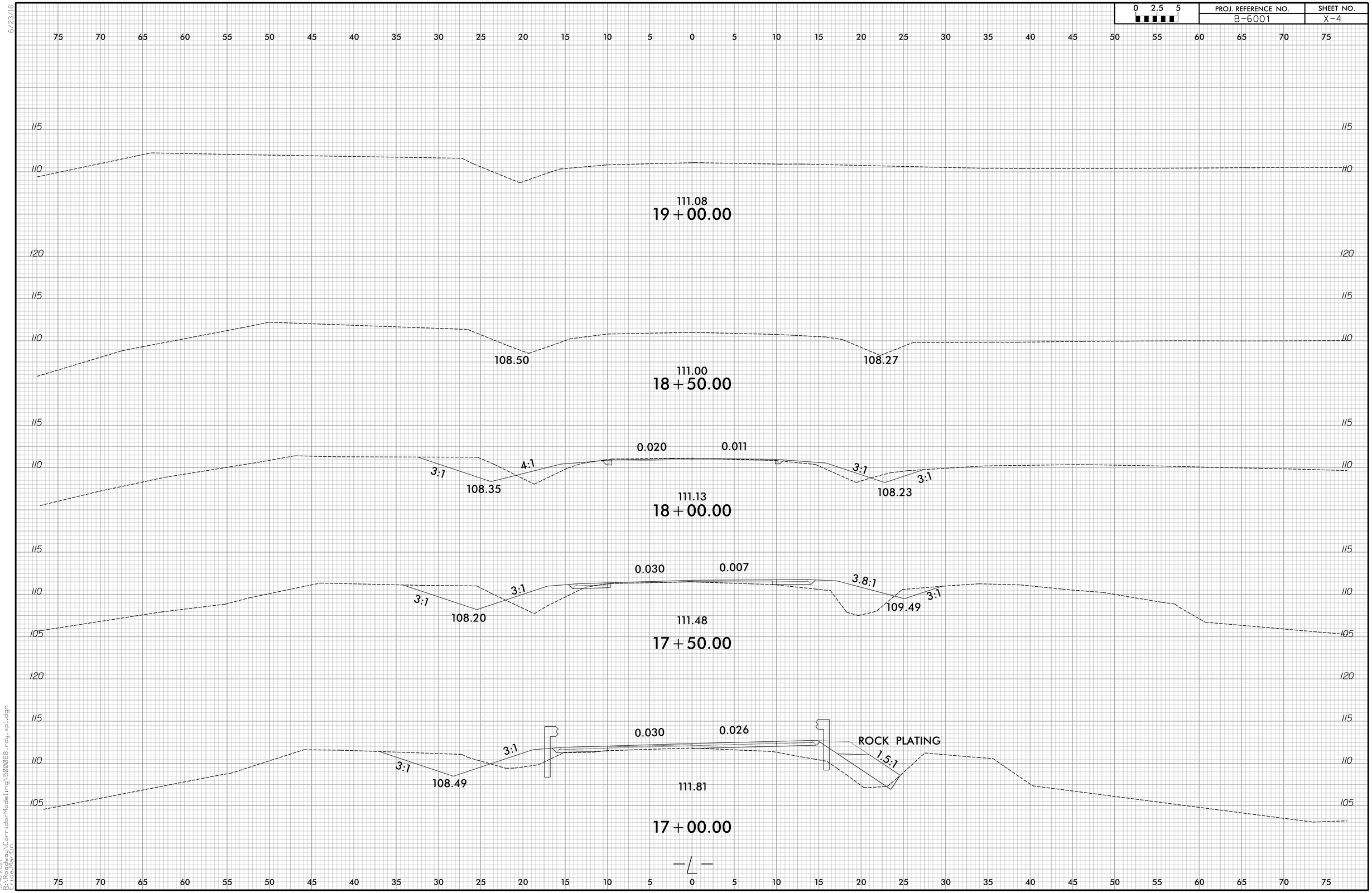

3/4/2021
B:\Roadway\CorridorModeling\500268_rdy_xpl.dgn
EricaMartin

DocuSign Envelope ID: FE584E6F-C9DA-48A2-A14A-7A0A0AE30F04

F. A. PROJECT NO.: BRZ-1153(009)

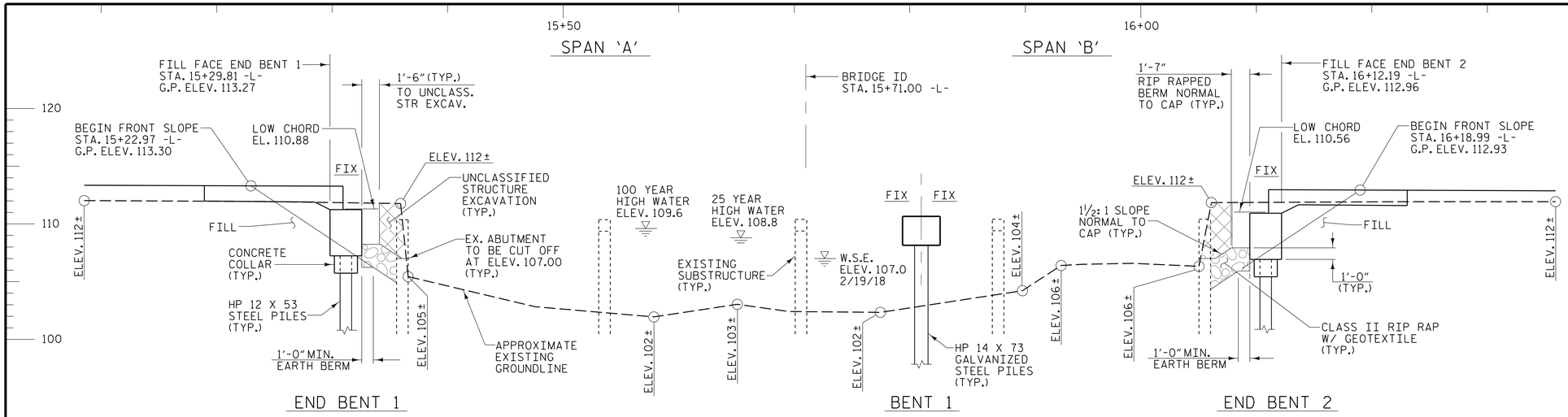

SECTION ALONG -L-

PI = 14+55.00	PI = 16+80.00
EL = 113.56'	EL = 112.70'
VC = 100'	VC = 100'
(+)1.0418% (-)0.3788%	(-)0.3788% (-)1.4765%

GRADE DATA
-L- (SR 1153)

HYDRAULIC DATA:

DESIGN DISCHARGE -	900 CFS
FREQUENCY OF DESIGN FLOOD -	25 YEAR
DESIGN HIGH WATER ELEVATION -	108.8
DRAINAGE AREA -	8.6 SQ. MI.
BASE DISCHARGE (Q 100) -	1360 CFS
BASE HIGH WATER ELEVATION -	109.6

OVERTOPPING DATA:

OVERTOPPING DISCHARGE -	4800 CFS
FREQUENCY OF OVERTOPPING-	>500 YEAR
OVERTOPPING FLOOD ELEVATION -	111.0

OVERTOPPING EXCEEDS 500 YEAR FLOOD EVENT.
LOW POINT OF ROADWAY OVERTOPPING
PROFILE OCCURS AT -L- STA. 18+50±

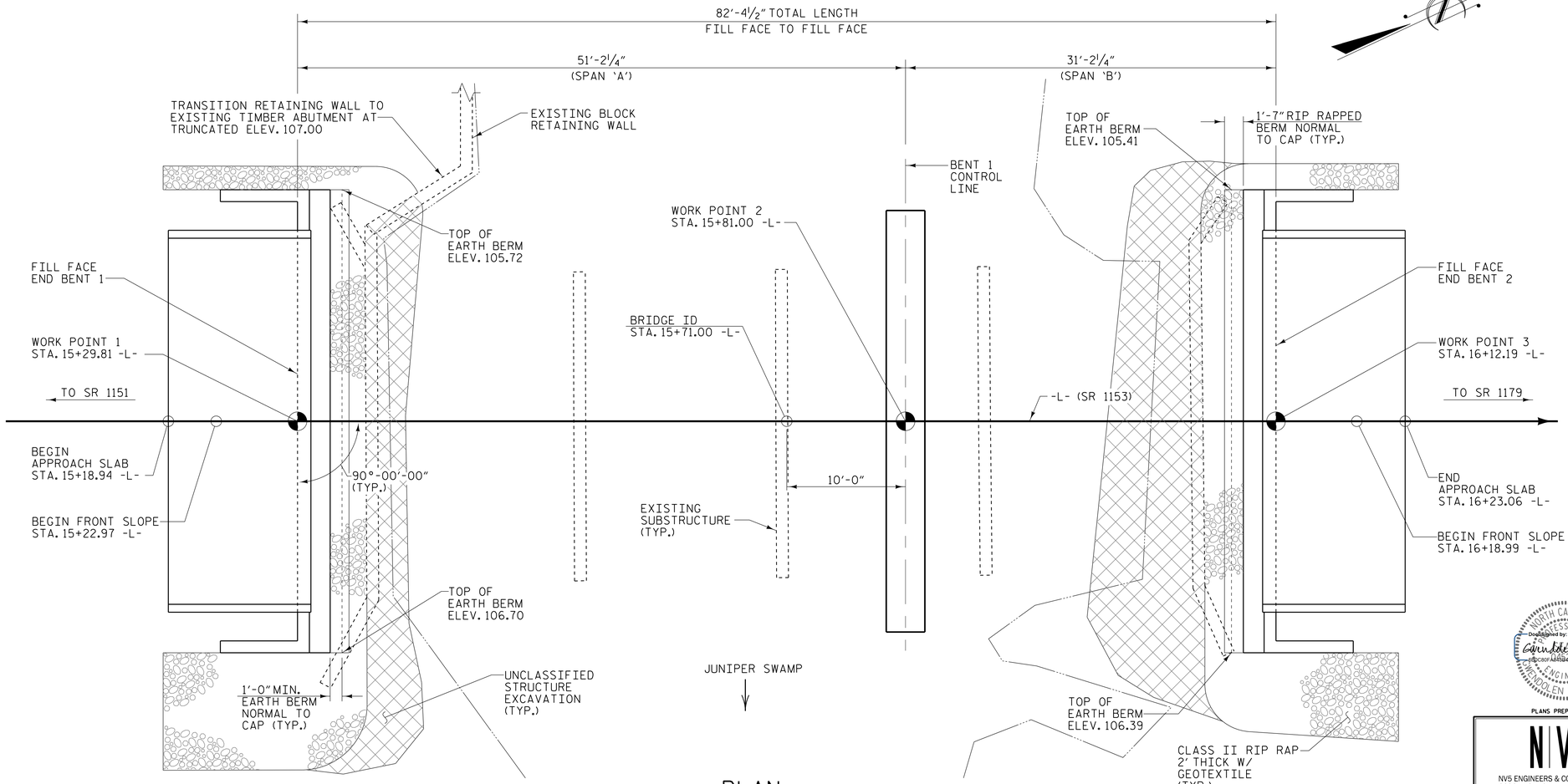

PLAN

PILES NOT SHOWN FOR CLARITY

I HEREBY CERTIFY THESE PLANS
ARE THE AS-BUILT PLANS

PROJECT NO. B-6001
JOHNSTON COUNTY
STATION: 15+71.00 -L-

SHEET 1 OF 2 REPLACES BRIDGE NO. 68

NORTH CAROLINA PROFESSIONAL ENGINEER SEAL 046342 GARY FRANKLIN WILSON
DocuSigned by: Gary Franklin Wilson
6/2/2021

PLANS PREPARED BY:
NV5 ENGINEERS & CONSULTANTS, INC.
3300 REGENCY PARKWAY, SUITE 100
CARY, NC 27518
P: 919.851.1912 www.NV5.com
NC License # F-1333
formerly CALYX Engineers & Consultants

DOCUMENT NOT CONSIDERED FINAL
UNLESS ALL SIGNATURES COMPLETED

STATE OF NORTH CAROLINA
DEPARTMENT OF TRANSPORTATION
RALEIGH

GENERAL DRAWING
BRIDGE ON SR 1153
OVER JUNIPER SWAMP
BETWEEN SR 1151 & SR 1179

30'-10" CLEAR ROADWAY - 90° SKEW

REVISIONS							SHEET NO.
NO.	BY:	DATE:	NO.	BY:	DATE:		S-1
1			3				TOTAL SHEETS
2			4				18

DRAWN BY :	W. B. ALLEN	DATE :	12/18
CHECKED BY :	G. F. WILSON	DATE :	1/19
DESIGN ENGINEER OF RECORD:	G. F. WILSON	DATE :	5/21

4/26/2021 10:01:14 AM R:\Structures\B6001_SMU_GDL500068.dgn

DocuSign Envelope ID: FE584E6F-C9DA-48A2-A14A-7A0A0AE30F04

BM #2 - TIE SPIKE SET IN 16" OAK TREE
106.65' RT. OF STA. 13+91.04 -L-
ELEV.= 108.29', N 602712 E 2183401

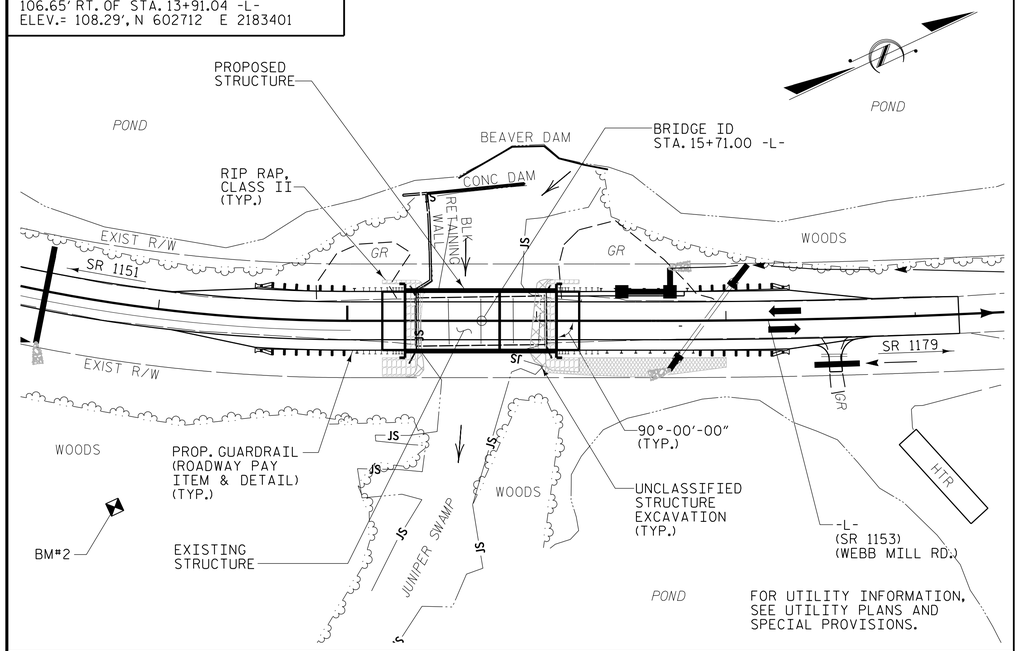

LOCATION SKETCH

NOTES

ASSUMED LIVE LOAD = HL-93 OR ALTERNATE LOADING.

THIS BRIDGE HAS BEEN DESIGNED IN ACCORDANCE WITH THE AASHTO LRFD BRIDGE DESIGN SPECIFICATIONS.

THIS BRIDGE IS LOCATED IN SEISMIC ZONE 1.

FOR EROSION CONTROL MEASURES SEE EROSION CONTROL PLANS.

FOR OTHER DESIGN DATA AND GENERAL NOTES, SEE SHEET SN.

REMOVAL OF THE EXISTING BRIDGE SHALL BE PERFORMED SO AS NOT TO ALLOW DEBRIS TO FALL INTO THE WATER. THE CONTRACTOR SHALL REMOVE THE BRIDGE AND SUBMIT PLANS FOR THE DEMOLITION IN ACCORDANCE WITH ARTICLE 402-2 OF THE STANDARD SPECIFICATIONS.

THE MATERIAL SHOWN ON SHEET 1 OF 2 IN THE CROSS-HATCHED AREA SHALL BE EXCAVATED FOR A MAX. DISTANCE OF 19 FT. LT. AND 30 FT. RT. OF CENTERLINE ROADWAY AT END BENT 1 AND 22 FT. LT. AND 25 FT. RT. OF CENTERLINE ROADWAY AT END BENT 2 AS DIRECTED BY THE ENGINEER. THIS WORK WILL BE PAID FOR AT THE LUMP SUM PRICE FOR UNCLASSIFIED STRUCTURE EXCAVATION. SEE SECTION 412 OF THE STANDARD SPECIFICATIONS.

THE EXISTING STRUCTURE CONSISTING OF ONE 17'-8" SPAN, TWO 17'-0" SPANS AND ONE 17'-8" SPAN WITH A 24'-0" CLEAR ROADWAY WIDTH AND REINF. CONCRETE DECK ON TIMBER JOISTS SUPPORTED ON TIMBER CAPS & TIMBER PILES SHALL BE REMOVED. THE BRIDGE IS PRESENTLY POSTED FOR LOAD LIMIT.

THE SUBSTRUCTURE OF THE EXISTING BRIDGE INDICATED ON THE PLANS IS FROM THE BEST INFORMATION AVAILABLE. SINCE THIS INFORMATION IS SHOWN FOR THE CONVENIENCE OF THE CONTRACTOR, THE CONTRACTOR SHALL HAVE NO CLAIM WHATSOEVER AGAINST THE DEPARTMENT OF TRANSPORTATION FOR ANY DELAYS OR ADDITIONAL COST INCURRED BASED ON DIFFERENCES BETWEEN THE EXISTING BRIDGE SUBSTRUCTURE SHOWN ON THE PLANS AND THE ACTUAL CONDITIONS AT THE PROJECT SITE.

IF EXISTING TIMBER PILES AT THE INTERIOR BENT CANNOT BE REMOVED, THEY MAY BE CUT-OFF AT THE MUDLINE.

THIS STRUCTURE HAS BEEN DESIGNED IN ACCORDANCE WITH HEC 18, "EVALUATING SCOUR AT BRIDGES".

FOR ASBESTOS ASSESSMENT FOR BRIDGE DEMOLITION AND RENOVATIONS ACTIVITIES, SEE SPECIAL PROVISIONS.

THE CONTRACTOR SHALL PROVIDE INDEPENDENT ASSURANCE SAMPLES OF REINFORCING STEEL AS FOLLOWS: FOR PROJECTS REQUIRING UP TO 400 TONS OF REINFORCING STEEL, ONE 30 INCH SAMPLE OF EACH SIZE BAR USED, AND FOR PROJECTS REQUIRING OVER 400 TONS OF REINFORCING STEEL, TWO 30 INCH SAMPLES OF EACH SIZE BAR USED. THE SAMPLE BARS SHOULD COME FROM STEEL ACTUALLY USED IN THE PROJECT AND THE SAMPLE BARS SHOULD BE REPLACED BY SPLICED BARS AS SPECIFIED IN THE SAMPLE BAR REPLACEMENT CHART. PAYMENT FOR THE SAMPLE BARS AND REPLACEMENT REINFORCING STEEL SHALL BE CONSIDERED INCIDENTAL TO VARIOUS PAY ITEMS.

FOR SUBMITTAL OF WORKING DRAWINGS, SEE SPECIAL PROVISIONS.

FOR FALSEWORK AND FORMWORK, SEE SPECIAL PROVISIONS.

FOR CRANE SAFETY, SEE SPECIAL PROVISIONS.

FOR GROUT FOR STRUCTURES, SEE SPECIAL PROVISIONS.

NO DECK DRAINS REQUIRED.

ASPHALT WEARING SURFACE IS INCLUDED IN ROADWAY QUANTITIES ON ROADWAY PLANS.

FOUNDATION NOTES

FOR PILES, SEE SECTION 450 OF THE STANDARD SPECIFICATIONS.

PILES AT END BENT NO. 1 ARE DESIGNED FOR A FACTORED RESISTANCE OF 67 TONS PER PILE.

PILES AT BENT NO. 1 ARE DESIGNED FOR A FACTORED RESISTANCE OF 88 TONS PER PILE.

PILES AT END BENT NO. 2 ARE DESIGNED FOR A FACTORED RESISTANCE OF 51 TONS PER PILE.

DRIVE PILES AT END BENT NO. 1 TO A RESISTANCE OF 115 TONS PER PILE.

DRIVE PILES AT BENT NO. 1 TO A REQUIRED DRIVING RESISTANCE OF 160 TONS PER PILE. THIS REQUIRED DRIVING RESISTANCE INCLUDES ADDITIONAL RESISTANCE FOR SCOUR.

DRIVE PILES AT END BENT NO. 2 TO A REQUIRED DRIVING RESISTANCE OF 85 TONS PER PILE.

INSTALL PILES AT BENT NO. 1 TO A TIP ELEVATION NO HIGHER THAN 74.0 FT.

THE SCOUR CRITCAL ELEVATION FOR BENT NO. 1 IS ELEVATION 92.0 FT. SCOUR CRITICAL ELEVATIONS ARE USED TO MONITOR POSSIBLE SCOUR PROBLEMS DURING THE LIFE OF THE STRUCTURE.

TESTING PILES WITH PDA DURING DRIVING, RESTRIKING OR REDRIVING MAY BE REQUIRED. THE ENGINEER WILL DETERMINE THE NEED FOR PDA TESTING. FOR PDA TESTING, SEE SECTION 450 OF THE STANDARD SPECIFICATIONS.

SAMPLE BAR REPLACEMENT

SIZE	LENGTH
#3	6'-2"
#4	7'-4"
#5	8'-6"
#6	9'-8"
#7	10'-10"
#8	12'-0"
#9	13'-2"
#10	14'-6"
#11	15'-10"

NOTE:
SAMPLE BAR REPLACEMENT LENGTHS BASED ON 30" (SAMPLE LENGTH) PLUS TWO SPLICE LENGTHS AND f_y = 60ksi.

TOTAL BILL OF MATERIAL

	REMOVAL OF EXISTING STRUCTURE	ASBESTOS ASSESSMENT	PDA TESTING	UNCLASSIFIED STRUCTURE EXCAVATION	CLASS A CONCRETE	BRIDGE APPROACH SLABS	REINFORCING STEEL	PILE DRIVING EQUIPMENT SETUP FOR HP 12 X 53 STEEL PILES	PILE DRIVING EQUIPMENT SETUP FOR HP 14 X 73 GALVANIZED STEEL PILES	HP 12 X 53 STEEL PILES		HP 14 X 73 GALVANIZED STEEL PILES		PILE REDRIVES	VERTICAL CONCRETE BARRIER RAIL	RIP RAP CLASS II (2'-0" THICK)	GEOTEXTILE FOR DRAINAGE	ELASTOMERIC BEARINGS	3'-0" X 1'-9" PRESTRESSED CONCRETE CORED SLABS	
	LUMP SUM	LUMP SUM	EACH	LUMP SUM	CU. YARDS	LUMP SUM	LBS.	EACH	EACH	NO.	LIN. FT.	NO.	LIN. FT.	EACH	LIN. FT.	TONS	SQ. YARDS	LUMP SUM	NO.	LIN. FT.
SUPERSTRUCTURE		LUMP SUM				LUMP SUM									160.50			LUMP SUM	22	880.00
END BENT 1				LUMP SUM	21.6		2636	7		7	350			4		40	45			
BENT 1					10.7		2136		8			8	440	4						
END BENT 2					21.6		2636	7		7	350			4		35	40			
TOTAL	LUMP SUM	LUMP SUM	1	LUMP SUM	53.9	LUMP SUM	7408	14	8	14	700	8	440	12	160.50	75	85	LUMP SUM	22	880.00

PROJECT NO. B-6001
JOHNSTON COUNTY
STATION: 15+71.00 -L-

SHEET 2 OF 2

STATE OF NORTH CAROLINA
DEPARTMENT OF TRANSPORTATION
RALEIGH

GENERAL DRAWING

BRIDGE ON SR 1153
OVER JUNIPER SWAMP
BETWEEN SR 1151 & SR 1179

30'-10" CLEAR ROADWAY - 90° SKEW

NORTH CAROLINA PROFESSIONAL ENGINEER SEAL 019641 GWENDOLEN F. WILSON
DocuSigned by: Gwendolen Wilson
6/2/2021

DOCUMENT NOT CONSIDERED FINAL UNLESS ALL SIGNATURES COMPLETED

PLANS PREPARED BY:
NV5 ENGINEERS & CONSULTANTS, INC.
3300 REGENCY PARKWAY, SUITE 100
CARY, NC 27518
P: 919.851.1912 www.NV5.com
NC License # F-1333
formerly CALYX Engineers & Consultants

REVISIONS						SHEET NO.
NO.	BY:	DATE:	NO.	BY:	DATE:	S-2
1			3			TOTAL SHEETS
2			4			18

DRAWN BY : W. B. ALLEN DATE : 1/19
CHECKED BY : G. F. WILSON DATE : 1/19
DESIGN ENGINEER OF RECORD: G. F. WILSON DATE : 5/21

4/26/2021 10:16:16 AM R:\Structures\B6001_SMU_G02_S00068.dgn

DocuSign Envelope ID: FE584E6F-C9DA-48A2-A14A-7A0A0AE30F04

LOAD AND RESISTANCE FACTOR RATING (LRFD) SUMMARY FOR PRESTRESSED CONCRETE GIRDERS

LEVEL		VEHICLE	WEIGHT (W) (TONS)	CONTROLLING LOAD RATING	MINIMUM RATING FACTORS (RF)	TONS = W X RF	STRENGTH I LIMIT STATE											SERVICE III LIMIT STATE						COMMENT NUMBER
								MOMENT					SHEAR						MOMENT					
							LIVELOAD FACTORS	DISTRIBUTION FACTORS (DF)	RATING FACTOR	SPAN	GIRDER LOCATION	DISTANCE FROM LEFT END OF SPAN (ft)	DISTRIBUTION FACTORS (DF)	RATING FACTOR	SPAN	GIRDER LOCATION	DISTANCE FROM LEFT END OF SPAN (ft)	LIVELOAD FACTORS	DISTRIBUTION FACTORS (DF)	RATING FACTOR	SPAN	GIRDER LOCATION	DISTANCE FROM LEFT END OF SPAN (ft)	
DESIGN LOAD RATING		HL-93(Inv)	N/A	**1**	1.394	--	1.75	0.276	1.57	50'	EL	24.5	0.531	**1.39**	50'	EL	**2.45**	0.80	0.276	1.44	50'	EL	24.5	
		HL-93(Opr)	N/A	--	1.807	--	1.35	0.276	2.03	50'	EL	24.5	0.531	1.81	50'	EL	2.45	N/A	--	--	--	--	--	
		HS-20(Inv)	36.000	**2**	1.667	60.007	1.75	0.276	1.95	50'	EL	24.5	0.531	**1.67**	50'	EL	**2.45**	0.80	0.276	1.79	50'	EL	24.5	
		HS-20(Opr)	36.000	--	2.161	77.787	1.35	0.276	2.52	50'	EL	24.5	0.531	2.16	50'	EL	2.45	N/A	--	--	--	--	--	
LEGAL LOAD RATING	SV	SNSH	13.500	--	3.635	49.079	1.4	0.276	4.95	50'	EL	24.5	0.531	4.7	50'	EL	2.45	0.80	0.276	3.64	50'	EL	24.5	
		SNGARBS2	20.000	--	2.871	57.42	1.4	0.276	3.91	50'	EL	24.5	0.531	3.42	50'	EL	2.45	0.80	0.276	2.87	50'	EL	24.5	
		SNAGRIS2	22.000	--	2.778	61.109	1.4	0.276	3.78	50'	EL	19.6	0.531	3.21	50'	EL	2.45	0.80	0.276	2.78	50'	EL	24.5	
		SNCOTTS3	27.250	--	1.814	49.418	1.4	0.276	2.47	50'	EL	24.5	0.531	2.36	50'	EL	2.45	0.80	0.276	1.81	50'	EL	24.5	
		SNAGGRS4	34.925	--	1.577	55.063	1.4	0.276	2.15	50'	EL	24.5	0.531	2.01	50'	EL	2.45	0.80	0.276	1.58	50'	EL	24.5	
		SNS5A	35.550	--	1.537	54.657	1.4	0.276	2.09	50'	EL	24.5	0.531	2.07	50'	EL	2.45	0.80	0.276	1.54	50'	EL	24.5	
		SNS6A	39.950	--	1.438	57.43	1.4	0.276	1.96	50'	EL	24.5	0.531	1.91	50'	EL	2.45	0.80	0.276	1.44	50'	EL	24.5	
		SNS7B	42.000	--	1.370	57.54	1.4	0.276	1.87	50'	EL	24.5	0.531	1.91	50'	EL	2.45	0.80	0.276	1.37	50'	EL	24.5	
	TTST	TNAGRIT3	33.000	--	1.761	58.118	1.4	0.276	2.4	50'	EL	24.5	0.531	2.25	50'	EL	2.45	0.80	0.276	1.76	50'	EL	24.5	
		TNT4A	33.075	--	1.777	58.759	1.4	0.276	2.42	50'	EL	24.5	0.531	2.17	50'	EL	2.45	0.80	0.276	1.78	50'	EL	24.5	
		TNT6A	41.600	--	1.480	61.558	1.4	0.276	2.01	50'	EL	24.5	0.531	2.08	50'	EL	2.45	0.80	0.276	1.48	50'	EL	24.5	
		TNT7A	42.000	--	1.502	63.087	1.4	0.276	2.05	50'	EL	24.5	0.531	1.94	50'	EL	2.45	0.80	0.276	1.50	50'	EL	24.5	
		TNT7B	42.000	--	1.566	65.773	1.4	0.276	2.13	50'	EL	24.5	0.531	1.84	50'	EL	2.45	0.80	0.276	1.57	50'	EL	24.5	
		TNAGRIT4	43.000	--	1.486	63.902	1.4	0.276	2.02	50'	EL	24.5	0.531	1.77	50'	EL	2.45	0.80	0.276	1.49	50'	EL	24.5	
		TNAGT5A	45.000	--	1.388	62.47	1.4	0.276	1.89	50'	EL	24.5	0.531	1.8	50'	EL	2.45	0.80	0.276	1.39	50'	EL	24.5	
		TNAGT5B	45.000	**3**	1.360	61.206	1.4	0.276	1.85	50'	EL	24.5	0.531	1.68	50'	EL	2.45	0.80	0.276	**1.36**	50'	EL	**24.5**	

LOAD FACTORS:

DESIGN LOAD RATING FACTORS	LIMIT STATE	γ_{DC}	γ_{DW}
	STRENGTH I	1.25	1.50
	SERVICE III	1.00	1.00

NOTES:

MINIMUM RATING FACTORS ARE BASED ON THE STRENGTH I AND SERVICE III LIMIT STATES.

ALLOWABLE STRESSES FOR SERVICE III LIMIT STATE ARE AS REQUIRED FOR DESIGN.

COMMENTS:

1.
2.
3.
4.

(#) CONTROLLING LOAD RATING

(1) DESIGN LOAD RATING (HL-93)

(2) DESIGN LOAD RATING (HS-20)

(3) LEGAL LOAD RATING **

** SEE CHART FOR VEHICLE TYPE

GIRDER LOCATION

I - INTERIOR GIRDER
EL - EXTERIOR LEFT GIRDER
ER - EXTERIOR RIGHT GIRDER

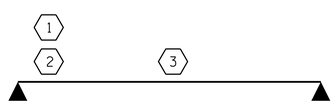

LRFR SUMMARY

FOR SPAN 'A'

PROJECT NO. B-6001

JOHNSTON COUNTY

STATION: 15+71.00 -L-

PLANS PREPARED BY:

NV5 ENGINEERS & CONSULTANTS, INC.
3300 REGENCY PARKWAY, SUITE 100
CARY, NC 27518
P: 919.851.1912 www.NV5.com
NC License # F-1333
formerly CALYX Engineers & Consultants

DOCUMENT NOT CONSIDERED FINAL UNLESS ALL SIGNATURES COMPLETED

THIS STANDARD DRAWING REVIEWED & ADOPTED FOR USE AT THE REFERENCED LOCATION BY THE UNDERSIGNED:

NORTH CAROLINA PROFESSIONAL SEAL 045282 ENGINEER GWENDOLEN F. WILSON

DocuSigned by: Gwendolen Wilson
DEC8C0A8B4B282

6/2/2021

STATE OF NORTH CAROLINA
DEPARTMENT OF TRANSPORTATION
RALEIGH

STANDARD

LRFR SUMMARY FOR 50' CORED SLAB UNIT 90° SKEW
(NON-INTERSTATE TRAFFIC)

REVISIONS						SHEET NO.
NO.	BY:	DATE:	NO.	BY:	DATE:	S-3
1			3			TOTAL SHEETS
2			4			18

ASSEMBLED BY :	W. B. ALLEN	DATE :	12/18
CHECKED BY :	G. F. WILSON	DATE :	4/19
DRAWN BY : CVC	6/10		
CHECKED BY : DNS	6/10		

4/26/2021 10:17 AM R:\Structures\B6001_SMU_G03_500068.dgn

STD. NO. 21LRFR1_90S_50L

DocuSign Envelope ID: FE584E6F-C9DA-48A2-A14A-7A0A0AE30F04

LOAD AND RESISTANCE FACTOR RATING (LRFD) SUMMARY FOR PRESTRESSED CONCRETE GIRDERS

LEVEL		VEHICLE	WEIGHT (W) (TONS)	CONTROLLING LOAD RATING	MINIMUM RATING FACTORS (RF)	TONS = W X RF	STRENGTH I LIMIT STATE											SERVICE III LIMIT STATE						COMMENT NUMBER
								MOMENT					SHEAR						MOMENT					
							LIVELOAD FACTORS	DISTRIBUTION FACTORS (DF)	RATING FACTOR	SPAN	GIRDER LOCATION	DISTANCE FROM LEFT END OF SPAN (ft)	DISTRIBUTION FACTORS (DF)	RATING FACTOR	SPAN	GIRDER LOCATION	DISTANCE FROM LEFT END OF SPAN (ft)	LIVELOAD FACTORS	DISTRIBUTION FACTORS (DF)	RATING FACTOR	SPAN	GIRDER LOCATION	DISTANCE FROM LEFT END OF SPAN (ft)	
DESIGN LOAD RATING		HL-93(Inv)	N/A	**1**	1.037	--	1.75	0.283	1.83	30'	EL	14.5	0.574	**1.04**	30'	EL	**1.45**	0.80	0.283	1.58	30'	EL	14.5	
		HL-93(Opr)	N/A	--	1.344	--	1.35	0.283	2.38	30'	EL	14.5	0.574	1.34	30'	EL	1.45	N/A	--	--	--	--	--	
		HS-20(Inv)	36.000	**2**	1.183	42.587	1.75	0.283	2.53	30'	EL	11.6	0.574	**1.18**	30'	EL	**1.45**	0.80	0.283	2.20	30'	EL	11.6	
		HS-20(Opr)	36.000	--	1.533	55.205	1.35	0.283	3.28	30'	EL	11.6	0.574	1.53	30'	EL	1.45	N/A	--	--	--	--	--	
LEGAL LOAD RATING	SV	SNSH	13.500	--	2.895	39.081	1.4	0.283	5.18	30'	EL	14.5	0.574	2.89	30'	EL	1.45	0.80	0.283	3.56	30'	EL	14.5	
		SNGARBS2	20.000	--	2.240	44.792	1.4	0.283	4.53	30'	EL	11.6	0.574	2.24	30'	EL	1.45	0.80	0.283	3.15	30'	EL	11.6	
		SNAGRIS2	22.000	--	2.157	47.463	1.4	0.283	4.6	30'	EL	11.6	0.574	2.16	30'	EL	1.45	0.80	0.283	3.20	30'	EL	11.6	
		SNCOTTS3	27.250	--	1.462	39.849	1.4	0.283	2.6	30'	EL	14.5	0.574	1.46	30'	EL	1.45	0.80	0.283	1.79	30'	EL	14.5	
		SNAGGRS4	34.925	--	1.346	46.999	1.4	0.283	2.5	30'	EL	14.5	0.574	1.35	30'	EL	1.45	0.80	0.283	1.72	30'	EL	14.5	
		SNS5A	35.550	--	1.427	50.733	1.4	0.283	2.42	30'	EL	14.5	0.574	1.43	30'	EL	1.45	0.80	0.283	1.67	30'	EL	14.5	
		SNS6A	39.950	--	1.341	53.59	1.4	0.283	2.29	30'	EL	14.5	0.574	1.34	30'	EL	1.45	0.80	0.283	1.58	30'	EL	14.5	
		SNS7B	42.000	--	1.369	57.505	1.4	0.283	2.23	30'	EL	14.5	0.574	1.37	30'	EL	1.45	0.80	0.283	1.53	30'	EL	14.5	
	TTST	TNAGRIT3	33.000	--	1.593	52.58	1.4	0.283	2.97	30'	EL	14.5	0.574	1.59	30'	EL	1.45	0.80	0.283	2.04	30'	EL	14.5	
		TNT4A	33.075	--	1.483	49.043	1.4	0.283	2.82	30'	EL	14.5	0.574	1.48	30'	EL	1.45	0.80	0.283	1.94	30'	EL	14.5	
		TNT6A	41.600	--	1.433	59.622	1.4	0.283	2.56	30'	EL	14.5	0.574	1.43	30'	EL	1.45	0.80	0.283	1.76	30'	EL	14.5	
		TNT7A	42.000	--	1.363	57.264	1.4	0.283	2.64	30'	EL	14.5	0.574	1.36	30'	EL	1.45	0.80	0.283	1.82	30'	EL	14.5	
		TNT7B	42.000	--	1.331	55.915	1.4	0.283	2.49	30'	EL	14.5	0.574	1.33	30'	EL	1.45	0.80	0.283	1.72	30'	EL	14.5	
		TNAGRIT4	43.000	--	1.287	55.356	1.4	0.283	2.58	30'	EL	14.5	0.574	1.29	30'	EL	1.45	0.80	0.283	1.78	30'	EL	14.5	
		TNAGT5A	45.000	--	1.381	62.151	1.4	0.283	2.5	30'	EL	14.5	0.574	1.38	30'	EL	1.45	0.80	0.283	1.72	30'	EL	14.5	
		TNAGT5B	45.000	**3**	1.212	54.54	1.4	0.283	2.41	30'	EL	11.6	0.574	**1.21**	30'	EL	**1.45**	0.80	0.283	1.66	30'	EL	11.6	

LOAD FACTORS:

	LIMIT STATE	γ_{DC}	γ_{DW}
DESIGN LOAD RATING FACTORS	STRENGTH I	1.25	1.50
	SERVICE III	1.00	1.00

NOTES:

MINIMUM RATING FACTORS ARE BASED ON THE STRENGTH I AND SERVICE III LIMIT STATES.

ALLOWABLE STRESSES FOR SERVICE III LIMIT STATE ARE AS REQUIRED FOR DESIGN.

COMMENTS:

1.
2.
3.
4.

(#) CONTROLLING LOAD RATING

(1) DESIGN LOAD RATING (HL-93)

(2) DESIGN LOAD RATING (HS-20)

(3) LEGAL LOAD RATING ✱✱

✱✱ SEE CHART FOR VEHICLE TYPE

GIRDER LOCATION

I - INTERIOR GIRDER
EL - EXTERIOR LEFT GIRDER
ER - EXTERIOR RIGHT GIRDER

LRFR SUMMARY

FOR SPAN 'B'

PROJECT NO. B-6001

JOHNSTON COUNTY

STATION: 15+71.00 -L-

PLANS PREPARED BY:

NV5 ENGINEERS & CONSULTANTS, INC.
3300 REGENCY PARKWAY, SUITE 100
CARY, NC 27518
P: 919.851.1912 www.NV5.com
NC License # F-1333
formerly CALYX Engineers & Consultants

DOCUMENT NOT CONSIDERED FINAL UNLESS ALL SIGNATURES COMPLETED

THIS STANDARD DRAWING REVIEWED & ADOPTED FOR USE AT THE REFERENCED LOCATION BY THE UNDERSIGNED:

NORTH CAROLINA PROFESSIONAL SEAL 19342 ENGINEER GWENDOLEN F. WILSON

DocuSigned by: Gwendolen Wilson
E8C6C0F4D8B4C...
6/2/2021

STATE OF NORTH CAROLINA
DEPARTMENT OF TRANSPORTATION
RALEIGH

STANDARD
LRFR SUMMARY FOR 30' CORED SLAB UNIT 90° SKEW
(NON-INTERSTATE TRAFFIC)

REVISIONS						SHEET NO.
NO.	BY:	DATE:	NO.	BY:	DATE:	S-4
1			3			TOTAL SHEETS
2			4			18

ASSEMBLED BY :	W. B. ALLEN	DATE :	12/18
CHECKED BY :	G. F. WILSON	DATE :	4/19
DRAWN BY : CVC	6/10		
CHECKED BY : DNS	6/10		

STD. NO. 21LRFR1_90S_30L

4/26/2021 10:18 AM R:\Structures\B6001_SMU_G04_500068.dgn

DocuSign Envelope ID: FE584E6F-C9DA-48A2-A14A-7A0A0AE30F04

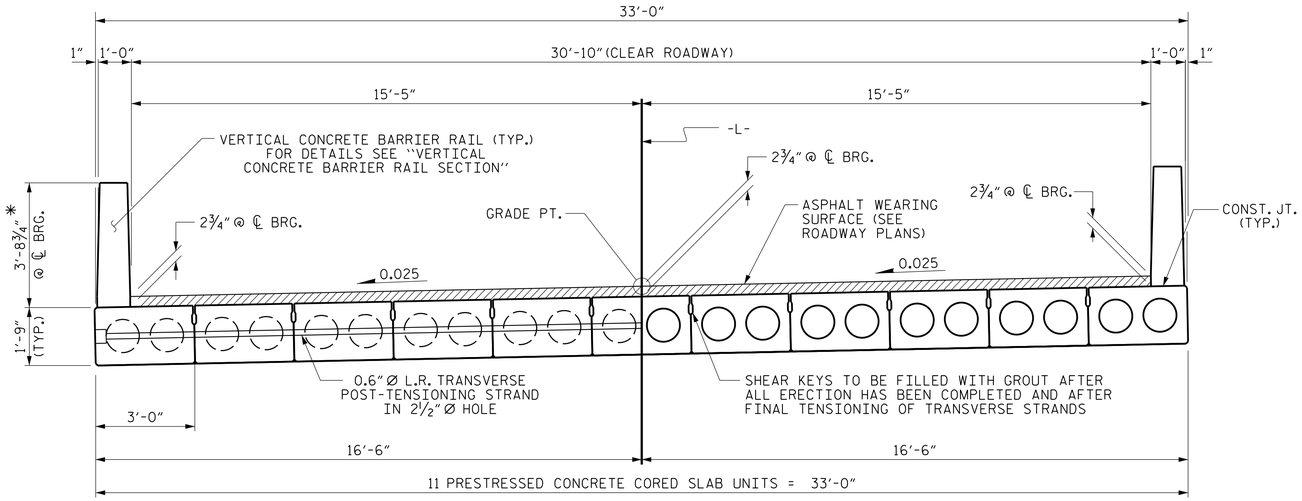

HALF SECTION
AT INTERMEDIATE DIAPHRAGMS

HALF SECTION
THROUGH VOIDS

TYPICAL SECTION

* - THE MAXIMUM BARRIER RAIL HEIGHT AND ASPHALT THICKNESS IS SHOWN. THE HEIGHT OF THE BARRIER RAIL AND ASPHALT THICKNESS VARIES WHILE THE TOP OF THE BARRIER RAIL FOLLOWS THE PROFILE OF THE GUTTERLINE. FOR RAIL HEIGHT DETAILS AND ASPHALT THICKNESS SEE THE "VERTICAL CONCRETE BARRIER RAIL SECTION" DETAIL.

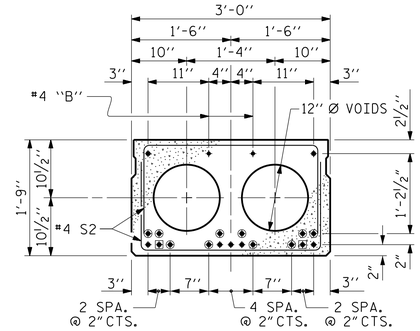

INTERIOR SLAB SECTION
(30' UNIT)
(9 STRANDS REQUIRED)

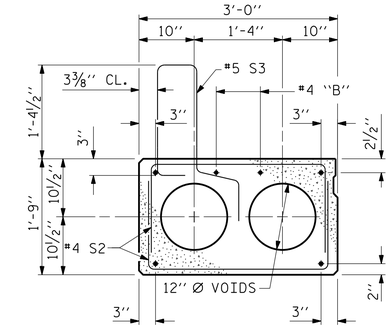

EXT. SLAB SECTION

(FOR PRESTRESSED STRAND LAYOUT, SEE INTERIOR SLAB SECTION.)

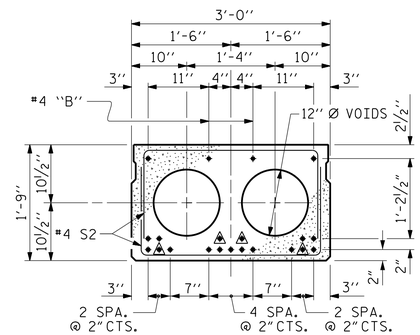

INTERIOR SLAB SECTION
(50' UNIT)
(19 STRANDS REQUIRED)

0.6" Ø LOW RELAXATION STRAND LAYOUT

- ◉ BOND SHALL BE BROKEN ON THESE STRANDS FOR A DISTANCE OF 6'-0" FROM END OF CORED SLAB UNIT. SEE STANDARD SPECIFICATIONS, ARTICLE 1078-7.
- ◉ BOND SHALL BE BROKEN ON THESE STRANDS FOR A DISTANCE OF 2'-0" FROM END OF CORED SLAB UNIT. SEE STANDARD SPECIFICATIONS, ARTICLE 1078-7.
- ◉ OPTIONAL FULL LENGTH DEBONDED STRANDS. THESE STRANDS ARE NOT REQUIRED. IF THE FABRICATOR CHOOSES TO INCLUDE THESE STRANDS IN THE CORED SLAB UNIT, THE STRANDS SHALL BE DEBONDED FOR THE FULL LENGTH OF THE UNIT AT NO ADDITIONAL COST. SEE STANDARD SPECIFICATIONS, ARTICLE 1078-7.

DEBONDING LEGEND

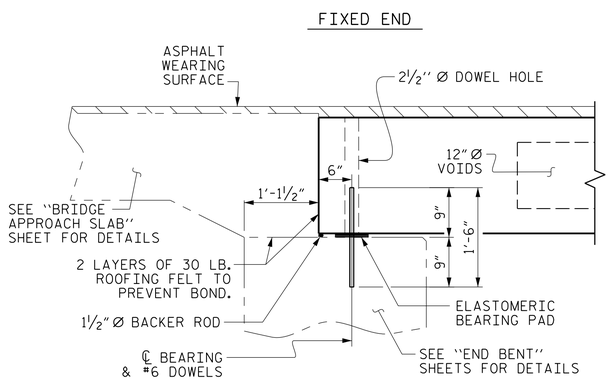

SECTION AT END BENT

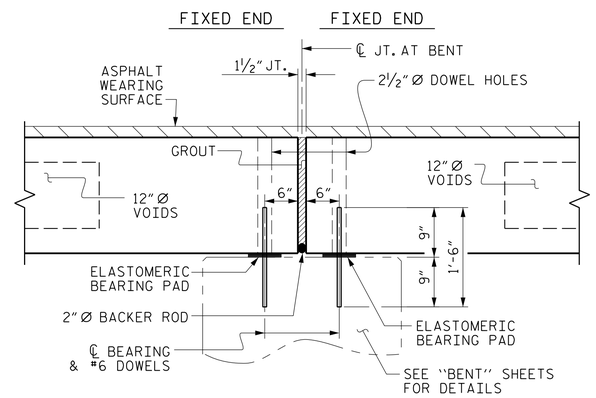

SECTION AT BENT

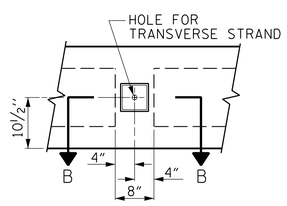

ELEVATION VIEW

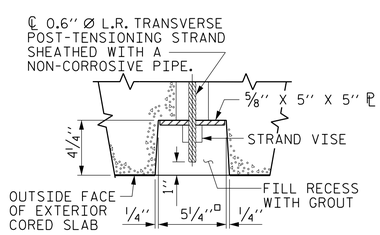

SECTION B-B

GROUTED RECESS AT END OF POST-TENSIONED STRAND OF CORED SLABS

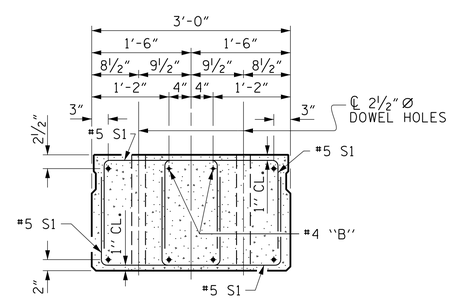

END ELEVATION

SHOWING PLACEMENT OF DOUBLE STIRRUPS AND LOCATION OF DOWEL HOLES. (STRAND LAYOUT NOT SHOWN.) INTERIOR SLAB UNIT SHOWN-EXTERIOR SLAB UNIT SIMILAR EXCEPT SHEAR KEY LOCATION.

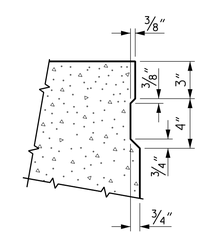

SHEAR KEY DETAIL

NOTE: OMIT SHEAR KEY ON OUTSIDE FACE OF EXTERIOR CORED SLABS.

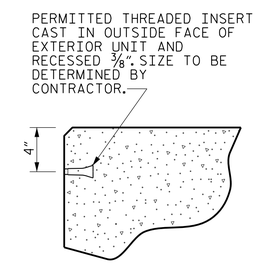

THREADED INSERT DETAIL

PROJECT NO. B-6001
JOHNSTON COUNTY
STATION: 15+71.00 -L-

SHEET 1 OF 4

STATE OF NORTH CAROLINA
DEPARTMENT OF TRANSPORTATION
RALEIGH

3'-0" X 1'-9" PRESTRESSED CONCRETE CORED SLAB UNIT

30'-10" CLEAR ROADWAY - 90° SKEW

NORTH CAROLINA PROFESSIONAL ENGINEER SEAL 026161 GARY FOLEN WILSON
Digitally signed by: Gary Folen Wilson
6/2/2021

PLANS PREPARED BY:
NV5 ENGINEERS & CONSULTANTS, INC.
3300 REGENCY PARKWAY, SUITE 100
CARY, NC 27518
P: 919.851.1912 www.NV5.com
NC License # F-1333
formerly CALYX Engineers & Consultants

DOCUMENT NOT CONSIDERED FINAL UNLESS ALL SIGNATURES COMPLETED

REVISIONS								SHEET NO.
NO.	BY:	DATE:	NO.	BY:	DATE:			S-5
1			3					TOTAL SHEETS
2			4					18

DRAWN BY :	W. B. ALLEN	DATE :	12/18
CHECKED BY :	G. F. WILSON	DATE :	4/19
DESIGN ENGINEER OF RECORD:	G. F. WILSON	DATE :	5/21

4/26/2021 10:19:19 AM R:\Structures\B6001_SMU_CS1_500068.dgn

DocuSign Envelope ID: FE584E6F-C9DA-48A2-A14A-7A0A0AE30F04

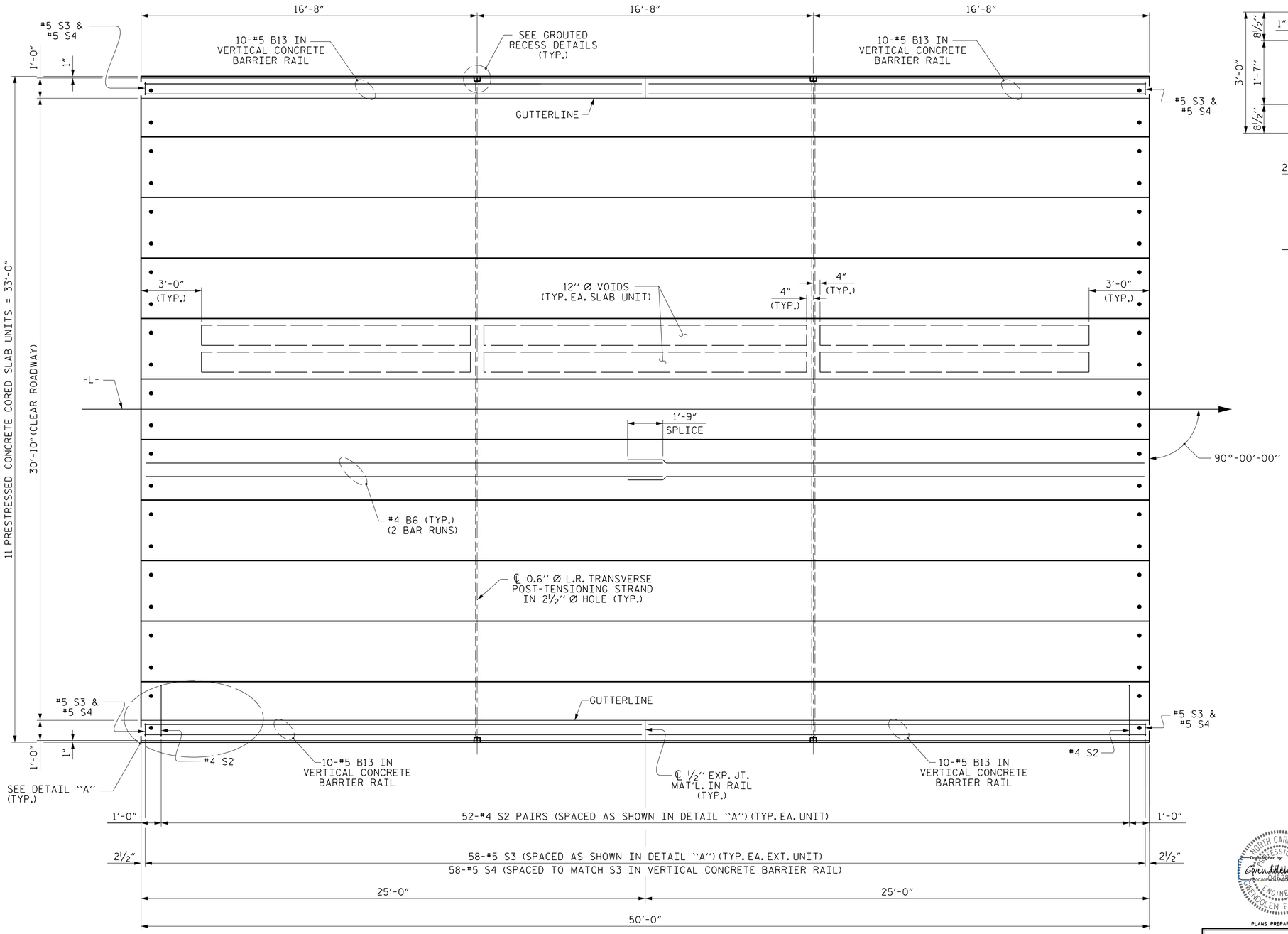

PLAN OF UNIT

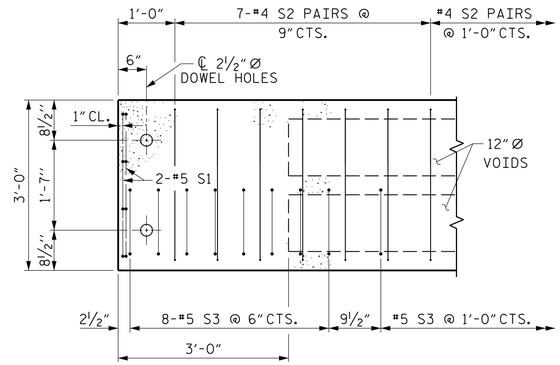

DETAIL "A"

(TYPICAL EACH END OF UNIT)
NOTE: EXTERIOR UNIT SHOWN - INTERIOR UNIT SIMILAR EXCEPT OMIT #5 S3 BARS.

PROJECT NO. B-6001

JOHNSTON COUNTY

STATION: 15+71.00 -L-

SHEET 2 OF 4

STATE OF NORTH CAROLINA
DEPARTMENT OF TRANSPORTATION
RALEIGH

PLAN OF 50' UNIT 30'-10" CLEAR ROADWAY 90° SKEW

30'-10" CLEAR ROADWAY - 90° SKEW

NORTH CAROLINA PROFESSIONAL SEAL ENGINEER GWENDOLEN F. WILSON 042202
Digitally signed by Gwendolen Wilson
6/2/2021

PLANS PREPARED BY:

NV5 ENGINEERS & CONSULTANTS, INC.
3300 REGENCY PARKWAY, SUITE 100
CARY, NC 27518
P: 919.851.1912 www.NV5.com
NC License # F-1333
formerly CALYX Engineers & Consultants

DOCUMENT NOT CONSIDERED FINAL UNLESS ALL SIGNATURES COMPLETED

REVISIONS						
NO.	BY:	DATE:	NO.	BY:	DATE:	
1			3			
2			4			

SHEET NO. S-6

TOTAL SHEETS 18

DRAWN BY : W. B. ALLEN DATE : 12/18
CHECKED BY : G. F. WILSON DATE : 4/19
DESIGN ENGINEER OF RECORD: G. F. WILSON DATE : 5/21

4/26/2021 10:11:20 AM R:\Structures\B6001_SMU_CS2_50006B.dgn

DocuSign Envelope ID: FE584E6F-C9DA-48A2-A14A-7A0A0AE30F04

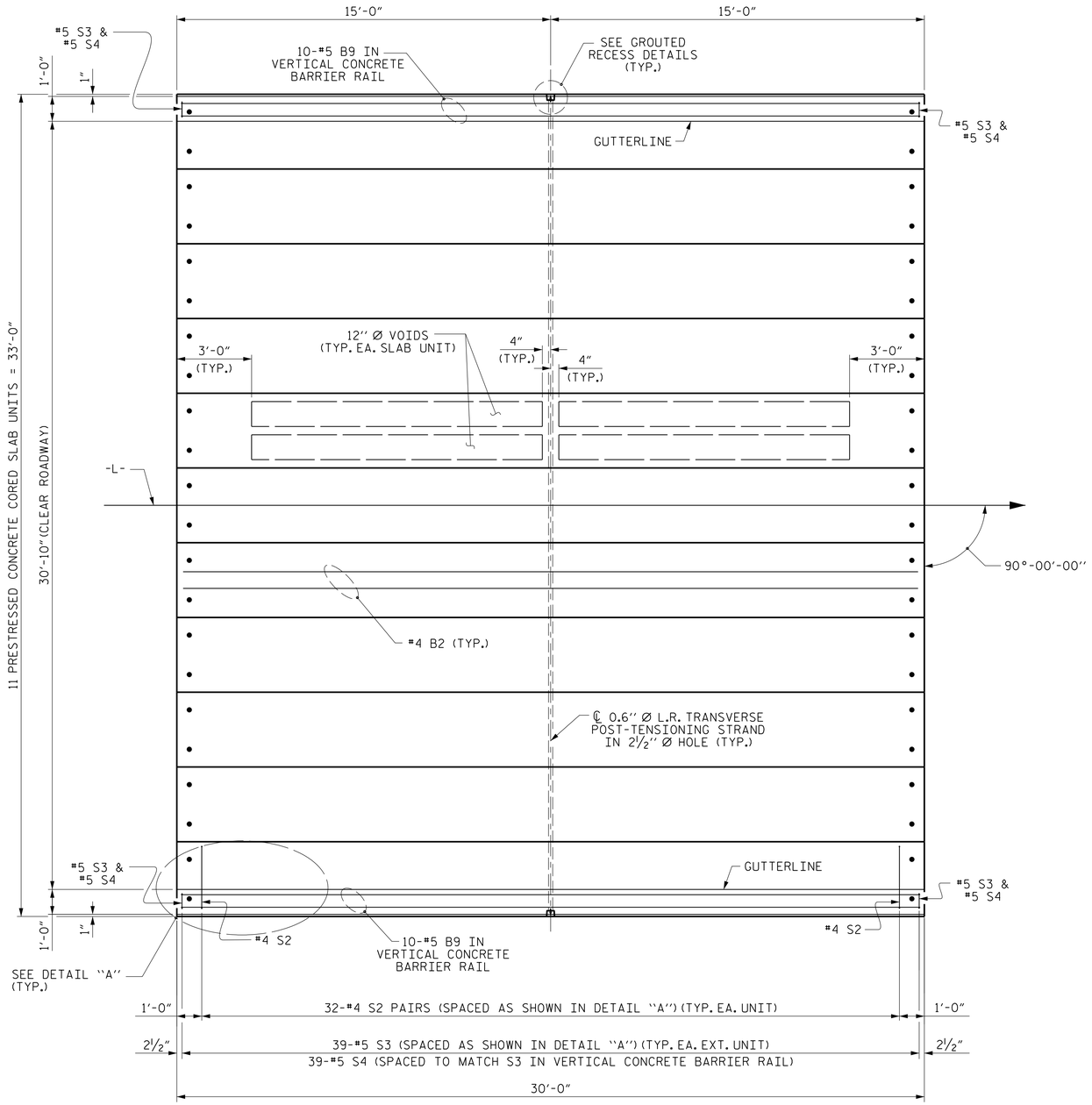

PLAN OF UNIT

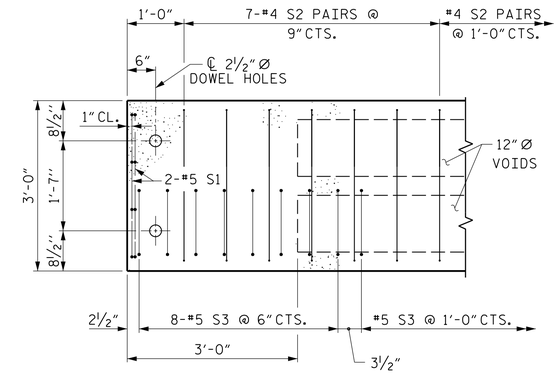

DETAIL "A"

(TYPICAL EACH END OF UNIT)
NOTE: EXTERIOR UNIT SHOWN - INTERIOR UNIT SIMILAR EXCEPT OMIT #5 S3 BARS.

PROJECT NO. B-6001

JOHNSTON COUNTY

STATION: 15+71.00 -L-

SHEET 3 OF 4

STATE OF NORTH CAROLINA
DEPARTMENT OF TRANSPORTATION
RALEIGH

PLAN OF 30' UNIT 30'-10" CLEAR ROADWAY 90° SKEW

30'-10" CLEAR ROADWAY - 90° SKEW

REVISIONS						SHEET NO.
NO.	BY:	DATE:	NO.	BY:	DATE:	S-7
1			3			TOTAL SHEETS
2			4			18

NORTH CAROLINA PROFESSIONAL SEAL ENGINEER GERALDEN F. WILSON 045202
DocuSigned by: Geraldeen Wilson
6/2/2021

PLANS PREPARED BY:

NV5 ENGINEERS & CONSULTANTS, INC.
3300 REGENCY PARKWAY, SUITE 100
CARY, NC 27518
P: 919.851.1912 www.NV5.com
NC License # F-1333
formerly CALYX Engineers & Consultants

DOCUMENT NOT CONSIDERED FINAL UNLESS ALL SIGNATURES COMPLETED

DRAWN BY :	W. B. ALLEN	DATE :	12/18
CHECKED BY :	G. F. WILSON	DATE :	4/19
DESIGN ENGINEER OF RECORD:	G. F. WILSON	DATE :	5/21

4/26/2021 10:11:21 AM R:\Structures\B6001_SMU_CS3_50006B.dgn

DocuSign Envelope ID: FE584E6F-C9DA-48A2-A14A-7A0A0AE30F04

BILL OF MATERIAL FOR VERTICAL CONCRETE BARRIER RAIL

BAR	BARS PER PAIR OF EXTERIOR UNITS	TOTAL NO.	SIZE	TYPE	LENGTH	WEIGHT
	30' UNIT					
✱ B9	20	20	#5	STR	29'-7"	617
✱ S4	78	78	#5	2	7'-2"	583
✱ EPOXY COATED REINFORCING STEEL				LBS.		1200
CLASS AA CONCRETE				CU.YDS.		7.7
TOTAL VERTICAL CONCRETE BARRIER RAIL				LN. FT.		60.25

BILL OF MATERIAL FOR VERTICAL CONCRETE BARRIER RAIL

BAR	BARS PER PAIR OF EXTERIOR UNITS	TOTAL NO.	SIZE	TYPE	LENGTH	WEIGHT
	50' UNIT					
✱ B13	40	40	#5	STR	24'-7"	1026
✱ S4	116	116	#5	2	7'-2"	867
✱ EPOXY COATED REINFORCING STEEL				LBS.		1893
CLASS AA CONCRETE				CU.YDS.		12.8
TOTAL VERTICAL CONCRETE BARRIER RAIL				LN. FT.		100.25

GUTTERLINE ASPHALT THICKNESS & RAIL HEIGHT

	ASPHALT OVERLAY THICKNESS	RAIL HEIGHT
	@ MID-SPAN	@ MID-SPAN
30' UNITS	2⅝"	3'-8⅝"
50' UNITS	1⅝"	3'-7⅝"

CORED SLABS REQUIRED

	NUMBER	LENGTH	TOTAL LENGTH
30' UNIT			
EXTERIOR C.S.	2	30'-0"	60'-0"
INTERIOR C.S.	9	30'-0"	270'-0"
TOTAL			330'-0"

CORED SLABS REQUIRED

	NUMBER	LENGTH	TOTAL LENGTH
50' UNIT			
EXTERIOR C.S.	2	50'-0"	100'-0"
INTERIOR C.S.	9	50'-0"	450'-0"
TOTAL			550'-0"

BILL OF MATERIAL FOR ONE 30' CORED SLAB UNIT

BAR	NUMBER	SIZE	TYPE	EXTERIOR UNIT LENGTH	EXTERIOR UNIT WEIGHT	INTERIOR UNIT LENGTH	INTERIOR UNIT WEIGHT
B2	2	#4	STR	29'-8"	40	29'-8"	40
S1	8	#5	3	4'-3"	35	4'-3"	35
S2	64	#4	3	5'-4"	228	5'-4"	228
✱ S3	39	#5	1	5'-7"	227		
REINFORCING STEEL			LBS.		303		303
✱ EPOXY COATED REINFORCING STEEL			LBS.		227		
5000 P.S.I. CONCRETE			CU. YDS.		4.4		4.4
0.6" Ø L.R. STRANDS			No.		9		9

BILL OF MATERIAL FOR ONE 50' CORED SLAB UNIT

BAR	NUMBER	SIZE	TYPE	EXTERIOR UNIT LENGTH	EXTERIOR UNIT WEIGHT	INTERIOR UNIT LENGTH	INTERIOR UNIT WEIGHT
B6	4	#4	STR	25'-9"	69	25'-9"	69
S1	8	#5	3	4'-3"	35	4'-3"	35
S2	104	#4	3	5'-4"	371	5'-4"	371
✱ S3	58	#5	1	5'-7"	338		
REINFORCING STEEL			LBS.		475		475
✱ EPOXY COATED REINFORCING STEEL			LBS.		338		
6500 P.S.I. CONCRETE			CU. YDS.		7.1		7.1
0.6" Ø L.R. STRANDS			No.		19		19

BAR TYPES

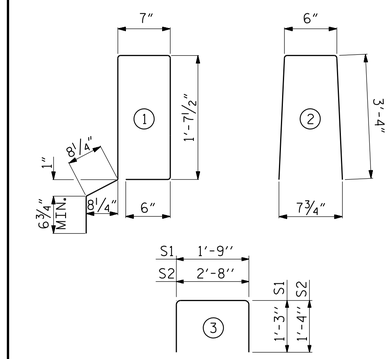

ALL BAR DIMENSIONS ARE OUT TO OUT

DEAD LOAD DEFLECTION AND CAMBER

	3'-0" x 1'-9"
30' CORED SLAB UNIT	0.6" Ø L.R. STRAND
CAMBER (SLAB ALONE IN PLACE)	¼" ↑
DEFLECTION DUE TO SUPERIMPOSED DEAD LOAD✱✱	⅛" ↓
FINAL CAMBER	⅛" ↑

✱✱ INCLUDES FUTURE WEARING SURFACE

DEAD LOAD DEFLECTION AND CAMBER

	3'-0" x 1'-9"
50' CORED SLAB UNIT	0.6" Ø L.R. STRAND
CAMBER (SLAB ALONE IN PLACE)	1½" ↑
DEFLECTION DUE TO SUPERIMPOSED DEAD LOAD✱✱	⅜" ↓
FINAL CAMBER	1⅛" ↑

✱✱ INCLUDES FUTURE WEARING SURFACE

NOTES

ALL PRESTRESSING STRANDS SHALL BE 7-WIRE LOW RELAXATION GRADE 270 STRANDS AND SHALL CONFORM TO AASHTO M203 EXCEPT FOR SAMPLING REQUIREMENTS WHICH SHALL BE IN ACCORDANCE WITH THE STANDARD SPECIFICATIONS.

ALL REINFORCING STEEL CAST WITH THE CORED SLAB SECTIONS SHALL BE GRADE 60 AND SHALL BE INCLUDED IN THE UNIT PRICE BID FOR PRESTRESSED CONCRETE CORED SLABS.

RECESSES FOR TRANSVERSE STRANDS SHALL BE GROUTED AFTER THE TENSIONING OF THE STRANDS.

THE 2½" Ø DOWEL HOLES AT FIXED ENDS OF SLAB SECTIONS SHALL BE FILLED WITH NON-SHRINK GROUT.

THE BACKER RODS SHALL CONFORM TO THE REQUIREMENTS OF TYPE M BOND BREAKER. SEE SECTION 1028 OF THE STANDARD SPECIFICATIONS.

WHEN CORED SLABS ARE CAST, AN INTERNAL HOLD-DOWN SYSTEM SHALL BE EMPLOYED TO PREVENT VOIDS FROM RISING OR MOVING SIDEWAYS. AT LEAST SIX WEEKS PRIOR TO CASTING CORED SLABS, THE CONTRACTOR SHALL SUBMIT TO THE ENGINEER FOR REVIEW AND COMMENT, DETAILED DRAWINGS OF THE PROPOSED HOLD-DOWN SYSTEM. IN ADDITION TO STRUCTURAL DETAILS, LOCATION AND SPACING OF THE HOLD-DOWNS SHALL BE INDICATED.

ALL REINFORCING STEEL IN THE VERTICAL CONCRETE BARRIER RAIL SHALL BE EPOXY COATED.

PRESTRESSING STRANDS SHALL BE CUT FLUSH WITH THE CORED SLAB UNIT ENDS.

APPLY EPOXY PROTECTIVE COATING TO CORED SLAB UNIT ENDS.

GROOVED CONTRACTION JOINTS, ½" IN DEPTH, SHALL BE TOOLED IN ALL EXPOSED FACES OF THE BARRIER RAIL AND IN ACCORDANCE WITH ARTICLE 825-10(B) OF THE STANDARD SPECIFICATIONS. A CONTRACTION JOINT SHALL BE LOCATED AT EACH THIRD POINT BETWEEN BARRIER RAIL EXPANSION JOINTS. ONLY ONE CONTRACTION JOINT IS REQUIRED AT MIDPOINT OF BARRIER RAIL SEGMENTS LESS THAN 20 FEET IN LENGTH AND NO CONTRACTION JOINTS ARE REQUIRED FOR THOSE SEGMENTS LESS THAN 10 FEET IN LENGTH.

FLAME CUTTING OF THE TRANSVERSE POST-TENSIONING STRAND IS NOT ALLOWED.

THE TRANSFER OF LOAD FROM THE ANCHORAGES TO THE CORED SLAB UNIT SHALL BE DONE WHEN THE CONCRETE HAS REACHED A COMPRESSIVE STRENGTH OF NOT LESS THAN THE REQUIRED STRENGTH SHOWN IN THE "CONCRETE RELEASE STRENGTH" TABLE.

FOR GROUT FOR STRUCTURES, SEE SPECIAL PROVISIONS.

THE PERMITTED THREADED INSERTS ARE DETAILED AS AN OPTION FOR THE CONTRACTOR TO ATTACH FALSEWORK AND FORMWORK DURING CONSTRUCTION.

THE PERMITTED THREADED INSERTS IN THE EXTERIOR UNITS SHALL BE SIZED BY THE CONTRACTOR, SPACED AT 4'-0" CENTERS AND GALVANIZED IN ACCORDANCE WITH SECTION 1076 OF THE STANDARD SPECIFICATIONS. STAINLESS STEEL THREADED INSERTS MAY BE USED AS AN ALTERNATE.

THE PERMITTED THREADED INSERTS SHALL BE GROUTED BY THE CONTRACTOR IMMEDIATELY FOLLOWING REMOVAL OF THE FALSEWORK.

THE COST OF THE PERMITTED THREADED INSERTS SHALL BE INCLUDED IN THE PRICE BID FOR THE PRECAST UNITS.

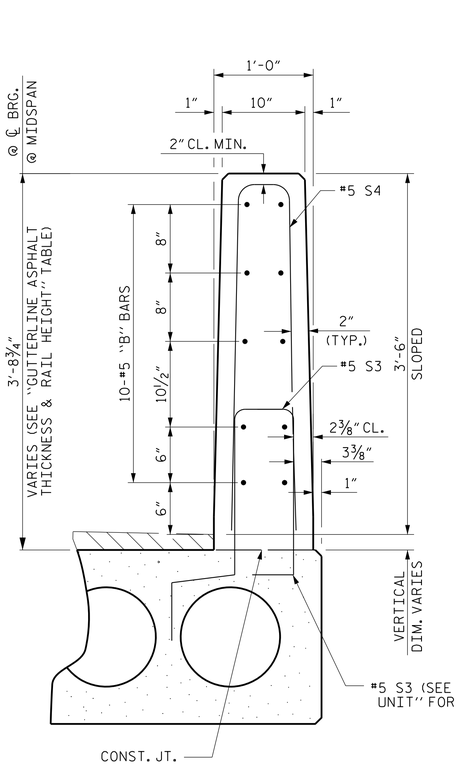

VERTICAL CONCRETE BARRIER RAIL SECTION

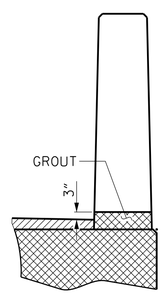

SECTION T-T

AT OPEN JOINT AT BENT (THIS IS TO BE USED WHERE FOAM JOINT IS NOT USED)

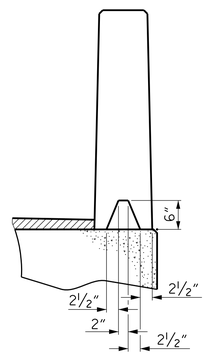

SECTION S-S

AT DAM IN OPEN JOINT (THIS IS TO BE USED ONLY WHEN SLIP FORM IS USED)

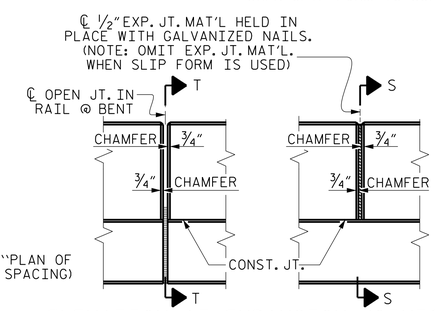

ELEVATION AT EXPANSION JOINTS

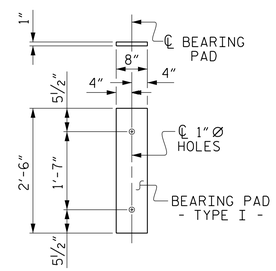

FIXED END

(TYPE I - 44 REQ'D)

ELASTOMERIC BEARING DETAILS

ELASTOMER IN ALL BEARINGS SHALL BE 50 DUROMETER HARDNESS.

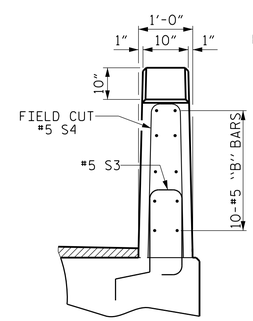

END VIEW

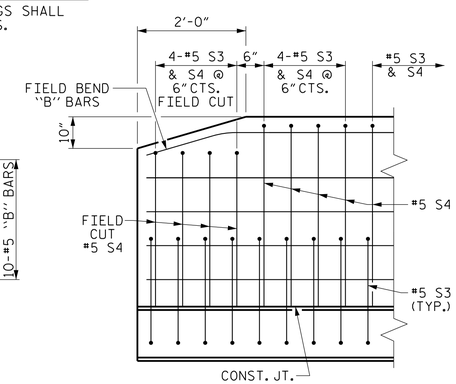

SIDE VIEW

END OF RAIL DETAILS

GRADE 270 STRANDS	
	0.6" Ø L.R.
AREA (SQUARE INCHES)	0.217
ULTIMATE STRENGTH (LBS. PER STRAND)	58,600
APPLIED PRESTRESS (LBS. PER STRAND)	43,950

CONCRETE RELEASE STRENGTH	
UNIT	PSI
30' UNITS	4000
50' UNITS	4900

PROJECT NO. B-6001

JOHNSTON COUNTY

STATION: 15+71.00 -L-

SHEET 4 OF 4

STATE OF NORTH CAROLINA
DEPARTMENT OF TRANSPORTATION
RALEIGH

3'-0" X 1'-9" PRESTRESSED CONCRETE CORED SLAB UNIT 90° SKEW

30'-10" CLEAR ROADWAY - 90° SKEW

NORTH CAROLINA PROFESSIONAL ENGINEER SEAL WENDOLEN F. WILSON 044202

DocuSigned by: Gwendolen Wilson 6/2/2021

PLANS PREPARED BY:

NV5 ENGINEERS & CONSULTANTS, INC.
3300 REGENCY PARKWAY, SUITE 100
CARY, NC 27518
P: 919.851.1912 www.NV5.com
NC License # F-1333
formerly CALYX Engineers & Consultants

DOCUMENT NOT CONSIDERED FINAL UNLESS ALL SIGNATURES COMPLETED

REVISIONS							
NO.	BY:	DATE:	NO.	BY:	DATE:	SHEET NO.	S-8
1			3			TOTAL SHEETS	18
2			4				

DRAWN BY: W. B. ALLEN DATE: 12/18
CHECKED BY: G. F. WILSON DATE: 4/19
DESIGN ENGINEER OF RECORD: G. F. WILSON DATE: 5/21

4/26/2021 10:11:22 AM R:\Structures\B6001_SMU_CS4_50006B.dgn

DocuSign Envelope ID: FE584E6F-C9DA-48A2-A14A-7A0A0AE30F04

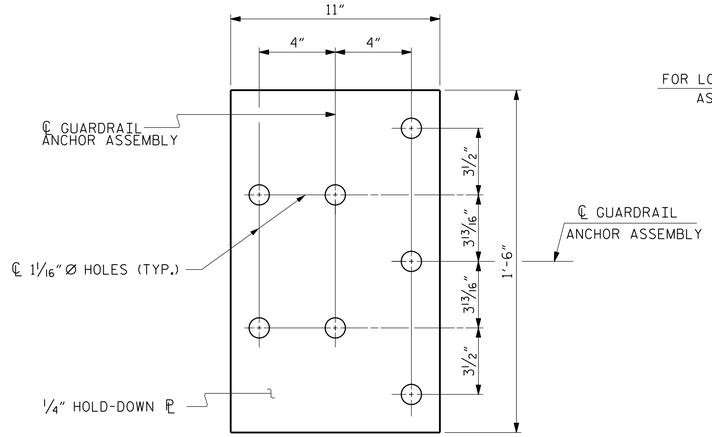

PLAN

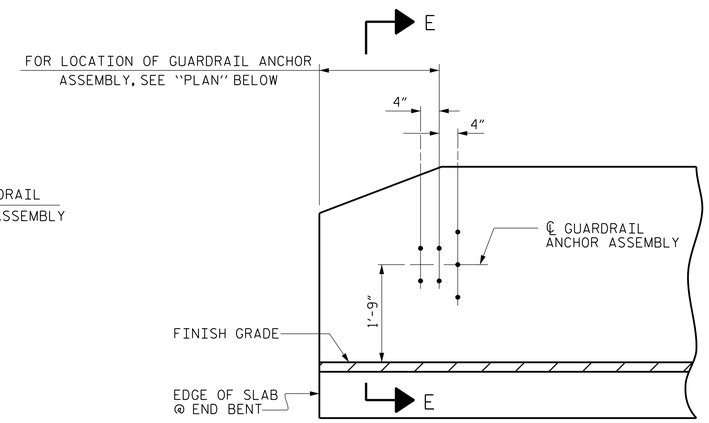

ELEVATION

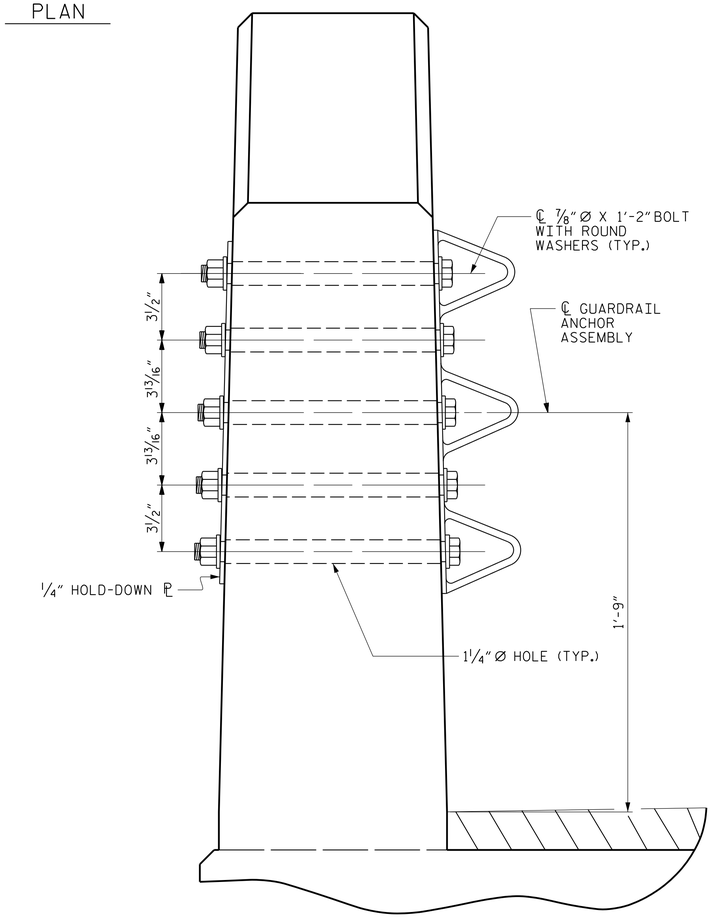

SECTION E-E

GUARDRAIL ANCHOR ASSEMBLY DETAILS

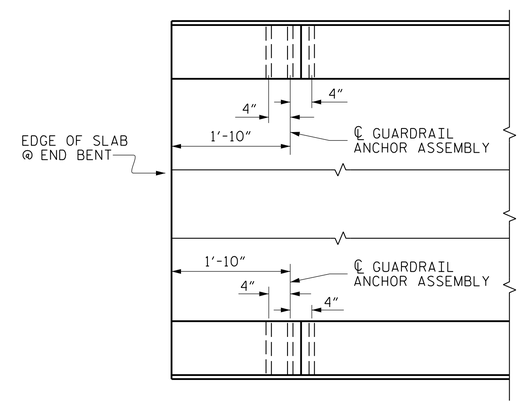

PLAN

LOCATION OF ANCHORS FOR GUARDRAIL

END BENT #1 SHOWN, END BENT #2 SIMILAR.

NOTES

THE GUARDRAIL ANCHOR ASSEMBLY SHALL CONSIST OF A 1/4" HOLD DOWN PLATE AND 7 - 7/8" Ø BOLTS WITH NUTS AND WASHERS.

THE HOLD-DOWN PLATE SHALL CONFORM TO AASHTO M270 GRADE 36. AFTER FABRICATION, THE HOLD-DOWN PLATE SHALL BE HOT-DIP GALVANIZED IN ACCORDANCE WITH AASHTO M111.

BOLTS SHALL CONFORM TO THE REQUIREMENTS OF ASTM A307 AND NUTS SHALL CONFORM TO THE REQUIREMENTS OF AASHTO M291. BOLTS, NUTS AND WASHERS SHALL BE GALVANIZED. (AT THE CONTRACTOR'S OPTION, STAINLESS STEEL BOLTS, NUTS AND WASHERS MAY BE USED AS AN ALTERNATE FOR THE 7/8" Ø GALVANIZED BOLTS, NUTS AND WASHERS. THEY SHALL CONFORM TO OR EXCEED THE MECHANICAL REQUIREMENTS OF ASTM A307. THE USE OF THIS ALTERNATE SHALL BE APPROVED BY THE ENGINEER.)

THE GUARDRAIL ANCHOR ASSEMBLY IS REQUIRED AT ALL POINTS WHERE APPROACH GUARDRAIL IS TO BE ATTACHED TO THE END OF BARRIER RAIL. FOR POINTS OF ATTACHMENT, SEE SKETCH.

AFTER INSTALLATION, THE EXPOSED THREAD OF THE BOLT SHALL BE BURRED WITH A SHARP POINTED TOOL.

THE COST OF THE GUARDRAIL ANCHOR ASSEMBLY SHALL BE INCLUDED IN THE UNIT CONTRACT PRICE BID FOR VERTICAL CONCRETE BARRIER RAIL.

THE VERTICAL REINFORCING BARS MAY BE SHIFTED SLIGHTLY IN THE VERTICAL CONCRETE BARRIER RAIL TO CLEAR ASSEMBLY BOLTS.

THE 1 1/4" Ø HOLES SHALL BE FORMED OR DRILLED WITH A CORE BIT. IMPACT TOOLS WILL NOT BE PERMITTED. ANY CONCRETE DAMAGED BY THIS WORK SHALL BE REPAIRED TO THE SATISFACTION OF THE ENGINEER.

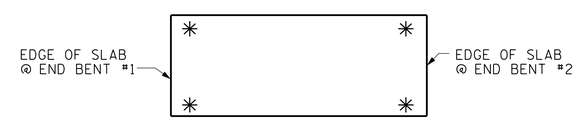

SKETCH SHOWING POINTS OF ATTACHMENT

✳ DENOTES GUARDRAIL ANCHOR ASSEMBLY

PROJECT NO. B-6001

JOHNSTON COUNTY

STATION: 15+71.00 -L-

NORTH CAROLINA PROFESSIONAL ENGINEER SEAL 045292 GWINDOLEN F. WILSON

DocuSigned by: Gwindolen Wilson 6/2/2021

PLANS PREPARED BY:

NV5 ENGINEERS & CONSULTANTS, INC.
3300 REGENCY PARKWAY, SUITE 100
CARY, NC 27518
P: 919.851.1912 www.NV5.com
NC License # F-1333
formerly CALYX Engineers & Consultants

STATE OF NORTH CAROLINA
DEPARTMENT OF TRANSPORTATION
RALEIGH

GUARDRAIL ANCHORAGE DETAILS FOR VERTICAL CONCRETE BARRIER RAIL

REVISIONS						SHEET NO.
NO.	BY:	DATE:	NO.	BY:	DATE:	S-9
1			3			TOTAL SHEETS
2			4			18

DOCUMENT NOT CONSIDERED FINAL UNLESS ALL SIGNATURES COMPLETED

DRAWN BY :	W. B. ALLEN	DATE :	12/18
CHECKED BY :	G. F. WILSON	DATE :	4/19
DESIGN ENGINEER OF RECORD:	G. F. WILSON	DATE :	5/21

4/26/2021 10:21:26 AM R:\Structures\B6001_SMU_GR_500068.dgn

DocuSign Envelope ID: FE584E6F-C9DA-48A2-A14A-7A0A0AE30F04

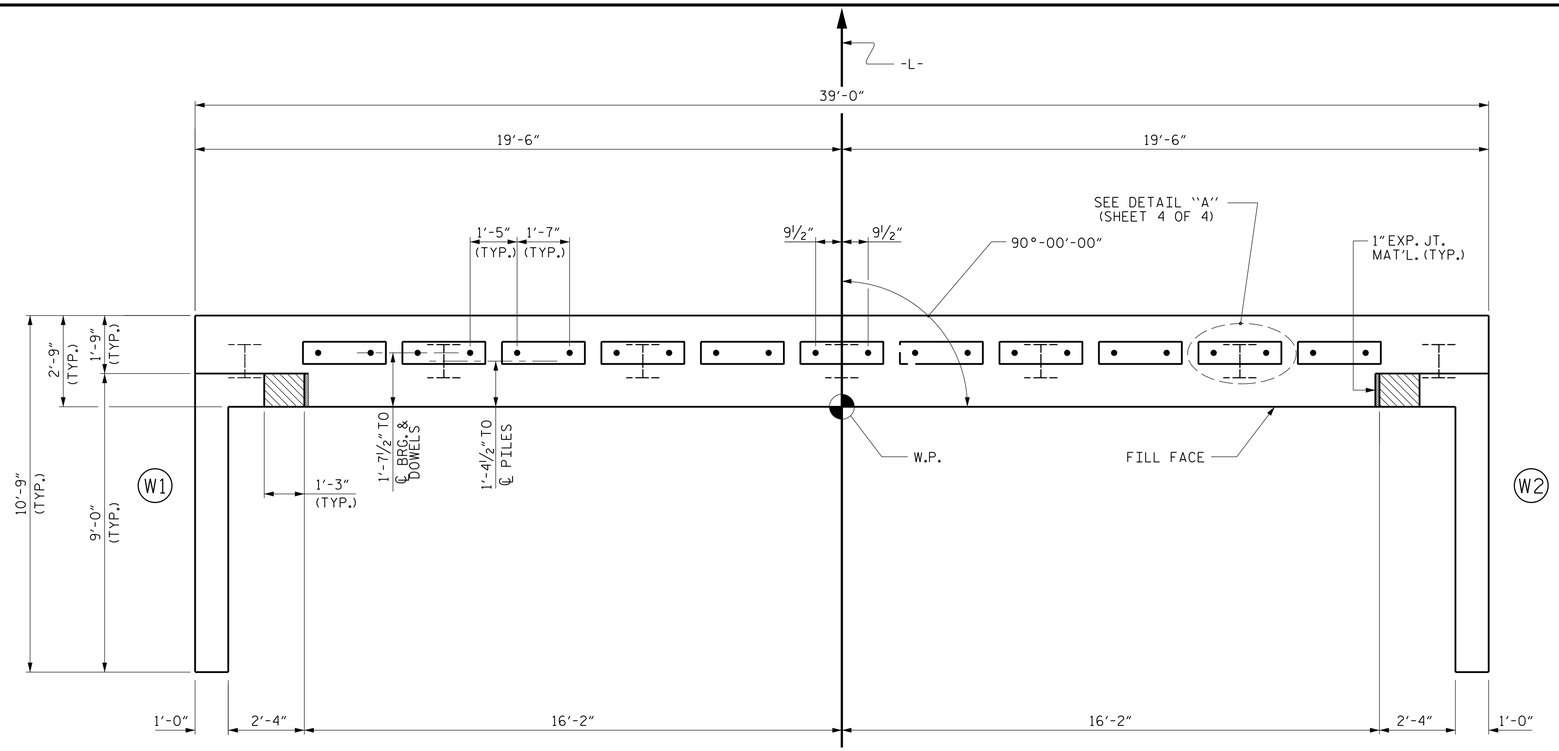

PLAN

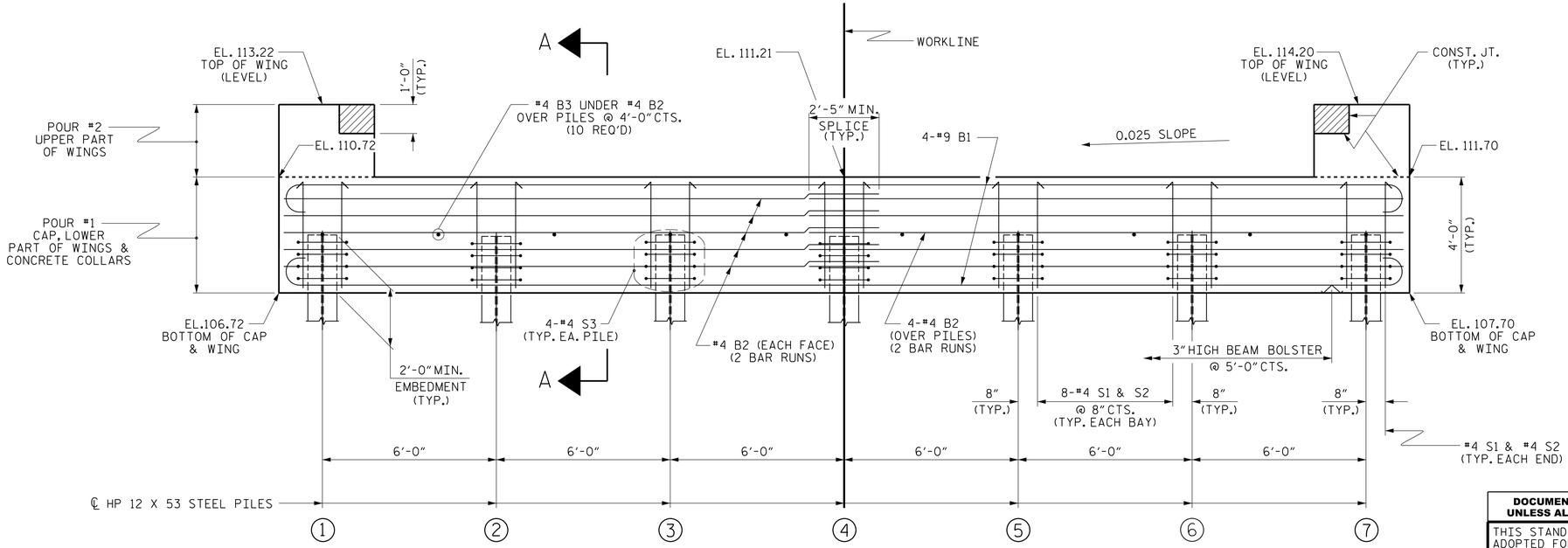

ELEVATION

WINGS NOT SHOWN FOR CLARITY.
FOR SECTION A-A, SEE SHEET 4 OF 4.
CONCRETE COLLARS FOR STEEL PILES NOT SHOWN IN PLAN AND ELEVATION VIEWS FOR CLARITY.
SEE "CORROSION PROTECTION FOR STEEL PILES DETAIL", SHEET 4 OF 4.

NOTES

STIRRUPS IN CAP MAY BE SHIFTED AS NECESSARY TO CLEAR DOWELS.

THE CONCRETE IN THE SHADED AREA OF THE WING SHALL BE POURED AFTER THE VERTICAL CONCRETE BARRIER RAIL IS CAST IF SLIP FORMING IS USED.

FOR PILE SPLICE DETAILS, SEE SHEET 4 OF 4.

FOR WING DETAILS, SEE SHEET 3 OF 4.

TOP OF PILE ELEVATIONS	
1	108.77
2	108.92
3	109.07
4	109.22
5	109.37
6	109.52
7	109.67

PILE ELEVATIONS AT MIN. 2'-0" EMBEDMENT RIGHT SIDE OF PILE FOR PILES IN THE CAP.

PROJECT NO. B-6001
JOHNSTON COUNTY
STATION: 15+71.00 -L-

SHEET 1 OF 4

PLANS PREPARED BY:
NV5 ENGINEERS & CONSULTANTS, INC.
3300 REGENCY PARKWAY, SUITE 100
CARY, NC 27518
P: 919.851.1912 www.NV5.com
NC License # F-1333
formerly CALYX Engineers & Consultants

DOCUMENT NOT CONSIDERED FINAL UNLESS ALL SIGNATURES COMPLETED

THIS STANDARD DRAWING REVIEWED & ADOPTED FOR USE AT THE REFERENCED LOCATION BY THE UNDERSIGNED:

NORTH CAROLINA PROFESSIONAL SEAL ENGINEER GWENDOLEN F. WILSON 047382
Docu Signed by: Gwendolen Wilson
6/2/2021

STATE OF NORTH CAROLINA
DEPARTMENT OF TRANSPORTATION
RALEIGH

SUBSTRUCTURE

END BENT No. 1

REVISIONS						SHEET NO.
NO.	BY:	DATE:	NO.	BY:	DATE:	S-10
1			3			TOTAL SHEETS
2			4			18

ASSEMBLED BY : W. B. ALLEN DATE : 12/18
CHECKED BY : G. F. WILSON DATE : 4/19
DRAWN BY : WJH 12/11
CHECKED BY : AAC 12/11
REV. 4/15 MAA/TMG

4/26/2021 10:12:28 AM R:\Structures\B6001_SMU_EL_S00068.dgn

STD. NO. EB_33_90S4

DocuSign Envelope ID: FE584E6F-C9DA-48A2-A14A-7A0A0AE30F04

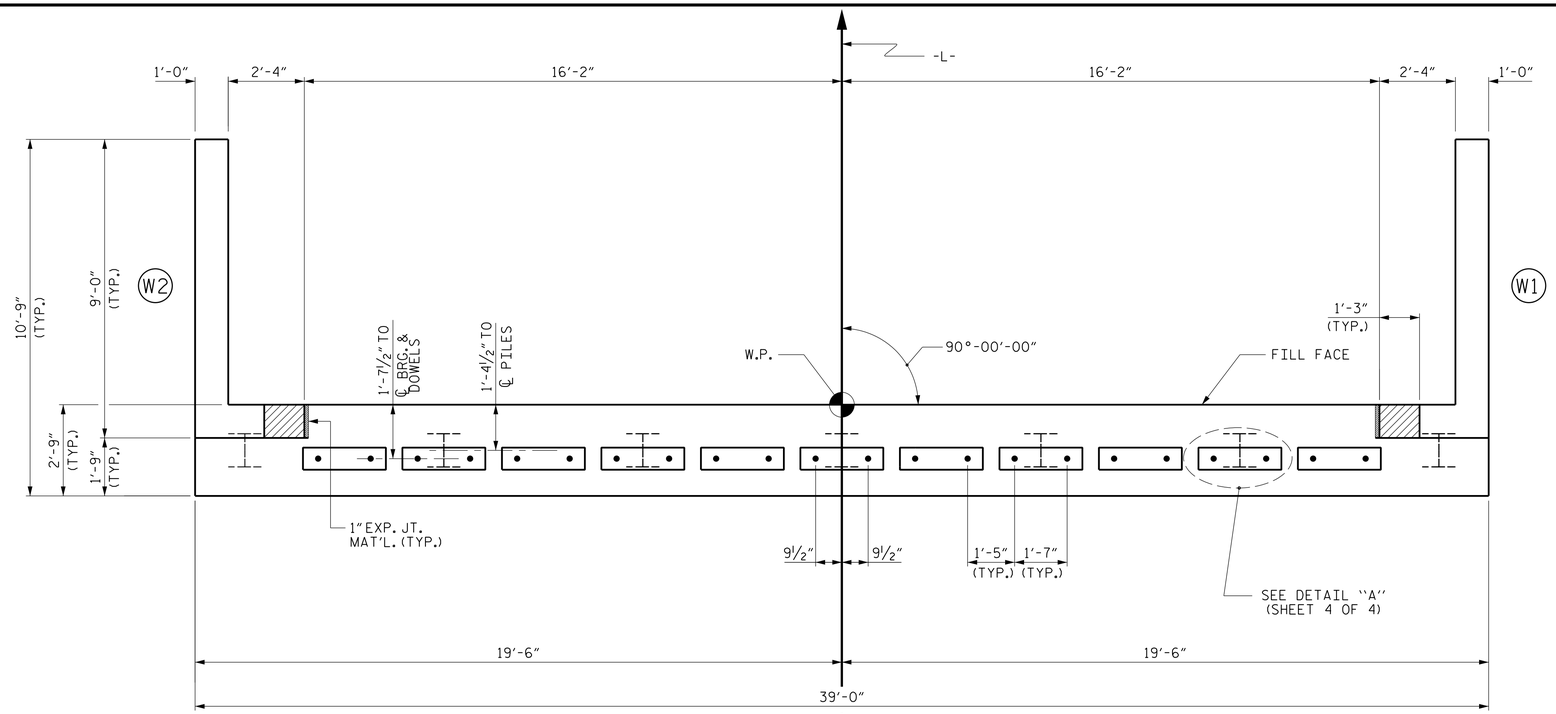

PLAN

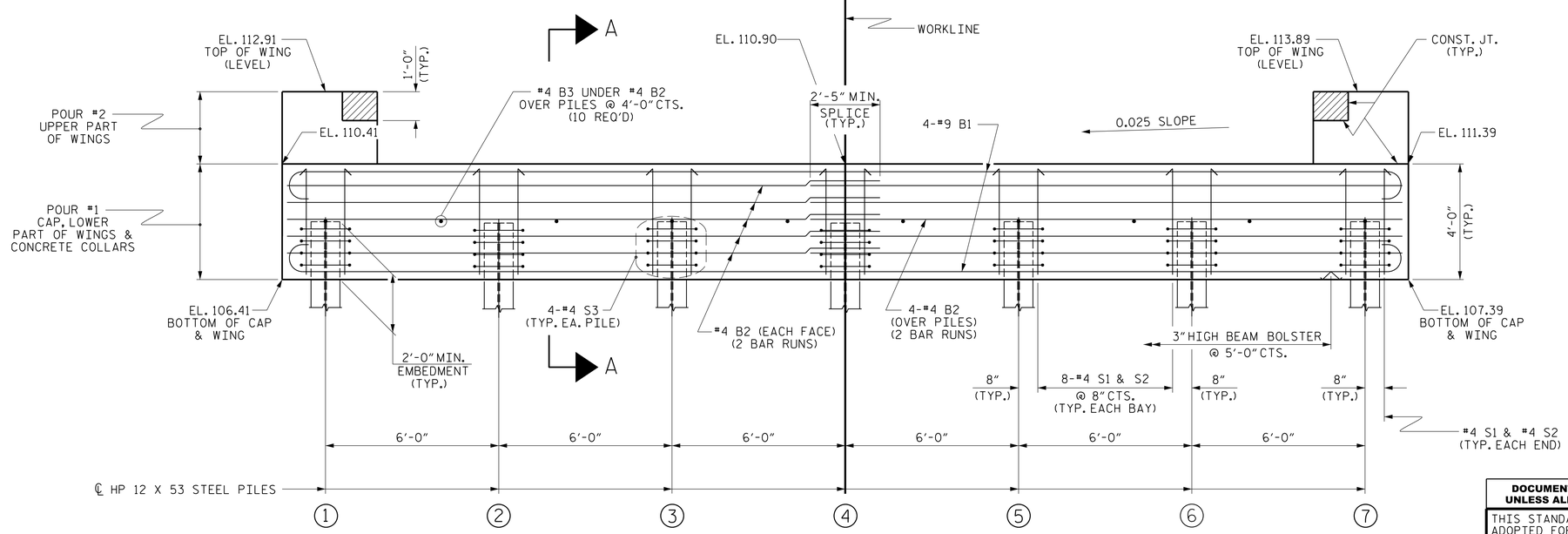

ELEVATION

WINGS NOT SHOWN FOR CLARITY.
FOR SECTION A-A, SEE SHEET 4 OF 4.
CONCRETE COLLARS FOR STEEL PILES NOT SHOWN IN PLAN AND ELEVATION VIEWS FOR CLARITY.
SEE "CORROSION PROTECTION FOR STEEL PILES DETAIL", SHEET 4 OF 4.

NOTES

STIRRUPS IN CAP MAY BE SHIFTED AS NECESSARY TO CLEAR DOWELS.

THE CONCRETE IN THE SHADED AREA OF THE WING SHALL BE POURED AFTER THE VERTICAL CONCRETE BARRIER RAIL IS CAST IF SLIP FORMING IS USED.

FOR PILE SPLICE DETAILS, SEE SHEET 4 OF 4.

FOR WING DETAILS, SEE SHEET 3 OF 4.

TOP OF PILE ELEVATIONS	
1	108.46
2	108.61
3	108.76
4	108.91
5	109.06
6	109.21
7	109.36

PILE ELEVATIONS AT MIN. 2'-0" EMBEDMENT RIGHT SIDE OF PILE FOR PILES IN THE CAP.

PROJECT NO. B-6001
JOHNSTON COUNTY
STATION: 15+71.00 -L-

SHEET 2 OF 4

PLANS PREPARED BY:
NV5 ENGINEERS & CONSULTANTS, INC.
3300 REGENCY PARKWAY, SUITE 100
CARY, NC 27518
P: 919.851.1912 www.NV5.com
NC License # F-1333
formerly CALYX Engineers & Consultants

DOCUMENT NOT CONSIDERED FINAL UNLESS ALL SIGNATURES COMPLETED

THIS STANDARD DRAWING REVIEWED & ADOPTED FOR USE AT THE REFERENCED LOCATION BY THE UNDERSIGNED:

NORTH CAROLINA PROFESSIONAL SEAL ENGINEER GUNDERSON F. WILSON
Docusigned by: Gunderson Wilson
6/2/2021

STATE OF NORTH CAROLINA
DEPARTMENT OF TRANSPORTATION
RALEIGH

SUBSTRUCTURE

END BENT No. 2

REVISIONS								SHEET NO.
NO.	BY:	DATE:	NO.	BY:	DATE:			S-11
1			3					TOTAL SHEETS
2			4					18

ASSEMBLED BY : W. B. ALLEN DATE : 12/18
CHECKED BY : G. F. WILSON DATE : 4/19
DRAWN BY : WJH 12/11
CHECKED BY : AAC 12/11
REV. 4/15 MAA/TMG

4/26/2021 10:11:29 AM R:\Structures\B6001_SMU_E2_500068.dgn

STD. NO. EB_33_90S4

DocuSign Envelope ID: FE584E6F-C9DA-48A2-A14A-7A0A0AE30F04

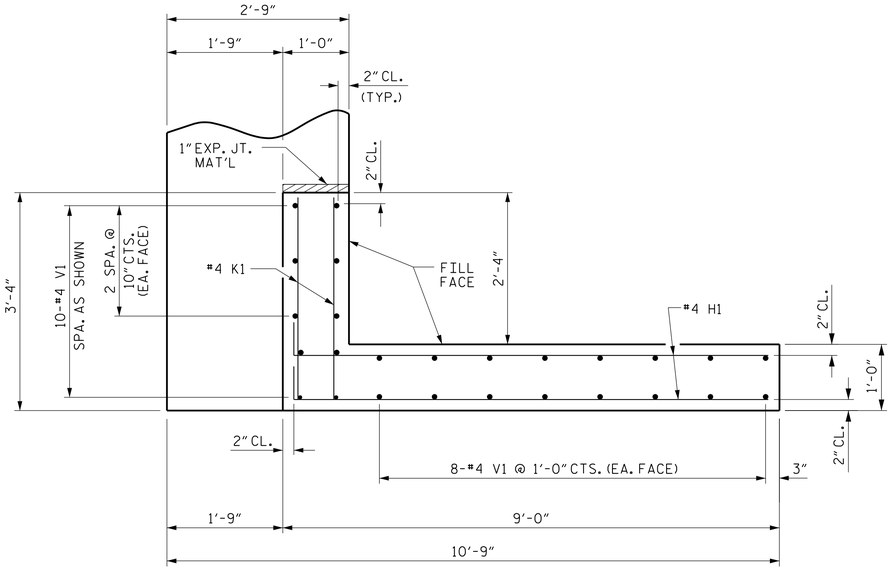

PLAN OF WING (W1)

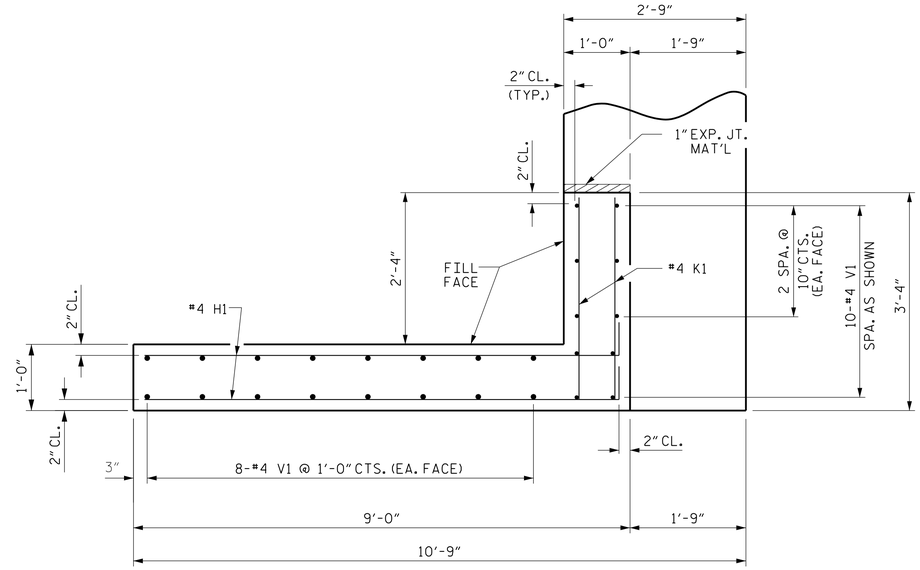

PLAN OF WING (W2)

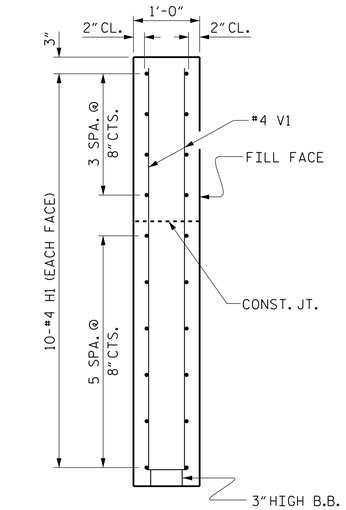

SECTION X-X

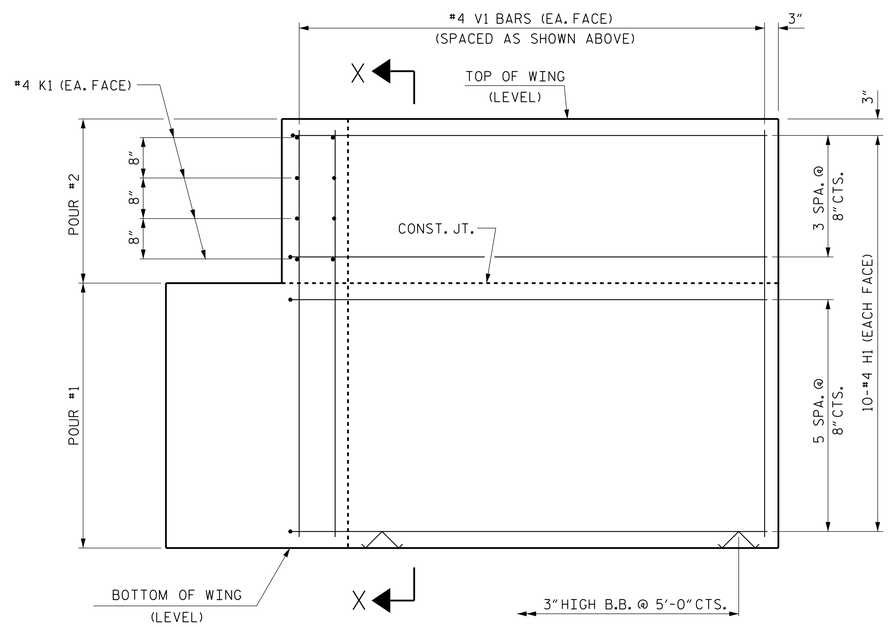

ELEVATION OF WING (W1)

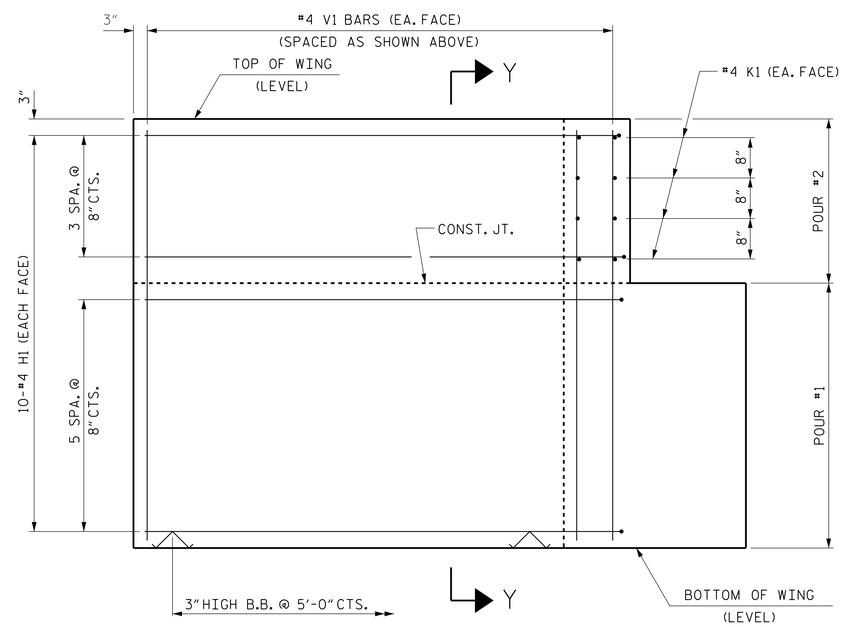

ELEVATION OF WING (W2)

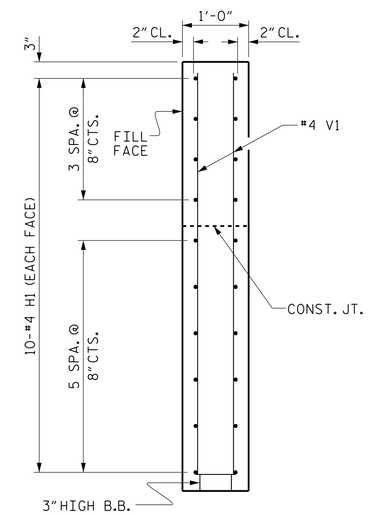

SECTION Y-Y

WING DETAILS

PROJECT NO. B-6001

JOHNSTON COUNTY

STATION: 15+71.00 -L-

SHEET 3 OF 4

DOCUMENT NOT CONSIDERED FINAL UNLESS ALL SIGNATURES COMPLETED

THIS STANDARD DRAWING REVIEWED & ADOPTED FOR USE AT THE REFERENCED LOCATION BY THE UNDERSIGNED:

NORTH CAROLINA PROFESSIONAL ENGINEER SEAL 019283 GWENDOLEN F. WILSON

DocuSigned by: Gwendolen Wilson 6/2/2021

PLANS PREPARED BY:

NV5 ENGINEERS & CONSULTANTS, INC.
3300 REGENCY PARKWAY, SUITE 100
CARY, NC 27518
P: 919.851.1912 www.NV5.com
NC License # F-1333
formerly CALYX Engineers & Consultants

STATE OF NORTH CAROLINA
DEPARTMENT OF TRANSPORTATION
RALEIGH

SUBSTRUCTURE

END BENT
WING DETAILS

REVISIONS						SHEET NO.
NO.	BY:	DATE:	NO.	BY:	DATE:	S-12
1			3			TOTAL SHEETS
2			4			18

STD. NO. EB_33_90S4

ASSEMBLED BY : W. B. ALLEN		DATE : 12/18	
CHECKED BY : G. F. WILSON		DATE : 4/19	
DRAWN BY : WJH 12/11	REV. 4/15	MAA/TMG	
CHECKED BY : AAC 12/11			

4/26/2021 10:11:39 AM R:\Structures\B6001_SMU_E3_500068.dgn

DocuSign Envelope ID: FE584E6F-C9DA-48A2-A14A-7A0A0AE30F04

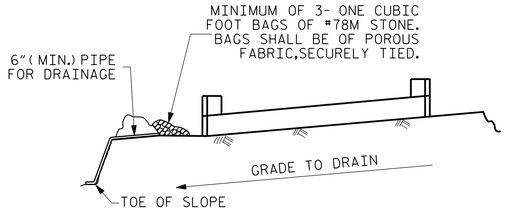

BAGGED STONE AND PIPE SHALL BE PLACED IMMEDIATELY AFTER COMPLETION OF END BENT EXCAVATION. PIPE MAY BE EITHER CONCRETE, CORRUGATED STEEL, CORRUGATED ALUMINUM ALLOY, OR CORRUGATED PLASTIC. PERFORATED PIPE WILL NOT BE ALLOWED.

BAGGED STONE SHALL REMAIN IN PLACE UNTIL THE ENGINEER DIRECTS THAT IT BE REMOVED. THE CONTRACTOR SHALL REMOVE AND DISPOSE OF SILT ACCUMULATIONS AT BAGGED STONE WHEN SO DIRECTED BY THE ENGINEER. BAGS SHALL BE REMOVED AND REPLACED WHENEVER THE ENGINEER DETERMINES THAT THEY HAVE DETERIORATED AND LOST THEIR EFFECTIVENESS.

NO SEPARATE PAYMENT WILL BE MADE FOR THIS WORK AND THE ENTIRE COST OF THIS WORK SHALL BE INCLUDED IN THE UNIT CONTRACT PRICE BID FOR THE SEVERAL PAY ITEMS.

TEMPORARY DRAINAGE AT END BENT

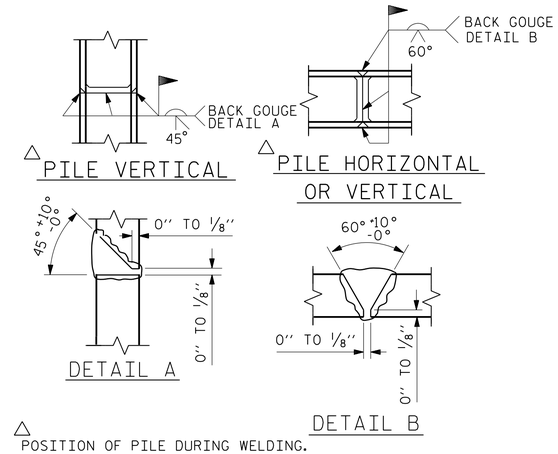

△ POSITION OF PILE DURING WELDING.

PILE SPLICE DETAILS

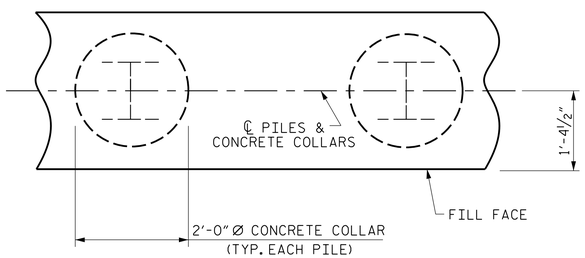

PLAN

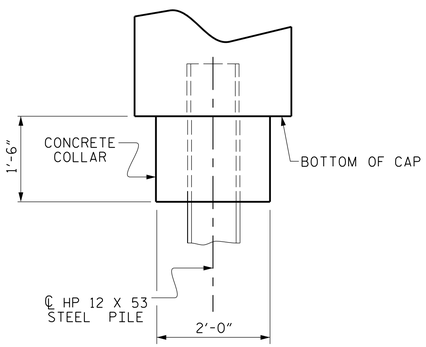

ELEVATION

CORROSION PROTECTION FOR STEEL PILES DETAIL

(END BENT No. 1 SHOWN, END BENT No. 2 SIMILAR BY ROTATION)

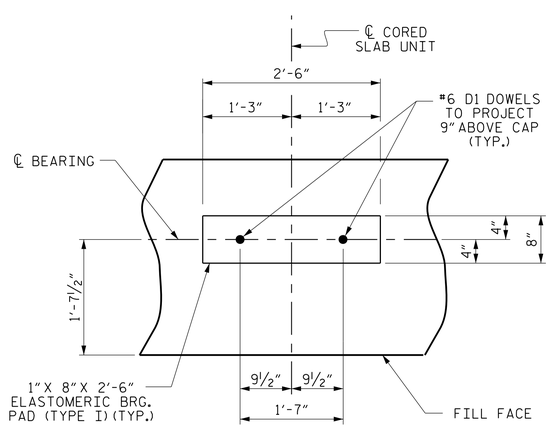

DETAIL "A"

(END BENT No. 1 SHOWN, END BENT No. 2 SIMILAR BY ROTATION)

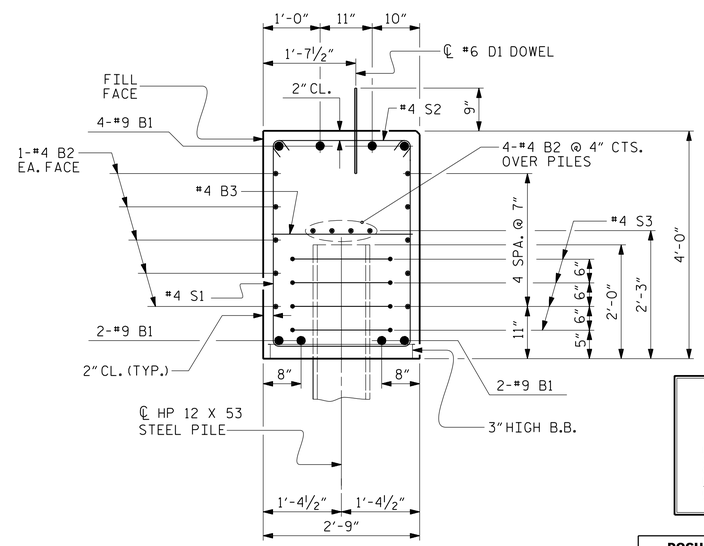

SECTION A-A

(CONCRETE COLLAR NOT SHOWN FOR CLARITY. SEE "CORROSION PROTECTION FOR STEEL PILES DETAIL.")

BAR TYPES

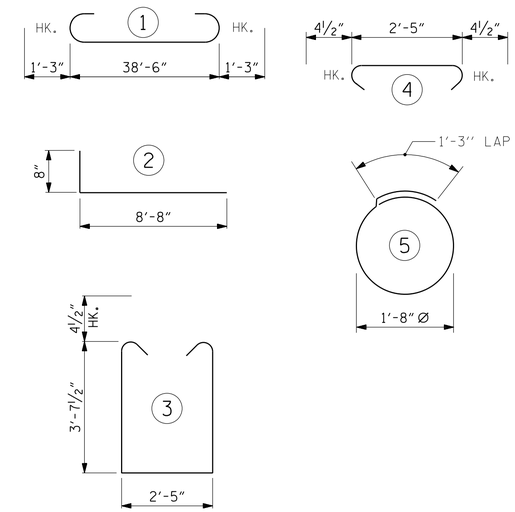

ALL BAR DIMENSIONS ARE OUT TO OUT.

END BENT No. 1	END BENT No. 2
HP 12 X 53 STEEL PILES NO: 7 LIN. FT.= 350	HP 12 X 53 STEEL PILES NO: 7 LIN. FT.= 350
PILE DRIVING EQUIPMENT SETUP FOR HP 12 X 53 STEEL PILES NO: 7	PILE DRIVING EQUIPMENT SETUP FOR HP 12 X 53 STEEL PILES NO: 7
PILE REDRIVES NO: 4	PILE REDRIVES NO: 4

BILL OF MATERIAL FOR ONE END BENT

BAR	NO.	SIZE	TYPE	LENGTH	WEIGHT
B1	8	#9	1	41'-0"	1115
B2	28	#4	STR	20'-7"	385
B3	10	#4	STR	2'-5"	16
D1	22	#6	STR	1'-6"	50
H1	40	#4	2	9'-4"	249
K1	16	#4	STR	2'-11"	31
S1	50	#4	3	10'-5"	348
S2	50	#4	4	3'-2"	106
S3	28	#4	5	6'-6"	122
V1	52	#4	STR	6'-2"	214

REINFORCING STEEL (FOR ONE END BENT) 2636 LBS.

CLASS A CONCRETE BREAKDOWN (FOR ONE END BENT)

POUR #1 CAP, LOWER PART OF WINGS & COLLARS 19.5 C.Y.

POUR #2 UPPER PART OF WINGS 2.1 C.Y.

TOTAL CLASS A CONCRETE 21.6 C.Y.

PLANS PREPARED BY:

NV5 ENGINEERS & CONSULTANTS, INC.
3300 REGENCY PARKWAY, SUITE 100
CARY, NC 27518
P: 919.851.1912 www.NV5.com
NC License # F-1333
formerly CALYX Engineers & Consultants

PROJECT NO. B-6001

JOHNSTON COUNTY

STATION: 15+71.00 -L-

SHEET 4 OF 4

DOCUMENT NOT CONSIDERED FINAL UNLESS ALL SIGNATURES COMPLETED

THIS STANDARD DRAWING REVIEWED & ADOPTED FOR USE AT THE REFERENCED LOCATION BY THE UNDERSIGNED:

NORTH CAROLINA PROFESSIONAL SEAL ENGINEER GWENDOLEN F. WILSON

Digitally signed by Gwendolen Wilson
DocuSign Envelope ID: 0C0C0A4D-9A4A-4C2C-A9B4-B4B4C2C2C2C2
6/2/2021

STATE OF NORTH CAROLINA
DEPARTMENT OF TRANSPORTATION
RALEIGH

SUBSTRUCTURE

END BENT No. 1 & 2 DETAILS

ASSEMBLED BY : W. B. ALLEN	DATE : 12/18
CHECKED BY : G. F. WILSON	DATE : 4/19
DRAWN BY : WJH 12/11	REV. 4/17 MAA/THC
CHECKED BY : AAC 12/11	

REVISIONS						SHEET NO.
NO.	BY:	DATE:	NO.	BY:	DATE:	S-13
1			3			TOTAL SHEETS
2			4			18

STD. NO. EB_33_90S4

DocuSign Envelope ID: FE584E6F-C9DA-48A2-A14A-7A0A0AE30F04

NOTES

STIRRUPS IN CAP MAY BE SHIFTED AS NECESSARY TO CLEAR DOWELS.

★ INVERT ALTERNATE STIRRUPS.

GALVANIZE THE TOP OF EACH INTERIOR BENT PILE A MINIMUM OF 27 FEET. GALVANIZE IN ACCORDANCE WITH SECTION 1076 OF THE STANDARD SPECIFICATIONS.

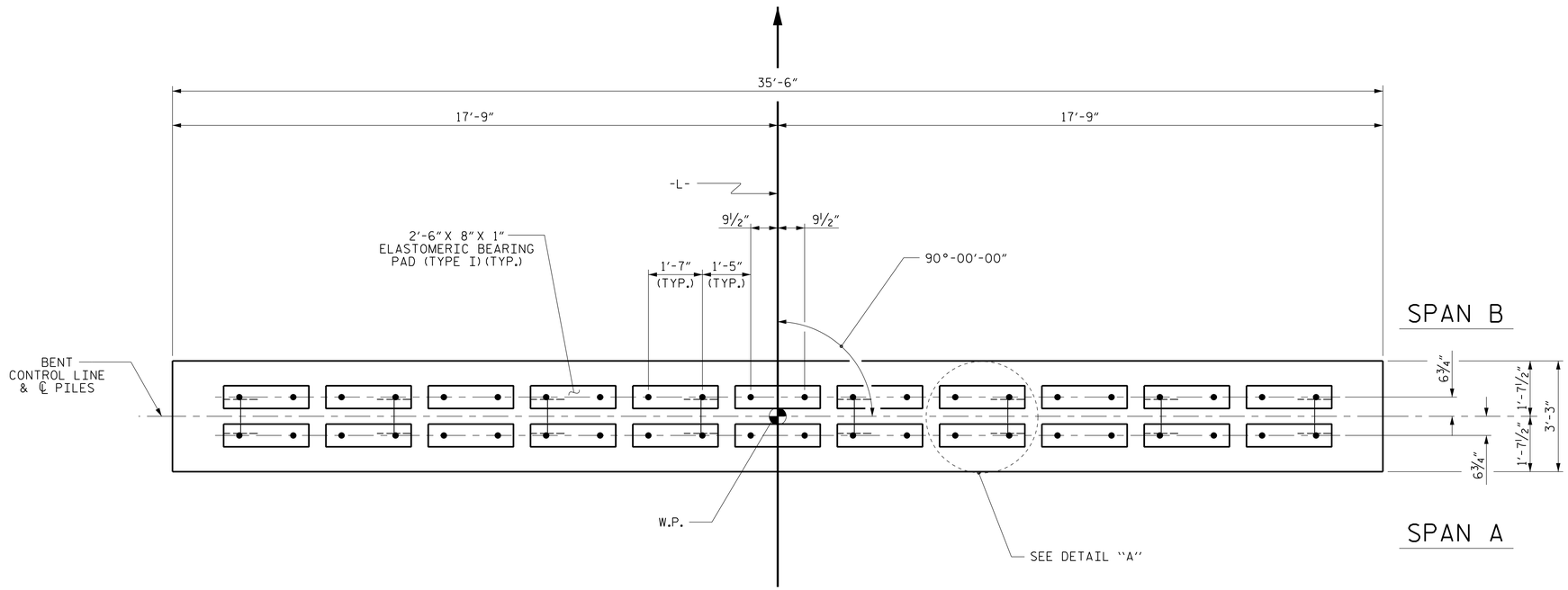

PLAN

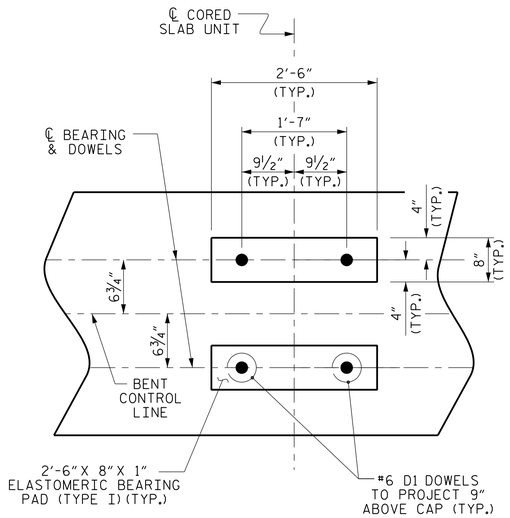

DETAIL "A"

(DIMENSIONS ARE TYPICAL EACH BEARING)

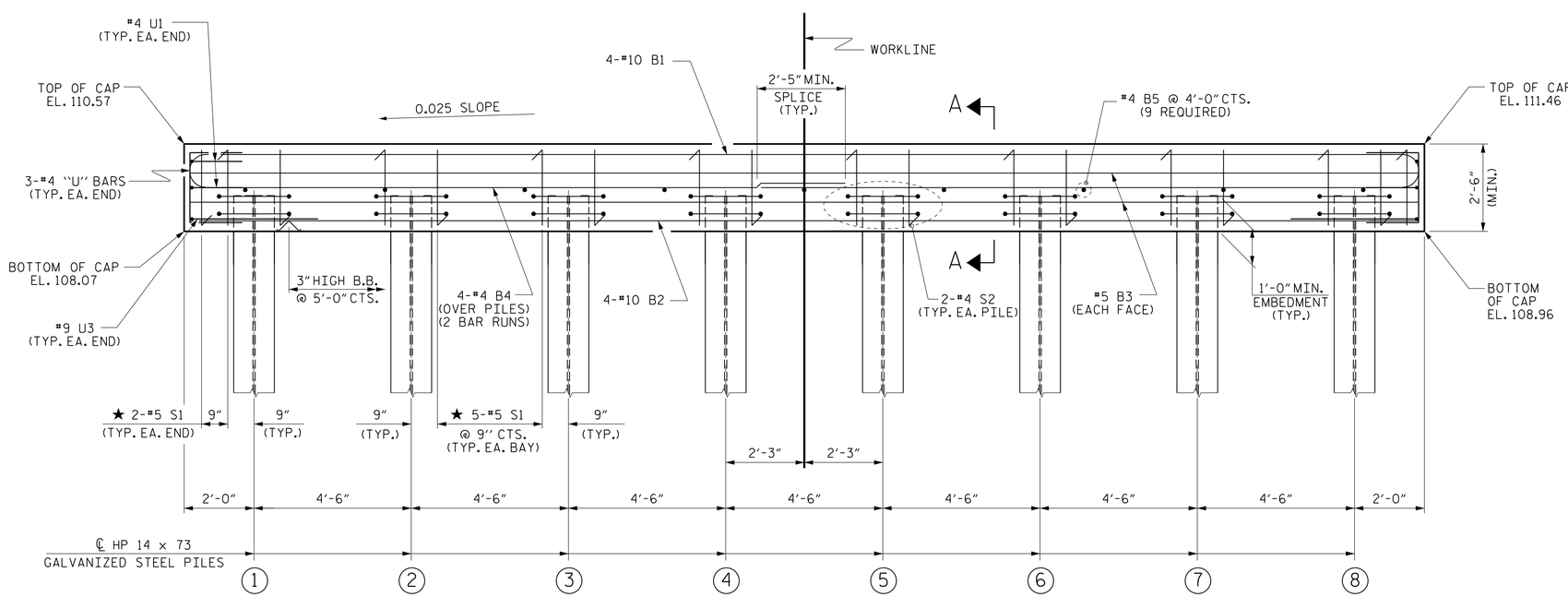

ELEVATION

FOR SECTION A-A, SEE SHEET 2 OF 2

TOP OF PILE ELEVATIONS	
1	109.14
2	109.25
3	109.36
4	109.48
5	109.59
6	109.70
7	109.81
8	109.93

PILE ELEVATIONS AT MIN. 1'-0" EMBEDMENT RIGHT SIDE OF PILE FOR PILES IN THE CAP.

PROJECT NO. B-6001

JOHNSTON COUNTY

STATION: 15+71.00 -L-

SHEET 1 OF 2

PLANS PREPARED BY:

NV5 ENGINEERS & CONSULTANTS, INC.
3300 REGENCY PARKWAY, SUITE 100
CARY, NC 27518
P: 919.851.1912 www.NV5.com
NC License # F-1333
formerly CALYX Engineers & Consultants

DOCUMENT NOT CONSIDERED FINAL UNLESS ALL SIGNATURES COMPLETED

THIS STANDARD DRAWING REVIEWED & ADOPTED FOR USE AT THE REFERENCED LOCATION BY THE UNDERSIGNED:

NORTH CAROLINA PROFESSIONAL SEAL ENGINEER GARNETT F. WILSON

Docusigned by: Garnett F. Wilson
DocuSign Envelope ID: FE584E6F-C9DA-48A2-A14A-7A0A0AE30F04
6/2/2021

STATE OF NORTH CAROLINA
DEPARTMENT OF TRANSPORTATION
RALEIGH

SUBSTRUCTURE

BENT No. 1

REVISIONS						SHEET NO.
NO.	BY:	DATE:	NO.	BY:	DATE:	S-14
1			3			TOTAL SHEETS
2			4			18

ASSEMBLED BY : W. B. ALLEN DATE : 1/19
CHECKED BY : G. F. WILSON DATE : 4/19

DRAWN BY : DGE 05/10
CHECKED BY : MKT 05/10

REV. 6/17 MAA/THC

4/26/2021 10:11:33 AM R:\Structures\B6001_SMU_B1_500068.dgn

STD. NO. 14" HP_BT_33_90S_<60'

DocuSign Envelope ID: FE584E6F-C9DA-48A2-A14A-7A0A0AE30F04

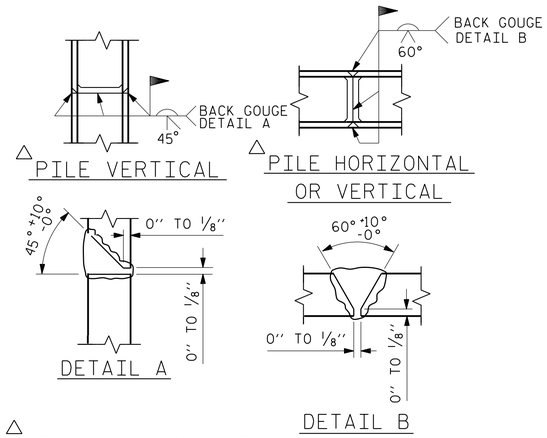

△ POSITION OF PILE DURING WELDING.

PILE SPLICE DETAILS

BAR TYPES

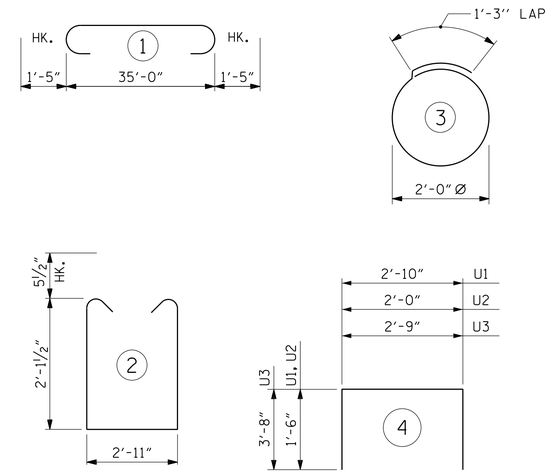

ALL BAR DIMENSIONS ARE OUT TO OUT.

BILL OF MATERIAL FOR ONE BENT

BAR	NO.	SIZE	TYPE	LENGTH	WEIGHT
B1	4	#10	1	37'-10"	651
B2	4	#10	STR	35'-2"	605
B3	4	#5	STR	35'-2"	147
B4	8	#4	STR	18'-10"	101
B5	9	#4	STR	2'-11"	18
D1	44	#6	STR	1'-6"	99
S1	39	#5	2	8'-1"	329
S2	16	#4	3	7'-7"	81
U1	4	#4	4	5'-10"	16
U2		#4	4	5'-0"	
U3	2	#9	4	10'-1"	69

REINFORCING STEEL (FOR ONE BENT) 2136 LBS

CLASS A CONCRETE BREAKDOWN (FOR ONE BENT)

TOTAL CLASS A CONCRETE 10.7 C.Y.

HP 14 X 73 GALVANIZED STEEL PILES (FOR ONE BENT)

No. 8 LIN. FT. 440

PILE DRIVING EQUIPMENT SETUP FOR HP 14 X 73 GALVANIZED STEEL PILES (FOR ONE BENT) NO: 8

PILE REDRIVES NO: 4

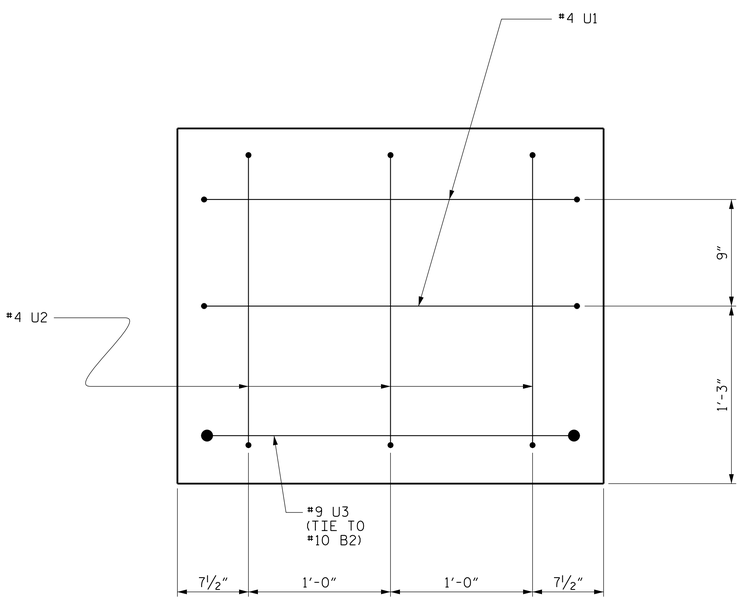

END OF CAP VIEW

(TYPICAL BOTH ENDS)

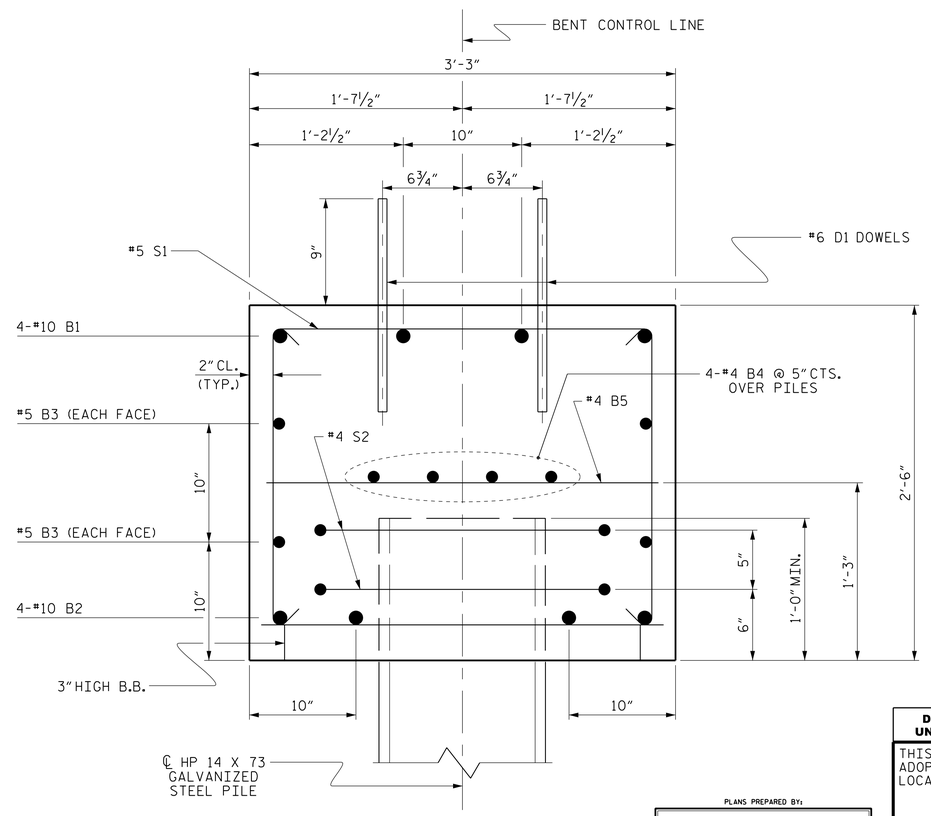

SECTION A-A

PROJECT NO. B-6001

JOHNSTON COUNTY

STATION: 15+71.00 -L-

SHEET 2 OF 2

STATE OF NORTH CAROLINA
DEPARTMENT OF TRANSPORTATION
RALEIGH

SUBSTRUCTURE

BENT No. 1

PLANS PREPARED BY:

NV5 ENGINEERS & CONSULTANTS, INC.
3300 REGENCY PARKWAY, SUITE 100
CARY, NC 27518
P: 919.851.1912 www.NV5.com
NC License # F-1333
formerly CALYX Engineers & Consultants

DOCUMENT NOT CONSIDERED FINAL UNLESS ALL SIGNATURES COMPLETED

THIS STANDARD DRAWING REVIEWED & ADOPTED FOR USE AT THE REFERENCED LOCATION BY THE UNDERSIGNED:

NORTH CAROLINA PROFESSIONAL SEAL 036202 ENGINEER GWENDOLEN F. WILSON

Docusigned by: Gwendolen Wilson
DocuSign Envelope ID: FE584E6F-C9DA-48A2-A14A-7A0A0AE30F04
6/2/2021

REVISIONS							SHEET NO.
NO.	BY:	DATE:	NO.	BY:	DATE:		S-15
1			3				TOTAL SHEETS
2			4				18

ASSEMBLED BY : W. B. ALLEN DATE : 1/19
CHECKED BY : G. F. WILSON DATE : 4/19

DRAWN BY : DGE 05/10
CHECKED BY : MKT 05/10
REV. 6/17 MAA/THC

4/26/2021 10:11:34 AM R:\Structures\B6001_SMU_B2_500068.dgn

STD. NO. 14" HP_BT_33_90S_<60'

DocuSign Envelope ID: FE584E6F-C9DA-48A2-A14A-7A0A0AE30F04

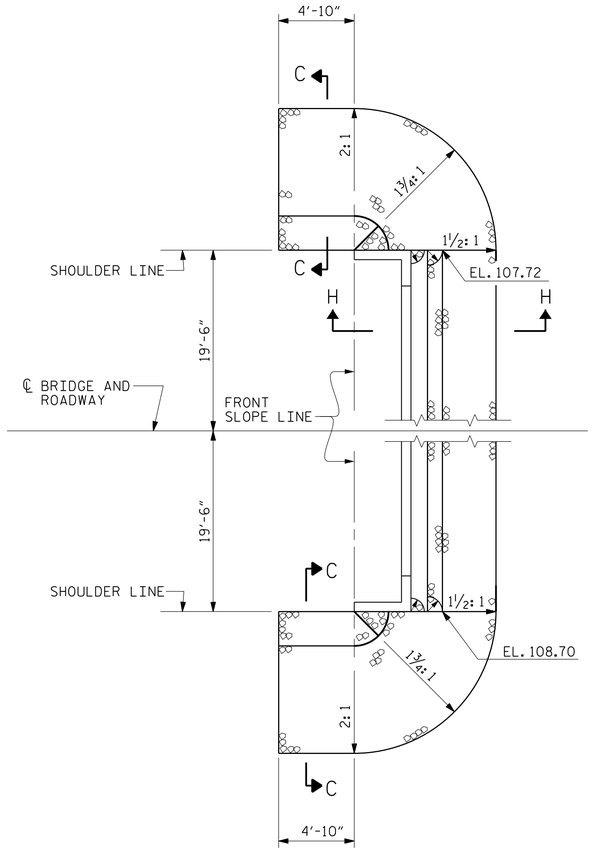

END BENT 1

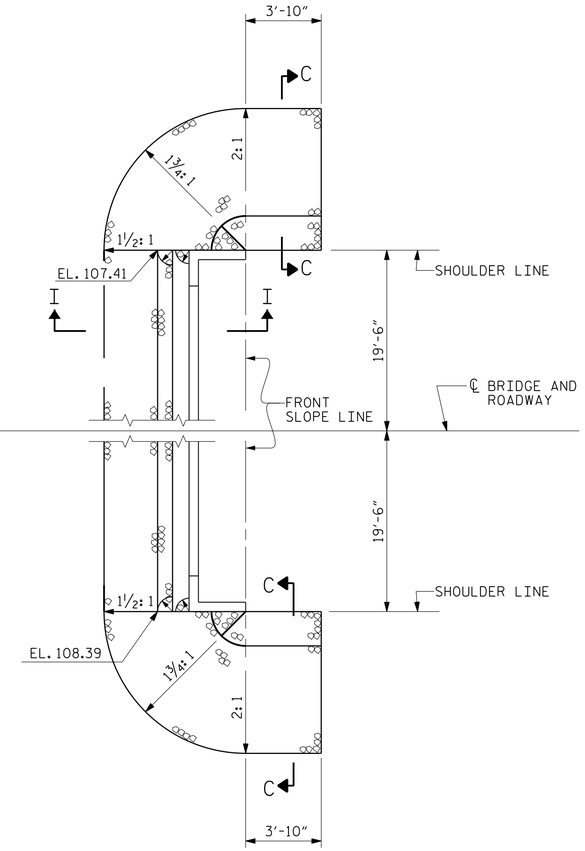

END BENT 2

SHOULDER RIP RAP IS HIGHER THAN BERM RIP RAP

NOTES :

FOR BERM WIDTH DIMENSIONS, SEE GENERAL DRAWING.

ESTIMATED QUANTITIES		
BRIDGE @ STA. 15+71.00 -L-	RIP RAP CLASS II (2'-0" THICK)	GEOTEXTILE FOR DRAINAGE
	TONS	SQUARE YARDS
END BENT 1	40	45
END BENT 2	35	40

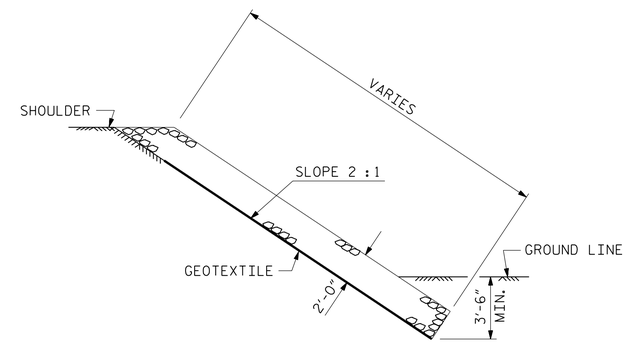

SECTION C-C

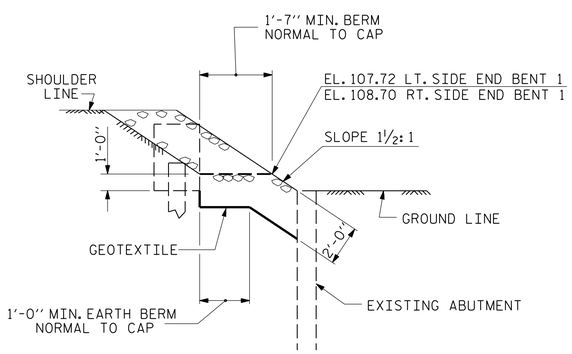

SECTION H-H

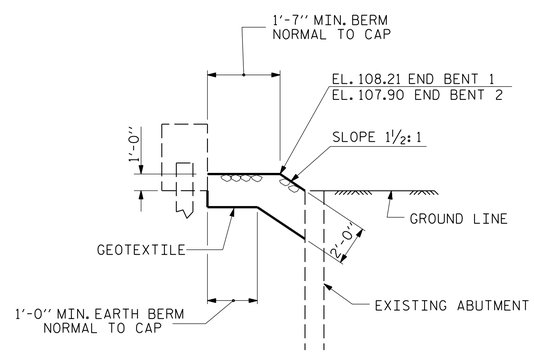

℄ SECTION

BERM RIP RAPPED

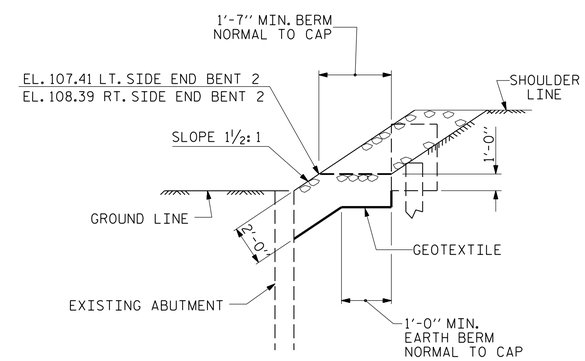

SECTION I-I

PROJECT NO. B-6001

JOHNSTON COUNTY

STATION: 15+71.00 -L-

STATE OF NORTH CAROLINA
DEPARTMENT OF TRANSPORTATION
RALEIGH

RIP RAP DETAILS

NORTH CAROLINA PROFESSIONAL ENGINEER SEAL GWENDOLEN F. WILSON

DocuSigned by: Gwendolen Wilson 6/2/2021

PLANS PREPARED BY:

NV5 ENGINEERS & CONSULTANTS, INC.
3300 REGENCY PARKWAY, SUITE 100
CARY, NC 27518
P: 919.851.1912 www.NV5.com
NC License # F-1333
formerly CALYX Engineers & Consultants

DOCUMENT NOT CONSIDERED FINAL UNLESS ALL SIGNATURES COMPLETED

REVISIONS							SHEET NO.
NO.	BY:	DATE:	NO.	BY:	DATE:		S-16
1			3				TOTAL SHEETS
2			4				18

DRAWN BY :	W. B. ALLEN	DATE :	12/18
CHECKED BY :	G. F. WILSON	DATE :	4/19
DESIGN ENGINEER OF RECORD:	G. F. WILSON	DATE :	5/21

4/26/2021 10:11:36 AM R:\Structures\B6001_SMU_RR_50006B.dgn

DocuSign Envelope ID: FE584E6F-C9DA-48A2-A14A-7A0A0AE30F04

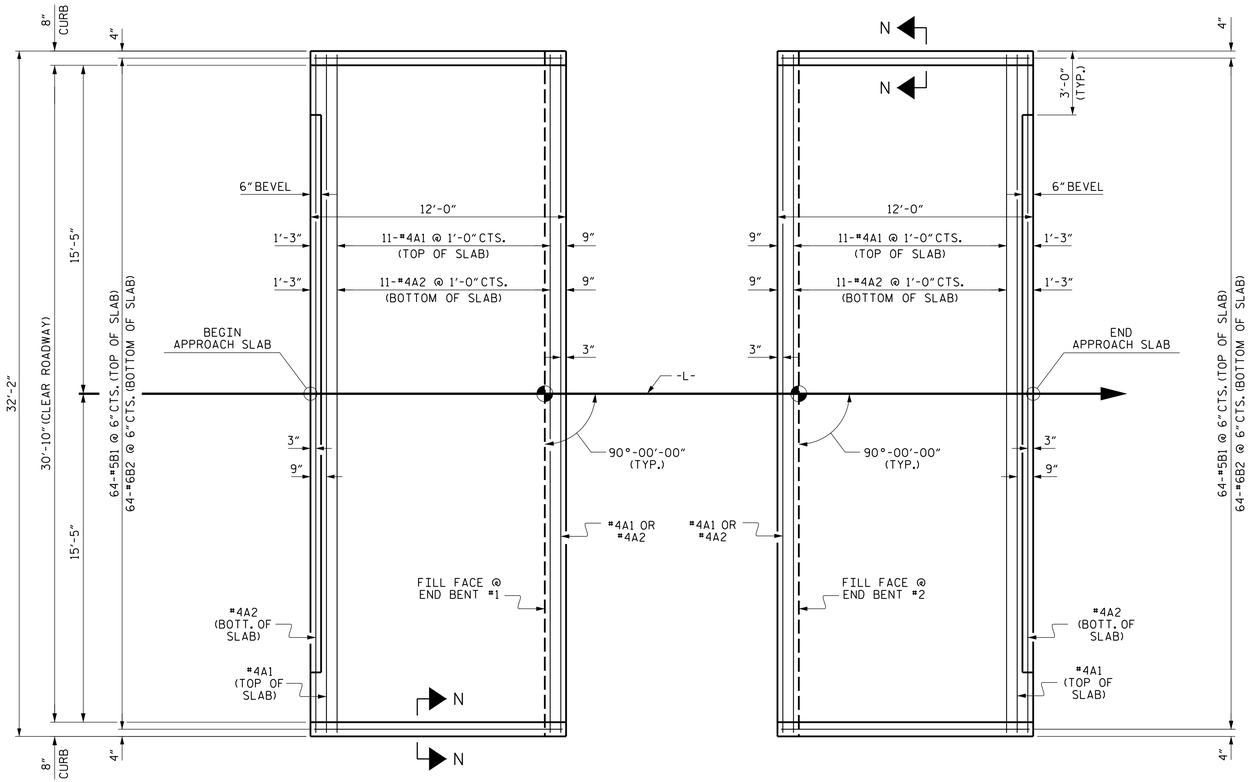

PLAN @ END BENT #1

PLAN @ END BENT #2

DIMENSIONS SHOWN ARE TYPICAL FOR BOTH APPROACH SLABS

NOTES

FOR BRIDGE APPROACH FILL INCLUDING GEOTEXTILE, 4"Ø DRAINAGE PIPE, AND SELECT MATERIAL BACKFILL, SEE ROADWAY PLANS.

GEOTEXTILE SHALL BE TYPE 1 IN ACCORDANCE WITH THE STANDARD SPECIFICATIONS SECTION 1056.

SELECT MATERIAL BACKFILL (CLASS V OR CLASS VI) SHALL BE IN ACCORDANCE WITH STANDARD SPECIFICATIONS SECTION 1016.

SELECT MATERIAL BACKFILL IS TO BE CONTINUOUS ALONG FILL FACE OF BACKWALL FROM OUTSIDE EDGE TO OUTSIDE EDGE OF APPROACH SLAB.

FOR THE 4"Ø DRAINAGE PIPE OUTLET(S), SEE ROADWAY STANDARD DRAWINGS.

AREA BETWEEN THE WINGWALL AND APPROACH SLAB SHALL BE GRADED TO DRAIN THE WATER AWAY FROM THE FILL FACE OF THE BRIDGE AND SHALL BE PAVED. SEE ROADWAY PLANS.

APPROACH SLAB GROOVING IS NOT REQUIRED.

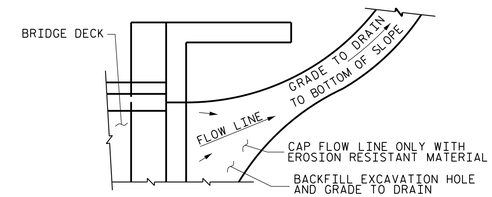

NOTE: IF THE APPROACH SLAB IS NOT CONSTRUCTED IMMEDIATELY AFTER THE BACKFILLING OF THE END BENT EXCAVATION, GRADE TO DRAIN TO THE BOTTOM OF THE SLOPE AND PROVIDE EROSION RESISTANT MATERIAL, SUCH AS FIBERGLASS ROVING OR AS DIRECTED BY THE ENGINEER TO PREVENT SOIL EROSION AND TO PROTECT THE AREA ADJACENT TO THE STRUCTURE. THE CONTRACTOR WILL BE REQUIRED TO REMOVE THESE MATERIALS PRIOR TO CONSTRUCTION OF THE APPROACH SLAB.

BILL OF MATERIAL

APPROACH SLAB AT EB #1

BAR	NO.	SIZE	TYPE	LENGTH	WEIGHT
* A1	13	#4	STR	31'-10"	276
A2	13	#4	STR	31'-10"	276
* B1	64	#5	STR	11'-2"	745
B2	64	#6	STR	11'-8"	1121
REINFORCING STEEL				LBS.	1397
* EPOXY COATED REINFORCING STEEL				LBS.	1021
CLASS AA CONCRETE				C. Y.	18.4

APPROACH SLAB AT EB #2

BAR	NO.	SIZE	TYPE	LENGTH	WEIGHT
* A1	13	#4	STR	31'-10"	276
A2	13	#4	STR	31'-10"	276
* B1	64	#5	STR	11'-2"	745
B2	64	#6	STR	11'-8"	1121
REINFORCING STEEL				LBS.	1397
* EPOXY COATED REINFORCING STEEL				LBS.	1021
CLASS AA CONCRETE				C. Y.	18.4

TEMPORARY DRAINAGE DETAIL

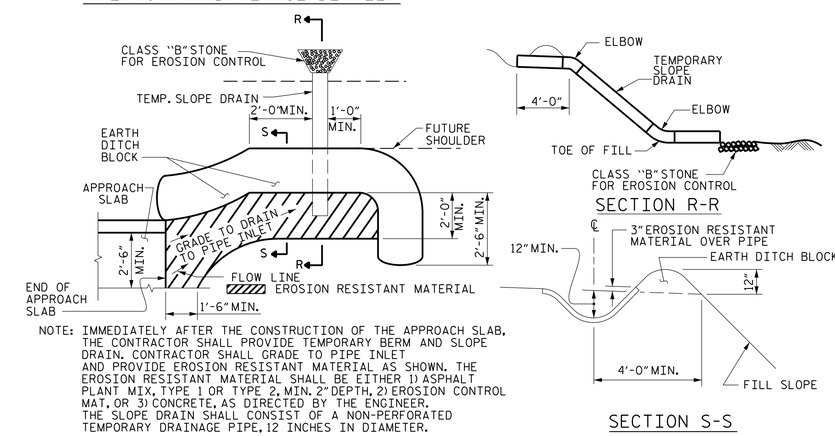

NOTE: IMMEDIATELY AFTER THE CONSTRUCTION OF THE APPROACH SLAB, THE CONTRACTOR SHALL PROVIDE TEMPORARY BERM AND SLOPE DRAIN. CONTRACTOR SHALL GRADE TO PIPE INLET AND PROVIDE EROSION RESISTANT MATERIAL AS SHOWN. THE EROSION RESISTANT MATERIAL SHALL BE EITHER 1) ASPHALT PLANT MIX, TYPE 1 OR TYPE 2, MIN. 2" DEPTH, 2) EROSION CONTROL MAT, OR 3) CONCRETE, AS DIRECTED BY THE ENGINEER. THE SLOPE DRAIN SHALL CONSIST OF A NON-PERFORATED TEMPORARY DRAINAGE PIPE, 12 INCHES IN DIAMETER.

PLAN VIEW

TEMPORARY BERM AND SLOPE DRAIN DETAILS

(TO BE USED WHEN SHOULDER BERM GUTTER IS REQUIRED)

SPLICE LENGTHS		
BAR SIZE	EPOXY COATED	UNCOATED
#4	1'-11"	1'-7"
#5	2'-5"	2'-0"
#6	3'-7"	2'-5"

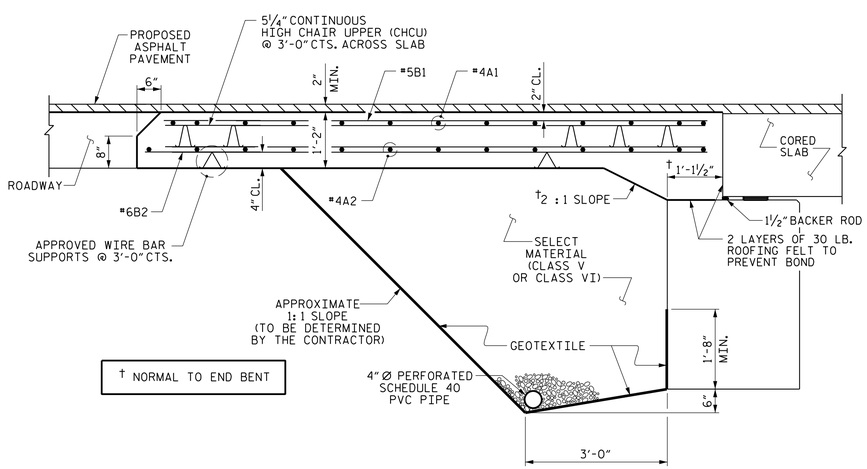

† NORMAL TO END BENT

SECTION THRU SLAB

(TYPE II - MODIFIED APPROACH FILL)

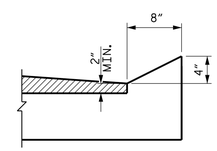

SECTION N-N

CURB DETAILS

PROJECT NO. B-6001

JOHNSTON COUNTY

STATION: 15+71.00 -L-

PLANS PREPARED BY:

NV5 ENGINEERS & CONSULTANTS, INC.
3300 REGENCY PARKWAY, SUITE 100
CARY, NC 27518
P: 919.851.1912 www.NV5.com
NC License # F-1333
formerly CALYX Engineers & Consultants

DOCUMENT NOT CONSIDERED FINAL UNLESS ALL SIGNATURES COMPLETED

THIS STANDARD DRAWING REVIEWED & ADOPTED FOR USE AT THE REFERENCED LOCATION BY THE UNDERSIGNED:

NORTH CAROLINA PROFESSIONAL SEAL ENGINEER GWENDOLEN F. WILSON

DocuSigned by: Gwendolen Wilson
DocuSign Envelope ID: 4B4B4C2-A0B3A2B2
6/2/2021

STATE OF NORTH CAROLINA
DEPARTMENT OF TRANSPORTATION
RALEIGH

STANDARD
BRIDGE APPROACH SLAB
FOR PRESTRESSED CONCRETE
CORED SLAB UNIT
(SUB-REGIONAL TIER)
90° SKEW

REVISIONS							SHEET NO.
NO.	BY:	DATE:	NO.	BY:	DATE:		S-17
1			3				TOTAL SHEETS
2			4				18

ASSEMBLED BY :	W. B. ALLEN	DATE :	1/21
CHECKED BY :	G. F. WILSON	DATE :	X/21
DRAWN BY : SHS/MAA 5-09		REV. 12-17	MAA/THC
CHECKED BY : BCH 5-09		REV. 08-19	BNB/THC

STD. NO. BAS_33_90S

4/26/2021 10:13:37 AM R:\Structures\B6001_SMU_AS_500068.dgn

DocuSign Envelope ID: FE584E6F-C9DA-48A2-A14A-7A0A0AE30F04

STANDARD NOTES

DESIGN DATA:

SPECIFICATIONS	A.A.S.H.T.O. (CURRENT)
LIVE LOAD	SEE PLANS
IMPACT ALLOWANCE	SEE A.A.S.H.T.O.
STRESS IN EXTREME FIBER OF STRUCTURAL STEEL - AASHTO M270 GRADE 36	20,000 LBS. PER SQ. IN.
- AASHTO M270 GRADE 50W	27,000 LBS. PER SQ. IN.
- AASHTO M270 GRADE 50	27,000 LBS. PER SQ. IN.
REINFORCING STEEL IN TENSION - GRADE 60	24,000 LBS. PER SQ. IN.
CONCRETE IN COMPRESSION	1,200 LBS. PER SQ. IN.
CONCRETE IN SHEAR	SEE A.A.S.H.T.O.
STRUCTURAL TIMBER - TREATED OR UNTREATED EXTREME FIBER STRESS	1,800 LBS. PER SQ. IN.
COMPRESSION PERPENDICULAR TO GRAIN OF TIMBER	375 LBS. PER SQ. IN.
EQUIVALENT FLUID PRESSURE OF EARTH	30 LBS. PER CU. FT. (MINIMUM)

MATERIAL AND WORKMANSHIP:

EXCEPT AS MAY OTHERWISE BE SPECIFIED ON PLANS OR IN THE SPECIAL PROVISIONS, ALL MATERIAL AND WORKMANSHIP SHALL BE IN ACCORDANCE WITH THE 2018 "STANDARD SPECIFICATIONS FOR ROADS AND STRUCTURES" OF THE N. C. DEPARTMENT OF TRANSPORTATION.

STEEL SHEET PILING FOR PERMANENT OR TEMPORARY APPLICATIONS SHALL BE HOT ROLLED.

CONCRETE:

UNLESS OTHERWISE REQUIRED ON PLANS, CLASS A CONCRETE SHALL BE USED FOR ALL PORTIONS OF ALL STRUCTURES WITH THE EXCEPTION THAT: CLASS AA CONCRETE SHALL BE USED IN BRIDGE SUPERSTRUCTURES, ABUTMENT BACKWALLS, AND APPROACH SLABS; AND CLASS B CONCRETE SHALL BE USED FOR SLOPE PROTECTION AND RIP RAP.

CONCRETE CHAMFERS:

UNLESS OTHERWISE NOTED ON THE PLANS, ALL EXPOSED CORNERS ON STRUCTURES SHALL BE CHAMFERED ¾" WITH THE FOLLOWING EXCEPTIONS: TOP CORNERS OF CURBS MAY BE ROUNDED TO 1½" RADIUS WHICH IS BUILT INTO CURB FORMS; CORNERS OF TRANSVERSE FLOOR EXPANSION JOINTS SHALL BE ROUNDED WITH A ¼" FINISHING TOOL UNLESS OTHERWISE REQUIRED ON PLANS; AND CORNERS OF EXPANSION JOINTS IN THE ROADWAY FACES AND TOPS OF CURBS AND SIDEWALKS SHALL BE ROUNDED TO A ¼" RADIUS WITH A FINISHING STONE OR TOOL UNLESS OTHERWISE REQUIRED ON PLANS.

DOWELS:

DOWELS WHEN INDICATED ON PLANS AS FOR CULVERT EXTENSIONS, SHALL BE EMBEDDED AT LEAST 12" INTO THE OLD CONCRETE AND GROUTED INTO PLACE WITH 1:2 CEMENT MORTAR.

ALLOWANCE FOR DEAD LOAD DEFLECTION, SETTLEMENT, ETC. IN CASTING SUPERSTRUCTURES:

BRIDGES SHALL BE BUILT ON THE GRADE OR VERTICAL CURVE SHOWN ON PLANS. SLABS, CURBS AND PARAPETS SHALL CONFORM TO THE GRADE OR CURVE.

ALL DIMENSIONS WHICH ARE GIVEN IN SECTION AND ARE AFFECTED BY DEAD LOAD DEFLECTIONS ARE DIMENSIONS AT CENTER LINE OF BEARING UNLESS OTHERWISE NOTED ON PLANS. IN SETTING FORMS FOR STEEL BEAM BRIDGES AND PRESTRESSED CONCRETE GIRDER BRIDGES, ADJUSTMENTS SHALL BE MADE DUE TO THE DEAD LOAD DEFLECTIONS FOR THE ELEVATIONS SHOWN. WHERE BLOCKS ARE SHOWN OVER BEAMS FOR BUILDING UP TO THE SLAB, THE VERTICAL DIMENSIONS OF THE BLOCKS SHALL BE ADJUSTED BETWEEN BEARINGS TO COMPENSATE FOR DEAD LOAD DEFLECTIONS, VERTICAL CURVE ORDINATE, AND ACTUAL BEAM CAMBER. WHERE BOTTOM OF SLAB IS IN LINE WITH BOTTOM OF TOP FLANGES, DEPTH OF SLAB BETWEEN BEARINGS SHALL BE ADJUSTED TO COMPENSATE FOR DEAD LOAD DEFLECTION, VERTICAL CURVE ORDINATE, AND ACTUAL BEAM CAMBER.

IN SETTING FALSEWORK AND FORMS FOR REINFORCED CONCRETE SPANS, AN ALLOWANCE SHALL BE MADE FOR DEAD LOAD DEFLECTIONS, SETTLEMENT OF FALSEWORK, AND PERMANENT CAMBER WHICH SHALL BE PROVIDED FOR IN ADDITION TO THE ELEVATIONS SHOWN. AFTER REMOVAL OF THE FALSEWORK, THE FINISHED STRUCTURES SHALL CONFORM TO THE PROFILE AND ELEVATIONS SHOWN ON THE PLANS AND CONSTRUCTION ELEVATIONS FURNISHED BY THE ENGINEER.

DETAILED DRAWINGS FOR FALSEWORK OR FORMS FOR BRIDGE SUPERSTRUCTURE AND ANY STRUCTURE OR PARTS OF A STRUCTURE AS NOTED ON THE PLANS SHALL BE SUBMITTED TO THE ENGINEER FOR APPROVAL BEFORE CONSTRUCTION OF THE FALSEWORK OR FORMS IS STARTED.

REINFORCING STEEL:

ALL REINFORCING STEEL SHALL BE DEFORMED. DIMENSIONS RELATIVE TO PLACEMENT OF REINFORCING ARE TO CENTERS OF BARS UNLESS OTHERWISE INDICATED IN THE PLANS. DIMENSIONS ON BAR DETAILS ARE TO CENTERS OF BARS OR ARE OUT TO OUT AS INDICATED ON PLANS.

WIRE BAR SUPPORTS SHALL BE PROVIDED FOR REINFORCING STEEL WHERE INDICATED ON THE PLANS. WHEN BAR SUPPORT PIECES ARE PLACED IN CONTINUOUS LINES, THEY SHALL BE SO PLACED THAT THE ENDS OF THE SUPPORTING WIRES SHALL BE LAPPED TO LOCK LEGS ON ADJOINING PIECES.

STRUCTURAL STEEL:

AT THE CONTRACTOR'S OPTION, HE MAY SUBSTITUTE ⅞" Ø SHEAR STUDS FOR THE ¾" Ø STUDS SPECIFIED ON THE PLANS. THIS SUBSTITUTION SHALL BE MADE AT THE RATE OF 3 - ⅞" Ø STUDS FOR 4 - ¾" Ø STUDS, AND STUD SPACING CHANGES SHALL BE MADE AS NECESSARY TO PROVIDE THE SAME EQUIVALENT NUMBER OF ⅞" Ø STUDS ALONG THE BEAM AS SHOWN FOR ¾" Ø STUDS BASED ON THE RATIO OF 3 - ⅞" Ø STUDS FOR 4 - ¾" Ø STUDS. STUDS OF THE LENGTH SPECIFIED ON THE PLANS MUST BE PROVIDED. THE MAXIMUM SPACING SHALL BE 2'-0".

EXCEPT AT THE INTERIOR SUPPORTS OF CONTINUOUS BEAMS WHERE THE COVER PLATE IS IN CONTACT WITH BEARING PLATE, THE CONTRACTOR MAY, AT HIS OPTION, SUBSTITUTE FOR THE COVER PLATES DESIGNATED ON THE PLANS COVER PLATES OF THE EQUIVALENT AREA PROVIDED THESE PLATES ARE AT LEAST 5/16" IN THICKNESS AND DO NOT EXCEED A WIDTH EQUAL TO THE FLANGE WIDTH LESS 2" OR A THICKNESS EQUAL TO 2 TIMES THE FLANGE THICKNESS. THE SIZE OF FILLET WELDS SHALL CONFORM TO THE REQUIREMENTS OF THE CURRENT ANSI/AASHTO/AWS "BRIDGE WELDING CODE". ELECTROSLAG WELDING WILL NOT BE PERMITTED.

WITH THE SOLE EXCEPTION OF EDGES AT SURFACES WHICH BEAR ON OTHER SURFACES, ALL SHARP EDGES AND ENDS OF SHAPES AND PLATES SHALL BE SLIGHTLY ROUNDED BY SUITABLE MEANS TO A RADIUS OF APPROXIMATELY 1/16 INCH OR EQUIVALENT FLAT SURFACE AT A SUITABLE ANGLE PRIOR TO PAINTING, GALVANIZING, OR METALLIZING.

HANDRAILS AND POSTS:

METAL STANDARDS AND FACES OF THE CONCRETE END POSTS FOR THE METAL RAIL SHALL BE SET NORMAL TO THE GRADE OF THE CURB, UNLESS OTHERWISE SHOWN ON PLANS. THE METAL RAIL AND TOPS OF CONCRETE POSTS USED WITH THE ALUMINUM RAIL SHALL BE BUILT PARALLEL TO THE GRADE OF THE CURB.

METAL HANDRAILS SHALL BE IN ACCORDANCE WITH THE PLANS. RAILS SHALL BE AS MANUFACTURED FOR BRIDGE RAILING. CASTINGS SHALL BE OF A UNIFORM APPEARANCE. FINS AND OTHER DEFORMATIONS RESULTING FROM CASTING OR OTHERWISE SHALL BE REMOVED IN A MANNER SO THAT A UNIFORM COLORING OF THE COMPLETED CASTING SHALL BE OBTAINED. CASTINGS WITH DISCOLORATIONS OR OF NON-UNIFORM COLORING WILL NOT BE ACCEPTED. CERTIFIED MILL REPORTS ARE REQUIRED FOR METAL RAILS AND POSTS.

SPECIAL NOTES:

GENERALLY, IN CASE OF DISCREPANCY, THIS STANDARD SHEET OF NOTES SHALL GOVERN OVER THE SPECIFICATIONS, BUT THE REMAINDER OF THE PLANS SHALL GOVERN OVER NOTES HEREON, AND SPECIAL PROVISIONS SHALL GOVERN OVER ALL. SEE SPECIFICATIONS ARTICLE 105-4.