This electronic collection of documents is provided for the convenience of the user and is Not a Certified Document –

The documents contained herein were originally issued and sealed by the individuals whose names and license numbers appear on each page, on the dates appearing with their signature on that page.
This file or an individual page shall not be considered a certified document.

DocuSign Envelope ID: 9214F42C-8621-415C-951F-C74B1F69053A

PROJECT: 17BP.4.R.110

CONTRACT: DD00313

See Sheet 1-A For Index of Sheets
See Sheet 1-B For Coventional Symbol Sheet
See Sheet 1-C For SAurvey Comtrol Sheet

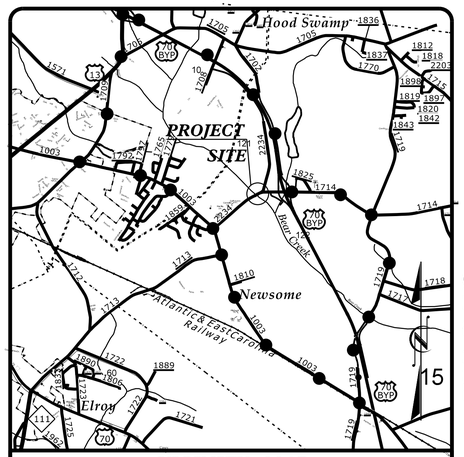

VICINITY MAP

OFF-SITE DETOUR

FINAL PLANS

STATE OF NORTH CAROLINA
DIVISION OF HIGHWAYS

WAYNE COUNTY

STATE	STATE PROJECT REFERENCE NO.	SHEET NO.	TOTAL SHEETS
N.C.	17BP.4.R.110	1	

STATE PROJ. NO.	F. A. PROJ. NO.	DESCRIPTION
17BP.4.R.110		PE
SS-4904EV WBS 48481.2.1		ROW/UTIL.
17BP.4.R.110		FINAL

LOCATION: REPLACEMENT OF BRIDGE NO. 950121 OVER BEAR CREEK ON SR 2234 /SR 1714 (MARK EDWARDS RD./PARKSTOWN RD.).

TYPE OF WORK: GRADING, DRAINAGE, PAVING, STRUCTURE.

NAD 83/ NSRS 2011

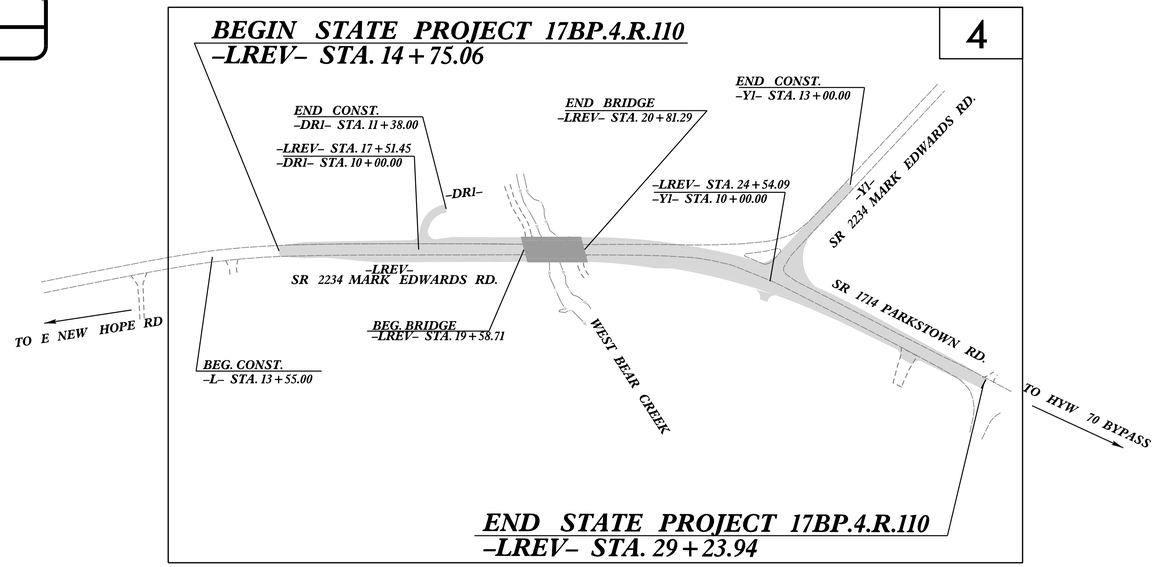

THIS IS A NON CONTROLLED-ACCESS PROJECT.

DOCUMENT NOT CONSIDERED FINAL UNLESS ALL SIGNATURES COMPLETED

GRAPHIC SCALES

50 25 0 50 100
PLANS

50 25 0 50 100
PROFILE (HORIZONTAL)

10 5 0 10 20
PROFILE (VERTICAL)

DESIGN DATA

ADT 2019 = 3,300
ADT 2040 = 5,200
K = 12 %
D = 70 %
T = 7 % *
V = 60 MPH
* TTST = 3% DUAL = 4%
FUNC. CLASS = MINOR ARTERIAL

PROJECT LENGTH

LENGTH ROADWAY TIP PROJECT 17BP.4.R.110 = 0.252 MILES
LENGTH STRUCTURE TIP PROJECT 17BP.4.R.110 = 0.022 MILES

TOTAL LENGTH TIP PROJECT 17BP.4.R.110 = 0.274 MILES

Prepared in the Office of:
WETHERILL ENGINEERING
1223 Jones Franklin Rd. Raleigh, N.C. 27606
License No. F-0377
Bus: 919.851.8077 Fax: 919.851.8107

Prepared for:
DIVISION OF HIGHWAYS DIVISION 4
509 Ward Boulevard
Wilson NC, 27895

2018 STANDARD SPECIFICATIONS

RIGHT OF WAY DATE: MAY 2, 2019

LETTING DATE: OCTOBER 22, 2019

NCDOT CONTACT:

GREG PURVIS, PE
PROJECT ENGINEER

ROBERT O'DELL JR.
PROJECT DESIGN ENGINEER

RACHEL EVANS, PE
DIVISION PROJECT MANAGER

HYDRAULICS ENGINEER 9/24/2019
DocuSigned by: Harminder Singh
NORTH CAROLINA PROFESSIONAL SEAL 044561 ENGINEER HARMINDER SINGH

ROADWAY DESIGN ENGINEER 9/24/2019
DocuSigned by: Greg S. Purvis
NORTH CAROLINA PROFESSIONAL SEAL 022999 ENGINEER GREG S. PURVIS

STATE OF NORTH CAROLINA DEPARTMENT OF TRANSPORTATION

9/16/2019
::\17BP.4.R.110_rdy_psh_01_TSH.dgn
USER:RODell

DocuSign Envelope ID: 9214F42C-8621-415C-951F-C74B1F69053A

PROJECT REFERENCE NO.	SHEET NO.
17BP.4.R.110	1A

ROADWAY DESIGN ENGINEER
9/24/2019
NORTH CAROLINA PROFESSIONAL SEAL 022999 ENGINEER GREG S. PURNIS
DocuSigned by: Greg S. Purnis

DOCUMENT NOT CONSIDERED FINAL UNLESS ALL SIGNATURES COMPLETED

WETHERILL ENGINEERING
1223 Jones Franklin Rd.
Raleigh, N.C. 27606
License No. F-0377
Bus: 919 851 8077
Fax: 919 851 8107
TRANSPORTATION PLANNING/DESIGN - BRIDGE/STRUCTURE DESIGN
CIVIL/SITE DESIGN - GIS/GPS - CONSTRUCTION OBSERVATION

EFF. 01–16–2018
REV.

SHEET NUMBER	SHEET
1	TITLE SHEET
1A	INDEX OF SHEETS, GENERAL NOTES, AND STANDARD DRAWINGS
1B	CONVENTIONAL SYMBOLS
2A–1 THRU 2A–2	PAVEMENT SCHEDULE AND TYPICAL SECTIONS
2C–1 THRU 2C–2	SPECIAL DETAILS
3B–1	ROADWAY SUMMARIES
3G–1	GEOTECHNICAL SUMMARIES
4	PLAN SHEET
5	PROFILE SHEET
RW–01–1 THRU RW–03E–2	SURVEY CONTROL SHEETS
TMP–1	TRAFFIC MANAGEMENT PLANS
EC–1 THRU EC–5	EROSION CONTROL PLANS
RF–1	REFORESTATION PLANS
UO–1 THRU U0–2	UTILITIES BY OTHERS PLANS
X–1A	CROSS–SECTION INDEX SHEET
X–1B	CROSS–SECTION SUMMARY SHEET
X–1 THRU X–7	CROSS–SECTIONS SHEETS
S–1 THRU S–24	STRUCTURE PLANS

2018 ROADWAY ENGLISH STANDARD DRAWINGS

The following Roadway Standards as appear in "Roadway Standard Drawings" Highway Design Branch – N. C. Department of Transportation – Raleigh, N. C., Dated January, 2018 are applicable to this project and by reference hereby are considered a part of these plans:

STD.NO.	TITLE
DIVISION 2 – EARTHWORK	
200.02	Method of Clearing – Method II
225.04	Method of Obtaining Superelevation – Two Lane Pavement
DIVISION 4 – MAJOR STRUCTURES	
422.02	Bridge Approach Fills – Type II Modiefied Approach Fill
DIVISION 8 – INCIDENTALS	
815.02	Subsurface Drain
840.18	Concrete Grated Drop Inlet Type 'B' – 12" thru 36" Pipe
840.19	Concrete Grated Drop Inlet Type 'D' – 12" thru 36" Pipe
840.24	Frames and Narrow Slot Sag Grates
840.26	Brick Grated Drop Inlet Type 'A' – 12" thru 72" Pipe
840.27	Brick Grated Drop Inlet Type 'B' – 12" thru 36" Pipe
848.04	Street Turnout
862.01	Guardrail Placement
862.02	Guardrail Installation
862.03	Structure Anchor Units
876.02	Guide for Rip Rap at Pipe Outlets

GENERAL NOTES: 2018 SPECIFICATIONS
EFFECTIVE: 01–16–2018
REVISED:

GRADE LINE:
GRADING AND SURFACING:
THE GRADE LINES SHOWN DENOTE THE FINISHED ELEVATION OF THE PROPOSED SURFACING AT GRADE POINTS SHOWN ON THE TYPICAL SECTIONS. GRADE LINES MAY BE ADJUSTED AT THEIR BEGINNING AND ENDING AND AT STRUCTURES AS DIRECTED BY THE ENGINEER IN ORDER TO SECURE A PROPER TIE–IN.

GRADING:
THE GRADE LINES SHOWN DENOTE THE FINISHED ELEVATION OF THE PROPOSED OR FUTURE SURFACING AT GRADE POINTS SHOWN ON THE TYPICAL SECTIONS. GRADE LINES MAY BE ADJUSTED AT THEIR BEGINNING AND ENDING AND AT STRUCTURES AS DIRECTED BY THE ENGINEER IN ORDER TO SECURE A PROPER TIE–IN.

CLEARING:
CLEARING ON THIS PROJECT SHALL BE PERFORMED TO THE LIMITS ESTABLISHED BY METHOD II.

SUPERELEVATION:
ALL CURVES ON THIS PROJECT SHALL BE SUPERELEVATED IN ACCORDANCE WITH STD. NO. 225.05 USING THE RATE OF SUPERELEVATION AND RUNOFF SHOWN ON THE PLANS. SUPERELEVATION IS TO BE REVOLVED ABOUT THE GRADE POINTS SHOWN ON THE TYPICAL SECTIONS.

SIDE ROADS:
THE CONTRACTOR WILL BE REQUIRED TO DO ALL NECESSARY WORK TO PROVIDE SUITABLE CONNECTIONS WITH ALL ROADS, STREETS, AND DRIVES ENTERING THIS PROJECT. THIS WORK WILL BE PAID FOR AT THE CONTRACT UNIT PRICE FOR THE PARTICULAR ITEMS INVOLVED.

UNDERDRAINS:
UNDERDRAINS SHALL BE CONSTRUCTED IN ACCORDANCE WITH STD. NO. 815.03 AT LOCATIONS DIRECTED BY THE ENGINEER.

GUARDRAIL:
THE GUARDRAIL LOCATIONS SHOWN ON THE PLANS MAY BE ADJUSTED DURING CONSTRUCTION AS DIRECTED BY THE ENGINEER. THE CONTRACTOR SHOULD CONSULT WITH THE ENGINEER PRIOR TO ORDERING GUARDRAIL MATERIAL.

SUBSURFACE PLANS:
NO SUBSURFACE PLANS ARE AVAILABLE ON THIS PROJECT. THE CONTRACTOR SHOULD MAKE HIS OWN INVESTIGATION AS TO THE SUBSURFACE CONDITIONS.

UTILITIES:
UTILITY OWNERS ON THIS PROJECT ARE DUKE ENERGY, AT&T, CHARTER/SPECTRUM AND WAYNE WATER DISTRICT.
ANY RELOCATION OF EXISTING UTILITIES WILL BE ACCOMPLISHED BY OTHERS, EXCEPT AS SHOWN ON THE PLANS.

6/2/99
9/16/2019
17BP.4.R.110_rdy_psh_01A_GN.dgn
USER:rdp.de1

12/2/2016

PROJECT REFERENCE NO.	SHEET NO.
17BP.4.R.110	1B

STATE OF NORTH CAROLINA, DIVISION OF HIGHWAYS

CONVENTIONAL PLAN SHEET SYMBOLS

Note: Not to Scale

**S.U.E. = Subsurface Utility Engineering*

BOUNDARIES AND PROPERTY:

- State Line
- County Line
- Township Line
- City Line
- Reservation Line
- Property Line
- Existing Iron Pin — EIP
- Computed Property Corner
- Property Monument — ECM
- Parcel/Sequence Number — 123
- Existing Fence Line
- Proposed Woven Wire Fence
- Proposed Chain Link Fence
- Proposed Barbed Wire Fence
- Existing Wetland Boundary — WLB
- Proposed Wetland Boundary — WLB
- Existing Endangered Animal Boundary — EAB
- Existing Endangered Plant Boundary — EPB
- Existing Historic Property Boundary — HPB
- Known Contamination Area: Soil — S
- Potential Contamination Area: Soil — S
- Known Contamination Area: Water — W
- Potential Contamination Area: Water — W
- Contaminated Site: Known or Potential

BUILDINGS AND OTHER CULTURE:

- Gas Pump Vent or U/G Tank Cap
- Sign — S
- Well — W
- Small Mine
- Foundation
- Area Outline
- Cemetery
- Building
- School
- Church
- Dam

HYDROLOGY:

- Stream or Body of Water
- Hydro, Pool or Reservoir
- Jurisdictional Stream — JS
- Buffer Zone 1 — BZ 1
- Buffer Zone 2 — BZ 2
- Flow Arrow
- Disappearing Stream
- Spring
- Wetland
- Proposed Lateral, Tail, Head Ditch — FLOW
- False Sump

RAILROADS:

- Standard Gauge — CSX TRANSPORTATION
- RR Signal Milepost — MILEPOST 35
- Switch — SWITCH
- RR Abandoned
- RR Dismantled

RIGHT OF WAY & PROJECT CONTROL:

- Secondary Horiz and Vert Control Point
- Primary Horiz Control Point
- Primary Horiz and Vert Control Point
- Exist Permanent Easment Pin and Cap
- New Permanent Easement Pin and Cap
- Vertical Benchmark
- Existing Right of Way Marker
- Existing Right of Way Line
- New Right of Way Line — RW
- New Right of Way Line with Pin and Cap — RW
- New Right of Way Line with Concrete or Granite R/W Marker — RW
- New Control of Access Line with Concrete C/A Marker — CA
- Existing Control of Access — CA
- New Control of Access — CA
- Existing Easement Line — E
- New Temporary Construction Easement — E
- New Temporary Drainage Easement — TDE
- New Permanent Drainage Easement — PDE
- New Permanent Drainage / Utility Easement — DUE
- New Permanent Utility Easement — PUE
- New Temporary Utility Easement — TUE
- New Aerial Utility Easement — AUE

ROADS AND RELATED FEATURES:

- Existing Edge of Pavement
- Existing Curb
- Proposed Slope Stakes Cut — C
- Proposed Slope Stakes Fill — F
- Proposed Curb Ramp — CR
- Existing Metal Guardrail
- Proposed Guardrail
- Existing Cable Guiderail
- Proposed Cable Guiderail
- Equality Symbol
- Pavement Removal

VEGETATION:

- Single Tree
- Single Shrub
- Hedge
- Woods Line
- Orchard
- Vineyard — Vineyard

EXISTING STRUCTURES:

MAJOR:

- Bridge, Tunnel or Box Culvert — CONC
- Bridge Wing Wall, Head Wall and End Wall — CONC WW

MINOR:

- Head and End Wall — CONC HW
- Pipe Culvert
- Footbridge
- Drainage Box: Catch Basin, DI or JB — CB
- Paved Ditch Gutter
- Storm Sewer Manhole — S
- Storm Sewer — S

UTILITIES:

POWER:

- Existing Power Pole
- Proposed Power Pole
- Existing Joint Use Pole
- Proposed Joint Use Pole
- Power Manhole — P
- Power Line Tower
- Power Transformer
- U/G Power Cable Hand Hole
- H-Frame Pole
- U/G Power Line LOS B (S.U.E.*) — P
- U/G Power Line LOS C (S.U.E.*) — P
- U/G Power Line LOS D (S.U.E.*) — P

TELEPHONE:

- Existing Telephone Pole
- Proposed Telephone Pole
- Telephone Manhole — T
- Telephone Pedestal — T
- Telephone Cell Tower
- U/G Telephone Cable Hand Hole
- U/G Telephone Cable LOS B (S.U.E.*) — T
- U/G Telephone Cable LOS C (S.U.E.*) — T
- U/G Telephone Cable LOS D (S.U.E.*) — T
- U/G Telephone Conduit LOS B (S.U.E.*) — TC
- U/G Telephone Conduit LOS C (S.U.E.*) — TC
- U/G Telephone Conduit LOS D (S.U.E.*) — TC
- U/G Fiber Optics Cable LOS B (S.U.E.*) — T FO
- U/G Fiber Optics Cable LOS C (S.U.E.*) — T FO
- U/G Fiber Optics Cable LOS D (S.U.E.*) — T FO

WATER:

- Water Manhole — W
- Water Meter
- Water Valve
- Water Hydrant
- U/G Water Line LOS B (S.U.E*)
- U/G Water Line LOS C (S.U.E*)
- U/G Water Line LOS D (S.U.E*)
- Above Ground Water Line — A/G Water

TV:

- TV Pedestal — C
- TV Tower
- U/G TV Cable Hand Hole — HH
- U/G TV Cable LOS B (S.U.E.*) — TV
- U/G TV Cable LOS C (S.U.E.*) — TV
- U/G TV Cable LOS D (S.U.E.*) — TV
- U/G Fiber Optic Cable LOS B (S.U.E.*) — TV FO
- U/G Fiber Optic Cable LOS C (S.U.E.*) — TV FO
- U/G Fiber Optic Cable LOS D (S.U.E.*) — TV FO

GAS:

- Gas Valve
- Gas Meter
- U/G Gas Line LOS B (S.U.E.*) — G
- U/G Gas Line LOS C (S.U.E.*) — G
- U/G Gas Line LOS D (S.U.E.*) — G
- Above Ground Gas Line — A/G Gas

SANITARY SEWER:

- Sanitary Sewer Manhole
- Sanitary Sewer Cleanout
- U/G Sanitary Sewer Line — SS
- Above Ground Sanitary Sewer — A/G Sanitary Sewer
- SS Forced Main Line LOS B (S.U.E.*) — FSS
- SS Forced Main Line LOS C (S.U.E.*) — FSS
- SS Forced Main Line LOS D (S.U.E.*) — FSS

MISCELLANEOUS:

- Utility Pole
- Utility Pole with Base
- Utility Located Object
- Utility Traffic Signal Box — S
- Utility Unknown U/G Line LOS B (S.U.E.*) — ?UTL
- U/G Tank; Water, Gas, Oil
- Underground Storage Tank, Approx. Loc. — UST
- A/G Tank; Water, Gas, Oil
- Geoenvironmental Boring
- U/G Test Hole LOS A (S.U.E.*)
- Abandoned According to Utility Records — AATUR
- End of Information — E.O.I.

DocuSign Envelope ID: 9214F42C-8621-415C-951F-C74B1F69053A

PROJECT REFERENCE NO.	SHEET NO.
17BP.4.R.110	2A-1

ROADWAY DESIGN ENGINEER
5/24/2019
NORTH CAROLINA PROFESSIONAL SEAL 022999 ENGINEER GREG S. PURVIS
DocuSigned by: Greg S. Purvis

PAVEMENT DESIGN ENGINEER
5/24/2019
NORTH CAROLINA PROFESSIONAL SEAL 037392 ENGINEER RACHEL C. EVANS
DocuSigned by: Rachel C. Evans

DOCUMENT NOT CONSIDERED FINAL UNLESS ALL SIGNATURES COMPLETED

WETHERILL ENGINEERING
1223 Jones Franklin Rd.
Raleigh, N.C. 27606
License No. F-0377
Bus: 919 851 8077
Fax: 919 851 8107
TRANSPORTATION PLANNING/DESIGN - BRIDGE/STRUCTURE DESIGN
CIVIL/SITE DESIGN - GIS/GPS - CONSTRUCTION OBSERVATION

PAVEMENT SCHEDULE
(FINAL)

C1	PROP. APPROX. 3″ ASPHALT CONCRETE SURFACE COURSE, TYPE S9.5B, AT AN AVERAGE RATE OF 165 LBS. PER SQ. YD. IN EACH OF TWO LAYERS.
C2	PROP. VAR. DEPTH ASPHALT CONCRETE SURFACE COURSE, TYPE S9.5B, AT AN AVERAGE RATE OF 110 LBS. PER SQ. YD. PER 1″ DEPTH. TO BE PLACED IN LAYERS NOT TO EXCEED 2″ IN DEPTH.
D1	PROP. APPROX. 4″ ASPHALT CONCRETE INTERMEDIATE COURSE, TYPE I19.0C, AT AN AVERAGE RATE OF 456 LBS. PER SQ. YD.
D2	PROP. VAR. DEPTH ASPHALT CONCRETE INTERMEDIATE COURSE, TYPE I19.0C, AT AN AVERAGE RATE OF 114 LBS. PER SQ. YD. PER 1″ DEPTH. TO BE PLACED IN LAYERS NOT LESS THAN 2½″ IN DEPTH OR GREATER THAN 4″ IN DEPTH.
E1	PROP. APPROX. 4″ ASPHALT CONCRETE BASE COURSE, TYPE B25.0C, AT AN AVERAGE RATE OF 456 LBS. PER SQ. YD.
E2	PROP. VAR. DEPTH ASPHALT CONCRETE BASE COURSE, TYPE B25.0C, AT AN AVERAGE RATE OF 114 LBS. PER SQ. YD. PER 1″ DEPTH. TO BE PLACED IN LAYERS NOT LESS THAN 3″ IN DEPTH OR GREATER THAN 5½″ IN DEPTH.
J1	PROP. 6″ AGGREGATE BASE COURSE.
R1	PROP. SHOULDER BERM GUTTER.
T	EARTH MATERIAL.
U	EXISTING PAVEMENT.
V	MILLING BITUMINOUS PAVEMENT. (SEE MILLING DETAIL)
W	VARIABLE DEPTH ASPHALT PAVEMENT (SEE WEDGING DETAIL)

NOTE: PAVEMENT EDGE SLOPES ARE 1:1 UNLESS SHOWN OTHERWISE.

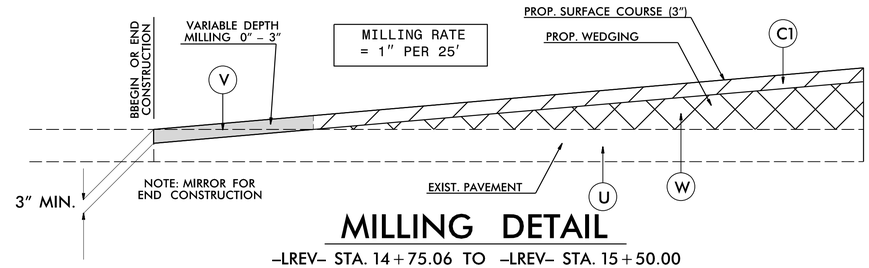

MILLING DETAIL

–LREV– STA. 14+75.06 TO –LREV– STA. 15+50.00
–LREV– STA. 27+50.00 TO –LREV– STA. 29+23.94
–Y1– STA. 12+00.00 TO –Y1– STA 13+00.00

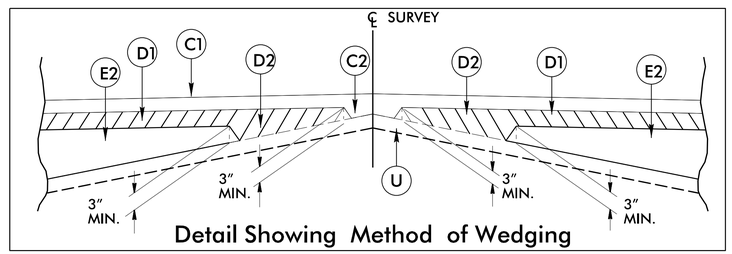

Detail Showing Method of Wedging

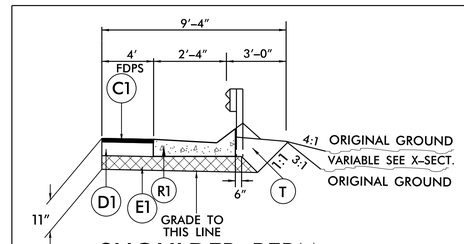

SHOULDER BERM GUTTER DETAIL

USE SHOULDER BERM GUTTER DETAIL IN CONJUNCTION WITH TYPICAL SECTIONS NO. 1 & 2:
–L– STA. 19+40.00 TO –L– STA. 19+57.91 RT.

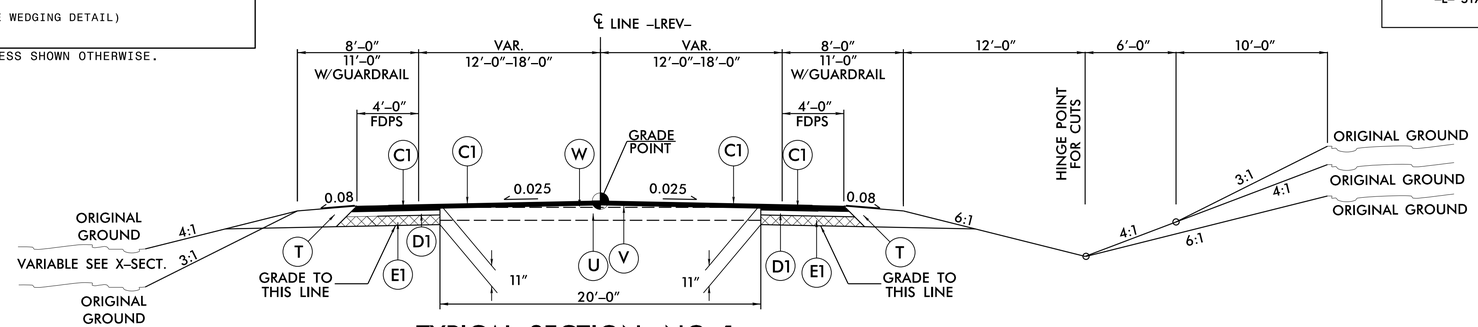

TYPICAL SECTION NO. 1

USE TYPICAL SECTION NO. 1 AS FOLLOWS:
–LREV– STA. 14+75.06 TO –LREV– STA. 19+00.00
–LREV– STA. 25+00.00 TO –LREV– STA. 29+23.94

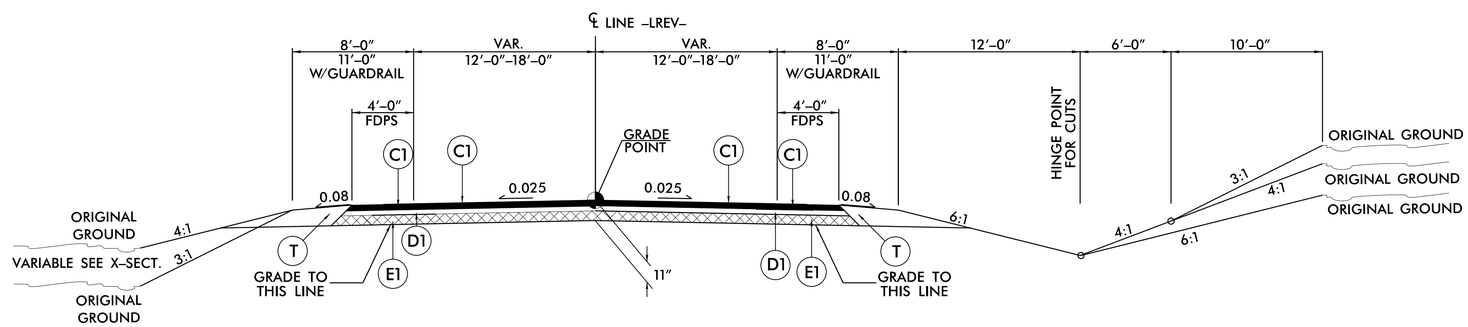

TYPICAL SECTION NO. 2

USE TYPICAL SECTION NO. 2 AS FOLLOWS:
–LREV– STA. 19+00.00 TO –LREV– STA. 19+58.71 (BEGIN BRIDGE)
–LREV– STA. 20+81.29 (END BRIDGE) TO –LREV– STA. 25+00.00

6/2/99
8/7/2019
17BP.4.R.110_rdy_psh_02A_1_TYP.dgn
USER: Hefner

DocuSign Envelope ID: 9214F42C-8621-415C-951F-C74B1F69053A

PROJECT REFERENCE NO.	SHEET NO.
17BP.4.R.110	2A-2

ROADWAY DESIGN ENGINEER
9/24/2019
NORTH CAROLINA PROFESSIONAL SEAL 022999 ENGINEER GREG S. PURVIS
DocuSigned by: Greg S. Purvis

PAVEMENT DESIGN ENGINEER
9/24/2019
NORTH CAROLINA PROFESSIONAL SEAL 037392 ENGINEER RACHEL C. EVANS
DocuSigned by: Rachel C. Evans

DOCUMENT NOT CONSIDERED FINAL UNLESS ALL SIGNATURES COMPLETED

WETHERILL ENGINEERING
1223 Jones Franklin Rd.
Raleigh, N.C. 27606
License No. F-0377
Bus: 919 851 8077
Fax: 919 851 8107
TRANSPORTATION PLANNING/DESIGN - BRIDGE/STRUCTURE DESIGN
CIVIL/SITE DESIGN - GIS/GPS - CONSTRUCTION OBSERVATION

PAVMNT. SCHED. (FINAL)	
C1	3" S9.5C
C2	VAR. S9.5B
D1	4" I19.0C
D2	VAR. I19.0C
E1	4" B25.0C
E2	VAR. B25.C
J1	6" ABC
R1	SBG
T	EARTH MAT.
U	EXIST.
V	MILLING
W	WEDGING

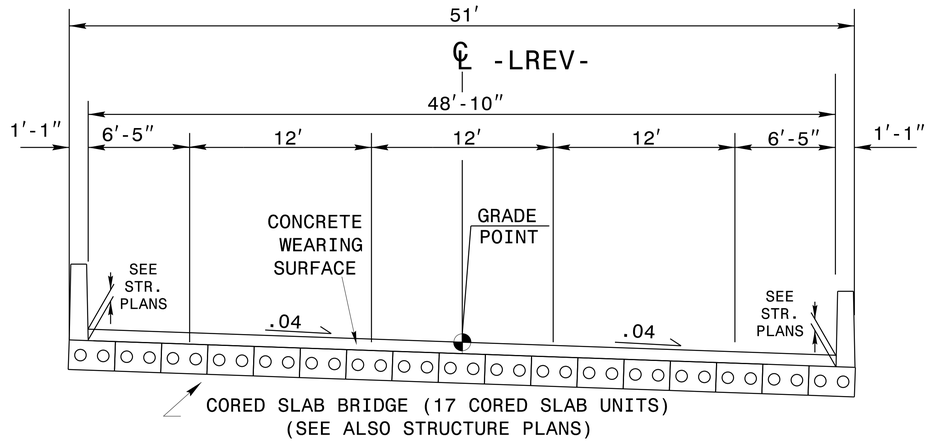

TYPICAL SECTION NO. 3

USE TYPICAL SECTION NO. 3 AS FOLLOWS:
–LREV– STA. 19+58.71 TO –LREV– STA. 20+81.29

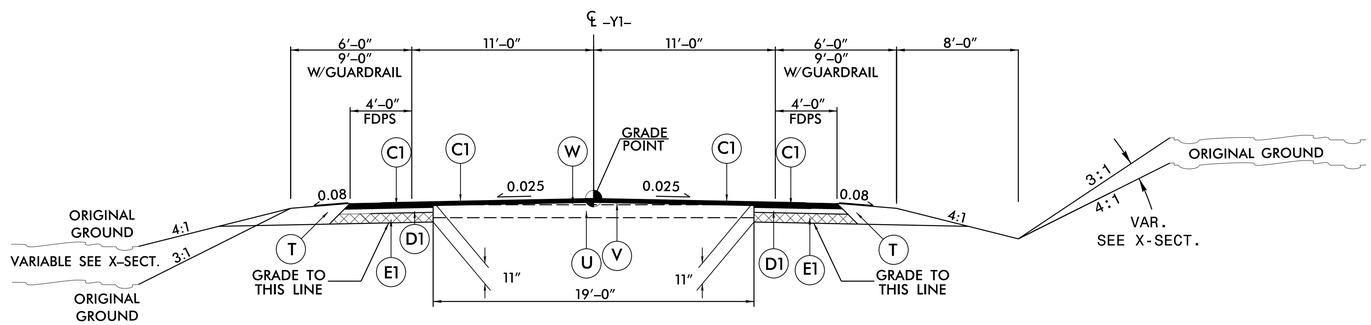

TYPICAL SECTION NO. 4

USE TYPICAL SECTION NO. 4 AS FOLLOWS:
–Y1– STA. 10+18.14 TO –Y1– STA. 12+50.00

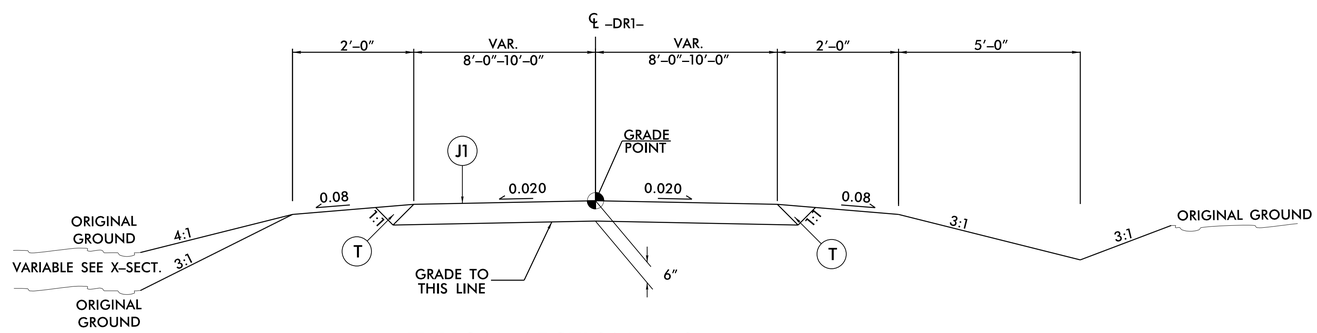

TYPICAL SECTION NO. 5

USE TYPICAL SECTION NO. 5 AS FOLLOWS:
–DR1– STA. 10+13.23 TO –DR1– STA. 11+38.00

8/7/2019
17BP.4.R.110_rdy_psh_02A_2_TYP.dgn
USER: RLEFLER

DocuSign Envelope ID: 921AF42C-8621-415C-951F-C74B1F6953A

STATE OF NORTH CAROLINA
DEPT. OF TRANSPORTATION
DIVISION OF HIGHWAYS
RALEIGH, N.C.

ROADWAY DETAIL DRAWING FOR
STRUCTURE ANCHOR UNITS
GUARDRAIL ANCHOR UNIT, TYPE III
FOR ATTACHMENT TO RAIL ON BRIDGE

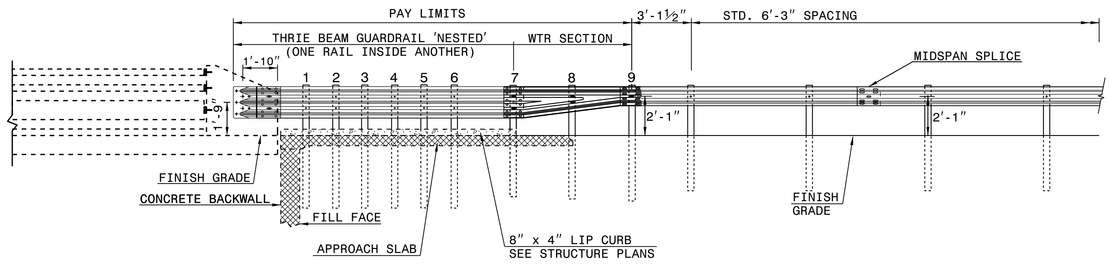

ELEVATION

NOTE:
**POST NOT REQUIRED FOR SKEW ANGLES GREATER THAN 150° OR LESS THAN 30° UNLESS OTHERWISE DIRECTED BY THE ENGINEER.
*THE DISTANCE FROM END OF BRIDGE RAIL TO CENTER LINE OF THE FIRST POST SHOULD BE 11½" IF CONCRETE BACKWALL IS NOT PRESENT.
-SHOULDER BERM GUTTER MUST BE INSTALLED TO THE LIMITS 8" x 4" LIP CURB IS SHOWN IF ANCHOR UNIT IS NOT ADJACENT TO AN APPROACH SLAB.
-MEASURE GUARDRAIL HEIGHT FROM THE TOP OF ADJACENT SURFACE (SHOULDER, BERM, OR GUTTER).
-LAP JOINTS IN THE DIRECTION OF TRAFFIC FLOW.
-SEE SHEET 3 FOR POST SECTIONS 1 THRU 9.

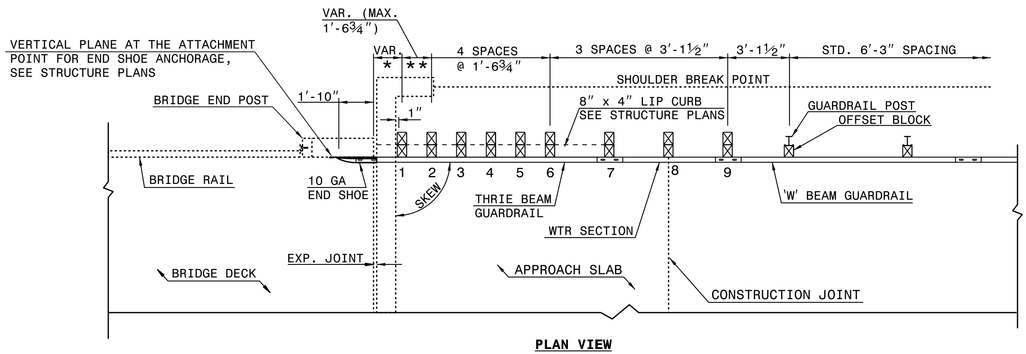

PLAN VIEW

GUARDRAIL ANCHOR UNIT, TYPE III FOR ATTACHMENT TO RAIL ON BRIDGE

SHEET 1 OF 7
862D03

STATE OF NORTH CAROLINA
DEPT. OF TRANSPORTATION
DIVISION OF HIGHWAYS
RALEIGH, N.C.

ROADWAY DETAIL DRAWING FOR
STRUCTURE ANCHOR UNITS
GUARDRAIL ANCHOR UNIT, TYPE III
FOR ATTACHMENT TO RAIL ON BRIDGE

SHEET 1 OF 7
862D03

STATE OF NORTH CAROLINA
DEPT. OF TRANSPORTATION
DIVISION OF HIGHWAYS
RALEIGH, N.C.

ROADWAY DETAIL DRAWING FOR
STRUCTURE ANCHOR UNITS
GUARDRAIL ANCHOR UNIT, TYPE III FOR ATTACHMENT TO
RAIL ON BRIDGE - SUB REGIONAL TIER

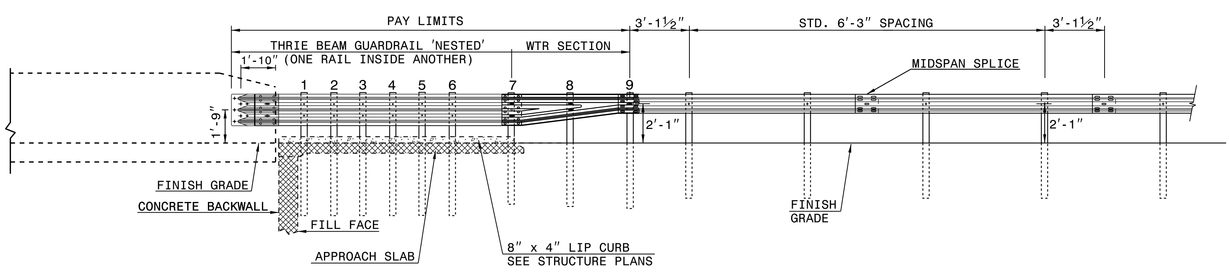

ELEVATION

NOTE:
**POST NOT REQUIRED FOR SKEW ANGLES GREATER THAN 150° OR LESS THAN 30° UNLESS OTHERWISE DIRECTED BY THE ENGINEER.
*THE DISTANCE FROM END OF BRIDGE RAIL TO CENTER LINE OF THE FIRST POST SHOULD BE 11½" IF CONCRETE BACKWALL IS NOT PRESENT.
-SHOULDER BERM GUTTER MUST BE INSTALLED TO THE LIMITS 8" x 4" LIP CURB IS SHOWN IF ANCHOR UNIT IS NOT ADJACENT TO AN APPROACH SLAB.
-MEASURE GUARDRAIL HEIGHT FROM THE TOP OF ADJACENT SURFACE (SHOULDER, BERM, OR GUTTER).
-LAP JOINTS IN THE DIRECTION OF TRAFFIC FLOW.
-SEE SHEET 3 FOR POST SECTIONS 1 THRU 9.

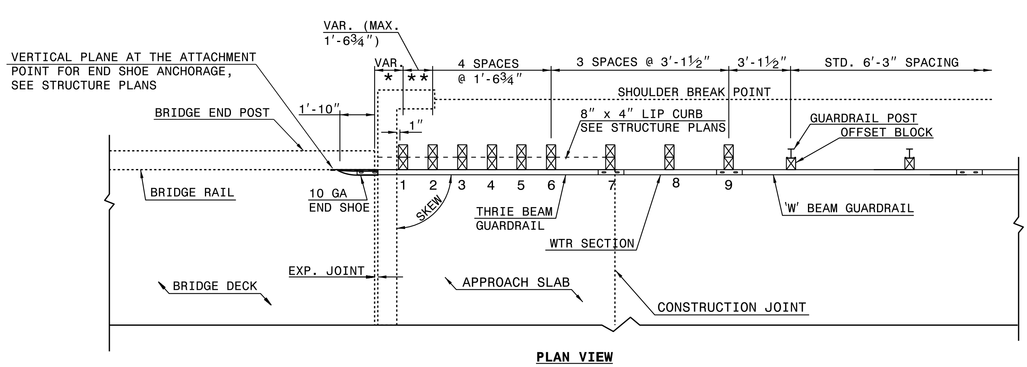

PLAN VIEW

GUARDRAIL ANCHOR UNIT, TYPE III FOR ATTACHMENT TO RAIL ON BRIDGE - SUB REGIONAL TIER

SHEET 2 OF 7
862D03

ROADWAY DETAIL DRAWING FOR
STRUCTURE ANCHOR UNITS
GUARDRAIL ANCHOR UNIT, TYPE III FOR ATTACHMENT TO
RAIL ON BRIDGE - SUB REGIONAL TIER

SHEET 2 OF 7
862D03

SEE TITLE BLOCK

ORIGINAL BY: J. HOWERTON DATE: 06-22-12
MODIFIED BY: DATE:
CHECKED BY: DATE:
FILE SPEC.:

CONTRACT STANDARDS AND DEVELOPMENT UNIT
Office 919-707-6950 FAX 919-250-4119

DOCUMENT NOT CONSIDERED FINAL UNLESS ALL SIGNATURES COMPLETED

Jennifer Finch-Cocklereer
Jennifer Finch-Cocklereer

NORTH CAROLINA PROFESSIONAL SEAL 022966 ENGINEER S. Howerton
9/24/2019

PROJECT REFERENCE NO. 17BP.4.R.110
SHEET NO. 2C-1

DocuSign Envelope ID: 9214F42C-8621-415C-951F-C74B1F69053A

PROJECT REFERENCE NO.	SHEET NO.
17BP.4.R.110	2C-2

DOCUMENT NOT CONSIDERED FINAL UNLESS ALL SIGNATURES COMPLETED

STATE OF NORTH CAROLINA
DEPT. OF TRANSPORTATION
DIVISION OF HIGHWAYS
RALEIGH, N.C.

ROADWAY DETAIL DRAWING FOR
GUARDRAIL INSTALLATION

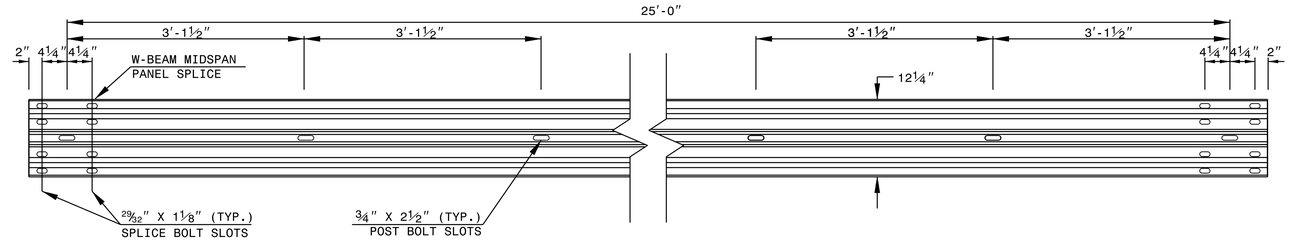

STANDARD W-BEAM GUARDRAIL

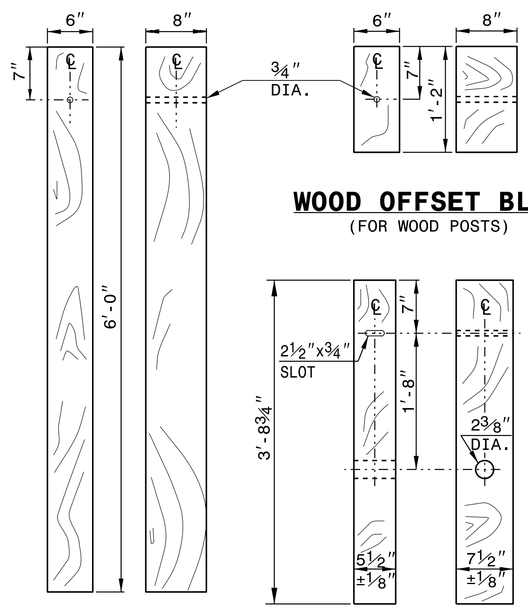

STANDARD LINE POST

WOOD OFFSET BLOCK
(FOR WOOD POSTS)

SHORT WOOD BREAKAWAY POST

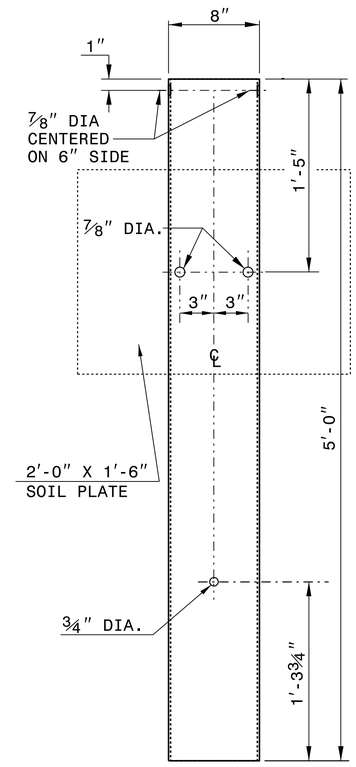

STEEL TUBE
TS 6"x8"x0.1875"

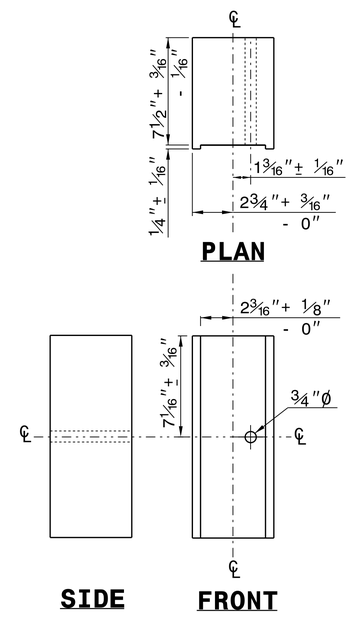

SIDE FRONT
ROUTED OFFSET BLOCK

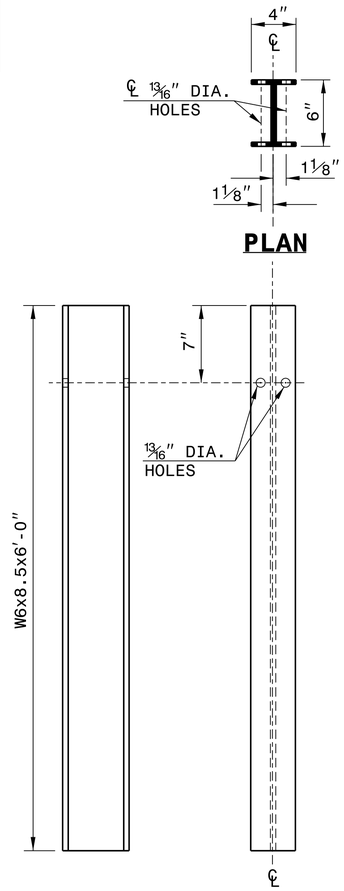

SIDE FRONT
"W6" STEEL POST

SYSTEM PARTS

SHEET 6 OF 8
862D02

STATE OF NORTH CAROLINA
DEPT. OF TRANSPORTATION
DIVISION OF HIGHWAYS
RALEIGH, N.C.

ROADWAY DETAIL DRAWING FOR
GUARDRAIL INSTALLATION

SHEET 6 OF 8
862D02

9/24/2019

NORTH CAROLINA PROFESSIONAL SEAL 022966 ENGINEER JOEL S. HOWERTON

DocuSigned by: Joel S. Howerton
873F3D17D0C0C45F...

CONTRACTS STANDARDS AND DEVELOPMENT UNIT
Office 919-707-6950 FAX 919-250-4119

SEE TITLE BLOCK

ORIGINAL BY: J.HOWERTON DATE: 3-7-2018
MODIFIED BY: DATE:
CHECKED BY: DATE:
FILE SPEC.:

COMPUTED BY: STEPHEN M. MOY, PE	DATE: 07/24/2019
CHECKED BY: GREG S. PURVIS, PE	DATE: 07/30/2019

STATE OF NORTH CAROLINA
DIVISION OF HIGHWAYS

PROJECT REFERENCE NO.	SHEET NO.
17BP.4.R.110	3B-1

NOTE: Invert Elevations are for Bid Purposes only and shall not be used for project construction stakeout. See "Standard Specifications For Roads and Structures, Section 300-5".

SHOULDER BERM GUTTER SUMMARY

LINE	STATION TO STATION	SQUARE YARDS
L	19+40 TO 19+66.52	26.52
TOTAL		26.52
SAY		30.00

PAVEMENT REMOVAL SUMMARY

LINE	STATION TO STATION	SQUARE YARDS
L	19+00 TO 19+58.71	112.68
L	20+81.29 TO 25+00	731.10
Y1	10+19.62 TO 11+38	367.45
TOTAL		1211.23
SAY		1220.00

SUMMARY OF EARTHWORK IN CUBIC YARDS

LOCATION	UNCLASSIFIED EXCAVATION	UNDERCUT	EMBT+%	BORROW	WASTE
-LREV-					
STA. 14+75.06 TO STA.19+60.00 BEG. BRIDGE	330		2495	2165	
STA. 20+80.00 END BRIDGE TO STA. 29+23.94	1344		6940	5596	
SUBTOTAL:	1674		9435	7761	
-Y1-					
STA. 10+18.14 TO STA. 13+00.00	700		429		272
SUBTOTAL:	700		429		272
-DR1-					
STA. 10+18.14 TO STA. 13+00.00	1		423	422	
SUBTOTAL:	1		423	422	
TOTAL:	2375		10287	8183	272
WASTE IN LIEU OF BORROW				-272	
5% REPLACE TOP SOIL ON BORROW PIT				396	
GRAND TOTAL:	2375		10287	8307	
SAY:	2500			8500	

Earthwork quantities are calculated by the Roadway Design Unit. These earthwork quantities are based in part on subsurface data provided by the Geotechnical Engineering Unit.

PAVEMENT STRUCTURE VOLUME = 2508 CY
SHOULDER BORROW = 470 CY
PER GEOTECH RECOMMENDATION, ESTIMATED 300 CY OF UNDERCUT TO BE USED IN THE DISCRETION OF THE RESIDENT ENGINEER.

Note: Approximate quantities only. Unclassified Excavation, Borrow Excavation, Shoulder Borrow, Fine Grading, Clearing and Grubbing, and Removal of Existing Pavement will be paid for at the contract lump sum price for "Grading."

LIST OF PIPES, ENDWALLS, ETC. (FOR PIPES 48" & UNDER)

| STATION | LOCATION (LT,RT, OR CL) | STRUCTURE NO. FROM | STRUCTURE NO. TO | TOP ELEVATION | INVERT ELEVATION | INVERT ELEVATION | SLOPE CRITICAL | DRAINAGE PIPE (RCP, CSP, CAAP, HDPE, or PVC) 12" | 15" | 18" | 24" | 30" | 36" | 42" | 48" | C.S. PIPE (UNLESS NOTED OTHRWISE) 12" | 15" | 18" | 24" | 30" | 36" | 42" | 48" | CLASS III R.C. PIPE (UNLESS OTHERWISE NOTED) 12" | 15" | 18" | 24" | 30" | 36" | 42" | 48" | 18" RCP CLASS IV PIPE | 18" SIDE DRAIN PIPE | 20" SIDE DRAIN PIPE | ENDWALLS: STD. 838.01, STD. 838.11 OR STD. 838.80 (UNLESS NOTED OTHERWISE) CU. YDS. R.C.P. | C.S.P. | QUANTITIES FOR DRAINAGE STRUCTURES * TOTAL L.F. FOR PAY QUANTITY SHALL BE COL. 'A' + (1.3 X COL. 'B') LIN. FT. A: PER EACH (0' THRU 5.0') | 5.0' THRU 10.0' | B: 10.0' AND ABOVE | C.B. STD. 840.01 OR STD. 840.02 | FRAME, GRATES AND HOOD STANDARD 840.03 TYPE OF GRATE E | F | G | D.I. STD. 840.14 OR STD. 840.15 | D.I. FRAME & GRATE STD. 840.16 | G.D.I. TYPE "A" STD. 840.17 OR 840.26 | G.D.I. TYPE "B" STD. 840.18 OR 840.27 | G.D.I. TYPE "D" STD. 840.19 OR 840.28 | G.D.I. FRAME WITH GRATE STD. 840.22 | G.D.I. FRAME WITH TWO GRATES STD. 840.22 | G.D.I. FRAME WITH GRATE STD. 840.24 | G.D.I. (N.S.) FRAME WITH TWO GRATES STD. 840.24 | TRAFFIC BEARING GRATED DROP INLET STD. 840.35 | FRAMES AND NARROW SLOT FLAT GRATES STD. 840.29 | CORR. STEEL ELBOWS NO. & SIZE | CONC. COLLARS CL. "B" C.Y. STD. 840.72 | CONC. & BRICK PIPE PLUG, C.Y. STD. 840.71 | PIPE REMOVAL LIN.FT. | REMARKS |
|---|---|---|---|---|---

COMPUTED BY: Tyler C. Bottoms DATE: 4/3/19
CHECKED BY: Jinyoung Park DATE: 5/6/19

(5-15-18)

PROJECT NO.	SHEET NO.
17BP.4.R.110	3G-1

STATE OF NORTH CAROLINA
DIVISION OF HIGHWAYS

SUMMARY OF SUBSURFACE DRAINAGE

LINE	Station	Station	Location LT/RT/CL	Drain Type* UD/BD/SD	LF
CONTINGENCY				SD	200
				TOTAL LF:	200

*UD = Underdrain
*BD = Blind Drain
*SD = Subsurface Drain

DocuSign Envelope ID: 9214F42C-8621-415C-951F-C74B1F69053A

WETHERILL ENGINEERING
1223 Jones Franklin Rd.
Raleigh, N.C. 27606
License No. F-0377
Bus: 919 851 8077
Fax: 919 851 8107
TRANSPORTATION PLANNING/DESIGN - BRIDGE/STRUCTURE DESIGN
CIVIL/SITE DESIGN - GIS/GPS - CONSTRUCTION OBSERVATION

DOCUMENT NOT CONSIDERED FINAL UNLESS ALL SIGNATURES COMPLETED

PROJECT REFERENCE NO.	SHEET NO.
17BP.4.R.110	4

ROADWAY DESIGN ENGINEER 9/24/2019 — NORTH CAROLINA PROFESSIONAL SEAL 022999 ENGINEER GREG S. PURVIS — DocuSigned by: Greg S. Purvis

HYDRAULICS ENGINEER 9/24/2019 — NORTH CAROLINA PROFESSIONAL SEAL 044561 ENGINEER HARMINDER SINGH — DocuSigned by: Harminder Singh

BM2 ELEVATION = 87.33'
N 595172 E 2337021
BL STATION 14+91.00 132' RIGHT
BENCHTIE IN 7" OAK

NOTE: DESIGN EXCEPTION NEEDED FOR BRIDGE WITH.
SKETCH SHOWING BRIDGE/PAVEMENT RELATIONSHIP

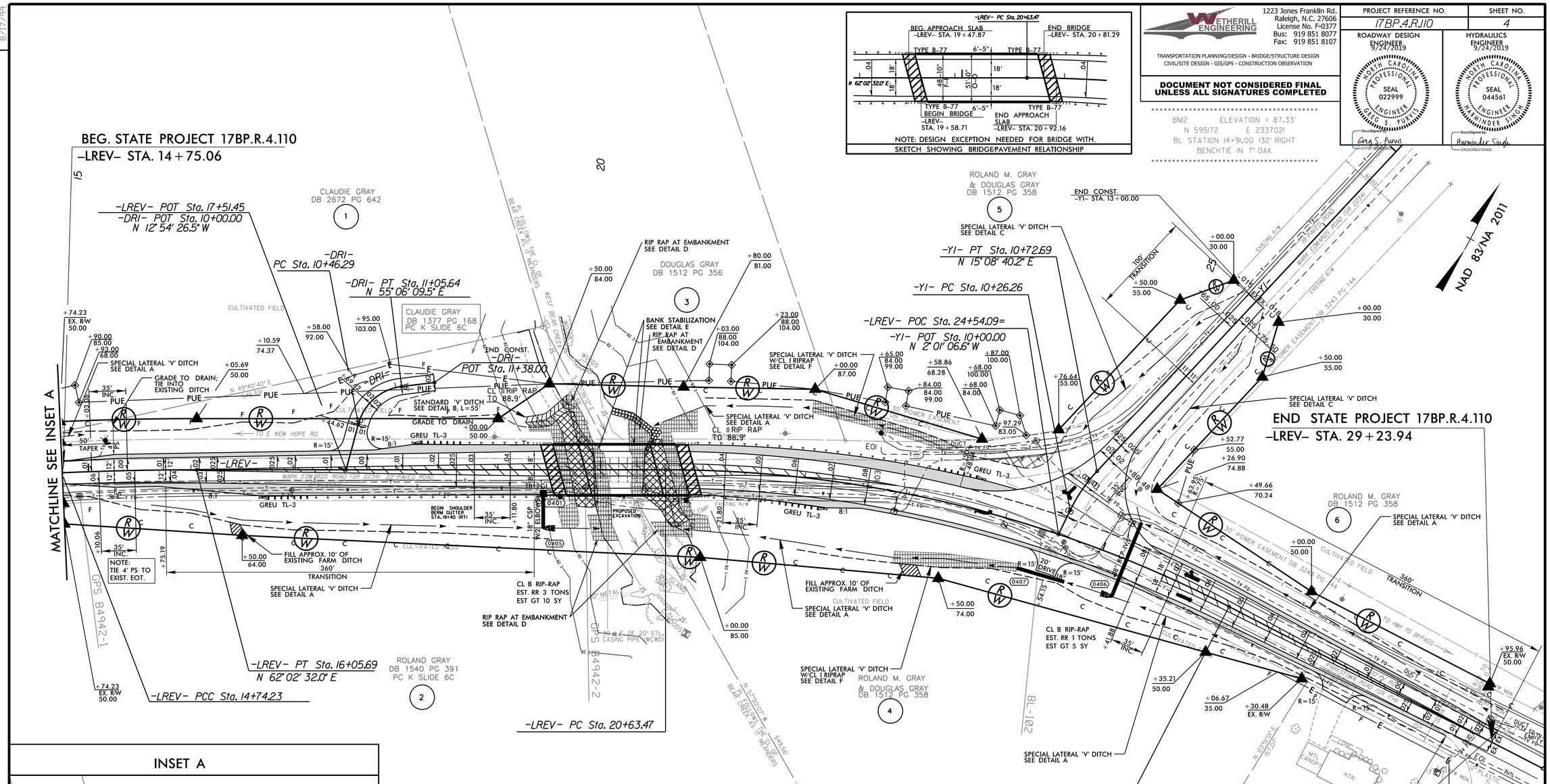

INSET A

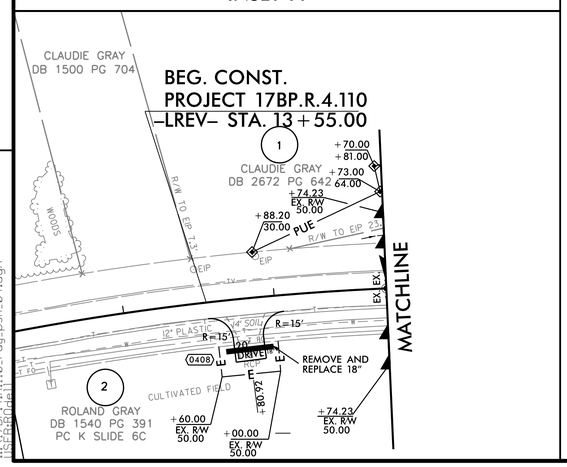

-LREV-		
PI Sta 13+45.70	PI Sta 15+39.97	PI Sta 23+54.88
Δ = 8° 34' 44.8" (RT)	Δ = 2° 30' 38.5" (RT)	Δ = 27° 17' 55.6" (RT)
D = 3° 19' 52.1"	D = 1° 54' 35.5"	D = 4° 46' 28.7"
L = 257.54'	L = 131.46'	L = 571.74'
T = 129.01'	T = 65.74'	T = 291.41'
R = 1,720.00'	R = 3,000.00'	R = 1,200.00'
SE = EXIST.	SE = EXIST.	SE = .08
DS = EXIST.	DS = EXIST.	DS = 60 MPH

-DRI-	-Y1-
PI Sta 10+80.03	PI Sta 10+49.65
Δ = 68° 00' 36.0" (RT)	Δ = 17° 09' 46.7" (RT)
D = 114° 35' 29.6"	D = 36° 57' 54.1"
L = 59.35'	L = 46.43'
T = 33.73'	T = 23.39'
R = 50.00'	R = 155.00'
SE = NC	SE = NC
DS = N/A	DS = STOP CONDT.

DETAIL A
SPECIAL LATERAL 'V' DITCH
(Not to Scale)

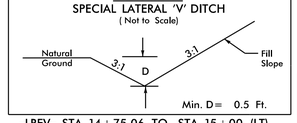

-LREV- STA. 14+75.06 TO STA. 15+00 (LT)
-LREV- STA. 15+50 TO STA. 20+00 (RT)
-LREV- STA. 20+80 TO STA. 23+00 (RT)
-LREV- STA. 24+75 TO STA. 26+50 (RT)
-LREV- STA. 25+25 TO STA. 29+23.94 (LT)
-LREV- STA. 20+50 TO STA. 22+00 (LT)

DETAIL B
STANDARD 'V' DITCH
(Not to Scale)

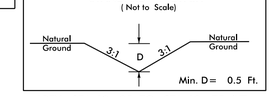

-LREV- STA. 19+25 TO STA. 19+75 (LT)

DETAIL F
SPECIAL LATERAL 'V' DITCH
(Not to Scale)

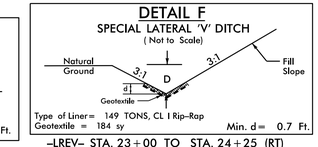

-LREV- STA. 23+00 TO STA. 24+25 (RT)
-LREV- STA. 22+00 TO STA. 23+25 (LT)

DETAIL D
RIP RAP AT EMBANKMENT
(Not to Scale)

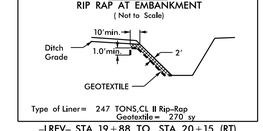

-LREV- STA. 19+88 TO STA. 20+15 (RT)
-LREV- STA. 19+60 TO STA. 19+75 (LT)
-LREV- STA. 20+43 TO STA. 20+67 (LT)
-LREV- STA. 20+56 TO STA. 20+91 (RT)

DETAIL C
SPECIAL LATERAL 'V' DITCH
(Not to Scale)

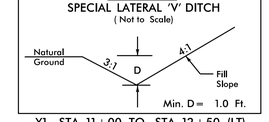

-Y1- STA. 11+00 TO STA. 12+50 (LT)
-Y1- STA. 10+50 TO STA. 12+50 (RT)

DETAIL E
BANK STABILIZATION
(Not to Scale)

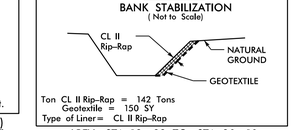

-LREV- STA. 19+93 TO STA. 20+10
-LREV- STA. 20+27 TO STA. 20+45

PAVEMENT REMOVAL

SEE SHEETS S-1 THRU S-24 FOR STRUCTURE PLANS

SEE SHEET 5 FOR PROFILES

REVISIONS

8/17/99

8/7/2019
17BP.4.R.110_rdy_psh_04.dgn
USER:rdgale

DocuSign Envelope ID: 9214F42C-8621-415C-951F-C74B1F69053A

WETHERILL ENGINEERING
1223 Jones Franklin Rd.
Raleigh, N.C. 27606
License No. F-0377
Bus: 919 851 8077
Fax: 919 851 8107
TRANSPORTATION PLANNING/DESIGN - BRIDGE/STRUCTURE DESIGN
CIVIL/SITE DESIGN - GIS/GPS - CONSTRUCTION OBSERVATION

DOCUMENT NOT CONSIDERED FINAL UNLESS ALL SIGNATURES COMPLETED

PROJECT REFERENCE NO.	SHEET NO.
17BP.4.R.110	5

ROADWAY DESIGN ENGINEER 9/24/2019 — NORTH CAROLINA PROFESSIONAL SEAL 022999 ENGINEER GREG S. PURVIS — DocuSigned by: Greg S. Purvis D7F87C25BE3403...

HYDRAULICS ENGINEER 9/24/2019 — NORTH CAROLINA PROFESSIONAL SEAL 044561 ENGINEER HARMINDER SINGH — DocuSigned by: Harminder Singh C6C0C5BE57024DC...

-LREV-

STRUCTURE HYDRAULIC DATA

DESIGN DISCHARGE	= 1200	CFS
DESIGN FREQUENCY	= 25	YRS
DESIGN HW ELEVATION	= 87.9	FT
BASE DISCHARGE	= 1800	CFS
BASE FREQUENCY	= 100	YRS
BASE HW ELEVATION	= 89.0	FT
OVERTOPPING DISCHARGE	= 2530+	CFS
OVERTOPPING FREQUENCY	= 500+	YRS
OVERTOPPING ELEVATION	= 92.3	FT

PIPE HYDRAULIC DATA
-LREV- Sta.25+25

DRAINAGE AREA	= 1.3	AC
DESIGN FREQUENCY	= 4	YRS
DESIGN DISCHARGE	= 10	CFS
DESIGN HW ELEVATION	= 104.35	FT
100 YEAR DISCHARGE	= 5	CFS
100 YEAR HW ELEVATION	= 100	FT
OVERTOPPING FREQUENCY	= 5+	YRS
OVERTOPPING DISCHARGE	= 100+	CFS
OVERTOPPING ELEVATION	= 104.51+	FT

DITCH LEGEND
LEFT DITCH
RIGHT DITCH

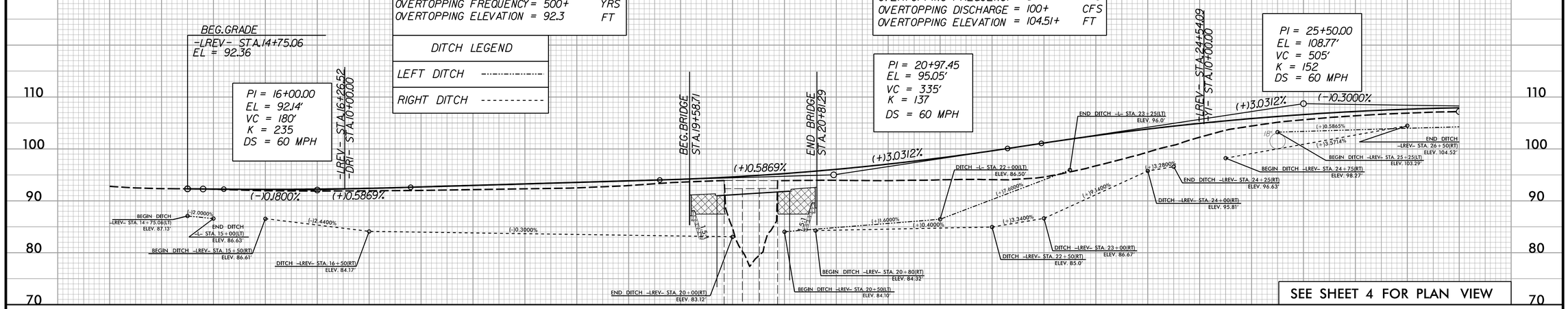

-LREV-

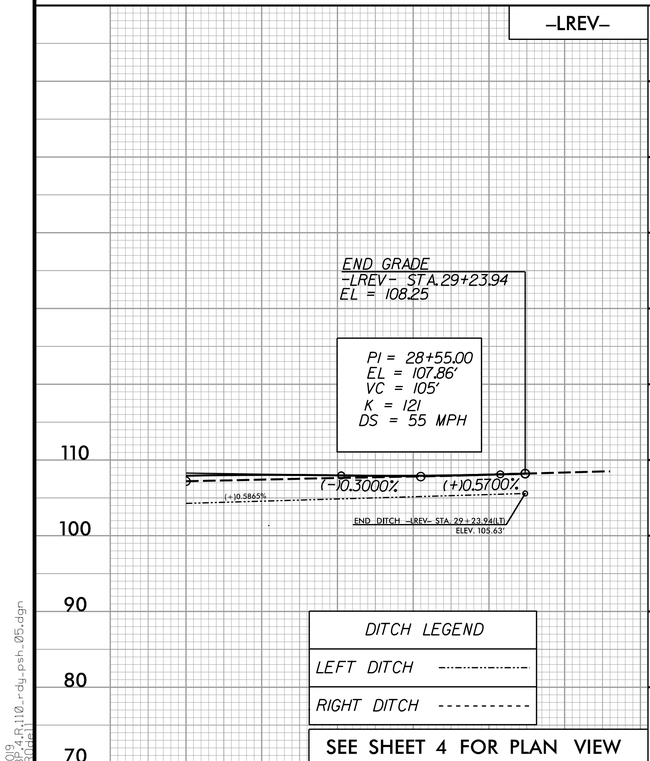

-Y1-

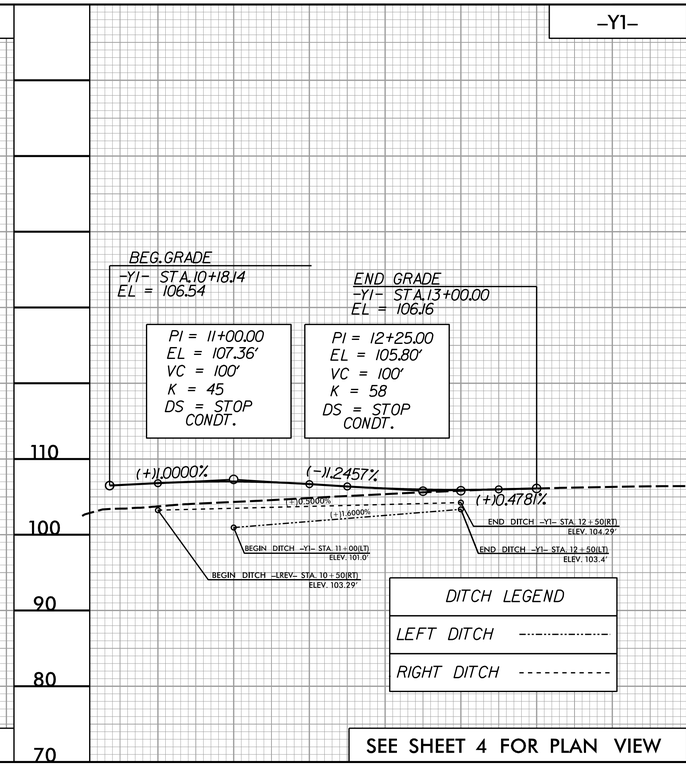

-DR1-

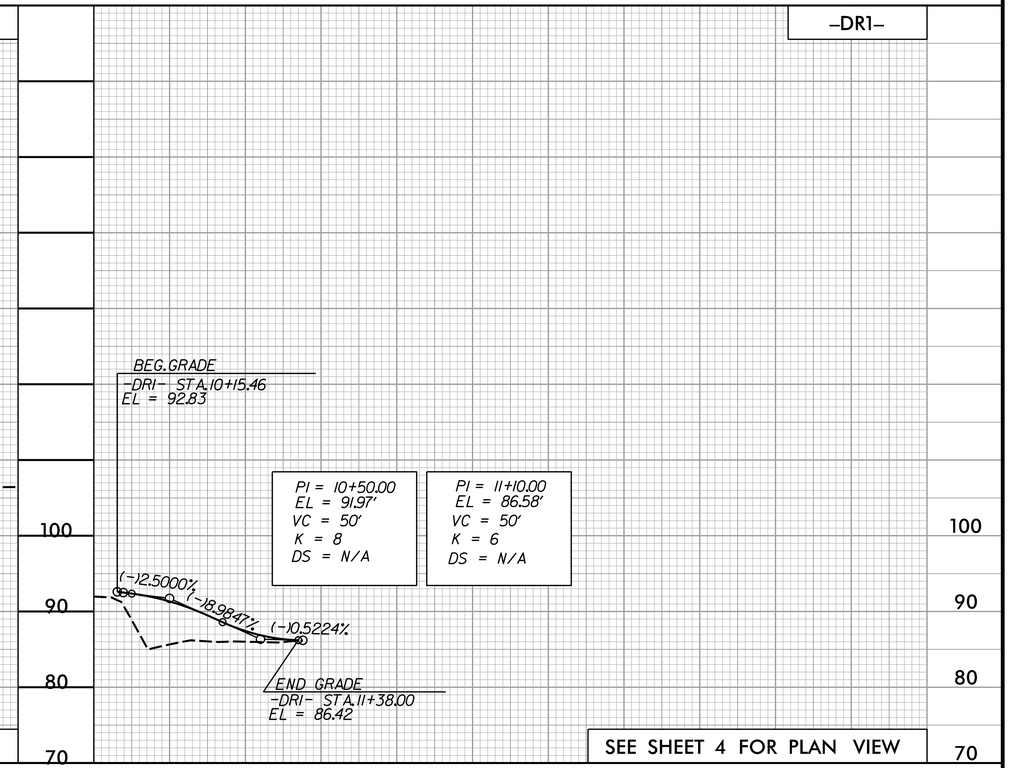

5/28/99
8/7/2019
17BP.4.R.110_rdy_psh_05.dgn
USER:Rdgrell

DocuSign Envelope ID: 2065EABF-D19A-480A-A412-5FF324130A4C

09/08/99

TIP PROJECT: 17BP.4.R.110

STATE	STATE PROJECT REFERENCE NO.	SHEET NO.	TOTAL SHEETS
N.C.	95-0121	RW01	9

STATE OF NORTH CAROLINA
DIVISION OF HIGHWAYS

SURVEY CONTROL, EXISTING CENTERLINES, RIGHT OF WAY, EASEMENTS AND PROPERTY TIES

WAYNE COUNTY

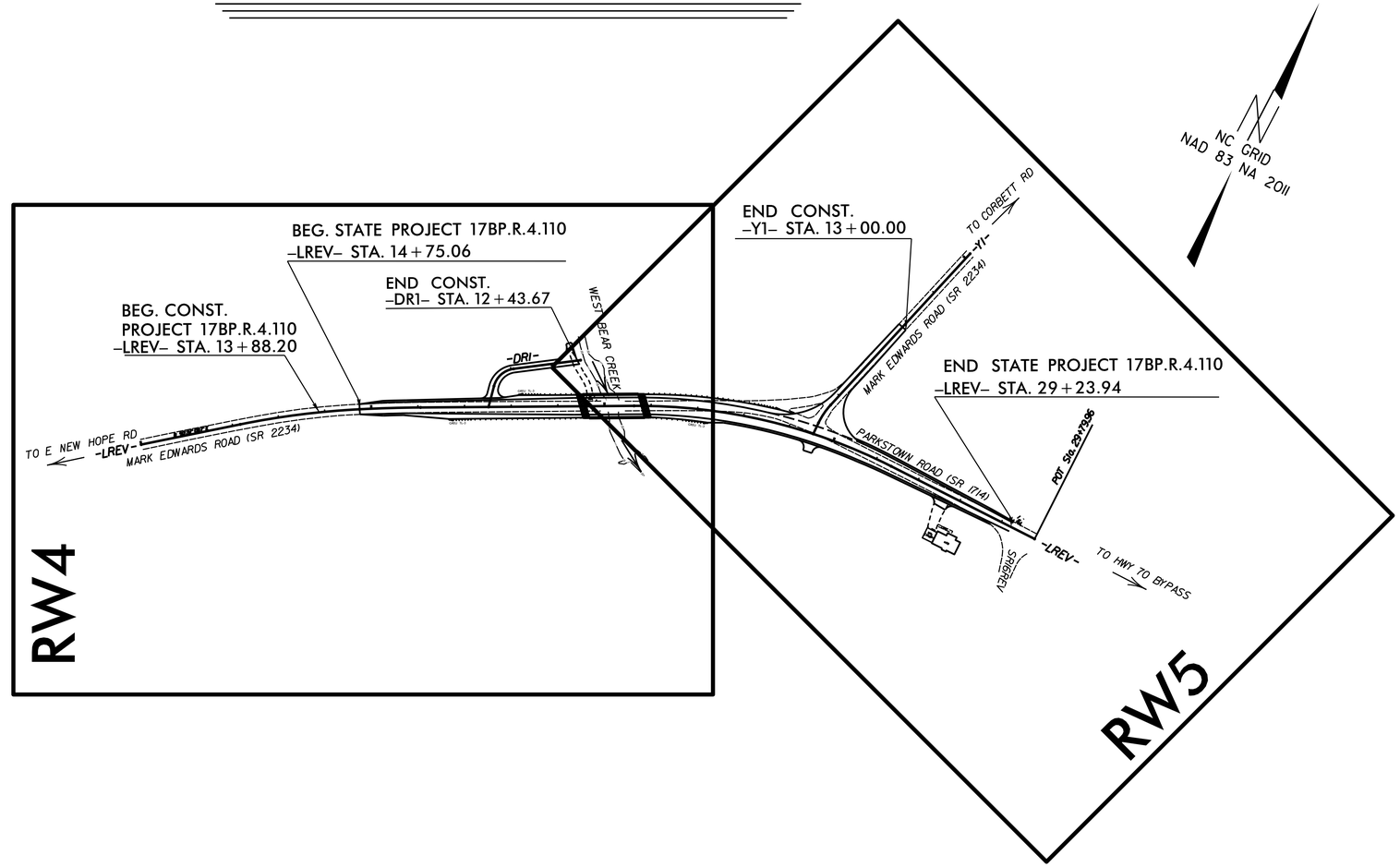

GRAPHIC SCALE

50 25 0 50 100

PLANS

DATUM DESCRIPTION

THE LOCALIZED COORDINATE SYSTEM DEVELOPED FOR THIS PROJECT
IS BASED ON THE STATE PLANE COORDINATES ESTABLISHED BY
NCGS FOR MONUMENT "B4942-2"
WITH NAD 83/NSRS 2011 STATE PLANE GRID COORDINATES OF
NORTHING: 595,252.407(ft) EASTING: 2,336,867.757(ft)
ELEVATION: 93.17(ft)
THE AVERAGE COMBINED GRID FACTOR USED ON THIS PROJECT
(GROUND TO GRID) IS: 0.999876235
THE N.C. LAMBERT GRID BEARING AND
LOCALIZED HORIZONTAL GROUND DISTANCE FROM
"B4942-2" TO -L- STATION 10+00.00 IS
S 58°39'45" W 980.647(ft)
ALL LINEAR DIMENSIONS ARE LOCALIZED HORIZONTAL DISTANCES
VERTICAL DATUM USED IS NAVD 88 / GEOID G12NC

Prepared in the Office of:

HAWKEYE GEOMATICS, PC
135.5 MAIN STREET
OXFORD, NC 27565

2018 STANDARD SPECIFICATIONS

RIGHT OF WAY DATE: _____

LETTING DATE: _____

PROFESSIONAL LAND SURVEYOR

NORTH CAROLINA PROFESSIONAL L-5172 LAND SURVEYOR NATHAN J. PERKINSON

DocuSigned by:
Nathan Perkinson
AA9A78ED0514F0...
8/23/2019

SIGNATURE: *Date:*

STATE OF NORTH CAROLINA • DEPARTMENT OF TRANSPORTATION

$$$$SYSTIME$$$$
$$$$USERNAME$$$$DGN$$$$

SURVEY CONTROL SHEET

W/ EXISTING CENTERLINE ALIGNMENTS PRIOR TO CONSTRUCTION

PROJECT REFERENCE NO.	SHEET NO.
95-0121	RW02C-1

Location and Surveys

HAWKEYE GEOMATICS, PC
135.5 MAIN STREET
OXFORD, NC 27565

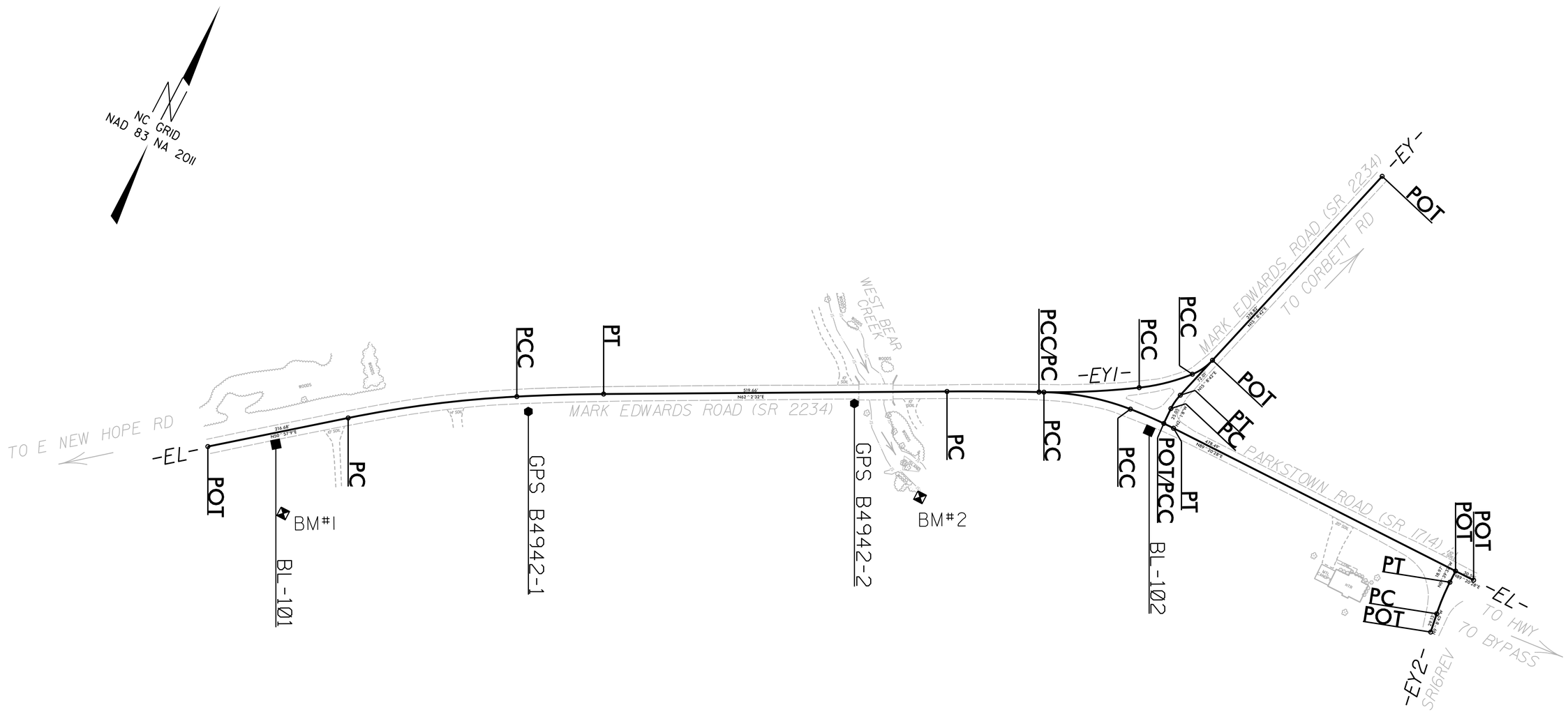

NOTES:

1. PROJECT CONTROL WAS ESTABLISHED USING GNSS, THE GLOBAL NAVIGATION SATELLITE SYSTEM.

2. THE SURVEY CONTROL DATA FOR THIS PROJECT HAS BEEN COMPILED FROM VARIOUS SOURCES. IF FURTHER INFORMATION REGARDING PROJECT CONTROL IS NEEDED, PLEASE CONTACT THE LOCATION AND SURVEYS UNIT.

6/2/99
REVISIONS
15-AUG-2019 08:30
C:\Users\ajperkinson\Documents\Hawkeye Geomatics PC\Projects\2019\NCDOT\950121\from Jarrett\95-0121_ls_rw02c-1.dgn
AJ.Perkinson AT AJ-HSPC

PROJECT REFERENCE NO.	SHEET NO.
95-0121	RW02C-2
Location and Surveys	

HAWKEYE GEOMATICS, PC
135.5 MAIN STREET
OXFORD, NC 27565

SURVEY CONTROL SHEET

W/ EXISTING CENTERLINE ALIGNMENTS PRIOR TO CONSTRUCTION

BL

POINT	DESC.	NORTH	EAST	ELEVATION	LREV STATION	OFFSET
101	BL-101	594793.0547	2336119.7778	99.72	11+01.51	17.11 RT
1	B4942-1	595013.5086	2336435.8555	90.31	14+90.65	23.56 RT
2	B4942-2	595252.4070	2336867.7570	93.17	19+85.08	17.21 RT
102	BL-102	595422.0603	2337282.3211	100.90	24+38.05	3.91 RT

****
BM1 ELEVATION = 105.56
N 594705 E 2336178
BENCHTIE IN A 10"PINE
****

****
BM2 ELEVATION = 87.33
N 595172 E 2337021
BENCHTIE IN A 7"OAK
****

NOTES:

1. PROJECT CONTROL WAS ESTABLISHED USING GNSS, THE GLOBAL NAVIGATION SATELLITE SYSTEM.
2. THE SURVEY CONTROL DATA FOR THIS PROJECT HAS BEEN COMPILED FROM VARIOUS SOURCES. IF FURTHER INFORMATION REGARDING PROJECT CONTROL IS NEEDED, PLEASE CONTACT THE LOCATION AND SURVEYS UNIT.

REVISIONS

6/2/99
15-AUG-2019 08:34
C:\Users\ajperkinson\Documents\Hawkeye Geomatics PC\Projects\2019\NCDOT\950121\from Jarrett\95-0121-ls-rw02c-2.dgn
AJ Perkinson AT AJ-HGPC

PROJECT REFERENCE NO.	SHEET NO.
95-0121	RW02C-3

Location and Surveys

HAWKEYE GEOMATICS, PC
135.5 MAIN STREET
OXFORD, NC 27565

SURVEY CONTROL SHEET

W/ EXISTING CENTERLINE ALIGNMENTS PRIOR TO CONSTRUCTION

EL

POINT	N	E	BEARING	DIST	DELTA	D	L	T	R
POT	594742.392	2336030.169							
LINE			N 50°57'08.7" E	216.68					
PC	594878.896	2336198.451							
CURVE			N 55°14'31.1" E	257.30	08°34'44.8"(RT)	03°19'53.8"	257.51	129.01	1720.00
PCC	595025.587	2336409.841							
CURVE			N 60°47'12.8" E	131.45	02°30'38.5"(RT)	01°54'35.8"	131.45	65.74	3000.00
PT	595089.742	2336524.571							
LINE			N 62°02'32.0" E	519.66					
PC	595333.370	2336983.585							
CURVE			N 62°50'42.0" E	139.21	01°36'20.0"(RT)	01°09'11.9"	139.21	69.61	4968.00
PCC	595396.906	2337107.452							
CURVE			N 63°41'27.9" E	7.50	00°05'11.6"(RT)	01°09'11.9"	7.50	3.75	4968.00
PCC	595400.232	2337114.179							
CURVE			N 73°34'47.6" E	133.37	19°41'28.0"(RT)	14°43'54.4"	133.66	67.68	390.00
PCC	595437.934	2337242.114							
CURVE			N 85°42'11.7" E	55.01	04°33'20.3"(RT)	08°17'13.0"	54.97	27.53	692.00
PCC	595442.055	2337296.966							
CURVE			N 88°39'39.7" E	16.42	01°21'35.8"(RT)	08°17'13.0"	16.41	8.21	692.00
PT	595442.439	2337313.386							
LINE			N 89°20'27.6" E	478.49					
POT	595447.942	2337791.843							
LINE			N 89°20'27.6" E	30.59					
POT	595448.294	2337822.431							

EY

POINT	N	E	BEARING	DIST	DELTA	D	L	T	R
POT	595442.055	2337296.966							
LINE			N 02°01'08.1" W	25.05					
PC	595467.092	2337296.083							
CURVE			N 07°27'56.7" E	24.60	16°28'44.7"(RT)	71°14'47.6"	23.13	12.43	85.84
PT	595491.489	2337299.280							
LINE			N 15°08'41.8" E	72.01					
POT	595560.997	2337318.094							
LINE			N 15°08'41.8" E	378.82					
POT	595926.656	2337417.064							

EY1

POINT	N	E	BEARING	DIST	DELTA	D	L	T	R
PC	595396.911	2337107.461							
CURVE			N 59°56'36.4" E	151.83	07°24'32.3"(LT)	04°52'34.5"	151.94	76.08	1175.00
PCC	595472.958	2337238.878							
CURVE			N 48°17'14.7" E	83.00	15°54'11.0"(LT)	19°05'54.9"	83.27	41.90	300.00
PCC	595528.186	2337300.838							
CURVE			N 27°44'25.5" E	37.07	25°11'27.4"(LT)	67°24'24.5"	37.37	18.99	85.00
PT	595560.997	2337318.094							

EY2

POINT	N	E	BEARING	DIST	DELTA	D	L	T	R
POT	595348.605	2337801.117							
LINE			N 09°08'44.7" W	29.13					
PC	595377.363	2337796.487							
CURVE			N 04°54'08.5" W	51.80	08°29'12.3"(RT)	16°22'12.8"	51.84	25.97	350.00
PT	595428.969	2337792.061							
LINE			N 00°39'32.4" W	18.97					
POT	595447.942	2337791.843							

NOTES:

1. PROJECT CONTROL WAS ESTABLISHED USING GNSS, THE GLOBAL NAVIGATION SATELLITE SYSTEM.

2. THE SURVEY CONTROL DATA FOR THIS PROJECT HAS BEEN COMPILED FROM VARIOUS SOURCES. IF FURTHER INFORMATION REGARDING PROJECT CONTROL IS NEEDED, PLEASE CONTACT THE LOCATION AND SURVEYS UNIT.

REVISIONS

6/2/99

15-AUG-2019 08:38
C:\Users\ajperkinson\Documents\Hawkeye Geomatics PC\Projects\2019\NCDOT\950121\from Jarrett\95-0121_ls_rw02c-3.dgn
AJ.Perkinson AT AJ-HGPC

PROJECT REFERENCE NO.	SHEET NO.
95-0121	RW02D-1
Location and Surveys	

HAWKEYE GEOMATICS, PC
135.5 MAIN STREET
OXFORD, NC 27565

SURVEY CONTROL SHEET

W/ EXISTING CENTERLINE ALIGNMENTS PRIOR TO CONSTRUCTION

LREV

TYPE	STATION	NORTH	EAST
POT	10+00.00	594742.3925	2336030.1685
PC	12+16.68	594878.8962	2336198.4506
PCC	14+74.23	595025.5870	2336409.8414
PT	16+05.69	595089.7419	2336524.5713
PC	20+63.47	595304.3607	2336928.9291
PT	26+35.21	595444.3293	2337477.7123
POT	29+79.96	595448.2942	2337822.4314

Y1

TYPE	STATION	NORTH	EAST
POT	10+00.00	595428.6116	2337297.4434
PC	10+26.26	595454.8504	2337296.5186
PT	10+72.69	595500.8042	2337301.8056
POT	15+13.86	595926.6560	2337417.0640

NOTES:

1. PROJECT CONTROL WAS ESTABLISHED USING GNSS, THE GLOBAL NAVIGATION SATELLITE SYSTEM.
2. THE SURVEY CONTROL DATA FOR THIS PROJECT HAS BEEN COMPILED FROM VARIOUS SOURCES. IF FURTHER INFORMATION REGARDING PROJECT CONTROL IS NEEDED, PLEASE CONTACT THE LOCATION AND SURVEYS UNIT.

REVISIONS

6/2/99
15-AUG-2019 08:40
C:\Users\ajperkinson\Documents\Hawkeye Geomatics PC\Projects\2019\NCDOT\950121\from Jarrett\95-0121_ls-rw02d-1.dgn
AJ.Perkinson AT AJ-HSPC

DocuSign Envelope ID: 64735446-C373-4F28-89FD-BA2D7E43777D

RIGHT OF WAY CONTROL SHEET

PROJECT REFERENCE NO.	SHEET NO.
95-0121	RW03E-1

Location and Surveys

HAWKEYE GEOMATICS, PC
135.5 Main Street
Oxford, NC 27565

PROJECT SURVEYOR

NORTH CAROLINA PROFESSIONAL L-5172 LAND SURVEYOR AARON J. PERKINSON

DOCUMENT NOT CONSIDERED FINAL UNLESS ALL SIGNATURES COMPLETED

ROW MARKER IRON PIN AND CAP-E

ALIGN	STATION	OFFSET	NORTH	EAST
LREV	14+74.23	-30.00	595051.4443	2336394.6294
LREV	14+74.23	-50.00	595068.6825	2336384.4882
LREV	14+74.23	50.00	594982.4916	2336435.1946
LREV	14+74.23	30.00	594999.7298	2336425.0533
LREV	16+05.69	-50.00	595133.9066	2336501.1302
LREV	16+50.00	64.00	595053.9864	2336593.7179
LREV	19+00.00	-50.00	595271.8870	2336761.0957
LREV	19+50.00	-84.00	595325.3600	2336789.3205
LREV	20+80.00	-81.00	595384.0723	2336906.5971
LREV	21+00.00	85.00	595244.7347	2336998.9972
LREV	22+00.00	-87.00	595442.3578	2337021.1027
LREV	23+50.00	74.00	595335.6319	2337213.8312
LREV	23+58.86	-68.28	595475.7963	2337187.8298
LREV	25+26.90	-74.88	595512.6939	2337362.0024
LREV	26+35.21	50.00	595394.3326	2337478.2874
LREV	27+00.00	-50.00	595495.0711	2337541.9182
LREV	27+30.48	30.00	595415.4270	2337573.3213
LREV	28+95.96	-46.51	595493.8359	2337737.9023
LREV	28+95.96	-50.00	595497.3248	2337737.8621

ROW MARKER IRON PIN AND CAP-E

ALIGN	STATION	OFFSET	NORTH	EAST
Y1	10+76.64	-55.00	595518.9897	2337249.7487
Y1	12+50.00	-55.00	595686.3296	2337295.0399
Y1	12+50.00	55.00	595657.5917	2337401.2196
Y1	13+00.00	-30.00	595728.0622	2337332.2326
Y1	13+00.00	30.00	595712.3870	2337390.1488

I, Aaron J Perkinson, a Professional Land Surveyor in the state of North Carolina hereby certify to the best of my knowledge and belief that the following work item(s) (Base map Compilation, R/W Staking) performed under my responsible charge meet NCDOT Survey Standards as directed in the NCDOT Location & Surveys guidelines and procedures.

I further certify that the data compiled came from available surveys/mapping performed by others and provided to me by NCDOT and do not certify to the accuracy or quality of the individual data sources.

I further certify that the right of way and permanent easement points shown herein and outlined in the tables shown hereon (localized coordinates, station/offset) have been checked and are accurate representations of the right of way and permanent easement points depicted on the corresponding highway plans. I also certify that the right of way and permanent easement points shown herein have been field monumented under my supervision from existing survey control provided by others; that the depicted property data shown herein were surveyed by others; and these monuments denote the right of way and easement boundaries at the time of staking which may be subject to change due to right of way revisions (See deeds for final determination).

Witness my original signature, registration number and seal this 19th day of August, 2019.

DocuSigned by:
Aaron Perkinson
AA26A78ED0514F0...

Professional Land Surveyor PLS # L-5172 Seal

NOTES:

1. IF FURTHER INFORMATION REGARDING PROJECT CONTROL IS NEEDED, PLEASE CONTACT THE LOCATION AND SURVEYS UNIT.

2. PROJECT CONTROL WAS ESTABLISHED USING GNSS, THE GLOBAL NAVIGATION SATELLITE SYSTEM.

REVISIONS

6/2/99

20-AUG-2019 10:32
C:\Users\aaronperkinson\Documents\Hawkeye Geomatics PC\Projects\2019\NCDOT\950121\from Jarrett\95-0121ls_rw03e-1.dgn
A1 Perkinson

DocuSign Envelope ID: 0214811E-9BE5-4B64-BA3A-8A69EC4B6265

PERMANENT EASEMENT CONTROL SHEET

PROJECT REFERENCE NO.	SHEET NO.
95-0121	RW03E-2

Location and Surveys

HAWKEYE GEOMATICS, PC
135.5 MAIN STREET
OXFORD, NC 27565

PROJECT SURVEYOR

NORTH CAROLINA PROFESSIONAL L-5172 LAND SURVEYOR AARON J. PERKINSON

DOCUMENT NOT CONSIDERED FINAL UNLESS ALL SIGNATURES COMPLETED

ROW MARKER PERMANENT EASEMENT-E

ALIGN	STATION	OFFSET	NORTH	EAST
LREV	13+88.20	-30.00	595005.1924	2336320.3266
LREV	14+70.00	-81.00	595093.1528	2336364.9573
LREV	14+73.00	-64.00	595080.1036	2336376.2928
LREV	14+90.00	-85.00	595107.0371	2336380.7427
LREV	14+93.00	-68.00	595093.8800	2336391.9389
LREV	21+03.00	-88.00	595401.3610	2336925.4704
LREV	21+03.00	-104.00	595415.7330	2336918.4388
LREV	21+23.00	-104.00	595425.1212	2336938.0396
LREV	21+23.00	-88.00	595410.6339	2336944.8307
LREV	22+65.00	-99.00	595477.4598	2337082.8748
LREV	22+65.00	-84.00	595463.2213	2337087.5935
LREV	22+84.00	-99.00	595483.7750	2337102.4486
LREV	22+84.00	-84.00	595469.4637	2337106.9412
LREV	23+68.00	-100.00	595508.9249	2337189.8542
LREV	23+68.00	-84.00	595493.3616	2337193.5669
LREV	23+87.00	-100.00	595513.5425	2337209.9126
LREV	23+97.29	-83.05	595499.3335	2337224.3315
LREV	25+49.66	-70.24	595510.2982	2337386.4607

ROW MARKER PERMANENT EASEMENT-E

ALIGN	STATION	OFFSET	NORTH	EAST
Y1	11+52.77	55.00	595563.7428	2337375.8190

I, Aaron J Perkinson, a Professional Land Surveyor in the state of North Carolina hereby certify to the best of my knowledge and belief that the following work item(s) (Base map Compilation, R/W Staking) performed under my responsible charge meet NCDOT Survey Standards as directed in the NCDOT Location & Surveys guidelines and procedures.

I further certify that the data compiled came from available surveys/mapping performed by others and provided to me by NCDOT and do not certify to the accuracy or quality of the individual data sources.

I further certify that the right of way and permanent easement points shown herein and outlined in the tables shown hereon (localized coordinates, station/offset) have been checked and are accurate representations of the right of way and permanent easement points depicted on the corresponding highway plans. I also certify that the right of way and permanent easement points shown herein have been field monumented under my supervision from existing survey control provided by others; that the depicted property data shown herein were surveyed by others; and these monuments denote the right of way and easement boundaries at the time of staking which may be subject to change due to right of way revisions (See deeds for final determination).

Witness my original signature, registration number and seal this 19th day of August, 2019.

DocuSigned by:
Aaron Perkinson
AA26A78ED0514F0

L-5172

Professional Land Surveyor PLS # Seal

NOTES:

1. IF FURTHER INFORMATION REGARDING PROJECT CONTROL IS NEEDED, PLEASE CONTACT THE LOCATION AND SURVEYS UNIT.

2. PROJECT CONTROL WAS ESTABLISHED USING GNSS, THE GLOBAL NAVIGATION SATELLITE SYSTEM.

REVISIONS

6/2/99

20-AUG-2019 10:30
C:\Users\aaron.perkinson\Documents\Hawkeye Geomatics PC\Projects\2019\NCDOT\950121\from Jarrett\95-0121_ls_rw03e-2.dgn
Aaron Perkinson AT A1-USPS

DocuSign Envelope ID: 4471A088-6A20-479E-A7CD-064FC2C173D5

PROJECT REFERENCE NO.	SHEET NO.
95-0121	RW03E-2

Location and Surveys

HAWKEYE GEOMATICS, PC
135.5 MAIN STREET
OXFORD, NC 27565

I, Aaron J. Perkinson, a Professional Land Surveyor in the state of North Carolina hereby certify to the best of my knowledge and belief that the following work item(s) (Base map Compilation, R/W Staking) performed under my responsible charge meet NCDOT Survey Standards as directed in the NCDOT Location & Surveys guidelines and procedures.

I further certify that the data compiled came from available surveys/mapping performed by others and provided to me by NCDOT and do not certify to the accuracy or quality of the individual data sources.

I further certify that the right of way and permanent easement points shown herein and outlined in the tables shown hereon (localized coordinates, station/offset) have been checked and are accurate representations of the right of way and permanent easement points depicted on the corresponding highway plans. I also certify that the right of way and permanent easement points shown herein have been field monumented under my supervision from existing survey control provided by others; that the depicted property data shown herein were surveyed by others; and these monuments denote the right of way and easement boundaries at the time of staking which may be subject to change due to right of way revisions (See deeds for final determination).

Witness my original signature, registration number and seal this 19th day of August, 2019.

DocuSigned by:
Aaron Perkinson
AA26A38E0094FD...

Professional Land Surveyor L-5172 PLS * Seal

PROJECT SURVEYOR

NORTH CAROLINA PROFESSIONAL L-5172 LAND SURVEYOR AARON J. PERKINSON

DOCUMENT NOT CONSIDERED FINAL UNLESS ALL SIGNATURES COMPLETED

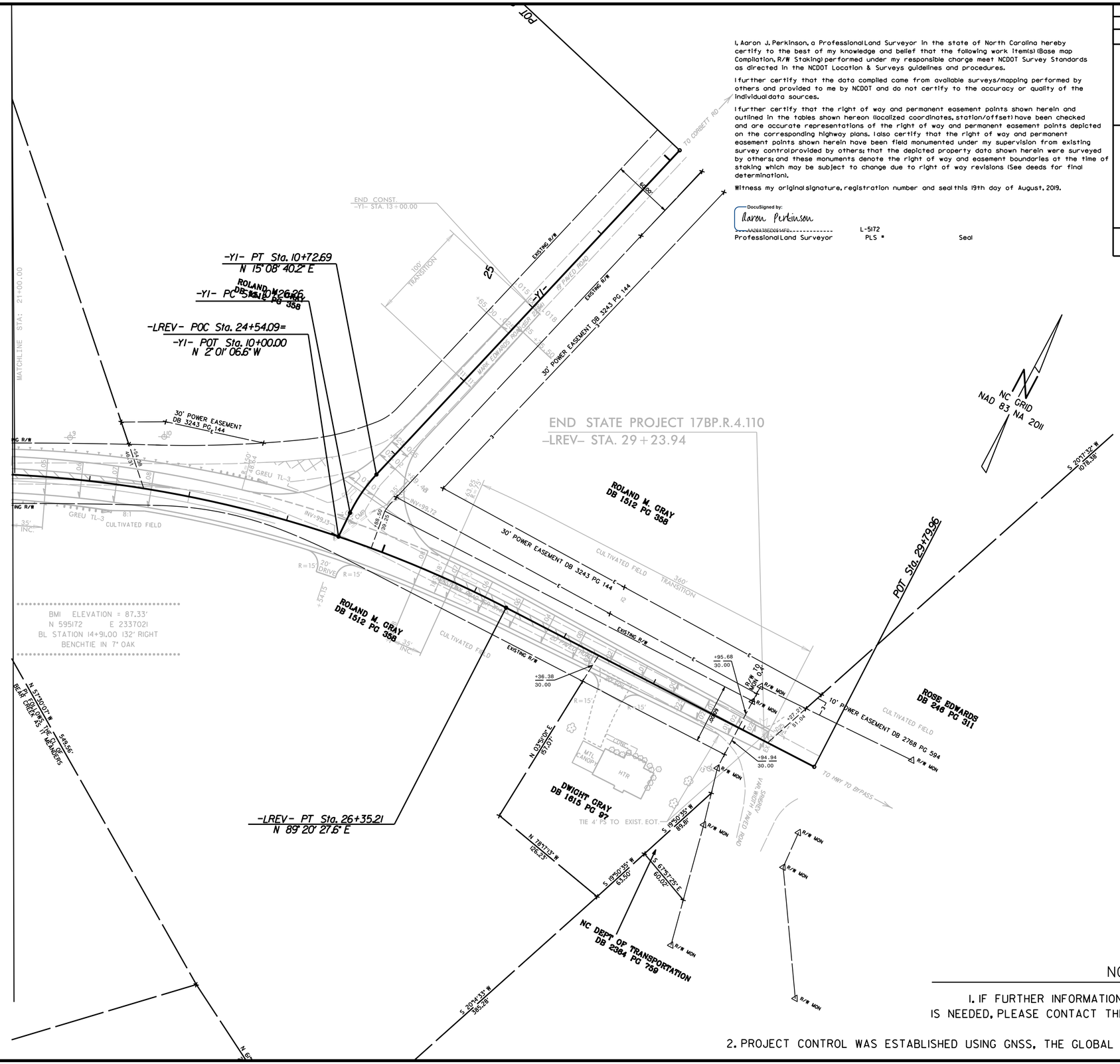

NOTES:

1. IF FURTHER INFORMATION REGARDING PROJECT CONTROL IS NEEDED, PLEASE CONTACT THE LOCATION AND SURVEYS UNIT.

2. PROJECT CONTROL WAS ESTABLISHED USING GNSS, THE GLOBAL NAVIGATION SATELLITE SYSTEM.

REVISIONS

6/2/99

22-AUG-2019 12:18
C:\Users\aaperkinson\Documents\Hawkeye Geomatics PC\Projects\2019\NCDOT\950121\from chase\95-0121_ls_rw04_2.dgn
$$$$USERNAME$$$$

DocuSign Envelope ID: 5C110618-8196-45B9-AB23-C412B2724AE5

I, Aaron J. Perkinson, a Professional Land Surveyor in the state of North Carolina hereby certify to the best of my knowledge and belief that the following work item(s) (Base map Compilation, R/W Staking) performed under my responsible charge meet NCDOT Survey Standards as directed in the NCDOT Location & Surveys guidelines and procedures.

I further certify that the data compiled came from available surveys/mapping performed by others and provided to me by NCDOT and do not certify to the accuracy or quality of the individual data sources.

I further certify that the right of way and permanent easement points shown herein and outlined in the tables shown hereon (localized coordinates, station/offset) have been checked and are accurate representations of the right of way and permanent easement points depicted on the corresponding highway plans. I also certify that the right of way and permanent easement points shown herein have been field monumented under my supervision from existing survey control provided by others; that the depicted property data shown herein were surveyed by others; and these monuments denote the right of way and easement boundaries at the time of staking which may be subject to change due to right of way revisions (See deeds for final determination).

Witness my original signature, registration number and seal this 21st day of August, 2019.

DocuSigned by:
Aaron Perkinson
AA26A78ED0514F0...

L-5172
Professional Land Surveyor PLS # Seal

PROJECT REFERENCE NO.	SHEET NO.
95-0121	RW04

Location and Surveys

HAWKEYE GEOMATICS, PC
135.5 MAIN STREET
OXFORD, NC 27565

PROJECT SURVEYOR

NORTH CAROLINA PROFESSIONAL L-5172 LAND SURVEYOR AARON J. PERKINSON

DOCUMENT NOT CONSIDERED FINAL UNLESS ALL SIGNATURES COMPLETED

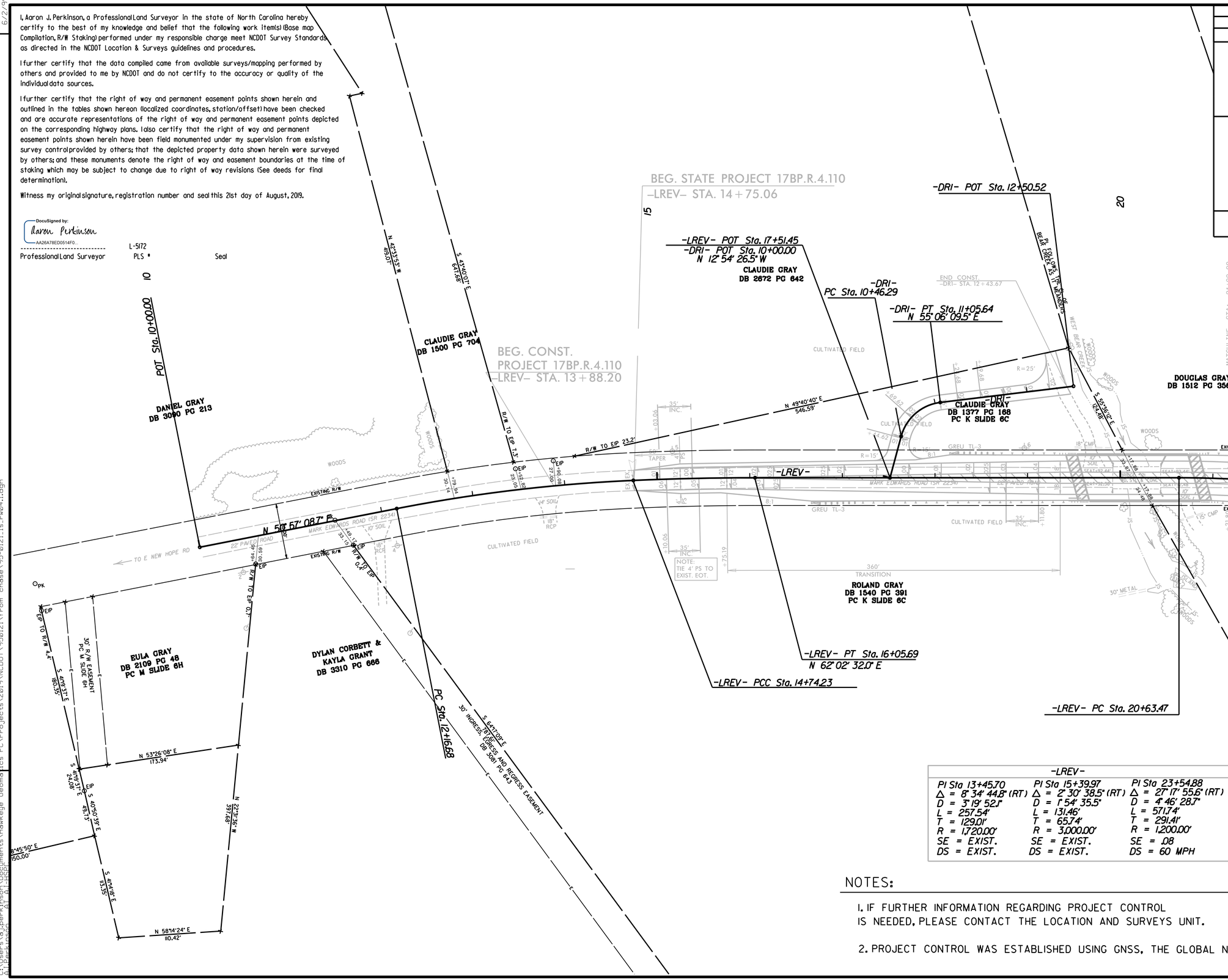

-LREV-		
PI Sta 13+45.70	PI Sta 15+39.97	PI Sta 23+54.88
Δ = 8° 34' 44.8" (RT)	Δ = 2° 30' 38.5" (RT)	Δ = 27° 17' 55.6" (RT)
D = 3° 19' 52.1"	D = 1° 54' 35.5"	D = 4° 46' 28.7"
L = 257.54'	L = 131.46'	L = 571.74'
T = 129.01'	T = 65.74'	T = 291.41'
R = 1,720.00'	R = 3,000.00'	R = 1,200.00'
SE = EXIST.	SE = EXIST.	SE = .08
DS = EXIST.	DS = EXIST.	DS = 60 MPH

NOTES:

1. IF FURTHER INFORMATION REGARDING PROJECT CONTROL IS NEEDED, PLEASE CONTACT THE LOCATION AND SURVEYS UNIT.

2. PROJECT CONTROL WAS ESTABLISHED USING GNSS, THE GLOBAL NAVIGATION SATELLITE SYSTEM.

REVISIONS

6/2/99

21-AUG-2019 16:41
C:\Users\aperkinson\Documents\Hawkeye Geomatics PC\Projects\2019\NCDOT\950121\from chase\95-0121_ls_rw04_1.dgn
A1 Perkinson AT A1 HSP

DocuSign Envelope ID: 9214F42C-8621-415C-951F-C74B1F69053A

STATE OF NORTH CAROLINA
DIVISION OF HIGHWAYS

TRANSPORTATION MANAGEMENT PLAN

WAYNE COUNTY

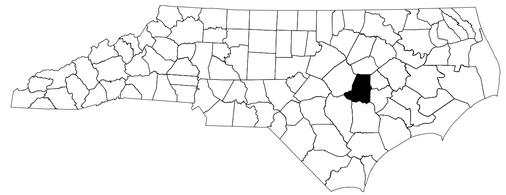

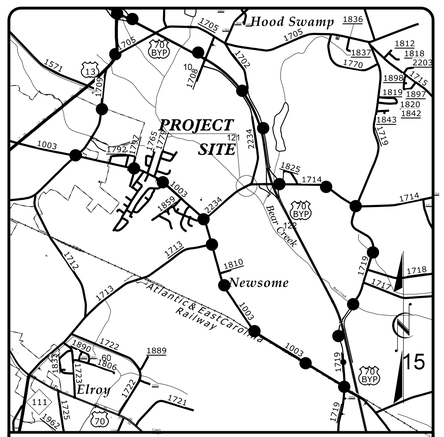

VICINITY MAP

OFF-SITE DETOUR

LOCATION: REPLACEMENT OF BRIDGE NO. 950121 OVER BEAR CREEK ON SR 2234 /SR 1714 (MARK EDWARDS RD./PARKSTOWN RD.).

TYPE OF WORK: GRADING, DRAINAGE, PAVING, STRUCTURE.

INDEX OF SHEETS

SHEET NO.	TITLE
TMP-01	TITLE SHEET, VICINITY MAP, AND INDEX OF SHEETS
TMP-01A	LIST OF APPLICABLE ROADWAY STANDARD DRAWINGS, AND LEGEND
TMP-01B	PROJECT NOTES (GENERAL NOTES & LOCAL NOTES) AND PHASING
TMP-02	SPECIAL SIGN DESIGN
TMP-03	SIGN AND DEVICE LEGEND
TMP-04	-LREV- OFFSITE DETOUR
TMP-05	-Y1- ROAD CLOSURE

SHEET NO.
TMP-01

17BP.4.R.110

TIP PROJECT:

DOCUMENT NOT CONSIDERED FINAL UNLESS ALL SIGNATURES COMPLETED

WORK ZONE SAFETY & MOBILITY
"from the MOUNTAINS to the COAST"

PLANS PREPARED BY:

GREG PERVIS, P.E.

D. ALLEN HAYES, E.I.

NCDOT CONTACTS:

J. S. KITE, P.E.
PROJECT ENGINEER

SPENCER JENNINGS
PROJECT DESIGN ENGINEER

WETHERILL ENGINEERING
1223 Jones Franklin Rd.
Raleigh, N.C. 27606
License No. F-0377
Bus: 919 851 8027
Fax: 919 851 8107

TRANSPORTATION PLANNING/DESIGN - BRIDGE/STRUCTURE DESIGN
CIVIL/SITE DESIGN - GIS/GPS - CONSTRUCTION OBSERVATION

APPROVED: DocuSigned by: Gary S. Purvis 01FB7C256E3403...

DATE: 9/24/2019

SEAL

NORTH CAROLINA PROFESSIONAL SEAL 22999 ENGINEER GREG S. PURVIS

8/8/2019
P:\2019\19103.01_Wayne_I21\Traffic\WZTC\TMP - old\Sheets\TO\Wayne_I21_Traffic_WZTC_TMP_Sheets_TO_01Title.dgn
User:AHayes

DocuSign Envelope ID: 9214F42C-8621-415C-951F-C74B1F69053A

PROJ. REFERENCE NO.	SHEET NO.
17BP.4.R.110	TMP-01A

ROADWAY STANDARD DRAWINGS

THE FOLLOWING ROADWAY STANDARDS AS SHOWN IN "ROADWAY STANDARD DRAWINGS" - N.C. DEPARTMENT OF TRANSPORTATION - RALEIGH, N.C., DATED JANUARY 2018 ARE APPLICABLE TO THIS PROJECT AND BY REFERENCE HEREBY ARE CONSIDERED A PART OF THESE PLANS:

STD. NO.	TITLE
1101.02	TEMPORARY LANE CLOSURES
1101.03	TEMPORARY ROAD CLOSURES
1101.04	TEMPORARY SHOULDER CLOSURES
1101.05	WORK ZONE VEHICLE ACCESSES
1101.11	TRAFFIC CONTROL DESIGN TABLES
1110.01	STATIONARY WORK ZONE SIGNS
1110.02	PORTABLE WORK ZONE SIGNS
1130.01	DRUMS
1145.01	BARRICADES
1150.01	FLAGGING DEVICES

LEGEND

GENERAL

NORTH ARROW

TRAFFIC CONTROL DEVICES

BARRICADE (TYPE III)

TEMPORARY SIGNING

STATIONARY SIGN

WETHERILL ENGINEERING
1223 Jones Franklin Rd.
Raleigh, N.C. 27606
License No. F-0377
Bus: 919 851 8077
Fax: 919 851 8107
TRANSPORTATION PLANNING/DESIGN - BRIDGE/STRUCTURE DESIGN
CIVIL/SITE DESIGN - GIS/GPS - CONSTRUCTION OBSERVATION

APPROVED: DocuSigned by: Greg S. Purvis D1F0F7C256E3403...

DATE: 9/24/2019

NORTH CAROLINA PROFESSIONAL SEAL 22999 ENGINEER GREG S. PURVIS

DOCUMENT NOT CONSIDERED FINAL UNLESS ALL SIGNATURES COMPLETED

DIVISION OF HIGHWAYS · STATE OF NORTH CAROLINA · DEPARTMENT OF TRANSPORTATION · WORK ZONE TRAFFIC CONTROL

ROADWAY STANDARD DRAWINGS & LEGEND

8/7/2019
P:\2019\19103.01_Wayne_I21\Traffic\WZTC\TMP\Sheets\TO\Wayne_I21_Traffic_WZTC_TMP_Sheets_TO_01A Legend.dgn
User:AHayes

DocuSign Envelope ID: 9214F42C-8621-415C-951F-C74B1F69053A

PROJ. REFERENCE NO.	SHEET NO.
17BP.4.R.110	TMP-01B

GENERAL NOTES

CHANGES MAY BE REQUIRED WHEN PHYSICAL DIMENSIONS IN THE DETAIL DRAWINGS, STANDARD DETAILS, AND ROADWAY DETAILS ARE NOT ATTAINABLE TO MEET FIELD CONDITIONS OR RESULT IN DUPLICATE OR UNDESIRED OVERLAPPING OF DEVICES. MODIFICATION MAY INCLUDE: MOVING, SUPPLEMENTING, COVERING, OR REMOVAL OF DEVICES AS DIRECTED BY THE ENGINEER.

THE FOLLOWING GENERAL NOTES APPLY AT ALL TIMES FOR THE DURATION OF THE CONSTRUCTION PROJECT EXCEPT WHEN OTHERWISE NOTED IN THE PLAN OR DIRECTED BY THE ENGINEER.

LANE AND SHOULDER CLOSURE REQUIREMENTS

A) REMOVE LANE CLOSURE DEVICES FROM THE LANE WHEN WORK IS NOT BEING PERFORMED BEHIND THE LANE CLOSURE OR WHEN A LANE CLOSURE IS NO LONGER NEEDED OR AS DIRECTED BY THE ENGINEER.

B) WHEN PERSONNEL AND/OR EQUIPMENT ARE WORKING WITHIN 15 FT OF AN OPEN TRAVEL LANE, CLOSE THE NEAREST OPEN SHOULDER USING ROADWAY STANDARD DRAWING NO. 1101.04 UNLESS THE WORK AREA IS PROTECTED BY BARRIER OR GUARDRAIL OR A LANE CLOSURE IS INSTALLED.

C) WHEN PERSONNEL AND/OR EQUIPMENT ARE WORKING ON THE SHOULDER ADJACENT TO AN UNDIVIDED FACILITY AND WITHIN 5 FT OF AN OPEN TRAVEL LANE, CLOSE THE NEAREST OPEN TRAVEL LANE USING ROADWAY STANDARD DRAWING NO. 1101.02 UNLESS THE WORK AREA IS PROTECTED BY BARRIER OR GUARDRAIL.

D) WHEN PERSONNEL AND/OR EQUIPMENT ARE WORKING WITHIN A LANE OF TRAVEL OF AN UNDIVIDED OR DIVIDED FACILITY, CLOSE THE LANE ACCORDING TO THE TRAFFIC CONTROL PLANS, ROADWAY STANDARD DRAWINGS, OR AS DIRECTED BY THE ENGINEER. CONDUCT THE WORK SO THAT ALL PERSONNEL AND/OR EQUIPMENT REMAIN WITHIN THE CLOSED TRAVEL LANE.

E) DO NOT WORK SIMULTANEOUSLY WITHIN 15 FT ON BOTH SIDES OF AN OPEN TRAVELWAY, RAMP, OR LOOP WITHIN THE SAME LOCATION UNLESS PROTECTED WITH GUARDRAIL OR BARRIER.

F) DO NOT INSTALL MORE THAN ONE LANE CLOSURE IN ANY ONE DIRECTION ON -LREV- (SR 1702 MARK EDWARDS RD) OR -Y1- (SR 1714 PARKSTOWN RD).

G) PROVIDE TRAFFIC CONTROL FOR APPROPRIATE LANE CLOSURES FOR SURVEYING DONE BY THE DEPARTMENT.

PAVEMENT EDGE DROP OFF REQUIREMENTS

H) BACKFILL AT A 6:1 SLOPE UP TO THE EDGE AND ELEVATION OF EXISTING PAVEMENT IN AREAS ADJACENT TO AN OPENED TRAVEL LANE THAT HAS AN EDGE OF PAVEMENT DROP-OFF AS FOLLOWS:

BACKFILL DROP-OFFS THAT EXCEED 2 INCHES ON ROADWAYS WITH POSTED SPEED LIMITS OF 45 MPH OR GREATER.

BACKFILL DROP-OFFS THAT EXCEED 3 INCHES ON ROADWAYS WITH POSTED SPEED LIMITS LESS THAN 45 MPH.

BACKFILL WITH SUITABLE COMPACTED MATERIAL, AS APPROVED BY THE ENGINEER, AT NO EXPENSE TO THE DEPARTMENT.

I) DO NOT EXCEED A DIFFERENCE OF 2 INCHES IN ELEVATION BETWEEN OPEN LANES OF TRAFFIC FOR NOMINAL LIFTS OF 1.5 INCHES. INSTALL ADVANCE WARNING "UNEVEN LANES" SIGNS (W8-11) 500 FT/MI IN ADVANCE AND A MINIMUM OF EVERY HALF MILE THROUGHOUT THE UNEVEN AREA.

TRAFFIC PATTERN ALTERATIONS

J) NOTIFY THE ENGINEER THIRTY (30) CALENDAR DAYS PRIOR TO ANY TRAFFIC PATTERN ALTERATION.

SIGNING

K) PROVIDE SIGNING AND DEVICES REQUIRED TO CLOSE THE ROAD ACCORDING TO THE ROADWAY STANDARD DRAWINGS AND TRAFFIC CONTROL PLANS.

PROVIDE SIGNING REQUIRED FOR THE OFF-SITE DETOUR ROUTE AS SHOWN IN THE TRAFFIC CONTROL PLANS.

L) COVER OR REMOVE ALL SIGNS AND DEVICES REQUIRED TO CLOSE THE ROAD WHEN ROAD CLOSURE IS NOT IN OPERATION.

COVER OR REMOVE ALL SIGNS REQUIRED FOR THE OFF-SITE DETOUR WHEN THE DETOUR IS NOT IN OPERATION.

M) ENSURE ALL NECESSARY SIGNING IS IN PLACE PRIOR TO ALTERING ANY TRAFFIC PATTERN.

N) INSTALL BLACK ON ORANGE "DIP" SIGNS (W8-2) AND/OR "BUMP" SIGNS (W8-1) 500 FT/MI IN ADVANCE OF THE UNEVEN AREA, OR AS DIRECTED BY THE ENGINEER.

TRAFFIC CONTROL DEVICES

O) WHEN LANE CLOSURES ARE NOT IN EFFECT SPACE CHANNELIZING DEVICES IN WORK AREAS NO GREATER IN FEET THAN TWICE THE POSTED SPEED LIMIT (MPH) EXCEPT, 10 FT ON-CENTER IN RADII, AND 3 FT OFF THE EDGE OF AN OPEN TRAVELWAY. REFER TO STANDARD SPECIFICATIONS FOR ROADS AND STRUCTURES SECTIONS 1130 (DRUMS), 1135 (CONES) AND 1180 (SKINNY DRUMS) FOR ADDITIONAL REQUIREMENTS.

P) PLACE TYPE III BARRICADES, WITH "ROAD CLOSED" SIGN R11-2 ATTACHED, OF SUFFICIENT LENGTH TO CLOSE ENTIRE ROADWAY.

PAVEMENT MARKINGS AND MARKERS

Q) TIE PROPOSED PAVEMENT MARKING LINES TO EXISTING PAVEMENT MARKING LINES.

LOCAL NOTES

PHASING

STEP 1) INSTALL ALL OFFSITE DETOUR SIGNING AND ROAD CLOSURE SIGNING FOR -LREV- NO MORE THAN THREE (3) DAYS PRIOR TO CONSTRUCTION. IF CONSTRUCTION HAS NOT BEGUN WITHIN THREE (3) DAYS OF INSTALLATION, REMOVE OR COVER SIGNS USING AN APPROVED METHOD PER THE DISCRETION OF THE ENGINEER. [SEE SHEETS TMP-02 - 04]

STEP 2) AWAY FROM TRAFFIC BEGIN CONSTRUCTION OF -LREV- (SR 2234/SR 1714 MARK EDWARDS RD/PARKSTOWN ROAD) FROM THE BEGIN CONSTRUCTION LIMITS TO STA. 24+00 +/- UP TO BUT NOT INCLUDING THE FINAL LIFT OF SURFACE COURSE. [REFER TO THE ROADWAY PLANS]

USING ROADWAY STANDARD DRAWING 1101.02, WIDEN -LREV- FROM STA. 24+00 +/- TO THE END CONSTRUCTION LIMITS AND -Y1- UP TO THE EXISTING EDGE AND ELEVATION. [REFER TO THE ROADWAY PLANS]

THE CONTRACTOR SHALL COMPLETE STEPS 3 AND 4 WITHIN 14 CONSECUTIVE CALENDAR DAYS. SEE INTERMEDIATE CONTRACT TIME AND LIQUIDATED DAMAGES.

STEP 3) INSTALL ROAD CLOSURE SIGNING AND DEVICES FOR -Y1- (SR 1702 MARK EDWARDS RD), CLOSE -Y1-, REPLACE TYPE III BARRICADES 'E' AT THE ACCESS ROAD WITH TYPE III BARRICADES 'A' AT STA. 24+00 +/- -LREV-, CLOSE -Y1-, AND WEDGE -LREV- AND -Y1- UP TO BUT NOT INCLUDING THE FINAL LIFT OF SURFACE COURSE. [SEE SHEETS TMP-03, 05, AND ROADWAY PLANS]

COMPLETE CONSTRUCTION OF -LREV- BEGUN IN STEP 2.

STEP 4) AWAY FROM TRAFFIC INSTALL THE FINAL LIFT OF SURFACE COURSE AND FINAL PAVEMENT MARKINGS, AND OPEN THE ENTIRE PROJECT TO THE FINAL TRAFFIC PATTERN. [SEE THE FINAL PAVEMENT MARKING PLAN]

STEP 5) REMOVE ALL ROAD CLOSURE SIGNING, OFFSITE DETOUR SIGNING, AND TRANSPORATION MANAGEMENT DEVICES.

ETHERILL ENGINEERING
1223 Jones Franklin Rd.
Raleigh, N.C. 27606
License No. F-0377
Bus: 919 851 8077
Fax: 919 851 8107
TRANSPORTATION PLANNING/DESIGN - BRIDGE/STRUCTURE DESIGN
CIVIL/SITE DESIGN - GIS/GPS - CONSTRUCTION OBSERVATION

APPROVED: DocuSigned by: Greg S. Purvis D1F0F7C25B63403...

DATE: 9/24/2019

NORTH CAROLINA PROFESSIONAL SEAL 22999 ENGINEER GREG S. PURVIS

DOCUMENT NOT CONSIDERED FINAL UNLESS ALL SIGNATURES COMPLETED

DIVISION OF HIGHWAYS · STATE OF NORTH CAROLINA · DEPARTMENT OF TRANSPORTATION · WORK ZONE TRAFFIC CONTROL

PROJECT NOTES (GENERAL NOTES & LOCAL NOTES) AND PHASING

8/7/2019
P:\2019\19103.01_Wayne_I21\Traffic\WZTC\TMP\Sheets\TO\Wayne_I21_Traffic_WZTC_TMP_Sheets_TO_01B Phasing.dgn
User:AHayes

DocuSign Envelope ID: 9214F42C-8621-415C-951F-C74B1F69053A

PROJ. REFERENCE NO.	SHEET NO.
17BP.4.R.110	TMP-02

SIGN NUMBER: name
TYPE: STATIONARY
QUANTITY: SEE PLANS

SIGN WIDTH: 3'-9"
HEIGHT: 3'-9"
TOTAL AREA: 14.1 Sq.Ft.

BORDER TYPE: INSET
RECESS: 0.47"
WIDTH: 0.63"
RADII: 1.5"

NO. Z BARS:
LENGTH:

BACKG COLOR: Fluorescent Orange
COPY COLOR: Black

SYMBOL	X	Y	WID	HT

MAT'L: 0.080" (2.0 mm) ALUMINUM

USE NOTES: 1,2

1. Legend and border shall be direct applied black non-reflective sheeting.
2. Background shall be NC GRADE B fluorescent orange retroreflective sheeting.

DESIGN BY: DAH
PROJECT ID: 17BP.4.R

CHECKED BY: SLK
LOCATION: OFFSITE DETOUR

May 30, 2019
DIV: 4

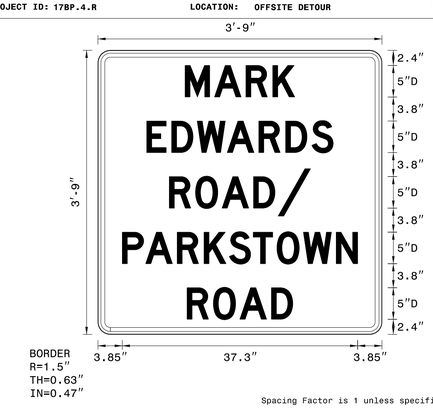

Spacing Factor is 1 unless specified otherwise

LETTER POSITIONS

Letter locations are panel edge to lower left corner

																										Series/Size Text Length
	M	A	R	K																						D 2000
	13.8	18.4	23.4	27.7																						17.4
	E	D	W	A	R	D	S																			D 2000
	7.7	11.7	15.7	20.5	25.5	29.7	33.9																			29.6
	R	O	A	D	/																					D 2000
	11.3	15.4	19.6	24.6	28.5																					22.4
	P	A	R	K	S	T	O	W	N																	D 2000
	3.9	7.6	12.6	16.8	20.8	24.6	28.4	32.6	37.8																	37.3
	R	O	A	D																						D 2000
	14.1	18.3	22.5	27.5																						16.8

FILENAME: 2019_19103.01_Wayne_121_Traffic_WZTC_TMP_REF_BSSD

NORTH CAROLINA D.O.T. SIGN DETAIL

ETHERILL ENGINEERING
1223 Jones Franklin Rd.
Raleigh, N.C. 27606
License No. F-0377
Bus: 919 851 8077
Fax: 919 851 8107
TRANSPORTATION PLANNING/DESIGN - BRIDGE/STRUCTURE DESIGN
CIVIL/SITE DESIGN - GIS/GPS - CONSTRUCTION OBSERVATION

APPROVED: DocuSigned by: Greg S. Purvis
DATE: 9/24/2019

NORTH CAROLINA PROFESSIONAL SEAL 22999 ENGINEER GREG S. PURVIS

DOCUMENT NOT CONSIDERED FINAL
UNLESS ALL SIGNATURES COMPLETED

DIVISION OF HIGHWAYS
STATE OF NORTH CAROLINA
DEPARTMENT OF TRANSPORTATION
WORK ZONE TRAFFIC CONTROL

SPECIAL SIGN DESIGN

8/7/2019
P:\2019\19103.01_Wayne_121\Traffic\WZTC\TMP\Sheets\TO\Wayne_121_Traffic_WZTC_TMP_Sheets_TO_02 SSD.dgn
User:AHayes

DocuSign Envelope ID: 9214F42C-8621-415C-951F-C74B1F69053A

PROJ. REFERENCE NO.	SHEET NO.
17BP.4.R.110	TMP-03

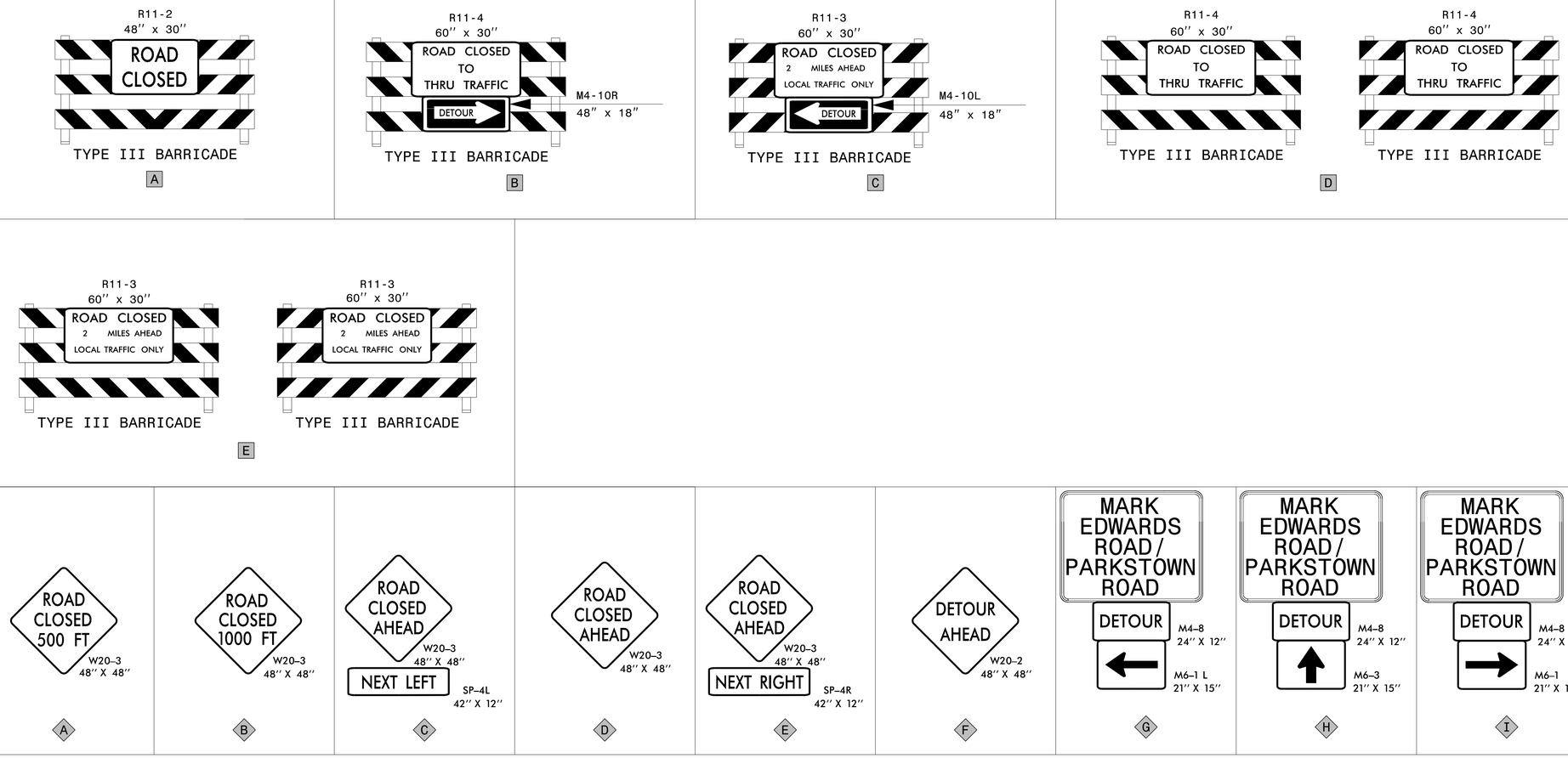

ETHERILL ENGINEERING
1223 Jones Franklin Rd.
Raleigh, N.C. 27606
License No. F-0377
Bus: 919 851 8077
Fax: 919 851 8107
TRANSPORTATION PLANNING/DESIGN - BRIDGE/STRUCTURE DESIGN
CIVIL/SITE DESIGN - GIS/GPS - CONSTRUCTION OBSERVATION

APPROVED: DocuSigned by: Greg S. Purvis D1F0F7C2586E3403...

DATE: 9/24/2019

NORTH CAROLINA PROFESSIONAL SEAL 22999 ENGINEER GREG S. PURVIS

DOCUMENT NOT CONSIDERED FINAL UNLESS ALL SIGNATURES COMPLETED

DIVISION OF HIGHWAYS · STATE OF NORTH CAROLINA · DEPARTMENT OF TRANSPORTATION · WORK ZONE TRAFFIC CONTROL

SIGN AND DEVICE LEGEND

8/7/2019
P:\2019\19103.01_Wayne.I21\Traffic\WZTC\TMP\Sheets\T0\Wayne.I21_Traffic_WZTC_TMP_Sheets_T0_03 SDL.dgn
User:AHayes

DocuSign Envelope ID: 9214F42C-8621-415C-951F-C74B1F69053A

PROJ. REFERENCE NO.	SHEET NO.
17BP.4.R.110	TMP-04

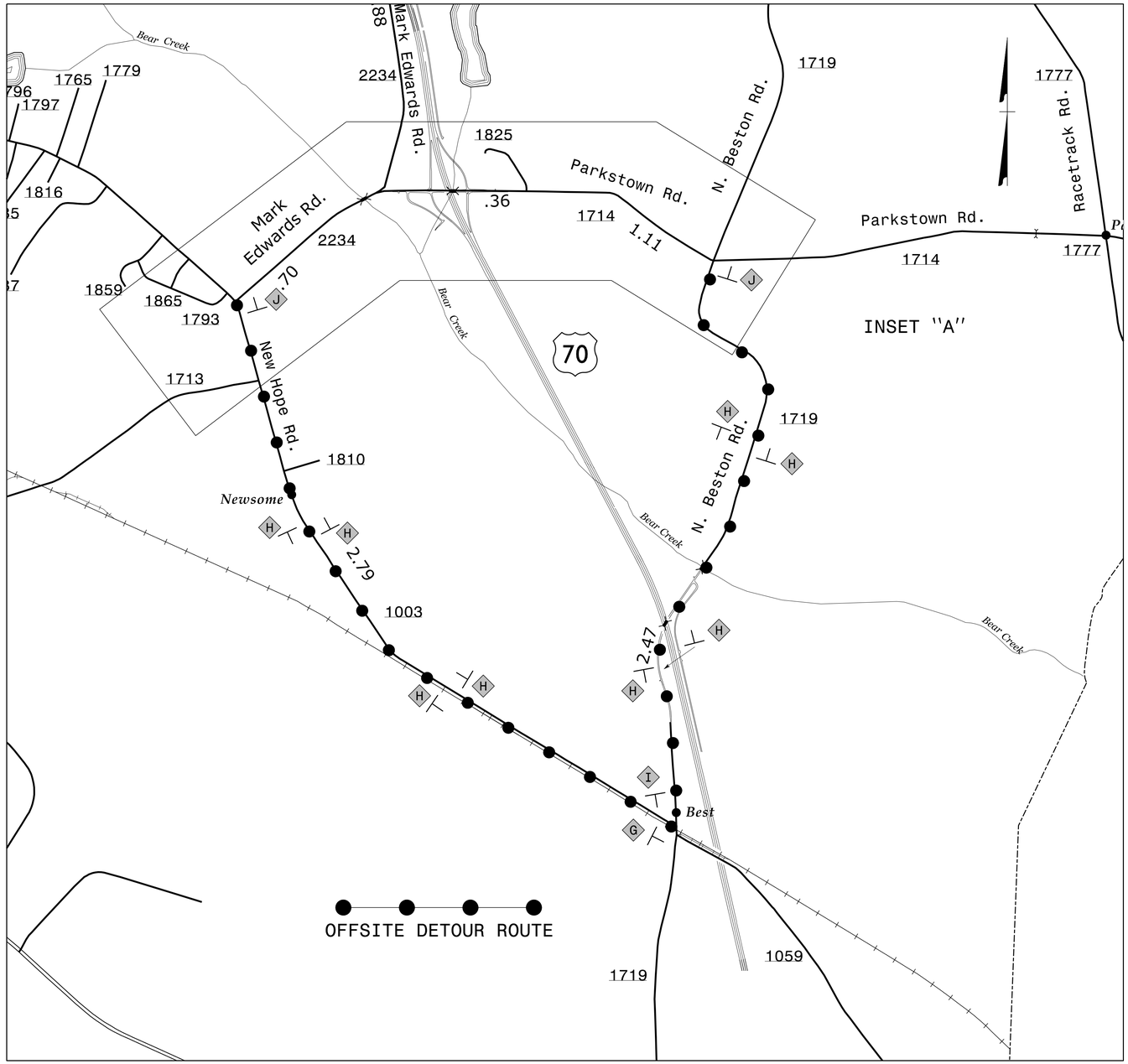

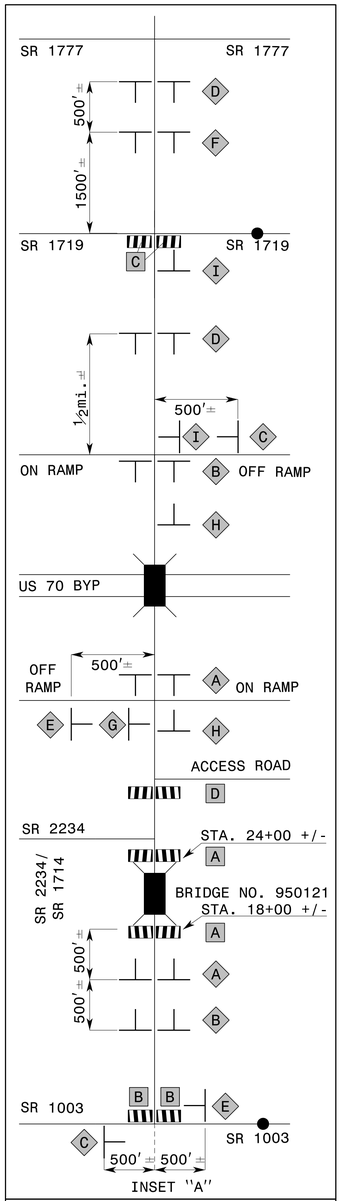

REFER TO ROADWAY STANDARD DRAWING 1101.03, SHEET 1 OF 9 FOR APPLICABLE NOTES.

NOTE: SEE SHEET TMP-03 FOR SIGNS AND DEVICES.

ETHERILL ENGINEERING
1223 Jones Franklin Rd.
Raleigh, N.C. 27606
License No. F-0377
Bus: 919 851 8077
Fax: 919 851 8107
TRANSPORTATION PLANNING/DESIGN - BRIDGE/STRUCTURE DESIGN
CIVIL/SITE DESIGN - GIS/GPS - CONSTRUCTION OBSERVATION

APPROVED: DocuSigned by: Greg S. Purvis 8F9F4C29B24B43...

DATE: 9/24/2019

NORTH CAROLINA PROFESSIONAL SEAL 22999 ENGINEER GREG S. PURVIS

DOCUMENT NOT CONSIDERED FINAL UNLESS ALL SIGNATURES COMPLETED

DIVISION OF HIGHWAYS STATE OF NORTH CAROLINA DEPARTMENT OF TRANSPORTATION WORK ZONE TRAFFIC CONTROL

-LREV- OFFSITE DETOUR

8/7/2019
P:\2019\19103.01_Wayne.12\Traffic\WZTC\TMP\Sheets\DTL\Wayne_12i_Traffic_WZTC_TMP_Sheets_DTL_04 LREV OSD.dgn
User:AHayes

DocuSign Envelope ID: 9214F42C-8621-415C-951F-C74B1F69053A

PROJ. REFERENCE NO.	SHEET NO.
17BP.4.R.110	TMP-05

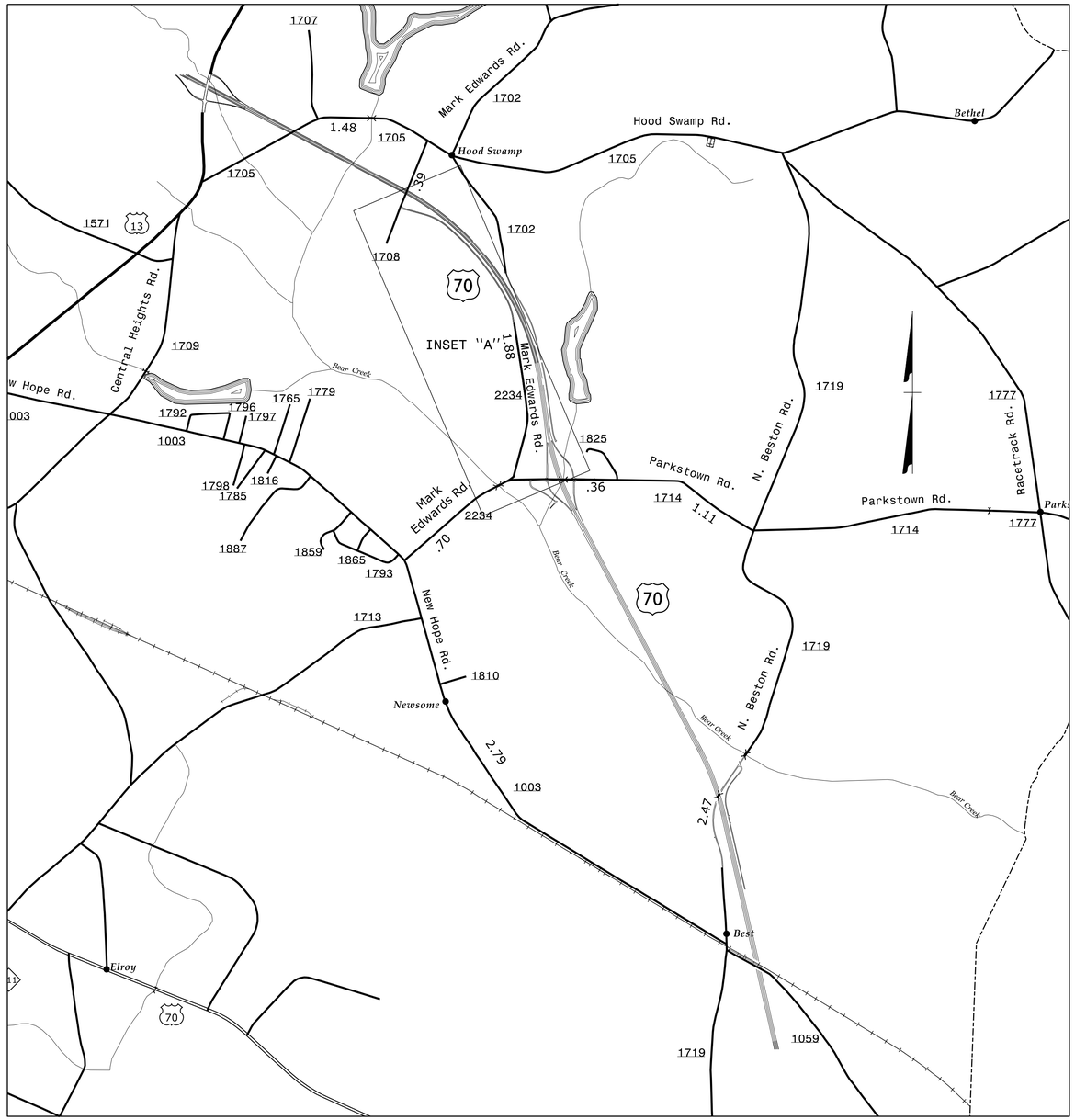

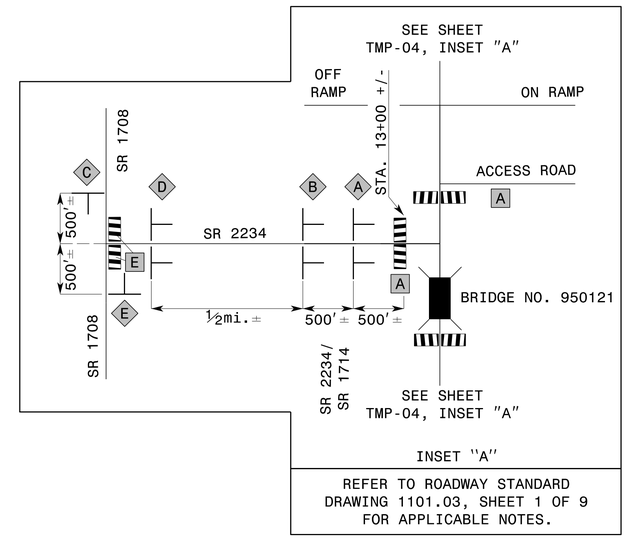

REFER TO ROADWAY STANDARD DRAWING 1101.03, SHEET 1 OF 9 FOR APPLICABLE NOTES.

NOTE: SEE SHEET TMP-03 FOR SIGNS AND DEVICES.

ETHERILL ENGINEERING
1223 Jones Franklin Rd.
Raleigh, N.C. 27606
License No. F-0377
Bus: 919 851 8077
Fax: 919 851 8107
TRANSPORTATION PLANNING/DESIGN - BRIDGE/STRUCTURE DESIGN
CIVIL/SITE DESIGN - GIS/GPS - CONSTRUCTION OBSERVATION

APPROVED: DocuSigned by: Greg S. Purvis D1F0F7C256E3403...

DATE: 9/24/2019

NORTH CAROLINA PROFESSIONAL SEAL 22999 ENGINEER GREG S. PURVIS

DOCUMENT NOT CONSIDERED FINAL UNLESS ALL SIGNATURES COMPLETED

DIVISION OF HIGHWAYS · STATE OF NORTH CAROLINA · DEPARTMENT OF TRANSPORTATION · WORK ZONE TRAFFIC CONTROL

-Y1- ROAD CLOSURE

8/7/2019
P:\2019\19103.01_Wayne_I21\Traffic\WZTC\TMP\Sheets\DTL\Wayne_I21_Traffic_WZTC_TMP_Sheets_DTL_05 YIRC.dgn
User:AHayes

DocuSign Envelope ID: 9214F42C-8621-415C-951F-C74B1F69053A

T.I.P.: 17BP.4.R.110

CONTRACT: N/A

TIP NO.	SHEET NO.
17BP.4.R.110	PMP-01

APPROVED: DocuSigned by: Greg S. Purvis D1F0F7C29E3403 9/24/2019

DATE:

SEAL

NORTH CAROLINA PROFESSIONAL SEAL 22999 ENGINEER GREG S. PURVIS

DOCUMENT NOT CONSIDERED FINAL UNLESS ALL SIGNATURES COMPLETED

STATE OF NORTH CAROLINA
DEPARTMENT OF TRANSPORTATION

PAVEMENT MARKING PLAN
WAYNE COUNTY

INDEX

SHEET NO.	DESCRIPTION
PMP-01	PAVEMENT MARKING PLAN TITLE AND SCHEDULE SHEET
PMP-02	PAVEMENT MARKING DETAIL

ROADWAY STANDARD DRAWING

THE FOLLOWING ROADWAY STANDARDS AS APPEAR IN "ROADWAY STANDARD DRAWINGS" - PROJECT SERVICES UNIT - N.C. DEPARTMENT OF TRANSPORTATION - RALEIGH, N.C., DATED JANUARY 2018 ARE APPLICABLE TO THIS PROJECT AND BY REFERENCE HEREBY ARE CONSIDERED A PART OF THESE PLANS:

STD. NO.	TITLE
1205.01	PAVEMENT MARKINGS - LINE TYPES AND OFFSETS
1205.02	PAVEMENT MARKINGS - TWO-LANE AND MULTILANE ROADWAYS
1205.04	PAVEMENT MARKINGS - INTERSECTIONS
1205.05	PAVEMENT MARKINGS - TURN LANES
1205.08	PAVEMENT MARKINGS - SYMBOLS AND WORD MESSAGES
1205.09	PAVEMENT MARKINGS - PAINTED ISLANDS
1205.12	PAVEMENT MARKINGS - BRIDGES
1261.01	GUARDRAIL AND BARRIER DELINEATORS - INSTALLATION SPACING
1261.02	GUARDRAIL AND BARRIER DELINEATORS - TYPES AND MOUNTING
1262.01	GUARDRAIL END DELINEATION
1264.01	OBJECT MARKERS - TYPES
1264.02	OBJECT MARKERS - INSTALLATION

GENERAL NOTES

THE FOLLOWING GENERAL NOTES APPLY AT ALL TIMES FOR THE DURATION OF THE CONSTRUCTION PROJECT, EXCEPT WHEN OTHERWISE NOTED IN THE PLAN, OR DIRECTED BY THE ENGINEER.

A) INSTALL PAVEMENT MARKINGS AND PAVEMENT MARKERS ON THE FINAL SURFACE AS FOLLOWS:

ROAD NAME	MARKING	MARKER
1. ALL ROADWAYS	THERMOPLASTIC	N/A
2. BRIDGE DECK	COLD APPLIED PLASTIC (TYPE III)	N/A

B) TIE PROPOSED PAVEMENT MARKING LINES TO EXISTING PAVEMENT MARKING LINES.

C) REMOVE/REPLACE ANY CONFLICTING/DAMAGED PAVEMENT MARKINGS AND MARKERS.

D) PASSING ZONES WILL BE DETERMINED IN THE FIELD AND MUST BE APPROVED BY THE ENGINEER.

E) REMOVE ALL RESIDUE AND SURFACE LAITANCE BY ACCEPTABLE METHODS ON CONCRETE BRIDGE DECKS PRIOR TO PLACING COLD APPLIED PLASTIC (TYPE III) PAVEMENT MARKING MATERIAL.

F) UNLESS OTHERWISE SPECIFIED, HEATED-IN-PLACE THERMOPLASTIC MAY BE USED IN LIEU OF EXTRUDED THERMOPLASTIC FOR STOP BARS, SYMBOLS, CHARACTERS AND DIAGONALS. IF HEATED-IN-PLACE IS USED, IT SHALL BE PAID FOR USING THE EXTRUDED THERMOPLASTIC PAY ITEM.

G) UNLESS OTHERWISE SPECIFIED, HEATED-IN-PLACE THERMOPLASTIC MAY BE USED IN LIEU OF COLD APPLIED PLASTIC FOR STOP BARS, SYMBOLS, CHARACTERS AND DIAGONALS ON ASPHALT OR CONCRETE ROADWAYS. IF HEATED-IN-PLACE IS USED, IT SHALL BE PAID FOR USING THE COLD APPLIED PAY ITEM.

FINAL PAVEMENT MARKING SCHEDULE

SYMBOL	DESCRIPTION		PAY ITEM
CA	WHITE SOLID LINE	(4", TYPE III)	COLD APPLIED
CI	YELLOW DOUBLE CENTER	(4", TYPE III)	COLD APPLIED
CV	YELLOW DIAGONAL	(12", TYPE III)	COLD APPLIED
T8	2 FT. - 6 FT./SP WHITE MINISKIP	(4", 90 MILS)	THERMOPLASTIC
TA	WHITE SOLID LINE	(4", 90 MILS)	THERMOPLASTIC
TD	3 FT. - 9 FT./SP WHITE MINISKIP	(4", 90 MILS)	THERMOPLASTIC
TI	YELLOW DOUBLE CENTER	(4", 90 MILS)	THERMOPLASTIC
TV	YELLOW DIAGONAL	(12", 90 MILS)	THERMOPLASTIC
UA	LEFT TURN ARROW	(90 MILS)	THERMOPLASTIC

PLAN SUBMITTED TO:

AYMAN ALQUDWAH, P.E., SIGNING & DELINEATION REGIONAL ENGINEER

STATE OF NORTH CAROLINA DEPARTMENT OF TRANSPORTATION

PLAN PREPARED BY: WETHERILL ENGINEERING, INC.

GREG PERVIS, P.E. PROJECT MANAGER

D. ALLEN HAYES, E.I. TRANSPORTATION ENGINEER

WETHERILL ENGINEERING

1223 Jones Franklin Rd.
Raleigh, N.C. 27606
License No. F-0377
Bus: 919 851 8077
Fax: 919 851 8107

TRANSPORTATION PLANNING/DESIGN - BRIDGE/STRUCTURE DESIGN
CIVIL/SITE DESIGN - GIS/GPS - CONSTRUCTION OBSERVATION

8/7/2019
11:28:19
User:dHayes
...19103.01_Wayne_121\Traffic\Signing and Delineation\Pavement Markings\Sheets\Wayne_121Traffic_S&D_PM_Sheets_01 Title.dgn

DocuSign Envelope ID: 9214F42C-8621-415C-951F-C74B1F69053A

TIP NO.	SHEET NO.
17BP.4.R.110	PMP-02

APPROVED: DocuSigned by: Greg S. Purvis D1F0F7C29BE3403...

DATE: 9/24/2019

SEAL

NORTH CAROLINA PROFESSIONAL SEAL 22999 ENGINEER GREG S. PURVIS

DOCUMENT NOT CONSIDERED FINAL UNLESS ALL SIGNATURES COMPLETED

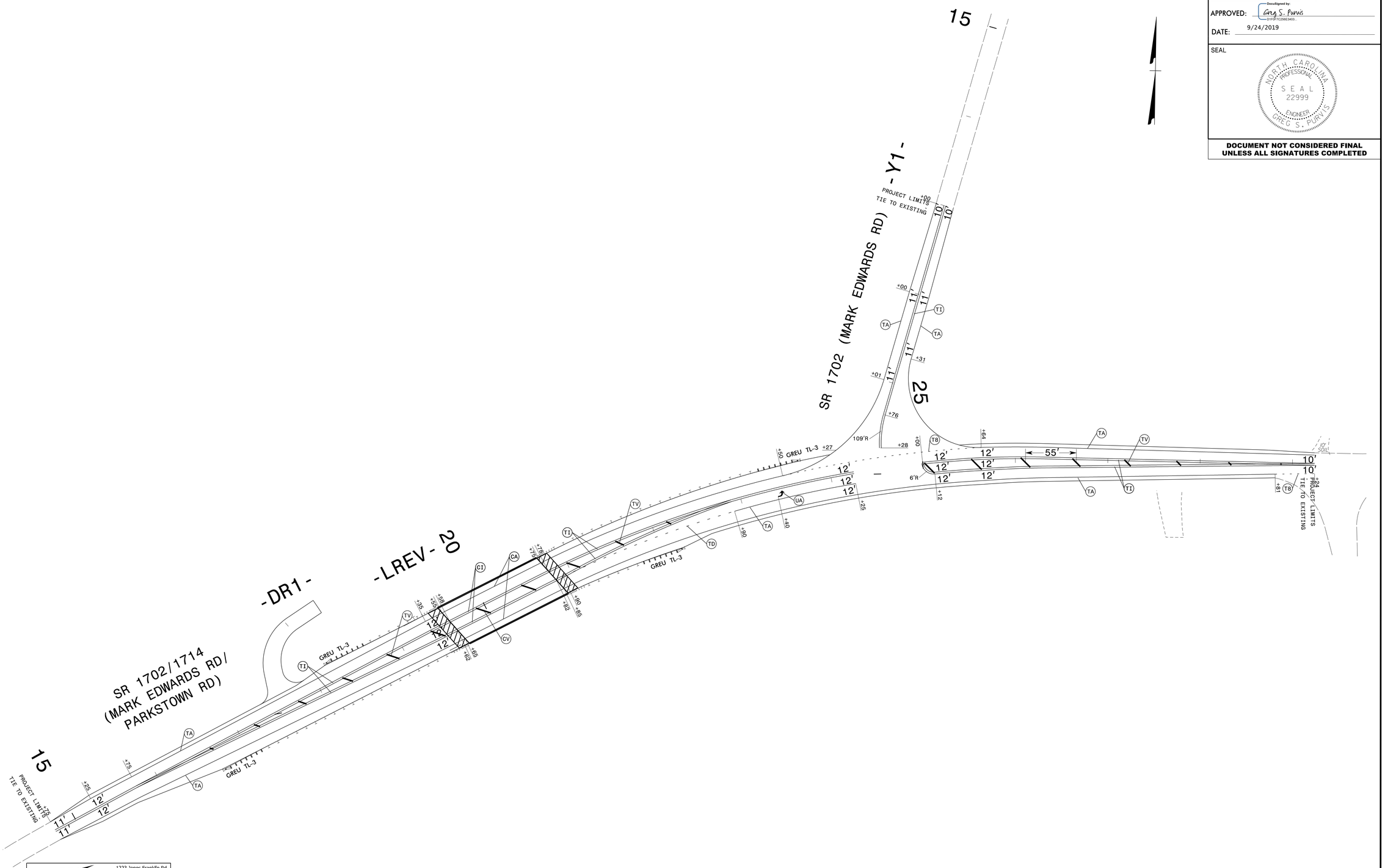

ETHERILL ENGINEERING
1223 Jones Franklin Rd.
Raleigh, N.C. 27606
License No. F-0377
Bus: 919 851 8077
Fax: 919 851 8107
TRANSPORTATION PLANNING/DESIGN - BRIDGE/STRUCTURE DESIGN
CIVIL/SITE DESIGN - GIS/GPS - CONSTRUCTION OBSERVATION

PAVEMENT MARKING DETAIL

8/7/2019
R:\2019\19103.01_Wayne_I2\Traffic\Signing and Delineation\Pavement Markings\Sheets\Wayne_I2\Traffic_S&D_PM_Sheets_02 DTL.dgn
User:AHoyes

TIP PROJECT: 17BP.4.R.110

STATE	STATE PROJECT REFERENCE NO.	SHEET NO.	TOTAL SHEETS
N.C.	17BP.4.R.110	EC-1	

STATE PROJ. NO.	F. A. PROJ. NO.	DESCRIPTION

STATE OF NORTH CAROLINA
DIVISION OF HIGHWAYS

PLAN FOR PROPOSED
HIGHWAY EROSION CONTROL

WAYNE COUNTY

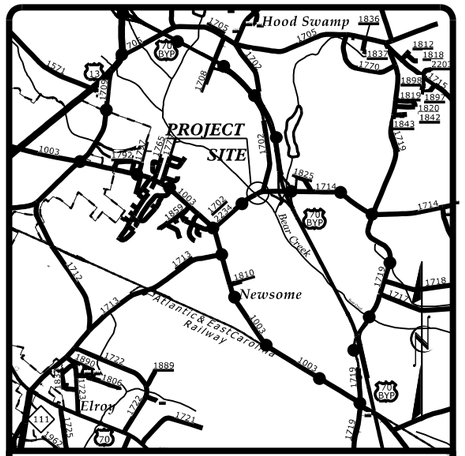

VICINITY MAP

OFF–SITE DETOUR

NAD 83/ NSRS 2011

LOCATION: ***REPLACEMENT OF BRIDGE NO. 950121 OVER BEAR CREEK ON SR 2234 /SR 1714 (MARK EDWARDS RD./PARKSTOWN RD.).***

TYPE OF WORK: GRADING, DRAINAGE, PAVING, STRUCTURE.

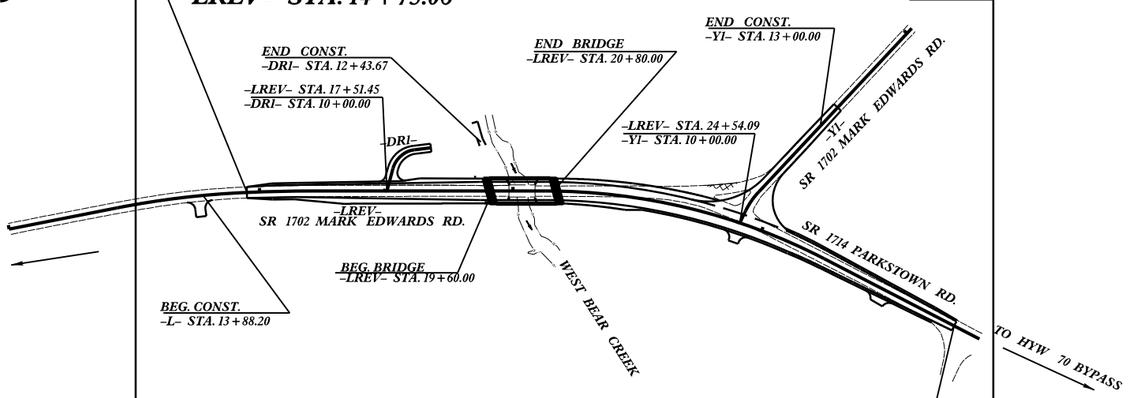

EROSION AND SEDIMENT CONTROL MEASURES

Std. #	Description	Symbol
1630.03	Temporary Silt Ditch	TSD
1630.05	Temporary Diversion	TD
1605.01	Temporary Silt Fence	
1606.01	Special Sediment Control Fence	
1622.01	Temporary Berms and Slope Drains	
1630.02	Silt Basin Type B	
1633.01	Temporary Rock Silt Check Type–A	
	Temporary Rock Silt Check Type–A with Matting and Polyacrylamide (PAM)	
1633.02	Temporary Rock Silt Check Type–B	
	Wattle / Coir Fiber Wattle	SW CFW
	Wattle / Coir Fiber Wattle with Polyacrylamide (PAM)	
1634.01	Temporary Rock Sediment Dam Type–A	
1634.02	Temporary Rock Sediment Dam Type–B	
1635.01	Rock Pipe Inlet Sediment Trap Type–A	
1635.02	Rock Pipe Inlet Sediment Trap Type–B	
1630.04	Stilling Basin	
1630.06	Special Stilling Basin	
	Rock Inlet Sediment Trap:	
1632.01	Type A	A
1632.02	Type B	B
1632.03	Type C	C
	Skimmer Basin	
	Tiered Skimmer Basin	
	Infiltration Basin	

THIS PROJECT CONTAINS EROSION CONTROL PLANS FOR CLEARING AND GRUBBING PHASE OF CONSTRUCTION.

ENVIRONMENTALLY SENSITIVE AREA(S) EXIST ON THIS PROJECT

Refer To E. C. Special Provisions for Special Considerations.

THIS PROJECT HAS BEEN DESIGNED TO SENSITIVE WATERSHED STANDARDS.

THIS IS A NON CONTROLLED–ACCESS PROJECT.
CLEARING ON THIS PROJECT SHALL BE PERFORMED TO THE LIMITS ESTABLISHED BY METHOD II.
THIS PROJECT IS NOT WITHIN ANY MUNICIPAL BOUNDARIES.
DESIGN EXCEPTION NEEDED FOR BRIDGE WIDTH.

GRAPHIC SCALE

0
PLANS

0
PROFILE (HORIZONTAL)

0
PROFILE (VERTICAL)

THESE EROSION AND SEDIMENT CONTROL PLANS COMPLY WITH THE REGULATIONS SET FORTH BY THE NCG–010000 GENERAL CONSTRUCTION PERMIT EFFECTIVE AUGUST 1, 2016 AND ISSUED BY THE NORTH CAROLINA DEPARTMENT OF ENVIRONMENT QUALITY DIVISION OF WATER RESOURCES.

Prepared in the Office of:

WETHERILL ENGINEERING

1223 JONES FRANKLIN RD
RALEIGH, NC 27606

Designed by:

HARMINDER SINGH — *3519*
NAME — *LEVEL III CERTIFICATION NO.*

Reviewed in the Office of:

ROADSIDE ENVIRONMENTAL UNIT

1 South Wilmington St.
Raleigh, NC 27611

2018 STANDARD SPECIFICATIONS

Reviewed by:

XXXX XXXX

Roadway Standard Drawings

The following roadway english standards as appear in "Roadway Standard Drawings"– Roadway Design Unit – N. C. Department of Transportation – Raleigh, N. C., dated January 2018 and the latest revison thereto are applicable to this project and by reference hereby are considered a part of these plans.

1604.01	Railroad Erosion Control Detail	1632.01	Rock Inlet Sediment Trap Type A
1605.01	Temporary Silt Fence	1632.02	Rock Inlet Sediment Trap Type B
1606.01	Special Sediment Control Fence	1632.03	Rock Inlet Sediment Trap Type C
1607.01	Gravel Construction Entrance	1633.01	Temporary Rock Silt Check Type A
1622.01	Temporary Berms and Slope Drains	1633.02	Temporary Rock Silt Check Type B
1630.01	Riser Basin	1634.01	Temporary Rock Sediment Dam Type A
1630.02	Silt Basin Type B	1634.02	Temporary Rock Sediment Dam Type B
1630.03	Temporary Silt Ditch	1635.01	Rock Pipe Inlet Sediment Trap Type A
1630.04	Stilling Basin	1635.02	Rock Pipe Inlet Sediment Trap Type B
1630.05	Temporary Diversion	1640.01	Coir Fiber Baffle
1630.06	Special Stilling Basin	1645.01	Temporary Stream Crossing
1631.01	Matting Installation		

SYSTIME
DGN
BERNAME
USERNAME

PROJECT REFERENCE NO.	SHEET NO.
17BP.4.R.110	EC-2
ROADWAY DESIGN ENGINEER	HYDRAULICS ENGINEER

DIVISION OF HIGHWAYS
STATE OF NORTH CAROLINA

SOIL STABILIZATION TIMEFRAMES

SITE DESCRIPTION	STABILIZATION TIME	TIMEFRAME EXCEPTIONS
PERIMETER DIKES, SWALES, DITCHES AND SLOPES	7 DAYS	NONE
HIGH QUALITY WATER (HQW) ZONES	7 DAYS	NONE
SLOPES STEEPER THAN 3:1	7 DAYS	IF SLOPES ARE 10' OR LESS IN LENGTH AND ARE NOT STEEPER THAN 2:1, 14 DAYS ARE ALLOWED.
SLOPES 3:1 OR FLATTER	14 DAYS	7 DAYS FOR SLOPES GREATER THAN 50' IN LENGTH.
ALL OTHER AREAS WITH SLOPES FLATTER THAN 4:1	14 DAYS	NONE, EXCEPT FOR PERIMETERS AND HQW ZONES.

PROJECT REFERENCE NO.	SHEET NO.
17BP.4.R.J10	EC-2A
ROADWAY DESIGN ENGINEER	HYDRAULICS ENGINEER

DIVISION OF HIGHWAYS
STATE OF NORTH CAROLINA

SOIL STABILIZATION SUMMARY SHEET

MATTING FOR EROSION CONTROL

CONST SHEET NO.	LINE	FROM STATION	TO STATION	SIDE	ESTIMATE (SY)
4	-LREV-	14+75	15+00	LT	20
	-LREV-	15+50	20+00	RT	315
	-LREV-	19+25	19+75	LT	35
	-LREV-	20+50	22+00	LT	105
	-LREV-	20+80	23+00	LT	155
	-LREV-	24+75	26+50	RT	125
	-Y1-	11+00	12+50	LT	105
	-Y1-	10+50	12+50	RT	140
				SUBTOTAL	1000
MISCELLANEOUS MATTING TO BE INSTALLED AS DIRECTED BY THE ENGINEER					
				TOTAL	1000
				SAY	1000

PERMANENT SOIL REINFORCEMNT MAT

CONST SHEET NO.	LINE	FROM STATION	TO STATION	SIDE	ESTIMATE (SY)

PROJECT REFERENCE NO.	SHEET NO.
17BP.4.RJ10	EC-3
R/W SHEET NO.	
ROADWAY DESIGN ENGINEER	HYDRAULICS ENGINEER

TEMPORARY ROCK SILT CHECK TYPE 'A' WITH EXCELSIOR MATTING AND POLYACRYLAMIDE (PAM)

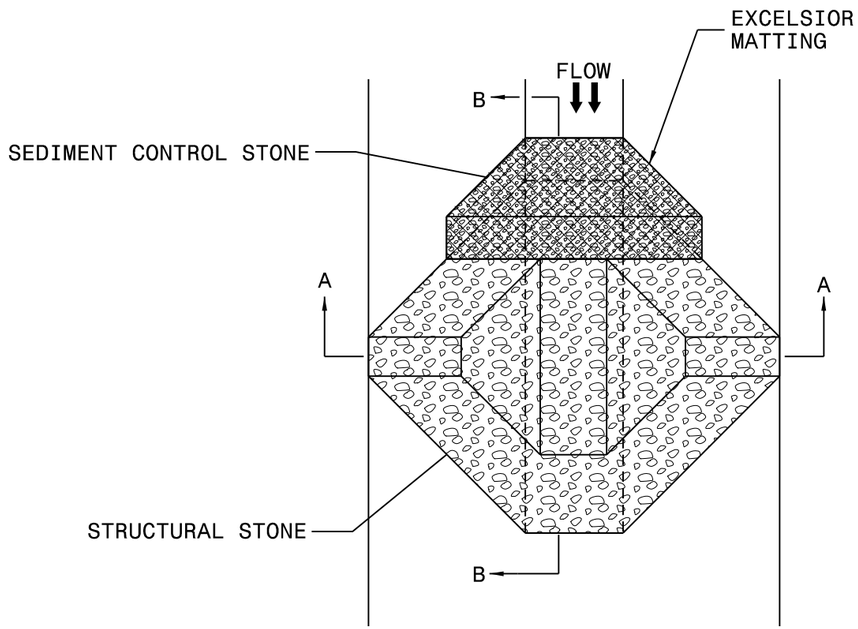

PLAN

NOTES:

INSTALL TEMPORARY ROCK SILT CHECK TYPE A IN ACCORDANCE WITH ROADWAY STANDARD DRAWING NO. 1633.01.

USE EXCELSIOR FOR MATTING MATERIAL AND ANCHOR MATTING SECTION AT TOP AND BOTTOM WITH CLASS B STONE.

PRIOR TO POLYACRYLAMIDE (PAM) APPLICATION, OBTAIN A SOIL SAMPLE FROM PROJECT LOCATION, AND FROM OFFSITE MATERIAL, AND ANALYZE FOR APPROPRIATE PAM FLOCCULANT TO BE APPLIED TO EACH ROCK SILT CHECK.

INITIALLY APPLY 4 OUNCES OF POLYACRYLAMIDE (PAM) TO TOP OF MATTING SECTION AND AFTER EVERY RAINFALL EVENT THAT EQUALS OR EXCEEDS 0.50 INCHES.

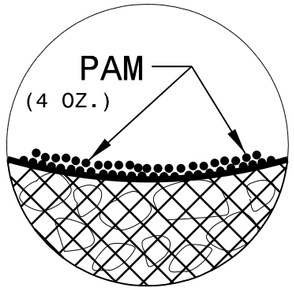

INSET A

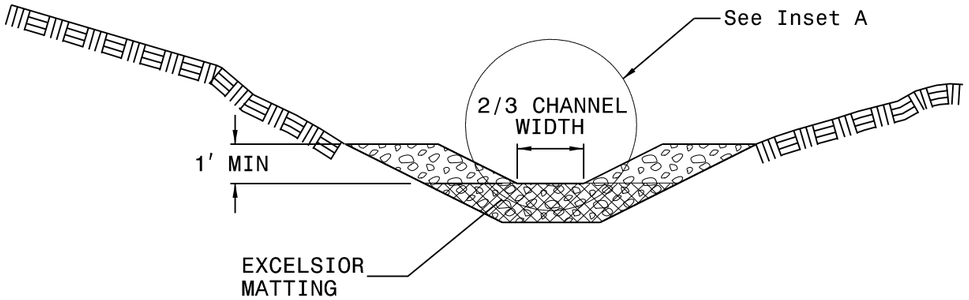

SECTION A-A

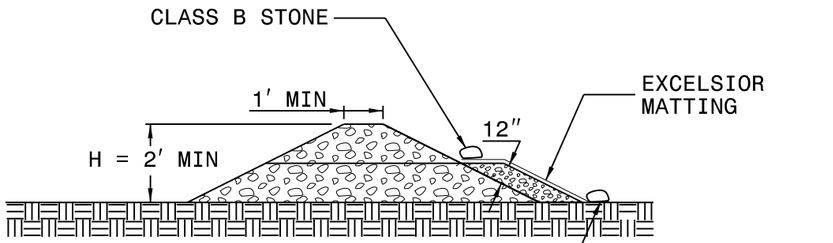

SECTION B-B

NOT TO SCALE

PROJECT REFERENCE NO.	SHEET NO.
17BP.4.RJ10	EC-3A
R/W SHEET NO.	
ROADWAY DESIGN ENGINEER	HYDRAULICS ENGINEER

EARTHEN DAM WITH SKIMMER DETAIL (EAST)

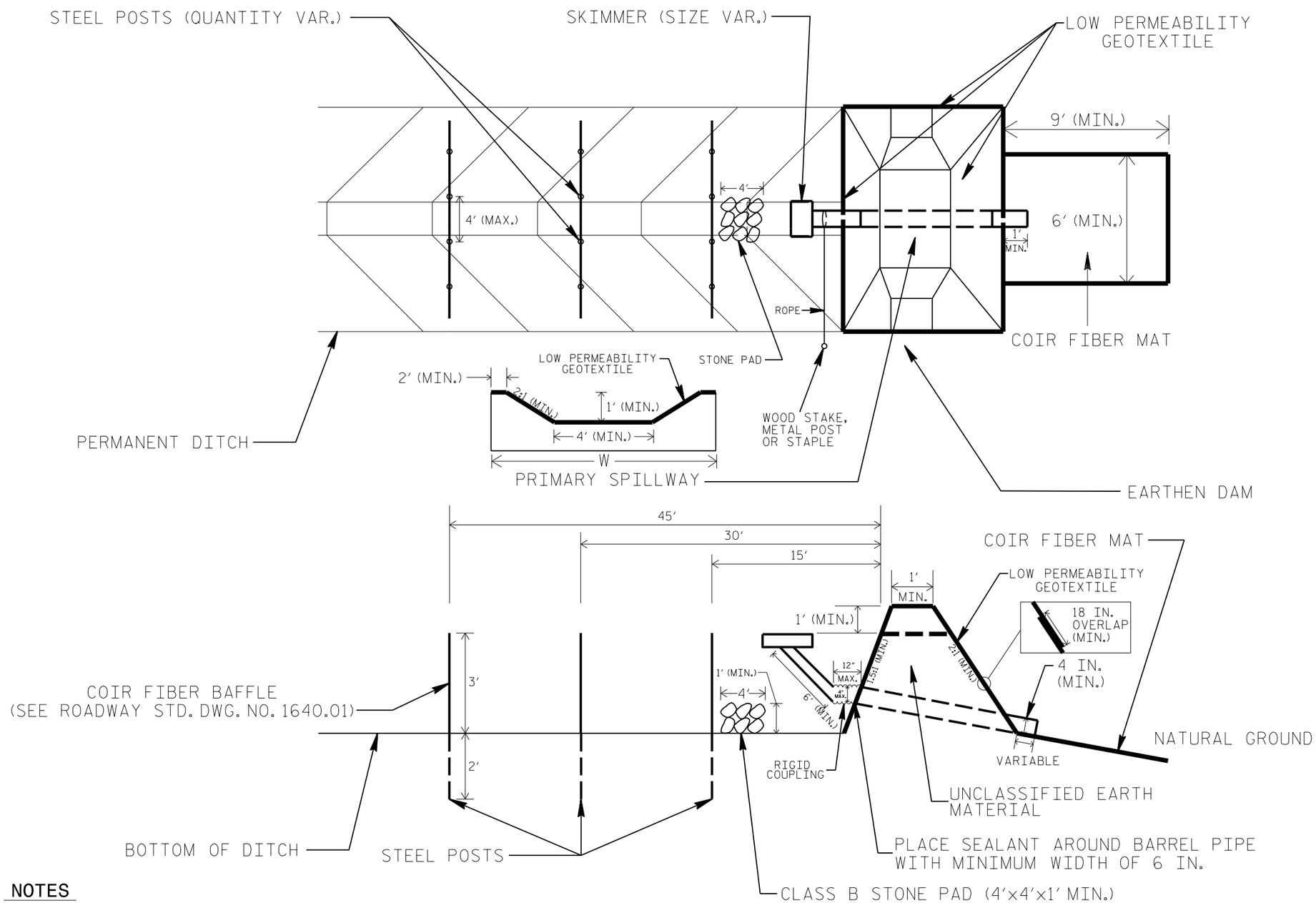

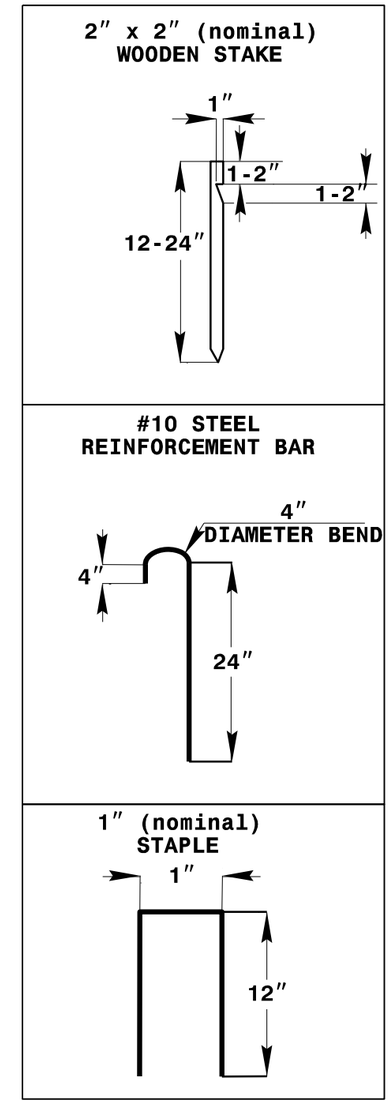

COIR FIBER MAT ANCHOR OPTIONS

NOTES

1. LIMIT EARTHEN DAM HEIGHT TO 5 FT.
2. DETERMINE PRIMARY SPILLWAY LENGTH (FT.) USING Q/0.8, WHERE Q IS FLOW RATE (CFS) INTO BASIN.
3. LOW PERMEABILITY GEOTEXTILE FOR PRIMARY SPILLWAY SHALL BE ONE CONTINUOUS PIECE OF MATERIAL OR OVERLAPPED 18 IN. (MIN.).

NOT TO SCALE

8/17/99

REVISIONS

WETHERILL ENGINEERING
1223 Jones Franklin Rd.
Raleigh, N.C. 27606
License No. F-0377
Bus: 919 851 8077
Fax: 919 851 8107
TRANSPORTATION PLANNING/DESIGN - BRIDGE/STRUCTURE DESIGN
CIVIL/SITE DESIGN - GIS/GPS - CONSTRUCTION OBSERVATION

PROJECT REFERENCE NO.	SHEET NO.
17BP.4.R.110	EC-04/CONST.04
ROADWAY DESIGN ENGINEER	HYDRAULICS ENGINEER

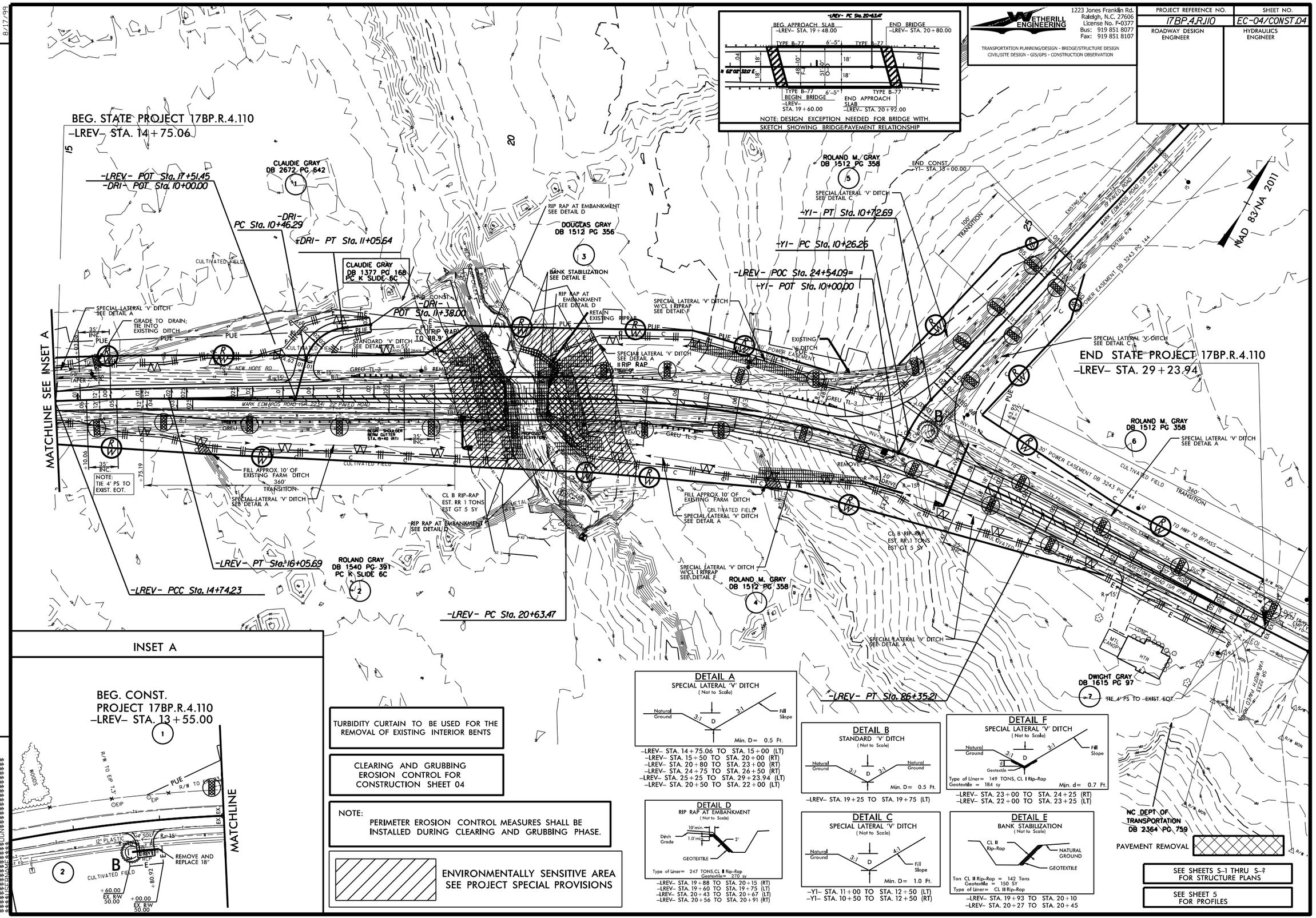

8/17/99

REVISIONS

Place Matting for Erosion Control on Slopes Adjacent to Permitted Wetlands as Work Allows.

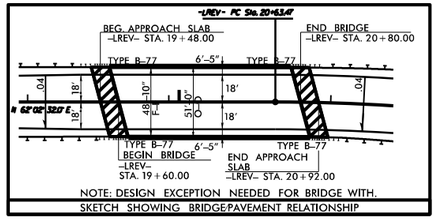

NOTE: DESIGN EXCEPTION NEEDED FOR BRIDGE WITH.

SKETCH SHOWING BRIDGE/PAVEMENT RELATIONSHIP

WETHERILL ENGINEERING
1223 Jones Franklin Rd.
Raleigh, N.C. 27606
License No. F-0377
Bus: 919 851 8077
Fax: 919 851 8107

TRANSPORTATION PLANNING/DESIGN - BRIDGE/STRUCTURE DESIGN
CIVIL/SITE DESIGN - GIS/GPS - CONSTRUCTION OBSERVATION

PROJECT REFERENCE NO.	SHEET NO.
17BP.4.R.110	EC-05/CONST.04
ROADWAY DESIGN ENGINEER	HYDRAULICS ENGINEER

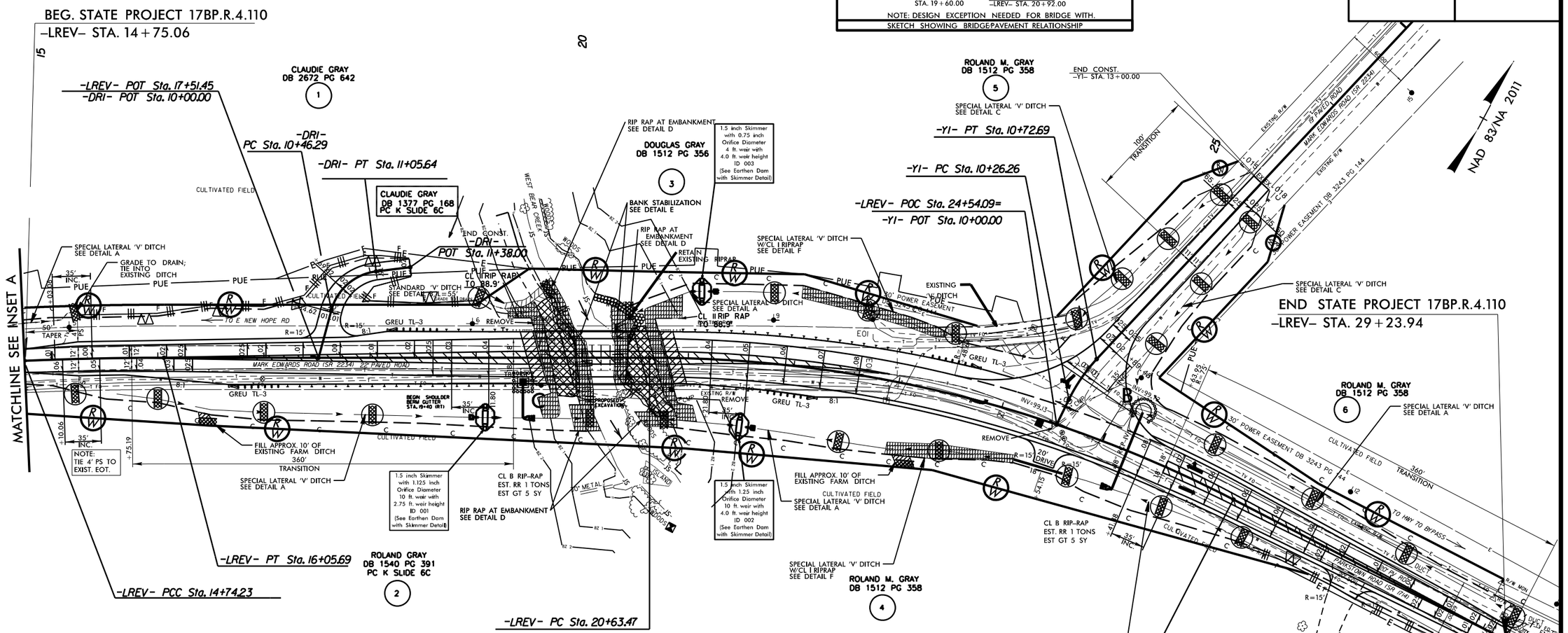
BEG. STATE PROJECT 17BP.R.4.110
-LREV- STA. 14+75.06
MATCHLINE SEE INSET A
CLAUDIE GRAY DB 2672 PG 642
-LREV- POT Sta. 17+51.45
-DRI- POT Sta. 10+00.00
-DRI- PC Sta. 10+46.29
-DRI- PT Sta. 11+05.64
CLAUDIE GRAY DB 1377 PG 168 PC K SLIDE 6C
END CONST. -DRI- POT Sta. 11+38.00
DOUGLAS GRAY DB 1512 PG 356
RIP RAP AT EMBANKMENT SEE DETAIL D
BANK STABILIZATION SEE DETAIL E
1.5 inch Skimmer with 0.75 inch Orifice Diameter 4 ft. weir with 4.0 ft. weir height ID 003 (See Earthen Dam with Skimmer Detail)
ROLAND M. GRAY DB 1512 PG 358
END CONST. -Y1- STA. 13+00.00
-Y1- PT Sta. 10+72.69
-Y1- PC Sta. 10+26.26
-LREV- POC Sta. 24+54.09= -Y1- POT Sta. 10+00.00
100' TRANSITION
END STATE PROJECT 17BP.R.4.110
-LREV- STA. 29+23.94
NAD 83/NA 2011
SPECIAL LATERAL 'V' DITCH SEE DETAIL A
GRADE TO DRAIN; TIE INTO EXISTING DITCH
SPECIAL LATERAL 'V' DITCH SEE DETAIL C
SPECIAL LATERAL 'V' DITCH W/CL I RIPRAP SEE DETAIL F
CULTIVATED FIELD
MARK EDWARDS ROAD (SR 2234) 22' PAVED ROAD
TO E NEW HOPE RD
NOTE: TIE 4' PS TO EXIST. EOT.
FILL APPROX. 10' OF EXISTING FARM DITCH
360' TRANSITION
1.5 inch Skimmer with 1.125 inch Orifice Diameter 10 ft. weir with 2.75 ft. weir height ID 001 (See Earthen Dam with Skimmer Detail)
CL B RIP-RAP EST. RR 1 TONS EST GT 5 SY
RIP RAP AT EMBANKMENT SEE DETAIL D
1.5 inch Skimmer with 1.25 inch Orifice Diameter 10 ft. weir with 4.0 ft. weir height ID 002 (See Earthen Dam with Skimmer Detail)
ROLAND GRAY DB 1540 PG 391 PC K SLIDE 6C
-LREV- PT Sta. 16+05.69
-LREV- PCC Sta. 14+74.23
-LREV- PC Sta. 20+63.47
ROLAND M. GRAY DB 1512 PG 358
SPECIAL LATERAL 'V' DITCH W/CL I RIPRAP SEE DETAIL F
-LREV- PT Sta. 26+35.21
DWIGHT GRAY DB 1615 PG 97
TIE 4' PS TO EXIST. EOT.
NC DEPT OF TRANSPORTATION DB 2364 PG 759
30' POWER EASEMENT DB 3243 PG 144
TO HWY 70 BYPASS
PAMPLICO ROAD (SR 1140)
MTL CANOPY
HTR
EXISTING R/W
REMOVE
GREU TL-3
8:1
R=15'
20' DRIVE
INV=99.13
INV=99.25
EOI
PUE
WOODS
WEST BEAR CREEK
ISLAND
10' METAL
BEGIN SHOULDER BERM GUTTER STA. 19+40 (RT)
PROPOSED EXCAVATION
EXISTING R/W
R/W MON
VAR. WIDTH PAVED ROAD
DITCH
EXISTING DITCH
TAPER
50'
35' INC.
+10.06
+75.19
+63.25
R=25'
+03.00
+01.62
+01.61
+01.80
+00.00
+00.12
+00.25
+00.50
+00.60
+00.70
+00.80
+00.90
+01.00
+01.10
+01.20
+01.30
+01.40
+01.50
+01.60
+01.70
+01.80
+01.90
+02.00
+02.10
+02.20
+02.30
+02.40
+02.50
+02.60
+02.70
+02.80
+02.90
+03.00
+03.10
+03.20
+03.30
+03.40
+03.50
+03.60
+03.70
+03.80
+03.90
+04.00
+04.10
+04.20
+04.30
+04.40

STATE	STATE PROJECT REFERENCE NO.	SHEET NO.	TOTAL SHEETS
N.C.	17BP.4.R.110	RF-1	
STATE PROJ. NO.	F.A. PROJ. NO.	DESCRIPTION	

PLANTING DETAILS

SEEDLING / LINER BAREROOT PLANTING DETAIL

HEALING IN

1. Locate a healing-in site in a shady, well protected area.
2. Excavate a flat bottom trench 12 inches deep and provide drainage.

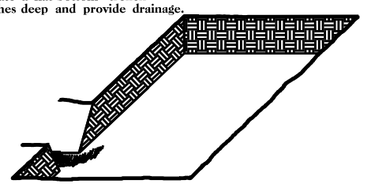

3. Backfill the trench with 2 inches well rotted sawdust. Place a 2 inch layer of well rotted sawdust at a sloping angle at one end of the trench.

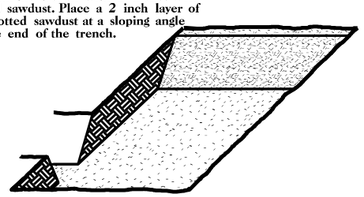

4. Place a single layer of plants against the sloping end so that the root collar is at ground level.

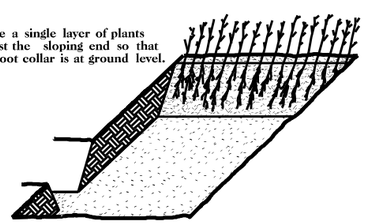

5. Place a 2 inch layer of well rotted sawdust over the roots maintaining a sloping angle.

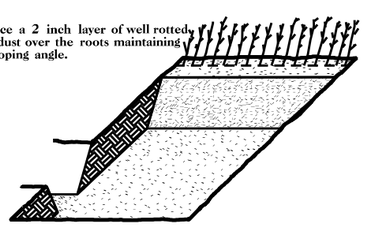

6. Repeat layers of plants and sawdust as necessary and water thoroughly.

DIBBLE PLANTING METHOD
USING THE KBC PLANTING BAR

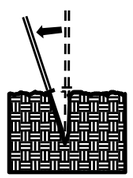

1. Insert planting bar as shown and pull handle toward planter.

2. Remove planting bar and place seedling at correct depth.

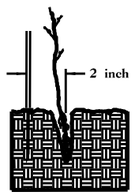

3. Insert planting bar 2 inches toward planter from seedling.

4. Pull handle of bar toward planter, firming soil at bottom.

5. Push handle forward firming soil at top.

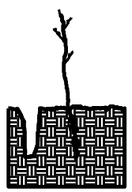

6. Leave compaction hole open. Water thoroughly.

PLANTING NOTES:

PLANTING BAG
During planting, seedlings shall be kept in a moist canvas bag or similar container to prevent the root systems from drying.

KBC PLANTING BAR
Planting bar shall have a blade with a triangular cross section, and shall be 12 inches long, 4 inches wide and 1 inch thick at center.

ROOT PRUNING
All seedlings shall be root pruned, if necessary, so that no roots extend more than 10 inches below the root collar.

REFORESTATION

☐ TREE REFORESTATION SHALL BE PLANTED 6 FT. TO 10 FT. ON CENTER, RANDOM SPACING, AVERAGING 8 FT. ON CENTER, APPROXIMATELY 680 PLANTS PER ACRE.

REFORESTATION

MIXTURE, TYPE, SIZE, AND FURNISH SHALL CONFORM TO THE FOLLOWING:

25%	LIRIODENDRON TULIPIFERA	TULIP POPLAR	12 in – 18 in BR
25%	PLATANUS OCCIDENTALIS	AMERICAN SYCAMORE	12 in – 18 in BR
25%	FRAXINUS PENNSYLVANICA	GREEN ASH	12 in – 18 in BR
25%	BETULA NIGRA	RIVER BIRCH	12 in – 18 in BR

REFORESTATION DETAIL SHEET

N.C.D.O.T. - ROADSIDE ENVIRONMENTAL UNIT

TIP PROJECT: 17BP.4.R.110

T.I.P. NO.	SHEET NO.
17BP.4.R.110	UO–1

NOTE:
ALL UTILITY WORK SHOWN ON THIS SHEET WILL BE DONE BY OTHERS. NO PAYMENT WILL BE MADE TO THE CONTRACTOR FOR UTILITY WORK SHOWN ON THIS SHEET.

STATE OF NORTH CAROLINA
DIVISION OF HIGHWAYS

UTILITIES BY OTHERS PLANS
WAYNE COUNTY

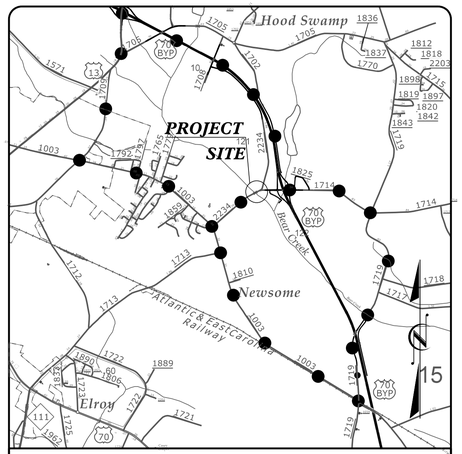

VICINITY MAP

OFF–SITE DETOUR

LOCATION: REPLACEMENT OF BRIDGE NO. 950121 OVER BEAR CREEK ON SR 2234 /SR 1714 (MARK EDWARDS RD./PARKSTOWN RD.).

TYPE OF WORK: POWER, WATER, COMMUNICATION RELOCATION

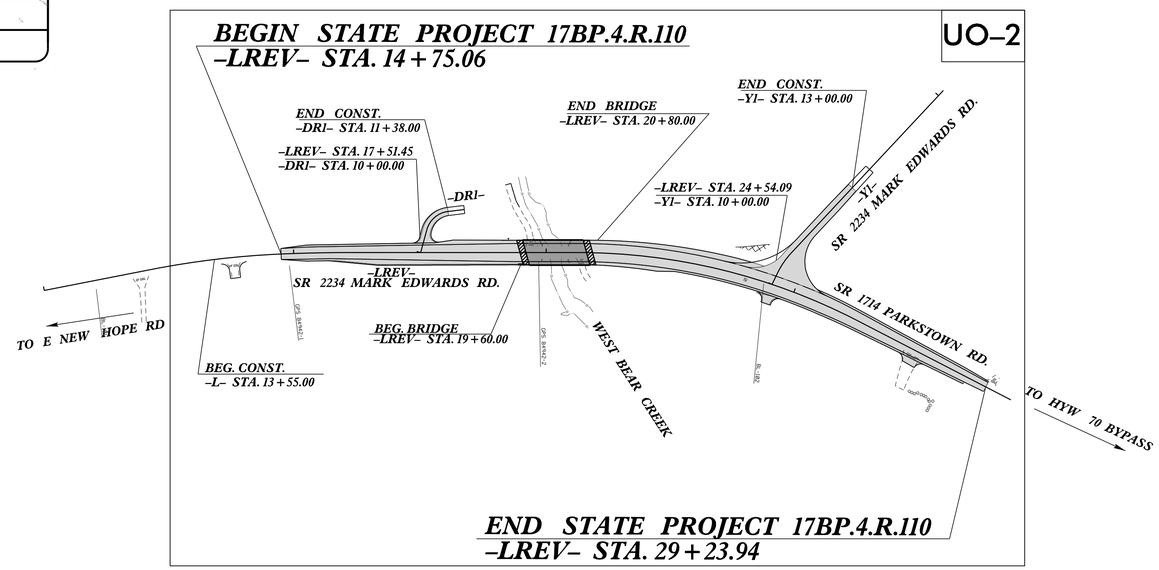

NAD 83/ NSRS 2011

THIS IS A NON CONTROLLED–ACCESS PROJECT.

CLEARING ON THIS PROJECT SHALL BE PERFORMED TO THE LIMITS ESTABLISHED BY METHOD II.

THIS PROJECT IS NOT WITHIN ANY MUNICIPAL BOUNDARIES.

DESIGN EXCEPTION NEEDED FOR BRIDGE WIDTH.

GRAPHIC SCALES

50 25 0 50 100
PLANS

50 25 0 50 100
PROFILE (HORIZONTAL)

10 5 0 10 20
PROFILE (VERTICAL)

INDEX OF SHEETS

SHEET NO.:	DESCRIPTION:
UO–1	UBO TITLE SHEET
UO–2	UBO PLAN SHEETS

UTILITY OWNERS WITH CONFLICTS

(A) POWER – DUKE ENERGY
(B) COMMUNICATION – AT&T
(C) COMMUNICATION – CHARTER /SPECTRUM
(D) WATER – WAYNE WATER DISTRICTS

PREPARED IN THE OFFICE OF:
WETHERILL ENGINEERING
1223 Jones Franklin Rd. Raleigh, N.C. 27606
License No. F-0377
Bus: 919.851.8077 Fax: 919.851.8107

TYRON STALLINGS PROJECT UTILITY COORDINATOR

DIVISION OF HIGHWAYS
UTILITIES UNIT
1555 MAIL SERVICES CENTER
RALEIGH NC 27699–1555
PHONE (919) 707–6690
FAX (919) 250–4151

Ronnie Keeter, PE	UTILITIES REGIONAL ENGINEER
Rachel Evans, PE	UTILITIES ENGINEER
Kim Moore	UTILITIES AREA COORDINATOR
Frank Zdelar	UTILITIES COORDINATOR

09/08/99
$$$$SYSTIME$$$$
$$$$$$$$DGN$$$$
$$$$USERNAME$$$$

PROJECT REFERENCE NO.	SHEET NO.
17BP.R.4.110	U0-2
THIS SHEET CORRESPONDS TO RDY-4	

UTILITIES BY OTHERS

ALL PROPOSED UTILITY WORK SHOWN ON THIS SHEET WILL BE DONE BY OTHERS. NO PAYMENT WILL BE MADE TO THE CONTRACTOR FOR PROPOSED UTILITY WORK SHOWN ON THIS SHEET.

WETHERILL ENGINEERING
1223 Jones Franklin Rd.
Raleigh, N.C. 27606
License No. F-0377
Bus: 919 851 8077
Fax: 919 851 8107
TRANSPORTATION PLANNING/DESIGN - BRIDGE/STRUCTURE DESIGN
CIVIL/SITE DESIGN - GIS/GPS - CONSTRUCTION OBSERVATION

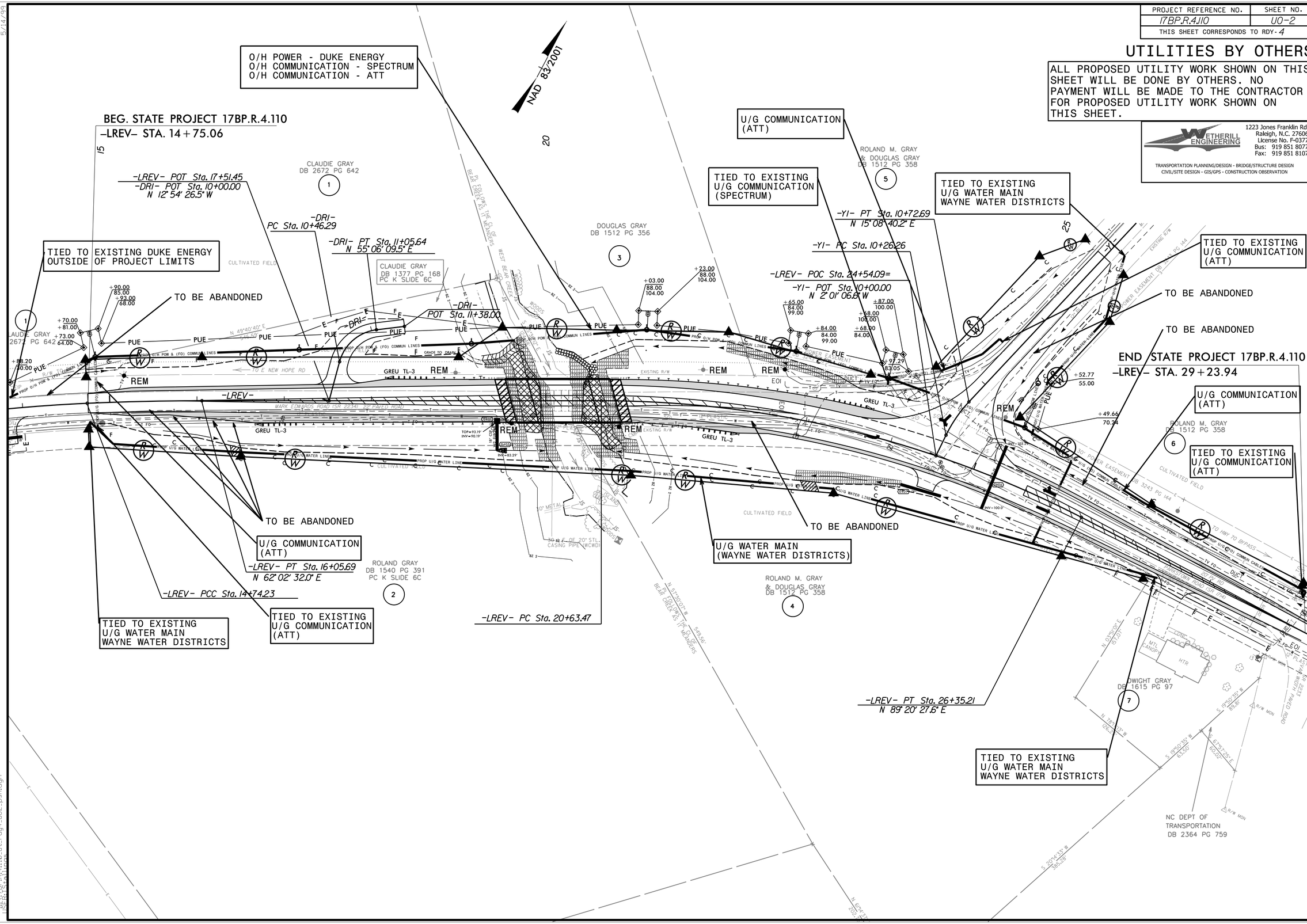

7/31/2019
17BP.R.4.110_ut_rdy4_uo2_psh.dgn
USER:sthomas

5/14/99

17BP.4.R.110
CROSS SECTION INDEX

CROSS-SECTION SUMMARY SHEET	***X-1B***
-L- SR 2234 MARK EDWARDS RD. & SR 1714 PARKSTOWN RD.	***X-1 THRU X-6***
-Y1- SR 2234 MARK EDWARDS RD.	***X-7***
-DR1- PRIVATE DRIVEWAY	***X-8***

5/28/99

8/7/2019
17BP.4.R.110_rdy_LREV_xpl_X-1A.dgn
USER:RBrindell

PROJ. REFERENCE NO.	SHEET NO.
17BP.4.R.110	X-1B

STATE OF NORTH CAROLINA
DIVISION OF HIGHWAYS

NOTE: EMBANKMENT COLUMN DOES NOT INCLUDES BACKFILL FOR UNDERCUT

CROSS-SECTION SUMMARY

Approximate quantities only. Unclassified excavation, borrow excavation, shoulder borrow, fine grading, clearing and grubbing, and removal of existing pavement will be paid for at the lump sum price for "Grading".

Station Lrev	Uncl. Exc. (cu. yd.)	Embt (cu. yd.)
14+75.06	0	0
15+00.00	12	5
15+50.00	20	21
16+00.00	19	54
16+50.00	20	106
17+00.00	30	170
17+50.00	41	161
18+00.00	38	241
18+50.00	34	394
19+00.00	41	438
19+50.00	75	406

Station Lrev	Uncl. Exc. (cu. yd.)	Embt (cu. yd.)
20+80.00	0	0
21+00.00	63	180
21+50.00	118	694
22+00.00	74	860
22+50.00	63	973
23+00.00	50	1025
23+50.00	57	847
24+00.00	63	457
24+50.00	29	178
25+00.00	71	70
25+50.00	186	62
26+00.00	190	64
26+50.00	115	50
27+00.00	72	42
27+50.00	54	30
28+00.00	44	14
28+50.00	39	5
29+00.00	38	1
29+23.94	18	0

Station Y1	Uncl. Exc. (cu. yd.)	Embt (cu. yd.)
10+50.00	0	0
11+00.00	140	190
11+50.00	172	99
12+00.00	159	42
12+50.00	150	10
13+00.00	79	2

Station Dr1	Uncl. Exc. (cu. yd.)	Embt (cu. yd.)
10+25.00	0	0
10+50.00	0	130
10+75.00	0	142
11+00.00	0	55
11+25.00	1	11

PROJ. REFERENCE NO.	SHEET NO.
17BP.4.R.110	X-1

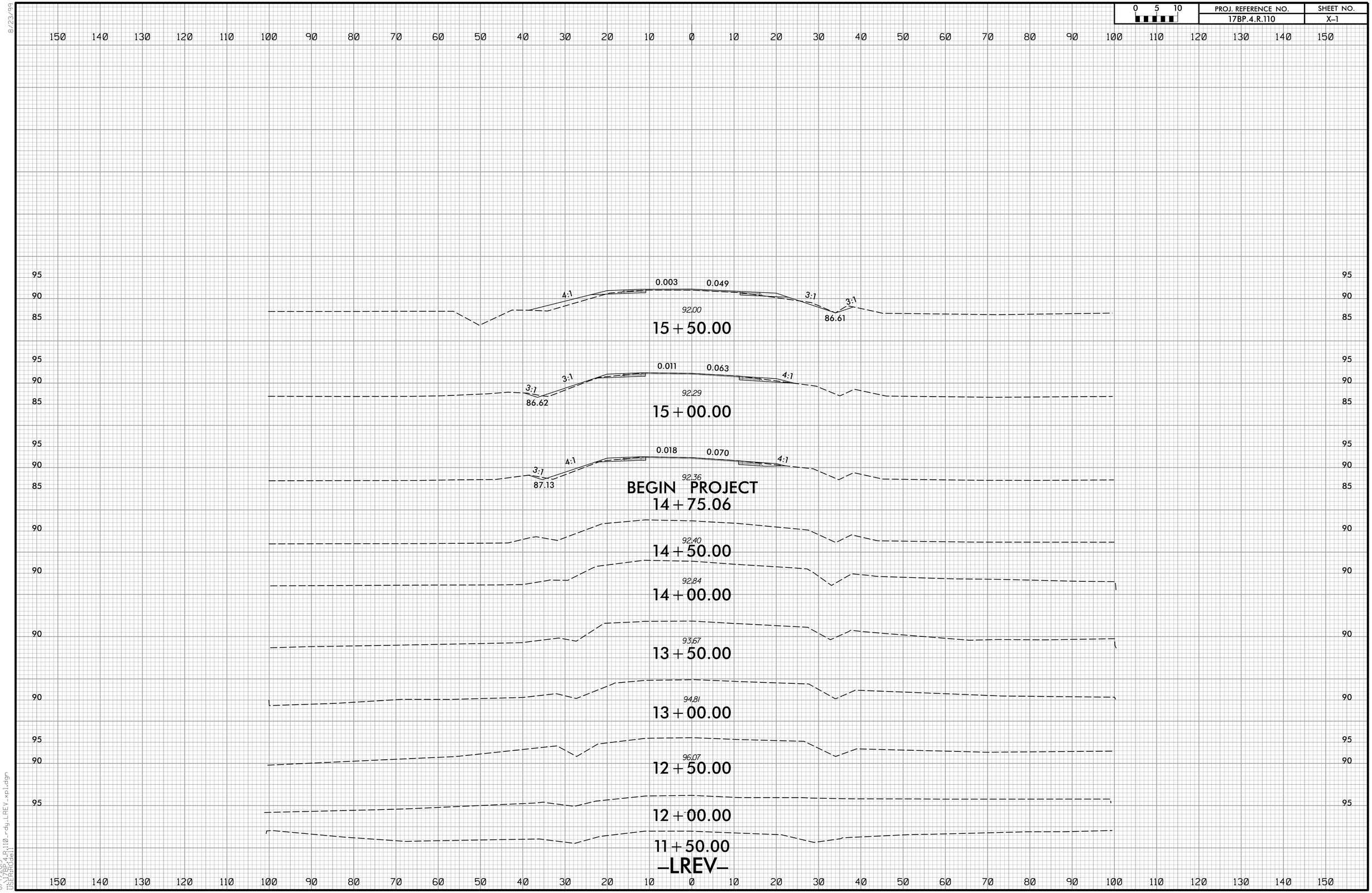

8/23/99

8/7/2019
\\17BP.4.R.110_rdy_LREV_xpl.dgn
USER:RGdell

0 5 10	PROJ. REFERENCE NO.	SHEET NO.
	17BP.4.R.110	X-2

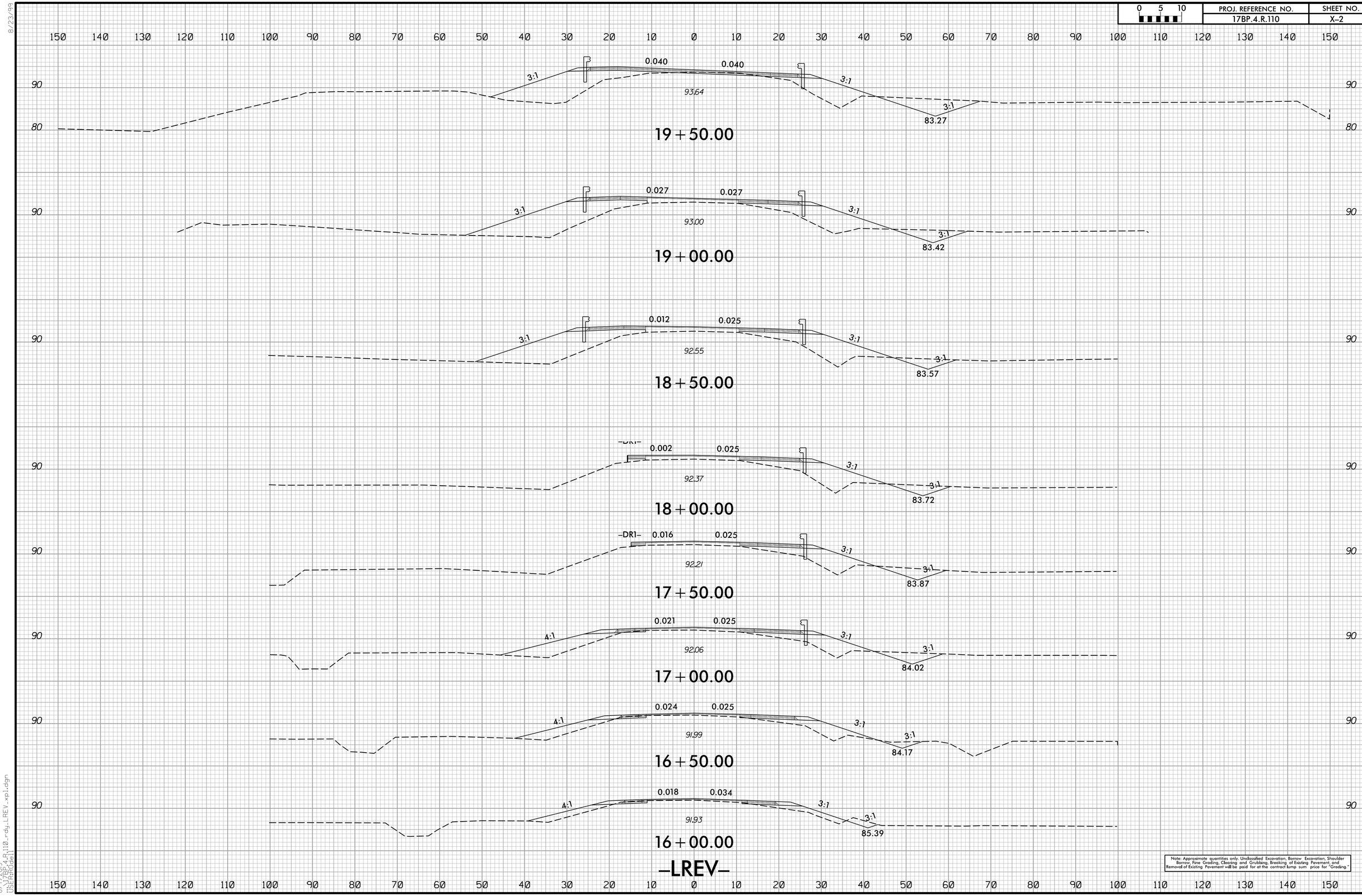

Note: Approximate quantities only. Unclassified Excavation, Borrow Excavation, Shoulder Borrow, Fine Grading, Cleaning and Grubbing, Breaking of Existing Pavement, and Removal of Existing Pavement will be paid for at the contract lump sum price for "Grading."

8/23/99

8/7/2019
17BP.4.R.110_rdy_LREV_xpl.dgn
USERRHodell

0 5 10	PROJ. REFERENCE NO.	SHEET NO.
	17BP.4.R.110	X-3

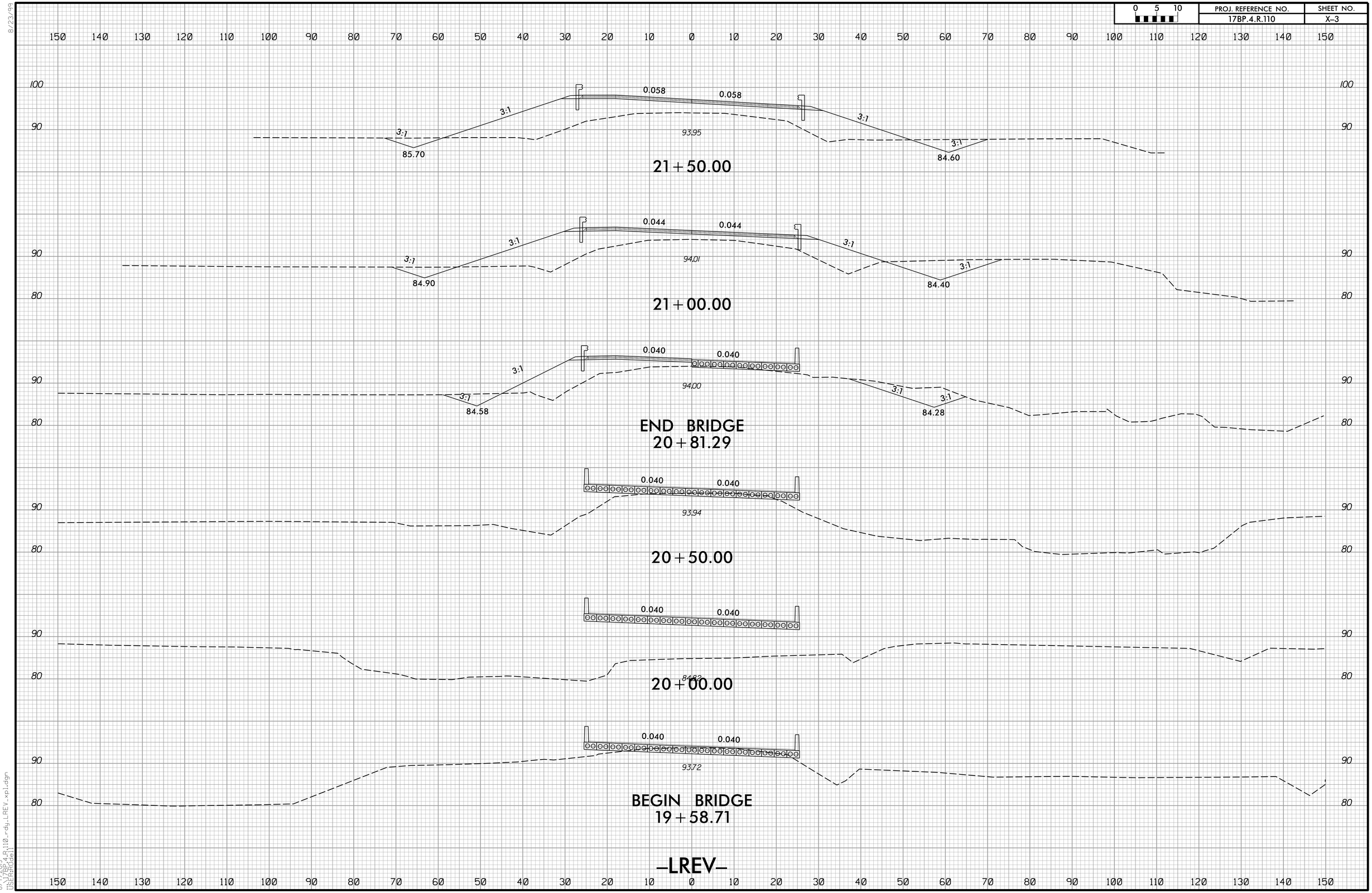

8/23/99

8/7/2019
17BP.4.R.110_rdy_LREV_xpl.dgn
USERRODELL

0 5 10	PROJ. REFERENCE NO.	SHEET NO.
	17BP.4.R.110	X-4

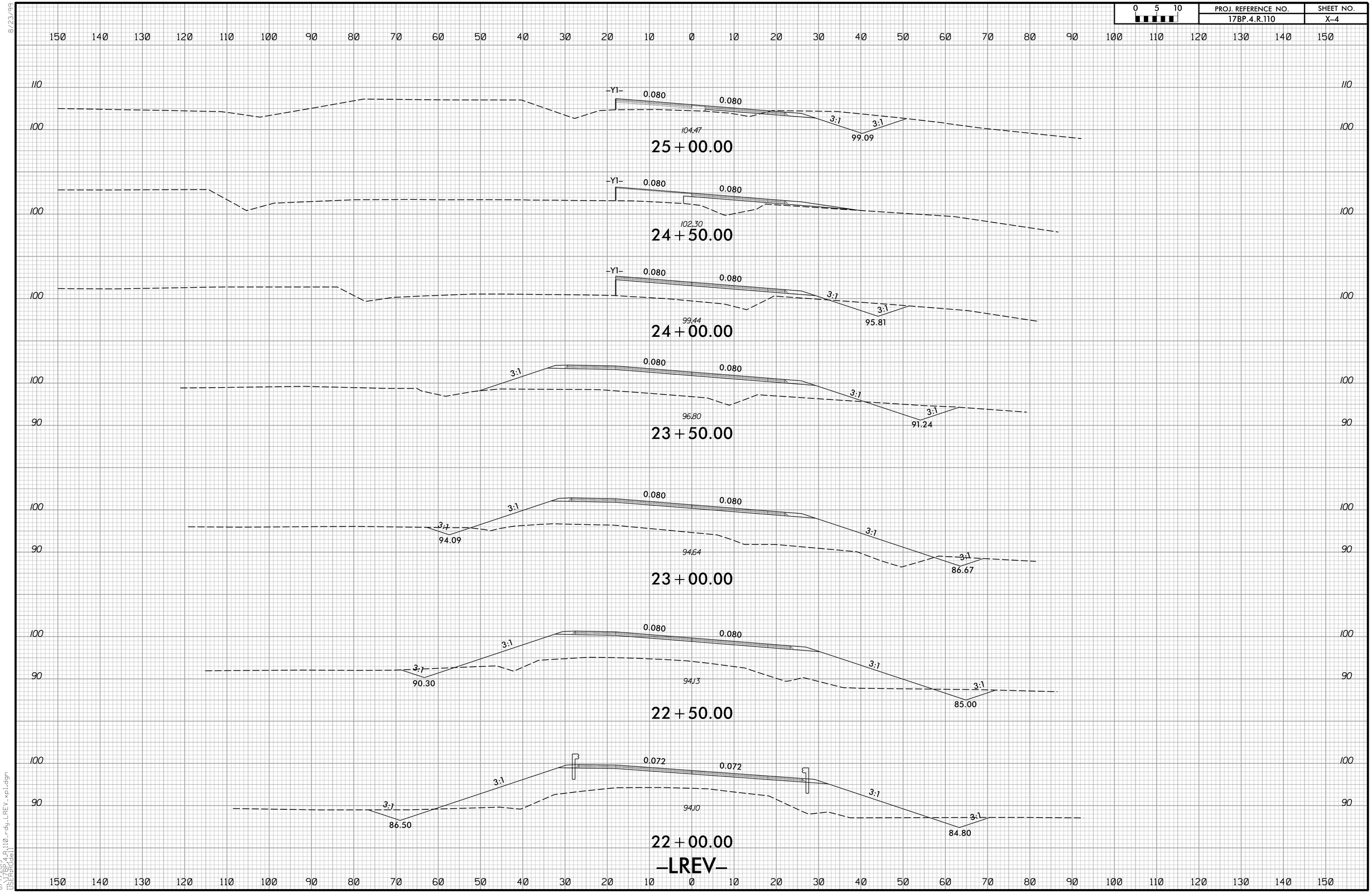

8/23/99

8/7/2019
17BP.4.R.110_rdy_LREV_xpl.dgn
USERRODELL

PROJ. REFERENCE NO.	SHEET NO.
17BP.4.R.110	X-5

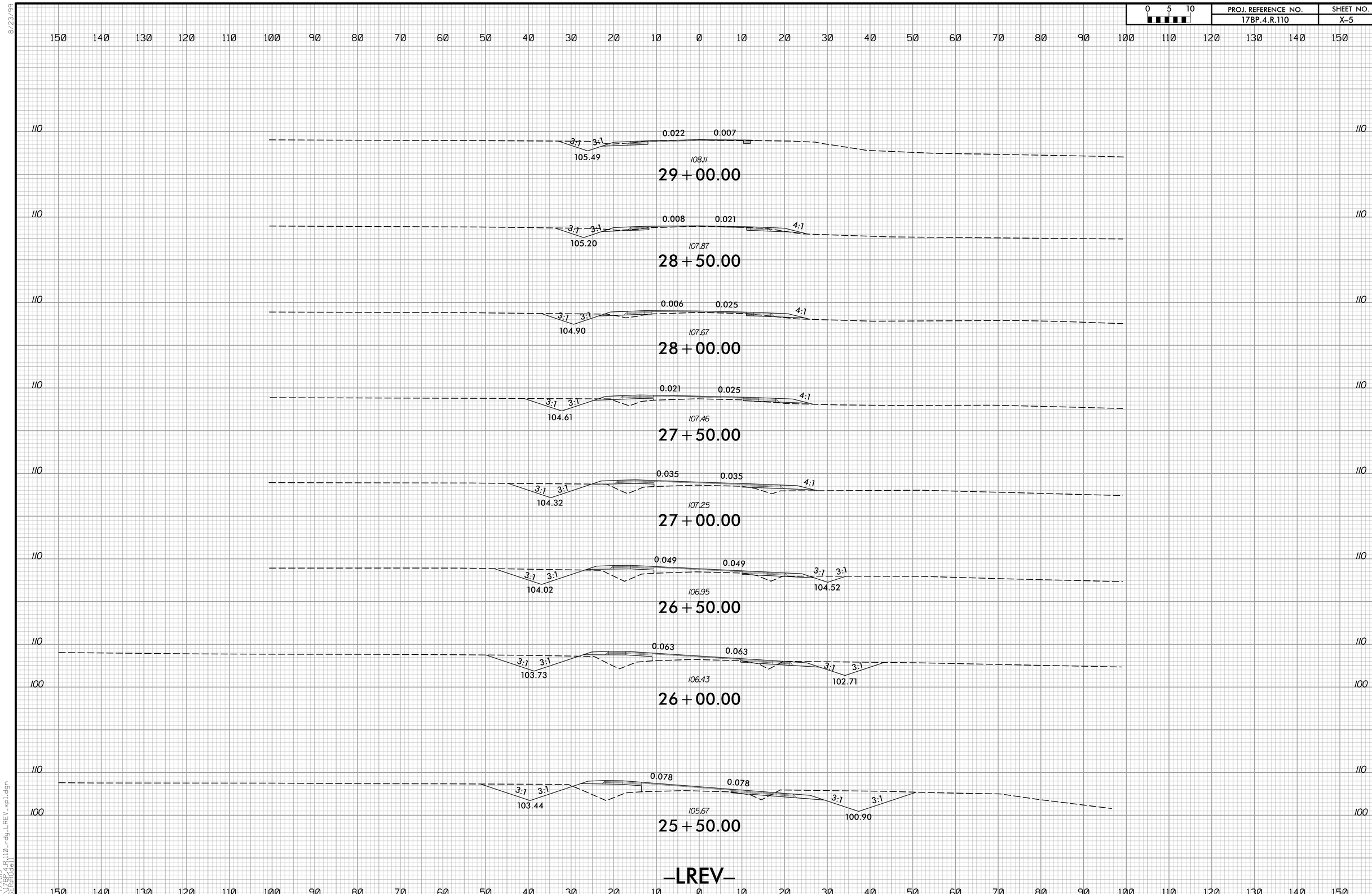

8/23/99

8/7/2019
17BP.4.R.110_rdy_LREV_xpl.dgn
USERROdell

8/23/99

0 5 10	PROJ. REFERENCE NO.	SHEET NO.
	17BP.4.R.110	X-6

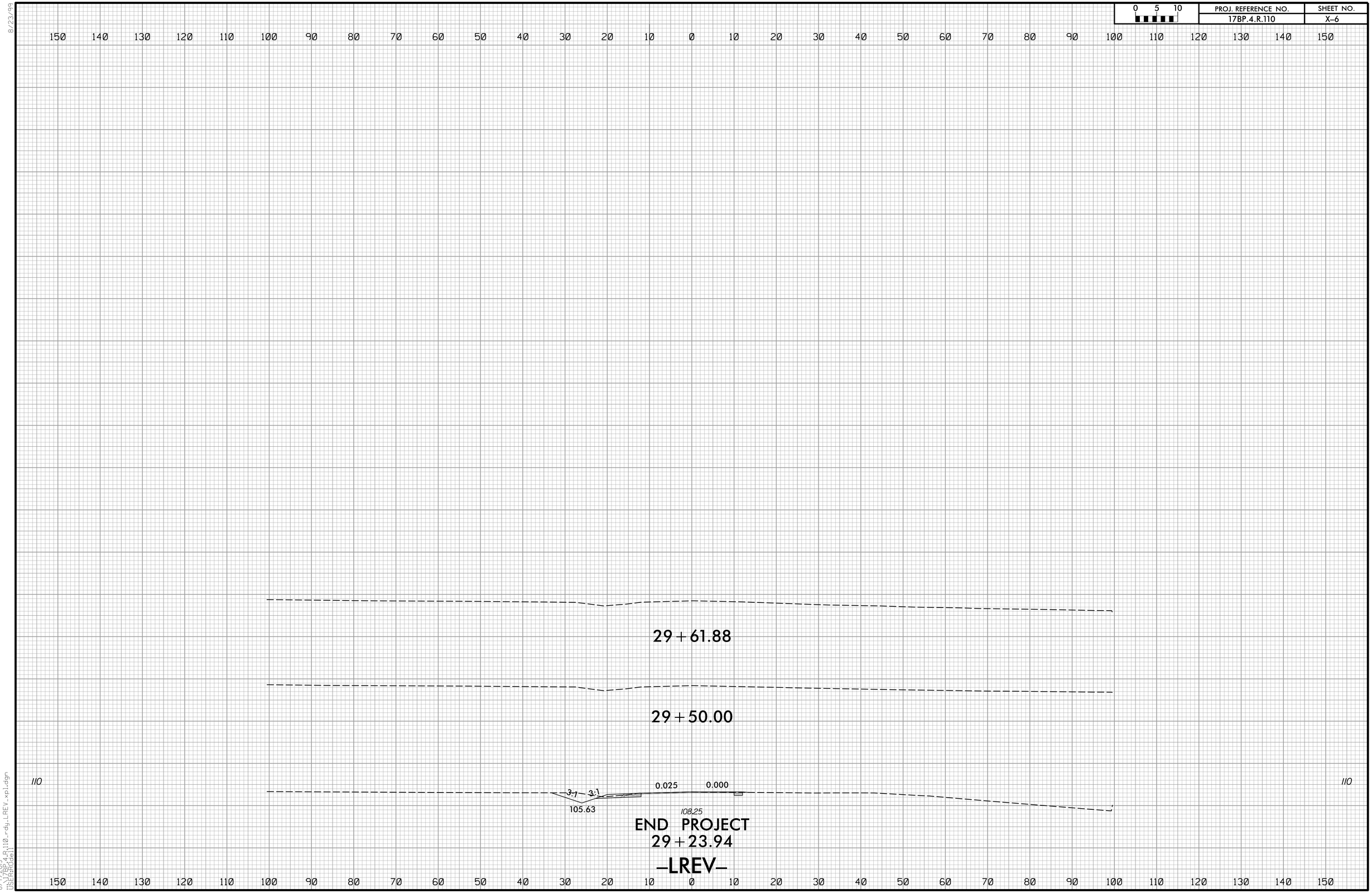

8/7/2019
17BP.4.R.110_rdy_LREV_xpl.dgn
USERRODELL

0 5 10	PROJ. REFERENCE NO.	SHEET NO.
	17BP.4	X-7

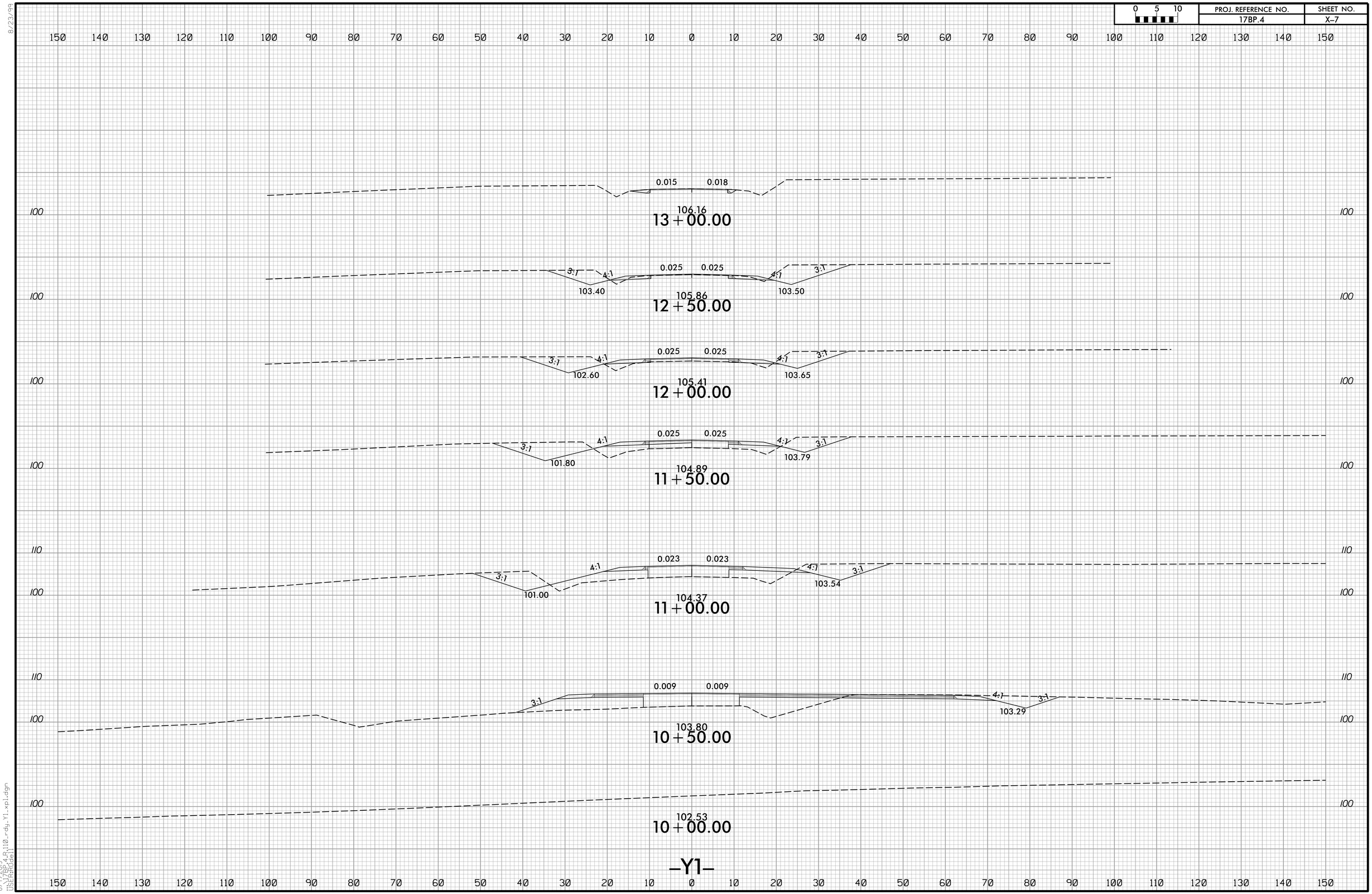

8/23/99

8/7/2009
17BP.4_R_110_rdy_Y1_xpl.dgn
USER:RODell

0 5 10	PROJ. REFERENCE NO.	SHEET NO.
	17BP.4.R.110	X-8

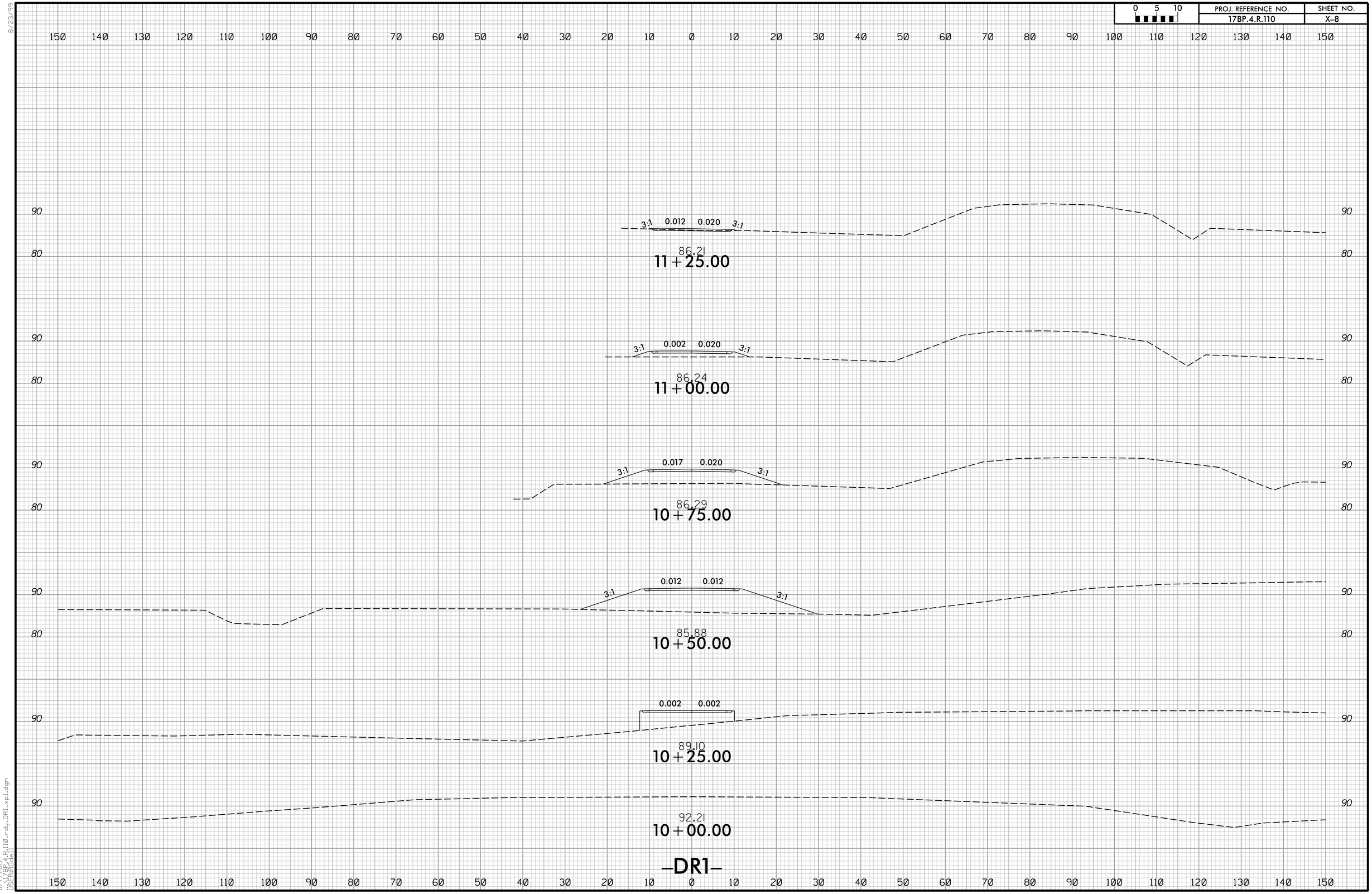

8/23/99

8/7/2019
17BP.4.R.110_rdy_DR1_xpl.dgn
USER:RODell

DocuSign Envelope ID: F49F7727-26E0-4B0F-8253-A3708F92C285

PROJECT: 17BP.4.R.110

CONTRACT: _____

STATE OF NORTH CAROLINA
DIVISION OF HIGHWAYS

STATE	STATE PROJECT REFERENCE NO.	SHEET NO.	TOTAL SHEETS
N.C.	17BP.4.R.110		

STATE PROJ. NO.	F. A. PROJ. NO.	DESCRIPTION
17BP.4.R.110		PE
17BP.4.R.110		ROW/UTIL.
17BP.4.R.110		CONST.

WAYNE COUNTY

LOCATION: REPLACEMENT OF BRIDGE NO. 950121 OVER BEAR CREEK ON SR 2234 /SR 1714 (MARK EDWARDS RD./PARKSTOWN RD.).

TYPE OF WORK: GRADING, DRAINAGE, PAVING, STRUCTURE.

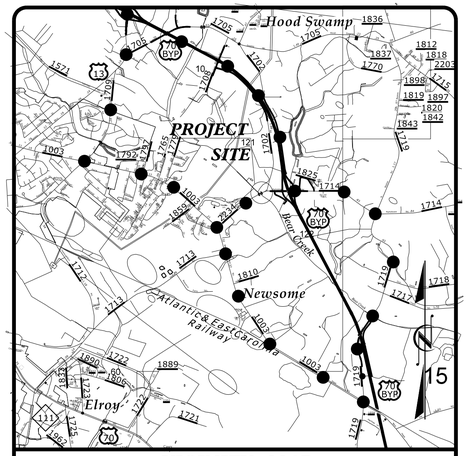

VICINITY MAP

OFF-SITE DETOUR

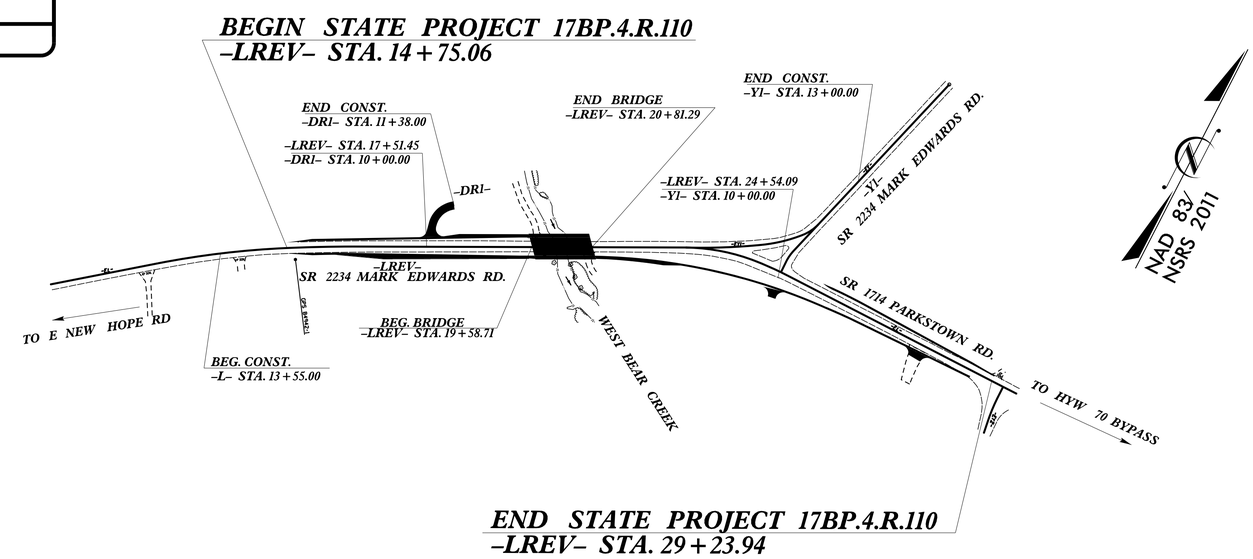

STRUCTURE PLANS

DOCUMENT NOT CONSIDERED FINAL UNLESS ALL SIGNATURES COMPLETED

DESIGN DATA

ADT 2019 = 3,300
ADT 2040 = 5,200
K = 12 %
D = 70 %
T = 7 % *
V = 60 MPH
* TTST = 3% DUAL = 4%
FUNC. CLASS = MINOR ARTERIAL

PROJECT LENGTH

LENGTH ROADWAY TIP PROJECT 17BP.4.R.110 = 0.252 MILES
LENGTH STRUCTURE TIP PROJECT 17BP.4.R.110 = 0.022 MILES

TOTAL LENGTH TIP PROJECT 17BP.4.R.110 = 0.274 MILES

Prepared in the Office of:
WETHERILL ENGINEERING
1223 Jones Franklin Rd. Raleigh, N.C. 27606
License No. F-0377
Bus: 919.851.8077 Fax: 919.851.8107

2018 STANDARD SPECIFICATIONS

LETTING DATE:
OCTOBER 1, 2019

Prepared for:
DIVISION OF HIGHWAYS
DIVISION 4
509 Ward Boulevard
Wilson NC, 27895

EDWARD WETHERILL, P.E.
PROJECT ENGINEER

B.C. HUNT, P.E.
PROJECT DESIGN ENGINEER

NCDOT CONTACT:
RACHEL EVANS, PE
DIVISION PROJECT MANAGER

STATE OF NORTH CAROLINA DEPARTMENT OF TRANSPORTATION

6/24/2019
9:06:42 AM
P:\2019\9103.01_Wayne.12\Structures\DGN\17BP.R.4.110_SMU_TSH.dgn

DocuSign Envelope ID: F49F7727-26E0-4B0F-8253-A3708F92C285

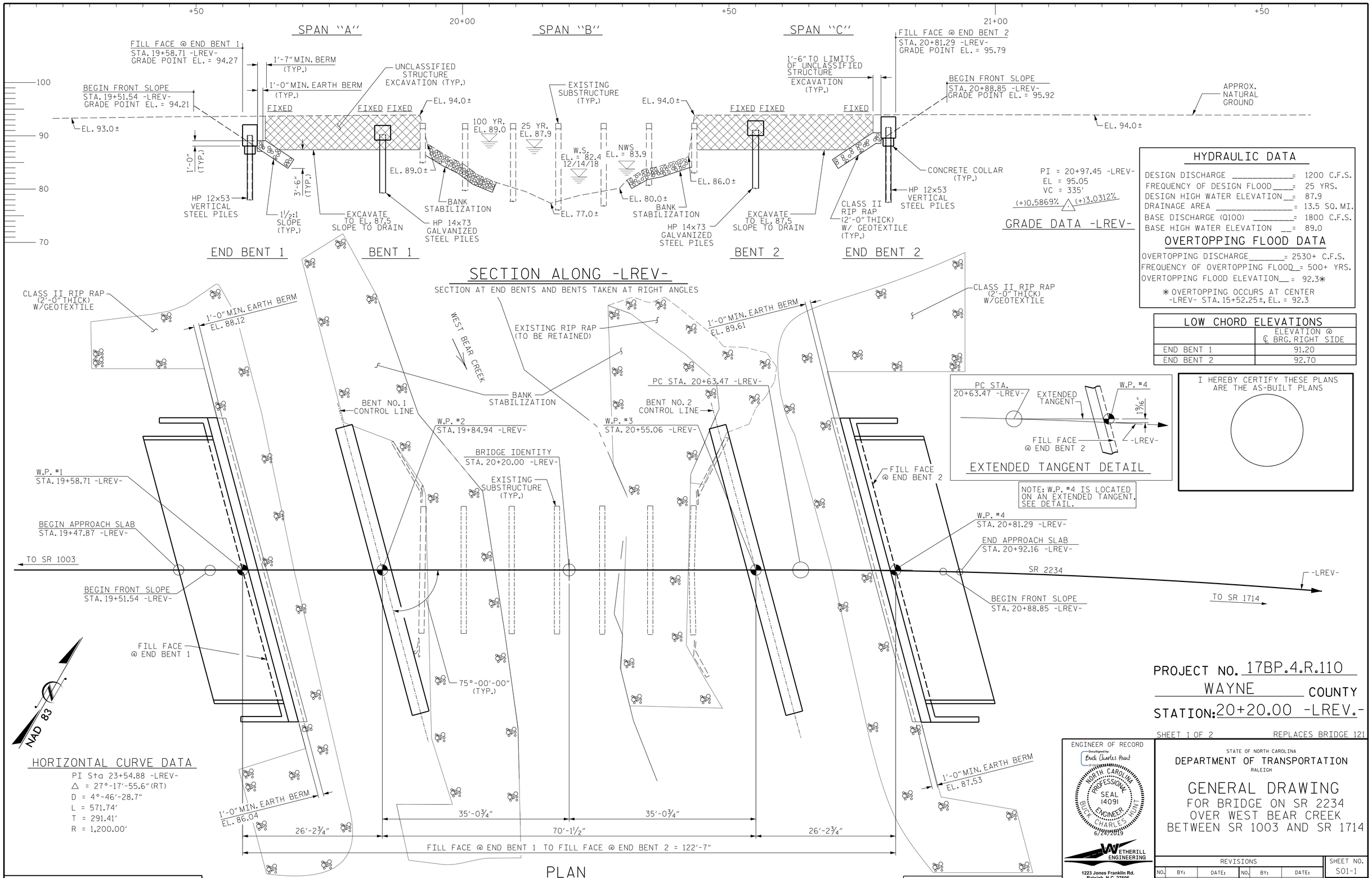

DocuSign Envelope ID: F49F7727-26E0-4B0F-8253-A3708F92C285

BM-2 (BENCH TIE IN 7" OAK) 159.75' RT OF -LREV- STA 20+86.41, EL. 87.33, N 595172 E 2337021

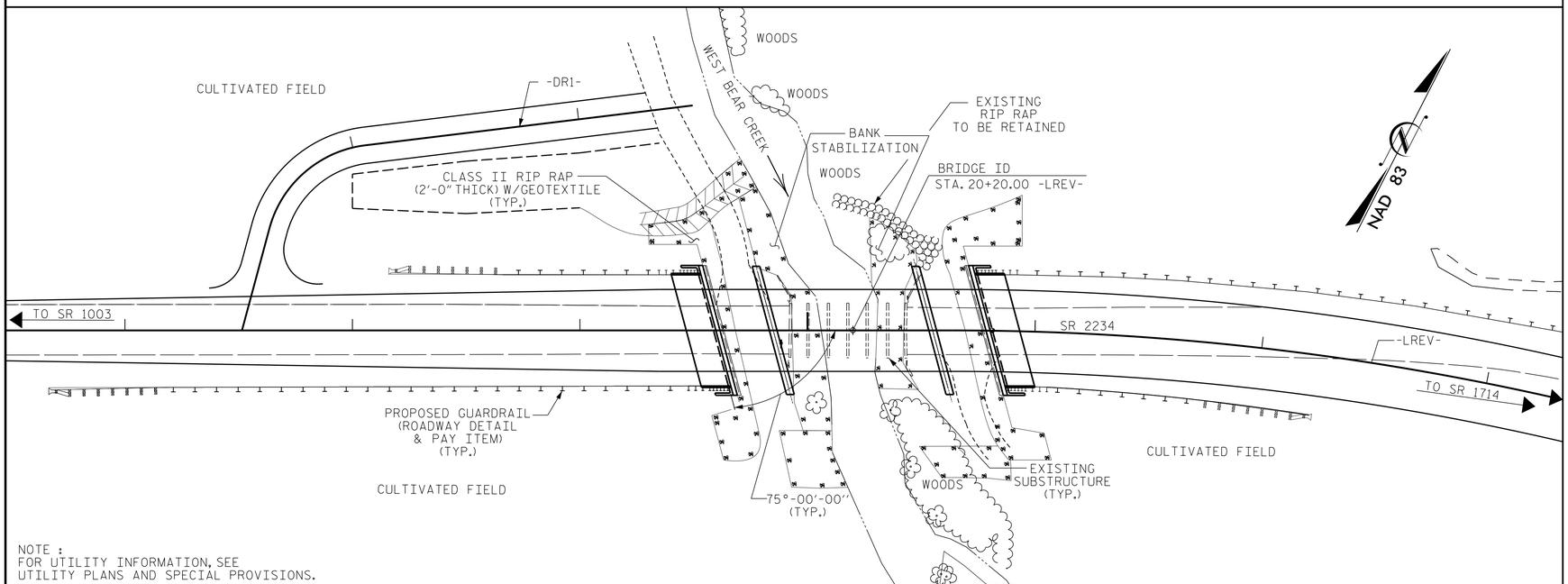

NOTE :
FOR UTILITY INFORMATION, SEE
UTILITY PLANS AND SPECIAL PROVISIONS.

LOCATION SKETCH

FOUNDATION NOTES:

FOR PILES, SEE SECTION 450 OF THE STANDARD SPECIFICATIONS.

PILES AT END BENT NO. 1 AND END BENT NO. 2 ARE DESIGNED FOR A FACTORED RESISTANCE OF 65 TONS PER PILE.

PILES AT BENT NO. 1 AND BENT NO. 2 ARE DESIGNED FOR A FACTORED RESISTANCE OF 135 TONS PER PILE.

DRIVE PILES AT END BENT NO. 1 AND END BENT NO. 2 TO A REQUIRED DRIVING RESISTANCE OF 110 TONS PER PILE.

DRIVE PILES AT BENT NO. 1 AND BENT NO. 2 TO A REQUIRED DRIVING RESISTANCE OF 230 TONS PER PILE. THIS REQUIRED DRIVING RESISTANCE INCLUDES ADDITIONAL RESISTANCE FOR SCOUR.

INSTALL PILES AT BENT 1 AND BENT NO. 2 TO A TIP ELEVATION NO HIGHER THAN 61.0.

THE SCOUR CRITICAL ELEVATION FOR BENT NO. 1 AND BENT NO. 2 IS ELEVATION 80.0 FT. SCOUR CRITICAL ELEVATIONS ARE USED TO MONITOR POSSIBLE SCOUR PROBLEMS DURING THE LIFE OF THE STRUCTURE.

TESTING THE FIRST PRODUCTION PILE WITH THE PDA DURING DRIVING, RESTRIKING OR REDRIVING MAY BE REQUIRED. THE ENGINEER WILL DETERMINE THE NEED FOR PDA TESTING. FOR PDA TESTING, SEE SECTION 450 OF THE STANDARD SPECIFICATIONS.

TOTAL BILL OF MATERIAL

	REMOVAL OF EXISTING STRUCTURE	ASBESTOS ASSESSMENT	PDA TESTING	UNCLASSIFIED STRUCTURE EXCAVATION	CONCRETE WEARING SURFACE	GROOVING BRIDGE FLOORS	CLASS A CONCRETE	BRIDGE APPROACH SLABS	REINFORCING STEEL	PILE DRIVING EQUIPMENT SETUP FOR HP 12x53 STEEL PILES	PILE DRIVING EQUIPMENT SETUP FOR HP 14x73 GALVANIZED STEEL PILES	HP 12 X 53 STEEL PILES		HP 14x73 GALVANIZED STEEL PILES		PILE REDRIVES	VERTICAL CONCRETE BARRIER RAIL	RIP RAP CLASS II (2'-0" THICK)	GEOTEXTILE FOR DRAINAGE	ELASTOMERIC BEARINGS	3'-0" x 1'-9" PRESTRESSED CONCRETE CORED SLABS		3'-0" x 2'-0" PRESTRESSED CONCRETE CORED SLABS	
	LUMP SUM	LUMP SUM	EA.	LUMP SUM	SQ. FT.	SQ. FT.	CU. YDS.	LUMP SUM	LBS.	EA.	EA.	NO.	LIN. FT.	NO.	LIN. FT.	EA.	LIN. FT.	TONS	SQ. YDS.	LUMP SUM	No.	LIN. FT.	No.	LIN. FT.
SUPERSTRUCTURE					5872	6565											240.76			LUMP SUM	34	850.00	17	1190.00
END BENT 1							29.8		3730	7		7	364			4		385	428					
BENT 1							19.4		4015		9			9	639	5								
BENT 2							19.4		4015		9			9	639	5								
END BENT 2							29.8		3730	7		7	364			4		378	420					
TOTAL	LUMP SUM	LUMP SUM	1	LUMP SUM	5872	6565	98.4	LUMP SUM	15490	14	18	14	728	18	1278	18	240.76	763	848	LUMP SUM	34	850.00	17	1190.00

NOTES:

ASSUMED LIVE LOAD = HL-93 OR ALTERNATE LOADING.

THIS BRIDGE HAS BEEN DESIGNED IN ACCORDANCE WITH THE AASHTO LRFD BRIDGE DESIGN SPECIFICATIONS.

THIS BRIDGE IS LOCATED IN SEISMIC ZONE 1.

FOR OTHER DESIGN DATA AND GENERAL NOTES, SEE SHEET SN.

FOR SUBMITTAL OF WORKING DRAWINGS, SEE SPECIAL PROVISIONS.

FOR FALSEWORK AND FORMWORK, SEE SPECIAL PROVISIONS.

FOR CRANE SAFETY, SEE SPECIAL PROVISIONS.

FOR GROUT FOR STRUCTURES, SEE SPECIAL PROVISIONS.

THE MATERIAL SHOWN IN THE CROSS-HATCHED AREA ON SHEET S-1 SHALL BE EXCAVATED FOR A DISTANCE OF 40 FT. LT. AND 35 FT. RIGHT AT END BENT 1, 30 FT. LT. AND 55 FT. RT. AT END BENT 2 EACH SIDE OF CENTERLINE ROADWAY AS DIRECTED BY THE ENGINEER. THIS WORK WILL BE PAID FOR AT THE CONTRACT LUMP SUM PRICE FOR UNCLASSIFIED STRUCTURE EXCAVATION. SEE SECTION 412 OF THE STANDARD SPECIFICATIONS.

THE EXISTING STRUCTURE CONSISTING OF 1 SPAN @ 17'-7", 1 SPAN @ 17'-0", AND 1 SPAN @ 17'-7", WITH A CLEAR ROADWAY WIDTH OF 24'-0" AND HAVING A SUPERSTRUCTURE CONSISTING OF REINFORCED CONCRETE FLOOR ON TIMBER JOISTS AND A SUBSTRUCTURE OF TIMBER CAPS ON TIMBER PILES AND STEEL CRUTCH BENTS SHALL BE REMOVED. THE EXISTING STRUCTURE IS CURRENTLY NOT POSTED FOR LOAD LIMIT.

THE SUBSTRUCTURE OF THE EXISTING BRIDGE INDICATED ON THE PLANS IS FROM THE BEST INFORMATION AVAILABLE. SINCE THIS INFORMATION IS SHOWN FOR THE CONVENIENCE OF THE CONTRACTOR, THE CONTRACTOR SHALL HAVE NO CLAIM WHATSOEVER AGAINST THE DEPARTMENT OF TRANSPORTATION FOR ANY DELAYS OR ADDITIONAL COST INCURRED BASED ON DIFFERENCE BETWEEN THE EXISTING BRIDGE SUBSTRUCTURE SHOWN ON THE PLANS AND THE ACTUAL CONDITIONS AT THE PROJECT SITE.

REMOVAL OF THE EXISTING BRIDGE SHALL BE PERFORMED SO AS NOT TO ALLOW DEBRIS TO FALL INTO THE WATER. THE CONTRACTOR SHALL REMOVE THE BRIDGE AND SUBMIT PLANS FOR DEMOLITION IN ACCORDANCE WITH ARTICLE 402-2 OF THE STANDARD SPECIFICATIONS.

THIS STRUCTURE HAS BEEN DESIGNED IN ACCORDANCE WITH "HEC 18-EVALUATING SCOUR AT BRIDGES".

FOR EROSION CONTROL MEASURES, SEE EROSION CONTROL PLANS.

FOR ASBESTOS ASSESSMENT FOR BRIDGE DEMOLITION AND RENOVATION ACTIVITIES, SEE SPECIAL PROVISIONS.

FOR INTERIOR BENTS, ONLY PARTIAL GALVANIZING OF THE PILES IS REQUIRED. SEE INTERIOR BENT SHEET FOR REQUIRED GALVANIZED LENGTHS. PAYMENT FOR PARTIALLY GALVANIZED PILES WILL BE MADE UNDER THE CONTRACT UNIT PRICE FOR GALVANIZED STEEL PILES.

INASMUCH AS THE PAINT SYSTEM ON THE EXISTING STRUCTURAL STEEL CONTAINS LEAD, THE CONTRACTOR'S ATTENTION IS DIRECTED TO ARTICLE 107-1 OF THE STANDARD SPECIFICATIONS. ANY COSTS RESULTING FROM COMPLIANCE WITH APPLICABLE STATE OR FEDERAL REGULATIONS PERTAINING TO HANDLING OF MATERIALS CONTAINING LEAD BASED PAINT SHALL BE INCLUDED IN THE BID PRICE FOR "REMOVAL OF EXISTING STRUCTURE AT STATION 20+20.00 -LREV-."

PROJECT NO. 17BP.4.R.110
WAYNE COUNTY
STATION: 20+20.00 -LREV.-

SHEET 2 OF 2

ENGINEER OF RECORD
DocuSigned by: Buck Charles Hunt
NORTH CAROLINA PROFESSIONAL SEAL 14091 ENGINEER BUCK CHARLES HUNT
6/24/2019

WETHERILL ENGINEERING
1223 Jones Franklin Rd.
Raleigh, N.C. 27606
Bus: 919 851 8077
Fax: 919 851 8107
LICENSE NO. F-0377

STATE OF NORTH CAROLINA
DEPARTMENT OF TRANSPORTATION
RALEIGH

GENERAL DRAWING
FOR BRIDGE ON SR 2234
OVER WEST BEAR CREEK
BETWEEN SR 1003 AND SR 1714

REVISIONS						SHEET NO.
NO.	BY:	DATE:	NO.	BY:	DATE:	S01-2
1			3			TOTAL SHEETS
2			4			24

DOCUMENT NOT CONSIDERED FINAL UNLESS ALL SIGNATURES COMPLETED

DRAWN BY : J. PENDERGRAFT DATE : 5-19
CHECKED BY : J. DILWORTH DATE : 5-19

P:\2019\19103.01_Wayne_12\Structures\DGN\17BP.R.4.110_SMU_GD.dgn
6/24/2019 9:08:07 AM

DocuSign Envelope ID: F49F7727-26E0-4B0F-8253-A3708F92C285

LOAD AND RESISTANCE FACTOR RATING (LRFR) SUMMARY FOR PRESTRESSED CONCRETE GIRDERS

LEVEL		VEHICLE	WEIGHT (W) (TONS)	CONTROLLING LOAD RATING (#)	MINIMUM RATING FACTORS (RF)	TONS = W × RF	STRENGTH I LIMIT STATE											SERVICE III LIMIT STATE						COMMENT NUMBER
								MOMENT					SHEAR						MOMENT					
							LIVE-LOAD FACTORS (γ_{LL})	DISTRIBUTION FACTORS (DF)	RATING FACTOR	SPAN	GIRDER LOCATION	DISTANCE FROM LEFT END OF SPAN (ft)	DISTRIBUTION FACTORS (DF)	RATING FACTOR	SPAN	GIRDER LOCATION	DISTANCE FROM LEFT END OF SPAN (ft)	LIVE-LOAD FACTORS (γ_{LL})	DISTRIBUTION FACTORS (DF)	RATING FACTOR	SPAN	GIRDER LOCATION	DISTANCE FROM LEFT END OF SPAN (ft)	
DESIGN LOAD RATING		HL-93 (INVENTORY)	N/A	1	2.18	--	1.75	0.280	2.760	A	EL	11.980	0.640	2.180	A	EL	21.980	0.80	0.280	2.470	A	EL	11.980	
		HL-93 (OPERATING)	N/A		2.94	--	1.35	0.280	3.580	A	EL	11.980	0.640	2.940	A	EL	19.480	N/A	--	--	--	--	--	
		HS-20 (INVENTORY)	36.000	2	2.75	99.000	1.75	0.280	4.090	A	EL	11.980	0.640	2.750	A	EL	19.480	0.80	0.280	3.660	A	EL	11.980	
		HS-20 (OPERATING)	36.000		3.60	129.600	1.35	0.280	5.310	A	EL	11.980	0.640	3.600	A	EL	19.480	N/A	--	--	--	--	--	
LEGAL LOAD RATING	SINGLE VEHICLE (SV)	SNSH	13.500		5.32	71.820	1.40	0.280	7.440	A	EL	11.980	0.640	6.130	A	EL	19.480	0.80	0.280	5.320	A	EL	11.980	
		SNGARBS2	20.000		4.98	99.600	1.40	0.280	6.970	A	EL	11.980	0.640	5.100	A	EL	19.480	0.80	0.280	4.980	A	EL	11.980	
		SNAGRIS2	22.000		5.10	112.200	1.40	0.280	7.440	A	EL	11.980	0.640	5.100	A	EL	19.480	0.80	0.280	5.320	A	EL	11.980	
		SNCOTTS3	27.250		2.79	76.028	1.40	0.280	3.900	A	EL	11.980	0.640	3.060	A	EL	19.480	0.80	0.280	2.790	A	EL	11.980	
		SNAGGRS4	34.925		2.77	96.742	1.40	0.280	3.880	A	EL	11.980	0.640	3.050	A	EL	19.480	0.80	0.280	2.770	A	EL	11.980	
		SNS5A	35.550		2.69	95.630	1.40	0.280	3.770	A	EL	11.980	0.640	3.140	A	EL	19.480	0.80	0.280	2.690	A	EL	11.980	
		SNS6A	39.950	3	2.52	100.674	1.40	0.280	3.530	A	EL	11.980	0.640	3.050	A	EL	19.480	0.80	0.280	2.520	A	EL	11.980	
		SNS7B	42.000		2.52	105.840	1.40	0.280	3.530	A	EL	11.980	0.640	3.050	A	EL	19.480	0.80	0.280	2.520	A	EL	11.980	
	TRUCK TRACTOR SEMI-TRAILER (TTST)	TNAGRIT3	33.000		3.56	117.480	1.40	0.280	4.970	A	EL	11.980	0.640	4.040	A	EL	19.480	0.80	0.280	3.560	A	EL	11.980	
		TNT4A	33.075		3.08	101.871	1.40	0.280	4.310	A	EL	11.980	0.640	3.390	A	EL	19.480	0.80	0.280	3.080	A	EL	11.980	
		TNT6A	41.600		2.90	120.640	1.40	0.280	4.050	A	EL	14.480	0.640	3.150	A	EL	19.480	0.80	0.280	2.900	A	EL	11.980	
		TNT7A	42.000		2.99	125.580	1.40	0.280	4.180	A	EL	11.980	0.640	3.240	A	EL	19.480	0.80	0.280	2.990	A	EL	11.980	
		TNT7B	42.000		2.70	113.400	1.40	0.280	3.770	A	EL	11.980	0.640	3.060	A	EL	19.480	0.80	0.280	2.700	A	EL	11.980	
		TNAGRIT4	43.000		2.89	124.270	1.40	0.280	4.050	A	EL	11.980	0.640	3.140	A	EL	19.480	0.80	0.280	2.890	A	EL	11.980	
		TNAGT5A	45.000		2.89	130.050	1.40	0.280	4.050	A	EL	11.980	0.640	3.140	A	EL	19.480	0.80	0.280	2.890	A	EL	11.980	
		TNAGT5B	45.000		2.89	130.050	1.40	0.280	3.920	A	EL	14.480	0.640	2.930	A	EL	19.480	0.80	0.280	2.890	A	EL	14.480	

LOAD FACTORS:

DESIGN LOAD RATING FACTORS	LIMIT STATE	γ_{DC}	γ_{DW}
	STRENGTH I	1.25	1.50
	SERVICE III	1.00	1.00

NOTES:

MINIMUM RATING FACTORS ARE BASED ON THE STRENGTH I AND SERVICE III LIMIT STATES.

ALLOWABLE STRESSES FOR SERVICE III LIMIT STATE ARE AS REQUIRED FOR DESIGN.

COMMENTS:

1. SPANS A & C ARE THE SAME.
2.
3.
4.

(#) CONTROLLING LOAD RATING

(1) DESIGN LOAD RATING (HL-93)

(2) DESIGN LOAD RATING (HS-20)

(3) LEGAL LOAD RATING **

** SEE CHART FOR VEHICLE TYPE

GIRDER LOCATION

I - INTERIOR GIRDER
EL - EXTERIOR LEFT GIRDER
ER - EXTERIOR RIGHT GIRDER

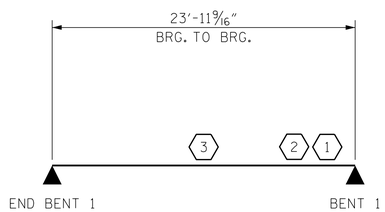

SPAN A

LRFR SUMMARY

SPAN C SIMILAR

PROJECT NO. 17BP.4.R.110

WAYNE COUNTY

STATION: 20+20.00 -LREV.-

ENGINEER OF RECORD

Docusigned by: Buck Charles Hunt

NORTH CAROLINA PROFESSIONAL SEAL 14091 ENGINEER BUCK CHARLES HUNT

6/24/2019

WETHERILL ENGINEERING

1223 Jones Franklin Rd.
Raleigh, N.C. 27606
Bus: 919 851 8077
Fax: 919 851 8107
LICENSE NO. F-0377

STATE OF NORTH CAROLINA
DEPARTMENT OF TRANSPORTATION
RALEIGH

LRFR SUMMARY FOR
25' CORED SLAB UNIT
75° SKEW
SPANS A & C

(NON-INTERSTATE TRAFFIC)

REVISIONS						SHEET NO.
NO.	BY:	DATE:	NO.	BY:	DATE:	S01-3
1			3			TOTAL SHEETS
2			4			24

DOCUMENT NOT CONSIDERED FINAL UNLESS ALL SIGNATURES COMPLETED

DRAWN BY : B.C. HUNT DATE : 5-19
CHECKED BY : T.K. KOCH DATE : 5-19

P:\2019\19103.01_Wayne_121\Structures\DGN\17BP.R.4.110_SMU_LRFR.dgn
6/24/2019 9:09:19 AM

DocuSign Envelope ID: F49F7727-26E0-4B0F-8253-A3708F92C285

LOAD AND RESISTANCE FACTOR RATING (LRFR) SUMMARY FOR PRESTRESSED CONCRETE GIRDERS

LEVEL		VEHICLE	WEIGHT (W) (TONS)	CONTROLLING LOAD RATING (#)	MINIMUM RATING FACTORS (RF)	TONS = W × RF	STRENGTH I LIMIT STATE											SERVICE III LIMIT STATE						COMMENT NUMBER
							LIVE-LOAD FACTORS (γ_{LL})	MOMENT					SHEAR					LIVE-LOAD FACTORS (γ_{LL})	MOMENT					
								DISTRIBUTION FACTORS (DF)	RATING FACTOR	SPAN	GIRDER LOCATION	DISTANCE FROM LEFT END OF SPAN (ft)	DISTRIBUTION FACTORS (DF)	RATING FACTOR	SPAN	GIRDER LOCATION	DISTANCE FROM LEFT END OF SPAN (ft)		DISTRIBUTION FACTORS (DF)	RATING FACTOR	SPAN	GIRDER LOCATION	DISTANCE FROM LEFT END OF SPAN (ft)	
DESIGN LOAD RATING		HL-93 (INVENTORY)	N/A	1	1.07	--	1.75	0.280	1.070	B	EL	34.480	0.610	1.290	B	EL	66.480	0.80	0.280	1.300	B	EL	34.480	
		HL-93 (OPERATING)	N/A		1.39	--	1.35	0.280	1.390	B	EL	34.480	0.610	1.700	B	EL	66.480	N/A	--	--	--	--	--	
		HS-20 (INVENTORY)	36.000	2	1.39	50.040	1.75	0.280	1.390	B	EL	34.480	0.610	1.650	B	EL	66.480	0.80	0.280	1.690	B	EL	34.480	
		HS-20 (OPERATING)	36.000		1.80	64.800	1.35	0.280	1.800	B	EL	34.480	0.610	2.170	B	EL	66.480	N/A	--	--	--	--	--	
LEGAL LOAD RATING	SINGLE VEHICLE (SV)	SNSH	13.500		3.78	51.030	1.40	0.280	3.880	B	EL	34.480	0.610	5.160	B	EL	66.480	0.80	0.280	3.780	B	EL	34.480	
		SNGARBS2	20.000		2.83	56.600	1.40	0.280	2.910	B	EL	34.480	0.610	3.630	B	EL	66.480	0.80	0.280	2.830	B	EL	34.480	
		SNAGRIS2	22.000		2.69	59.180	1.40	0.280	2.770	B	EL	34.480	0.610	3.360	B	EL	66.480	0.80	0.280	2.690	B	EL	34.480	
		SNCOTTS3	27.250		1.88	51.230	1.40	0.280	1.930	B	EL	34.480	0.610	2.520	B	EL	66.480	0.80	0.280	1.880	B	EL	34.480	
		SNAGGRS4	34.925		1.58	55.182	1.40	0.280	1.620	B	EL	34.480	0.610	2.070	B	EL	66.480	0.80	0.280	1.580	B	EL	34.480	
		SNS5A	35.550		1.54	54.747	1.40	0.280	1.590	B	EL	34.480	0.610	2.090	B	EL	66.480	0.80	0.280	1.540	B	EL	34.480	
		SNS6A	39.950		1.42	56.729	1.40	0.280	1.460	B	EL	34.480	0.610	1.900	B	EL	66.480	0.80	0.280	1.420	B	EL	34.480	
		SNS7B	42.000		1.35	56.700	1.40	0.280	1.390	B	EL	34.480	0.610	1.860	B	EL	66.480	0.80	0.280	1.350	B	EL	34.480	
	TRUCK TRACTOR SEMI-TRAILER (TTST)	TNAGRIT3	33.000		1.73	57.090	1.40	0.280	1.780	B	EL	34.480	0.610	2.280	B	EL	66.480	0.80	0.280	1.730	B	EL	34.480	
		TNT4A	33.075		1.74	57.551	1.40	0.280	1.790	B	EL	34.480	0.610	2.220	B	EL	66.480	0.80	0.280	1.740	B	EL	34.480	
		TNT6A	41.600		1.42	59.072	1.40	0.280	1.460	B	EL	34.480	0.610	1.980	B	EL	66.480	0.80	0.280	1.420	B	EL	34.480	
		TNT7A	42.000		1.43	60.060	1.40	0.280	1.470	B	EL	34.480	0.610	1.940	B	EL	66.480	0.80	0.280	1.430	B	EL	34.480	
		TNT7B	42.000		1.49	62.580	1.40	0.280	1.530	B	EL	34.480	0.610	1.810	B	EL	66.480	0.80	0.280	1.490	B	EL	34.480	
		TNAGRIT4	43.000		1.41	60.630	1.40	0.280	1.450	B	EL	34.480	0.610	1.760	B	EL	66.480	0.80	0.280	1.410	B	EL	34.480	
		TNAGT5A	45.000		1.33	59.850	1.40	0.280	1.370	B	EL	34.480	0.610	1.740	B	EL	66.480	0.80	0.280	1.330	B	EL	34.480	
		TNAGT5B	45.000	3	1.31	58.950	1.40	0.280	1.350	B	EL	34.480	0.610	1.660	B	EL	66.480	0.80	0.280	1.310	B	EL	34.480	

LOAD FACTORS:

DESIGN LOAD RATING FACTORS	LIMIT STATE	γ_{DC}	γ_{DW}
	STRENGTH I	1.25	1.50
	SERVICE III	1.00	1.00

NOTES:

MINIMUM RATING FACTORS ARE BASED ON THE STRENGTH I AND SERVICE III LIMIT STATES.

ALLOWABLE STRESSES FOR SERVICE III LIMIT STATE ARE AS REQUIRED FOR DESIGN.

COMMENTS:

1.
2.
3.
4.

(#) CONTROLLING LOAD RATING

(1) DESIGN LOAD RATING (HL-93)

(2) DESIGN LOAD RATING (HS-20)

(3) LEGAL LOAD RATING **

** SEE CHART FOR VEHICLE TYPE

GIRDER LOCATION

I - INTERIOR GIRDER
EL - EXTERIOR LEFT GIRDER
ER - EXTERIOR RIGHT GIRDER

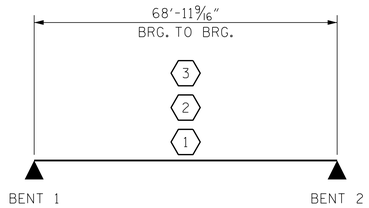

SPAN B

LRFR SUMMARY

PROJECT NO. 17BP.4.R.110
WAYNE COUNTY
STATION: 20+20.00 -LREV.-

ENGINEER OF RECORD
DocuSigned by: Buck Charles Hunt
NORTH CAROLINA PROFESSIONAL SEAL 14091 ENGINEER BUCK CHARLES HUNT
6/24/2019

WETHERILL ENGINEERING
1223 Jones Franklin Rd.
Raleigh, N.C. 27606
Bus: 919 851 8077
Fax: 919 851 8107
LICENSE NO. F-0377

STATE OF NORTH CAROLINA
DEPARTMENT OF TRANSPORTATION
RALEIGH

LRFR SUMMARY FOR 70' CORED SLAB UNIT 75° SKEW SPAN B

(NON-INTERSTATE TRAFFIC)

REVISIONS						SHEET NO.
NO.	BY:	DATE:	NO.	BY:	DATE:	S01-4
1			3			TOTAL SHEETS
2			4			24

DRAWN BY : B.C. HUNT DATE : 5-19
CHECKED BY : T.K. KOCH DATE : 5-19

DOCUMENT NOT CONSIDERED FINAL UNLESS ALL SIGNATURES COMPLETED

P:\2019\19103.01_Wayne_121\Structures\DGN\17BP.R.4.110_SMU_LRFR.dgn
6/24/2019 9:09:36 AM

DocuSign Envelope ID: F49F7727-26E0-4B0F-8253-A3708F92C285

NOTE:
GROOVED CONTRACTION JOINTS ½" IN DEPTH SHALL BE TOOLED IN THE TOP OF WEARING SURFACE AT INTERIOR BENTS WITH CONTINUOUS CONCRETE WEARING SURFACE IN ACCORDANCE WITH ARTICLE 825-10(B) OF THE STANDARD SPECIFICATIONS

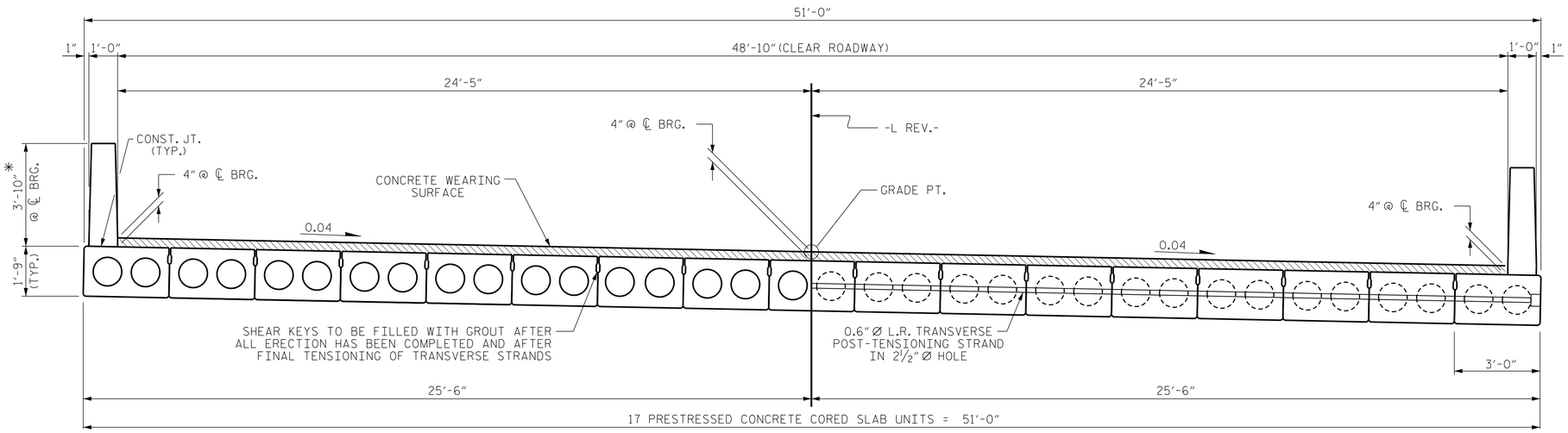

HALF SECTION
THROUGH VOIDS

HALF SECTION
AT INTERMEDIATE DIAPHRAGMS

TYPICAL SECTION

* - THE MAXIMUM BARRIER RAIL HEIGHT AND CONCRETE WEARING SURFACE THICKNESS IS SHOWN. THE HEIGHT OF THE BARRIER RAIL AND CONCRETE WEARING SURFACE THICKNESS VARIES WHILE THE TOP OF THE BARRIER RAIL FOLLOWS THE PROFILE OF THE GUTTERLINE. FOR RAIL HEIGHT DETAILS SEE THE "VERTICAL CONCRETE BARRIER RAIL SECTION" DETAIL.

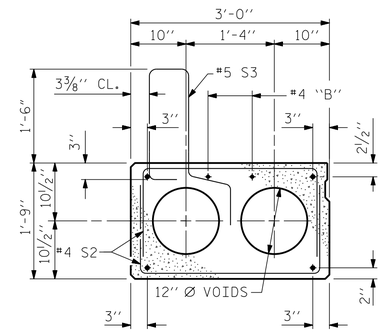

EXT. SLAB SECTION

(FOR PRESTRESSED STRAND LAYOUT, SEE INTERIOR SLAB SECTION.)

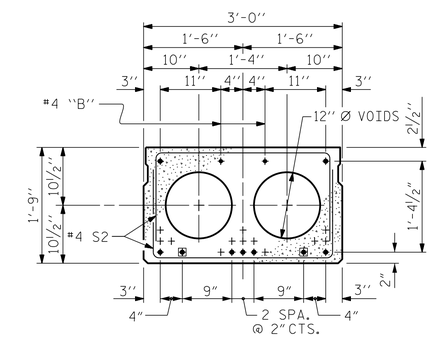

INTERIOR SLAB SECTION (25' UNIT)

(9 STRANDS REQUIRED)

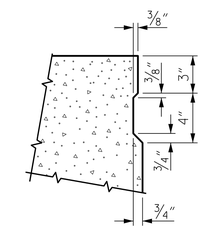

SHEAR KEY DETAIL

NOTE: OMIT SHEAR KEY ON OUTSIDE FACE OF EXTERIOR CORED SLABS.

◉ BOND SHALL BE BROKEN ON THESE STRANDS FOR A DISTANCE OF 2'-0" FROM END OF CORED SLAB UNIT. SEE STANDARD SPECIFICATIONS, ARTICLE 1078-7.

DEBONDING LEGEND

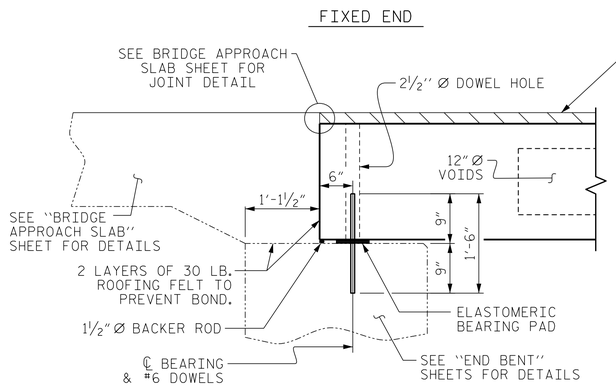

SECTION AT END BENT

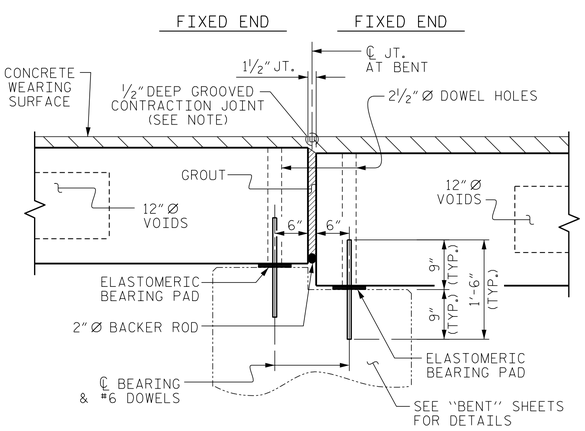

SECTION AT BENTS

(BENT No. 1 SHOWN, BENT No. 2 SIMILAR)

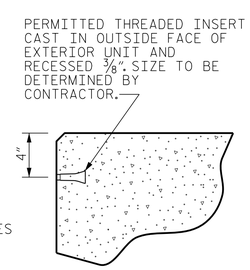

THREADED INSERT DETAIL

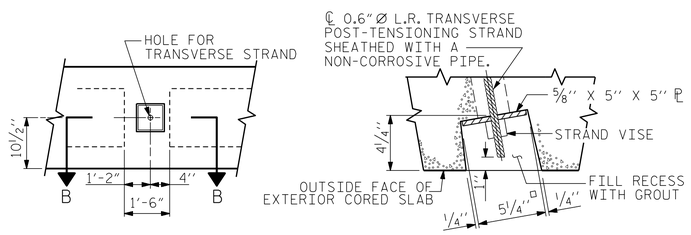

ELEVATION VIEW

SECTION B-B

GROUTED RECESS AT END OF POST-TENSIONED STRAND OF CORED SLABS

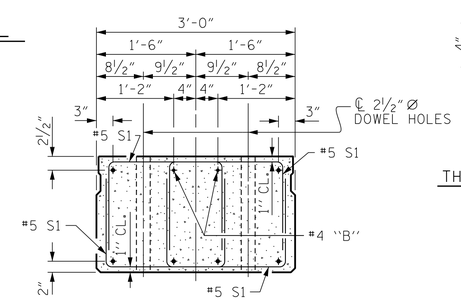

END ELEVATION

SHOWING PLACEMENT OF DOUBLE STIRRUPS AND LOCATION OF DOWEL HOLES. (STRAND LAYOUT NOT SHOWN.) INTERIOR SLAB UNIT SHOWN-EXTERIOR SLAB UNIT SIMILAR EXCEPT SHEAR KEY LOCATION.

PROJECT NO. 17BP.4.R.110
WAYNE COUNTY
STATION: 20+20.00 -LREV.-

SHEET 1 OF 3

DOCUMENT NOT CONSIDERED FINAL UNLESS ALL SIGNATURES COMPLETED

ENGINEER OF RECORD
Developed by Buck Charles Hunt
NORTH CAROLINA PROFESSIONAL SEAL 14091 ENGINEER BUCK CHARLES HUNT
6/24/2019
WETHERILL ENGINEERING
1223 Jones Franklin Rd.
Raleigh, N.C. 27606
Bus: 919 851 8077
Fax: 919 851 8107
LICENSE NO. F-0377

STATE OF NORTH CAROLINA
DEPARTMENT OF TRANSPORTATION
RALEIGH

3'-0" X 1'-9"
PRESTRESSED CONCRETE
CORED SLAB UNIT
75° SKEW
SPANS A & C

REVISIONS								SHEET NO.
NO.	BY:	DATE:	NO.	BY:	DATE:			S01-5
1			3					TOTAL SHEETS
2			4					24

DRAWN BY : B.C. HUNT DATE : 5-19
CHECKED BY : T.K. KOCH DATE : 5-19

P:\2019\19103.01_Wayne_121\Structures\DGN\17BP.R.4.110_SMU_CS.dgn
6/24/2019 9:10:28 AM

DocuSign Envelope ID: F49F7727-26E0-4B0F-8253-A3708F92C285

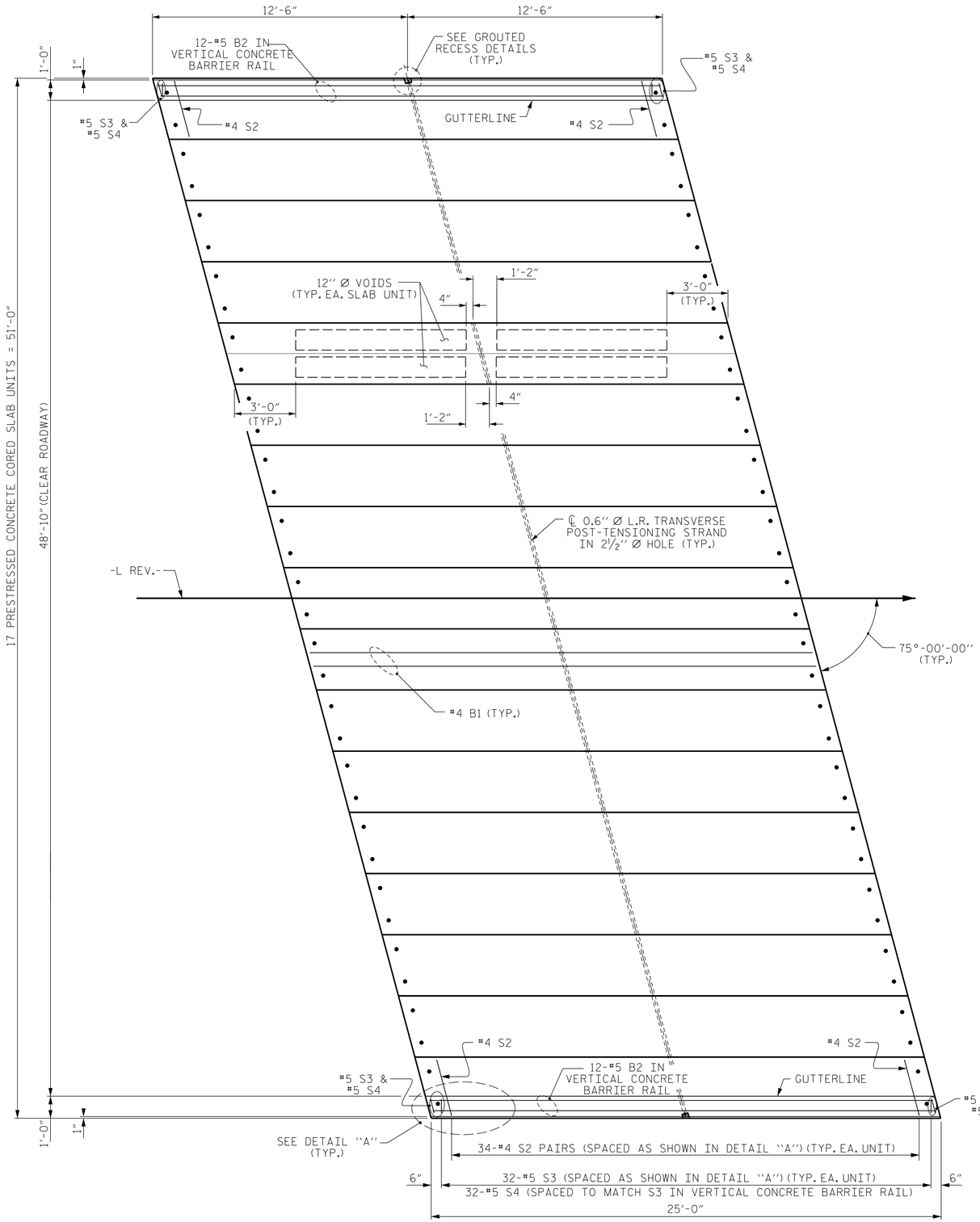

PLAN OF UNIT

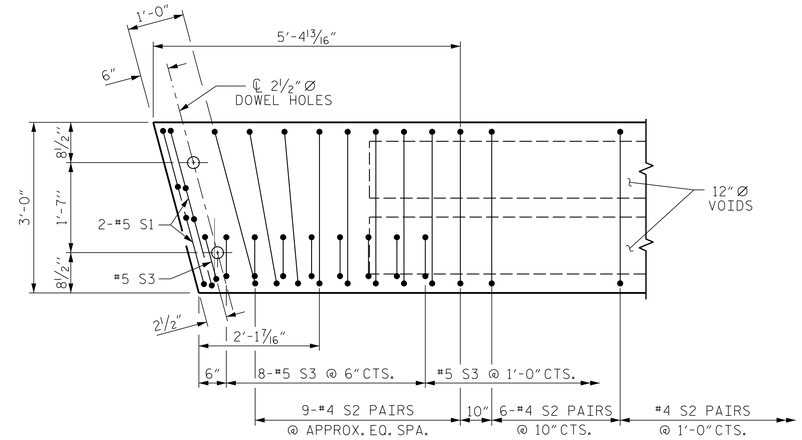

DETAIL "A"

(SIMILAR EACH END OF UNIT)
NOTE: EXTERIOR UNIT SHOWN - INTERIOR UNIT SIMILAR EXCEPT OMIT #5 S3 BARS.

PROJECT NO. 17BP.4.R.110
WAYNE COUNTY
STATION: 20+20.00 -LREV.-

SHEET 2 OF 3

ENGINEER OF RECORD
DocuSigned by: Buck Charles Hunt
NORTH CAROLINA PROFESSIONAL SEAL 14091 ENGINEER BUCK CHARLES HUNT
6/24/2019

WETHERILL ENGINEERING
1223 Jones Franklin Rd.
Raleigh, N.C. 27606
Bus: 919 851 8077
Fax: 919 851 8107
LICENSE NO. F-0377

STATE OF NORTH CAROLINA
DEPARTMENT OF TRANSPORTATION
RALEIGH

PLAN OF 25' UNIT
48'-10" CLEAR ROADWAY
75° SKEW
SPANS A & C

REVISIONS							SHEET NO.
NO.	BY:	DATE:	NO.	BY:	DATE:		S01-6
1			3				TOTAL SHEETS
2			4				24

DRAWN BY : B.C. HUNT DATE : 5-19
CHECKED BY : T.K. KOCH DATE : 5-19

DOCUMENT NOT CONSIDERED FINAL UNLESS ALL SIGNATURES COMPLETED

P:\2019\19103.01_Wayne_12\Structures\DGN\17BP.R.4.110_SMU_CS.dgn
6/24/2019 9:11:55 AM

DocuSign Envelope ID: F49F7727-26E0-4B0F-8253-A3708F92C285

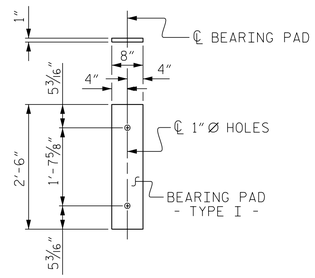

FIXED END
(TYPE I - 68 REQ'D)

ELASTOMERIC BEARING DETAILS

ELASTOMER IN ALL BEARINGS SHALL BE 60 DUROMETER HARDNESS.

BILL OF MATERIAL FOR ONE 25' CORED SLAB UNIT

				EXTERIOR UNIT		INTERIOR UNIT	
BAR	NUMBER	SIZE	TYPE	LENGTH	WEIGHT	LENGTH	WEIGHT
B1	2	#4	STR	24'-7"	33	24'-7"	33
S1	8	#5	3	4'-3"	35	4'-3"	35
S2	68	#4	3	5'-4"	242	5'-4"	242
✳ S3	34	#5	1	5'-10"	207		
REINFORCING STEEL			LBS.		310		310
✳ EPOXY COATED REINFORCING STEEL			LBS.		207		
5000 P.S.I. CONCRETE			CU. YDS.		3.8		3.8
0.6" Ø L.R. STRANDS			No.		9		9

BAR TYPES

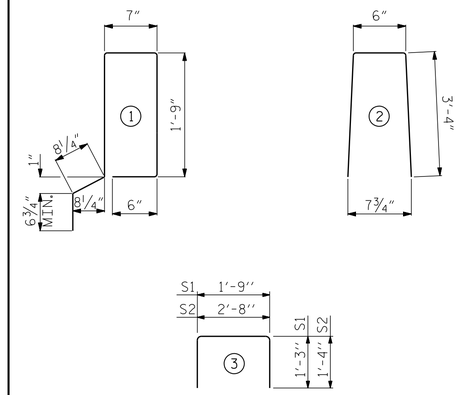

ALL BAR DIMENSIONS ARE OUT TO OUT

NOTES

ALL PRESTRESSING STRANDS SHALL BE 7-WIRE LOW RELAXATION GRADE 270 STRANDS AND SHALL CONFORM TO AASHTO M203 EXCEPT FOR SAMPLING REQUIREMENTS WHICH SHALL BE IN ACCORDANCE WITH THE STANDARD SPECIFICATIONS.

ALL REINFORCING STEEL CAST WITH THE CORED SLAB SECTIONS SHALL BE GRADE 60 AND SHALL BE INCLUDED IN THE UNIT PRICE BID FOR PRESTRESSED CONCRETE CORED SLABS.

RECESSES FOR TRANSVERSE STRANDS SHALL BE GROUTED AFTER THE TENSIONING OF THE STRANDS.

THE 2½" Ø DOWEL HOLES AT FIXED ENDS OF SLAB SECTIONS SHALL BE FILLED WITH NON-SHRINK GROUT.

THE BACKER RODS SHALL CONFORM TO THE REQUIREMENTS OF TYPE M BOND BREAKER. SEE SECTION 1028 OF THE STANDARD SPECIFICATIONS.

WHEN CORED SLABS ARE CAST, AN INTERNAL HOLD-DOWN SYSTEM SHALL BE EMPLOYED TO PREVENT VOIDS FROM RISING OR MOVING SIDEWAYS. AT LEAST SIX WEEKS PRIOR TO CASTING CORED SLABS, THE CONTRACTOR SHALL SUBMIT TO THE ENGINEER FOR REVIEW AND COMMENT, DETAILED DRAWINGS OF THE PROPOSED HOLD-DOWN SYSTEM. IN ADDITION TO STRUCTURAL DETAILS, LOCATION AND SPACING OF THE HOLD-DOWNS SHALL BE INDICATED.

ALL REINFORCING STEEL IN THE VERTICAL CONCRETE BARRIER RAIL SHALL BE EPOXY COATED.

PRESTRESSING STRANDS SHALL BE CUT FLUSH WITH THE CORED SLAB UNIT ENDS.

APPLY EPOXY PROTECTIVE COATING TO CORED SLAB UNIT ENDS.

GROOVED CONTRACTION JOINTS, ½" IN DEPTH, SHALL BE TOOLED IN ALL EXPOSED FACES OF THE BARRIER RAIL AND IN ACCORDANCE WITH ARTICLE 825-10(B) OF THE STANDARD SPECIFICATIONS. A CONTRACTION JOINT SHALL BE LOCATED AT EACH THIRD POINT BETWEEN BARRIER RAIL EXPANSION JOINTS. ONLY ONE CONTRACTION JOINT IS REQUIRED AT MIDPOINT OF BARRIER RAIL SEGMENTS LESS THAN 20 FEET IN LENGTH AND NO CONTRACTION JOINTS ARE REQUIRED FOR THOSE SEGMENTS LESS THAN 10 FEET IN LENGTH.

FLAME CUTTING OF THE TRANSVERSE POST-TENSIONING STRAND IS NOT ALLOWED.

THE TRANSFER OF LOAD FROM THE ANCHORAGES TO THE CORED SLAB UNIT SHALL BE DONE WHEN THE CONCRETE HAS REACHED A COMPRESSIVE STRENGTH OF NOT LESS THAN THE REQUIRED STRENGTH SHOWN IN THE "CONCRETE RELEASE STRENGTH" TABLE.

FOR GROUT FOR STRUCTURES, SEE SPECIAL PROVISIONS.

THE PERMITTED THREADED INSERTS ARE DETAILED AS AN OPTION FOR THE CONTRACTOR TO ATTACH FALSEWORK AND FORMWORK DURING CONSTRUCTION.

THE PERMITTED THREADED INSERTS IN THE EXTERIOR UNITS SHALL BE SIZED BY THE CONTRACTOR, SPACED AT 4'-0" CENTERS AND GALVANIZED IN ACCORDANCE WITH SECTION 1076 OF THE STANDARD SPECIFICATIONS. STAINLESS STEEL THREADED INSERTS MAY BE USED AS AN ALTERNATE.

THE PERMITTED THREADED INSERTS SHALL BE GROUTED BY THE CONTRACTOR IMMEDIATELY FOLLOWING REMOVAL OF THE FALSEWORK.

THE COST OF THE PERMITTED THREADED INSERTS SHALL BE INCLUDED IN THE PRICE BID FOR THE PRECAST UNITS.

DEAD LOAD DEFLECTION AND CAMBER

	3'-0" x 1'-9"
25' CORED SLAB UNIT	0.6" Ø L.R. STRAND
CAMBER (SLAB ALONE IN PLACE)	¼" ↑
DEFLECTION DUE TO SUPERIMPOSED DEAD LOAD✳✳	0" ↓
FINAL CAMBER	¼" ↑

✳✳ DEFLECTION DUE TO DEAD LOAD OF RAILS AND FUTURE WEARING SURFACE IS NOT INCLUDED.

BILL OF MATERIAL FOR VERTICAL CONCRETE BARRIER RAIL

BAR	BARS PER PAIR OF EXTERIOR UNITS	TOTAL NO.	SIZE	TYPE	LENGTH	WEIGHT
	25' UNIT					
✳ B2	24	48	#5	STR	24'-6"	1227
✳ S4	68	136	#5	2	7'-2"	1017
✳ EPOXY COATED REINFORCING STEEL				LBS.		2244
CLASS AA CONCRETE				CU.YDS.		13.0
TOTAL VERTICAL CONCRETE BARRIER RAIL				LIN. FT.		100.50

CORED SLABS REQUIRED

	NUMBER	LENGTH	TOTAL LENGTH
25' UNIT			
EXTERIOR C.S.	4	25'-0"	100'-0"
INTERIOR C.S.	30	25'-0"	750'-0"
TOTAL	34		850'-0"

GUTTERLINE CONCRETE WEARING SURFACE THICKNESS & RAIL HEIGHT

	CONCRETE WEARING SURFACE THICKNESS	RAIL HEIGHT
	@ MID-SPAN	@ MID-SPAN
25' UNITS	3¾"	3'-9¾"

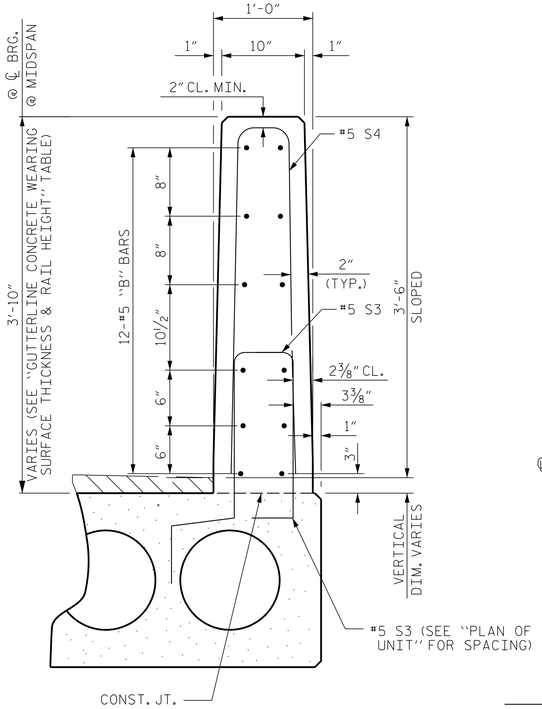

VERTICAL CONCRETE BARRIER RAIL SECTION

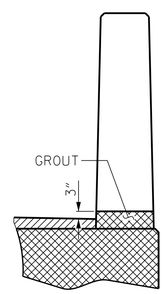

SECTION T-T
AT OPEN JOINT AT BENT
(THIS IS TO BE USED WHERE FOAM JOINT IS NOT USED)

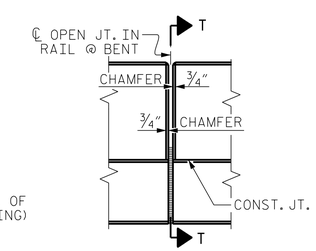

ELEVATION AT JOINTS

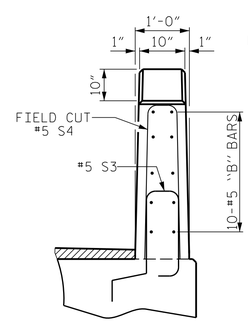

END VIEW

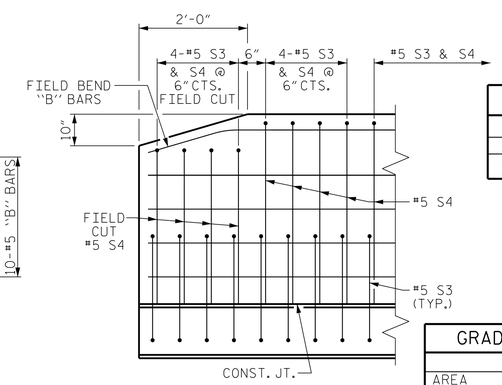

SIDE VIEW

END OF RAIL DETAILS

CONCRETE RELEASE STRENGTH

UNIT	PSI
25' UNITS	4000

GRADE 270 STRANDS

	0.6" Ø L.R.
AREA (SQUARE INCHES)	0.217
ULTIMATE STRENGTH (LBS. PER STRAND)	58,600
APPLIED PRESTRESS (LBS. PER STRAND)	43,950

DOCUMENT NOT CONSIDERED FINAL UNLESS ALL SIGNATURES COMPLETED

ENGINEER OF RECORD
Docusigned by: Buck Charles Hunt
NORTH CAROLINA PROFESSIONAL SEAL 14091 ENGINEER BUCK CHARLES HUNT
6/24/2019

WETHERILL ENGINEERING
1223 Jones Franklin Rd.
Raleigh, N.C. 27606
Bus: 919 851 8077
Fax: 919 851 8107
LICENSE NO. F-0377

PROJECT NO. 17BP.4.R.110
WAYNE COUNTY
STATION: 20+20.00 -LREV.-

SHEET 3 OF 3

STATE OF NORTH CAROLINA
DEPARTMENT OF TRANSPORTATION
RALEIGH

3'-0" X 1'-9" PRESTRESSED CONCRETE CORED SLAB UNIT SPANS A & C

REVISIONS							SHEET NO.
NO.	BY:	DATE:	NO.	BY:	DATE:		S01-7
1			3				TOTAL SHEETS
2			4				24

DRAWN BY : B.C. HUNT DATE : 5-19
CHECKED BY : T.K. KOCH DATE : 5-19

P:\2019\19103.01_Wayne_12\Structures\DGN\17BP.R.4.110_SMU_CS.dgn
6/24/2019 9:12:37 AM

DocuSign Envelope ID: F49F7727-26E0-4B0F-8253-A3708F92C285

NOTE:
GROOVED CONTRACTION JOINTS 1/2" IN DEPTH SHALL BE TOOLED IN THE TOP OF WEARING SURFACE AT INTERIOR BENTS WITH CONTINUOUS CONCRETE WEARING SURFACE IN ACCORDANCE WITH ARTICLE 825-10(B) OF THE STANDARD SPECIFICATIONS

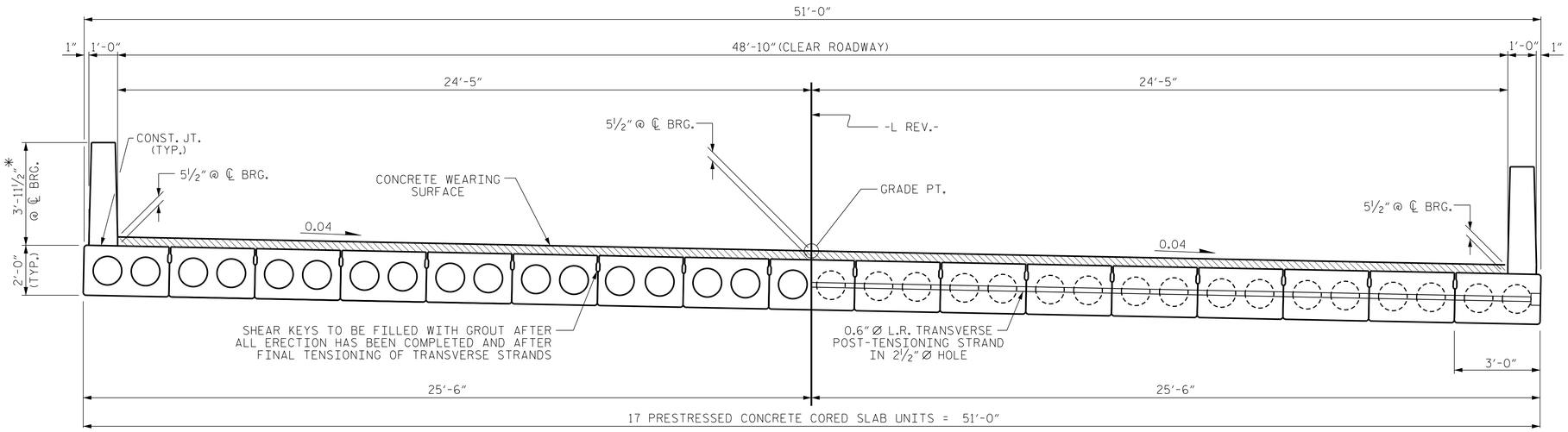

HALF SECTION
THROUGH VOIDS

HALF SECTION
AT INTERMEDIATE DIAPHRAGMS

TYPICAL SECTION

*- THE MAXIMUM BARRIER RAIL HEIGHT AND CONCRETE WEARING SURFACE THICKNESS IS SHOWN. THE HEIGHT OF THE BARRIER RAIL AND CONCRETE WEARING SURFACE THICKNESS VARIES WHILE THE TOP OF THE BARRIER RAIL FOLLOWS THE PROFILE OF THE GUTTERLINE. FOR RAIL HEIGHT DETAILS SEE THE "VERTICAL CONCRETE BARRIER RAIL SECTION" DETAIL.

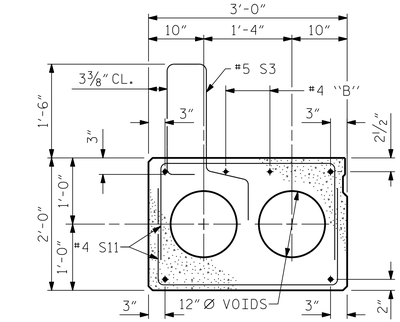

EXTERIOR SLAB SECTION

(FOR PRESTRESSED STRAND LAYOUT, SEE INTERIOR SLAB SECTION.)

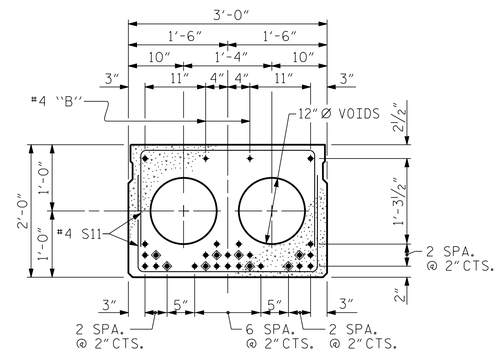

INTERIOR SLAB SECTION (70' UNIT)

(28 STRANDS REQUIRED)

0.6" Ø LOW RELAXATION STRAND LAYOUT

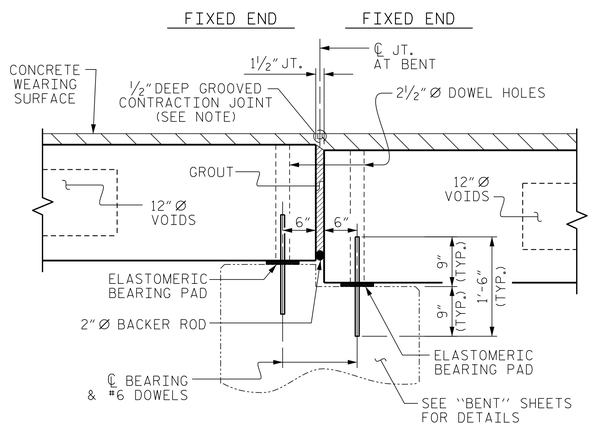

SECTION AT BENTS

(BENT No. 1 SHOWN, BENT No. 2 SIMILAR)

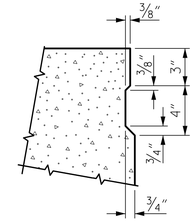

SHEAR KEY DETAIL

NOTE: OMIT SHEAR KEY ON OUTSIDE FACE OF EXTERIOR CORED SLABS.

◈ BOND SHALL BE BROKEN ON THESE STRANDS FOR A DISTANCE OF 12'-0" FROM END OF CORED SLAB UNIT. SEE STANDARD SPECIFICATIONS, ARTICLE 1078-7.

DEBONDING LEGEND

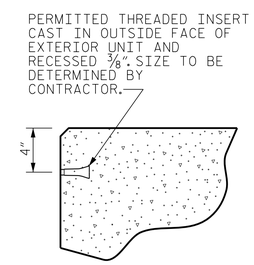

THREADED INSERT DETAIL

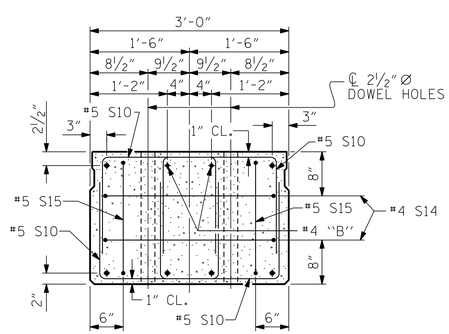

END ELEVATION

SHOWING PLACEMENT OF DOUBLE STIRRUPS AND LOCATION OF DOWEL HOLES. (STRAND LAYOUT NOT SHOWN.) INTERIOR SLAB UNIT SHOWN-EXTERIOR SLAB UNIT SIMILAR EXCEPT SHEAR KEY LOCATION.

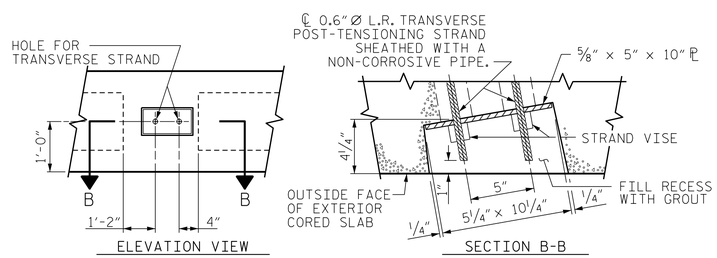

GROUTED RECESS AT END OF POST-TENSIONED STRAND-CORED SLABS

PROJECT NO. 17BP.4.R.110
WAYNE COUNTY
STATION: 20+20.00 -LREV.-

SHEET 1 OF 3

ENGINEER OF RECORD
Docusigned by: Buck Charles Hunt
NORTH CAROLINA PROFESSIONAL SEAL 14091 ENGINEER BUCK CHARLES HUNT
6/24/2019

WETHERILL ENGINEERING
1223 Jones Franklin Rd.
Raleigh, N.C. 27606
Bus: 919 851 8077
Fax: 919 851 8107
LICENSE NO. F-0377

STATE OF NORTH CAROLINA
DEPARTMENT OF TRANSPORTATION
RALEIGH

3'-0" X 2'-0"
PRESTRESSED CONCRETE
CORED SLAB UNIT
75° SKEW
SPAN B

REVISIONS						SHEET NO.
NO.	BY:	DATE:	NO.	BY:	DATE:	S01-8
1			3			TOTAL SHEETS
2			4			24

DOCUMENT NOT CONSIDERED FINAL UNLESS ALL SIGNATURES COMPLETED

DRAWN BY : B.C. HUNT DATE : 5-19
CHECKED BY : T.K. KOCH DATE : 5-19

P:\2019\19103.01_Wayne_121\Structures\DGN\17BP.R.110_SMU_CS.dgn
6/24/2019 9:13:01 AM

DocuSign Envelope ID: F49F7727-26E0-4B0F-8253-A3708F92C285

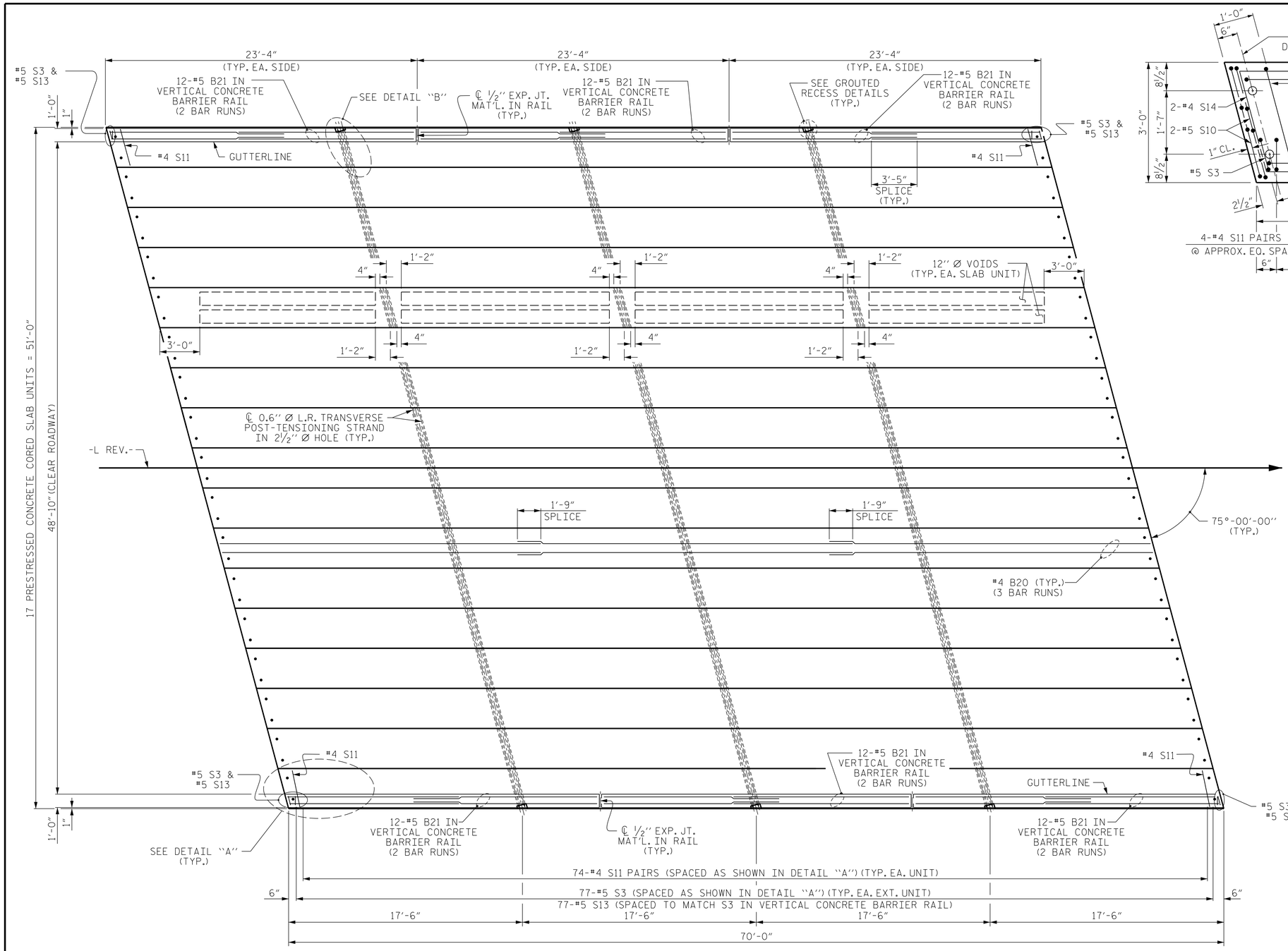

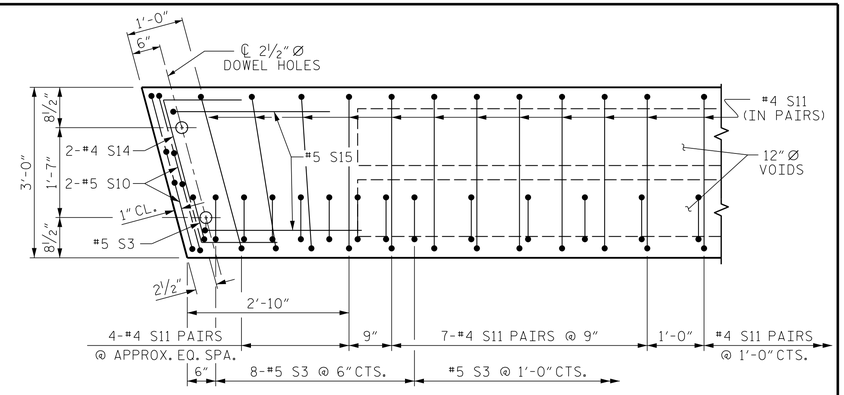

DETAIL "A"

(SIMILAR EACH END OF UNIT)
NOTE: EXTERIOR UNIT SHOWN - INTERIOR UNIT SIMILAR EXCEPT OMIT #5 S3 BARS.

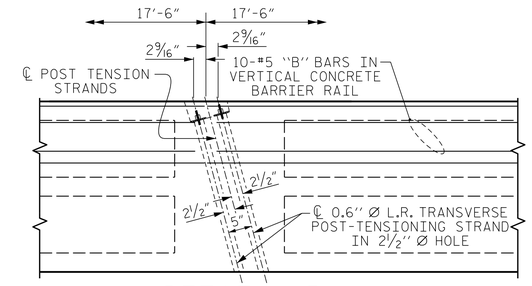

DETAIL "B"

#4 S11 BARS MAY BE SHIFTED AS NECESSARY TO MAINTAIN 1" CLEAR TO GROUTED RECESS AND 2 1/2" Ø TRANSVERSE POST-TENSIONING STRAND HOLES

PROJECT NO. 17BP.4.R.110
WAYNE COUNTY
STATION: 20+20.00 -LREV.-

SHEET 2 OF 3

ENGINEER OF RECORD
DocuSigned by: Buck Charles Hunt
NORTH CAROLINA PROFESSIONAL SEAL 14091 ENGINEER BUCK CHARLES HUNT
6/24/2019

WETHERILL ENGINEERING
1223 Jones Franklin Rd.
Raleigh, N.C. 27606
Bus: 919 851 8077
Fax: 919 851 8107
LICENSE NO. F-0377

STATE OF NORTH CAROLINA
DEPARTMENT OF TRANSPORTATION
RALEIGH

PLAN OF 70' UNIT 48'-10" CLEAR ROADWAY 75° SKEW SPAN B

REVISIONS							SHEET NO.
NO.	BY:	DATE:	NO.	BY:	DATE:		S01-9
1			3				TOTAL SHEETS
2			4				24

DRAWN BY : B.C. HUNT DATE : 5-19
CHECKED BY : T.K. KOCH DATE : 5-19

DOCUMENT NOT CONSIDERED FINAL UNLESS ALL SIGNATURES COMPLETED

P:\2019\19103.01_Wayne_12\Structures\DGN\17BP.R.4.110_SW0_CS.dgn
6/24/2019 9:14:15 AM

DocuSign Envelope ID: F49F7727-26E0-4B0F-8253-A3708F92C285

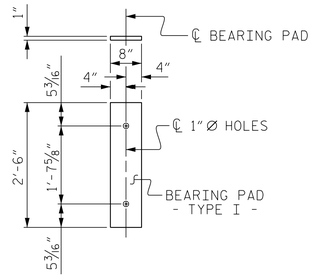

FIXED END
(TYPE I - 34 REQ'D)

ELASTOMERIC BEARING DETAILS

ELASTOMER IN ALL BEARINGS SHALL BE 60 DUROMETER HARDNESS.

BILL OF MATERIAL FOR ONE 70' CORED SLAB UNIT

BAR	NUMBER	SIZE	TYPE	EXTERIOR UNIT LENGTH	EXTERIOR UNIT WEIGHT	INTERIOR UNIT LENGTH	INTERIOR UNIT WEIGHT
B20	6	#4	STR	24'-6"	98	24'-6"	98
✳S3	79	#5	1	5'-10"	481		
S10	8	#5	3	4'-10"	40	4'-10"	40
S11	148	#4	3	5'-10"	577	5'-10"	577
S14	4	#4	4	5'-8"	15	5'-8"	15
S15	4	#5	3	7'-1"	30	7'-1"	30
REINFORCING STEEL			LBS.		760		760
✳EPOXY COATED REINFORCING STEEL			LBS.		481		
7000 P.S.I. CONCRETE			CU. YDS.		12.0		12.0
0.6" Ø L.R. STRANDS			No.		28		28

CORED SLABS REQUIRED

	NUMBER	LENGTH	TOTAL LENGTH
70' UNIT			
EXTERIOR C.S.	2	70'-0"	140'-0"
INTERIOR C.S.	15	70'-0"	1050'-0"
TOTAL	17		1190'-0"

BAR TYPES

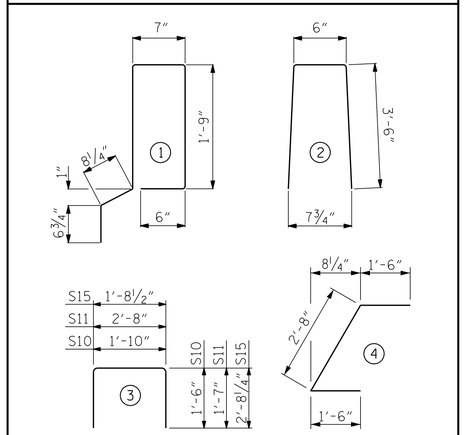

ALL BAR DIMENSIONS ARE OUT TO OUT

NOTES

ALL PRESTRESSING STRANDS SHALL BE 7-WIRE LOW RELAXATION GRADE 270 STRANDS AND SHALL CONFORM TO AASHTO M203 EXCEPT FOR SAMPLING REQUIREMENTS WHICH SHALL BE IN ACCORDANCE WITH THE STANDARD SPECIFICATIONS.

ALL REINFORCING STEEL CAST WITH THE CORED SLAB SECTIONS SHALL BE GRADE 60 AND SHALL BE INCLUDED IN THE UNIT PRICE BID FOR PRESTRESSED CONCRETE CORED SLABS.

RECESSES FOR TRANSVERSE STRANDS SHALL BE GROUTED AFTER THE TENSIONING OF THE STRANDS.

THE 2 1/2" Ø DOWEL HOLES AT FIXED ENDS OF SLAB SECTIONS SHALL BE FILLED WITH NON-SHRINK GROUT.

THE BACKER RODS SHALL CONFORM TO THE REQUIREMENTS OF TYPE M BOND BREAKER. SEE SECTION 1028 OF THE STANDARD SPECIFICATIONS.

WHEN CORED SLABS ARE CAST, AN INTERNAL HOLD-DOWN SYSTEM SHALL BE EMPLOYED TO PREVENT VOIDS FROM RISING OR MOVING SIDEWAYS. AT LEAST SIX WEEKS PRIOR TO CASTING CORED SLABS, THE CONTRACTOR SHALL SUBMIT TO THE ENGINEER FOR REVIEW AND COMMENT, DETAILED DRAWINGS OF THE PROPOSED HOLD-DOWN SYSTEM. IN ADDITION TO STRUCTURAL DETAILS, LOCATION AND SPACING OF THE HOLD-DOWNS SHALL BE INDICATED.

THE TRANSFER OF LOAD FROM THE ANCHORAGES TO THE CORED SLAB UNIT SHALL BE DONE WHEN THE CONCRETE HAS REACHED A COMPRESSIVE STRENGTH OF NOT LESS THAN THE REQUIRED STRENGTH SHOWN IN THE "CONCRETE RELEASE STRENGTH" TABLE.

ALL REINFORCING STEEL IN VERTICAL CONCRETE BARRIER RAILS SHALL BE EPOXY COATED.

PRESTRESSING STRANDS SHALL BE CUT FLUSH WITH THE CORED SLAB UNIT ENDS.

APPLY EPOXY PROTECTIVE COATING TO CORED SLAB UNIT ENDS.

GROOVED CONTRACTION JOINTS, 1/2" IN DEPTH, SHALL BE TOOLED IN ALL EXPOSED FACES OF THE BARRIER RAIL AND IN ACCORDANCE WITH ARTICLE 825-10(B) OF THE STANDARD SPECIFICATIONS. A CONTRACTION JOINT SHALL BE LOCATED AT EACH THIRD POINT BETWEEN BARRIER RAIL EXPANSION JOINTS. ONLY ONE CONTRACTION JOINT IS REQUIRED AT MIDPOINT OF BARRIER RAIL SEGMENTS LESS THAN 20 FEET IN LENGTH AND NO CONTRACTION JOINTS ARE REQUIRED FOR THOSE SEGMENTS LESS THAN 10 FEET IN LENGTH.

FLAME CUTTING OF THE TRANSVERSE POST-TENSIONING STRAND IS NOT ALLOWED.

MAINTAIN A SYMMETRIC TENSION FORCE BETWEEN EACH PAIR OF TRANSVERSE POST TENSIONING STRANDS IN THE DIAPHRAGM.

THE #4 S11 STIRRUPS MAY BE SHIFTED AS NECESSARY TO MAINTAIN 1" CLEAR TO THE GROUTED RECESS.

FOR GROUT FOR STRUCTURES, SEE SPECIAL PROVISIONS.

THE PERMITTED THREADED INSERTS ARE DETAILED AS AN OPTION FOR THE CONTRACTOR TO ATTACH FALSEWORK AND FORMWORK DURING CONSTRUCTION.

THE PERMITTED THREADED INSERTS IN THE EXTERIOR UNITS SHALL BE SIZED BY THE CONTRACTOR, SPACED AT 4'-0" CENTERS AND GALVANIZED IN ACCORDANCE WITH SECTION 1076 OF THE STANDARD SPECIFICATIONS. STAINLESS STEEL THREADED INSERTS MAY BE USED AS AN ALTERNATE.

THE PERMITTED THREADED INSERTS SHALL BE GROUTED BY THE CONTRACTOR IMMEDIATELY FOLLOWING REMOVAL OF THE FALSEWORK.

THE COST OF THE PERMITTED THREADED INSERTS SHALL BE INCLUDED IN THE PRICE BID FOR THE PRECAST UNITS.

BILL OF MATERIAL FOR VERTICAL CONCRETE BARRIER RAIL

BAR	BARS PER PAIR OF EXTERIOR UNITS	TOTAL NO.	SIZE	TYPE	LENGTH	WEIGHT
	70' UNIT					
✳B21	144	144	#5	STR	13'-8"	2053
✳S13	158	158	#5	2	7'-6"	1236
✳EPOXY COATED REINFORCING STEEL				LBS.		3289
CLASS AA CONCRETE				CU.YDS.		18.4
TOTAL VERTICAL CONCRETE BARRIER RAIL				LIN. FT.		140.26

DEAD LOAD DEFLECTION AND CAMBER

	3'-0" x 2'-0"
70' CORED SLAB UNIT	0.6" Ø L.R. STRAND
CAMBER (SLAB ALONE IN PLACE)	2 1/4" ↑
DEFLECTION DUE TO SUPERIMPOSED DEAD LOAD✳✳	3/8" ↓
FINAL CAMBER	1 7/8" ↑

✳✳ DEFLECTION DUE TO DEAD LOAD OF RAILS AND FUTURE WEARING SURFACE IS NOT INCLUDED.

GUTTERLINE CONCRETE WEARING SURFACE THICKNESS & RAIL HEIGHT

	CONCRETE WEARING SURFACE THICKNESS	RAIL HEIGHT
	@ MID-SPAN	@ MID-SPAN
70' UNITS	3 1/8"	3'-9 1/8"

CONCRETE RELEASE STRENGTH

UNIT	PSI
70' UNITS	5500

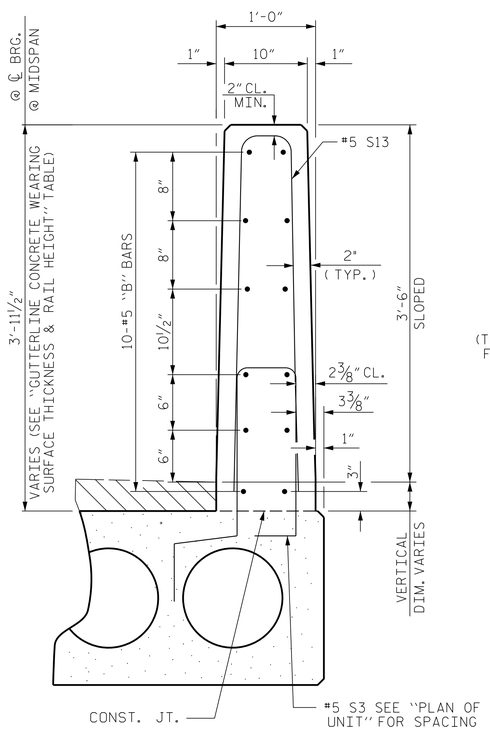

SECTION THRU RAIL

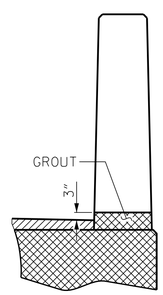

SECTION T-T
AT OPEN JOINT AT BENT
(THIS IS TO BE USED WHERE FOAM JOINT IS NOT USED)

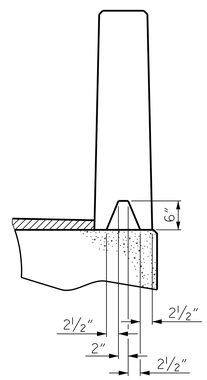

SECTION S-S
AT DAM IN OPEN JOINT
(THIS IS TO BE USED ONLY WHEN SLIP FORM IS USED)

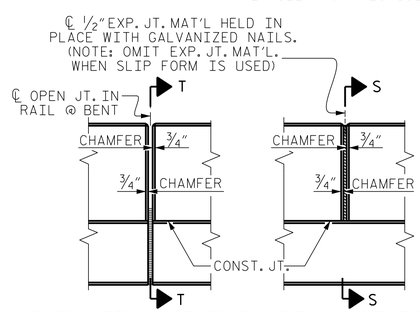

ELEVATION AT EXPANSION JOINTS

VERTICAL CONCRETE BARRIER RAIL DETAILS

GRADE 270 STRANDS

	0.6" Ø L.R.
AREA (SQUARE INCHES)	0.217
ULTIMATE STRENGTH (LBS. PER STRAND)	58,600
APPLIED PRESTRESS (LBS. PER STRAND)	43,950

DOCUMENT NOT CONSIDERED FINAL UNLESS ALL SIGNATURES COMPLETED

ENGINEER OF RECORD
Docusigned by: Buck Charles Hunt
NORTH CAROLINA PROFESSIONAL SEAL 14091 ENGINEER BUCK CHARLES HUNT
6/24/2019

WETHERILL ENGINEERING
1223 Jones Franklin Rd.
Raleigh, N.C. 27606
Bus: 919 851 8077
Fax: 919 851 8107
LICENSE NO. F-0377

PROJECT NO. 17BP.4.R.110
WAYNE COUNTY
STATION: 20+20.00 -LREV.-

SHEET 3 OF 3

STATE OF NORTH CAROLINA
DEPARTMENT OF TRANSPORTATION
RALEIGH

3'-0" X 2'-0"
PRESTRESSED CONCRETE
CORED SLAB UNIT
SPAN B

REVISIONS						SHEET NO.
NO.	BY:	DATE:	NO.	BY:	DATE:	S01-10
1			3			TOTAL SHEETS
2			4			24

DRAWN BY : B.C. HUNT DATE : 5-19
CHECKED BY : T.K. KOCH DATE : 5-19

P:\2019\19103.01_Wayne_12\Structures\DGN\17BP.R.4.110_SMU_CS.dgn
6/24/2019 9:14:42 AM

DocuSign Envelope ID: F49F7727-26E0-4B0F-8253-A3708F92C285

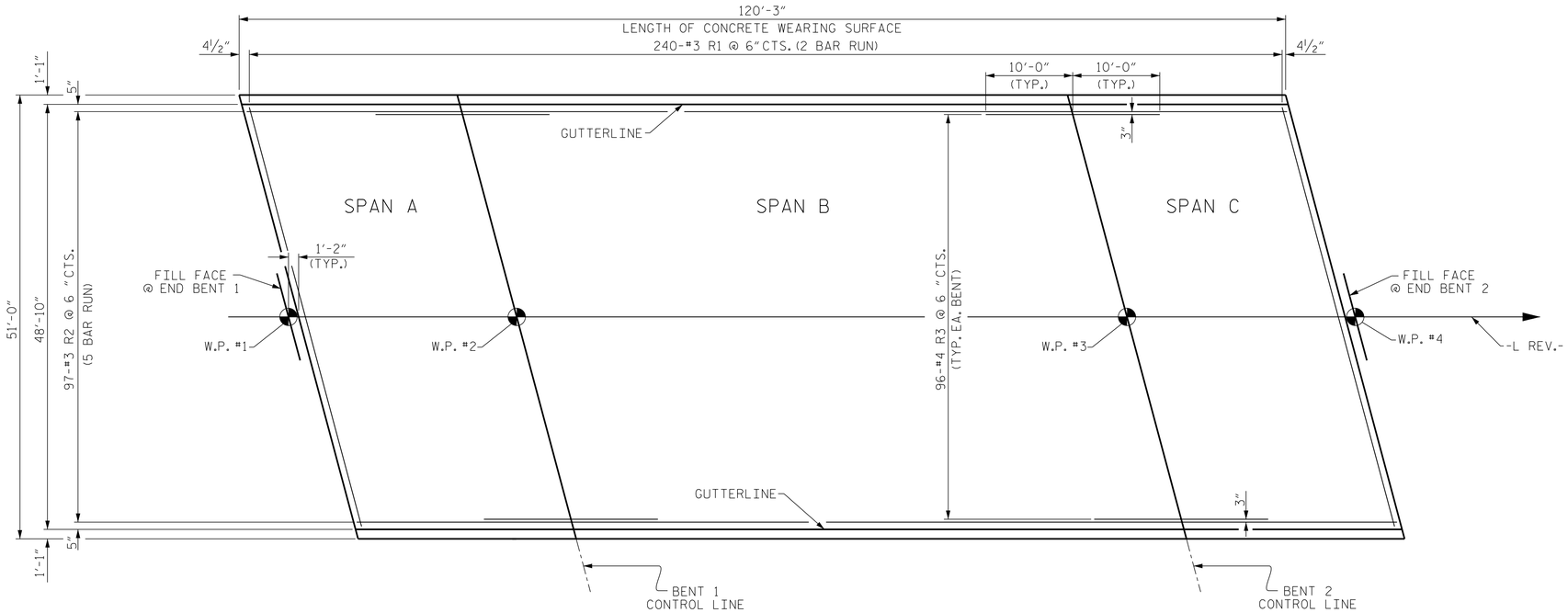

PLAN SHOWING CONCRETE WEARING SURFACE REINFORCING STEEL

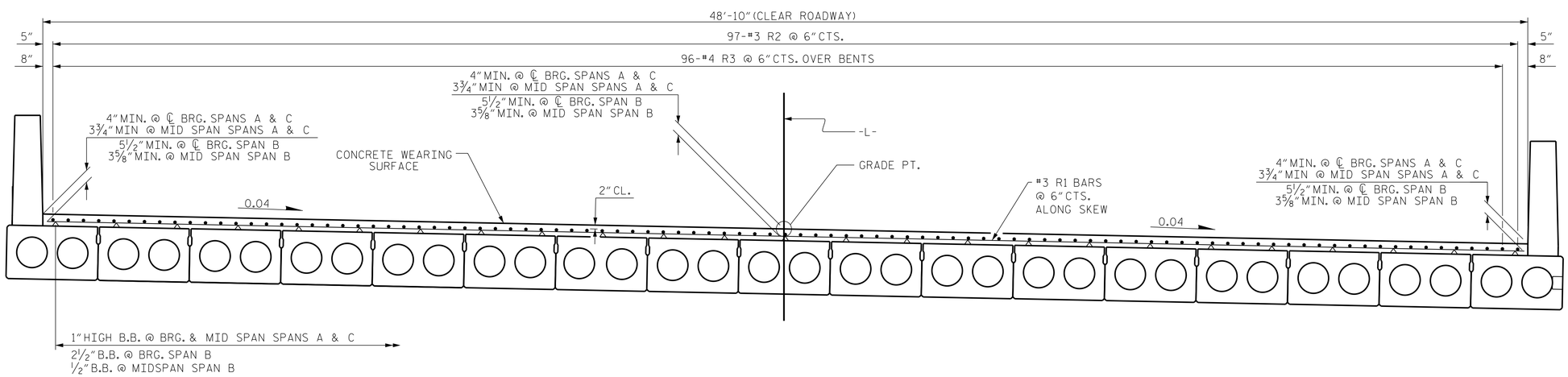

NOTE: MAXIMUM SPACING OF BEAM BOLSTERS IS 2'-0"

REINFORCING FOR CONCRETE WEARING SURFACE

** BASED ON PREDICTED FINAL CAMBER AND THEORETICAL GRADE LINE ELEVATIONS

NOTES:

PLACEMENT OF THE CONCRETE WEARING SURFACE SHALL OCCUR AFTER CASTING THE VERTICAL CONCRETE BARRIER RAIL. THE COST OF THE #3 BARS CAST WITH THE CONCRETE WEARING SURFACE SHALL BE INCLUDED IN THE UNIT PRICE BID FOR CONCRETE WEARING SURFACE. FOR CONCRETE WEARING SURFACE, SEE SPECIAL PROVISIONS.

ALL REINFORCING FOR CONCRETE WEARING SURFACE SHALL BE EPOXY COATED.

BILL OF MATERIAL FOR CONCRETE WEARING SURFACE

BAR	NO.	SIZE	TYPE	LENGTH	WEIGHT
* R1	480	#3	STR	25'-9"	4647
* R2	485	#3	STR	25'-0"	4559
* R3	192	#4	STR	20'-0"	2565

* EPOXY COATED REINFORCING STEEL 11771 LBS.
CONCRETE WEARING SURFACE 5872 SQ.FT.

SPLICE LENGTH CHART

BAR SIZE	EPOXY COATED
#3	1'-3"

GROOVING BRIDGE FLOORS

APPROACH SLABS	1053 SQ.FT.
BRIDGE WEARING SURFACE	5512 SQ.FT.
TOTAL	6565 SQ.FT.

PROJECT NO. 17BP.4.R.110
WAYNE COUNTY
STATION: 20+20.00 -LREV.-

DRAWN BY : B.C. HUNT DATE : 5-19
CHECKED BY : T.K. KOCH DATE : 5-19

DOCUMENT NOT CONSIDERED FINAL UNLESS ALL SIGNATURES COMPLETED

ENGINEER OF RECORD
DocuSigned by: Buck Charles Hunt
NORTH CAROLINA PROFESSIONAL SEAL 14091 ENGINEER BUCK CHARLES HUNT
6/24/2019

WETHERILL ENGINEERING
1223 Jones Franklin Rd.
Raleigh, N.C. 27606
Bus: 919 851 8077
Fax: 919 851 8107
LICENSE NO. F-0377

STATE OF NORTH CAROLINA
DEPARTMENT OF TRANSPORTATION
RALEIGH

CONCRETE WEARING SURFACE DETAILS

REVISIONS						SHEET NO.
NO.	BY:	DATE:	NO.	BY:	DATE:	S01-11
1			3			TOTAL SHEETS
2			4			24

P:\2019\19103.01_Wayne_12\Structures\DGN\17BP.R.4.110_SMU_CS.dgn
6/24/2019 9:15:23 AM

DocuSign Envelope ID: F49F7727-26E0-4B0F-8253-A3708F92C285

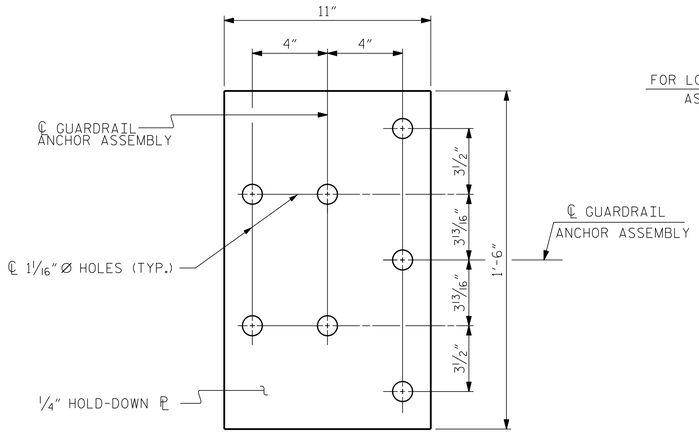

PLAN

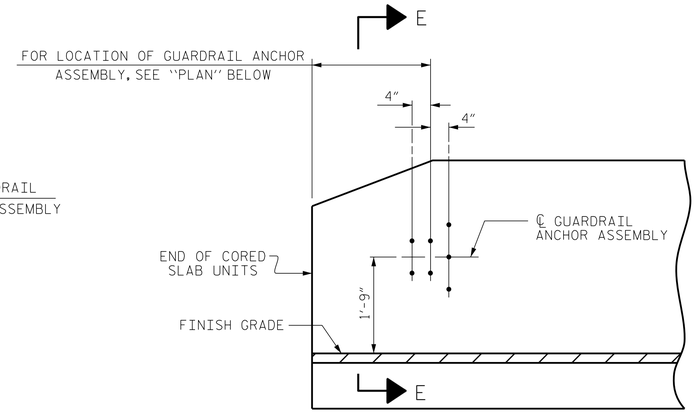

ELEVATION

NOTES

THE GUARDRAIL ANCHOR ASSEMBLY SHALL CONSIST OF A 1/4" HOLD DOWN PLATE AND 7 - 7/8" Ø BOLTS WITH NUTS AND WASHERS.

THE HOLD-DOWN PLATE SHALL CONFORM TO AASHTO M270 GRADE 36. AFTER FABRICATION, THE HOLD-DOWN PLATE SHALL BE HOT-DIP GALVANIZED IN ACCORDANCE WITH AASHTO M111.

BOLTS SHALL CONFORM TO THE REQUIREMENTS OF ASTM A307 AND NUTS SHALL CONFORM TO THE REQUIREMENTS OF AASHTO M291. BOLTS, NUTS AND WASHERS SHALL BE GALVANIZED. (AT THE CONTRACTOR'S OPTION, STAINLESS STEEL BOLTS, NUTS AND WASHERS MAY BE USED AS AN ALTERNATE FOR THE 7/8" Ø GALVANIZED BOLTS, NUTS AND WASHERS. THEY SHALL CONFORM TO OR EXCEED THE MECHANICAL REQUIREMENTS OF ASTM A307. THE USE OF THIS ALTERNATE SHALL BE APPROVED BY THE ENGINEER.)

THE GUARDRAIL ANCHOR ASSEMBLY IS REQUIRED AT ALL POINTS WHERE APPROACH GUARDRAIL IS TO BE ATTACHED TO THE END OF BARRIER RAIL. FOR POINTS OF ATTACHMENT, SEE SKETCH.

AFTER INSTALLATION, THE EXPOSED THREAD OF THE BOLT SHALL BE BURRED WITH A SHARP POINTED TOOL.

THE COST OF THE GUARDRAIL ANCHOR ASSEMBLY SHALL BE INCLUDED IN THE UNIT CONTRACT PRICE BID FOR VERTICAL CONCRETE BARRIER RAIL.

THE VERTICAL REINFORCING BARS MAY BE SHIFTED SLIGHTLY IN THE VERTICAL CONCRETE BARRIER RAIL TO CLEAR ASSEMBLY BOLTS.

THE 1 1/4" Ø HOLES SHALL BE FORMED OR DRILLED WITH A CORE BIT. IMPACT TOOLS WILL NOT BE PERMITTED. ANY CONCRETE DAMAGED BY THIS WORK SHALL BE REPAIRED TO THE SATISFACTION OF THE ENGINEER.

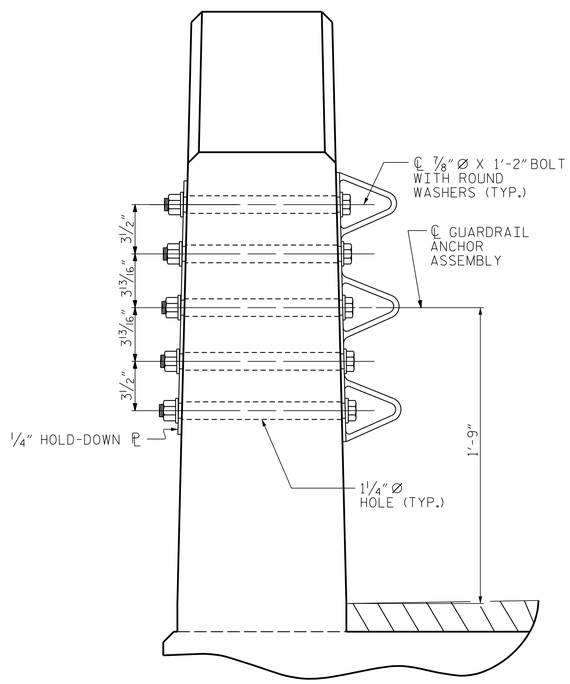

SECTION E-E

GUARDRAIL ANCHOR ASSEMBLY DETAILS

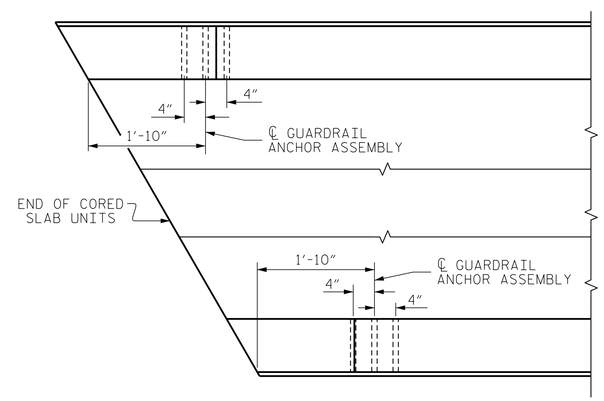

PLAN

LOCATION OF ANCHORS FOR GUARDRAIL

END BENT #1 SHOWN, END BENT #2 SIMILAR.

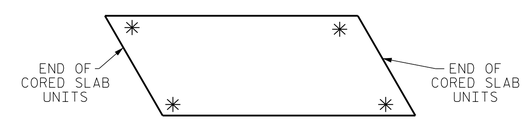

SKETCH SHOWING POINTS OF ATTACHMENT

✳ DENOTES GUARDRAIL ANCHOR ASSEMBLY

PROJECT NO. 17BP.4.R.110
WAYNE COUNTY
STATION: 20+20.00 -LREV.-

ENGINEER OF RECORD
DocuSigned by: Buck Charles Hunt
NORTH CAROLINA PROFESSIONAL SEAL 14091 ENGINEER BUCK CHARLES HUNT
6/24/2019
WETHERILL ENGINEERING
1223 Jones Franklin Rd.
Raleigh, N.C. 27606
Bus: 919 851 8077
Fax: 919 851 8107
LICENSE NO. F-0377

STATE OF NORTH CAROLINA
DEPARTMENT OF TRANSPORTATION
RALEIGH

STANDARD
GUARDRAIL ANCHORAGE DETAILS
FOR VERTICAL CONCRETE BARRIER RAIL

REVISIONS						SHEET NO.
NO.	BY:	DATE:	NO.	BY:	DATE:	S01-12
1			3			TOTAL SHEETS
2			4			24

DOCUMENT NOT CONSIDERED FINAL UNLESS ALL SIGNATURES COMPLETED

ASSEMBLED BY : B.C. HUNT		DATE : 5-19	
CHECKED BY : T.K. KOCH		DATE : 5-19	
DRAWN BY : MAA 5/10	REV. 1/15	MAA/TMG	
CHECKED BY : GM 5/10	REV. 12/17	MAA/THC	
	REV. 5/18	MAA/THC	

P:\2019\19103.01_Wayne_121\Structures\DGN\17BP.R.110_SMU_CS.dgn
6/24/2019 9:16:09 AM

DocuSign Envelope ID: F49F7727-26E0-4B0F-8253-A3708F92C285

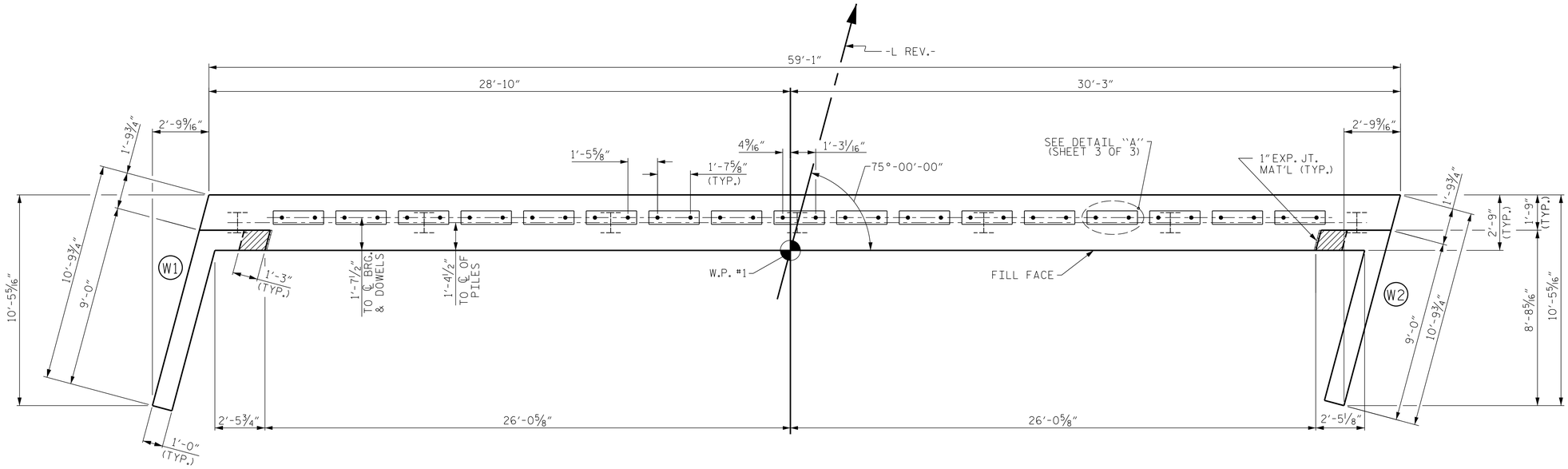

PLAN

NOTES

STIRRUPS IN CAP MAY BE SHIFTED AS NECESSARY TO CLEAR DOWELS.

THE CONCRETE IN THE SHADED AREA OF THE WING SHALL BE POURED AFTER THE VERTICAL CONCRETE BARRIER RAIL IS CAST IF SLIP FORMING IS USED.

FOR PILE SPLICE DETAILS, SEE SHEET 3 OF 3.

FOR WING DETAILS, SEE SHEET 2 OF 3.

TOP OF PILE ELEVATIONS	
1	91.06
2	90.73
3	90.40
4	90.08
5	89.75
6	89.43
7	89.10

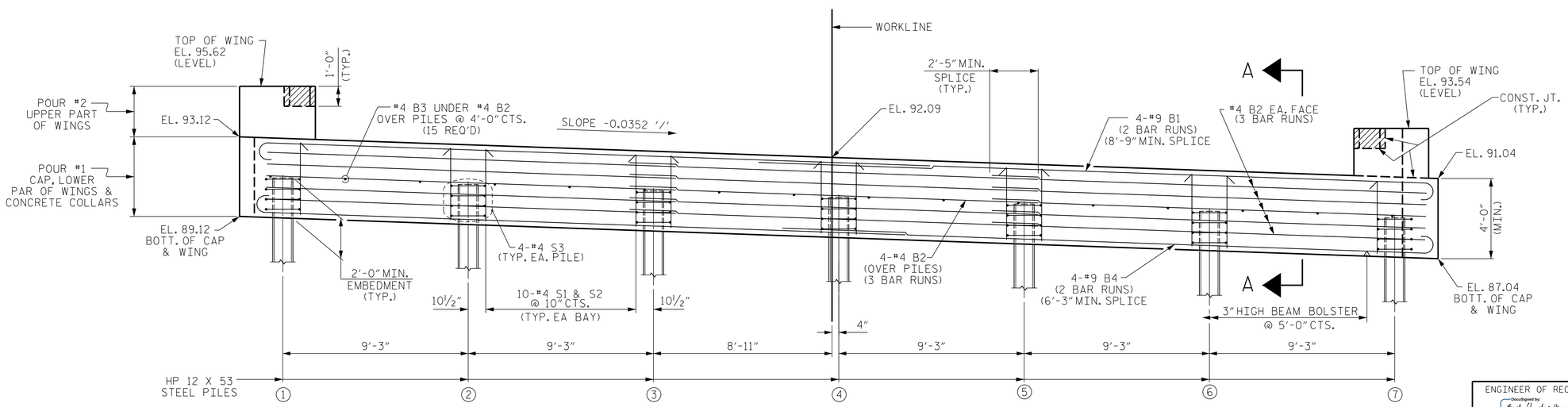

ELEVATION

WINGS NOT SHOWN FOR CLARITY.
FOR SECTION A-A, SEE SHEET 3 OF 3.
CONCRETE COLLARS FOR STEEL PILES NOT SHOWN IN PLAN AND ELEVATION VIEWS FOR CLARITY.
SEE "CORROSION PROTECTION FOR STEEL PILES DETAIL", SHEET 3 OF 3.

PROJECT NO. 17BP.4.R.110
WAYNE COUNTY
STATION: 20+20.00 -LREV.-

SHEET 1 OF 3

ENGINEER OF RECORD
DocuSigned by: Buck Charles Hunt
NORTH CAROLINA PROFESSIONAL SEAL 14091 ENGINEER BUCK CHARLES HUNT
6/24/2019

WETHERILL ENGINEERING
1223 Jones Franklin Rd.
Raleigh, N.C. 27606
Bus: 919 851 8077
Fax: 919 851 8107
LICENSE NO. F-0377

STATE OF NORTH CAROLINA
DEPARTMENT OF TRANSPORTATION
RALEIGH

SUBSTRUCTURE

END BENT No. 1

REVISIONS								SHEET NO.
NO.	BY:	DATE:	NO.	BY:	DATE:			S01-13
1			3					TOTAL SHEETS
2			4					24

DOCUMENT NOT CONSIDERED FINAL UNLESS ALL SIGNATURES COMPLETED

DRAWN BY : B.C. HUNT DATE : 5-19
CHECKED BY : T.K. KOCH DATE : 5-19

P:\2019\19103.01_Wayne_12\Structures\DGN\17BP.R.4.110_SMU_EBT.dgn
6/24/2019 9:16:50 AM

DocuSign Envelope ID: F49F7727-26E0-4B0F-8253-A3708F92C285

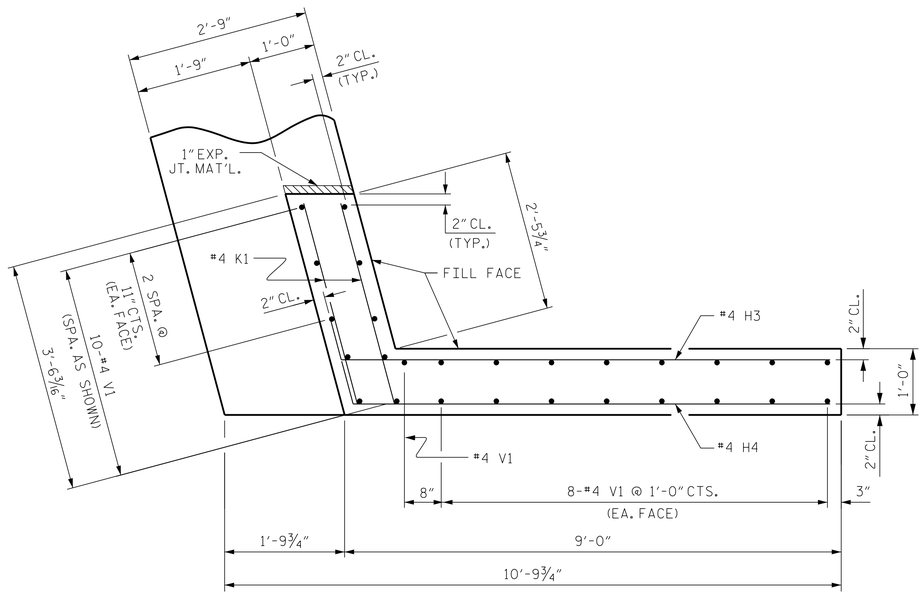

PLAN OF WING (W1)

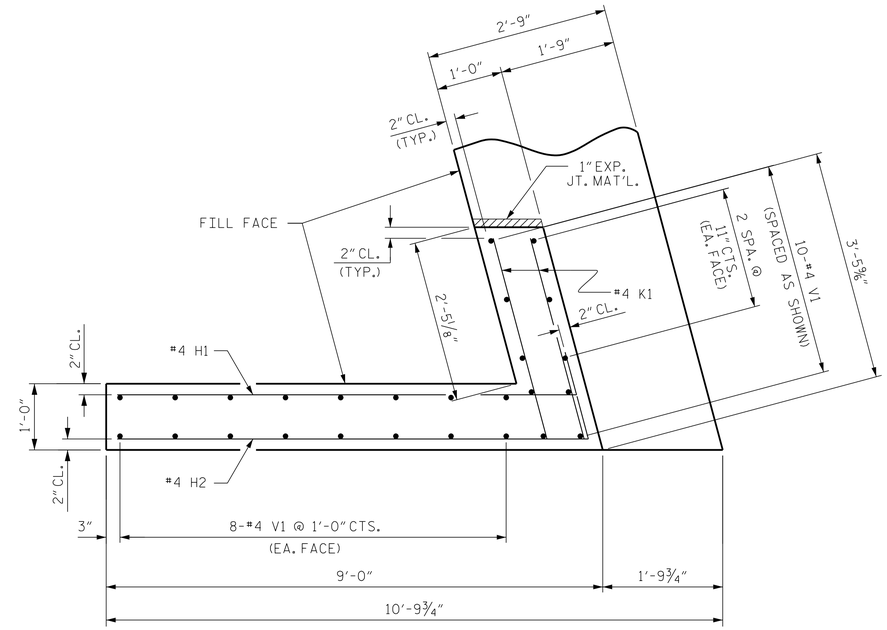

PLAN OF WING (W2)

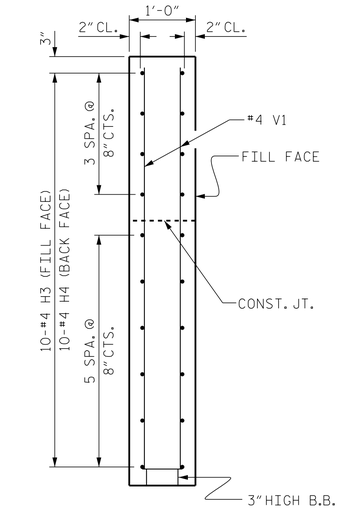

SECTION X-X

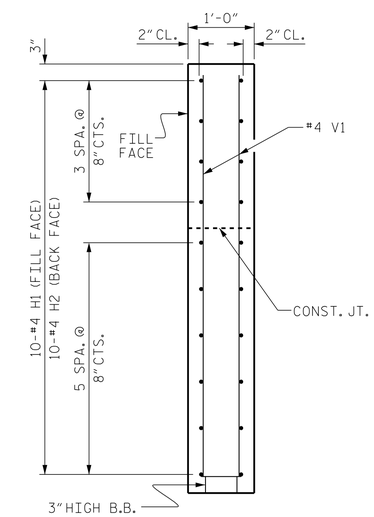

SECTION Y-Y

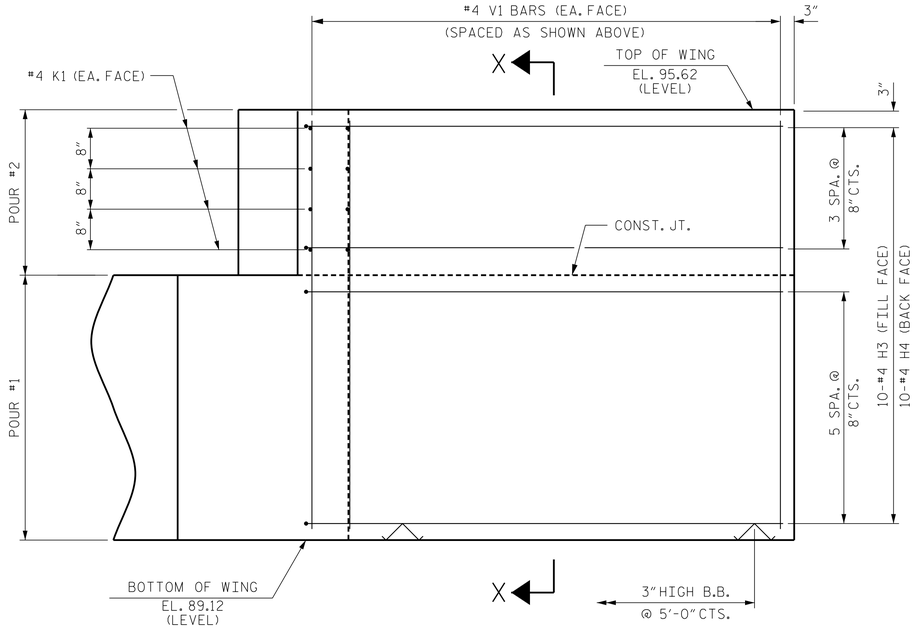

ELEVATION OF WING (W1)

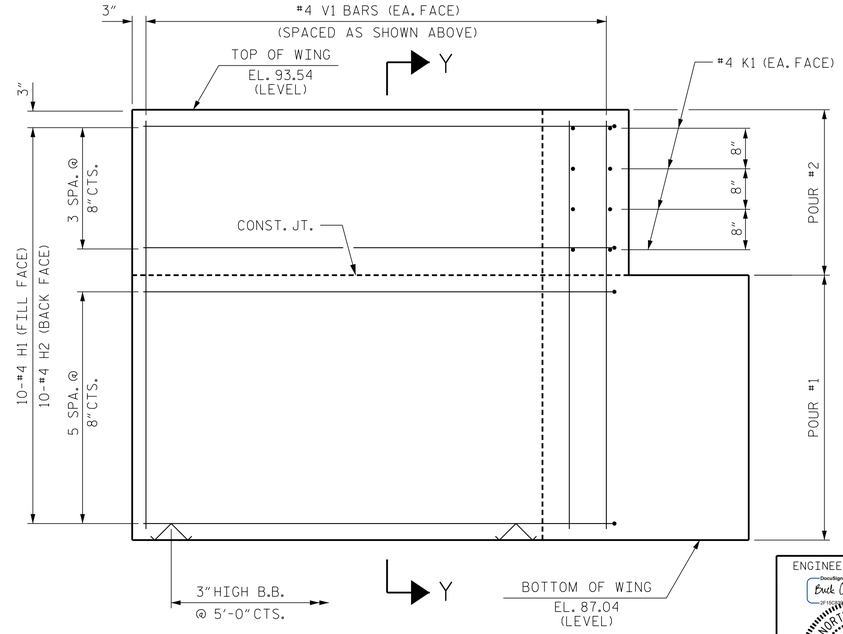

ELEVATION OF WING (W2)

WING DETAILS

PROJECT NO. 17BP.4.R.110

WAYNE COUNTY

STATION: 20+20.00 -LREV.-

SHEET 2 OF 3

ENGINEER OF RECORD

Docusigned by: Buck Charles Hunt 2/19/2019

NORTH CAROLINA PROFESSIONAL SEAL 14091 ENGINEER BUCK CHARLES HUNT

6/24/2019

WETHERILL ENGINEERING

1223 Jones Franklin Rd.
Raleigh, N.C. 27606
Bus: 919 851 8077
Fax: 919 851 8107
LICENSE NO. F-0377

STATE OF NORTH CAROLINA
DEPARTMENT OF TRANSPORTATION
RALEIGH

SUBSTRUCTURE
END BENT No. 1

REVISIONS						SHEET NO.
NO.	BY:	DATE:	NO.	BY:	DATE:	S01-14
1			3			TOTAL SHEETS
2			4			24

DRAWN BY : B.C. HUNT DATE : 5-19
CHECKED BY : T.K. KOCH DATE : 5-19

DOCUMENT NOT CONSIDERED FINAL UNLESS ALL SIGNATURES COMPLETED

P:\2019\19103.01_Wayne_12\Structures\DGN\17BP.R.4.110_SW0_EBT.dgn
6/24/2019 9:17:13 AM

DocuSign Envelope ID: F49F7727-26E0-4B0F-8253-A3708F92C285

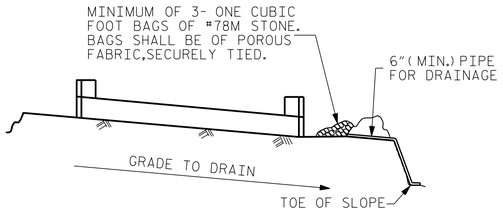

BAGGED STONE AND PIPE SHALL BE PLACED IMMEDIATELY AFTER COMPLETION OF END BENT EXCAVATION. PIPE MAY BE EITHER CONCRETE, CORRUGATED STEEL, CORRUGATED ALUMINUM ALLOY, OR CORRUGATED PLASTIC. PERFORATED PIPE WILL NOT BE ALLOWED.

BAGGED STONE SHALL REMAIN IN PLACE UNTIL THE ENGINEER DIRECTS THAT IT BE REMOVED. THE CONTRACTOR SHALL REMOVE AND DISPOSE OF SILT ACCUMULATIONS AT BAGGED STONE WHEN SO DIRECTED BY THE ENGINEER. BAGS SHALL BE REMOVED AND REPLACED WHENEVER THE ENGINEER DETERMINES THAT THEY HAVE DETERIORATED AND LOST THEIR EFFECTIVENESS.

NO SEPARATE PAYMENT WILL BE MADE FOR THIS WORK AND THE ENTIRE COST OF THIS WORK SHALL BE INCLUDED IN THE UNIT CONTRACT PRICE BID FOR THE SEVERAL PAY ITEMS.

TEMPORARY DRAINAGE AT END BENT

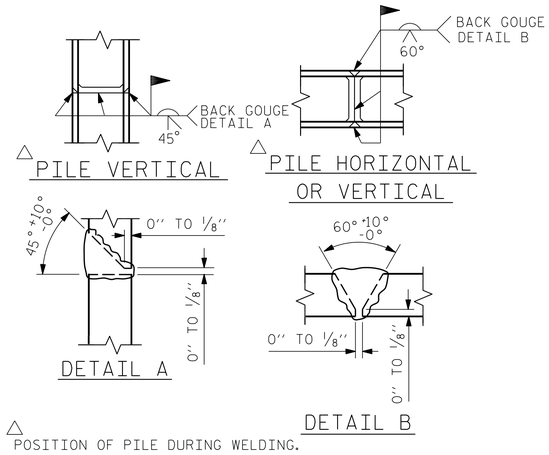

△ POSITION OF PILE DURING WELDING.

PILE SPLICE DETAILS

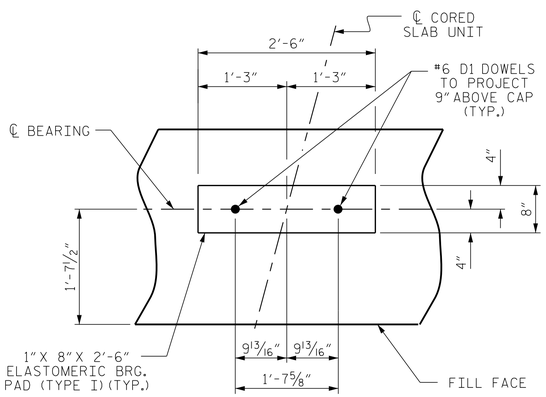

DETAIL "A"

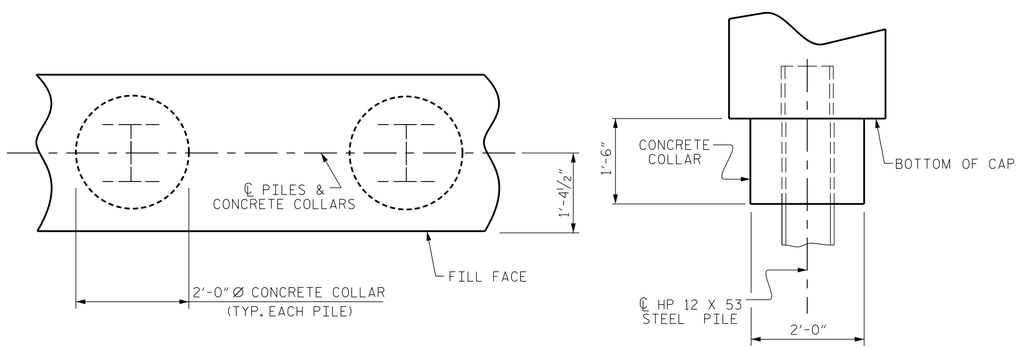

PLAN

ELEVATION

CORROSION PROTECTION FOR STEEL PILES DETAIL

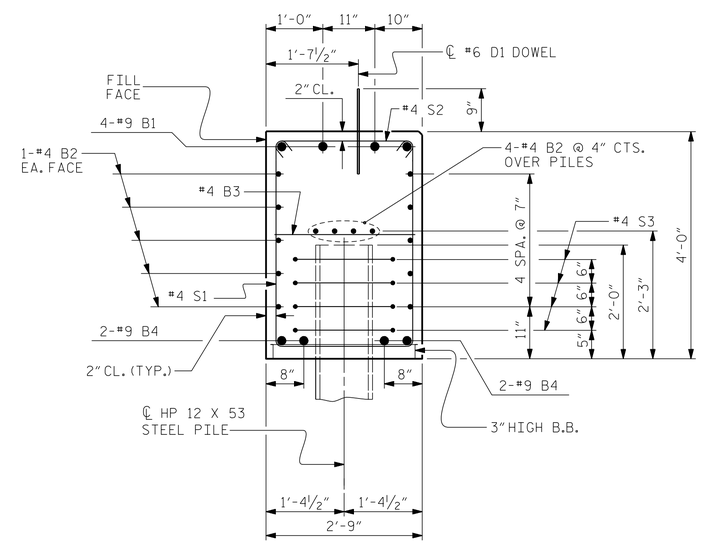

SECTION A-A

(CONCRETE COLLAR NOT SHOWN FOR CLARITY. SEE "CORROSION PROTECTION FOR STEEL PILES DETAIL.")

BAR TYPES

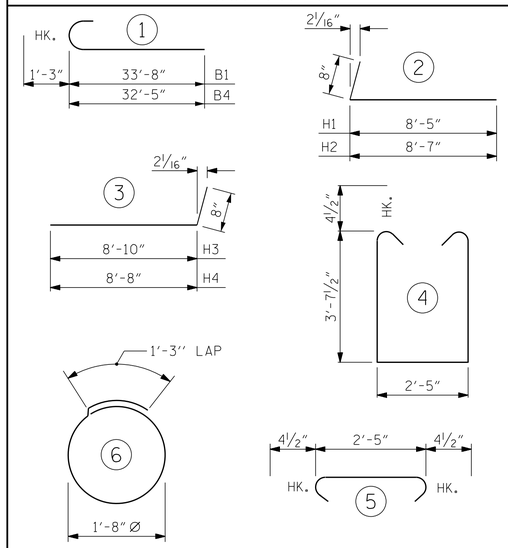

ALL BAR DIMENSIONS ARE OUT TO OUT.

BILL OF MATERIAL

END BENT No. 1

BAR	NO.	SIZE	TYPE	LENGTH	WEIGHT
B1	8	#9	1	34'-11"	950
B2	42	#4	STR	21'-3"	596
B3	15	#4	STR	2'-5"	24
B4	8	#9	1	33'-8"	916
D1	34	#6	STR	1'-6"	77
H1	10	#4	2	9'-1"	61
H2	10	#4	2	9'-3"	62
H3	10	#4	3	9'-6"	63
H4	10	#4	3	9'-4"	62
K1	16	#4	STR	3'-2"	34
S1	60	#4	4	10'-5"	418
S2	60	#4	5	3'-2"	127
S3	28	#4	6	6'-6"	122
V1	53	#4	STR	6'-2"	218

REINFORCING STEEL (FOR ONE END BENT) 3730 LBS.

CLASS A CONCRETE BREAKDOWN

POUR #1 CAP, LOWER PART OF WINGS & COLLARS 27.7 C.Y.

POUR #2 UPPER PART OF WINGS 2.1 C.Y.

TOTAL CLASS A CONCRETE 29.8 C.Y.

HP 12 X 53 STEEL PILES
NO: 7 LIN. FT.= 364

PILE DRIVING EQUIPMENT SETUP FOR HP 12 X 53 STEEL PILES NO: 7

PILE REDRIVES NO: 4

PROJECT NO. 17BP.4.R.110
WAYNE COUNTY
STATION: 20+20.00 -LREV.-

SHEET 3 OF 3

ENGINEER OF RECORD
DocuSigned by: Buck Charles Hunt
NORTH CAROLINA PROFESSIONAL SEAL 14091 ENGINEER BUCK CHARLES HUNT
6/24/2019

WETHERILL ENGINEERING
1223 Jones Franklin Rd.
Raleigh, N.C. 27606
Bus: 919 851 8077
Fax: 919 851 8107
LICENSE NO. F-0377

STATE OF NORTH CAROLINA
DEPARTMENT OF TRANSPORTATION
RALEIGH

SUBSTRUCTURE
END BENT No. 1

REVISIONS						SHEET NO.
NO.	BY:	DATE:	NO.	BY:	DATE:	S01-15
1			3			TOTAL SHEETS
2			4			24

DRAWN BY : B.C. HUNT DATE : 5-19
CHECKED BY : T.K. KOCH DATE : 5-19

DOCUMENT NOT CONSIDERED FINAL UNLESS ALL SIGNATURES COMPLETED

P:\2019\19103.01_Wayne_12\Structures\DGN\17BP.R.110_SMU_EBT.dgn
6/24/2019 9:17:46 AM

DocuSign Envelope ID: F49F7727-26E0-4B0F-8253-A3708F92C285

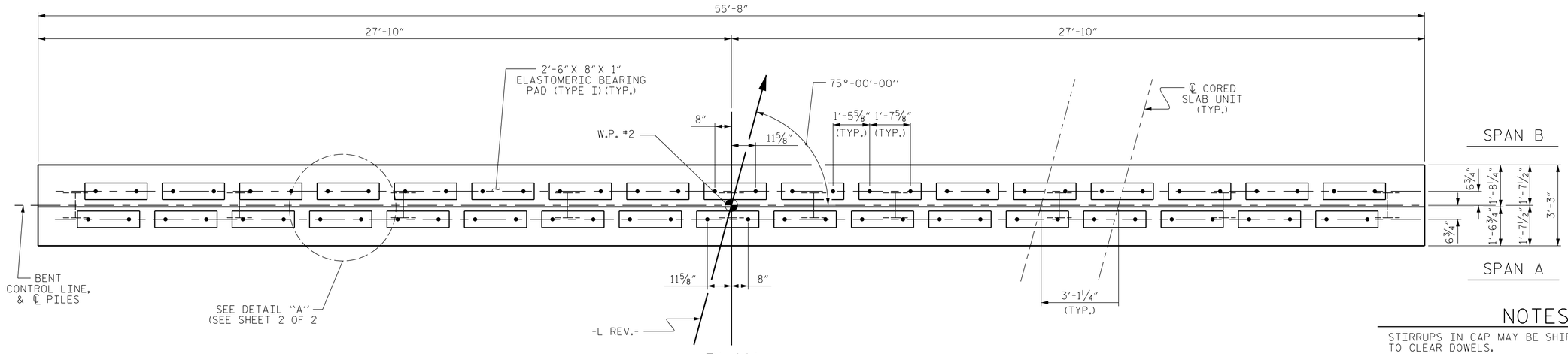

PLAN

NOTES

STIRRUPS IN CAP MAY BE SHIFTED AS NECESSARY TO CLEAR DOWELS.

★ INVERT ALTERNATE STIRRUPS.

GALVANIZE THE TOP OF EACH INTERIOR BENT PILE A MINIMUM OF 24.0 FEET. GALVANIZE IN ACCORDANCE WITH SECTION 1076 OF THE STANDARD SPECIFICATIONS.

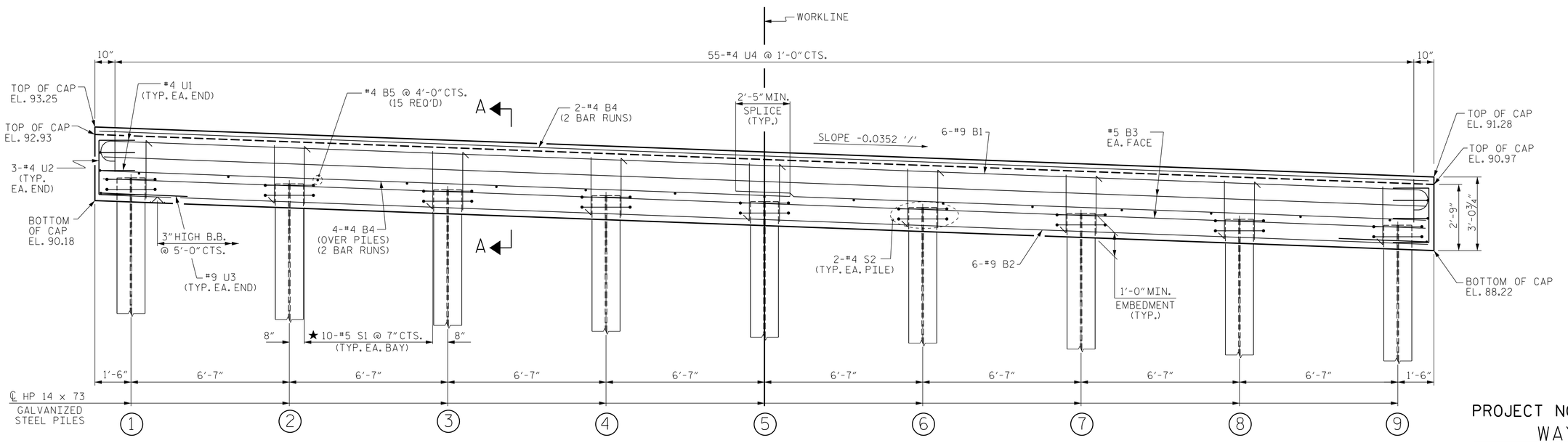

ELEVATION

FOR SECTION A-A, SEE SHEET 2 OF 2

TOP OF PILE ELEVATIONS			
1	91.13	6	89.97
2	90.90	7	89.74
3	90.66	8	89.51
4	90.43	9	89.27
5	90.20		

PROJECT NO. 17BP.4.R.110

WAYNE COUNTY

STATION: 20+20.00 -LREV.-

SHEET 1 OF 2

ENGINEER OF RECORD

Docusigned by: Buck Charles Hunt

NORTH CAROLINA PROFESSIONAL SEAL 14091 ENGINEER BUCK CHARLES HUNT

6/24/2019

WETHERILL ENGINEERING

1223 Jones Franklin Rd.
Raleigh, N.C. 27606
Bus: 919 851 8077
Fax: 919 851 8107
LICENSE NO. F-0377

STATE OF NORTH CAROLINA
DEPARTMENT OF TRANSPORTATION
RALEIGH

SUBSTRUCTURE

BENT No. 1

REVISIONS						SHEET NO.
NO.	BY:	DATE:	NO.	BY:	DATE:	S01-16
1			3			TOTAL SHEETS
2			4			24

DRAWN BY : B.C. HUNT DATE : 5-19
CHECKED BY : T.K. KOCH DATE : 5-19

DOCUMENT NOT CONSIDERED FINAL UNLESS ALL SIGNATURES COMPLETED

P:\2019\19103.0.1_Wayne_121\Structures\DGN\17BP.R.4.110_SMU_BT.dgn
6/24/2019 9:18:36 AM

DocuSign Envelope ID: F49F7727-26E0-4B0F-8253-A3708F92C285

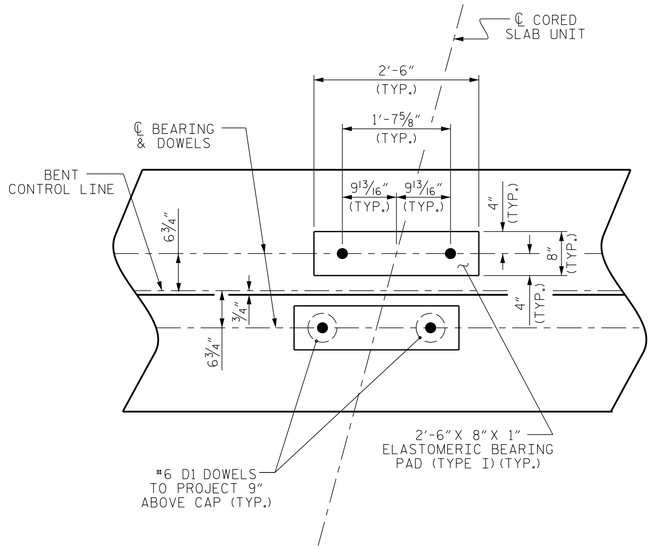

DETAIL "A"

(DIMENSIONS ARE TYPICAL EACH BEARING)

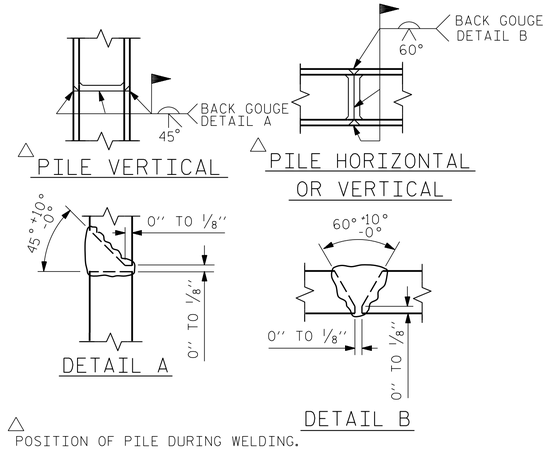

△ POSITION OF PILE DURING WELDING.

PILE SPLICE DETAILS

BAR TYPES

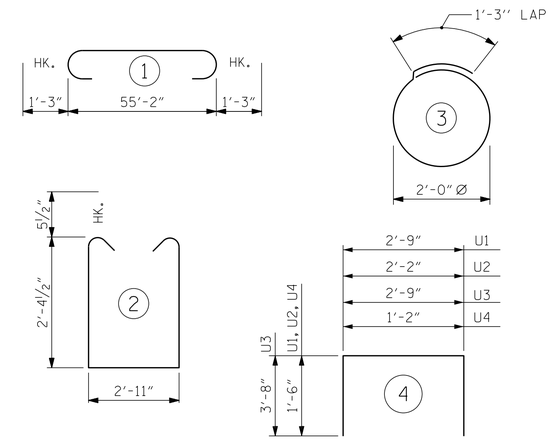

ALL BAR DIMENSIONS ARE OUT TO OUT.

BILL OF MATERIAL

BENT No. 1

BAR	NO.	SIZE	TYPE	LENGTH	WEIGHT
B1	6	#9	1	57'-8"	1176
B2	6	#9	STR	55'-4"	1129
B3	4	#5	STR	55'-4"	231
B4	12	#4	STR	28'-11"	232
B5	15	#4	STR	2'-11"	29
D1	68	#6	STR	1'-6"	153
S1	80	#5	2	8'-7"	716
S2	18	#4	3	7'-7"	91
U1	4	#4	4	5'-9"	15
U2	6	#4	4	5'-2"	21
U3	2	#9	4	10'-1"	69
U4	55	#4	4	4'-2"	153

REINFORCING STEEL 4015 LBS

CLASS A CONCRETE BREAKDOWN

TOTAL CLASS A CONCRETE 19.4 C.Y.

HP 14 X 73 GALVANIZED STEEL PILES

No. 9 LIN. FT. 639

PILE DRIVING EQUIPMENT SETUP FOR HP 14 X 73 GALVANIZED STEEL PILES

NO: 9

PILE REDRIVES NO: 5

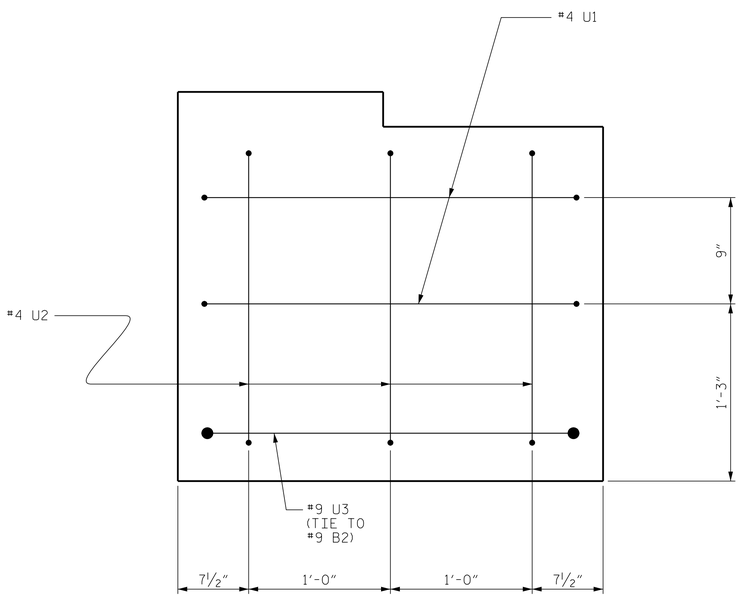

END OF CAP VIEW

(TYPICAL BOTH ENDS)

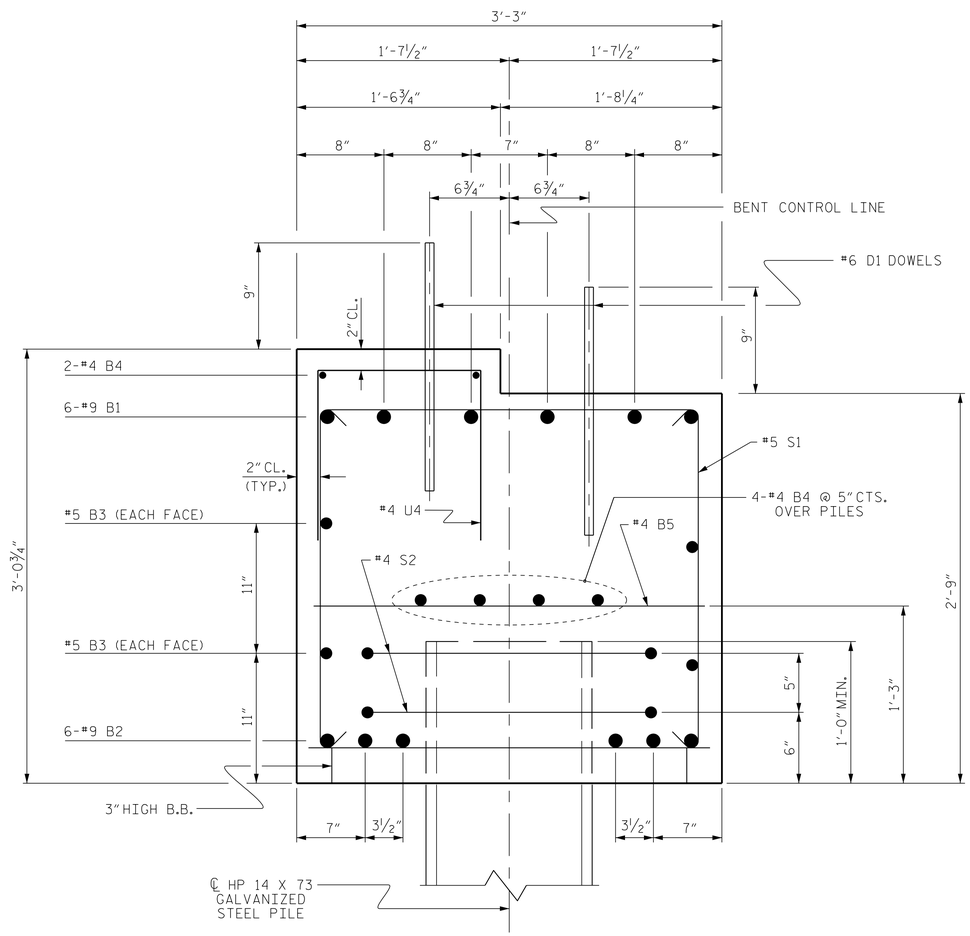

SECTION A-A

PROJECT NO. 17BP.4.R.110

WAYNE COUNTY

STATION: 20+20.00 -LREV.-

SHEET 2 OF 2

ENGINEER OF RECORD

Docusigned by: Buck Charles Hunt

NORTH CAROLINA PROFESSIONAL SEAL 14091 ENGINEER BUCK CHARLES HUNT

6/24/2019

WETHERILL ENGINEERING

1223 Jones Franklin Rd.
Raleigh, N.C. 27606
Bus: 919 851 8077
Fax: 919 851 8107
LICENSE NO. F-0377

STATE OF NORTH CAROLINA
DEPARTMENT OF TRANSPORTATION
RALEIGH

SUBSTRUCTURE

BENT No. 1

REVISIONS							SHEET NO.
NO.	BY:	DATE:	NO.	BY:	DATE:		S01-17
1			3				TOTAL SHEETS
2			4				24

DRAWN BY : B.C. HUNT DATE : 5-19

CHECKED BY : T.K. KOCH DATE : 5-19

DOCUMENT NOT CONSIDERED FINAL UNLESS ALL SIGNATURES COMPLETED

P:\2019\19103.01_Wayne_12 1\Structures\DGN\17BP.R.4.110_SMU_BT.dgn
6/24/2019 9:20:46 AM

DocuSign Envelope ID: F49F7727-26E0-4B0F-8253-A3708F92C285

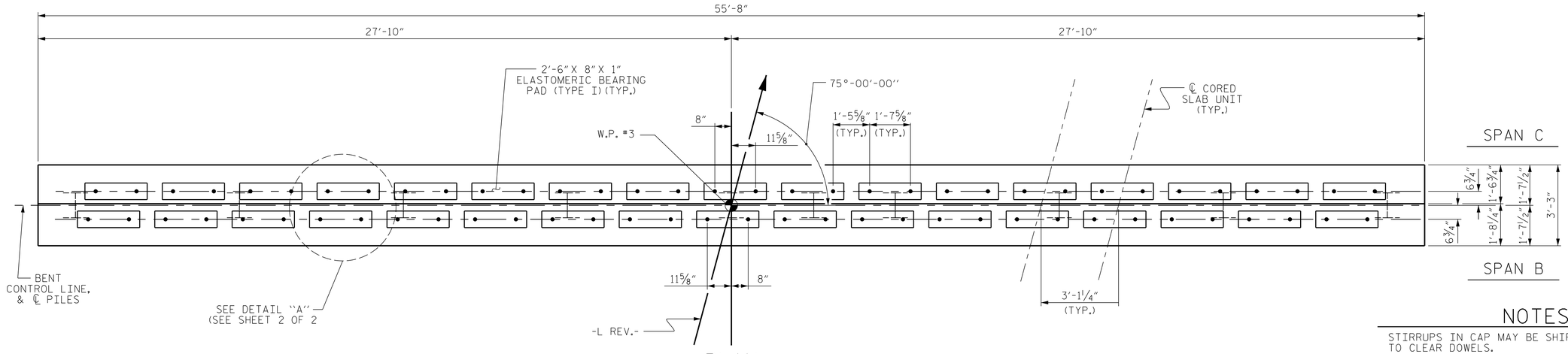

PLAN

NOTES

STIRRUPS IN CAP MAY BE SHIFTED AS NECESSARY TO CLEAR DOWELS.

★ INVERT ALTERNATE STIRRUPS.

GALVANIZE THE TOP OF EACH INTERIOR BENT PILE A MINIMUM OF 24.0 FEET. GALVANIZE IN ACCORDANCE WITH SECTION 1076 OF THE STANDARD SPECIFICATIONS.

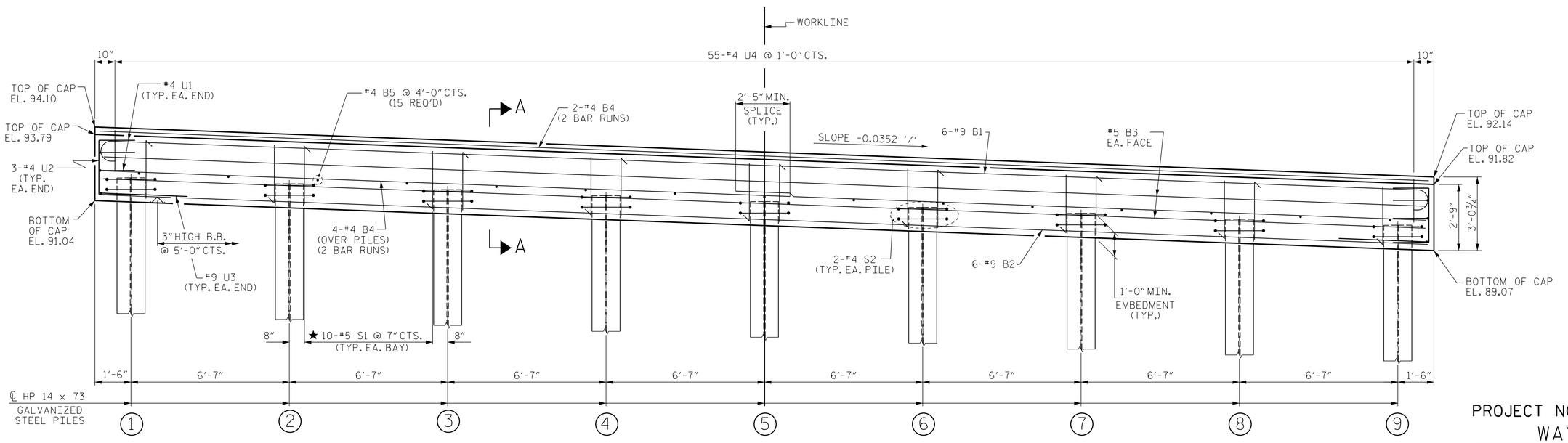

ELEVATION

FOR SECTION A-A, SEE SHEET 2 OF 2

TOP OF PILE ELEVATIONS			
1	91.99	6	90.83
2	91.76	7	90.60
3	91.52	8	90.37
4	91.29	9	90.13
5	91.06		

PROJECT NO. 17BP.4.R.110

WAYNE COUNTY

STATION: 20+20.00 -LREV.-

SHEET 1 OF 2

ENGINEER OF RECORD

Docu Signed by: Buck Charles Hunt

NORTH CAROLINA PROFESSIONAL SEAL 14091 ENGINEER BUCK CHARLES HUNT

6/24/2019

WETHERILL ENGINEERING

1223 Jones Franklin Rd.
Raleigh, N.C. 27606
Bus: 919 851 8077
Fax: 919 851 8107
LICENSE NO. F-0377

STATE OF NORTH CAROLINA
DEPARTMENT OF TRANSPORTATION
RALEIGH

SUBSTRUCTURE

BENT No. 2

REVISIONS						SHEET NO.
NO.	BY:	DATE:	NO.	BY:	DATE:	S01-18
1			3			TOTAL SHEETS
2			4			24

DRAWN BY : B.C. HUNT DATE : 5-19

CHECKED BY : T.K. KOCH DATE : 5-19

DOCUMENT NOT CONSIDERED FINAL UNLESS ALL SIGNATURES COMPLETED

P:\2019\19103.01_Wayne_121\Structures\DGN\17BP.R.4.110_SMU_BT.dgn
6/24/2019 9:21:15 AM

DocuSign Envelope ID: F49F7727-26E0-4B0F-8253-A3708F92C285

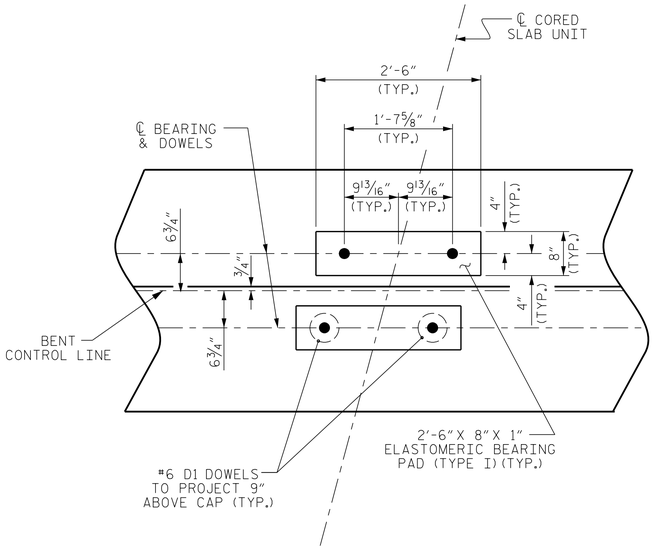

DETAIL "A"

(DIMENSIONS ARE TYPICAL EACH BEARING)

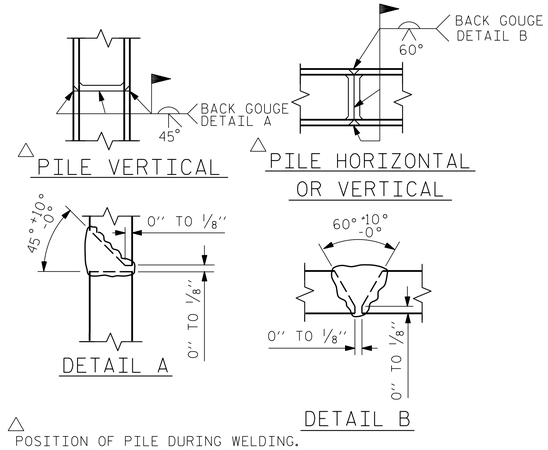

△ POSITION OF PILE DURING WELDING.

PILE SPLICE DETAILS

BAR TYPES

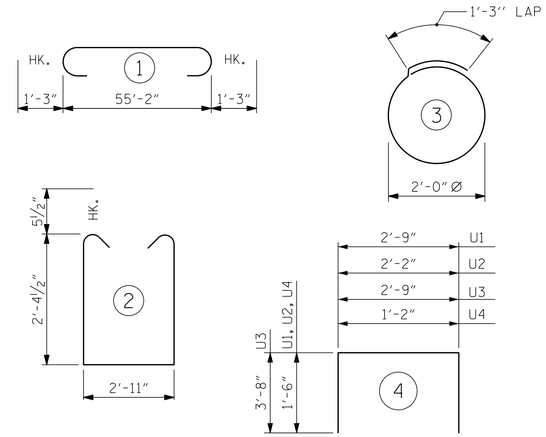

ALL BAR DIMENSIONS ARE OUT TO OUT.

BILL OF MATERIAL

BENT No. 2

BAR	NO.	SIZE	TYPE	LENGTH	WEIGHT
B1	6	#9	1	57'-8"	1176
B2	6	#9	STR	55'-4"	1129
B3	4	#5	STR	55'-4"	231
B4	12	#4	STR	28'-11"	232
B5	15	#4	STR	2'-11"	29
D1	68	#6	STR	1'-6"	153
S1	80	#5	2	8'-7"	716
S2	18	#4	3	7'-7"	91
U1	4	#4	4	5'-9"	15
U2	6	#4	4	5'-2"	21
U3	2	#9	4	10'-1"	69
U4	55	#4	4	4'-2"	153

REINFORCING STEEL 4015 LBS

CLASS A CONCRETE BREAKDOWN

TOTAL CLASS A CONCRETE 19.4 C.Y.

HP 14 X 73 GALVANIZED STEEL PILES

No. 9 639

PILE DRIVING EQUIPMENT SETUP FOR HP 14 X 73 GALVANIZED STEEL PILES

NO: 9

PILE REDRIVES NO: 5

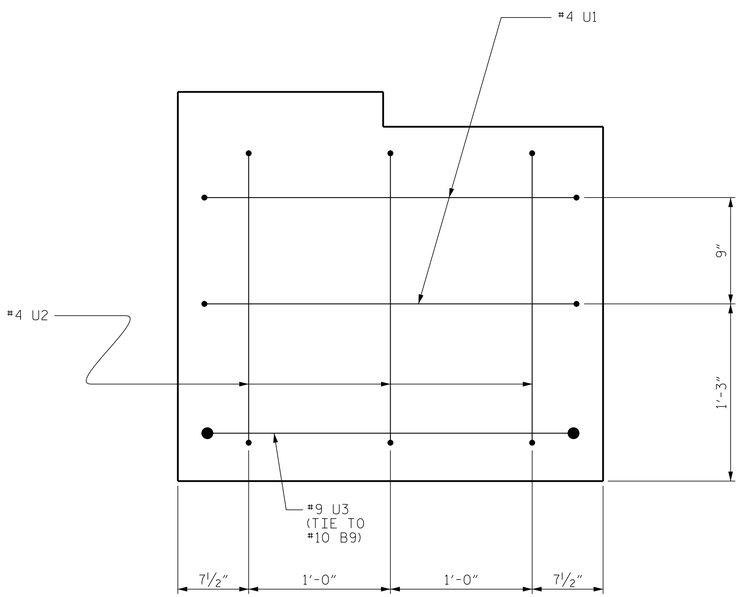

END OF CAP VIEW

(TYPICAL BOTH ENDS)

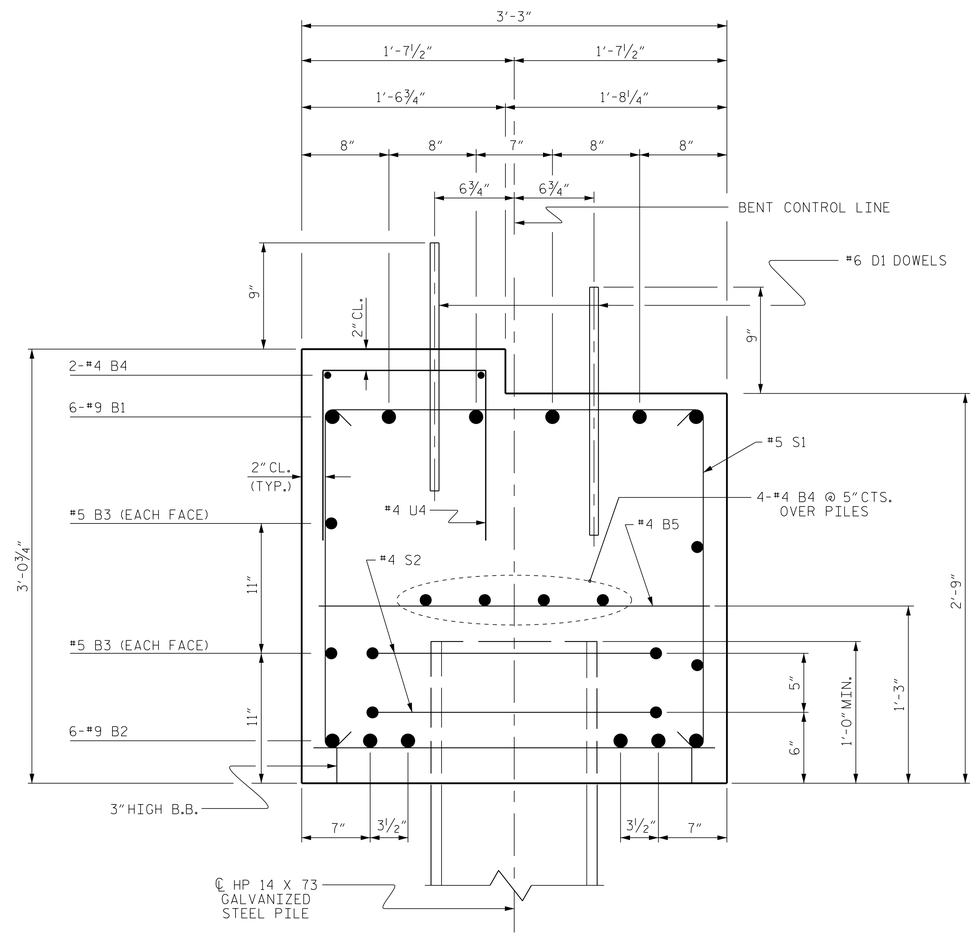

SECTION A-A

PROJECT NO. 17BP.4.R.110

WAYNE COUNTY

STATION: 20+20.00 -LREV.-

SHEET 2 OF 2

ENGINEER OF RECORD

DocuSigned by: Buck Charles Hunt

NORTH CAROLINA PROFESSIONAL SEAL 14091 ENGINEER BUCK CHARLES HUNT

6/24/2019

WETHERILL ENGINEERING

1223 Jones Franklin Rd.
Raleigh, N.C. 27606
Bus: 919 851 8077
Fax: 919 851 8107
LICENSE NO. F-0377

STATE OF NORTH CAROLINA
DEPARTMENT OF TRANSPORTATION
RALEIGH

SUBSTRUCTURE

BENT No. 2

REVISIONS							SHEET NO.
NO.	BY:	DATE:	NO.	BY:	DATE:		S01-19
1			3				TOTAL SHEETS
2			4				24

DRAWN BY : B.C. HUNT DATE : 5-19

CHECKED BY : T.K. KOCH DATE : 5-19

DOCUMENT NOT CONSIDERED FINAL UNLESS ALL SIGNATURES COMPLETED

P:\2019\19103.01_Wayne_12\Structures\DGN\17BP.R.4.110_SMU_BT.dgn
6/24/2019 9:21:54 AM

DocuSign Envelope ID: F49F7727-26E0-4B0F-8253-A3708F92C285

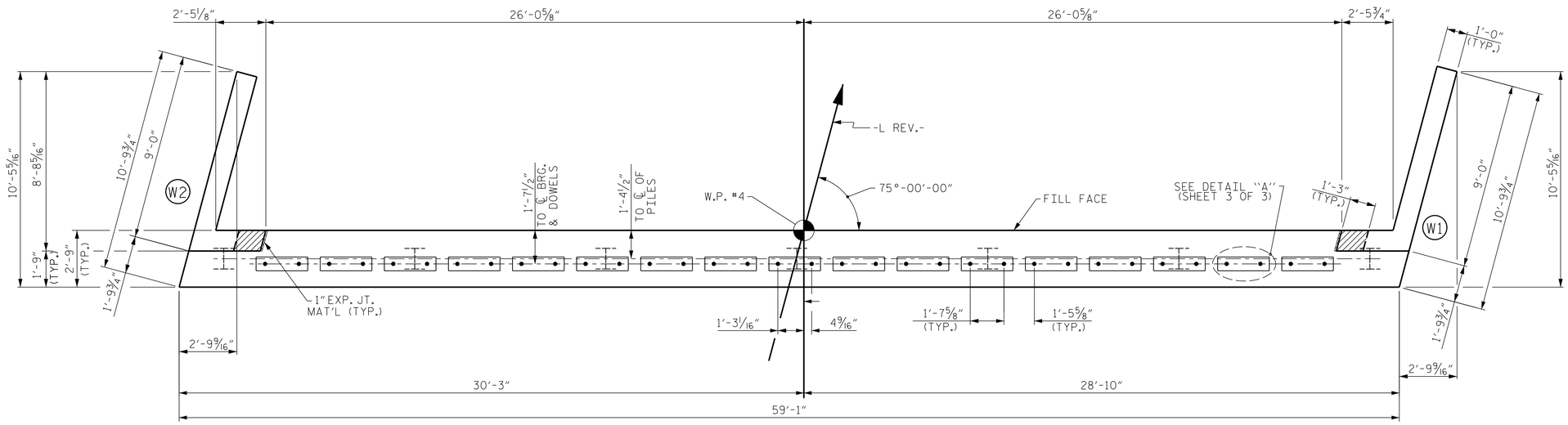

PLAN

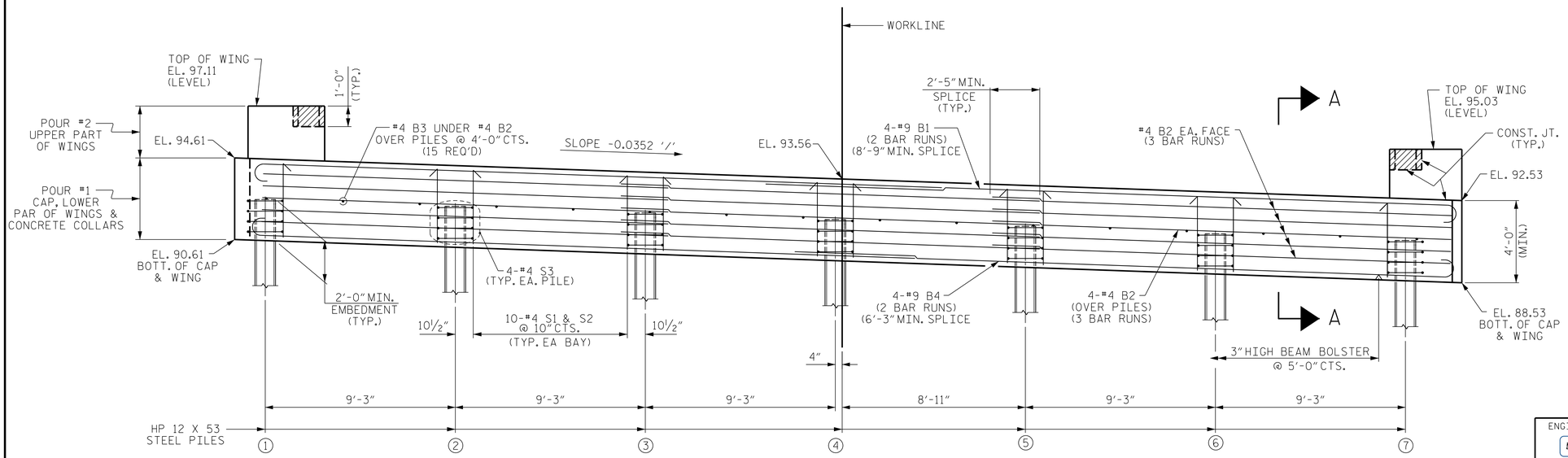

ELEVATION

WINGS NOT SHOWN FOR CLARITY.
FOR SECTION A-A, SEE SHEET 3 OF 3.
CONCRETE COLLARS FOR STEEL PILES NOT SHOWN IN PLAN AND ELEVATION VIEWS FOR CLARITY.
SEE "CORROSION PROTECTION FOR STEEL PILES DETAIL", SHEET 3 OF 3.

NOTES

STIRRUPS IN CAP MAY BE SHIFTED AS NECESSARY TO CLEAR DOWELS.

THE CONCRETE IN THE SHADED AREA OF THE WING SHALL BE POURED AFTER THE VERTICAL CONCRETE BARRIER RAIL IS CAST IF SLIP FORMING IS USED.

FOR PILE SPLICE DETAILS, SEE SHEET 3 OF 3.

FOR WING DETAILS, SEE SHEET 2 OF 3.

TOP OF PILE ELEVATIONS	
1	92.55
2	92.22
3	91.90
4	91.57
5	91.25
6	90.92
7	90.59

PROJECT NO. 17BP.4.R.110
WAYNE COUNTY
STATION: 20+20.00 -LREV.-

SHEET 1 OF 3

ENGINEER OF RECORD
Docusigned by: Buck Charles Hunt
NORTH CAROLINA PROFESSIONAL SEAL 14091 ENGINEER BUCK CHARLES HUNT
6/24/2019

WETHERILL ENGINEERING
1223 Jones Franklin Rd.
Raleigh, N.C. 27606
Bus: 919 851 8077
Fax: 919 851 8107
LICENSE NO. F-0377

STATE OF NORTH CAROLINA
DEPARTMENT OF TRANSPORTATION
RALEIGH

SUBSTRUCTURE
END BENT No. 2

REVISIONS							SHEET NO.
NO.	BY:	DATE:	NO.	BY:	DATE:		S01-20
1			3				TOTAL SHEETS
2			4				24

DRAWN BY : B.C. HUNT DATE : 5-19
CHECKED BY : T.K. KOCH DATE : 5-19

DOCUMENT NOT CONSIDERED FINAL UNLESS ALL SIGNATURES COMPLETED

P:\2019\19103.01_Wayne_12\Structures\DGN\17BP.R.4.110_SMU_EBT.dgn
6/24/2019 9:22:12 AM

DocuSign Envelope ID: F49F7727-26E0-4B0F-8253-A3708F92C285

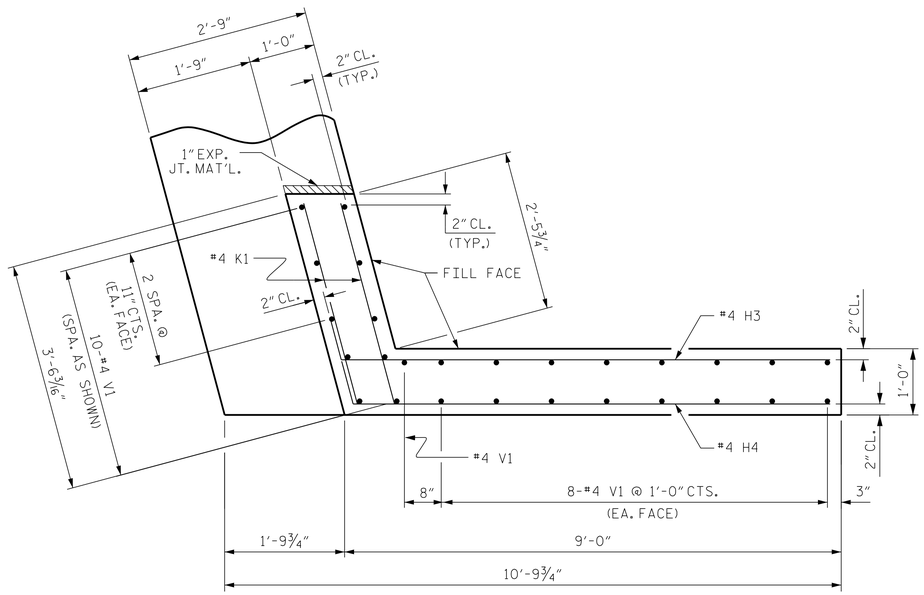

PLAN OF WING (W1)

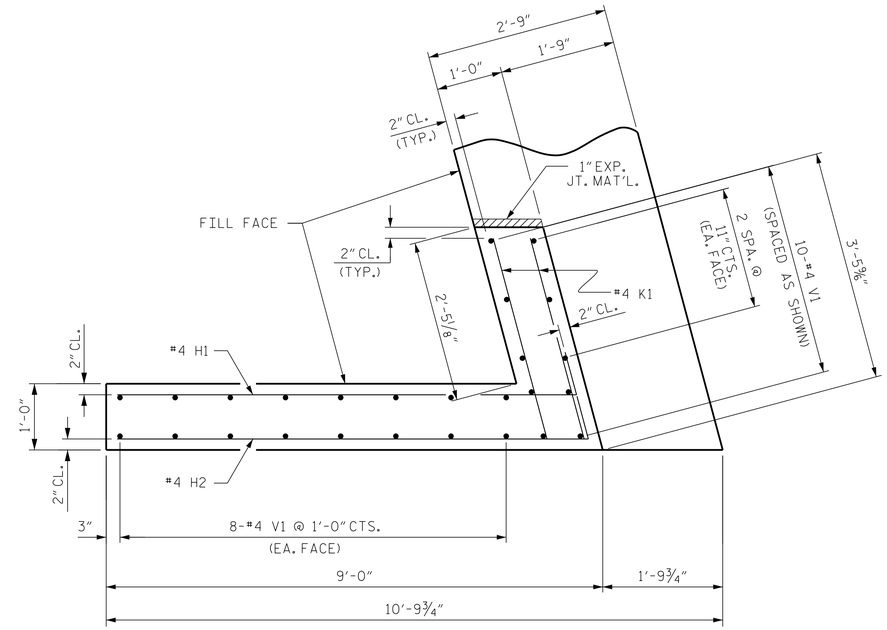

PLAN OF WING (W2)

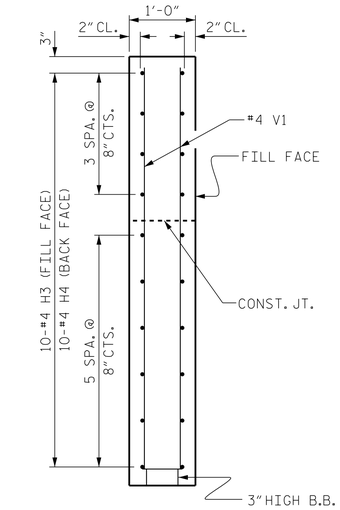

SECTION X-X

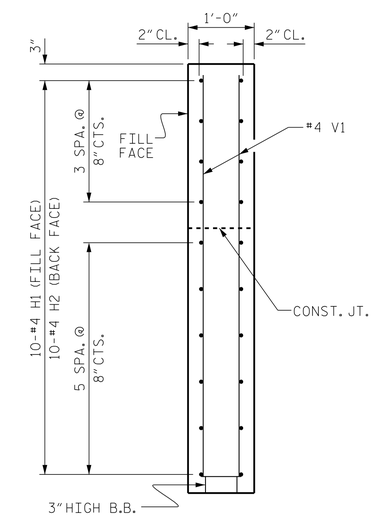

SECTION Y-Y

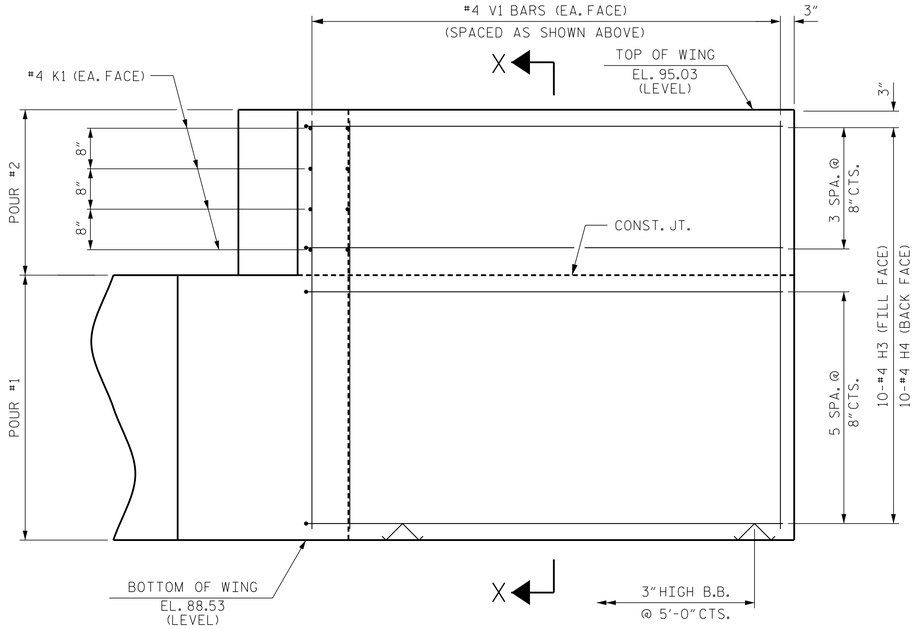

ELEVATION OF WING (W1)

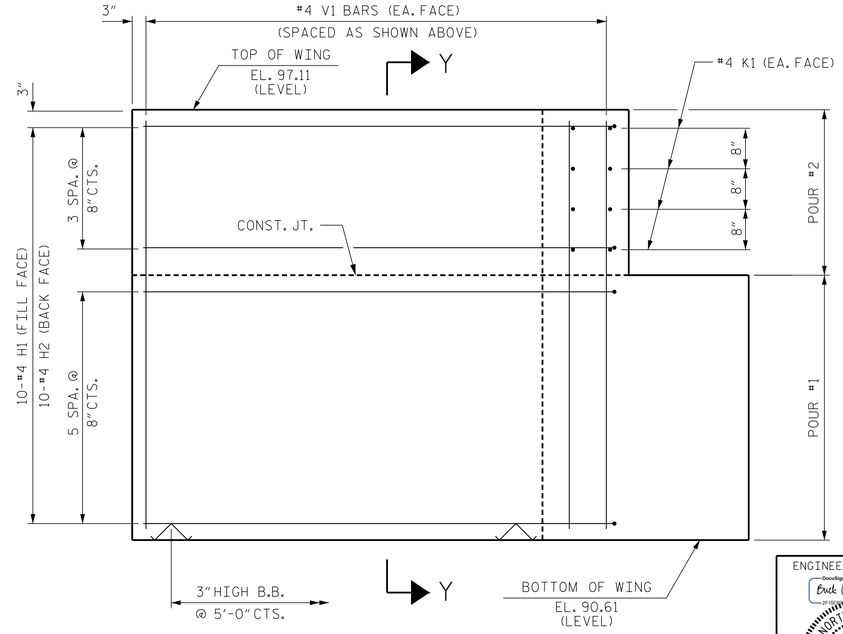

ELEVATION OF WING (W2)

WING DETAILS

PROJECT NO. 17BP.4.R.110

WAYNE COUNTY

STATION: 20+20.00 -LREV.-

SHEET 2 OF 3

ENGINEER OF RECORD

DocuSigned by: Buck Charles Hunt

NORTH CAROLINA PROFESSIONAL SEAL 14091 ENGINEER BUCK CHARLES HUNT

6/24/2019

WETHERILL ENGINEERING

1223 Jones Franklin Rd.
Raleigh, N.C. 27606
Bus: 919 851 8077
Fax: 919 851 8107
LICENSE NO. F-0377

STATE OF NORTH CAROLINA
DEPARTMENT OF TRANSPORTATION
RALEIGH

SUBSTRUCTURE
END BENT No. 2

REVISIONS								SHEET NO.
NO.	BY:	DATE:	NO.	BY:	DATE:			S01-21
1			3					TOTAL SHEETS
2			4					24

DRAWN BY : B.C. HUNT DATE : 5-19
CHECKED BY : T.K. KOCH DATE : 5-19

DOCUMENT NOT CONSIDERED FINAL UNLESS ALL SIGNATURES COMPLETED

P:\2019\19103.01_Wayne_12\Structures\DGN\17BP.R.4.110_SW0_EBT.dgn
6/24/2019 9:22:32 AM

DocuSign Envelope ID: F49F7727-26E0-4B0F-8253-A3708F92C285

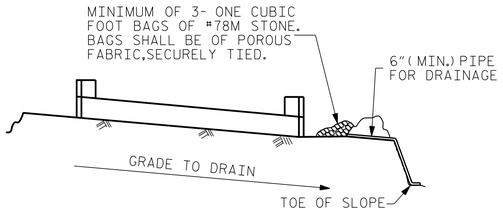

BAGGED STONE AND PIPE SHALL BE PLACED IMMEDIATELY AFTER COMPLETION OF END BENT EXCAVATION. PIPE MAY BE EITHER CONCRETE, CORRUGATED STEEL, CORRUGATED ALUMINUM ALLOY, OR CORRUGATED PLASTIC. PERFORATED PIPE WILL NOT BE ALLOWED.

BAGGED STONE SHALL REMAIN IN PLACE UNTIL THE ENGINEER DIRECTS THAT IT BE REMOVED. THE CONTRACTOR SHALL REMOVE AND DISPOSE OF SILT ACCUMULATIONS AT BAGGED STONE WHEN SO DIRECTED BY THE ENGINEER. BAGS SHALL BE REMOVED AND REPLACED WHENEVER THE ENGINEER DETERMINES THAT THEY HAVE DETERIORATED AND LOST THEIR EFFECTIVENESS.

NO SEPARATE PAYMENT WILL BE MADE FOR THIS WORK AND THE ENTIRE COST OF THIS WORK SHALL BE INCLUDED IN THE UNIT CONTRACT PRICE BID FOR THE SEVERAL PAY ITEMS.

TEMPORARY DRAINAGE AT END BENT

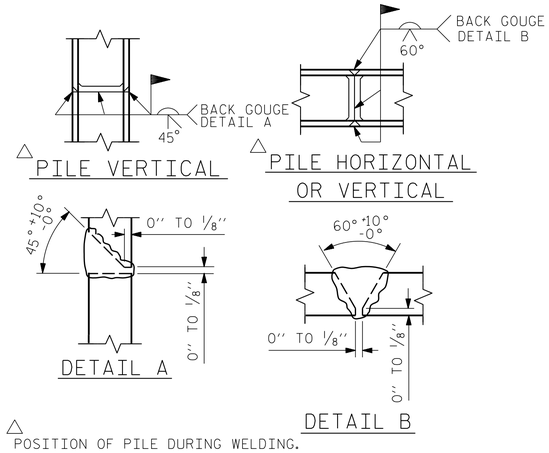

△ POSITION OF PILE DURING WELDING.

PILE SPLICE DETAILS

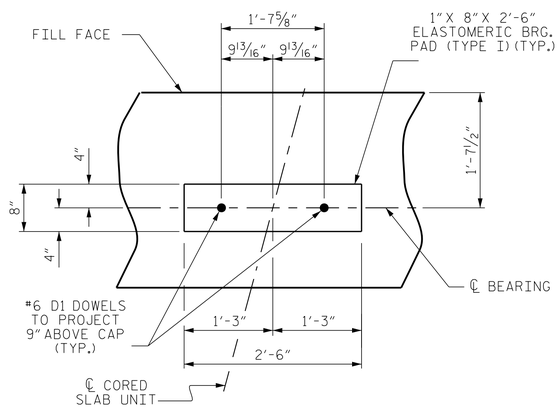

DETAIL "A"

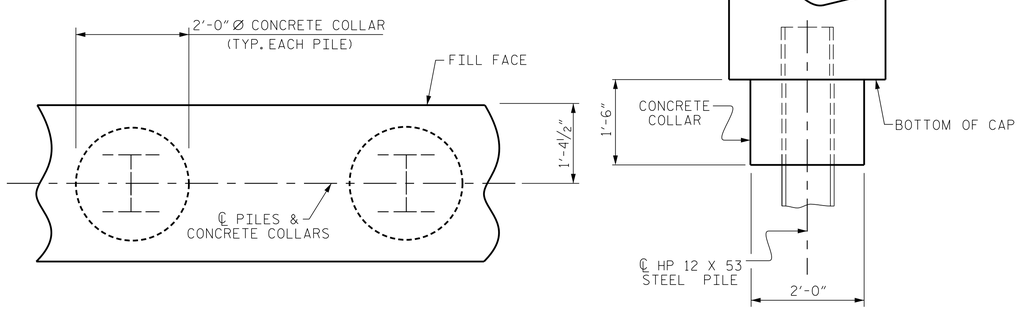

PLAN

ELEVATION

CORROSION PROTECTION FOR STEEL PILES DETAIL

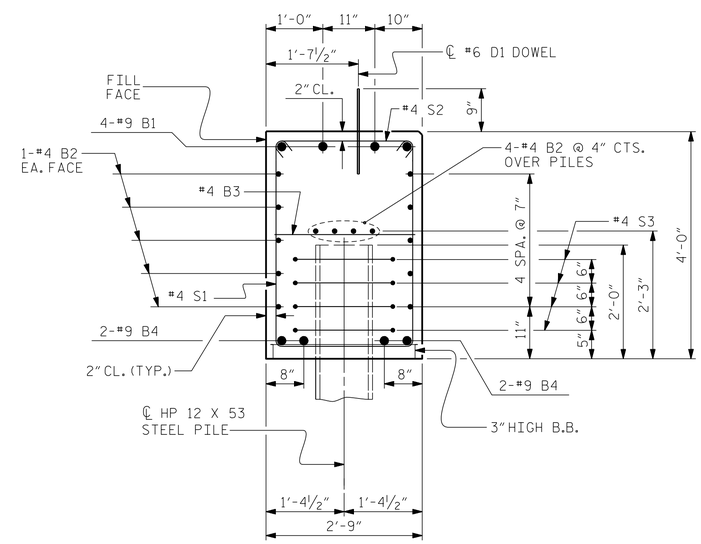

SECTION A-A

(CONCRETE COLLAR NOT SHOWN FOR CLARITY. SEE "CORROSION PROTECTION FOR STEEL PILES DETAIL.")

BAR TYPES

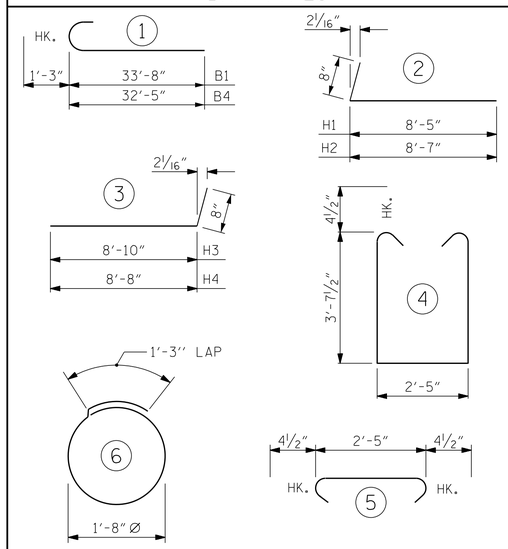

ALL BAR DIMENSIONS ARE OUT TO OUT.

BILL OF MATERIAL

END BENT No. 2

BAR	NO.	SIZE	TYPE	LENGTH	WEIGHT
B1	8	#9	1	34'-11"	950
B2	42	#4	STR	21'-3"	596
B3	15	#4	STR	2'-5"	24
B4	8	#9	1	33'-8"	916
D1	34	#6	STR	1'-6"	77
H1	10	#4	2	9'-1"	61
H2	10	#4	2	9'-3"	62
H3	10	#4	3	9'-6"	63
H4	10	#4	3	9'-4"	62
K1	16	#4	STR	3'-2"	34
S1	60	#4	4	10'-5"	418
S2	60	#4	5	3'-2"	127
S3	28	#4	6	6'-6"	122
V1	53	#4	STR	6'-2"	218

REINFORCING STEEL (FOR ONE END BENT) 3730 LBS.

CLASS A CONCRETE BREAKDOWN

POUR #1 CAP, LOWER PART OF WINGS & COLLARS 27.7 C.Y.

POUR #2 UPPER PART OF WINGS 2.1 C.Y.

TOTAL CLASS A CONCRETE 29.8 C.Y.

HP 12 X 53 STEEL PILES
NO: 7 LIN. FT.= 364

PILE DRIVING EQUIPMENT SETUP FOR HP 12 X 53 STEEL PILES NO: 7

PILE REDRIVES NO: 4

PROJECT NO. 17BP.4.R.110
WAYNE COUNTY
STATION: 20+20.00 -LREV.-

SHEET 3 OF 3

ENGINEER OF RECORD
DocuSigned by: Buck Charles Hunt
NORTH CAROLINA PROFESSIONAL SEAL 14091 ENGINEER BUCK CHARLES HUNT
6/24/2019

WETHERILL ENGINEERING
1223 Jones Franklin Rd.
Raleigh, N.C. 27606
Bus: 919 851 8077
Fax: 919 851 8107
LICENSE NO. F-0377

STATE OF NORTH CAROLINA
DEPARTMENT OF TRANSPORTATION
RALEIGH

SUBSTRUCTURE
END BENT No. 2

REVISIONS						SHEET NO.
NO.	BY:	DATE:	NO.	BY:	DATE:	S01-22
1			3			TOTAL SHEETS
2			4			24

DRAWN BY : B.C. HUNT DATE : 5-19
CHECKED BY : T.K. KOCH DATE : 5-19

DOCUMENT NOT CONSIDERED FINAL UNLESS ALL SIGNATURES COMPLETED

P:\2019\19103\01_Wayne_12\Structures\DGN\17BP.R.4.110_SMU_EBT.dgn
6/24/2019 9:23:00 AM

DocuSign Envelope ID: F49F7727-26E0-4B0F-8253-A3708F92C285

ESTIMATED QUANTITIES		
BRIDGE @ STA. 20+20.00 -LREV-	RIP RAP CLASS II (2'-0" THICK)	GEOTEXTILE FOR DRAINAGE
	TONS	SQUARE YARDS
END BENT 1	385	428
END BENT 2	378	420

NOTE: STREAM BANK STABILIZATION AND RIP RAP AT EMBANKMENT QUANTITIES ARE INCLUDED IN THE END BENT QUANTITIES.

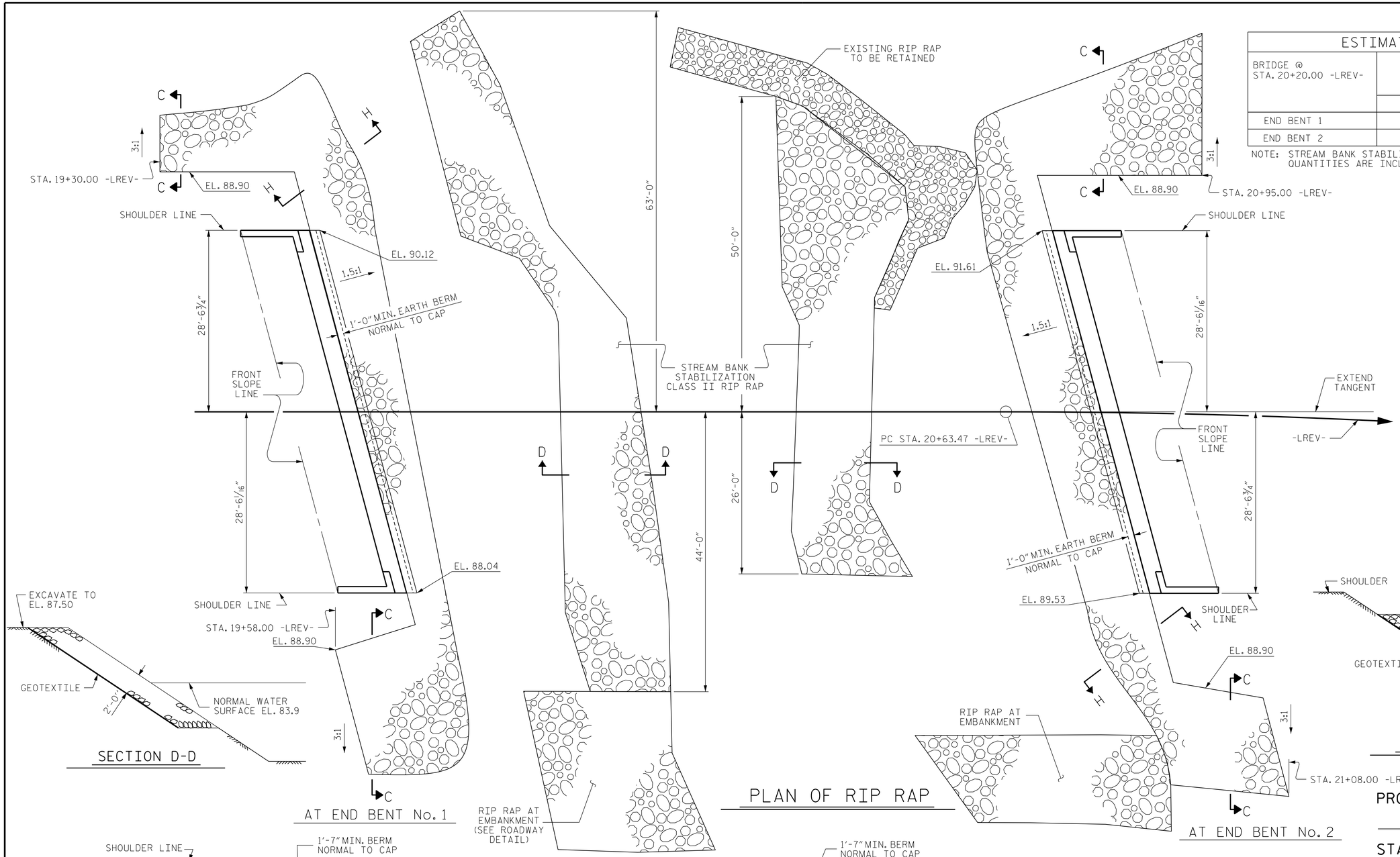

SECTION D-D

AT END BENT No. 1

PLAN OF RIP RAP

AT END BENT No. 2

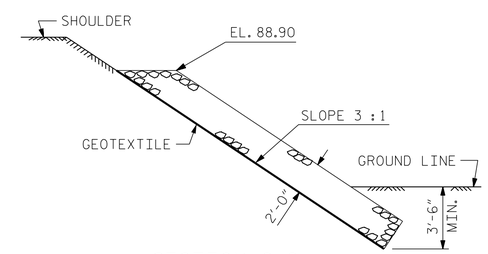

SECTION C-C

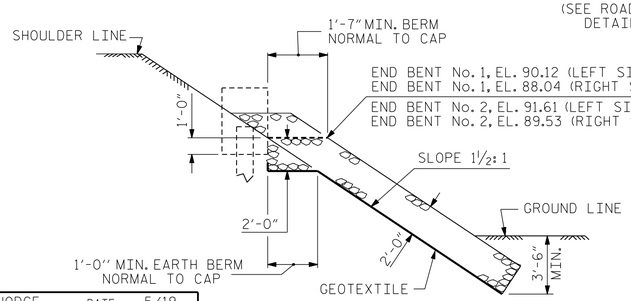

SECTION H-H

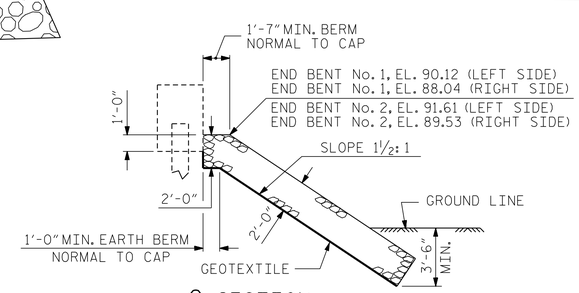

℄ SECTION

BERM RIP RAPPED

PROJECT NO. 17BP.4.R.110

WAYNE COUNTY

STATION: 20+20.00 -LREV.-

ASSEMBLED BY : D. HODGE	DATE : 5/19		
CHECKED BY : J.A. DILWORTH	DATE : 5/19		
DRAWN BY : REK 1/84	REV. 10/1/11	MAA/GM	
CHECKED BY : RDU 1/84	REV. 12/21/11	MAA/GM	
	REV. 12/17	MAA/THC	

DOCUMENT NOT CONSIDERED FINAL UNLESS ALL SIGNATURES COMPLETED

ENGINEER OF RECORD

Docusigned by: Buck Charles Hunt

NORTH CAROLINA PROFESSIONAL SEAL 14091 ENGINEER BUCK CHARLES HUNT

6/24/2019

WETHERILL ENGINEERING

1223 Jones Franklin Rd.
Raleigh, N.C. 27606
Bus: 919 851 8077
Fax: 919 851 8107
LICENSE NO. F-0377

STATE OF NORTH CAROLINA
DEPARTMENT OF TRANSPORTATION
RALEIGH

STANDARD

RIP RAP DETAILS

REVISIONS						SHEET NO.
NO.	BY:	DATE:	NO.	BY:	DATE:	S01-23
1			3			TOTAL SHEETS
2			4			24

STD. NO. RR1

P:\2019\19103.01_Wayne_121\Structures\DGN\17BP.R.4.110_SMU_RR.dgn
6/24/2019 9:24:24 AM

DocuSign Envelope ID: F49F7727-26E0-4B0F-8253-A3708F92C285

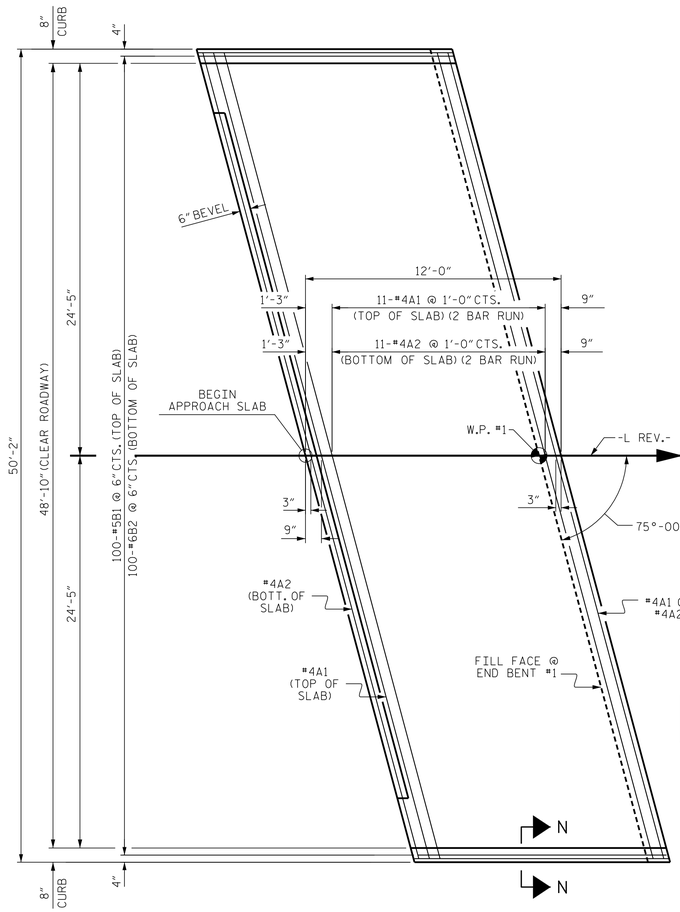

PLAN @ END BENT #1

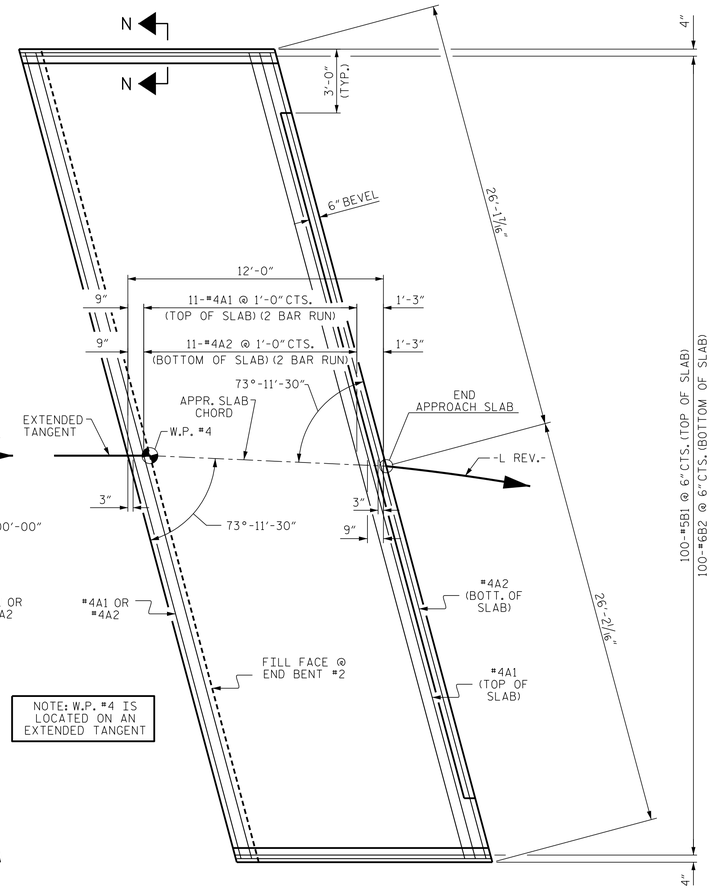

NOTE: W.P. #4 IS LOCATED ON AN EXTENDED TANGENT

PLAN @ END BENT #2

DIMENSIONS SHOWN ARE TYPICAL FOR BOTH APPROACH SLABS UNLESS OTHERWISE NOTED

BILL OF MATERIAL

APPROACH SLAB AT EB #1

BAR	NO.	SIZE	TYPE	LENGTH	WEIGHT
* A1	26	#4	STR	27'-0"	469
A2	26	#4	STR	26'-11"	467
* B1	100	#5	STR	11'-1"	1156
B2	100	#6	STR	11'-7"	1740
REINFORCING STEEL				LBS.	2207
* EPOXY COATED REINFORCING STEEL				LBS.	1625
CLASS AA CONCRETE				C.Y.	28.7

APPROACH SLAB AT EB #2

BAR	NO.	SIZE	TYPE	LENGTH	WEIGHT
* A1	26	#4	STR	27'-0"	469
A2	26	#4	STR	26'-11"	467
* B1	100	#5	STR	11'-1"	1156
B2	100	#6	STR	11'-7"	1740
REINFORCING STEEL				LBS.	2207
* EPOXY COATED REINFORCING STEEL				LBS.	1625
CLASS AA CONCRETE				C.Y.	28.7

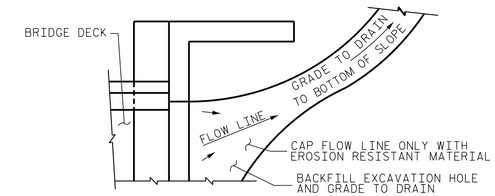

NOTE: IF THE APPROACH SLAB IS NOT CONSTRUCTED IMMEDIATELY AFTER THE BACKFILLING OF THE END BENT EXCAVATION, GRADE TO DRAIN TO THE BOTTOM OF THE SLOPE AND PROVIDE EROSION RESISTANT MATERIAL, SUCH AS FIBERGLASS ROVING OR AS DIRECTED BY THE ENGINEER TO PREVENT SOIL EROSION AND TO PROTECT THE AREA ADJACENT TO THE STRUCTURE. THE CONTRACTOR WILL BE REQUIRED TO REMOVE THESE MATERIALS PRIOR TO CONSTRUCTION OF THE APPROACH SLAB.

TEMPORARY DRAINAGE DETAIL

SPLICE LENGTHS

BAR SIZE	EPOXY COATED	UNCOATED
#4	2'-0"	1'-9"
#5	2'-6"	2'-2"
#6	3'-10"	2'-7"

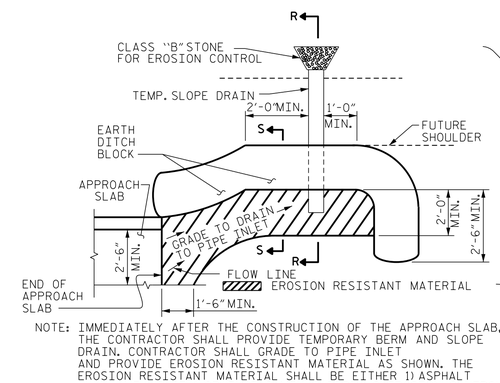

NOTE: IMMEDIATELY AFTER THE CONSTRUCTION OF THE APPROACH SLAB, THE CONTRACTOR SHALL PROVIDE TEMPORARY BERM AND SLOPE DRAIN. CONTRACTOR SHALL GRADE TO PIPE INLET AND PROVIDE EROSION RESISTANT MATERIAL AS SHOWN. THE EROSION RESISTANT MATERIAL SHALL BE EITHER 1) ASPHALT PLANT MIX, TYPE 1 OR TYPE 2, MIN. 2" DEPTH, 2) EROSION CONTROL MAT, OR 3) CONCRETE, AS DIRECTED BY THE ENGINEER. THE SLOPE DRAIN SHALL CONSIST OF A NON-PERFORATED TEMPORARY DRAINAGE PIPE, 12 INCHES IN DIAMETER.

PLAN VIEW

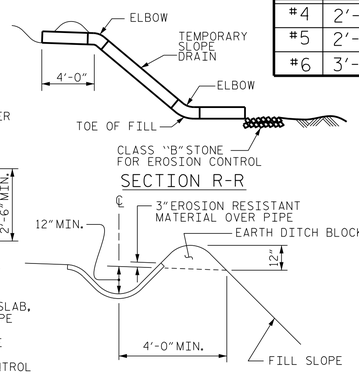

SECTION S-S

TEMPORARY BERM AND SLOPE DRAIN DETAILS

(TO BE USED WHEN SHOULDER BERM GUTTER IS REQUIRED)

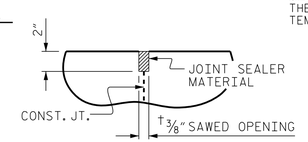

DETAIL "A"

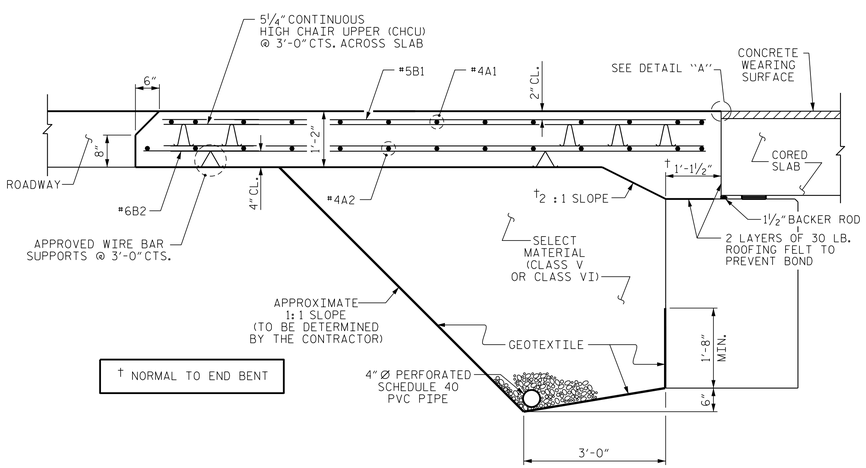

† NORMAL TO END BENT

SECTION THRU SLAB

(TYPE II - MODIFIED APPROACH FILL)

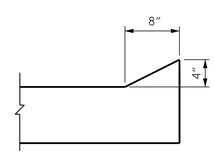

SECTION N-N

CURB DETAILS

NOTES

FOR BRIDGE APPROACH FILL INCLUDING GEOTEXTILE, 4" Ø DRAINAGE PIPE, AND SELECT MATERIAL BACKFILL, SEE ROADWAY PLANS.

GEOTEXTILE SHALL BE TYPE 1 IN ACCORDANCE WITH THE STANDARD SPECIFICATIONS SECTION 1056.

SELECT MATERIAL BACKFILL (CLASS V OR CLASS VI) SHALL BE IN ACCORDANCE WITH STANDARD SPECIFICATIONS SECTION 1016.

SELECT MATERIAL BACKFILL IS TO BE CONTINUOUS ALONG FILL FACE OF BACKWALL FROM OUTSIDE EDGE TO OUTSIDE EDGE OF APPROACH SLAB.

FOR THE 4" Ø DRAINAGE PIPE OUTLET(S), SEE ROADWAY STANDARD DRAWINGS.

AREA BETWEEN THE WINGWALL AND APPROACH SLAB SHALL BE GRADED TO DRAIN THE WATER AWAY FROM THE FILL FACE OF THE BRIDGE AND SHALL BE PAVED. SEE ROADWAY PLANS.

APPROACH SLAB GROOVING IS REQUIRED.

APPROACH SLABS SHALL BE POURED AFTER CONCRETE WEARING SURFACE IS POURED.

THE JOINT OPENING AT THE APPROACH SLAB/DECK INTERFACE SHALL BE SAWED NO MORE THAN 12 HOURS AFTER THE APPROACH SLAB IS CAST. THE JOINT SHALL BE CLEANED OF ALL DEBRIS BEFORE THE SEALANT IS APPLIED. THE JOINT SEALER MATERIAL SHALL CONFORM TO THE REQUIREMENTS OF SECTION 1028-3 OF THE STANDARD SPECIFICATIONS.

PROJECT NO. 17BP.4.R.110
WAYNE COUNTY
STATION: 20+20.00 -LREV.-

ENGINEER OF RECORD
DocuSigned by: Buck Charles Hunt
NORTH CAROLINA PROFESSIONAL SEAL 14091 ENGINEER BUCK CHARLES HUNT
6/24/2019

WETHERILL ENGINEERING
1223 Jones Franklin Rd.
Raleigh, N.C. 27606
Bus: 919 851 8077
Fax: 919 851 8107
LICENSE NO. F-0377

STATE OF NORTH CAROLINA
DEPARTMENT OF TRANSPORTATION
RALEIGH

STANDARD BRIDGE APPROACH SLAB FOR PRESTRESSED CONCRETE CORED SLAB UNIT (SUB-REGIONAL TIER) 75° SKEW

REVISIONS						SHEET NO.
NO.	BY:	DATE:	NO.	BY:	DATE:	S01-24
1			3			TOTAL SHEETS
2			4			24

DRAWN BY : B.C. HUNT DATE : 5-19
CHECKED BY : T.K. KOCH DATE : 5-19

DOCUMENT NOT CONSIDERED FINAL UNLESS ALL SIGNATURES COMPLETED

P:\2019\19103.01_Wayne_12\Structures\DGN\17BP.R.4.110_SMU_AS.dgn
6/24/2019 9:25:05 AM