DocuSign Envelope ID: 3B4C852E-16C7-44ED-9A9A-FCEF0D499747

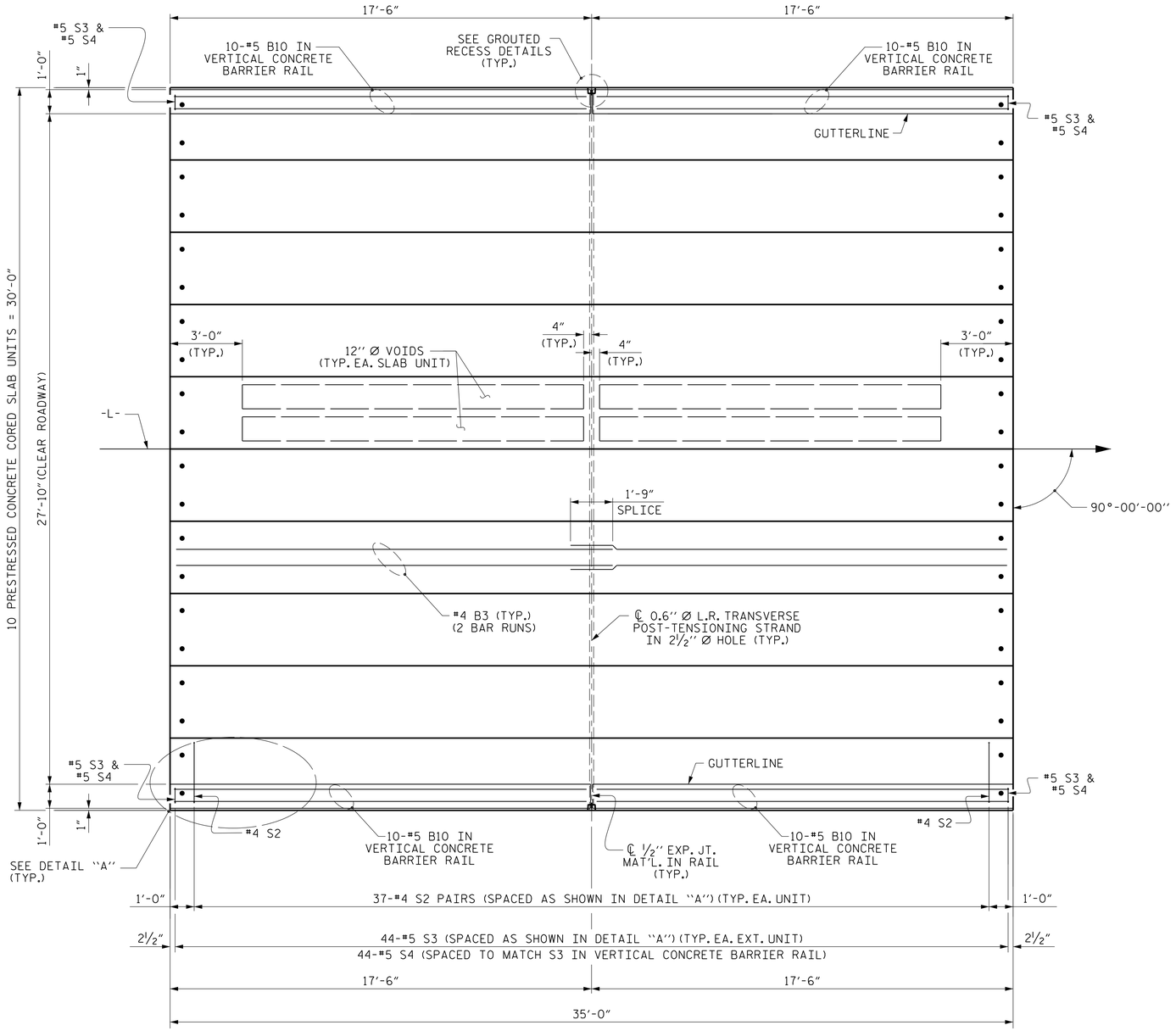

PLAN OF UNIT

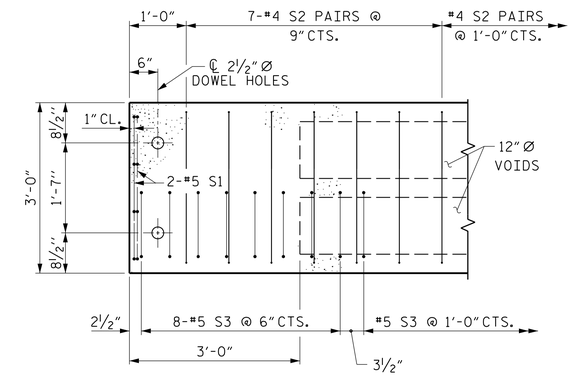

DETAIL "A"

(TYPICAL EACH END OF UNIT)
NOTE: EXTERIOR UNIT SHOWN - INTERIOR UNIT SIMILAR EXCEPT OMIT #5 S3 BARS.

PROJECT NO. 17BP.4.R.68

NASH COUNTY

STATION: 13+26.50 -L-

SHEET 3 OF 5

STATE OF NORTH CAROLINA
DEPARTMENT OF TRANSPORTATION
RALEIGH

PLAN OF 35' UNIT 27'-10" CLEAR ROADWAY 90° SKEW

DOCUMENT NOT CONSIDERED FINAL UNLESS ALL SIGNATURES COMPLETED

THIS STANDARD DRAWING REVIEWED & ADOPTED FOR USE AT THE REFERENCED LOCATION BY THE UNDERSIGNED:

NORTH CAROLINA PROFESSIONAL SEAL ENGINEER L. KEVIN AUSTIN 19061
Digitally signed by L. Kevin Austin
22F7B372C2EA4BB...
6/1/2016

PLANS PREPARED BY:
CALYX ENGINEERS + CONSULTANTS
6750 TRYON ROAD
CARY, NC 27518
phone: 919.851.1912
CALYXengineers.com
NC License # F-1333

REVISIONS							SHEET NO.
NO.	BY:	DATE:	NO.	BY:	DATE:		S-7
1			3				TOTAL SHEETS
2			4				19

ASSEMBLED BY : W. B. ALLEN		DATE : 2/16	
CHECKED BY : W. A. DAVIS		DATE : 3/16	
DRAWN BY : DGE 3/09	REV. 12/5/11	MAA/AAC	
CHECKED BY : BCH 3/09	REV. 8/14	MAA/TMG	

5/12/2016 7:49:19 AM R:\Structures\17BP.4.R.68_SMU_CS_03.dgn

STD. NO. 21"PCS_30_90S_35L