DocuSign Envelope ID: 3B4C852E-16C7-44ED-9A9A-FCEF0D499747

NOTES

STIRRUPS IN CAP MAY BE SHIFTED AS NECESSARY TO CLEAR DOWELS.

★ INVERT ALTERNATE STIRRUPS.

GALVANIZE THE FULL LENGTH OF EACH INTERIOR BENT PILE IN ACCORDANCE WITH SECTION 1076 OF THE STANDARD SPECIFICATIONS.

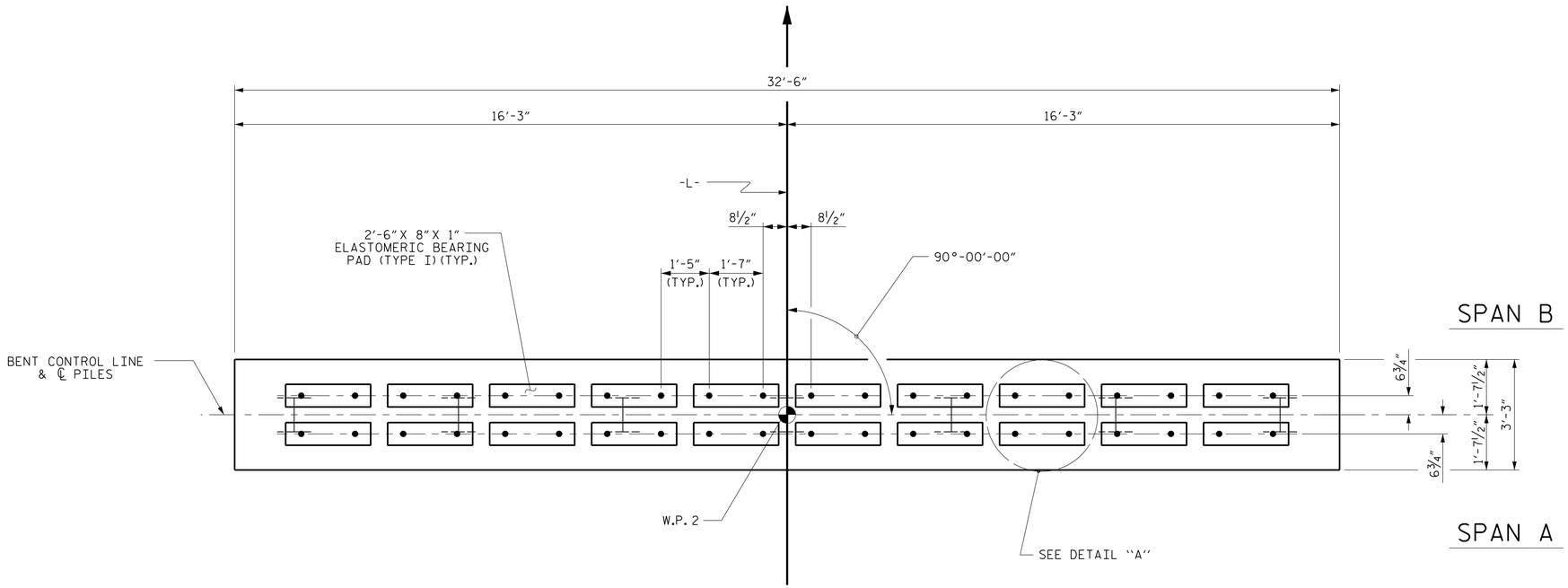

PLAN

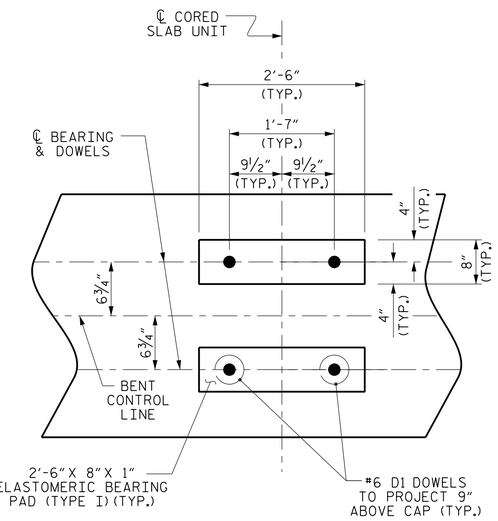

DETAIL "A"

(DIMENSIONS ARE TYPICAL EACH BEARING)

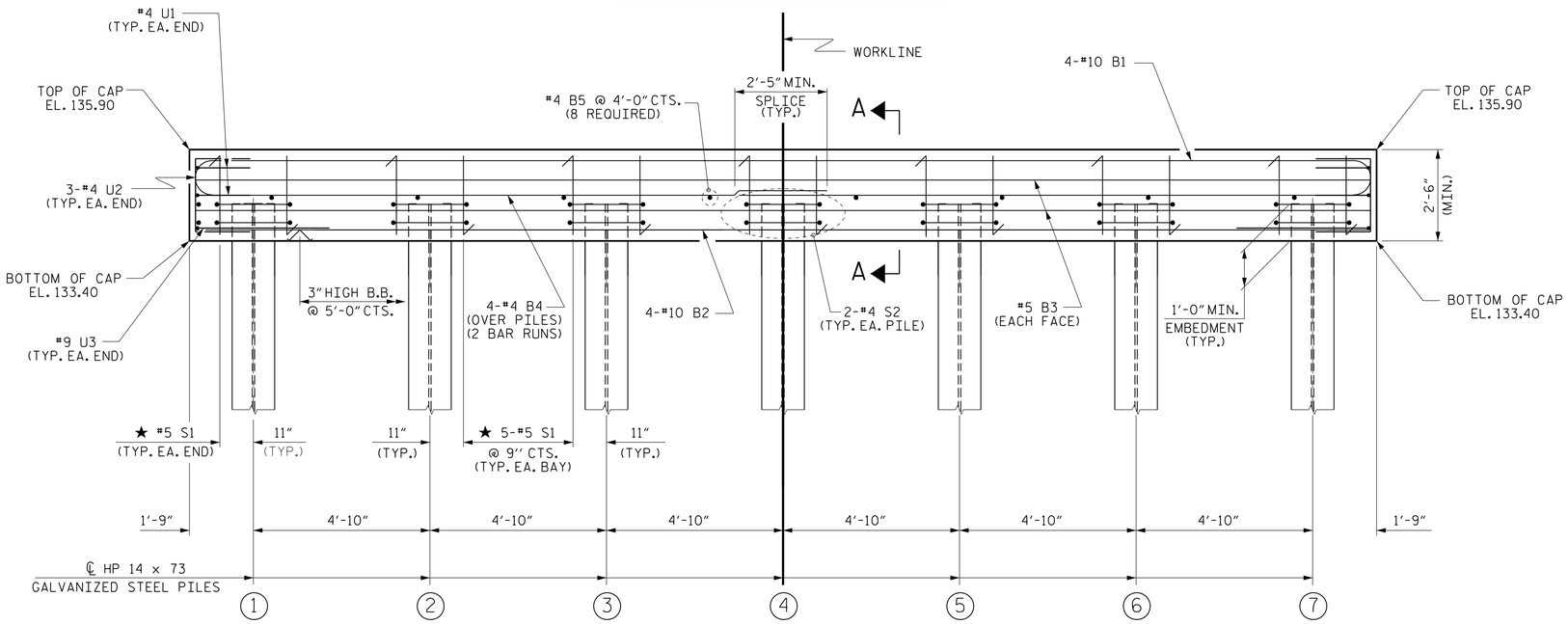

ELEVATION

FOR SECTION A-A, SEE SHEET 2 OF 2

PROJECT NO. 17BP.4.R.68

NASH COUNTY

STATION: 13+26.50 -L-

SHEET 1 OF 2

STATE OF NORTH CAROLINA
DEPARTMENT OF TRANSPORTATION
RALEIGH

SUBSTRUCTURE

BENT No. 1

REVISIONS						SHEET NO.
NO.	BY:	DATE:	NO.	BY:	DATE:	S-15
1			3			TOTAL SHEETS
2			4			19

DOCUMENT NOT CONSIDERED FINAL UNLESS ALL SIGNATURES COMPLETED

THIS STANDARD DRAWING REVIEWED & ADOPTED FOR USE AT THE REFERENCED LOCATION BY THE UNDERSIGNED:

NORTH CAROLINA PROFESSIONAL SEAL ENGINEER L. KEVIN AUSTIN 19661 — Digitally signed by L. Kevin Austin — 6/1/2016

PLANS PREPARED BY:

CALYX ENGINEERS + CONSULTANTS
6750 TRYON ROAD
CARY, NC 27518
phone: 919.851.1912
CALYXengineers.com
NC License # F-1333

ASSEMBLED BY :	W. B. ALLEN	DATE :	3/16
CHECKED BY :	W. A. DAVIS	DATE :	4/16
DRAWN BY :	DGE	05/10	
CHECKED BY :	MKT	05/10	

5/12/2016 7:43:33 AM R:\Structures\17BP.4.R.68_SMU_B1_01.dgn

STD. NO. 14" HP_BT_30_90S_<60'