DocuSign Envelope ID: 3B4C852E-16C7-44ED-9A9A-FCEF0D499747

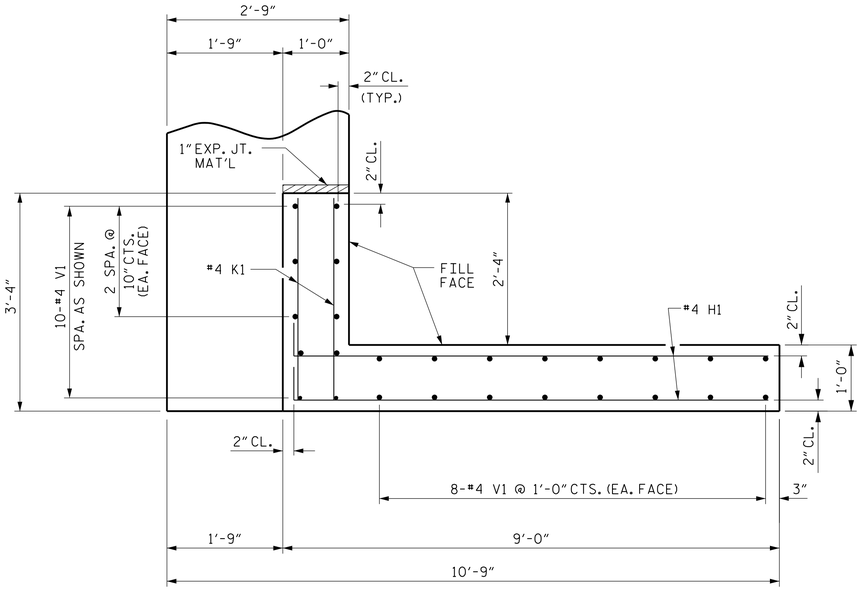

PLAN OF WING (W1)

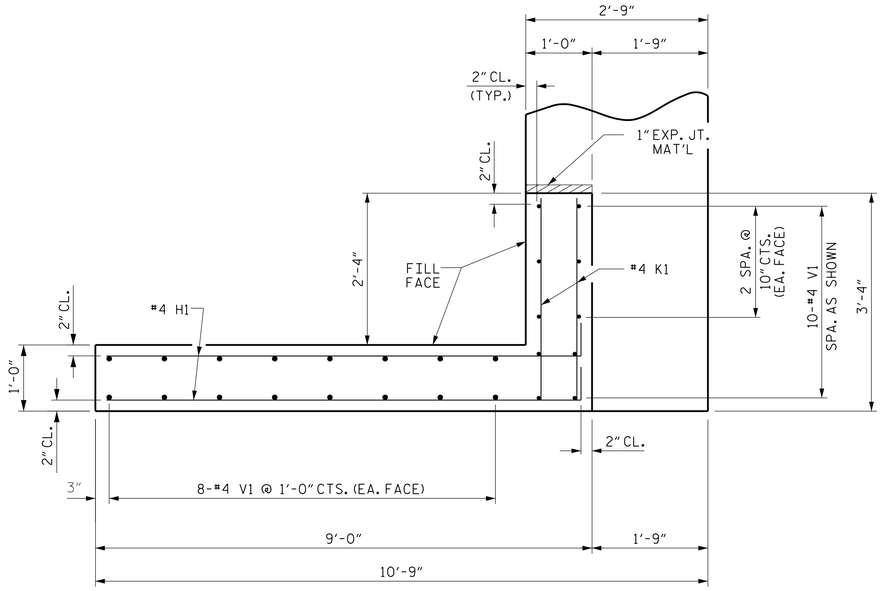

PLAN OF WING (W2)

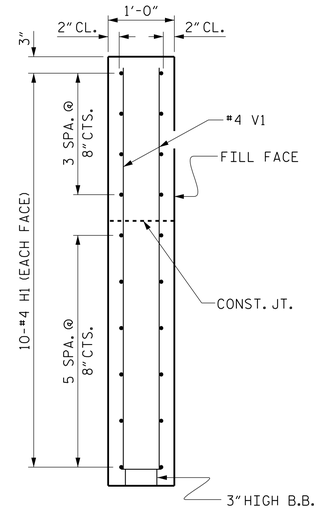

SECTION X-X

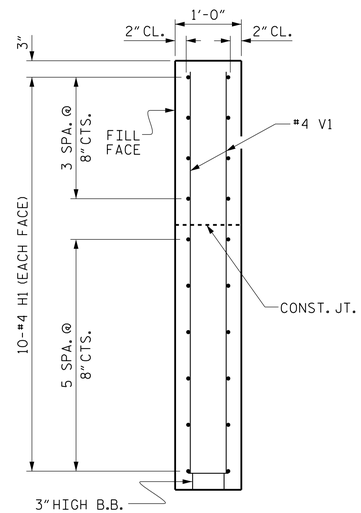

SECTION Y-Y

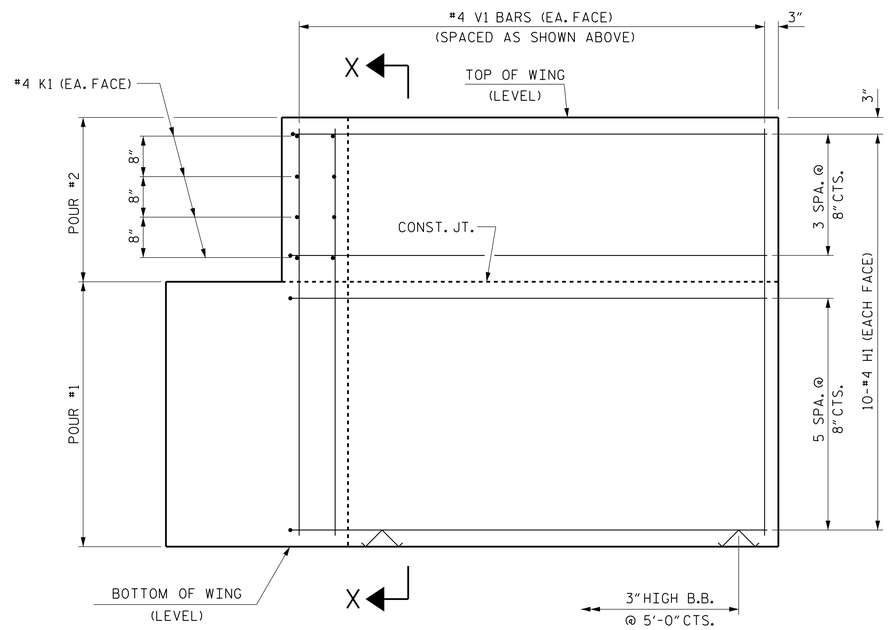

ELEVATION OF WING (W1)

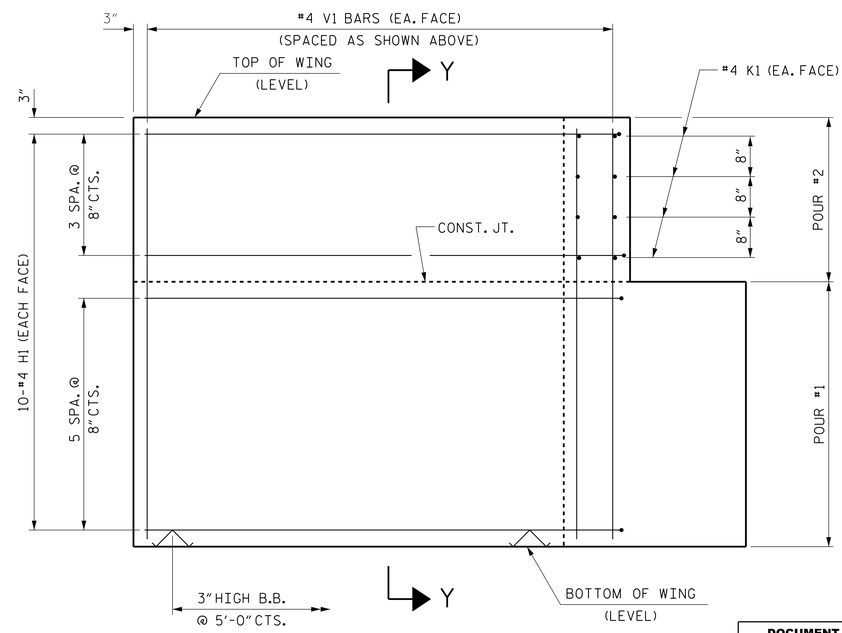

ELEVATION OF WING (W2)

WING DETAILS

PROJECT NO. 17BP.4.R.68

NASH COUNTY

STATION: 13+26.50 -L-

SHEET 3 OF 4

DOCUMENT NOT CONSIDERED FINAL UNLESS ALL SIGNATURES COMPLETED

THIS STANDARD DRAWING REVIEWED & ADOPTED FOR USE AT THE REFERENCED LOCATION BY THE UNDERSIGNED:

NORTH CAROLINA PROFESSIONAL SEAL 19661 ENGINEER L. KEVIN AUSTIN

Docu Signed by: L. Kevin Austin 72F7B372B0A4BB...

6/1/2016

PLANS PREPARED BY:

CALYX ENGINEERS + CONSULTANTS

6750 TRYON ROAD
CARY, NC 27518
phone: 919.851.1912
CALYXengineers.com

NC License # F-1333

STATE OF NORTH CAROLINA
DEPARTMENT OF TRANSPORTATION
RALEIGH

SUBSTRUCTURE

END BENT
WING DETAILS

REVISIONS						SHEET NO.
NO.	BY:	DATE:	NO.	BY:	DATE:	S-13
1			3			TOTAL SHEETS
2			4			19

ASSEMBLED BY :	W. B. ALLEN	DATE :	2/16
CHECKED BY :	W. A. DAVIS	DATE :	3/16
DRAWN BY : WJH 12/11	REV. 4/15	MAA/TMG	
CHECKED BY : AAC 12/11			

5/12/2016 7:14:30 AM R:\Structures\17BP.4.R.68_SMU_EB2_03.dgn

STD. NO. EB_30_90S4