DocuSign Envelope ID: 982FD4B0-F7AF-454C-92B7-5C32E1E543EE

CALYX
ENGINEERS + CONSULTANTS
6750 TRYON ROAD
CARY, NC 27518
phone: 919.851.1912
CALYXengineers.com
NC License # F-1333
Formerly Malley Engineers & Consultants

PROJECT REFERENCE NO.	SHEET NO.
17BP.4.R.68	2

ROADWAY DESIGN ENGINEER
NORTH CAROLINA PROFESSIONAL ENGINEER SEAL 15759 STEPHEN C. BROWN
DocuSigned by: Stephen C. Brown
DE2797... 42A42B...
9/19/2016

PAVEMENT SCHEDULE

C1	PROP. APPROX. 1 1/2″ ASPHALT CONCRETE SURFACE COURSE TYPE SF9.5A, AT AN AVERAGE RATE OF 165 LBS. PER SQ. YD.
C2	PROP. APPROX. 3″ ASPHALT CONCRETE SURFACE COURSE TYPE SF9.5A, AT AN AVERAGE RATE OF 165 LBS. PER SQ. YD. IN EACH OF TWO LAYERS.
C3	PROP. VAR. DEPTH ASPHALT CONCRETE SURFACE COURSE TYPE SF9.5A, AT AN AVERAGE RATE OF 110 LBS. PER SQ. YD. PER 1″ DEPTH. TO BE PLACED IN LAYERS NOT TO EXCEED 1.5″ IN DEPTH.
E1	PROP. APPROX. 6″ ASPHALT CONCRETE BASE COURSE, TYPE B25.0B, AT AN AVERAGE RATE OF 342 LBS. PER SQ. YD. IN EACH OF TWO LAYERS.
E2	PROP. VAR. DEPTH ASPHALT CONCRETE BASE COURSE, TYPE B25.0B, AT AN AVERAGE RATE OF 114 LBS. PER SQ. YD. PER 1″ DEPTH. TO BE PLACE IN LAYERS NOT LESS THAN 3″ IN DEPTH OR GREATER THAN 5½″ IN DEPTH.
R	PROP. SHOULDER BERM GUTTER
T	EARTH MATERIAL.
U	EXISTING PAVEMENT.
W	VARIABLE DEPTH ASPHALT PAVEMENT (SEE WEDGING DETAIL)

NOTE: PAVEMENT EDGE SLOPES ARE 1:1 UNLESS SHOWN OTHERWISE.

℄ –L– (SR 1501 LONESOME PINE RD)

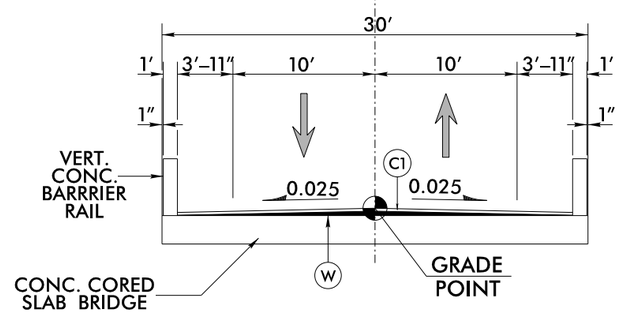

BRIDGE SKETCH NO.1
BRIDGE #37

USE BRIDGE SKETCH NO. 1 AS FOLLOWS:

–L– STA. 12 + 83.94 (BEGIN BRIDGE) TO
13 + 69.06 (END BRIDGE)

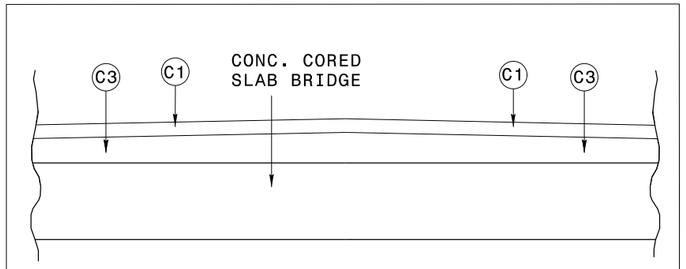

Detail Showing Method of Bridge Wedging

℄ –L– (SR 1501 LONESOME PINE RD)

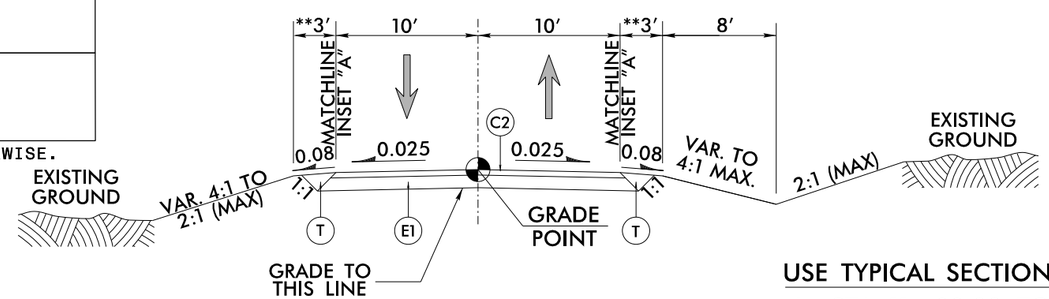

TYPICAL SECTION NO. 1

USE TYPICAL SECTION NO. 1 AS FOLLOWS:

–L– STA. 11 + 00.00 TO 12 + 83.94 (BEGIN BRIDGE)
–L– STA. 13 + 69.06 (END BRIDGE) TO 16 + 30.00

**NOTE 1: USE INSET "A" FOR GUARDRAIL LOCATIONS WITHOUT SHOULDER BERM GUTTER

**NOTE 2: USE INSET "B" FOR GUARDRAIL LOCATIONS WITH SHOULDER BERM GUTTER

INSET "A"

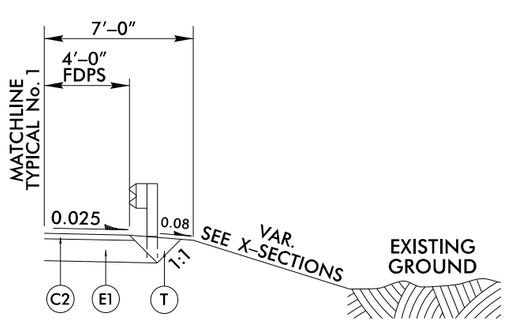

INSET "B"

SHOULDER BERM LOCATIONS:
–L– STA. 12 + 25 TO 12 + 72 (RT.)
–L– STA. 12 + 60 TO 17 + 72 (LT.)

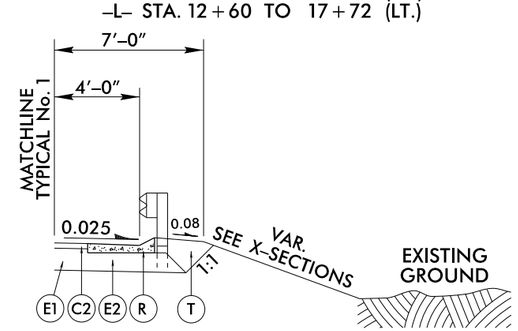

9/19/2016
R:\Roadway\Proj\Nash 37_RDY_TYP.dgn
dbenson