STATE OF NORTH CAROLINA
DEPT. OF TRANSPORTATION
DIVISION OF HIGHWAYS
RALEIGH, N.C.

1-12

ENGLISH STANDARD DRAWING FOR
HIGH MOUNT FOUNDATION

SHEET 1 OF 1
1402D01

TABLE OF FOUNDATION DIMENSIONS AND QUANTITIES 3

HEIGHT OF HIGH MOUNT FT	DIAMETER "C" FT	STIRRUPS		WIND VELOCITY MPH															
				90					110					130					
		SIZE	LAP-FT	DEPTH "D" FT	V BARS QTY	V BARS SIZE	REINF.* STEEL LBS	CONCRETE CY	DEPTH "D" FT	V BARS QTY	V BARS SIZE	REINF.* STEEL LBS	CONCRETE CY	DEPTH "D" FT	V BARS QTY	V BARS SIZE	REINF.* STEEL LBS	CONCRETE CY
60	3.5	#3	1.0	11	8	#8	280	3.9	12	8	#8	306	4.3	13	8	#8	331	4.6
80	3.5	#3	1.0	12	8	#8	306	4.3	13	8	#8	331	4.6	15	8	#8	382	5.3
100	4.0	#3	1.0	13	8	#9	413	6.1	15	8	#9	477	7.0	16	8	#9	509	7.4
120	4.5	#3	1.0	15	8	#10	557	8.2	16	8	#10	636	9.4	18	8	#10	716	10.6

* INCLUDES STIRRUPS AND VERTICAL BARS (V BARS)

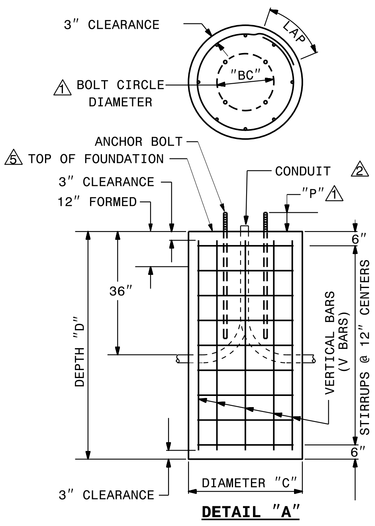

DETAIL "A"

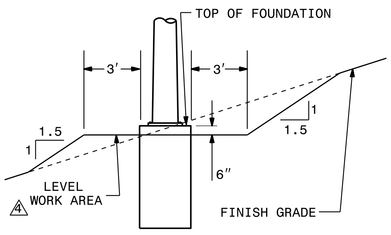

DETAIL "B"

NOTES

1 ANCHOR BOLTS

CONFORM NUMBER, SIZE, AND LENGTH OF ANCHOR BOLTS, BOLT CIRCLE DIAMETER "BC", AND ANCHOR BOLT PROJECTION "P" TO APPROVED HIGH MOUNT STANDARD DRAWINGS.

2 CONDUITS

MATCH ORIENTATION, QUANTITY, TYPE, AND SIZE OF CONDUITS TO THE LAYOUT SHEETS. STUB AND CAP ONE SPARE CONDUIT AT EACH FOUNDATION. PROJECT CONDUIT A MAXIMUM OF 2" ABOVE TOP OF FOUNDATION. PLACE CONDUIT 30" BENEATH FINISH GRADE. INCLUDE ¾" CONDUIT FOR GROUNDING ELECTRODE CONDUCTOR TO GROUND ROD AT HIGH MAST FOUNDATION.

3 DIMENSIONS & QUANTITIES

DIMENSIONS AND QUANTITIES OF CONCRETE AND REINFORCING STEEL ARE GIVEN FOR THE PURPOSE OF OBTAINING BID PRICES ONLY. SEE PROJECT SPECIAL PROVISIONS FOR OTHER STRUCTURAL REQUIREMENTS.

4 WORK AREA

PROVIDE A LEVEL WORK AREA AROUND EACH FOUNDATION. CUT/FILL SLOPES MAY BE ADJUSTED AS DIRECTED BY THE ENGINEER.

5 ELEVATION

SET TOP OF FOUNDATION AT 6" ABOVE LEVEL WORK AREA. SEE DETAIL "B".

6 GUARDRAIL

WHERE GUARDRAIL IS REQUIRED TO BE INSTALLED AS PART OF LIGHTING WORK, SET GUARDRAIL NO MORE THAN 8' FROM CENTER OF HIGH MAST FOUNDATION.

STATE OF NORTH CAROLINA
DEPT. OF TRANSPORTATION
DIVISION OF HIGHWAYS
RALEIGH, N.C.

1-12

ENGLISH STANDARD DRAWING FOR
HIGH MOUNT FOUNDATION

SHEET 1 OF 1
1402D01

STATE OF NORTH CAROLINA
DEPT. OF TRANSPORTATION
DIVISION OF HIGHWAYS
RALEIGH, N.C.

1-12

ENGLISH STANDARD DRAWING FOR
HIGH MOUNT LED LUMINAIRES

SHEET 1 OF 1
1403D01

TYPICAL CONFIGURATION TYPES

TYPE A

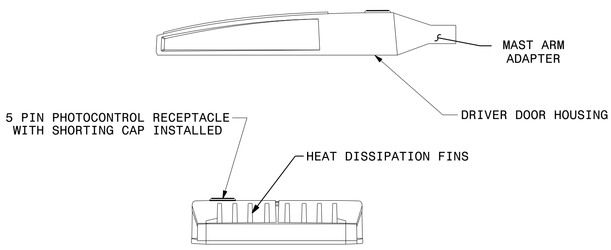

TYPE B

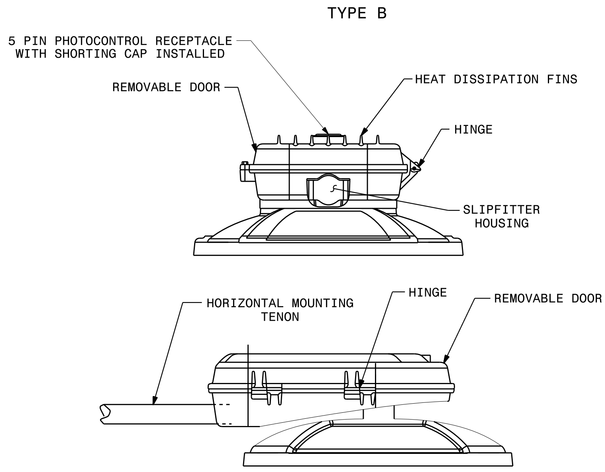

LED LUMEN PACKAGES 1

MOUNTING HEIGHT	# OF LUMINAIRES	MAXIMUM LUMINAIRE WATTAGE	MINIMUM LUMINAIRE DELIVERED LUMENS	MAXIMUM LAMP LUMEN MAINTENANCE FACTOR (100K HOURS & 25° C)	COLOR TEMP.
60'	4	320	30,000	0.83	4,000K
80'	8	320	30,000	0.83	4,000K
100'	6	550	53,000	0.83	4,000K
120'	8	550	53,000	0.83	4,000K

△ NOTES

1 SEE PLANS FOR IES DISTRIBUTION

STATE OF NORTH CAROLINA
DEPT. OF TRANSPORTATION
DIVISION OF HIGHWAYS
RALEIGH, N.C.

1-12

ENGLISH STANDARD DRAWING FOR
HIGH MOUNT LED LUMINAIRES

SHEET 1 OF 1
1403D01

Rev.	Date	Description	Approved
1			
2			

NORTH CAROLINA DEPARTMENT OF TRANSPORTATION
ROADWAY DESIGN LIGHTING/ELECTRICAL SECTION

HIGH MOUNT FOUNDATION AND HIGH MOUNT LED LUMINAIRE DETAILS
US 64 AND NC 58 INTERCHANGE
NASH COUNTY

Drawn By: RGH
Approved By: PKC
Dwg No.:

PROJECT REFERENCE NO. SS-4904CX
SHEET NO. E3

NORTH CAROLINA PROFESSIONAL SEAL 025282 ENGINEER Paul Chan
DocuSigned by: 4/10/2015