PROJECT REFERENCE NO.	SHEET NO.
SS-4904CX	E2

NORTH CAROLINA PROFESSIONAL SEAL 022582 ENGINEER PAUL KI-BUN CHAN

DocuSigned by: Paul Chan 4/10/2015
F83C4985EEEF4A2...

USE FOR LIGHTING CONSTRUCTION ONLY

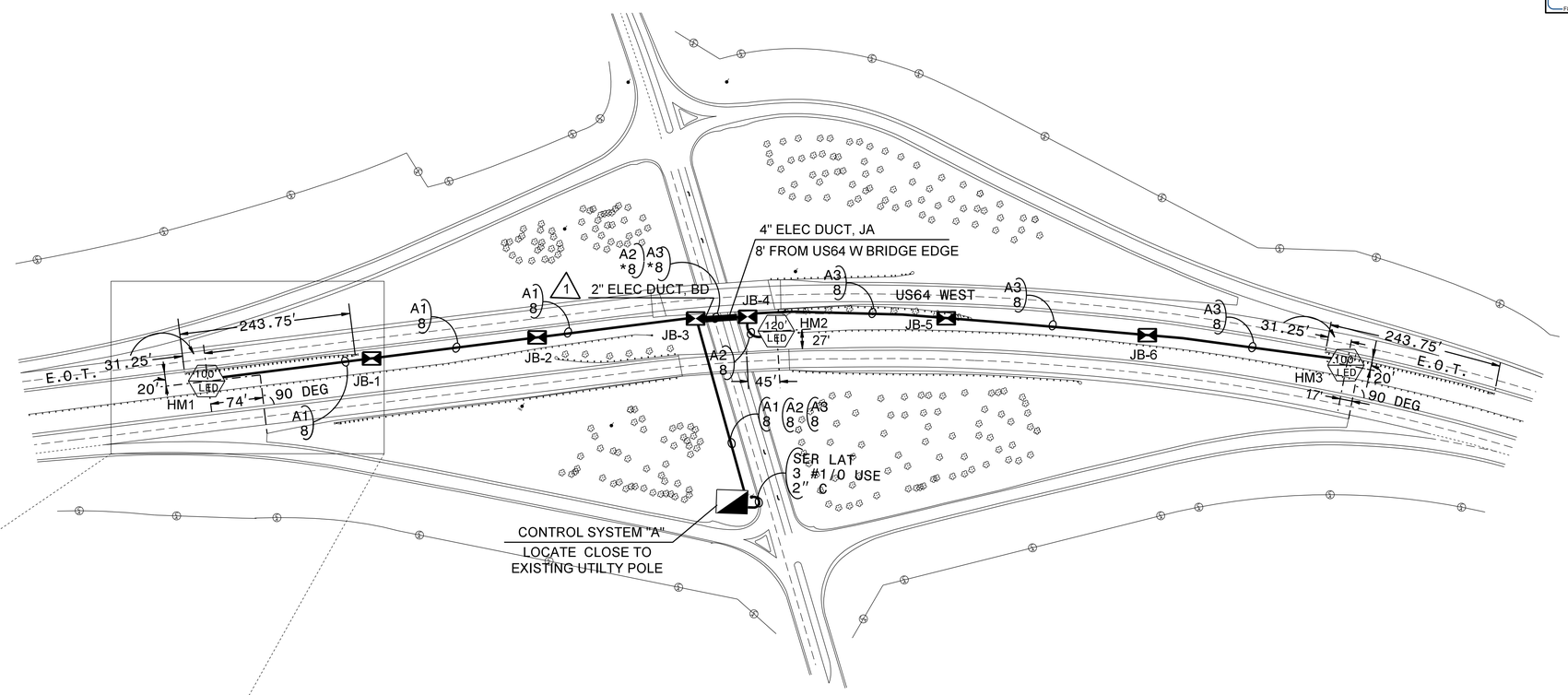

SEE SHEET "E1" FOR LEGEND & △ NOTES

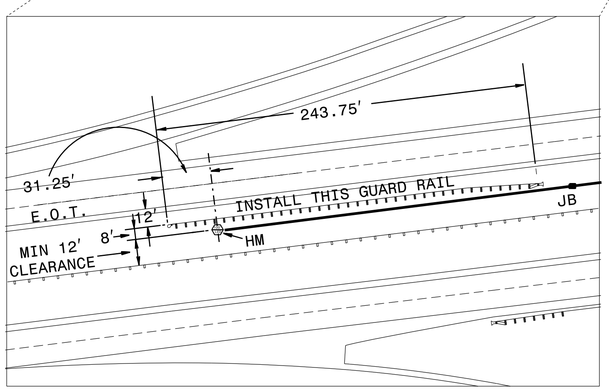

GORE AREA HM GR SUMMARY

1 GRAU BEGIN UNIT
15 12.5' RIGID GUARDRAIL UNITS
1 CAT-1

LOAD SCHEDULE
SW QUADRANT OF US64 AND NC58 INTERCHANGE
1Ø, 3W, 240/480 VAC — CONTROL SYSTEM "A"

CIRCUIT ID	100' HIGH MAST W/ 6 550W MAX. LED LUMINAIRES	120' HIGH MAST W/ 8 550W MAX. LED LUMINAIRES	AMPS @ 480V	KW LOAD	BREAKER SIZE (AMPS)
A1	HM1		6.9	3.3	15
A2		HM2	9.2	4.4	15
A3	HM3		6.9	3.3	15
SPARE					15
TOTAL	2	1	23.0	11.0	

0 50 100

Rev.	Date	Description	Approved
2			
1			

NORTH CAROLINA DEPARTMENT OF TRANSPORTATION
ROADWAY DESIGN — LIGHTING/ELECTRICAL SECTION

LIGHTING LAYOUT
US 64 AND NC 58
INTERCHANGE IN NASHVILLE

NASH COUNTY

Drawn By: SKS	Approved By: PKC	Dwg No.:

10-APR-2015 11:49
S:\RD06-Hare\Lighting & Electrical Squad-Chan\Projects\Div 4 TIP SS-4904CX (US64-NC58 Interchange)\Nash Co\Plan sheet\220_004_SS4904CX_LE_E2.dgn
sksaha AT RD261582