STATE	STATE PROJECT REFERENCE NO.	SHEET NO.	TOTAL SHEETS
N.C.	BD-5104K /BD-5104L		

W.S.B. ELEMENT	F. A. PROJ. NO.	DESCRIPTION
45350.3.12	BRZ-1109(10)	P.E., R /W, UTIL & CONST.
45350.3.13	BRZ-1109(11)	P.E., R /W, UTIL & CONST.

STATE OF NORTH CAROLINA
DIVISION OF HIGHWAYS

NASH COUNTY

LOCATION: BRIDGE NO. 59 OVER TURKEY CREEK AND BRIDGE NO. 60 OVER TURKEY CREEK OVERFLOW ON SR 1109 (STONEY HILL CHURCH RD.)

TYPE OF WORK: GRADING, DRAINAGE, PAVING AND STRUCTURE

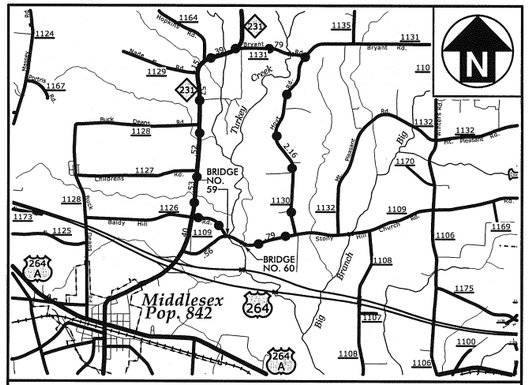

VICINITY MAP — DETOUR ROUTE

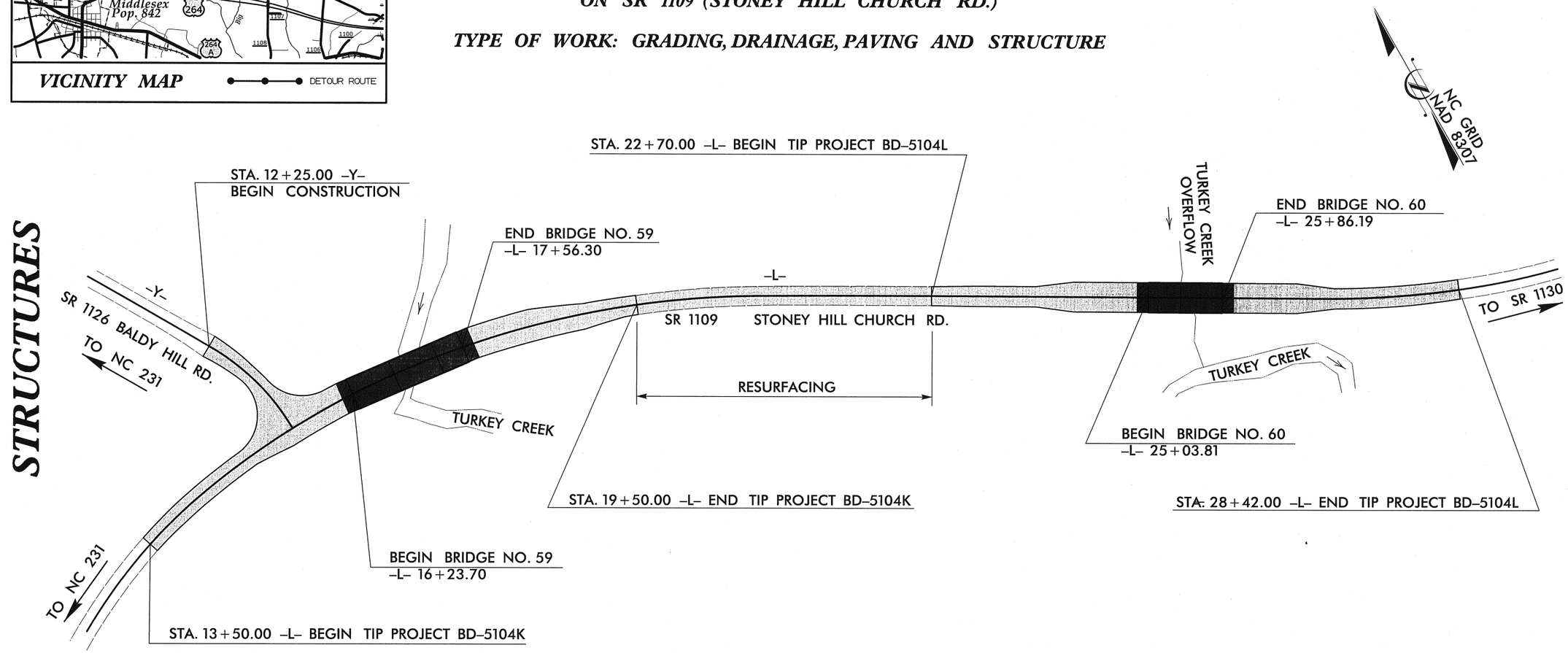

STRUCTURES

TIP PROJECT: BD-5101K /BD-5104L

CONTRACT:

STATE OF NORTH CAROLINA DEPARTMENT OF TRANSPORTATION

DESIGN DATA

ADT 2005 = 920

FUNC. CLASS. = MINOR COLLECTOR

PROJECT LENGTH

LENGTH ROADWAY TIP PROJECT BD-5101K	=	0.089 MILES
LENGTH STRUCTURE TIP PROJECT BD-5101K	=	0.025 MILES
TOTAL LENGTH TIP PROJECT BD-5101K	=	0.114 MILES
LENGTH ROADWAY TIP PROJECT BD-5101L	=	0.092 MILES
LENGTH STRUCTURE TIP PROJECT BD-5101L	=	0.016 MILES
TOTAL LENGTH TIP PROJECT BD-5101L	=	0.108 MILES

Prepared In the Office of:
MULKEY ENGINEERS & CONSULTANTS
PO Box 33127
Raleigh, N.C. 27636
(919) 851-1912
(919) 851-1918 (FAX)
WWW.MULKEYINC.COM

FOR THE NORTH CAROLINA DEPT. OF TRANSPORTATION

2012 STANDARD SPECIFICATIONS

LETTING DATE:
AUGUST 2013

L. KEVIN AUSTIN, PE
PROJECT ENGINEER

JOHN ROUSE, PE
NCDOT DIVISION 4 ENGINEER

STRUCTURE DESIGN ENGINEER

NORTH CAROLINA PROFESSIONAL SEAL 19661 ENGINEER L. KEVIN AUSTIN 7/2/13

SIGNATURE: L. Kevin Austin P.E.

DIVISION OF HIGHWAYS
STATE OF NORTH CAROLINA

STATE HIGHWAY DESIGN ENGINEER P.E.

7/2/2013
R:\Structures\BD5104K_SD_TSH_01.dgn
12:22:51 PM

WBS # 45350.3.12

CONTRACT #

F.A. PROJECT NO. BRZ-1109(10)

EXISTING BRIDGE No. 59
24'-0" CLEAR ROADWAY
SPANS: 1 @ 18'-1", 1 @ 16'-10",
2 @ 17'-2", 1 @ 17'-5", 1 @ 17'-9"
REINF. CONC. FLOOR ON TIMBER JOIST
END BENTS & INT. BENT-
TIMBER CAPS ON TIMBER PILES

TBM: BM#1
RR SPIKE IN BASE OF 10" OAK
53.48' RIGHT OF -L- STA. 15+96.55
ELEV. 175.59

REMOVAL OF EXISTING PAVEMENT

EXISTING UTILITIES TO BE RELOCATED BY OTHERS.

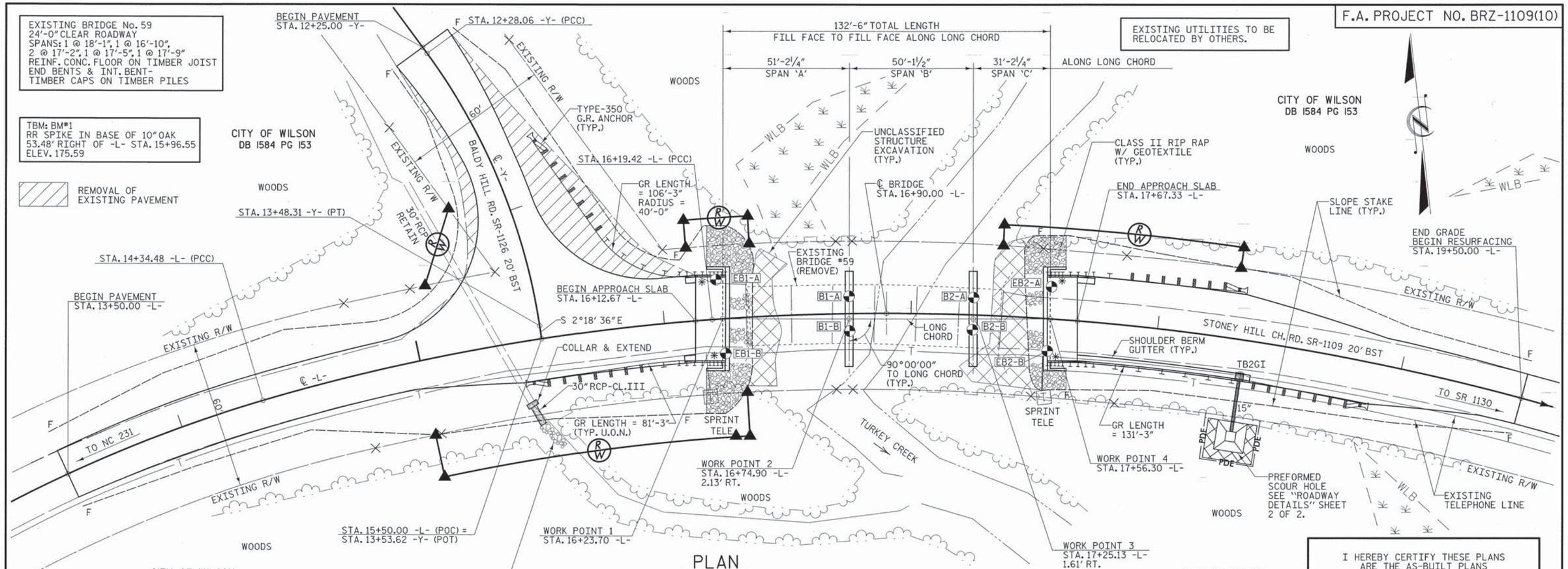

PLAN

SCALE: 1" = 20'

DENOTES GEO-TECH BORE HOLE LOCATIONS.

* DENOTES TYPE III GUARDRAIL CONNECTION REQ'D. SEE "GUARDRAIL ANCHORAGE FOR VERTICAL CONCRETE BARRIER RAIL" SHEET.

NOTE: GUARDRAIL LENGTHS AS SHOWN INCLUDE ANCHOR UNITS.

U.O.N. - UNLESS OTHERWISE NOTED

FOR PAVEMENT LAYOUT, R/W LAYOUT & PDE LAYOUT SEE "ROADWAY DETAILS" SHEET 1 OF 2.

I HEREBY CERTIFY THESE PLANS ARE THE AS-BUILT PLANS

PI = 14+25.00	PI = 15+50.00	PI = 18+50.00
EL = 179.47'	EL = 180.59'	EL = 179.69'
VC = 110'	VC = 130'	VC = 40'
K = 119	K = 109	K = 99
D.S. = 50 mph	D.S. = 50 mph	D.S. = 50 mph
(-)0.0316% △ (+)0.8901%	(+)0.8901% △ (-)0.3000%	(-)0.3000% △ (-)0.7024%

GRADE DATA
-L- (SR 1109)

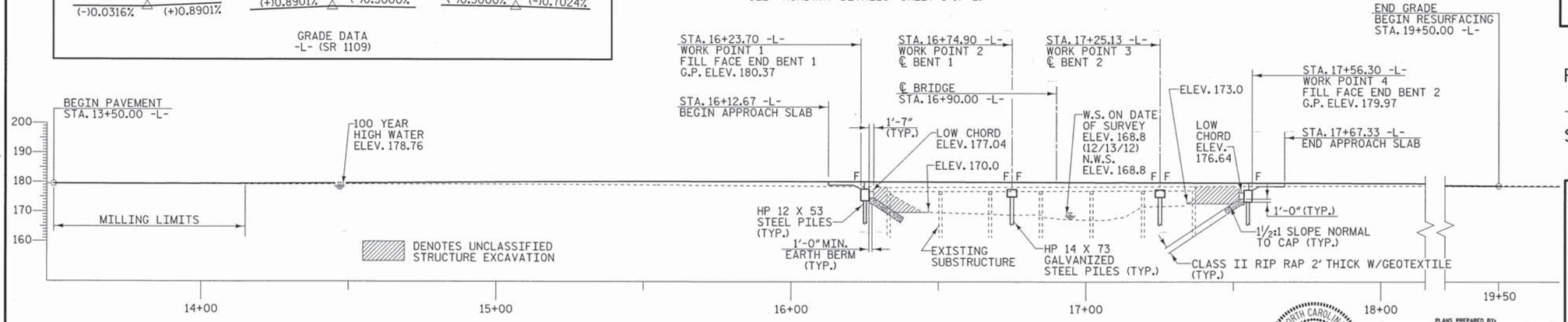

NOTE: THE APPROXIMATE NATURAL GROUND ELEVATIONS ARE ALONG THE EDGE OF THE BRIDGE ON THE UPSTREAM SIDE.

PROFILE ALONG ℄ SURVEY

SCALE: 1" = 20'

F = FIXED END

PROJECT NO. BD-5104K

NASH COUNTY

STATION: 16+90.00 -L-

REPLACES BRIDGE NO. 59 SHEET 1 OF 2

STATE OF NORTH CAROLINA
DEPARTMENT OF TRANSPORTATION
RALEIGH

GENERAL DRAWING

BRIDGE ON SR 1109
OVER TURKEY CREEK
BETWEEN SR 1126 & SR 1130

33'-10" CLEAR ROADWAY - 90° SKEW

NORTH CAROLINA PROFESSIONAL SEAL 19661 ENGINEER KEVIN AUSTIN 3/11/13

PLANS PREPARED BY:
MULKEY ENGINEERS & CONSULTANTS
PO Box 33127
RALEIGH, N.C. 27636
(919) 851-1912
(919) 851-1918 (FAX)
WWW.MULKEYINC.COM
NC LICENSE NO. C-1021

REVISIONS								SHEET NO.
NO.	BY:	DATE:	NO.	BY:	DATE:			1
1			3					TOTAL SHEETS
2			4					63

DRAWN BY : W. B. ALLEN DATE : 3/13
CHECKED BY : L. K. AUSTIN DATE : 4/13

7/11/2013 9:47:39 AM R:\Structures\BD5104K_SD_GD_01.dgn

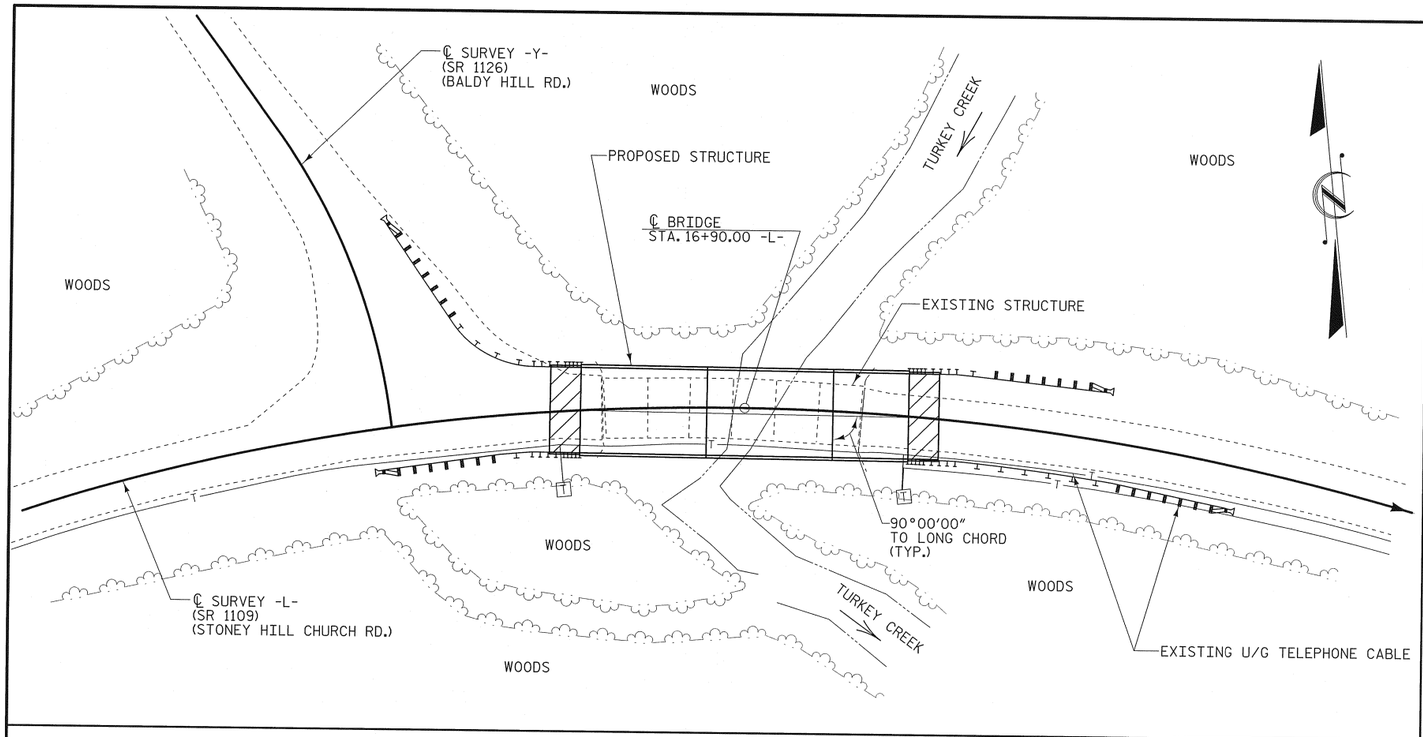

LOCATION SKETCH

TOTAL BILL OF MATERIAL

	REMOVAL OF EXISTING STRUCTURE	UNCLASSIFIED STRUCTURE EXCAVATION	CLASS A CONCRETE	BRIDGE APPROACH SLABS	REINFORCING STEEL	HP 12 X 53 STEEL PILES		HP 14 X 73 GALVANIZED STEEL PILES		STEEL PILE POINTS	PREDRILLING FOR PILES
	LUMP SUM	LUMP SUM	CU. YARDS	LUMP SUM	LBS.	NO.	LIN. FT.	NO.	LIN. FT.	EACH	LIN. FT.
SUPERSTRUCTURE	LUMP SUM			LUMP SUM							
END BENT 1		LUMP SUM	22.8		2806	7	165			7	
BENT 1			11.7		2339			8	340	8	200
BENT 2			11.7		2339			8	280	8	160
END BENT 2		LUMP SUM	22.8		2806	7	245				
TOTAL	LUMP SUM	LUMP SUM	69.0	LUMP SUM	10,290	14	410	16	620	23	360

TOTAL BILL OF MATERIAL

	VERTICAL CONCRETE BARRIER RAIL	RIP RAP CLASS II (2'-0" THICK)	GEOTEXTILE FOR DRAINAGE	ELASTOMERIC BEARINGS	3'-0" X 1'-9" PRESTRESSED CONCRETE CORED SLABS	
	LIN. FT.	TONS	SQ. YARDS	LUMP SUM	NO.	LIN. FT.
SUPERSTRUCTURE	260.50			LUMP SUM	36	1560.00
END BENT 1		190	215			
BENT 1						
BENT 2						
END BENT 2		105	115			
TOTAL	260.50	295	330	LUMP SUM	36	1560.00

HYDROGRAPHIC DATA:

DESIGN DISCHARGE -	4800 CFS
FREQUENCY OF DESIGN FLOOD -	25 YEAR
DESIGN HIGH WATER ELEVATION -	176.7
DRAINAGE AREA -	37.5 SQ. MI.
BASE DISCHARGE (Q 100) -	7323 (FEMA) CFS
BASE HIGH WATER ELEVATION -	178.76

OVERTOPPING FLOOD DATA:

OVERTOPPING DISCHARGE -	5200 CFS
FREQUENCY OF OVERTOPPING FLOOD -	25+ YEAR
OVERTOPPING FLOOD ELEVATION -	177.2

OVERTOPPING OCCURS AT ROADWAY STA. 23+03.80 -L-
CENTERLINE AT SAG

NOTES

ASSUMED LIVE LOAD = HL-93 OR ALTERNATE LOADING.

THIS BRIDGE HAS BEEN DESIGNED IN ACCORDANCE WITH THE AASHTO LRFD BRIDGE DESIGN SPECIFICATIONS.

THIS BRIDGE IS LOCATED IN SEISMIC ZONE 1.

FOR EROSION CONTROL MEASURES SEE EROSION CONTROL PLANS.

FOR OTHER DESIGN DATA AND GENERAL NOTES, SEE SHEET SN.

REMOVAL OF THE EXISTING BRIDGE SHALL BE PERFORMED SO AS NOT TO ALLOW DEBRIS TO FALL INTO THE WATER. THE CONTRACTOR SHALL REMOVE THE BRIDGE AND SUBMIT PLANS FOR THE DEMOLITION IN ACCORDANCE WITH ARTICLE 402-2 OF THE STANDARD SPECIFICATIONS.

THE MATERIAL SHOWN ON SHEET 1 IN THE CROSS-HATCHED AREA SHALL BE EXCAVATED FOR A DISTANCE OF 25 FT. EACH SIDE OF CENTERLINE ROADWAY AS DIRECTED BY THE ENGINEER. THIS WORK WILL BE PAID FOR AT THE CONTRACT LUMP SUM PRICE FOR UNCLASSIFIED STRUCTURE EXCAVATION.

THE SUBSTRUCTURE OF THE EXISTING BRIDGE INDICATED ON THE PLANS IS FROM THE BEST INFORMATION AVAILABLE. SINCE THIS INFORMATION IS SHOWN FOR THE CONVENIENCE OF THE CONTRACTOR, THE CONTRACTOR SHALL HAVE NO CLAIM WHATSOEVER AGAINST THE DEPARTMENT OF TRANSPORTATION FOR ANY DELAYS OR ADDITIONAL COST INCURRED BASED ON DIFFERENCES BETWEEN THE EXISTING BRIDGE SUBSTRUCTURE SHOWN ON THE PLANS AND THE ACTUAL CONDITIONS AT THE PROJECT SITE.

THIS STRUCTURE HAS BEEN DESIGNED IN ACCORDANCE WITH "HEC 18 - EVALUATING SCOUR AT BRIDGES".

THE CONTRACTOR SHALL PROVIDE INDEPENDENT ASSURANCE SAMPLES OF REINFORCING STEEL AS FOLLOWS: FOR PROJECTS UP TO 400 TONS OF REINFORCING STEEL, ONE 30 INCH SAMPLE OF EACH SIZE BAR USED, AND FOR PROJECTS OVER 400 TONS OF REINFORCING STEEL, TWO 30 INCH SAMPLES OF EACH SIZE BAR USED. THE BARS FROM WHICH THE SAMPLES ARE TAKEN MUST THEN BE SPLICED WITH REPLACEMENT BARS OF THE SIZE AND LENGTH OF THE SAMPLE, PLUS A MINIMUM LAP SPLICE OF THIRTY BAR DIAMETERS. PAYMENT FOR THE SAMPLES OF REINFORCING STEEL SHALL BE CONSIDERED INCIDENTAL TO VAROIUS PAY ITEMS.

FOR PILES SEE SECTION 450 OF THE STANDARD SPECIFICATIONS.

PILES AT END BENT NO. 1 ARE DESIGNED FOR A FACTORED RESISTANCE OF 71 TONS PER PILE.

DRIVE PILES AT END BENT NO. 1 TO A REQUIRED DRIVING RESISTANCE OF 120 TONS PER PILE.

STEEL H-PILE POINTS ARE REQUIRED FOR STEEL H-PILES AT END BENT NO. 1. FOR STEEL PILE POINTS, SEE SECTION 450 OF THE STANDARD SPECIFICATIONS.

PILES AT END BENT NO. 2 ARE DESIGNED FOR A FACTORED RESISTANCE OF 54 TONS PER PILE.

DRIVE PILES AT END BENT NO. 2 TO A REQUIRED DRIVING RESISTANCE OF 90 TONS PER PILE.

PILES AT BENT NO. 1 ARE DESIGNED FOR A FACTORED RESISTANCE OF 118 TONS PER PILE.

DRIVE PILES AT BENT NO. 1 TO A REQUIRED DRIVING RESISTANCE OF 260 TONS PER PILE. THIS REQUIRED DRIVING RESISTANCE INCLUDES ADDITIONAL RESISTANCE FOR DOWNDRAG OR SCOUR.

INSTALL PILES AT BENT NO. 1 TO A TIP ELEVATION NO HIGHER THAN 139 FT. (L), AND 141 FT. (R & C).

THE SCOUR CRITICAL ELEVATION FOR BENT NO. 1 IS ELEVATION 158 FT. SCOUR CRITICAL ELEVATIONS ARE USED TO MONITOR POSSIBLE SCOUR PROBLEMS DURING THE LIFE OF THE STRUCTURE.

PILES AT BENT NO. 2 ARE DESIGNED FOR A FACTORED RESISTANCE OF 88 TONS PER PILE.

DRIVE PILES AT BENT NO. 2 TO A REQUIRED DRIVING RESISTANCE OF 205 TONS PER PILE. THIS REQUIRED DRIVING RESISTANCE INCLUDES ADDITIONAL RESISTANCE FOR DOWNDRAG OR SCOUR.

INSTALL PILES AT BENT NO. 2 TO A TIP ELEVATION NO HIGHER THAN 144 FT. (L), AND 147 FT. (R & C).

THE SCOUR CRITICAL ELEVATION FOR BENT NO. 2 IS ELEVATION 160 FT. SCOUR CRITICAL ELEVATIONS ARE USED TO MONITOR POSSIBLE SCOUR PROBLEMS DURING THE LIFE OF THE STRUCTURE.

FOR INTERIOR BENT NO. 1, ONLY PARTIAL GALVANIZING OF THE PILES IS REQUIRED. SEE INTERIOR BENT SHEET FOR REQUIRED GALVANIZED LENGTHS. PAYMENT FOR PARTIALLY GALVANIZED PILES WILL BE MADE UNDER THE CONTRACT UNIT PRICE FOR GALVANIZED STEEL PILES.

STEEL H-PILE POINTS ARE REQUIRED FOR STEEL H-PILES AT BENT NO. 1 AND BENT NO. 2. FOR STEEL PILE POINTS, SEE SECTION 450 OF THE STANDARD SPECIFICATIONS.

IT HAS BEEN ESTIMATED THAT A HAMMER WITH AN EQUIVALENT RATED ENERGY IN THE RANGE OF 40 TO 80 FT-KIPS PER BLOW WILL BE REQUIRED TO DRIVE PILES AT BENT NO. 1 AND BENT NO. 2. THIS ESTIMATED ENERGY RANGE DOES NOT RELEASE THE CONTRACTOR FROM PROVIDING DRIVING EQUIPMENT IN ACCORDANCE WITH SUBARTICLE 450-3(D)(2) OF THE STANDARD SPECIFICATIONS.

IF NECESSARY, PREDRILL PILE LCATIONS AT BENT NO. 1 TO ELEVATION 141 FEET WITH EQUIPMENT THAT WILL RESULT IN A MAXIMUM PREDRILLING DIAMETER OF 24". FOR PREDRILLING PILES, SEE SECTION 450 OF THE STANDARD SPECIFICATIONS.

IF NECESSARY, PREDRILL PILE LCATIONS AT BENT NO. 2 TO ELEVATION 146 FEET WITH EQUIPMENT THAT WILL RESULT IN A MAXIMUM PREDRILLING DIAMETER OF 24". FOR PREDRILLING PILES, SEE SECTION 450 OF THE STANDARD SPECIFICATIONS.

TEMPORARY STEEL CASINGS MAY BE REQUIRED FOR PREDRILLING AT BENT NO. 1 AND BENT NO. 2.

ADT = 920 FOR YEAR 2005.

ROADWAY APPROACH EMBANKMENT SHALL BE WIDENED AS NECESSARY FOR GUARDRAIL INSTALLATION.

FOR SUBMITTAL OF WORKING DRAWINGS, SEE SPECIAL PROVISIONS.

FOR FALSEWORK AND FORMWORK, SEE SPECIAL PROVISIONS.

FOR CRANE SAFETY, SEE SPECIAL PROVISIONS.

FOR GROUT FOR STRUCTURES, SEE SPECIAL PROVISIONS.

NO DECK DRAINS REQUIRED.

ASPHALT WEARING SURFACE IS INCLUDED IN ROADWAY QUANTITY ON ROADWAY PLANS.

PROJECT NO. BD-5104K
NASH COUNTY
STATION: 16+90.00 -L-

REPLACES BRIDGE NO. 59 SHEET 2 OF 2

STATE OF NORTH CAROLINA
DEPARTMENT OF TRANSPORTATION
RALEIGH

GENERAL DRAWING

BRIDGE ON SR 1109
OVER TURKEY CREEK
BETWEEN SR 1126 & SR 1130

33'-10" CLEAR ROADWAY - 90° SKEW

NORTH CAROLINA PROFESSIONAL SEAL ENGINEER L. KEVIN AUSTIN 19661 7/2/13

PLANS PREPARED BY:
MULKEY ENGINEERS & CONSULTANTS
PO Box 33127
RALEIGH, N.C. 27636
(919) 851-1912
(919) 851-1918 (FAX)
WWW.MULKEYINC.COM
NC LICENSE NO. C-1021

REVISIONS						SHEET NO.
NO.	BY:	DATE:	NO.	BY:	DATE:	2
1			3			TOTAL SHEETS
2			4			63

DRAWN BY : W. B. ALLEN DATE : 5/13
CHECKED BY : L. K. AUSTIN DATE : 6/13

7/2/2013 12:24:25 PM R:\Structures\BD5104K_SD_GD_02.dgn

LOAD AND RESISTANCE FACTOR RATING (LRFD) SUMMARY FOR PRESTRESSED CONCRETE GIRDERS

LEVEL		VEHICLE	WEIGHT (W) (TONS)	CONTROLLING LOAD RATING	MINIMUM RATING FACTORS (RF)	TONS = W X RF	STRENGTH I LIMIT STATE											SERVICE III LIMIT STATE						COMMENT NUMBER
								MOMENT					SHEAR						MOMENT					
							LIVELOAD FACTORS	DISTRIBUTION FACTORS (DF)	RATING FACTOR	SPAN	GIRDER LOCATION	DISTANCE FROM LEFT END OF SPAN (ft)	DISTRIBUTION FACTORS (DF)	RATING FACTOR	SPAN	GIRDER LOCATION	DISTANCE FROM LEFT END OF SPAN (ft)	LIVELOAD FACTORS	DISTRIBUTION FACTORS (DF)	RATING FACTOR	SPAN	GIRDER LOCATION	DISTANCE FROM LEFT END OF SPAN (ft)	
DESIGN LOAD RATING		HL-93(Inv)	N/A	(1)	1.394	--	1.75	0.276	1.57	50'	EL	24.5	0.531	**1.39**	50'	EL	**2.45**	0.80	0.276	1.44	50'	EL	24.5	
		HL-93(Opr)	N/A	--	1.807	--	1.35	0.276	2.03	50'	EL	24.5	0.531	1.81	50'	EL	2.45	N/A	--	--	--	--	--	
		HS-20(Inv)	36.000	(2)	1.667	60.007	1.75	0.276	1.95	50'	EL	24.5	0.531	**1.67**	50'	EL	**2.45**	0.80	0.276	1.79	50'	EL	24.5	
		HS-20(Opr)	36.000	--	2.161	77.787	1.35	0.276	2.52	50'	EL	24.5	0.531	2.16	50'	EL	2.45	N/A	--	--	--	--	--	
LEGAL LOAD RATING	SV	SNSH	13.500	--	3.635	49.079	1.40	0.276	4.95	50'	EL	24.5	0.531	4.70	50'	EL	2.45	0.80	0.276	3.64	50'	EL	24.5	
		SNGARBS2	20.000	--	2.871	57.42	1.40	0.276	3.91	50'	EL	24.5	0.531	3.42	50'	EL	2.45	0.80	0.276	2.87	50'	EL	24.5	
		SNAGRIS2	22.000	--	2.778	61.109	1.40	0.276	3.78	50'	EL	19.6	0.531	3.21	50'	EL	2.45	0.80	0.276	2.78	50'	EL	24.5	
		SNCOTTS3	27.250	--	1.814	49.418	1.40	0.276	2.47	50'	EL	24.5	0.531	2.36	50'	EL	2.45	0.80	0.276	1.81	50'	EL	24.5	
		SNAGGRS4	34.925	--	1.577	55.063	1.40	0.276	2.15	50'	EL	24.5	0.531	2.01	50'	EL	2.45	0.80	0.276	1.58	50'	EL	24.5	
		SNS5A	35.550	--	1.537	54.657	1.40	0.276	2.09	50'	EL	24.5	0.531	2.07	50'	EL	2.45	0.80	0.276	1.54	50'	EL	24.5	
		SNS6A	39.950	--	1.438	57.430	1.40	0.276	1.96	50'	EL	24.5	0.531	1.91	50'	EL	2.45	0.80	0.276	1.44	50'	EL	24.5	
		SNS7B	42.000	--	1.370	57.540	1.40	0.276	1.87	50'	EL	24.5	0.531	1.91	50'	EL	2.45	0.80	0.276	1.37	50'	EL	24.5	
	TTST	TNAGRIT3	33.000	--	1.761	58.118	1.40	0.276	2.40	50'	EL	24.5	0.531	2.25	50'	EL	2.45	0.80	0.276	1.76	50'	EL	24.5	
		TNT4A	33.075	--	1.777	58.759	1.40	0.276	2.42	50'	EL	24.5	0.531	2.17	50'	EL	2.45	0.80	0.276	1.78	50'	EL	24.5	
		TNT6A	41.600	--	1.480	61.558	1.40	0.276	2.01	50'	EL	24.5	0.531	2.08	50'	EL	2.45	0.80	0.276	1.48	50'	EL	24.5	
		TNT7A	42.000	--	1.502	63.087	1.40	0.276	2.05	50'	EL	24.5	0.531	1.94	50'	EL	2.45	0.80	0.276	1.50	50'	EL	24.5	
		TNT7B	42.000	--	1.566	65.773	1.40	0.276	2.13	50'	EL	24.5	0.531	1.84	50'	EL	2.45	0.80	0.276	1.57	50'	EL	24.5	
		TNAGRIT4	43.000	--	1.486	63.902	1.40	0.276	2.02	50'	EL	24.5	0.531	1.77	50'	EL	2.45	0.80	0.276	1.49	50'	EL	24.5	
		TNAGT5A	45.000	--	1.388	62.470	1.40	0.276	1.89	50'	EL	24.5	0.531	1.80	50'	EL	2.45	0.80	0.276	1.39	50'	EL	24.5	
		TNAGT5B	45.000	(3)	1.360	61.206	1.40	0.276	1.85	50'	EL	24.5	0.531	1.68	50'	EL	2.45	0.80	0.276	**1.36**	50'	EL	**24.5**	

LOAD FACTORS:

DESIGN LOAD RATING FACTORS	LIMIT STATE	γ_{DC}	γ_{DW}
	STRENGTH I	1.25	1.50
	SERVICE III	1.00	1.00

NOTES:

MINIMUM RATING FACTORS ARE BASED ON THE STRENGTH I AND SERVICE III LIMIT STATES.

ALLOWABLE STRESSES FOR SERVICE III LIMIT STATE ARE AS REQUIRED FOR DESIGN.

COMMENTS:

1.
2.
3.
4.

(#) CONTROLLING LOAD RATING

(1) DESIGN LOAD RATING (HL-93)

(2) DESIGN LOAD RATING (HS-20)

(3) LEGAL LOAD RATING **

** SEE CHART FOR VEHICLE TYPE

GIRDER LOCATION

I - INTERIOR GIRDER
EL - EXTERIOR LEFT GIRDER
ER - EXTERIOR RIGHT GIRDER

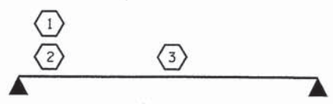

LRFR SUMMARY

FOR SPANS 'A' & 'B'

PROJECT NO. BD-5104K

NASH COUNTY

STATION: 16+90.00 -L-

NORTH CAROLINA PROFESSIONAL SEAL 14045 ENGINEER TIMOTHY V. COGGINS

06/07/13

STATE OF NORTH CAROLINA
DEPARTMENT OF TRANSPORTATION
RALEIGH

STANDARD

LRFR SUMMARY FOR 50' CORED SLAB UNIT 90° SKEW (NON-INTERSTATE TRAFFIC)

REVISIONS						SHEET NO.
NO.	BY:	DATE:	NO.	BY:	DATE:	3
1			3			TOTAL SHEETS
2			4			63

ASSEMBLED BY :	K. P. SEDAI	DATE : 5/29/13
CHECKED BY :	M. D. PISO	DATE : 5/30/13
DRAWN BY : CVC	6/10	
CHECKED BY : DNS	6/10	

07-JUN-2013 12:30
S:\DPGI\Tim\Division 4 LIBR\BD-5104K\ksedai\NCBDS\BD-5104K_Plans.dgn
tcoggins

STD. NO. 21LRFR1.005.50L

LOAD AND RESISTANCE FACTOR RATING (LRFD) SUMMARY FOR PRESTRESSED CONCRETE GIRDERS

LEVEL		VEHICLE	WEIGHT (W) (TONS)	CONTROLLING LOAD RATING	MINIMUM RATING FACTORS (RF)	TONS = W X RF	STRENGTH I LIMIT STATE											SERVICE III LIMIT STATE						COMMENT NUMBER
							LIVELOAD FACTORS	MOMENT					SHEAR					LIVELOAD FACTORS	MOMENT					
								DISTRIBUTION FACTORS (DF)	RATING FACTOR	SPAN	GIRDER LOCATION	DISTANCE FROM LEFT END OF SPAN (ft)	DISTRIBUTION FACTORS (DF)	RATING FACTOR	SPAN	GIRDER LOCATION	DISTANCE FROM LEFT END OF SPAN (ft)		DISTRIBUTION FACTORS (DF)	RATING FACTOR	SPAN	GIRDER LOCATION	DISTANCE FROM LEFT END OF SPAN (ft)	
DESIGN LOAD RATING		HL-93(Inv)	N/A	1	1.037	--	1.75	0.283	1.83	30'	EL	14.5	0.574	**1.04**	30'	EL	**1.45**	0.80	0.283	1.58	30'	EL	14.5	
		HL-93(Opr)	N/A	--	1.344	--	1.35	0.283	2.38	30'	EL	14.5	0.574	1.34	30'	EL	1.45	N/A	--	--	--	--	--	
		HS-20(Inv)	36.000	2	1.183	42.587	1.75	0.283	2.53	30'	EL	11.6	0.574	**1.18**	30'	EL	**1.45**	0.80	0.283	2.20	30'	EL	11.6	
		HS-20(Opr)	36.000	--	1.533	55.205	1.35	0.283	3.28	30'	EL	11.6	0.574	1.53	30'	EL	1.45	N/A	--	--	--	--	--	
LEGAL LOAD RATING	SV	SNSH	13.500	--	2.895	39.081	1.40	0.283	5.18	30'	EL	14.5	0.574	2.89	30'	EL	1.45	0.80	0.283	3.56	30'	EL	14.5	
		SNGARBS2	20.000	--	2.240	44.792	1.40	0.283	4.53	30'	EL	11.6	0.574	2.24	30'	EL	1.45	0.80	0.283	3.15	30'	EL	11.6	
		SNAGRIS2	22.000	--	2.157	47.463	1.40	0.283	4.60	30'	EL	11.6	0.574	2.16	30'	EL	1.45	0.80	0.283	3.20	30'	EL	11.6	
		SNCOTTS3	27.250	--	1.462	39.849	1.40	0.283	2.60	30'	EL	14.5	0.574	1.46	30'	EL	1.45	0.80	0.283	1.79	30'	EL	14.5	
		SNAGGRS4	34.925	--	1.346	46.999	1.40	0.283	2.50	30'	EL	14.5	0.574	1.35	30'	EL	1.45	0.80	0.283	1.72	30'	EL	14.5	
		SNS5A	35.550	--	1.427	50.733	1.40	0.283	2.42	30'	EL	14.5	0.574	1.43	30'	EL	1.45	0.80	0.283	1.67	30'	EL	14.5	
		SNS6A	39.950	--	1.341	53.590	1.40	0.283	2.29	30'	EL	14.5	0.574	1.34	30'	EL	1.45	0.80	0.283	1.58	30'	EL	14.5	
		SNS7B	42.000	--	1.369	57.505	1.40	0.283	2.23	30'	EL	14.5	0.574	1.37	30'	EL	1.45	0.80	0.283	1.53	30'	EL	14.5	
	TTST	TNAGRIT3	33.000	--	1.593	52.580	1.40	0.283	2.97	30'	EL	14.5	0.574	1.59	30'	EL	1.45	0.80	0.283	2.04	30'	EL	14.5	
		TNT4A	33.075	--	1.483	49.043	1.40	0.283	2.82	30'	EL	14.5	0.574	1.48	30'	EL	1.45	0.80	0.283	1.94	30'	EL	14.5	
		TNT6A	41.600	--	1.433	59.622	1.40	0.283	2.56	30'	EL	14.5	0.574	1.43	30'	EL	1.45	0.80	0.283	1.76	30'	EL	14.5	
		TNT7A	42.000	--	1.363	57.264	1.40	0.283	2.64	30'	EL	14.5	0.574	1.36	30'	EL	1.45	0.80	0.283	1.82	30'	EL	14.5	
		TNT7B	42.000	--	1.331	55.915	1.40	0.283	2.49	30'	EL	14.5	0.574	1.33	30'	EL	1.45	0.80	0.283	1.72	30'	EL	14.5	
		TNAGRIT4	43.000	--	1.287	55.356	1.40	0.283	2.58	30'	EL	14.5	0.574	1.29	30'	EL	1.45	0.80	0.283	1.78	30'	EL	14.5	
		TNAGT5A	45.000	--	1.381	62.151	1.40	0.283	2.50	30'	EL	14.5	0.574	1.38	30'	EL	1.45	0.80	0.283	1.72	30'	EL	14.5	
		TNAGT5B	45.000	3	1.212	54.540	1.40	0.283	2.41	30'	EL	11.6	0.574	**1.21**	30'	EL	**1.45**	0.80	0.283	1.66	30'	EL	11.6	

LOAD FACTORS:

DESIGN LOAD RATING FACTORS	LIMIT STATE	γ_{DC}	γ_{DW}
	STRENGTH I	1.25	1.50
	SERVICE III	1.00	1.00

NOTES:

MINIMUM RATING FACTORS ARE BASED ON THE STRENGTH I AND SERVICE III LIMIT STATES.

ALLOWABLE STRESSES FOR SERVICE III LIMIT STATE ARE AS REQUIRED FOR DESIGN.

COMMENTS:

1.
2.
3.
4.

CONTROLLING LOAD RATING
1 DESIGN LOAD RATING (HL-93)
2 DESIGN LOAD RATING (HS-20)
3 LEGAL LOAD RATING **
** SEE CHART FOR VEHICLE TYPE

GIRDER LOCATION
I - INTERIOR GIRDER
EL - EXTERIOR LEFT GIRDER
ER - EXTERIOR RIGHT GIRDER

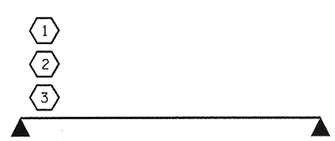

LRFR SUMMARY

FOR SPAN 'C'

PROJECT NO. BD-5104K

NASH COUNTY

STATION: 16+90.00 -L-

NORTH CAROLINA PROFESSIONAL SEAL 14045 ENGINEER TIMOTHY C. COGGINS

06/07/13

STATE OF NORTH CAROLINA
DEPARTMENT OF TRANSPORTATION
RALEIGH

STANDARD
LRFR SUMMARY FOR 30' CORED SLAB UNIT 90° SKEW
(NON-INTERSTATE TRAFFIC)

REVISIONS						SHEET NO.
NO.	BY:	DATE:	NO.	BY:	DATE:	4
1			3			TOTAL SHEETS
2			4			63

ASSEMBLED BY :	K. P. SEDAI	DATE : 5/29/13
CHECKED BY :	M. D. PISO	DATE : 5/30/13
DRAWN BY : CVC	6/10	
CHECKED BY : DNS	6/10	

07-JUN-2013 12:29
S:\DPG\Tim\Division 4 LIBR\BD-5104K\ksedai\NCBDS\BD-5104K_Plans.dgn
tcoggins

STD. NO. 21LRFR1_90S_30L

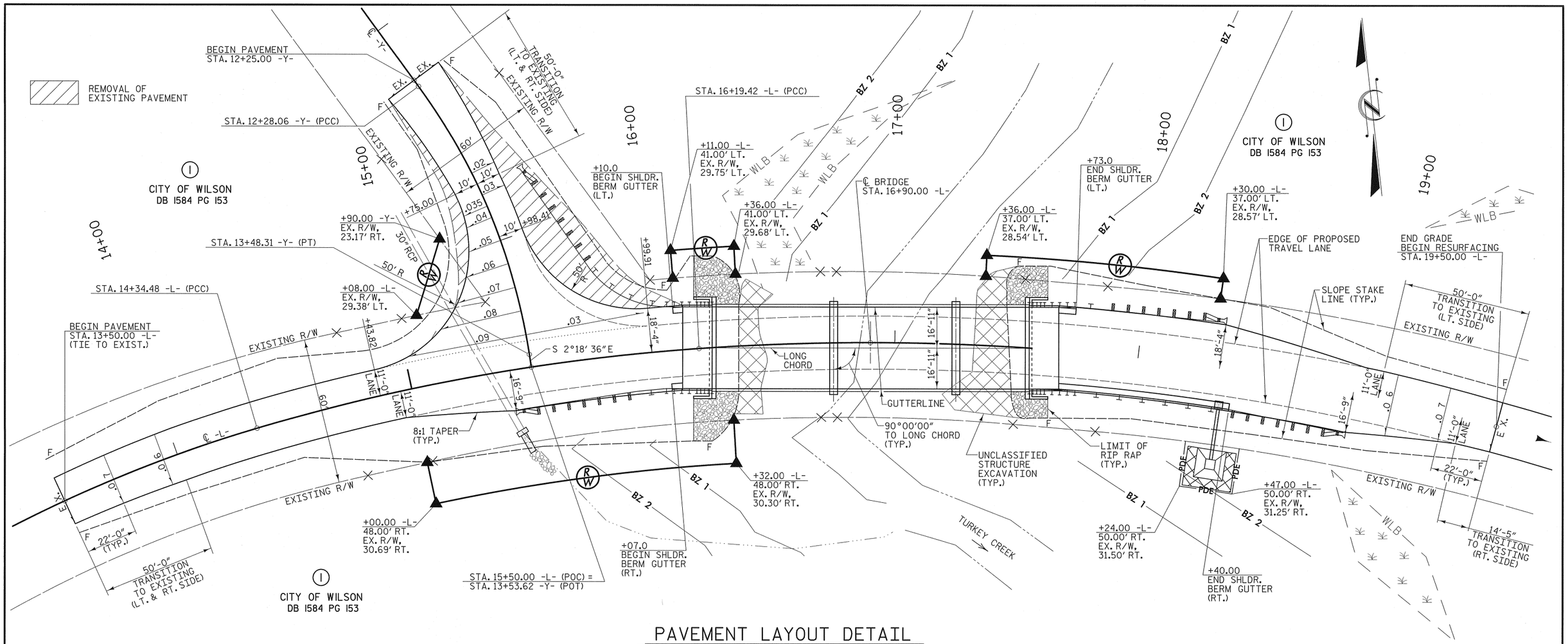

PAVEMENT LAYOUT DETAIL

SCALE: 1" = 20'

HORIZONTAL CURVE DATA

-L-

PI STA. 13+26.19	PI STA. 15+27.31	PI STA. 18+55.68
Δ = 21° 50' 52.5" (RT)	Δ = 12° 19' 17.1" (RT)	Δ = 27° 06' 32.0" (RT)
D = 9° 57' 52.1"	D = 6° 39' 44.3"	D = 5° 50' 47.4"
L = 219.26'	L = 184.94'	L = 463.68'
T = 110.98'	T = 92.83'	T = 236.26'
R = 575.00'	R = 860.00'	R = 980.00'

-Y-

PI STA. 11+53.61	PI STA. 12+89.37
Δ = 1° 09' 38.7" (RT)	Δ = 27° 33' 27.8" (RT)
D = 0° 46' 46.3"	D = 22° 55' 05.9"
L = 148.90'	L = 120.24'
T = 74.45'	T = 61.31'
R = 7,350.00'	R = 250.00'

DATUM DESCRIPTION

THE COORDINATE SYSTEM DEVELOPED FOR THIS PROJECT IS BASED ON THE STATE PLANE COORDINATES ESTABLISHED BY NCDOT FOR MONUMENT "GPS 630059-2" WITH NAD 1983/2007 STATE PLANE GRID COORDINATES OF NORTHING: 748532.9780(ft) EASTING: 2243317.0860(ft) ELEVATION: 177.64(ft)

GROUND DISTANCES IN FIELD WERE USED TO DETERMINE COORDINATES FOR "GPS 630059-1" AND "GPS 630059-3"

LOCALIZED HORIZONTAL GROUND DISTANCE FROM "GPS 630059-2" TO -L- STATION 14+34.48 IS N 88° 39' 17.5" E 186.11'

VERTICAL DATUM USED IS NAVD 88

NOTE:

RESURFACE EXISTING PAVEMENT FROM STA. 19+50.00 -L- TO STA. 21+10.00 W/ 2" SF9.5A

PROJECT NO. BD-5104K

NASH COUNTY

STATION: 16+90.00 -L-

REPLACES BRIDGE NO. 59 SHEET 1 OF 2

PI = 12+50.00
EL = 178.82'
VC = 50'
K = 25
D.S. = 20 mph

(+)1.2442% △ (+)3.2089%

PI = 13+25.00
EL = 181.23'
VC = 30'
K = 7
D.S. = 20 mph

(+)3.2089% △ (-)1.0000%

GRADE DATA
-Y- (SR 1126)

RIGHT OF WAY AREA DATA

PARCEL NO.	PROPERTY OWNERS NAMES	TOTAL AREA	AREA TAKEN	AREA REMAINING	CONST. EASE.	PERM. DRAIN. EASE.	TEMP. DRAIN. EASE.
1	CITY OF WILSON	539.21 AC	3436 SF	539.13 AC		411 SF	

NORTH CAROLINA PROFESSIONAL SEAL 19661 ENGINEER L. KEVIN AUSTIN 7/2/13

PLANS PREPARED BY:

MULKEY ENGINEERS & CONSULTANTS
PO Box 33127 RALEIGH, N.C. 27636
(919) 851-1912 (919) 851-1918 (FAX)
WWW.MULKEYINC.COM
NC LICENSE NO. C-1021

STATE OF NORTH CAROLINA
DEPARTMENT OF TRANSPORTATION
RALEIGH

ROADWAY DETAILS

33'-10" CLEAR ROADWAY - 90° SKEW

REVISIONS						SHEET NO.
NO.	BY:	DATE:	NO.	BY:	DATE:	5
1			3			TOTAL SHEETS
2			4			63

DRAWN BY : W. B. ALLEN DATE : 3/13
CHECKED BY : L. K. AUSTIN DATE : 4/13

7/2/2013 12:25:48 PM R:\Structures\BD5104K_SD_03.dgn

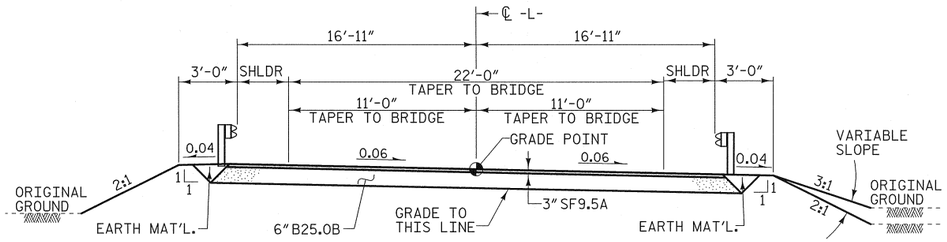

FULL DEPTH PAVEMENT

FROM -L- STA. 15+25 TO BEGIN BRIDGE
FROM END BRIDGE TO -L- STA. 18+00

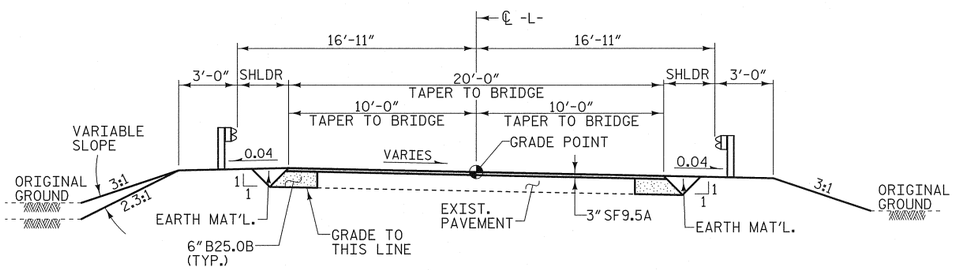

WIDENING PAVEMENT

FROM -L- STA. 13+50.00 TO -L- STA. 15+25
FROM -L- STA. 18+00 TO -L- STA. 19+50.00

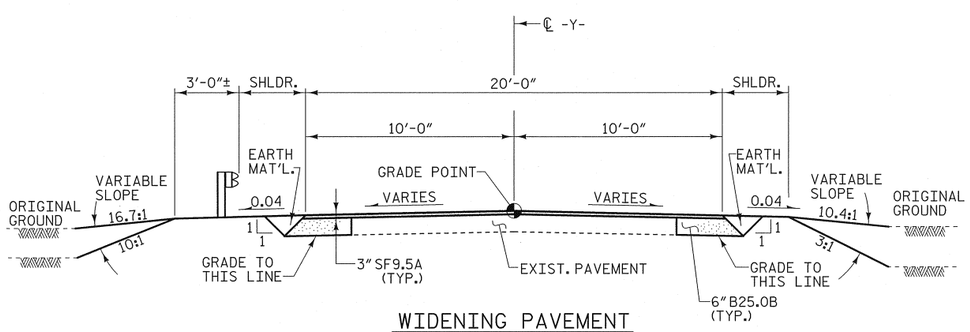

WIDENING PAVEMENT

FROM -Y- STA. 12+25.00 TO -Y- STA. 13+42.62

TYPICAL ROADWAY SECTION

WITHIN CONSTRUCTION LIMITS

PREFORMED SCOUR HOLE

*NOT TO SCALE

PLAN VIEW

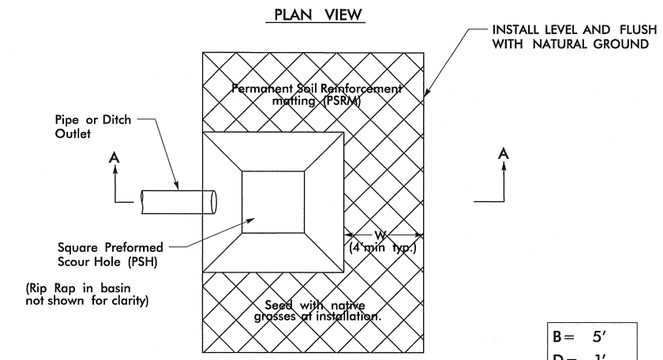

B =	5'
D =	1'
W =	4'

SECTION A-A

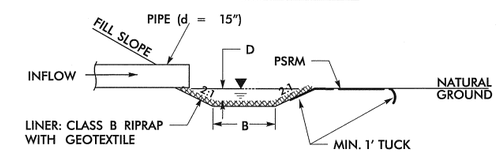

3/08

STA. 18+35+/- RT

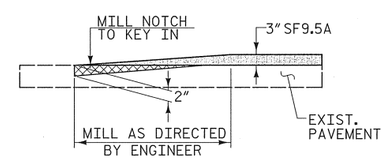

MILLING DETAIL

MILL EXISTING PAVEMENT AT THE FOLLOWING LOCATIONS
-L- STA. 13+50.00 TO STA. 14+15+/-
-Y- STA. 12+25.00 TO STA. 12+57+/-

PROJECT NO. BD-5104K
NASH COUNTY
STATION: 16+90.00 -L-

REPLACES BRIDGE NO. 59 SHEET 2 OF 2

STATE OF NORTH CAROLINA
DEPARTMENT OF TRANSPORTATION
RALEIGH

ROADWAY DETAILS

33'-10" CLEAR ROADWAY - 90° SKEW

NORTH CAROLINA PROFESSIONAL SEAL 19661 ENGINEER L. KEVIN AUSTIN 7/2/13

PLANS PREPARED BY:

MULKEY ENGINEERS & CONSULTANTS
PO Box 33127
RALEIGH, N.C. 27636
(919) 851-1912
(919) 851-1918 (FAX)
WWW.MULKEYINC.COM
NC LICENSE NO. C-1021

REVISIONS						SHEET NO.
NO.	BY:	DATE:	NO.	BY:	DATE:	6
1			3			TOTAL SHEETS
2			4			63

DRAWN BY :	W. B. ALLEN	DATE :	3/13
CHECKED BY :	L. K. AUSTIN	DATE :	4/13

7/2/2013 12:26:00 PM R:\Structures\BD5104K_SD_GD_04.dgn

0 2.5 5	PROJ. REFERENCE NO.	SHEET NO.
	BD-5104K	7

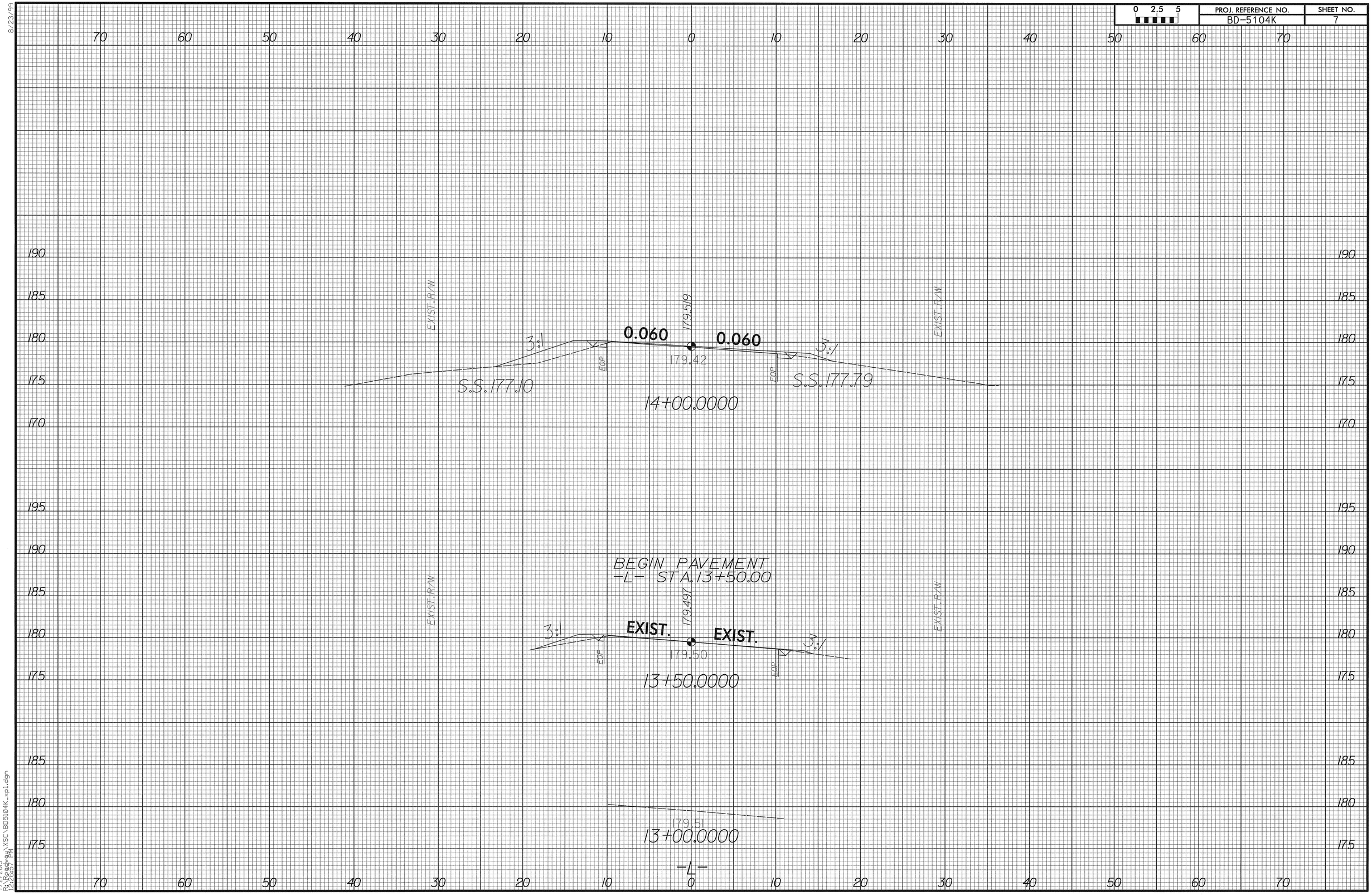

8/23/99

7/2/2013
R:\Roadway\XSC\BD5104K_xpi.dgn
12:26:57 PM

0 2.5 5	PROJ. REFERENCE NO.	SHEET NO.
	BD-5104K	8

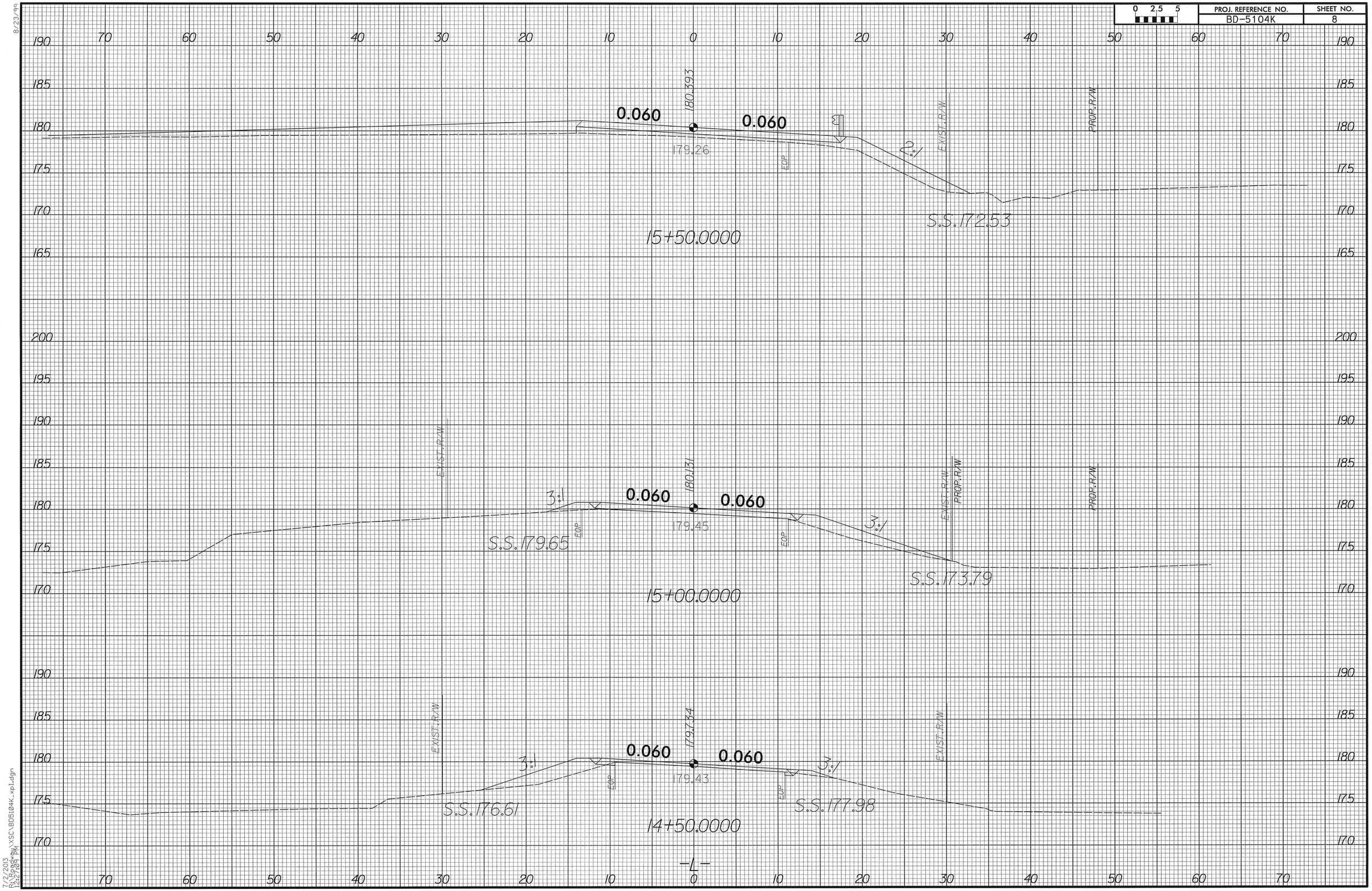

8/23/99

7/2/2013
12:29:38 PM
R:\Projects\XSC\BD5104K_xpl.dgn

0 2.5 5	PROJ. REFERENCE NO.	SHEET NO.
	BD-5104K	9

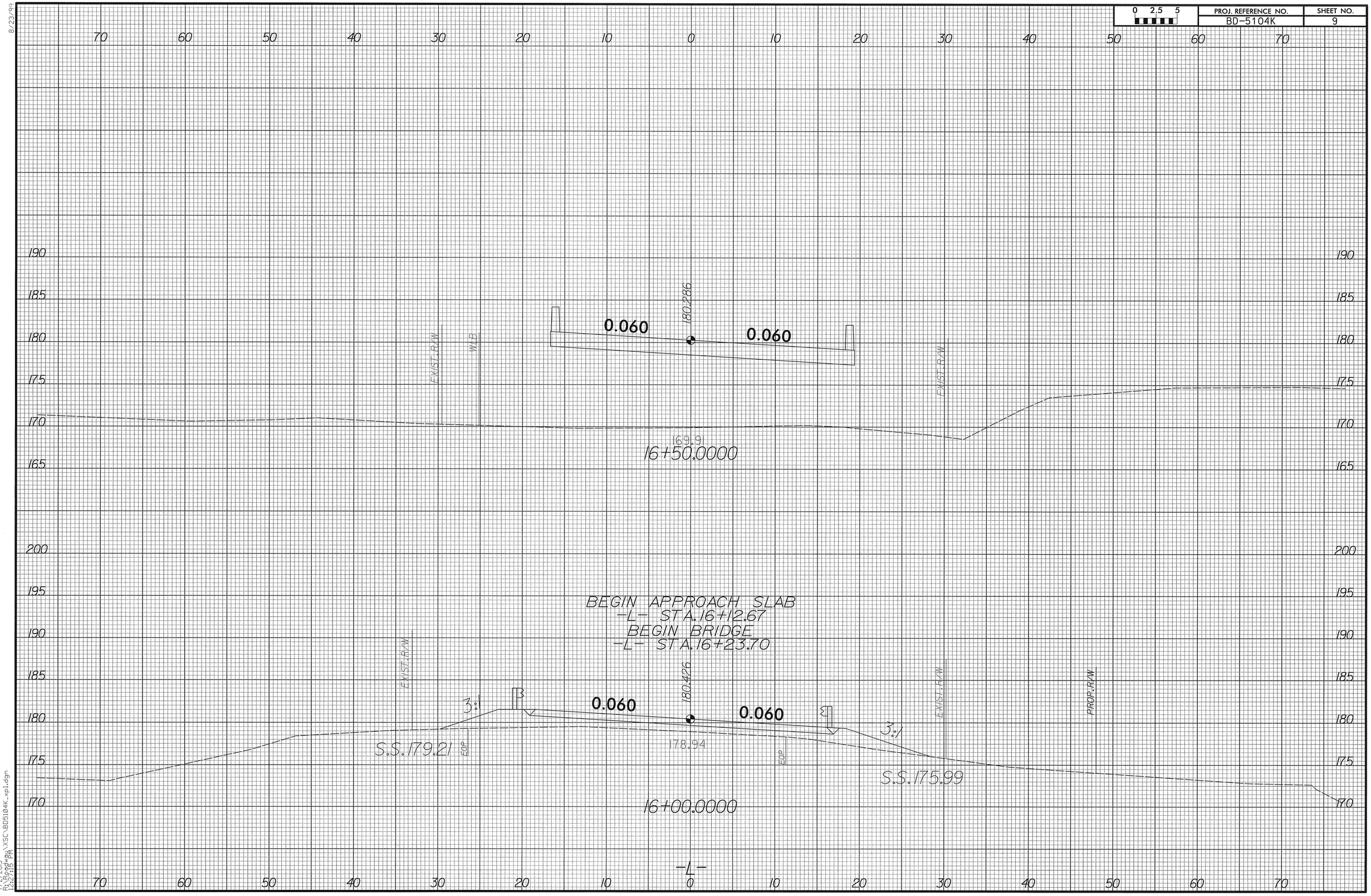

8/23/99

7/2/2013
13:16:08
R:\Roadway\XSC\BD5104K_xpl.dgn
12:21:13 PM

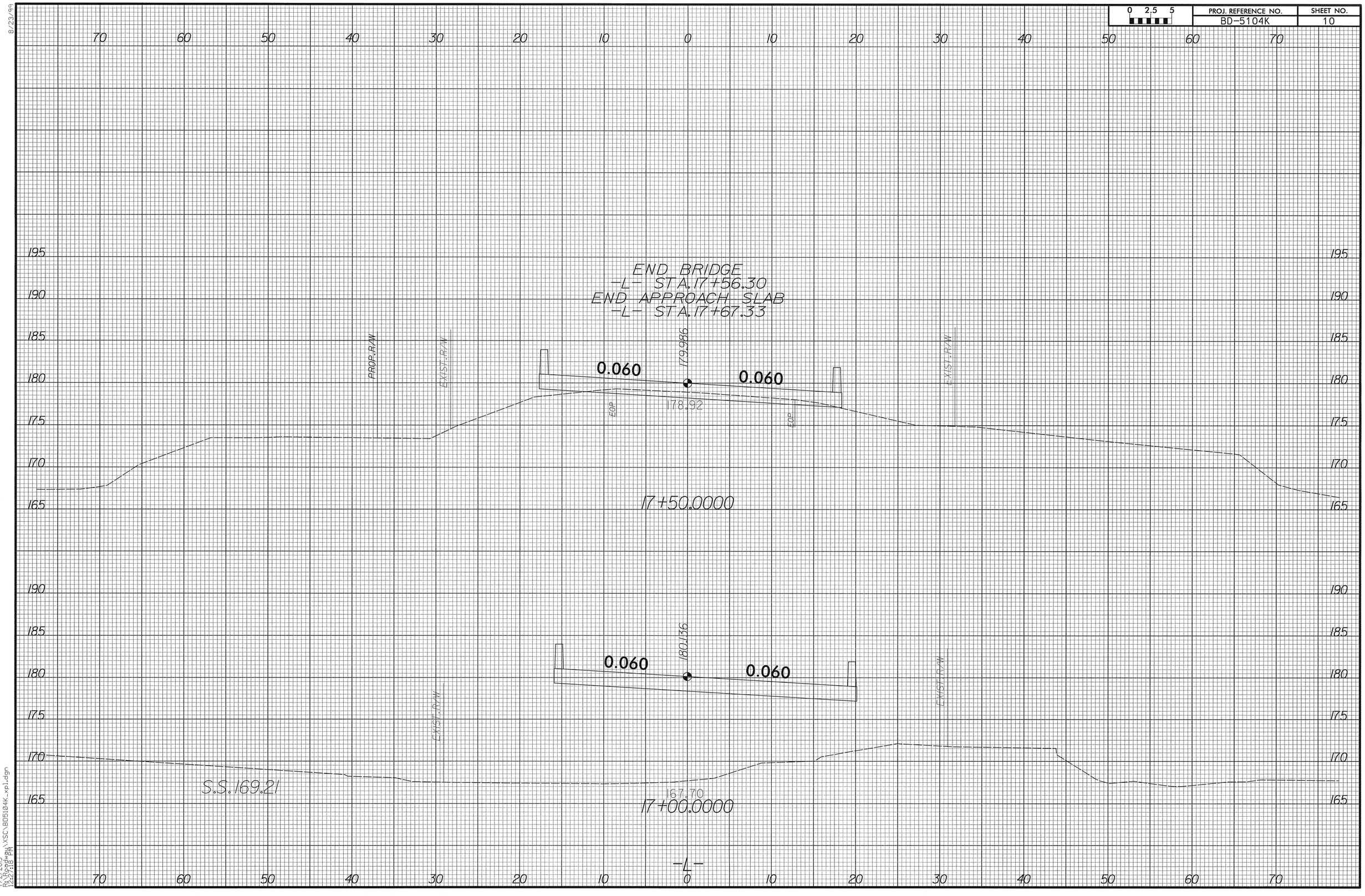

8/23/99

7/2/2013
12:22:18 PM
R:\Roadway\XSC\BD5104K_xpl.dgn

0 2.5 5	PROJ. REFERENCE NO.	SHEET NO.
	BD-5104K	11

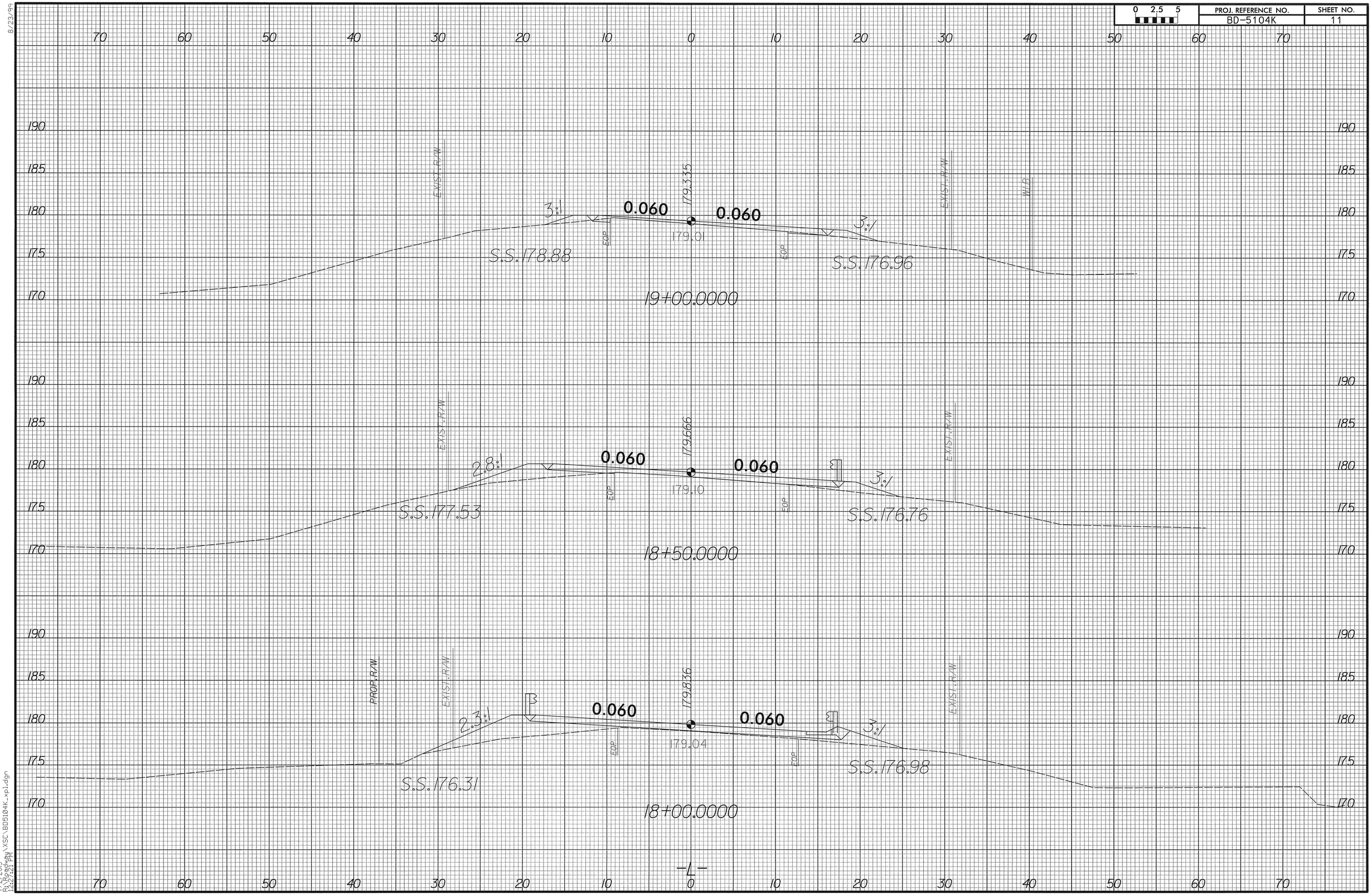

8/23/99

7/2/2013
R:\Roadway\XSC\BD5104K_xpl.dgn
2:27:21 PM

8/23/99

0 2.5 5	PROJ. REFERENCE NO.	SHEET NO.
	BD-5104K	12

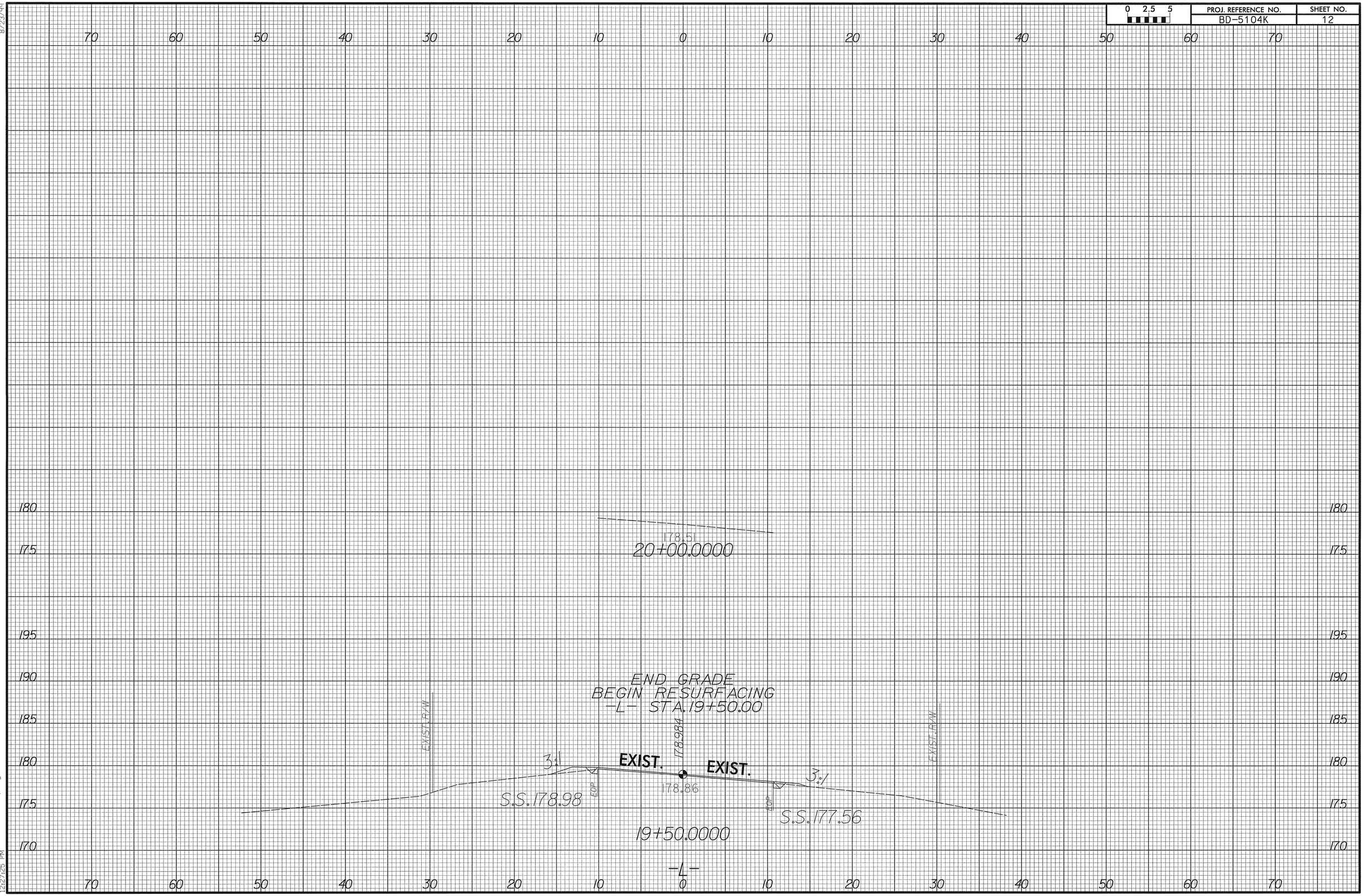

7/2/2013
R:\Roadway\XSC\BD5104K_xpl.dgn
12:27:25 PM

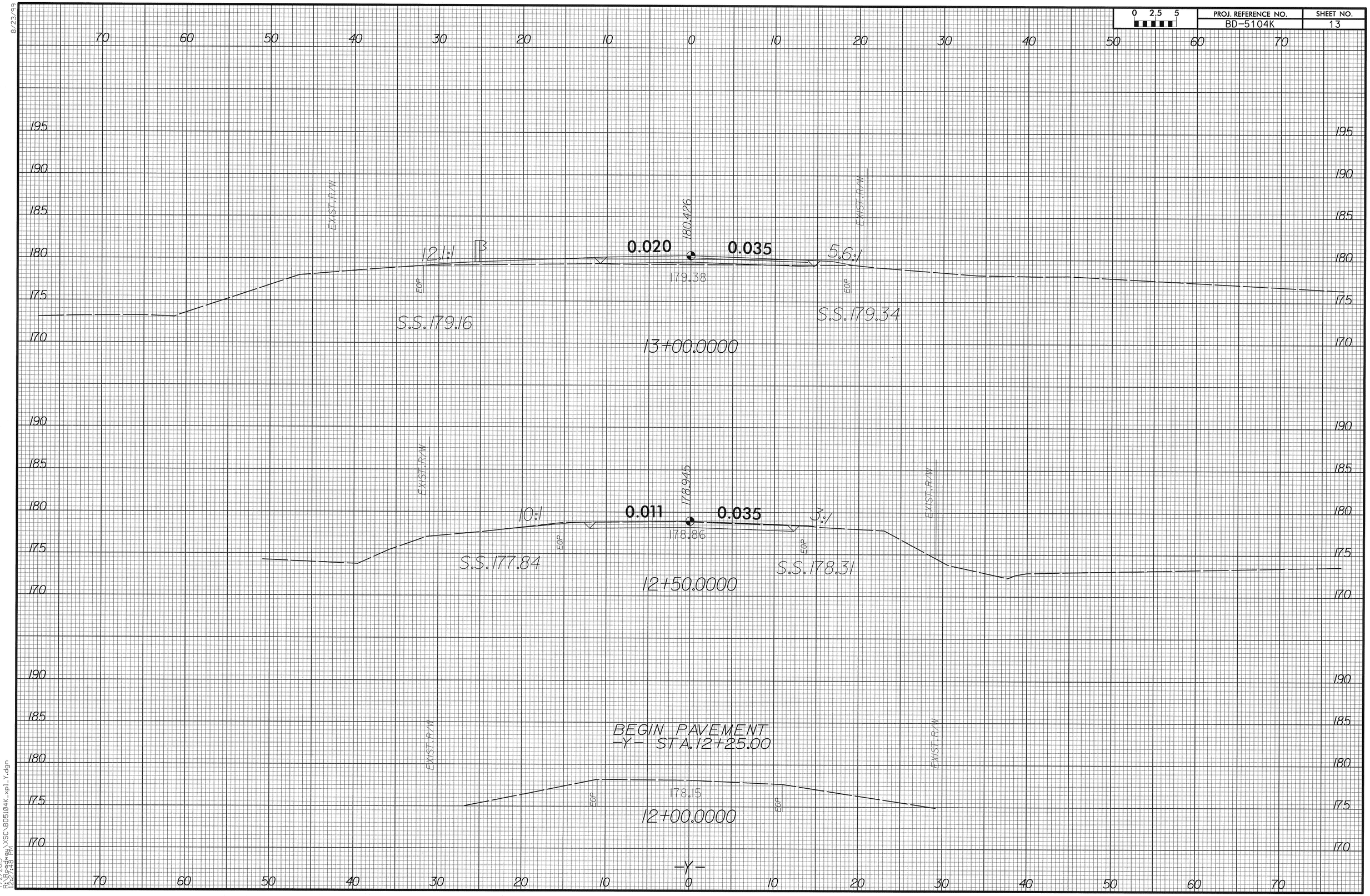

8/23/99

7/2/2013
R:\Active\Proj\XSC\BD5104K_xpl_Y.dgn
12:27:48 PM

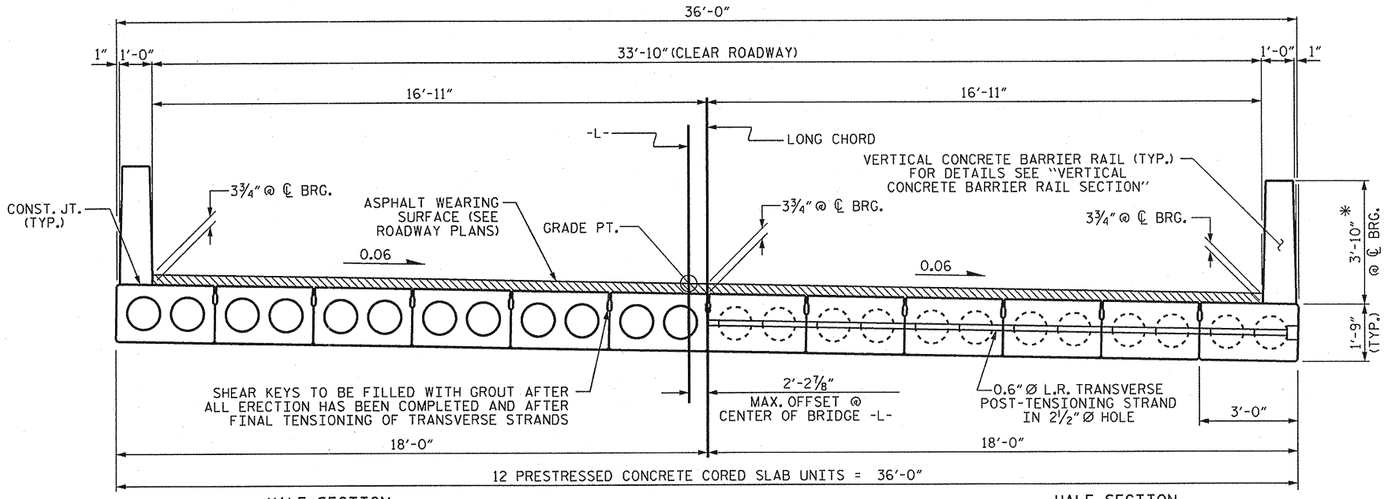

HALF SECTION
AT INTERMEDIATE DIAPHRAGMS

HALF SECTION
THROUGH VOIDS

TYPICAL SECTION

* - THE MAXIMUM BARRIER RAIL HEIGHT AND ASPHALT THICKNESS IS SHOWN. THE HEIGHT OF THE BARRIER RAIL AND ASPHALT THICKNESS VARIES WHILE THE TOP OF THE BARRIER RAIL FOLLOWS THE PROFILE OF THE GUTTERLINE. FOR RAIL HEIGHT DETAILS AND ASPHALT THICKNESS SEE THE "VERTICAL CONCRETE BARRIER RAIL SECTION" DETAIL.

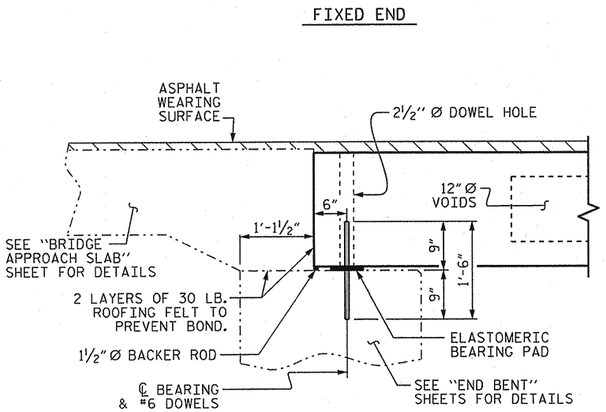

SECTION AT END BENT

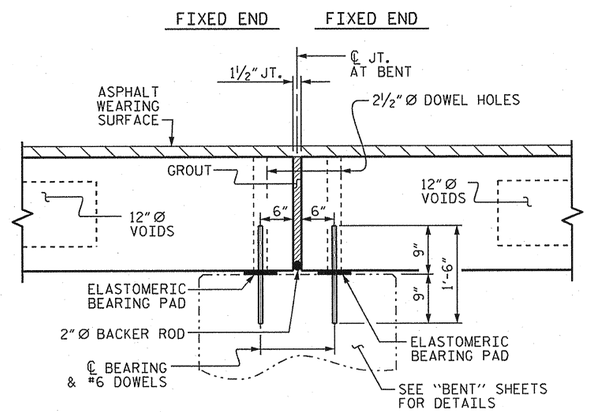

SECTION AT BENT

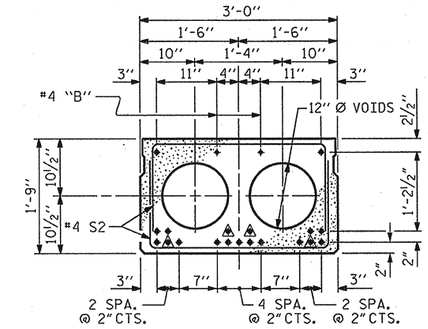

INTERIOR SLAB SECTION
(50' UNIT)
(19 STRANDS REQUIRED)

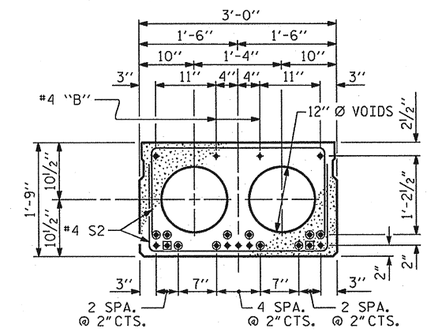

INTERIOR SLAB SECTION
(30' UNIT)
(9 STRANDS REQUIRED)

0.6" Ø LOW RELAXATION STRAND LAYOUT

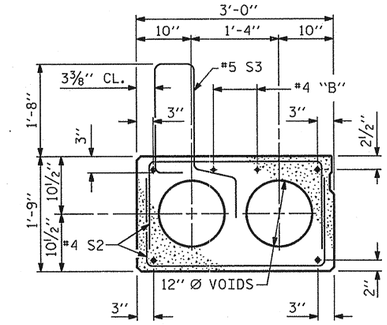

EXT. SLAB SECTION

(FOR PRESTRESSED STRAND LAYOUT, SEE INTERIOR SLAB SECTION.)

▲ BOND SHALL BE BROKEN ON THESE STRANDS FOR A DISTANCE OF 6'-0" FROM END OF CORED SLAB UNIT. SEE STANDARD SPECIFICATIONS, ARTICLE 1078-7.

◉ BOND SHALL BE BROKEN ON THESE STRANDS FOR A DISTANCE OF 2'-0" FROM END OF CORED SLAB UNIT. SEE STANDARD SPECIFICATIONS, ARTICLE 1078-7.

◉ OPTIONAL FULL LENGTH DEBONDED STRANDS. THESE STRANDS ARE NOT REQUIRED. IF THE FABRICATOR CHOOSES TO INCLUDE THESE STRANDS IN THE CORED SLAB UNIT, THE STRANDS SHALL BE DEBONDED FOR THE FULL LENGTH OF THE UNIT AT NO ADDITIONAL COST. SEE STANDARD SPECIFICATIONS, ARTICLE 1078-7.

DEBONDING LEGEND

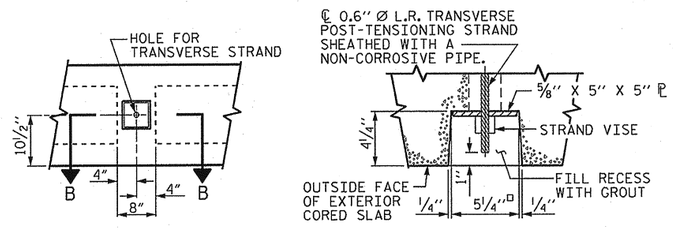

ELEVATION VIEW

SECTION B-B

GROUTED RECESS AT END OF POST-TENSIONED STRAND OF CORED SLABS

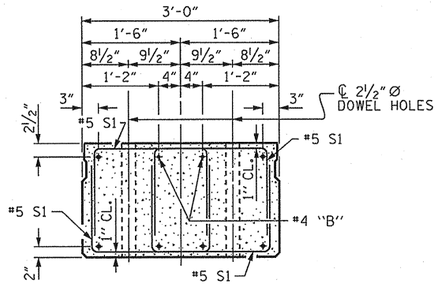

END ELEVATION

SHOWING PLACEMENT OF DOUBLE STIRRUPS AND LOCATION OF DOWEL HOLES. (STRAND LAYOUT NOT SHOWN.) INTERIOR SLAB UNIT SHOWN-EXTERIOR SLAB UNIT SIMILAR EXCEPT SHEAR KEY LOCATION.

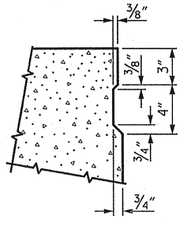

SHEAR KEY DETAIL

NOTE: OMIT SHEAR KEY ON OUTSIDE FACE OF EXTERIOR CORED SLABS.

NORTH CAROLINA PROFESSIONAL SEAL 14045 ENGINEER TIMOTHY L. COGGINS
06/26/13

PROJECT NO. BD-5104K
NASH COUNTY
STATION: 16+90.00 -L-

SHEET 1 OF 6

STATE OF NORTH CAROLINA
DEPARTMENT OF TRANSPORTATION
RALEIGH

STANDARD
3'-0" X 1'-9"
PRESTRESSED CONCRETE
CORED SLAB UNIT
90° SKEW

REVISIONS								SHEET NO.
NO.	BY:	DATE:	NO.	BY:	DATE:			14
1			3					TOTAL SHEETS
2			4					63

ASSEMBLED BY : K. P. SEDAI	DATE : 5/24/13	
CHECKED BY : M. D. PISO	DATE : 5/30/13	
DRAWN BY : DGE 5/09	REV. 12/11	MAA/AAC
CHECKED BY : BCH 6/09		

26-JUN-2013 14:16
S:\DPG1\Tim\Division 4 LIBR\BD-5104K\ksedai\NCBDS\BD-5104K_Plans.dgn
tcoggins

STD. NO. 21" PCS2_36_90S

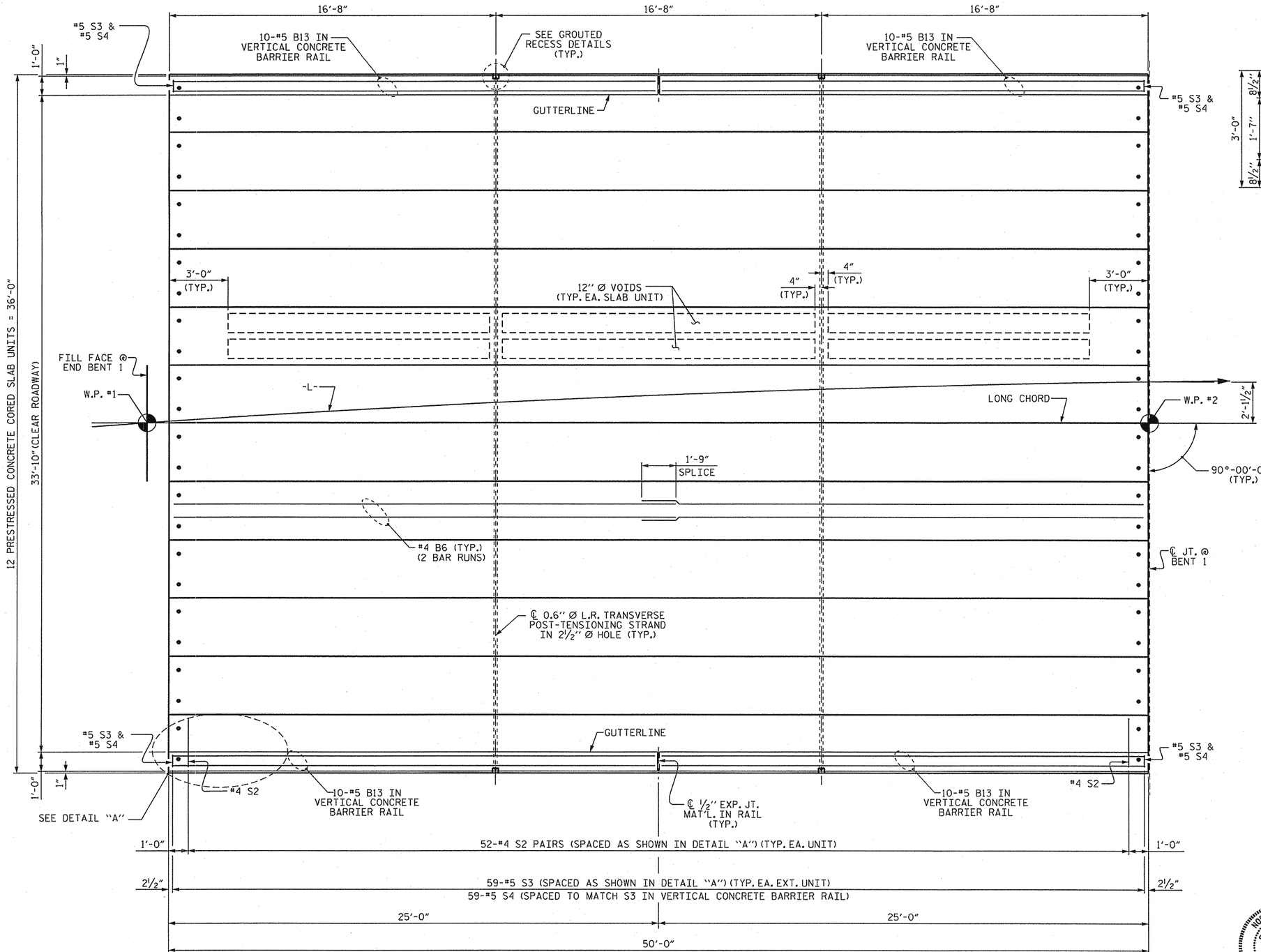

PLAN OF UNIT

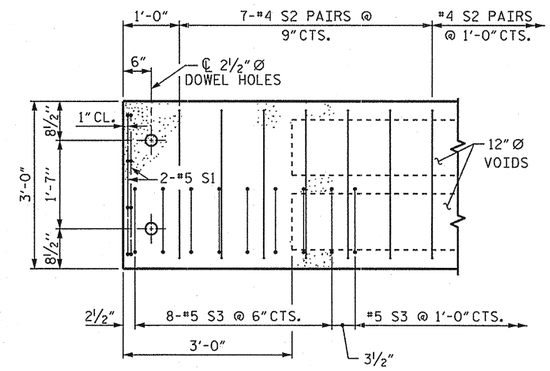

DETAIL "A"

NOTE: EXTERIOR UNIT SHOWN - INTERIOR UNIT SIMILAR EXCEPT OMIT #5 S3 BARS.

PROJECT NO. BD-5104K

NASH COUNTY

STATION: 16+90.00 -L-

SHEET 2 OF 6

STATE OF NORTH CAROLINA
DEPARTMENT OF TRANSPORTATION
RALEIGH

PLAN OF 50' UNIT
33'-10" CLEAR ROADWAY
90° SKEW
SPAN A

NORTH CAROLINA PROFESSIONAL SEAL 14045 ENGINEER TIMOTHY L. COGGINS
06/26/13

REVISIONS						SHEET NO.
NO.	BY:	DATE:	NO.	BY:	DATE:	15
1			3			TOTAL SHEETS
2			4			63

ASSEMBLED BY : K. P. SEDAI		DATE : 5/24/13	
CHECKED BY : M. D. PISO		DATE : 6/3/13	
DRAWN BY : DGE 5/09	REV. 12/5/11 MAA/AAC		
CHECKED BY: BCH 6/09			

26-JUN-2013 14:16
S:\DPG1\Tim\Division 4 LIBR\BD-5104K\ksedai\NCBDS\BD-5104K_Plans.dgn
tcoggins

STD. NO. 21" PCS_36_90S_50L

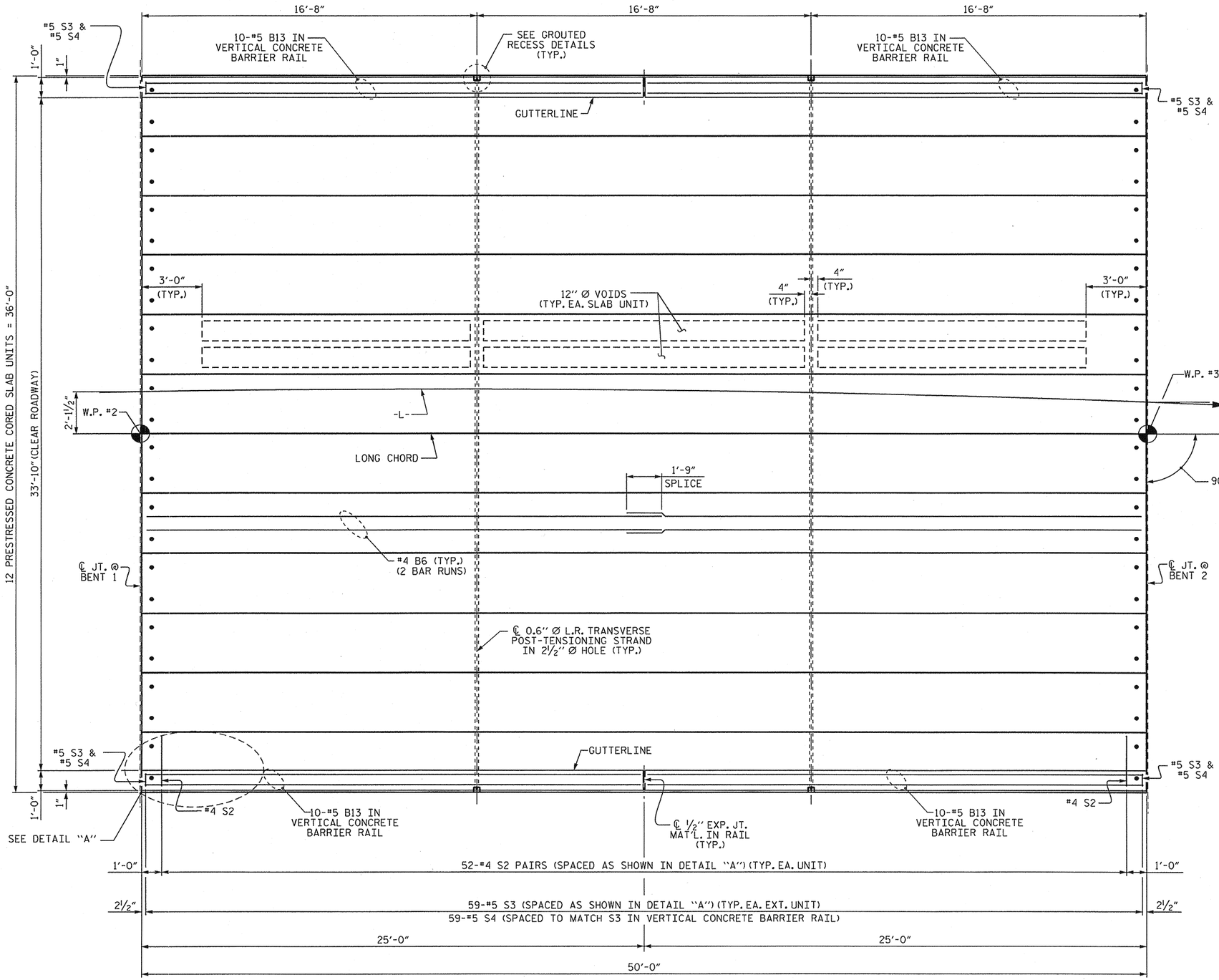

PLAN OF UNIT

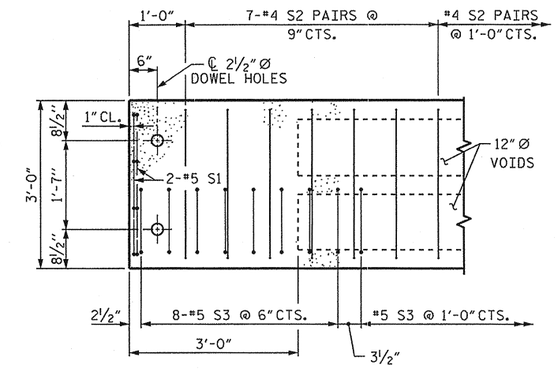

DETAIL "A"

NOTE: EXTERIOR UNIT SHOWN - INTERIOR UNIT SIMILAR EXCEPT OMIT #5 S3 BARS.

PROJECT NO. BD-5104K

NASH COUNTY

STATION: 16+90.00 -L-

SHEET 3 OF 6

STATE OF NORTH CAROLINA
DEPARTMENT OF TRANSPORTATION
RALEIGH

PLAN OF 50' UNIT
33'-10" CLEAR ROADWAY
90° SKEW
SPAN B

NORTH CAROLINA PROFESSIONAL SEAL 14045 ENGINEER TIMOTHY L. COGGINS
06/26/13

REVISIONS						SHEET NO.
NO.	BY:	DATE:	NO.	BY:	DATE:	16
1			3			TOTAL SHEETS
2			4			63

ASSEMBLED BY : K. P. SEDAI		DATE : 5/24/13	
CHECKED BY : M. D. PISO		DATE : 6/3/13	
DRAWN BY : DGE	5/09	REV. 12/5/11	MAA/AAC
CHECKED BY: BCH	6/09		

26-JUN-2013 14:16
S:\DPG\Tim\Division 4 LIBR\BD-5104K\ksedal\NCBDS\BD-5104K_Plans.dgn
tcoggins

STD. NO. 21" PCS_36_90S_50L

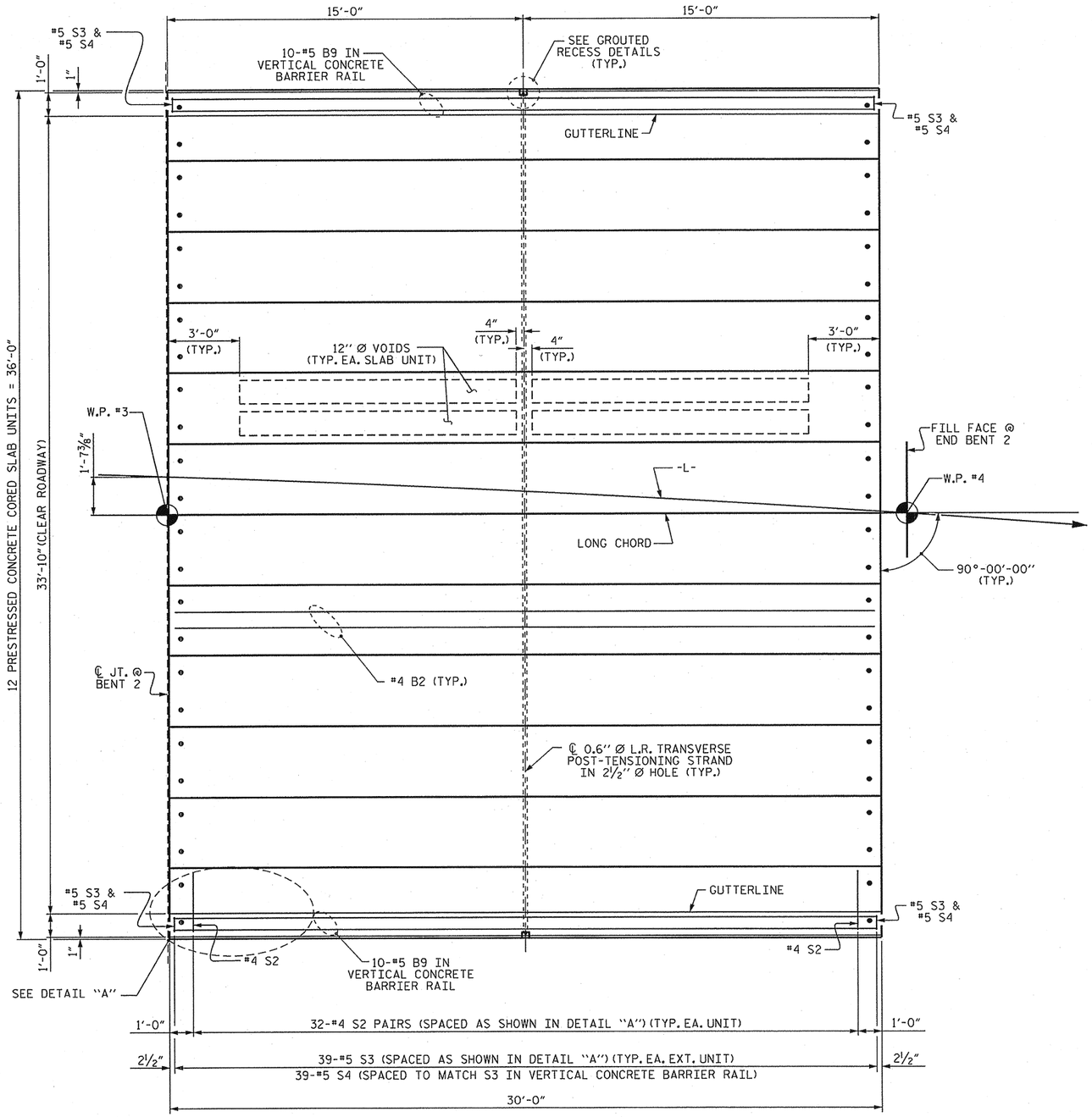

PLAN OF UNIT

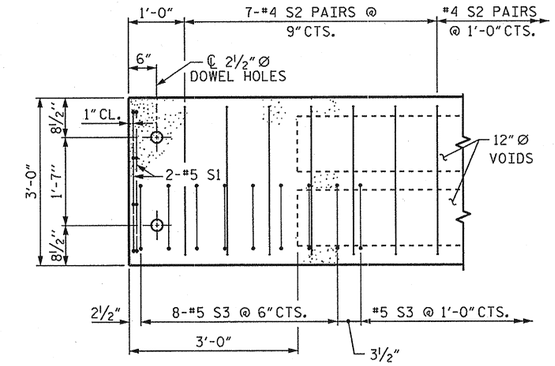

DETAIL "A"

NOTE: EXTERIOR UNIT SHOWN - INTERIOR UNIT SIMILAR EXCEPT OMIT #5 S3 BARS.

PROJECT NO. BD-5104K

NASH COUNTY

STATION: 16+90.00 -L-

SHEET 4 OF 6

STATE OF NORTH CAROLINA
DEPARTMENT OF TRANSPORTATION
RALEIGH

PLAN OF 30' UNIT
33'-10" CLEAR ROADWAY
90° SKEW
SPAN C

NORTH CAROLINA PROFESSIONAL SEAL 14045 ENGINEER TIMOTHY L. COGGINS
06/24/13

REVISIONS						SHEET NO.
NO.	BY:	DATE:	NO.	BY:	DATE:	17
1			3			TOTAL SHEETS
2			4			63

ASSEMBLED BY : K. P. SEDAI		DATE : 5/24/13	
CHECKED BY : M. D. PISO		DATE : 6/3/13	
DRAWN BY : DGE 5/09	REV. 12/5/11 MAA/AAC		
CHECKED BY: BCH 6/09			

26-JUN-2013 14:17
S:\DPGI\Tim\Division 4 LIBR\BD-5104K\ksedai\NCBDS\BD-5104K_Plans.dgn
tcoggins

STD. NO. 21" PCS_36_90S_30L

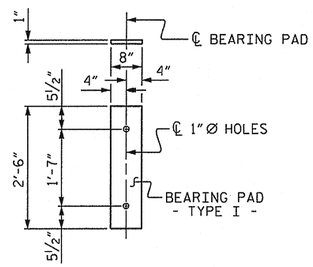

FIXED END
(TYPE I - 72 REQ'D.)

ELASTOMERIC BEARING DETAILS

ELASTOMER IN ALL BEARINGS SHALL BE 50 DUROMETER HARDNESS.

GRADE 270 STRANDS	
	0.6"Ø L.R.
AREA (SQUARE INCHES)	0.217
ULTIMATE STRENGTH (LBS. PER STRAND)	58,600
APPLIED PRESTRESS (LBS. PER STRAND)	43,950

BAR TYPES

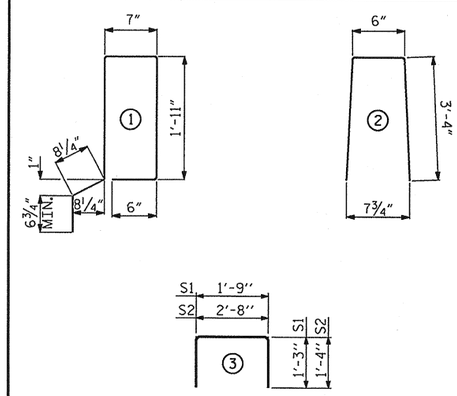

ALL BAR DIMENSIONS ARE OUT TO OUT

NOTES

ALL PRESTRESSING STRANDS SHALL BE 7-WIRE LOW RELAXATION GRADE 270 STRANDS AND SHALL CONFORM TO AASHTO M203 EXCEPT FOR SAMPLING REQUIREMENTS WHICH SHALL BE IN ACCORDANCE WITH THE STANDARD SPECIFICATIONS.

ALL REINFORCING STEEL CAST WITH THE CORED SLAB SECTIONS SHALL BE GRADE 60 AND SHALL BE INCLUDED IN THE UNIT PRICE BID FOR PRESTRESSED CONCRETE CORED SLABS.

RECESSES FOR TRANSVERSE STRANDS SHALL BE GROUTED AFTER THE TENSIONING OF THE STRANDS.

THE 2½"Ø DOWEL HOLES AT FIXED ENDS OF SLAB SECTIONS SHALL BE FILLED WITH NON-SHRINK GROUT.

THE BACKER RODS SHALL CONFORM TO THE REQUIREMENTS OF TYPE M BOND BREAKER. SEE SECTION 1028 OF THE STANDARD SPECIFICATIONS.

WHEN CORED SLABS ARE CAST, AN INTERNAL HOLD-DOWN SYSTEM SHALL BE EMPLOYED TO PREVENT VOIDS FROM RISING OR MOVING SIDEWAYS. AT LEAST SIX WEEKS PRIOR TO CASTING CORED SLABS, THE CONTRACTOR SHALL SUBMIT TO THE ENGINEER FOR REVIEW AND COMMENT, DETAILED DRAWINGS OF THE PROPOSED HOLD-DOWN SYSTEM. IN ADDITION TO STRUCTURAL DETAILS, LOCATION AND SPACING OF THE HOLD-DOWNS SHALL BE INDICATED.

ALL REINFORCING STEEL IN THE VERTICAL CONCRETE BARRIER RAIL SHALL BE EPOXY COATED.

PRESTRESSING STRANDS SHALL BE CUT FLUSH WITH THE CORED SLAB UNIT ENDS.

APPLY EPOXY PROTECTIVE COATING TO CORED SLAB UNIT ENDS.

GROOVED CONTRACTION JOINTS, ½" IN DEPTH, SHALL BE TOOLED IN ALL EXPOSED FACES OF THE BARRIER RAIL AND IN ACCORDANCE WITH ARTICLE 825-10(B) OF THE STANDARD SPECIFICATIONS. A CONTRACTION JOINT SHALL BE LOCATED AT EACH THIRD POINT BETWEEN BARRIER RAIL EXPANSION JOINTS. ONLY ONE CONTRACTION JOINT IS REQUIRED AT MIDPOINT OF BARRIER RAIL SEGMENTS LESS THAN 20 FEET IN LENGTH AND NO CONTRACTION JOINTS ARE REQUIRED FOR THOSE SEGMENTS LESS THAN 10 FEET IN LENGTH.

TRANSVERSE POST TENSIONING OF THE CORED SLAB UNITS SHALL BE DONE IN ACCORDANCE WITH THE STANDARD SPECIFICATIONS.

THE TRANSFER OF LOAD FROM THE ANCHORAGES TO THE CORED SLAB UNIT SHALL BE DONE WHEN THE CONCRETE HAS REACHED A COMPRESSIVE STRENGTH OF NOT LESS THAN THE REQUIRED STRENGTH SHOWN IN THE "CONCRETE RELEASE STRENGTH" TABLE.

FOR GROUT FOR STRUCTURES, SEE SPECIAL PROVISIONS.

BILL OF MATERIAL FOR VERTICAL CONCRETE BARRIER RAIL

BAR	BARS PER PAIR OF EXTERIOR UNITS 50' UNIT	TOTAL NO.	SIZE	TYPE	LENGTH	WEIGHT
*B13	40	80	#5	STR	24'-7"	2051
* S4	118	236	#5	2	7'-2"	1764
* EPOXY COATED REINFORCING STEEL				LBS.		3815
CLASS AA CONCRETE				CU.YDS.		26.2
TOTAL VERTICAL CONCRETE BARRIER RAIL				LN. FT.		200.38

BILL OF MATERIAL FOR VERTICAL CONCRETE BARRIER RAIL

BAR	BARS PER PAIR OF EXTERIOR UNITS 30' UNIT	TOTAL NO.	SIZE	TYPE	LENGTH	WEIGHT
* B9	20	20	#5	STR	29'-7"	617
* S4	78	78	#5	2	7'-2"	583
* EPOXY COATED REINFORCING STEEL				LBS.		1200
CLASS AA CONCRETE				CU.YDS.		7.9
TOTAL VERTICAL CONCRETE BARRIER RAIL				LN. FT.		60.12

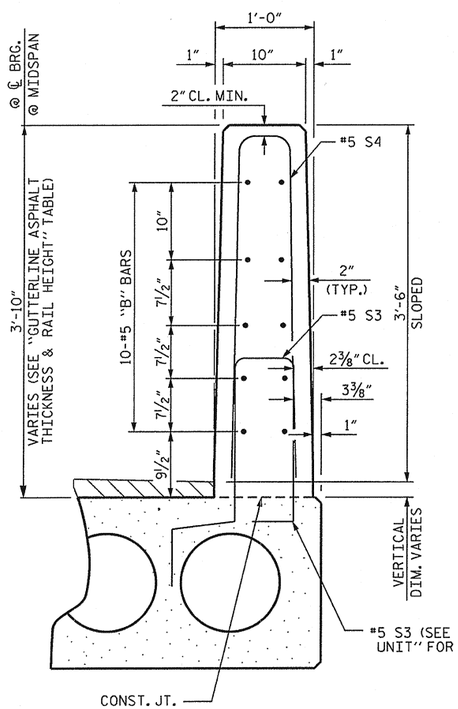

VERTICAL CONCRETE BARRIER RAIL SECTION

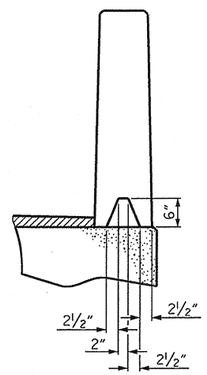

SECTION S-S
AT DAM IN OPEN JOINT
(THIS IS TO BE USED ONLY WHEN SLIP FORM IS USED)

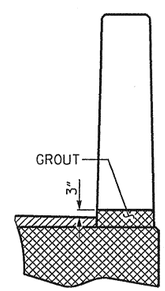

SECTION T-T
AT OPEN JOINT AT BENT
(THIS IS TO BE USED WHERE FOAM JOINT IS NOT USED)

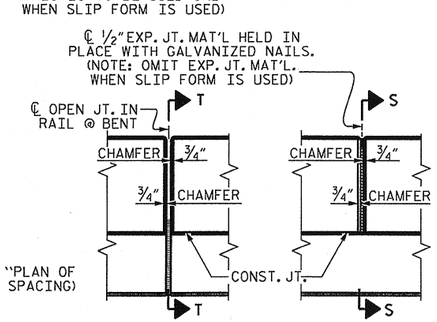

ELEVATION AT EXPANSION JOINTS

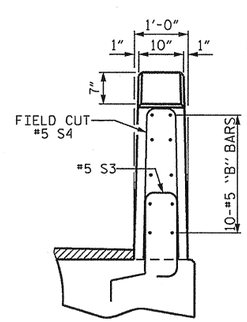

END VIEW

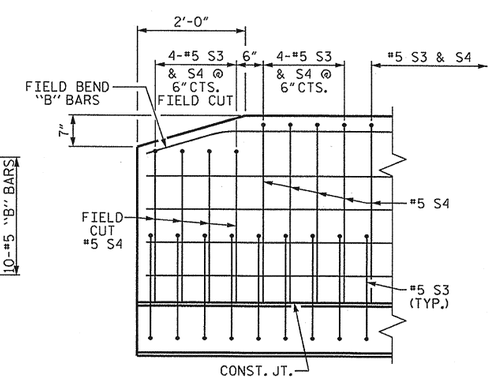

SIDE VIEW

END OF RAIL DETAILS

PROJECT NO. BD-5104K
NASH COUNTY
STATION: 16+90.00 -L-

SHEET 5 OF 6

STATE OF NORTH CAROLINA
DEPARTMENT OF TRANSPORTATION
RALEIGH

STANDARD
3'-0" X 1'-9"
PRESTRESSED CONCRETE
CORED SLAB UNIT
90° SKEW

NORTH CAROLINA PROFESSIONAL SEAL 14045 ENGINEER TIMOTHY A. COGGINS
06/07/13

ASSEMBLED BY : K. P. SEDAI	DATE : 5/24/13
CHECKED BY : M. D. PISO	DATE : 5/30/13
DRAWN BY : DGE 5/09	REV. 12/11 MAA/AAC
CHECKED BY : BCH 6/09	

REVISIONS								SHEET NO.
NO.	BY:	DATE:	NO.	BY:	DATE:			18
1			3					TOTAL SHEETS
2			4					63

07-JUN-2013 12:27
S:\DPGI\Tim\Division 4 LIBR\BD-5104K\ksedai\NCBDS\BD-5104K_Plans.dgn
tcoggins

STD. NO. 21"PCS3_36_90S

CORED SLABS REQUIRED

	NUMBER	LENGTH	TOTAL LENGTH
50' UNIT			
EXTERIOR C.S.	4	50'-0"	200'-0"
INTERIOR C.S.	20	50'-0"	1000'-0"
TOTAL	24	50'-0"	1200'-0"

CORED SLABS REQUIRED

	NUMBER	LENGTH	TOTAL LENGTH
30' UNIT			
EXTERIOR C.S.	2	30'-0"	60'-0"
INTERIOR C.S.	10	30'-0"	300'-0"
TOTAL	12	30'-0"	360'-0"

BILL OF MATERIAL FOR ONE 50' CORED SLAB UNIT

				EXTERIOR UNIT		INTERIOR UNIT	
BAR	NUMBER	SIZE	TYPE	LENGTH	WEIGHT	LENGTH	WEIGHT
B6	4	#4	STR	25'-9"	69	25'-9"	69
S1	8	#5	3	4'-3"	35	4'-3"	35
S2	104	#4	3	5'-4"	371	5'-4"	371
* S3	59	#5	1	6'-2"	379		
REINFORCING STEEL			LBS.		475		475
* EPOXY COATED REINFORCING STEEL			LBS.		379		
6500 P.S.I. CONCRETE			CU. YDS.		7.1		7.1
0.6" Ø L.R. STRANDS			No.		19		19

BILL OF MATERIAL FOR ONE 30' CORED SLAB UNIT

				EXTERIOR UNIT		INTERIOR UNIT	
BAR	NUMBER	SIZE	TYPE	LENGTH	WEIGHT	LENGTH	WEIGHT
B2	2	#4	STR	29'-8"	40	29'-8"	40
S1	8	#5	3	4'-3"	35	4'-3"	35
S2	64	#4	3	5'-4"	228	5'-4"	228
* S3	39	#5	1	6'-2"	251		
REINFORCING STEEL			LBS.		303		303
* EPOXY COATED REINFORCING STEEL			LBS.		251		
5000 P.S.I. CONCRETE			CU. YDS.		4.4		4.4
0.6" Ø L.R. STRANDS			No.		9		9

GUTTERLINE ASPHALT THICKNESS & RAIL HEIGHT

33'-10" CLEAR ROADWAY	ASPHALT OVERLAY THICKNESS	RAIL HEIGHT
	@ MID-SPAN	@ MID-SPAN
	SUPERED SECTION	
50' UNITS	1 1/2"	3'-7 3/4"
30' UNITS	3 3/8"	3'-9 5/8"

DEAD LOAD DEFLECTION AND CAMBER

	3'-0" x 1'-9"
50' CORED SLAB UNIT	0.6" Ø L.R. STRAND
CAMBER (SLAB ALONE IN PLACE)	2 1/2" ↑
DEFLECTION DUE TO SUPERIMPOSED DEAD LOAD**	1/4" ↓
FINAL CAMBER	2 1/4" ↑

** INCLUDES FUTURE WEARING SURFACE

DEAD LOAD DEFLECTION AND CAMBER

	3'-0" x 1'-9"
30' CORED SLAB UNIT	0.6" Ø L.R. STRAND
CAMBER (SLAB ALONE IN PLACE)	1/2" ↑
DEFLECTION DUE TO SUPERIMPOSED DEAD LOAD**	1/8" ↓
FINAL CAMBER	3/8" ↑

** INCLUDES FUTURE WEARING SURFACE

CONCRETE RELEASE STRENGTH

UNIT	PSI
50' UNITS	4900
30' UNITS	4000

PROJECT NO. BD-5104K

NASH COUNTY

STATION: 16+90.00 -L-

SHEET 6 OF 6

STATE OF NORTH CAROLINA
DEPARTMENT OF TRANSPORTATION
RALEIGH

STANDARD
3'-0" X 1'-9"
PRESTRESSED CONCRETE
CORED SLAB UNIT
90° SKEW

NORTH CAROLINA PROFESSIONAL SEAL 14045 ENGINEER TIMOTHY A. COGGINS
06/07/13

REVISIONS						SHEET NO.
NO.	BY:	DATE:	NO.	BY:	DATE:	19
1			3			TOTAL SHEETS
2			4			63

ASSEMBLED BY : K. P. SEDAI DATE : 5/24/13
CHECKED BY : M. D. PISO DATE : 5/30/13
DRAWN BY : DGE 5/09 REV. 12/11 MAA/AAC
CHECKED BY : BCH 6/09

07-JUN-2013 12:27
S:\OPGI\Tim\Division 4 LIBR\BD-5104K\ksedai\NCBDS\BD-5104K_Plans.dgn
tcoggins

STD. NO. 21" BOM INFO_36_90S

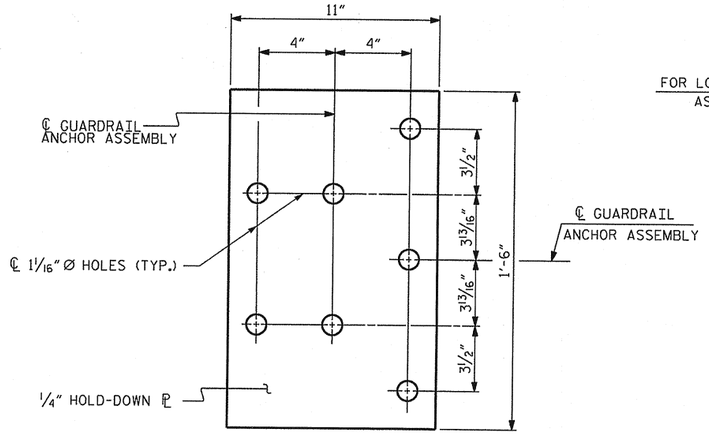

PLAN

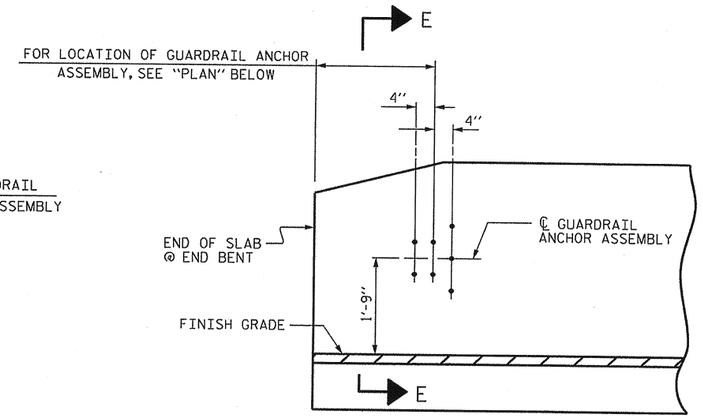

ELEVATION

NOTES

THE GUARDRAIL ANCHOR ASSEMBLY SHALL CONSIST OF A 1/4" HOLD DOWN PLATE AND 7 - 7/8" Ø BOLTS WITH NUTS AND WASHERS.

THE HOLD-DOWN PLATE SHALL CONFORM TO AASHTO M270 GRADE 36. AFTER FABRICATION, THE HOLD-DOWN PLATE SHALL BE HOT-DIP GALVANIZED IN ACCORDANCE WITH AASHTO M111.

BOLTS SHALL CONFORM TO THE REQUIREMENTS OF ASTM A307 AND NUTS SHALL CONFORM TO THE REQUIREMENTS OF AASHTO M291. BOLTS, NUTS AND WASHERS SHALL BE GALVANIZED. (AT THE CONTRACTOR'S OPTION, STAINLESS STEEL BOLTS, NUTS AND WASHERS MAY BE USED AS AN ALTERNATE FOR THE 7/8" Ø GALVANIZED BOLTS, NUTS AND WASHERS. THEY SHALL CONFORM TO OR EXCEED THE MECHANICAL REQUIREMENTS OF ASTM A307. THE USE OF THIS ALTERNATE SHALL BE APPROVED BY THE ENGINEER.)

THE GUARDRAIL ANCHOR ASSEMBLY IS REQUIRED AT ALL POINTS WHERE APPROACH GUARDRAIL IS TO BE ATTACHED TO THE END OF BARRIER RAIL. FOR POINTS OF ATTACHMENT, SEE SKETCH.

AFTER INSTALLATION, THE EXPOSED THREAD OF THE BOLT SHALL BE BURRED WITH A SHARP POINTED TOOL.

THE COST OF THE GUARDRAIL ANCHOR ASSEMBLY SHALL BE INCLUDED IN THE UNIT CONTRACT PRICE BID FOR VERTICAL CONCRETE BARRIER RAIL.

THE VERTICAL REINFORCING BARS MAY BE SHIFTED SLIGHTLY IN THE VERTICAL CONCRETE BARRIER RAIL TO CLEAR ASSEMBLY BOLTS.

THE 1 1/4" Ø HOLES SHALL BE FORMED OR DRILLED WITH A CORE BIT. IMPACT TOOLS WILL NOT BE PERMITTED. ANY CONCRETE DAMAGED BY THIS WORK SHALL BE REPAIRED TO THE SATISFACTION OF THE ENGINEER.

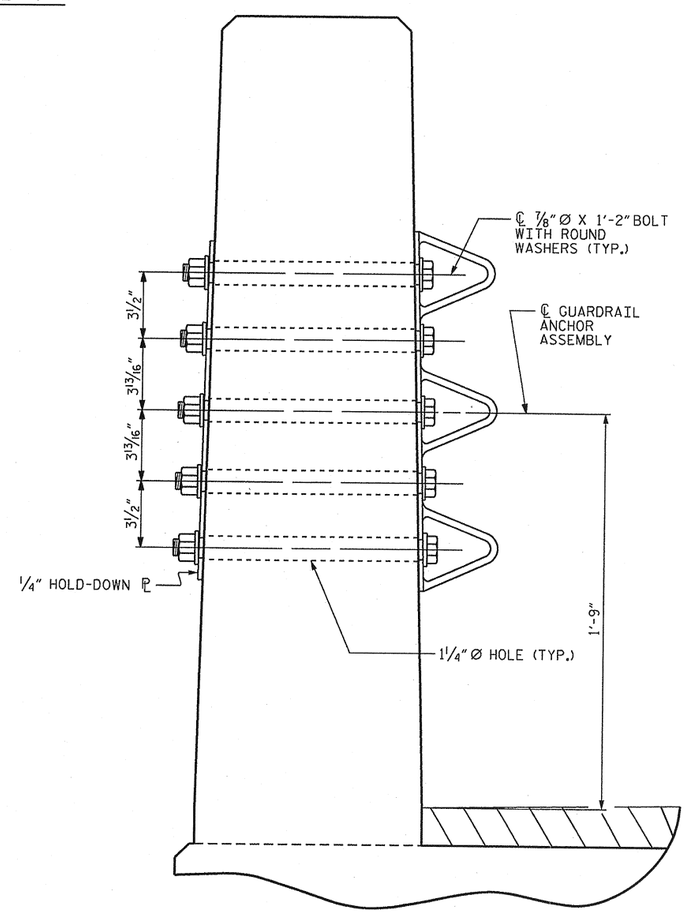

SECTION E-E

GUARDRAIL ANCHOR ASSEMBLY DETAILS

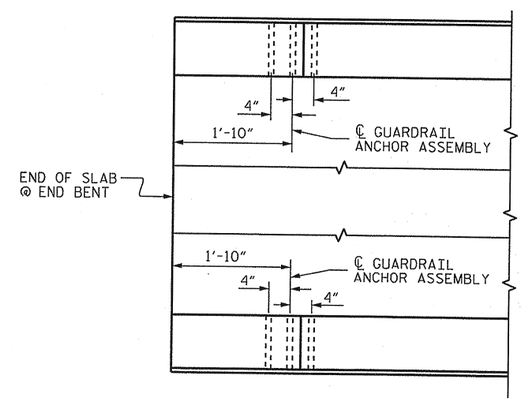

PLAN

LOCATION OF ANCHORS FOR GUARDRAIL

END BENT #1 SHOWN, END BENT #2 SIMILAR.

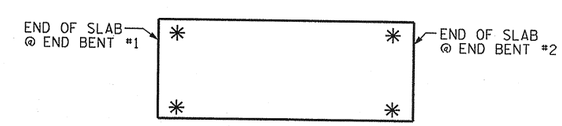

SKETCH SHOWING POINTS OF ATTACHMENT

✳ DENOTES GUARDRAIL ANCHOR ASSEMBLY

PROJECT NO. BD-5104K

NASH COUNTY

STATION: 16+90.00 -L-

STATE OF NORTH CAROLINA
DEPARTMENT OF TRANSPORTATION
RALEIGH

STANDARD
GUARDRAIL ANCHORAGE FOR VERTICAL CONCRETE BARRIER RAIL

NORTH CAROLINA PROFESSIONAL SEAL 14045 ENGINEER TIMOTHY A. COGGINS
06/07/13

ASSEMBLED BY : K. P. SEDAI	DATE : 5/24/13		
CHECKED BY : M. D. PISO	DATE : 5/30/13		
DRAWN BY : MAA 5/10	ADDED 5/6/10		
CHECKED BY : GM 5/10	REV. 10/1/11	MAA/GM	
	REV. 12/5/11	MAA/GM	

REVISIONS						SHEET NO.
NO.	BY:	DATE:	NO.	BY:	DATE:	20
1			3			TOTAL SHEETS
2			4			63

07-JUN-2013 12:26
S:\DPGI\Tim\Division 4 LIBR\BD-5104K\ksedai\NCBDS\BD-5104K_Plans.dgn
tcoggins

(SHT 1) STD NO. GRA3

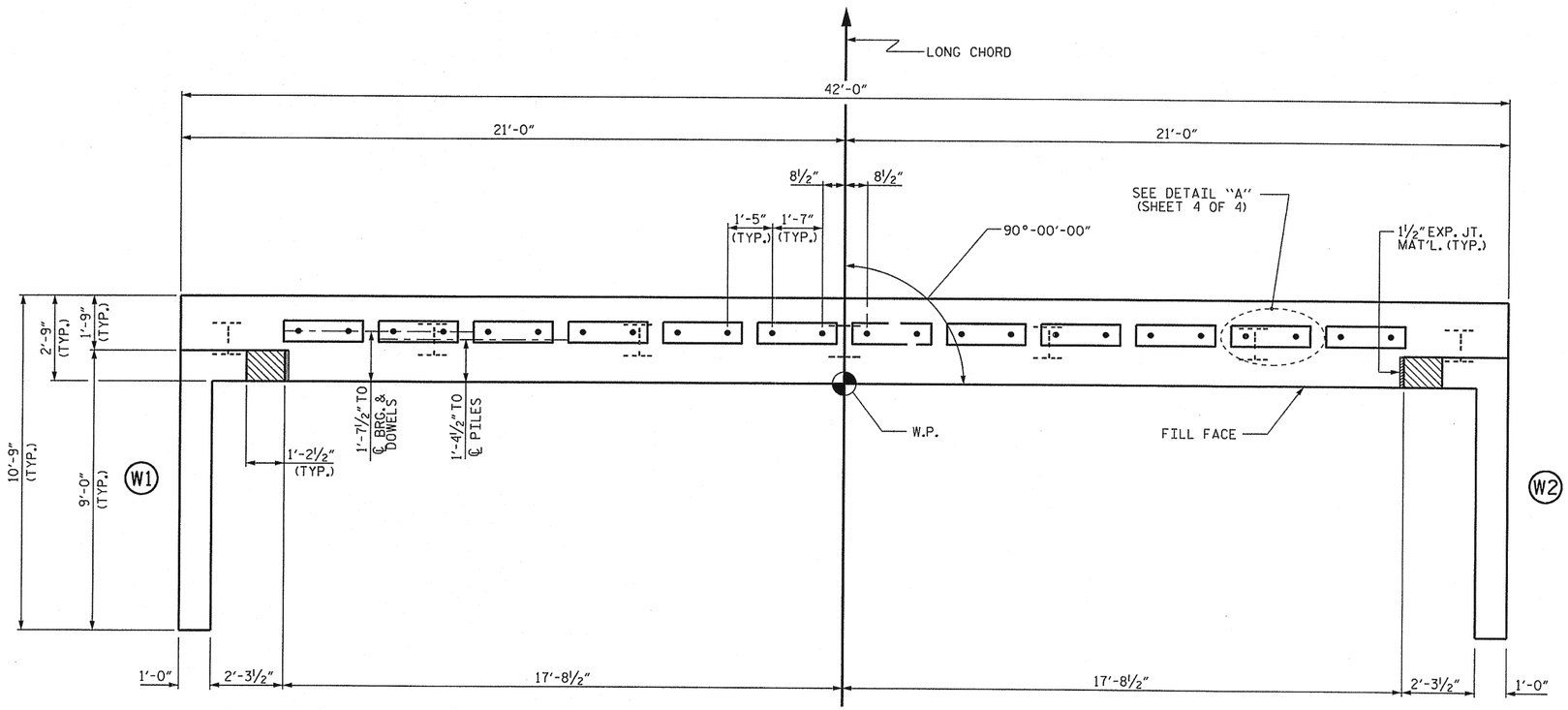

PLAN

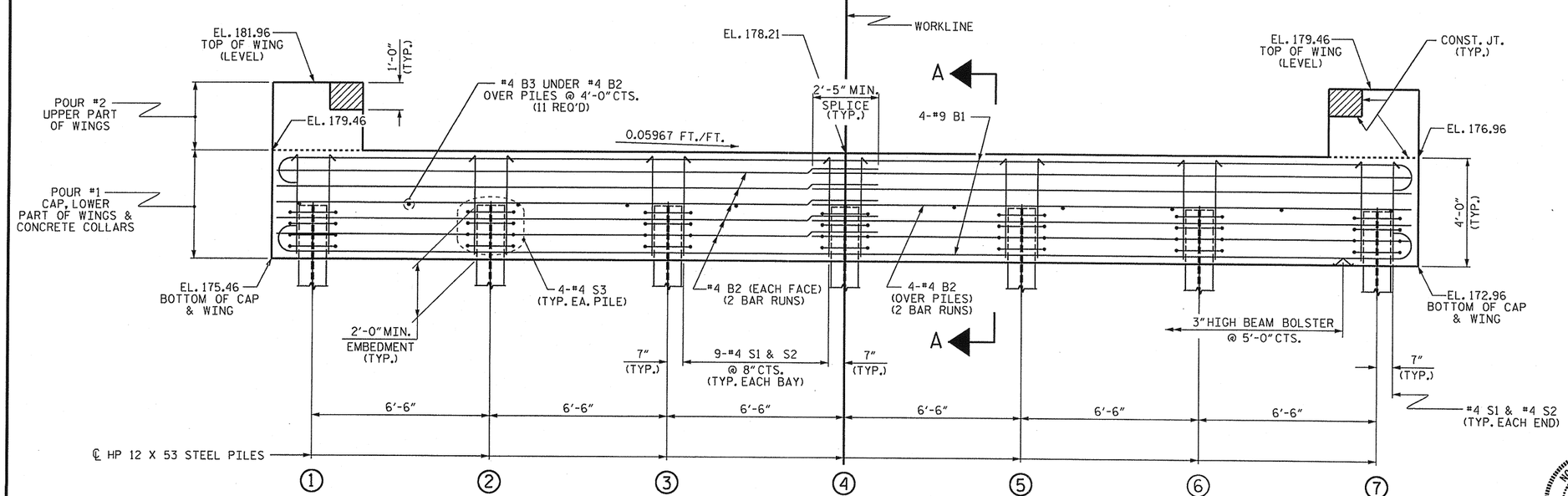

ELEVATION

WINGS NOT SHOWN FOR CLARITY.
FOR SECTION A-A, SEE SHEET 4 OF 4.
CONCRETE COLLARS FOR STEEL PILES NOT SHOWN IN PLAN AND ELEVATION VIEWS FOR CLARITY.
SEE "CORROSION PROTECTION FOR STEEL PILES DETAIL", SHEET 4 OF 4.

NOTES

STIRRUPS IN CAP MAY BE SHIFTED AS NECESSARY TO CLEAR DOWELS.

THE CONCRETE IN THE SHADED AREA OF THE WING SHALL BE POURED AFTER THE VERTICAL CONCRETE BARRIER RAIL IS CAST IF SLIP FORMING IS USED.

FOR PILE SPLICE DETAILS, SEE SHEET 4 OF 4.

FOR WING DETAILS, SEE SHEET 3 OF 4.

TOP OF PILE ELEVATIONS	
1	177.41
2	177.02
3	176.63
4	176.24
5	175.85
6	175.47
7	175.08

PROJECT NO. BD-5104K
NASH COUNTY
STATION: 16+90.00 -L-

SHEET 1 OF 4

STATE OF NORTH CAROLINA
DEPARTMENT OF TRANSPORTATION
RALEIGH

SUBSTRUCTURE

END BENT No. 1

NORTH CAROLINA PROFESSIONAL SEAL 14045 ENGINEER TIMOTHY J. COGGINS
06/07/13

ASSEMBLED BY :	K. P. SEDAI	DATE : 5/28/13
CHECKED BY :	M. D. PISO	DATE : 5/30/13
DRAWN BY : WJH 12/11		
CHECKED BY : AAC 12/11		

REVISIONS						SHEET NO.
NO.	BY:	DATE:	NO.	BY:	DATE:	21
1			3			TOTAL SHEETS
2			4			63

07-JUN-2013 12:26
S:\DPGI\Tim\Division 4 LIBR\BD-5104K\ksedai\NCBDS\BD-5104K_Plans.dgn
tcoggins

STD. NO. EB 36 9064

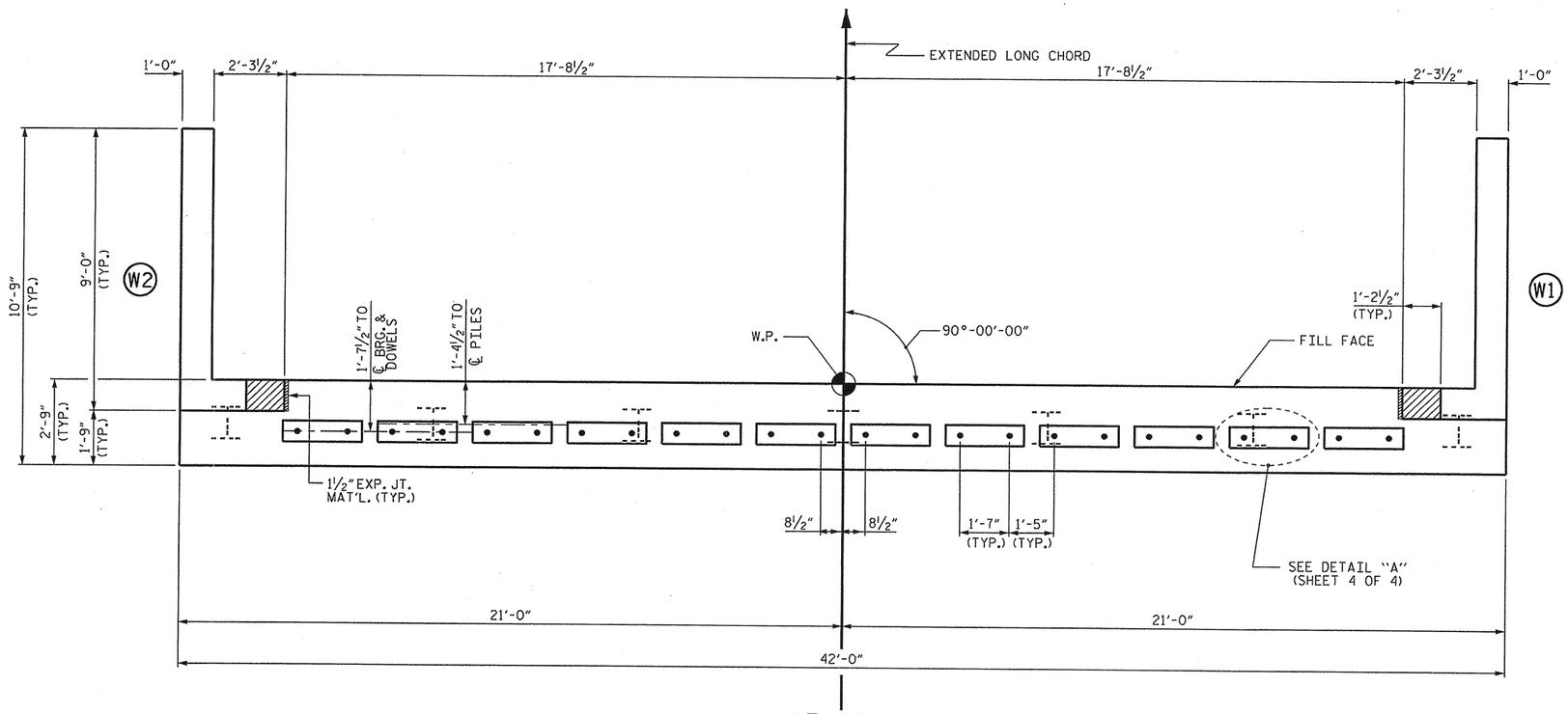

PLAN

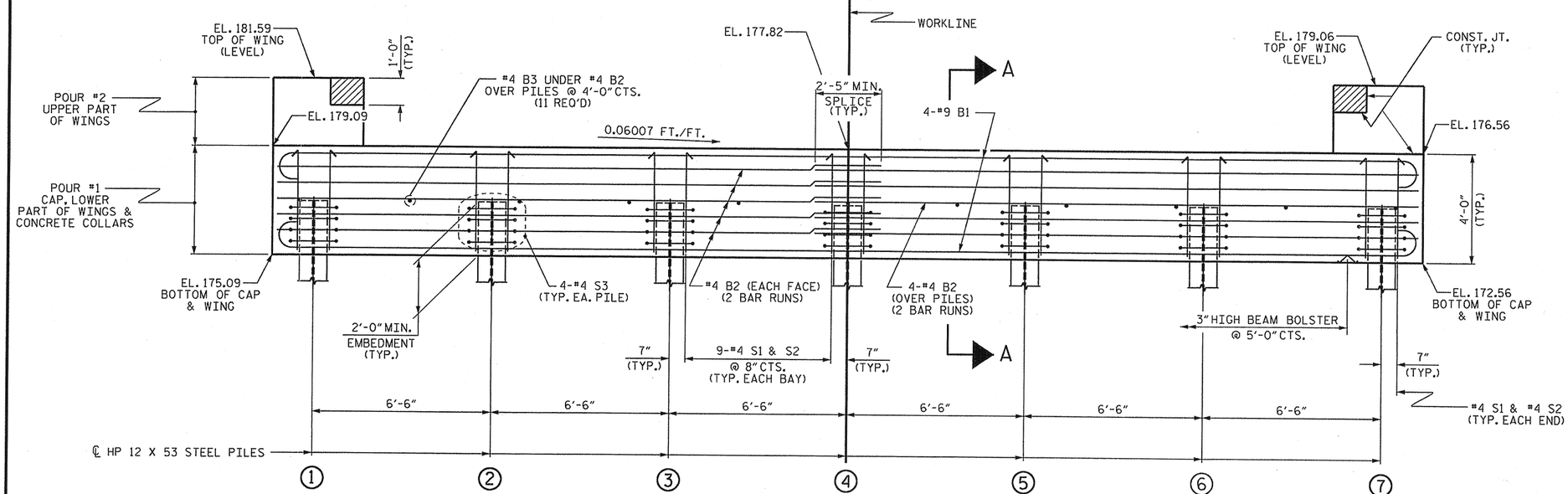

ELEVATION

WINGS NOT SHOWN FOR CLARITY.
FOR SECTION A-A, SEE SHEET 4 OF 4.
CONCRETE COLLARS FOR STEEL PILES NOT SHOWN IN PLAN AND ELEVATION VIEWS FOR CLARITY.
SEE "CORROSION PROTECTION FOR STEEL PILES DETAIL", SHEET 4 OF 4.

NOTES

STIRRUPS IN CAP MAY BE SHIFTED AS NECESSARY TO CLEAR DOWELS.

THE CONCRETE IN THE SHADED AREA OF THE WING SHALL BE POURED AFTER THE VERTICAL CONCRETE BARRIER RAIL IS CAST IF SLIP FORMING IS USED.

FOR PILE SPLICE DETAILS, SEE SHEET 4 OF 4.

FOR WING DETAILS, SEE SHEET 3 OF 4.

TOP OF PILE ELEVATIONS	
1	177.03
2	176.63
3	176.24
4	175.85
5	175.46
6	175.07
7	174.68

PROJECT NO. BD-5104K
NASH COUNTY
STATION: 16+90.00 -L-

SHEET 2 OF 4

STATE OF NORTH CAROLINA
DEPARTMENT OF TRANSPORTATION
RALEIGH

SUBSTRUCTURE

END BENT No. 2

NORTH CAROLINA PROFESSIONAL SEAL 14045 ENGINEER TIMOTHY L. COGGINS
06/26/13

ASSEMBLED BY :	K. P. SEDAI	DATE : 5/28/13
CHECKED BY :	M. D. PISO	DATE : 5/30/13
DRAWN BY : WJH	12/11	
CHECKED BY : AAC	12/11	

REVISIONS							SHEET NO.
NO.	BY:	DATE:	NO.	BY:	DATE:		22
1			3				TOTAL SHEETS
2			4				63

26-JUN-2013 14:18
S:\DPG\TIM\Division 4 LIBR\BD-5104K\ksedai\NCBDS\BD-5104K_Plans.dgn
tcoggins

STD. NO. EB_36_90S4

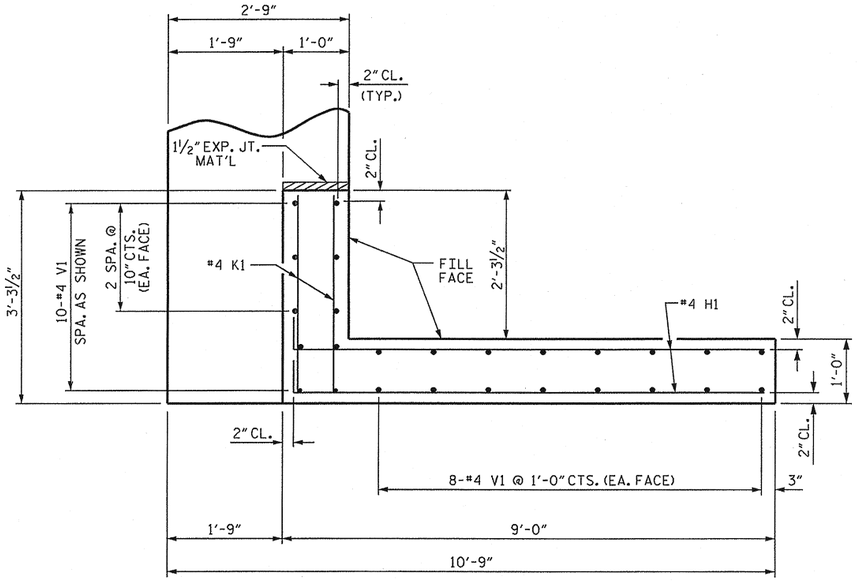

PLAN OF WING (W1)

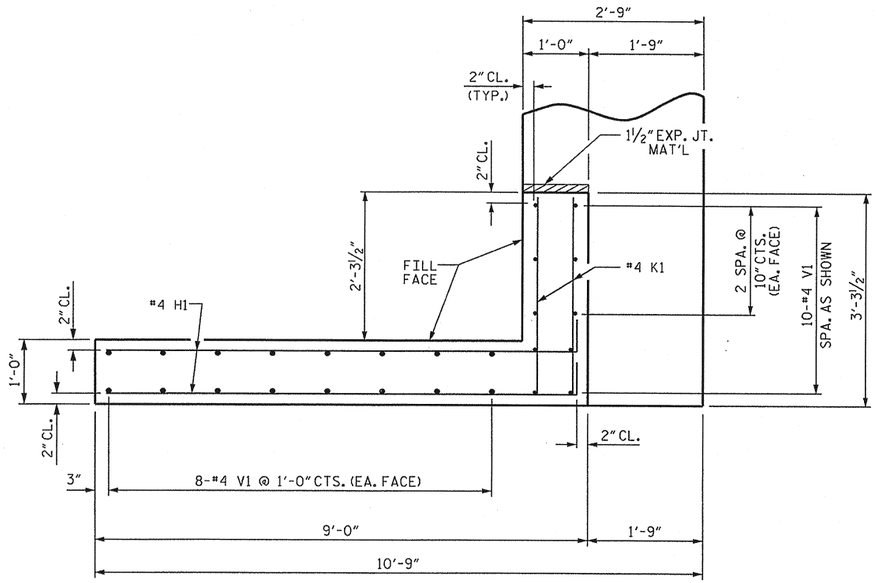

PLAN OF WING (W2)

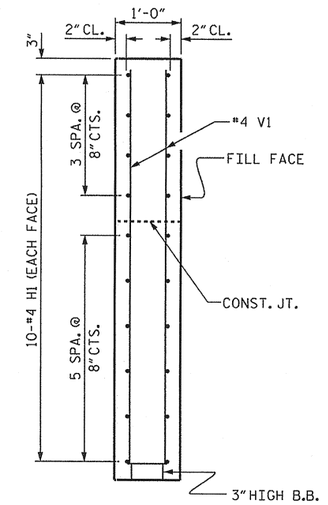

SECTION X-X

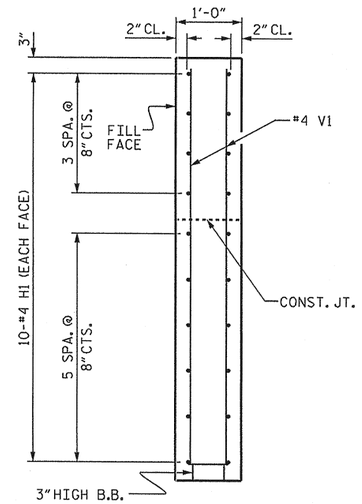

SECTION Y-Y

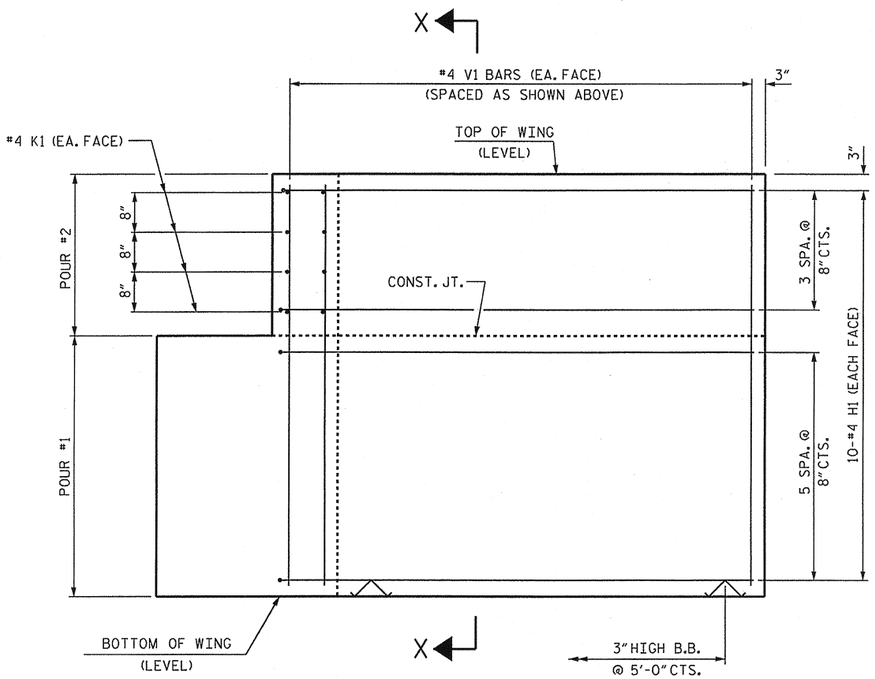

ELEVATION OF WING (W1)

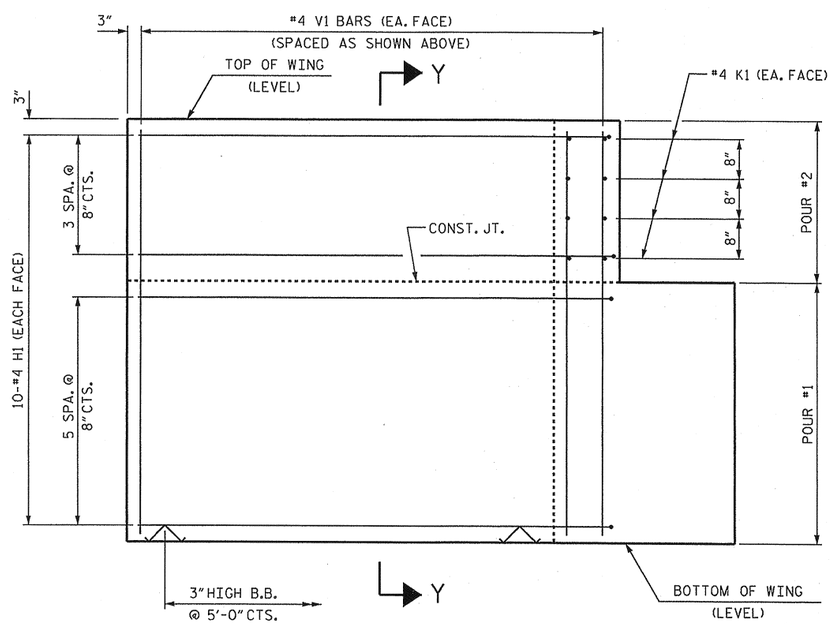

ELEVATION OF WING (W2)

WING DETAILS

PROJECT NO. BD-5104K

NASH COUNTY

STATION: 16+90.00 -L-

SHEET 3 OF 4

STATE OF NORTH CAROLINA
DEPARTMENT OF TRANSPORTATION
RALEIGH

SUBSTRUCTURE

END BENT
WING DETAILS

NORTH CAROLINA PROFESSIONAL SEAL 14045 ENGINEER TIMOTHY L. COGGINS
06/07/13

REVISIONS								SHEET NO.
NO.	BY:	DATE:	NO.	BY:	DATE:			23
1			3					TOTAL SHEETS
2			4					63

ASSEMBLED BY : K. P. SEDAI	DATE : 5/28/13
CHECKED BY : M. D. PISO	DATE : 5/30/13
DRAWN BY : WJH 12/11	
CHECKED BY : AAC 12/11	

07-JUN-2013 12:25
S:\DPG1\Tim\Division 4 LIBR\BD-5104K\ksedai\NCBDS\BD-5104K_Plans.dgn
tcoggins

STD. NO. EB_36_90S4

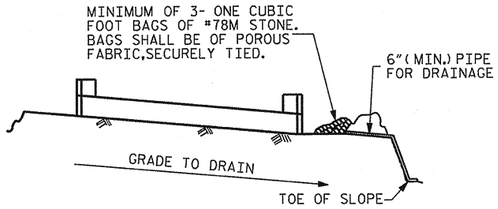

BAGGED STONE AND PIPE SHALL BE PLACED IMMEDIATELY AFTER COMPLETION OF END BENT EXCAVATION. PIPE MAY BE EITHER CONCRETE, CORRUGATED STEEL, CORRUGATED ALUMINUM ALLOY, OR CORRUGATED PLASTIC. PERFORATED PIPE WILL NOT BE ALLOWED.

BAGGED STONE SHALL REMAIN IN PLACE UNTIL THE ENGINEER DIRECTS THAT IT BE REMOVED. THE CONTRACTOR SHALL REMOVE AND DISPOSE OF SILT ACCUMULATIONS AT BAGGED STONE WHEN SO DIRECTED BY THE ENGINEER. BAGS SHALL BE REMOVED AND REPLACED WHENEVER THE ENGINEER DETERMINES THAT THEY HAVE DETERIORATED AND LOST THEIR EFFECTIVENESS.

NO SEPARATE PAYMENT WILL BE MADE FOR THIS WORK AND THE ENTIRE COST OF THIS WORK SHALL BE INCLUDED IN THE UNIT CONTRACT PRICE BID FOR THE SEVERAL PAY ITEMS.

TEMPORARY DRAINAGE AT END BENT

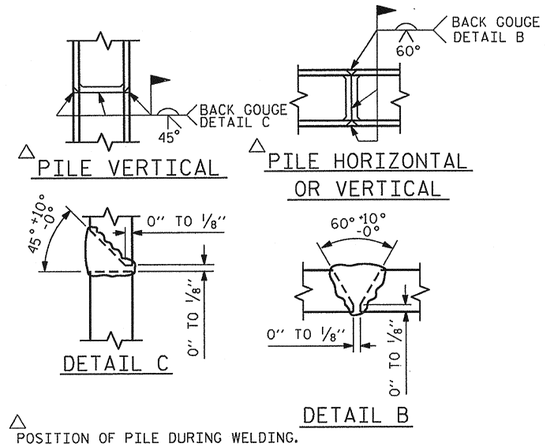

△ POSITION OF PILE DURING WELDING.

PILE SPLICE DETAILS

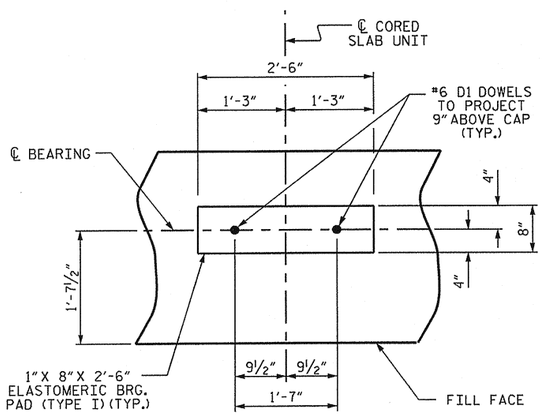

DETAIL "A"

(END BENT No. 1 SHOWN, END BENT No. 2 SIMILAR BY ROTATION)

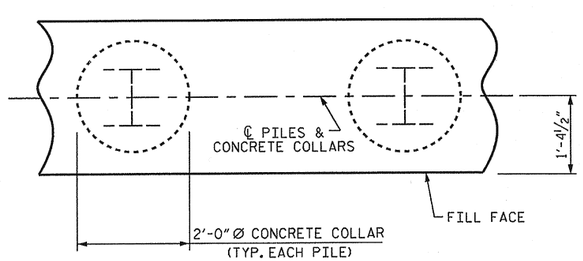

PLAN

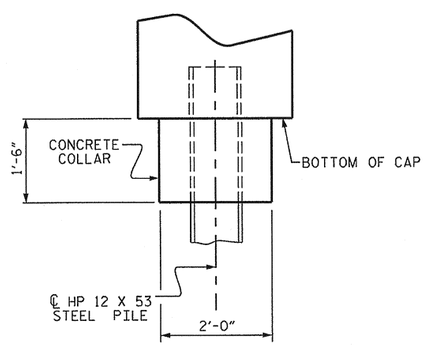

ELEVATION

CORROSION PROTECTION FOR STEEL PILES DETAIL

(END BENT No. 1 SHOWN, END BENT No. 2 SIMILAR BY ROTATION)

BAR TYPES

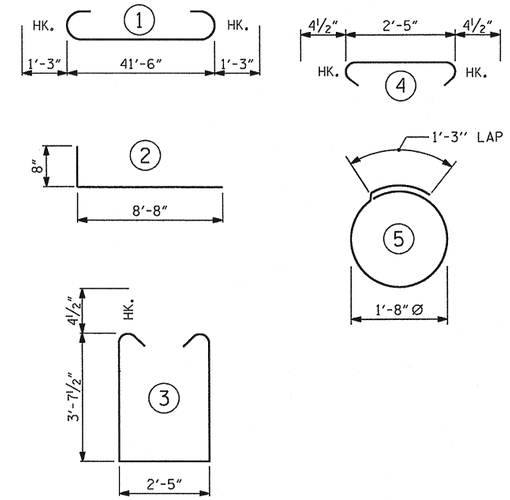

ALL BAR DIMENSIONS ARE OUT TO OUT.

END BENT No. 1	END BENT No. 2
HP 12 X 53 STEEL PILES	HP 12 X 53 STEEL PILES
NO: 7 LIN. FT.= 165	NO: 7 LIN. FT.= 245
STEEL PILE POINTS	
EACH NO: 7	

BILL OF MATERIAL FOR ONE END BENT

BAR	NO.	SIZE	TYPE	LENGTH	WEIGHT
B1	8	#9	1	44'-0"	1197
B2	28	#4	STR	22'-1"	413
B3	11	#4	STR	2'-5"	18
D1	24	#6	STR	1'-6"	54
H1	40	#4	2	9'-4"	249
K1	16	#4	STR	2'-11"	31
S1	56	#4	3	10'-5"	390
S2	56	#4	4	3'-2"	118
S3	28	#4	5	6'-6"	122
V1	52	#4	STR	6'-2"	214

REINFORCING STEEL (FOR ONE END BENT) 2806 LBS.

CLASS A CONCRETE BREAKDOWN (FOR ONE END BENT)

POUR #1 CAP, LOWER PART OF WINGS & COLLARS 20.7 C.Y.

POUR #2 UPPER PART OF WINGS 2.1 C.Y.

TOTAL CLASS A CONCRETE 22.8 C.Y.

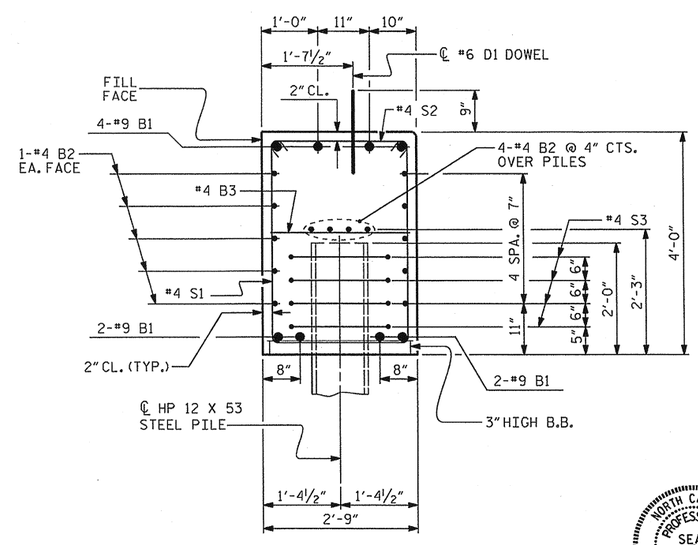

SECTION A-A

(CONCRETE COLLAR NOT SHOWN FOR CLARITY. SEE "CORROSION PROTECTION FOR STEEL PILES DETAIL.")

NORTH CAROLINA PROFESSIONAL SEAL 14045 ENGINEER TIMOTHY W. COGGINS
06/07/13

PROJECT NO. BD-5104K
NASH COUNTY
STATION: 16+90.00 -L-

SHEET 4 OF 4

STATE OF NORTH CAROLINA
DEPARTMENT OF TRANSPORTATION
RALEIGH

SUBSTRUCTURE

END BENT No. 1 & 2 DETAILS

REVISIONS							SHEET NO.
NO.	BY:	DATE:	NO.	BY:	DATE:		24
1			3				TOTAL SHEETS
2			4				63

ASSEMBLED BY : K. P. SEDAI	DATE : 5/28/13	
CHECKED BY : M. D. PISO	DATE : 5/30/13	
DRAWN BY : WJH 12/11		
CHECKED BY : AAC 12/11		

07-JUN-2013 12:24
S:\DPG1\Tim\Division 4 LIBR\BD-5104K\ksedai\NCBDS\BD-5104K_Plans.dgn
tcoggins

STD. NO. EB_36_90S4

NOTES

STIRRUPS IN CAP MAY BE SHIFTED AS NECESSARY TO CLEAR DOWELS.

THE LATERAL GUIDES ARE NOT TO BE POURED UNTIL AFTER THE CORED SLAB UNITS ARE IN PLACE.

★ INVERT ALTERNATE STIRRUPS.

GALVANIZE A MINIMUM OF 29 FEET FROM THE TOP OF LEFTMOST 4 PILES AND FULL LENGTH OF THE RIGHTMOST 4 PILES OF INTERIOR BENT 1 IN ACCORDANCE WITH SECTION 1076 OF THE STANDARD SPECIFICATIONS.

GALVANIZE THE FULL LENGTH OF INTERIOR BENT 2 PILES IN ACCORDANCE WITH SECTION 1076 OF THE STANDARD SPECIFICATIONS.

THE CONTRACTOR HAS THE OPTION TO OMIT THE LATERAL GUIDE IF APPROVED BY THE ENGINEER.

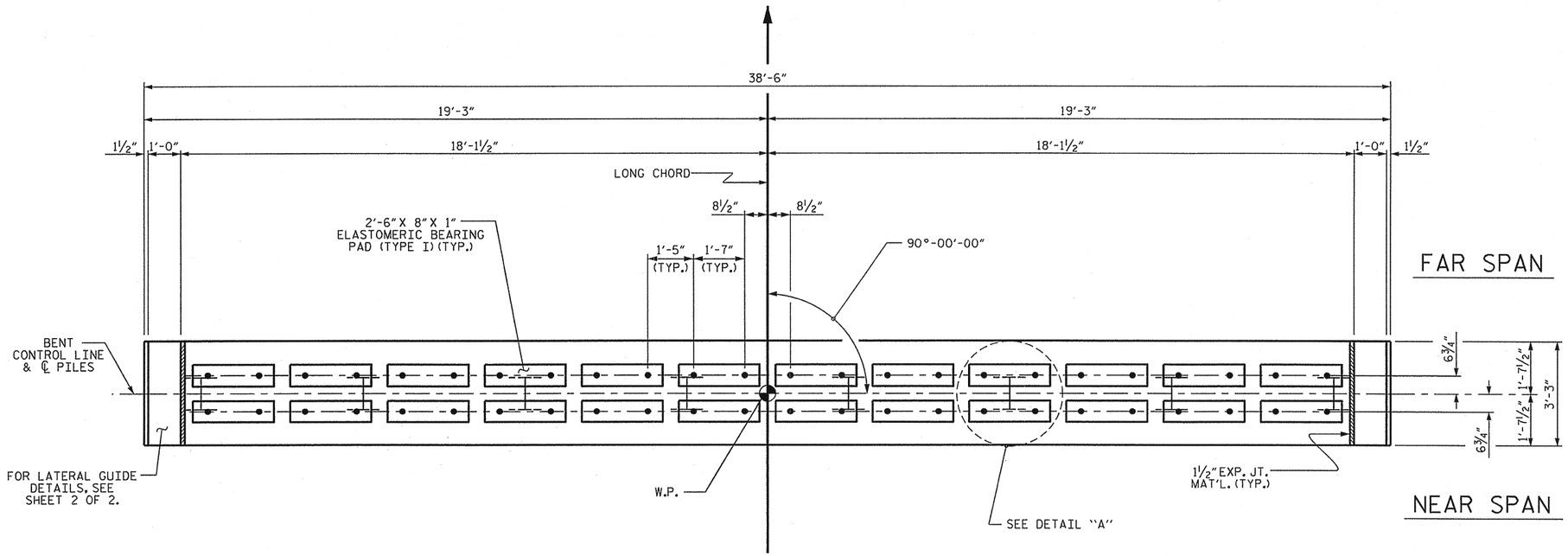

PLAN

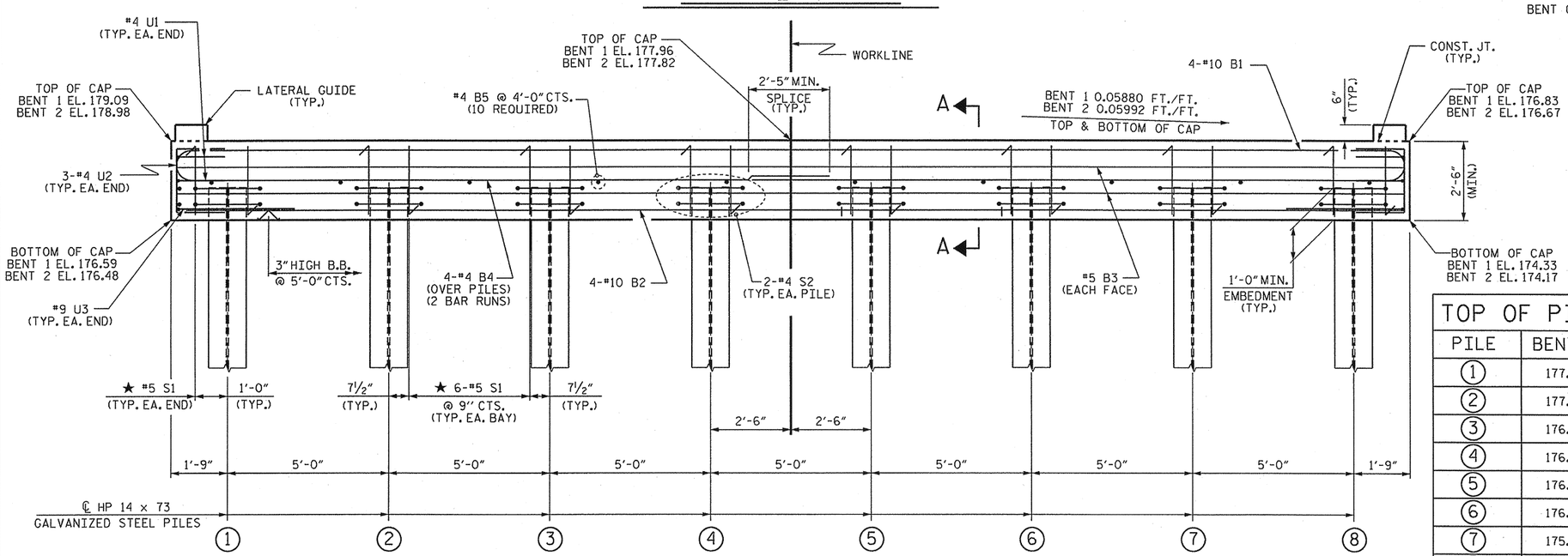

ELEVATION

FOR SECTION A-A, SEE SHEET 2 OF 2

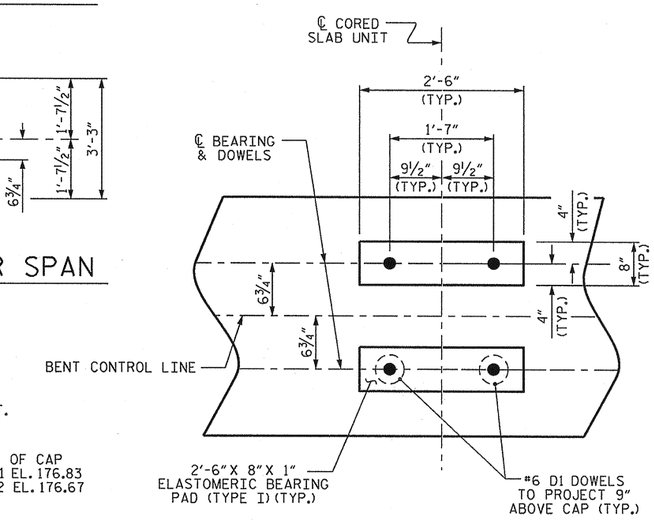

DETAIL "A"

(DIMENSIONS ARE TYPICAL EACH BEARING)

TOP OF PILE ELEV.		
PILE	BENT 1	BENT 2
1	177.52	177.41
2	177.23	177.11
3	176.94	176.81
4	176.64	176.51
5	176.35	176.21
6	176.05	175.91
7	175.76	175.61
8	175.47	175.31

PROJECT NO. BD-5104K

NASH COUNTY

STATION: 16+90.00 -L-

SHEET 1 OF 2

STATE OF NORTH CAROLINA
DEPARTMENT OF TRANSPORTATION
RALEIGH

SUBSTRUCTURE

BENTS 1 & 2

NORTH CAROLINA PROFESSIONAL SEAL 14045 ENGINEER TIMOTHY K. GOGGINS
06/07/13

REVISIONS								SHEET NO.
NO.	BY:	DATE:	NO.	BY:	DATE:			25
1			3					TOTAL SHEETS
2			4					63

ASSEMBLED BY : K. P. SEDAI DATE : 5/29/13
CHECKED BY : M. D. PISO DATE : 5/30/13

DRAWN BY : DGE 05/10
CHECKED BY : MKT 05/10

07-JUN-2013 12:23
S:\DPGI\Tim\Division 4 LIBR\BD-5104K\ksedai\NCBDS\BD-5104K_Plans.dgn
tcoggins

STD. NO. 14" HP_BT_36_90S_<60'

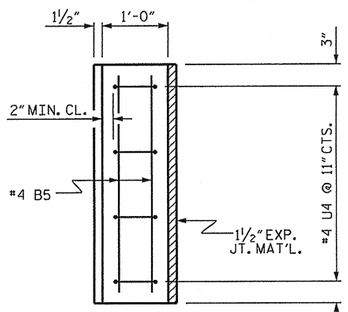

PLAN

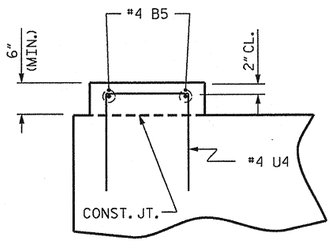

ELEVATION

LATERAL GUIDE DETAILS

(LEFT LATERAL GUIDE SHOWN, RIGHT SIDE SIMILAR)

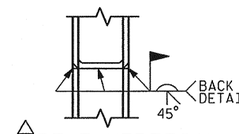

△PILE VERTICAL

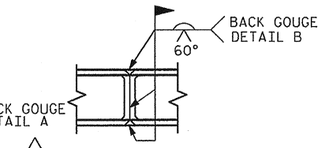

△PILE HORIZONTAL OR VERTICAL

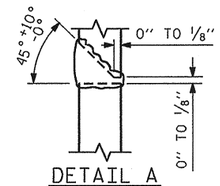

DETAIL A

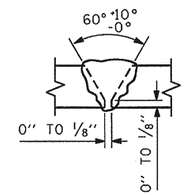

DETAIL B

△POSITION OF PILE DURING WELDING.

PILE SPLICE DETAILS

BAR TYPES

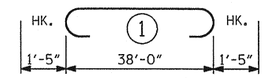

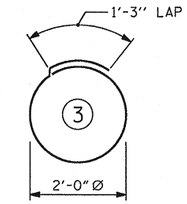

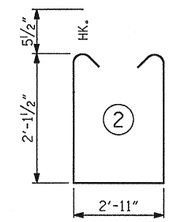

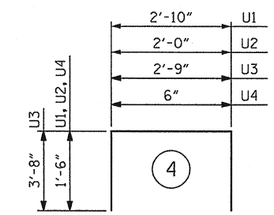

ALL BAR DIMENSIONS ARE OUT TO OUT.

BILL OF MATERIAL

FOR ONE BENT

BAR	NO.	SIZE	TYPE	LENGTH	WEIGHT
B1	4	#10	1	40'-10"	703
B2	4	#10	STR	38'-2"	657
B3	4	#5	STR	38'-2"	159
B4	8	#4	STR	20'-4"	109
B5	14	#4	STR	2'-11"	27
D1	48	#6	STR	1'-6"	108
S1	44	#5	2	8'-1"	371
S2	16	#4	3	7'-7"	81
U1	4	#4	4	5'-10"	16
U2	6	#4	4	5'-0"	20
U3	2	#9	4	10'-1"	69
U4	8	#4	4	3'-6"	19

REINFORCING STEEL (FOR ONE BENT) 2339 LBS

CLASS A CONCRETE BREAKDOWN (FOR ONE BENT)

POUR #1 (CAP)	11.6 C.Y.
POUR #2 (LATERAL GUIDES)	0.1 C.Y.
TOTAL CLASS A CONCRETE	11.7 C.Y.

HP 14 X 73 GALVANIZED STEEL PILES (BENT 1)

No. 8	LIN. FT.	340
STEEL PILE POINTS	No.	8
PREDRILLING FOR PILES	LIN. FT.	200

HP 14 X 73 GALVANIZED STEEL PILES (BENT 2)

No. 8	LIN. FT.	280
STEEL PILE POINTS	No.	8
PREDRILLING FOR PILES	LIN. FT.	160

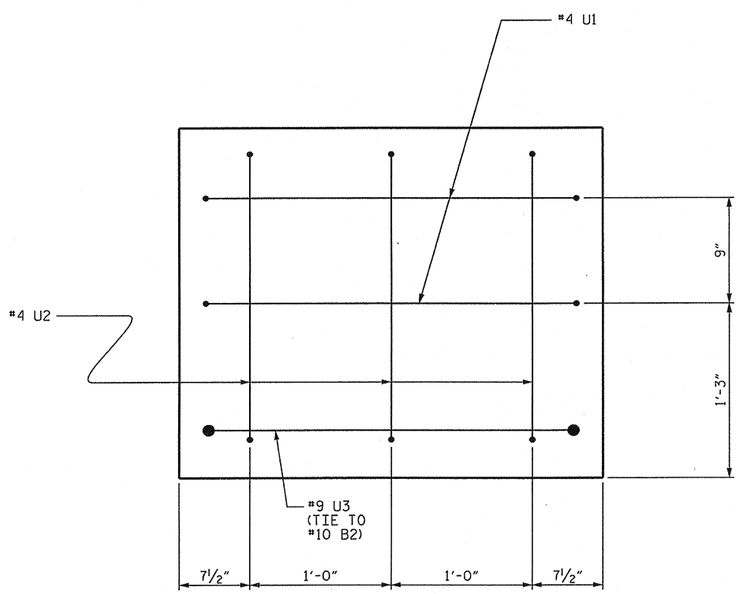

END OF CAP VIEW

(TYPICAL BOTH ENDS)

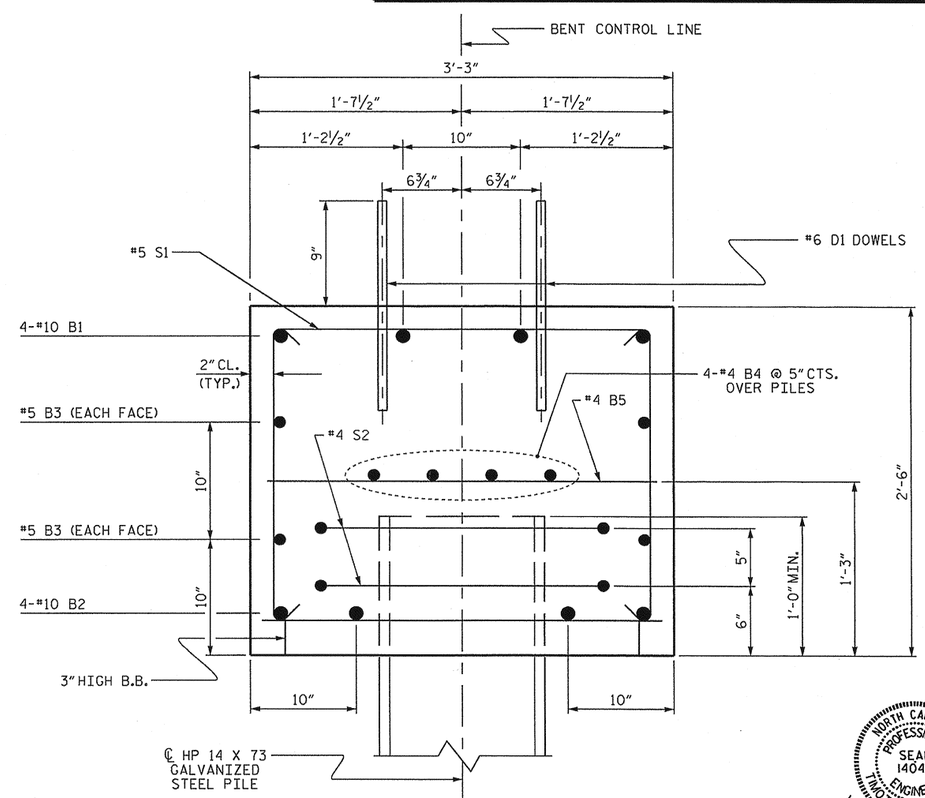

SECTION A-A

NORTH CAROLINA PROFESSIONAL SEAL 14045 ENGINEER TIMOTHY W. COGGINS

06/07/13

PROJECT NO. BD-5104K

NASH COUNTY

STATION: 16+90.00 -L-

SHEET 2 OF 2

STATE OF NORTH CAROLINA
DEPARTMENT OF TRANSPORTATION
RALEIGH

SUBSTRUCTURE

BENTS 1 & 2

REVISIONS						SHEET NO.
NO.	BY:	DATE:	NO.	BY:	DATE:	26
1			3			TOTAL SHEETS
2			4			63

DRAWN BY :	K. P. SEDAI	DATE :	5/29/13
CHECKED BY :	M. D. PISO	DATE :	5/30/13
DRAWN BY :	DGE 05/10		
CHECKED BY :	MKT 05/10		

07-JUN-2013 12:23
S:\DPG1\Tim\Division 4 LIBR\BD-5104K\ksedai\NCBDS\BD-5104K_Plans.dgn
tcoggins

STD. NO. 14" HP_BT_36_90S_<60'

NOTES :

FOR BERM WIDTH DIMENSIONS, SEE GENERAL DRAWING.

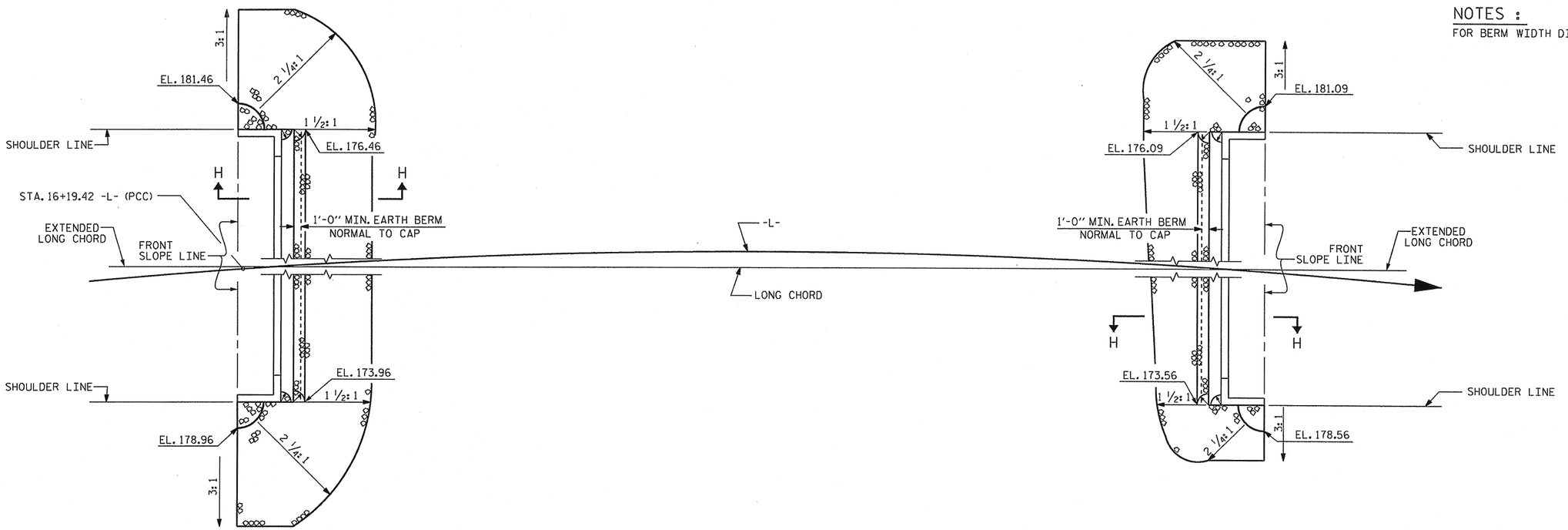

END BENT 1

END BENT 2

PLAN

ESTIMATED QUANTITIES		
BRIDGE @ STA. 16+90.00 -L-	RIP RAP CLASS II (2'-0" THICK)	GEOTEXTILE FOR DRAINAGE
	TONS	SQUARE YARDS
END BENT 1	190	215
END BENT 2	105	115

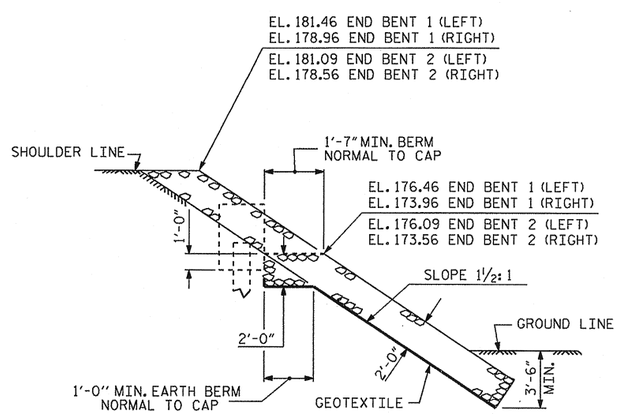

SECTION H-H

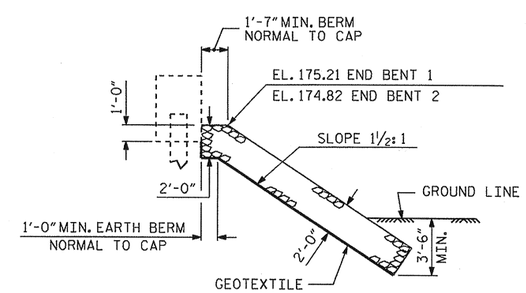

℄ SECTION

BERM RIP RAPPED

PROJECT NO. BD-5104K

NASH COUNTY

STATION: 16+90.00 -L-

STATE OF NORTH CAROLINA
DEPARTMENT OF TRANSPORTATION
RALEIGH

STANDARD

RIP RAP DETAILS

NORTH CAROLINA PROFESSIONAL SEAL 14045 ENGINEER TIMOTHY E. COGGINS

06/07/13

REVISIONS							
NO.	BY:	DATE:	NO.	BY:	DATE:	SHEET NO. 27	
1			3			TOTAL SHEETS 63	
2			4				

ASSEMBLED BY : K. P. SEDAI		DATE : 5/29/13	
CHECKED BY : M. D. PISO		DATE : 6/3/13	
DRAWN BY : REK 1/84	REV. 5/1/06R	TLA/GM	
CHECKED BY : RDU 1/84	REV. 10/1/11	MAA/GM	
	REV. 12/21/11	MAA/GM	

07-JUN-2013 12:23
S:\DPGI\Tim\Division 4 LIBR\BD-5104K\ksedai\NCBDS\BD-5104K_Plans.dgn
tcoggins

STD. NO. RR1 (Sht 2)

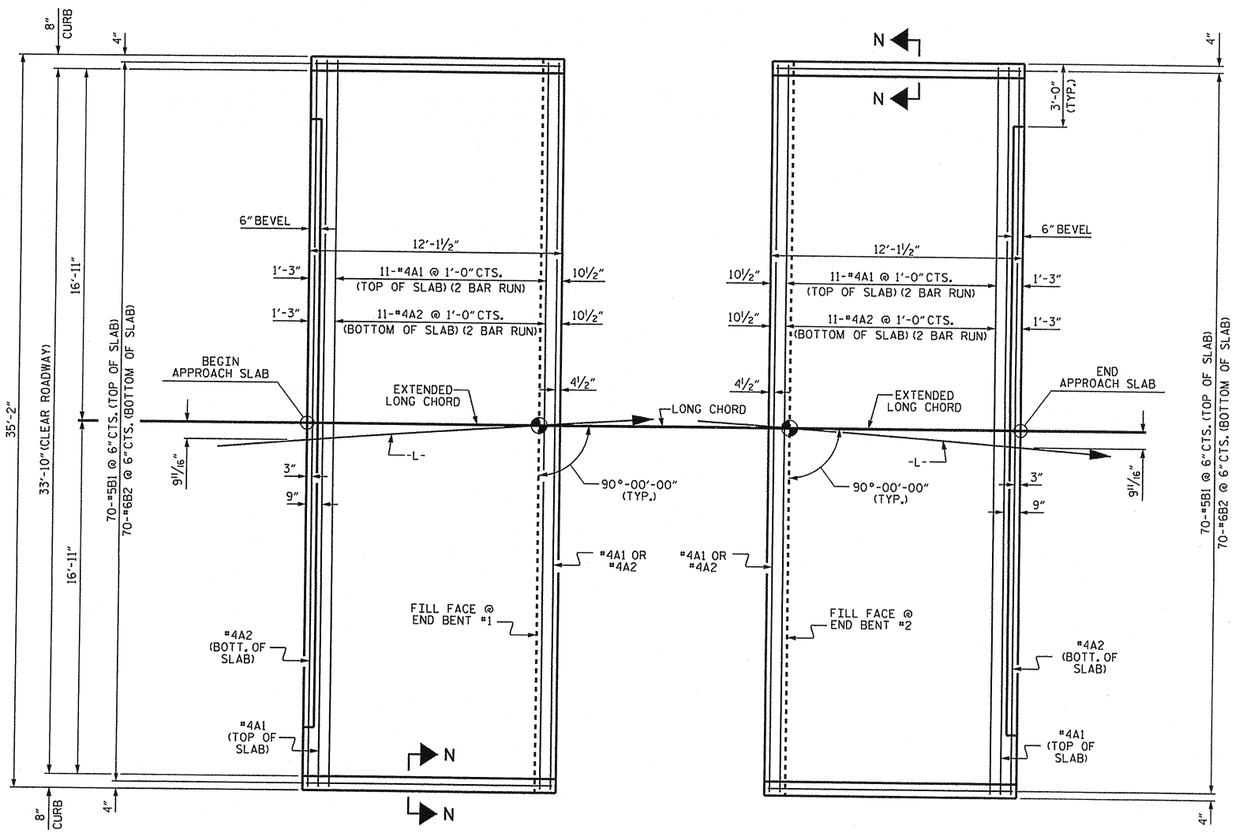

PLAN @ END BENT #1

PLAN @ END BENT #2

DIMENSIONS SHOWN ARE TYPICAL FOR BOTH APPROACH SLABS

NOTES

FOR BRIDGE APPROACH FILL INCLUDING GEOTEXTILE, 4"Ø DRAINAGE PIPE, AND #78M STONE BACKFILL. SEE ROADWAY PLANS.

GEOTEXTILE SHALL BE TYPE 1IN ACCORDANCE WITH THE STANDARD SPECIFICATIONS SECTION 1056.

#78M STONE BACKFILL (CLASS V SELECT MATERIAL) SHALL BE IN ACCORDANCE WITH STANDARD SPECIFICATIONS SECTION 1016.

#78M STONE BACKFILL IS TO BE CONTINUOUS ALONG FILL FACE OF BACKWALL FROM OUTSIDE EDGE TO OUTSIDE EDGE OF APPROACH SLAB.

FOR THE 4"Ø DRAINAGE PIPE OUTLET(S), SEE ROADWAY STANDARD DRAWINGS.

AREA BETWEEN THE WINGWALL AND APPROACH SLAB SHALL BE GRADED TO DRAIN THE WATER AWAY FROM THE FILL FACE OF THE BRIDGE AND SHALL BE PAVED. SEE ROADWAY PLANS.

APPROACH SLAB GROOVING IS NOT REQUIRED.

BILL OF MATERIAL

APPROACH SLAB AT EB #1

BAR	NO.	SIZE	TYPE	LENGTH	WEIGHT
* A1	26	#4	STR	18'-6"	321
A2	26	#4	STR	18'-4"	318
* B1	70	#5	STR	11'-2"	815
B2	70	#6	STR	11'-8"	1227
REINFORCING STEEL				LBS.	1545
* EPOXY COATED REINFORCING STEEL				LBS.	1136
CLASS AA CONCRETE				C. Y.	20.3

APPROACH SLAB AT EB #2

BAR	NO.	SIZE	TYPE	LENGTH	WEIGHT
* A1	26	#4	STR	18'-6"	321
A2	26	#4	STR	18'-4"	318
* B1	70	#5	STR	11'-2"	815
B2	70	#6	STR	11'-8"	1227
REINFORCING STEEL				LBS.	1545
* EPOXY COATED REINFORCING STEEL				LBS.	1136
CLASS AA CONCRETE				C. Y.	20.3

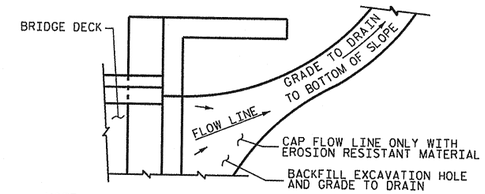

NOTE: IF THE APPROACH SLAB IS NOT CONSTRUCTED IMMEDIATELY AFTER THE BACKFILLING OF THE END BENT EXCAVATION, GRADE TO DRAIN TO THE BOTTOM OF THE SLOPE AND PROVIDE EROSION RESISTANT MATERIAL, SUCH AS FIBERGLASS ROVING OR AS DIRECTED BY THE ENGINEER TO PREVENT SOIL EROSION AND TO PROTECT THE AREA ADJACENT TO THE STRUCTURE. THE CONTRACTOR WILL BE REQUIRED TO REMOVE THESE MATERIALS PRIOR TO CONSTRUCTION OF THE APPROACH SLAB.

TEMPORARY DRAINAGE DETAIL

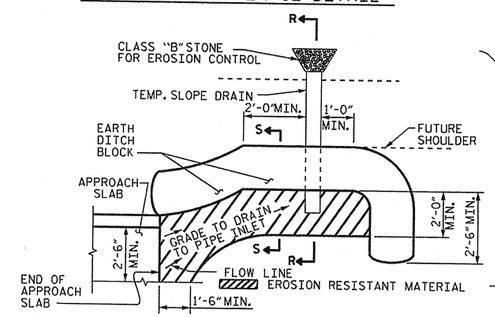

NOTE: IMMEDIATELY AFTER THE CONSTRUCTION OF THE APPROACH SLAB, THE CONTRACTOR SHALL PROVIDE TEMPORARY BERM AND SLOPE DRAIN. CONTRACTOR SHALL GRADE TO PIPE INLET AND PROVIDE EROSION RESISTANT MATERIAL AS SHOWN. THE EROSION RESISTANT MATERIAL SHALL BE EITHER 1) ASPHALT PLANT MIX, TYPE 1 OR TYPE 2, MIN. 2" DEPTH, 2) EROSION CONTROL MAT, OR 3) CONCRETE, AS DIRECTED BY THE ENGINEER. THE SLOPE DRAIN SHALL CONSIST OF A NON-PERFORATED TEMPORARY DRAINAGE PIPE, 12 INCHES IN DIAMETER.

PLAN VIEW

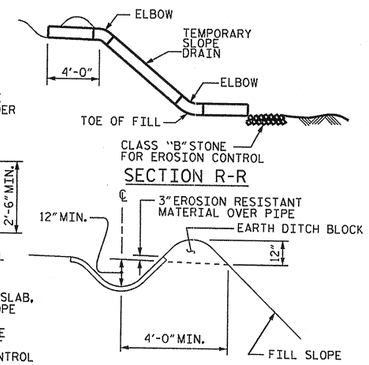

SECTION S-S

TEMPORARY BERM AND SLOPE DRAIN DETAILS

(TO BE USED WHEN SHOULDER BERM GUTTER IS REQUIRED)

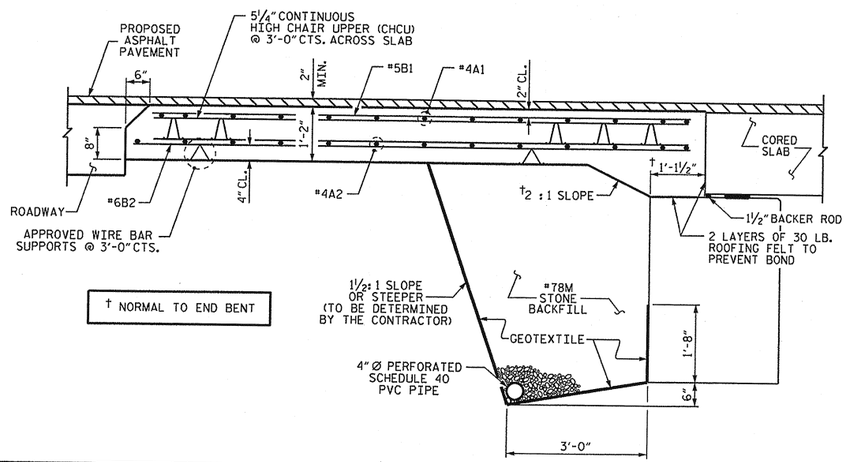

† NORMAL TO END BENT

SECTION THRU SLAB

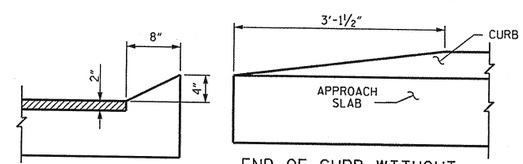

SECTION N-N

END OF CURB WITHOUT SHOULDER BERM GUTTER

CURB DETAILS

SPLICE LENGTHS		
BAR SIZE	EPOXY COATED	UNCOATED
#4	2'-0"	1'-9"
#5	2'-6"	2'-2"
#6	3'-10"	2'-7"

NORTH CAROLINA PROFESSIONAL SEAL 14045 ENGINEER TIMOTHY W. COGGINS

06/07/13

PROJECT NO. BD-5104K

NASH COUNTY

STATION: 16+90.00 -L-

STATE OF NORTH CAROLINA
DEPARTMENT OF TRANSPORTATION
RALEIGH

STANDARD
BRIDGE APPROACH SLAB
FOR PRESTRESSED CONCRETE
CORED SLAB UNIT
(SUB-REGIONAL TIER)
90° SKEW

REVISIONS						SHEET NO.
NO.	BY:	DATE:	NO.	BY:	DATE:	28
1			3			TOTAL SHEETS
2			4			63

ASSEMBLED BY :	K. P. SEDAI	DATE :	5/29/13
CHECKED BY :	M. D. PISO	DATE :	6/3/13
DRAWN BY : SHS/MAA 5-09	REV. 12-11	MAA/AAC	
CHECKED BY : BCH 5-09			

07-JUN-2013 12:22
S:\DPGI\Tlm\Division 4 LIBR\BD-5104K\ksedai\NCBDS\BD-5104K_Plans.dgn
tcoggins

STD. NO. BAS_36_90S

EROSION CONTROL PLAN

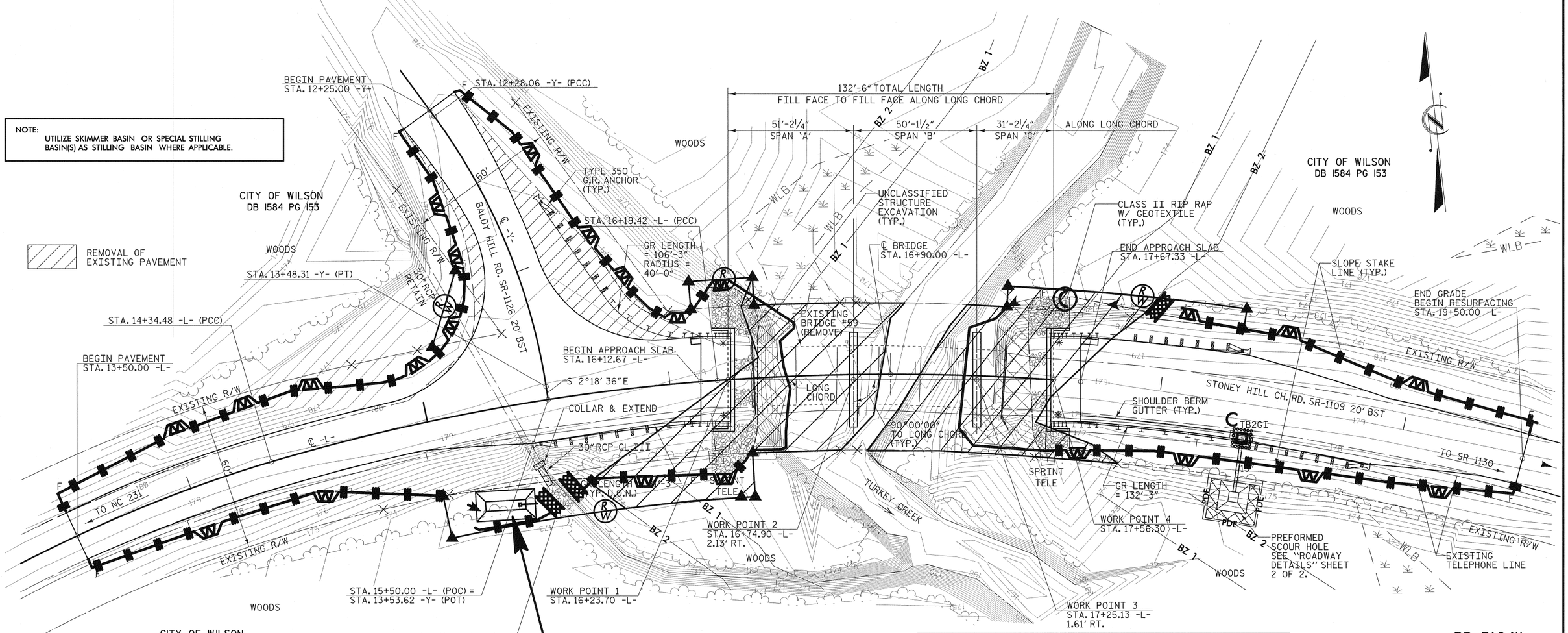

NOTE:
UTILIZE SKIMMER BASIN OR SPECIAL STILLING BASIN(S) AS STILLING BASIN WHERE APPLICABLE.

REMOVAL OF EXISTING PAVEMENT

NOTES: ANY DEVIATION FROM OPTIONS GIVEN WILL REQUIRE PRIOR APPROVAL BY ENGINEER.

ADDITIONAL EROSION CONTROL DEVICES MAY NEED TO BE INSTALLED AS DIRECTED BY THE ENGINEER.

ROADSIDE ENVIRONMENTAL UNIT
DEPARTMENT OF TRANSPORTATION
DIVISION OF HIGHWAYS
RALEIGH, N.C.

2012 STANDARD SPECIFICATIONS

THESE EROSION AND SEDIMENT CONTROL PLANS COMPLY WITH THE REGULATIONS SET FORTH BY THE NCG-010000 GENERAL CONSTRUCTION PERMIT EFFECTIVE AUGUST 3, 2011 ISSUED BY THE NORTH CAROLINA DEPARTMENT OF ENVIRONMENT AND NATURAL RESOURCES DIVISION OF WATER QUALITY.

ENVIRONMENTALLY SENSITIVE AREA
SEE PROJECT SPECIAL PROVISIONS

2012 STANDARD DRAWINGS

1604.01	Railroad Erosion Control Detail	1632.01	Rock Inlet Sediment Trap Type A
1605.01	Temporary Silt Fence	1632.02	Rock Inlet Sediment Trap Type B
1606.01	Special Sediment Control Fence	1632.03	Rock Inlet Sediment Trap Type C
1607.01	Gravel Construction Entrance	1633.01	Temporary Rock Silt Check Type A
1622.01	Temporary Berms and Slope Drains	1633.02	Temporary Rock Silt Check Type B
1630.01	Riser Basin	1634.01	Temporary Rock Sediment Dam Type A
1630.02	Silt Basin Type B	1634.02	Temporary Rock Sediment Dam Type B
1630.03	Temporary Silt Ditch	1635.01	Rock Pipe Inlet Sediment Trap Type A
1630.04	Stilling Basin	1635.02	Rock Pipe Inlet Sediment Trap Type B
1630.05	Temporary Diversion	1640.01	Coir Fiber Baffle
1630.06	Special Stilling Basin	1645.01	Temporary Stream Crossing
1631.01	Matting Installation		

Std. #	Description	Symbol
1605.01	Temporary Silt Fence	
1606.01	Special Sediment Control Fence	
1622.01	Temporary Berms and Slope Drains	
1630.03	Temporary Silt Ditch	TSD
1632.03	Rock Inlet Sediment Trap Type C	
1633.01	Temporary Rock Silt Check Type-A	
1633.02	Temporary Rock Silt Check Type-B	
	Wattle / Coir Fiber Wattle	EW CFW
	Wattle / Coir Fiber Wattle with Polyacrylamide (PAM)	
	Skimmer Basin	

PROJECT NO. BD-5104K

NASH COUNTY

STATION: 16+90.00 -L-

REPLACES BRIDGE NO. 59

STATE OF NORTH CAROLINA
DEPARTMENT OF TRANSPORTATION
RALEIGH

BRIDGE ON SR 1109
OVER TURKEY CREEK
BETWEEN SR 1126 & SR 1130

33'-10" CLEAR ROADWAY - 90° SKEW

REVISIONS						SHEET NO.
NO.	BY:	DATE:	NO.	BY:	DATE:	29
1			3			TOTAL SHEETS
2			4			63

7/2/2013 12:36:46 PM R:\Structures\Erosion Control\BD5104K_SD_EC.dgn

SKIMMER BASIN WITH BAFFLES DETAIL

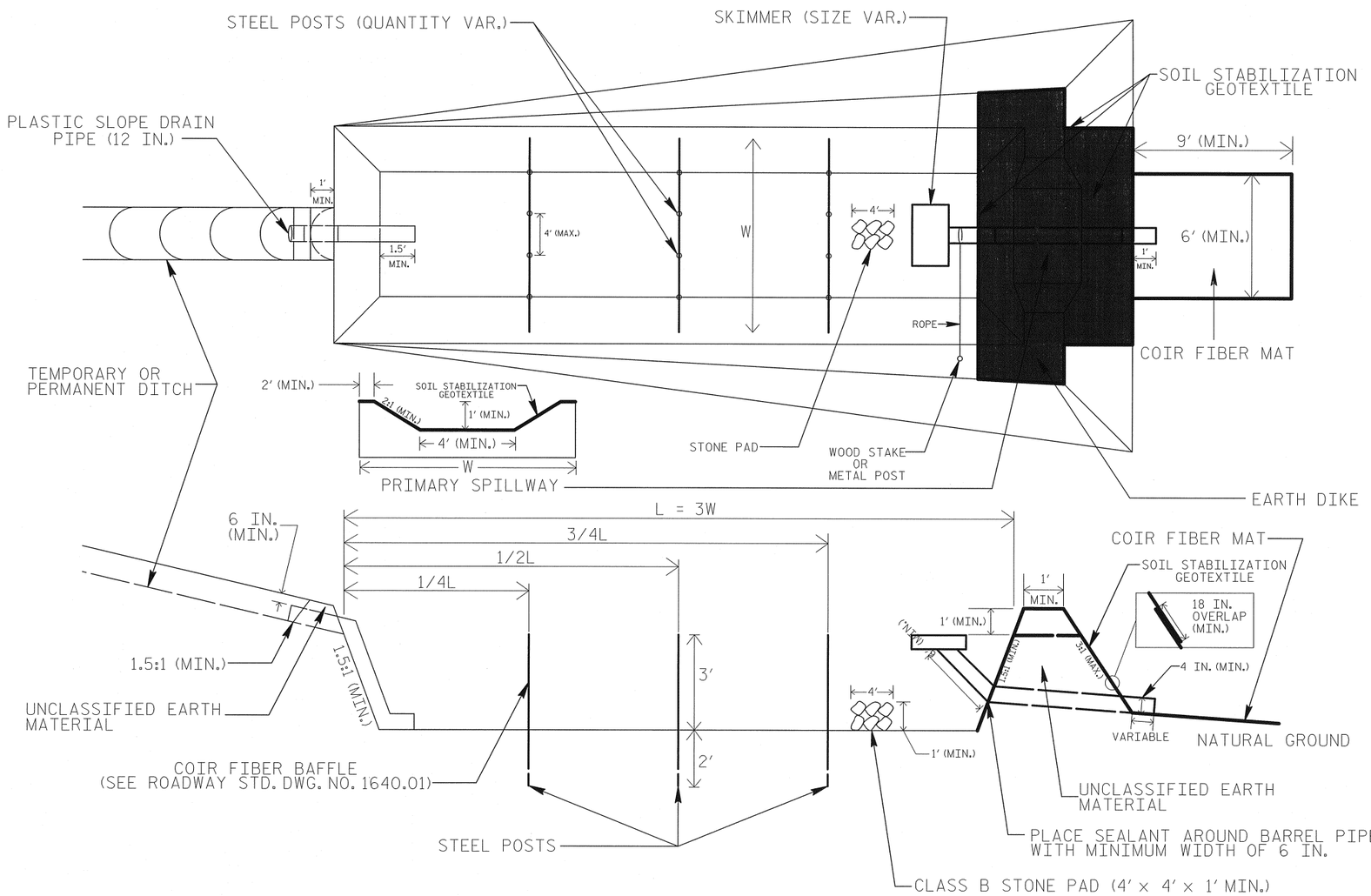

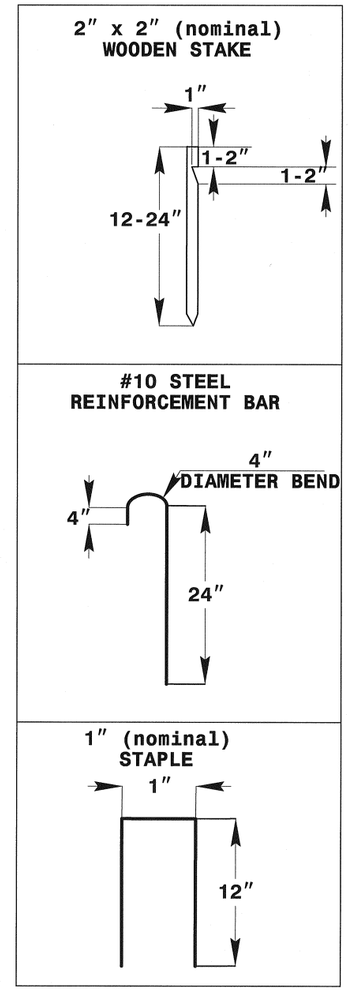

COIR FIBER MAT ANCHOR OPTIONS

NOTES

1. SEED AND PLACE MATTING FOR EROSION CONTROL ON INTERIOR AND EXTERIOR SIDESLOPES.
2. LIMIT EARTH DIKE HEIGHT TO 5 FT.
3. FOR BASIN DEPTH OF 3 FT., THE MINIMUM BASIN WIDTH SHALL BE 9 FT.
4. DETERMINE PRIMARY SPILLWAY WEIR LENGTH (FT.) USING Q/0.4, WHERE Q IS FLOW RATE (CFS) INTO BASIN.
5. PLASTIC SLOPE DRAIN PIPE AT INLET OF BASIN MAY BE REPLACED BY FILTRATION GEOTEXTILE OR TARP AS DIRECTED.
6. SOIL STABILIZATION GEOTEXTILE FOR PRIMARY SPILLWAY SHALL BE ONE CONTINUOUS PIECE OF MATERIAL OR OVERLAPPED 18 IN. (MIN.).

PROJECT NO. BD-5104K

NASH COUNTY

STATION: 16+90.00 -L-

REPLACES BRIDGE NO. 59

STATE OF NORTH CAROLINA
DEPARTMENT OF TRANSPORTATION
RALEIGH

BRIDGE ON SR 1109
OVER TURKEY CREEK
BETWEEN SR 1126 & SR 1130

33'-10" CLEAR ROADWAY - 90° SKEW

REVISIONS						SHEET NO.
NO.	BY:	DATE:	NO.	BY:	DATE:	30
1			3			TOTAL SHEETS
2			4			63

ROADSIDE ENVIRONMENTAL UNIT
DEPARTMENT OF TRANSPORTATION
DIVISION OF HIGHWAYS
RALEIGH, N.C.

2012 STANDARD SPECIFICATIONS

NOTES: ANY DEVIATION FROM OPTIONS GIVEN WILL REQUIRE PRIOR APPROVAL BY ENGINEER.

ADDITIONAL EROSION CONTROL DEVICES MAY NEED TO BE INSTALLED AS DIRECTED BY THE ENGINEER.

NOT TO SCALE

7/2/2013 12:13:39 PM R:\Structures\Erosion Control\BD5104K_SD_EC_01.dgn

WATTLE WITH POLYACRYLAMIDE (PAM) DETAIL

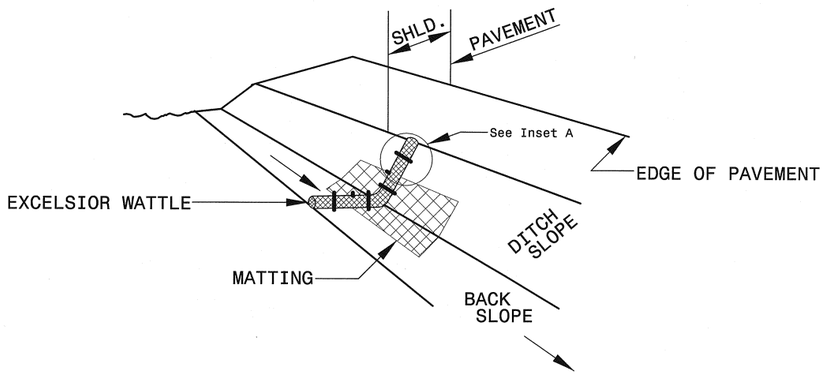

ISOMETRIC VIEW

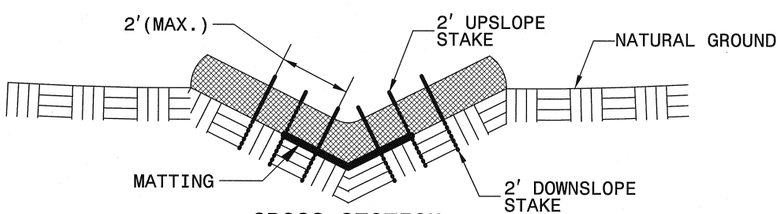

CROSS SECTION VEE DITCH

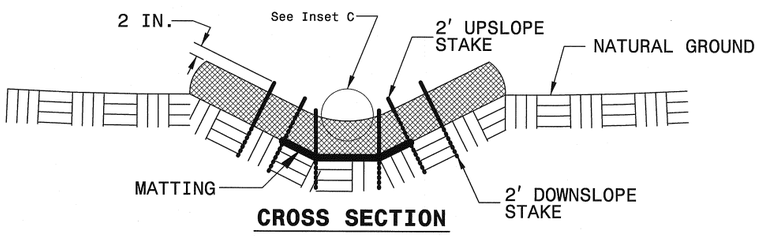

CROSS SECTION TRAPEZOIDAL DITCH

NOTES:

USE MINIMUM 12 IN. DIAMETER EXCELSIOR WATTLE.

USE 2 FT. WOODEN STAKES WITH A 2 IN. BY 2 IN. NOMINAL CROSS SECTION.

ONLY INSTALL WATTLE(S) TO A HEIGHT IN DITCH SO FLOW WILL NOT WASH AROUND WATTLE AND SCOUR DITCH SLOPES AND AS DIRECTED.

INSTALL A MINIMUM OF 2 UPSLOPE STAKES AND 4 DOWNSLOPE STAKES AT AN ANGLE TO WEDGE WATTLE TO BOTTOM OF DITCH.

PROVIDE STAPLES MADE OF 0.125 IN. DIAMETER STEEL WIRE FORMED INTO A U SHAPE NOT LESS THAN 12" IN LENGTH.

INSTALL STAPLES APPROXIMATELY EVERY 1 LINEAR FOOT ON BOTH SIDES OF WATTLE AND AT EACH END TO SECURE IT TO THE SOIL.

INSTALL MATTING IN ACCORDANCE WITH SECTION 1631 OF THE STANDARD SPECIFICATIONS.

PRIOR TO POLYACRYLAMIDE (PAM) APPLICATION, OBTAIN A SOIL SAMPLE FROM PROJECT LOCATION, AND FROM OFFSITE MATERIAL, AND ANALYZE FOR APPROPRIATE PAM FLOCCULANT TO BE APPLIED TO EACH WATTLE.

INITIALLY APPLY 2 OUNCES OF ANIONIC OR NEUTRALLY CHARGED PAM OVER WATTLE WHERE WATER WILL FLOW AND 1 OUNCE OF PAM ON MATTING ON EACH SIDE OF WATTLE. REAPPLY PAM AFTER EVERY RAINFALL EVENT THAT IS EQUAL TO OR EXCEEDS 0.50 IN.

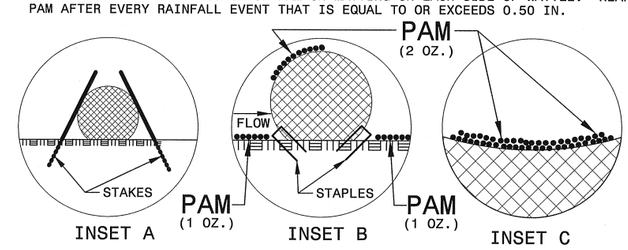

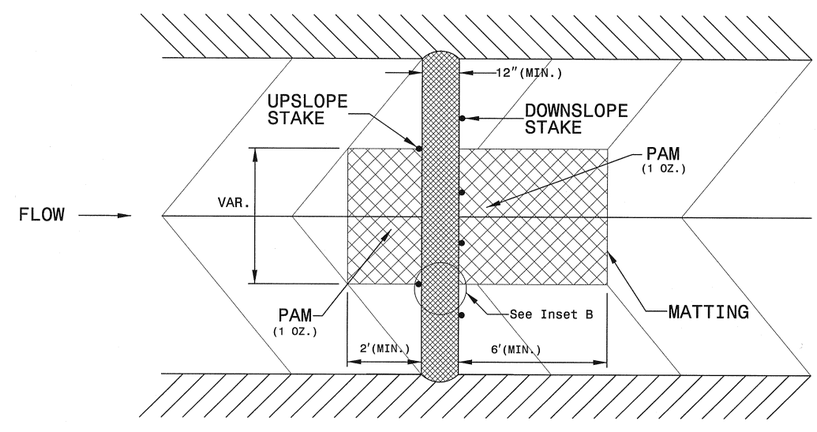

TOP VIEW

ROADSIDE ENVIRONMENTAL UNIT
DEPARTMENT OF TRANSPORTATION
DIVISION OF HIGHWAYS
RALEIGH, N.C.

2012 STANDARD SPECIFICATIONS

NOTES: ANY DEVIATION FROM OPTIONS GIVEN WILL REQUIRE PRIOR APPROVAL BY ENGINEER.

ADDITIONAL EROSION CONTROL DEVICES MAY NEED TO BE INSTALLED AS DIRECTED BY THE ENGINEER.

PROJECT NO. BD-5104K
NASH COUNTY
STATION: 16+90.00 -L-

REPLACES BRIDGE NO. 59

STATE OF NORTH CAROLINA
DEPARTMENT OF TRANSPORTATION
RALEIGH

BRIDGE ON SR 1109
OVER TURKEY CREEK
BETWEEN SR 1126 & SR 1130

33'-10" CLEAR ROADWAY - 90° SKEW

REVISIONS						SHEET NO.
NO.	BY:	DATE:	NO.	BY:	DATE:	31
1			3			TOTAL SHEETS
2			4			63

7/2/2013 12:39:31PM R:\Structures\Erosion Control\BD5104K_SD_EC_01.dgn

WATTLE BARRIER DETAIL

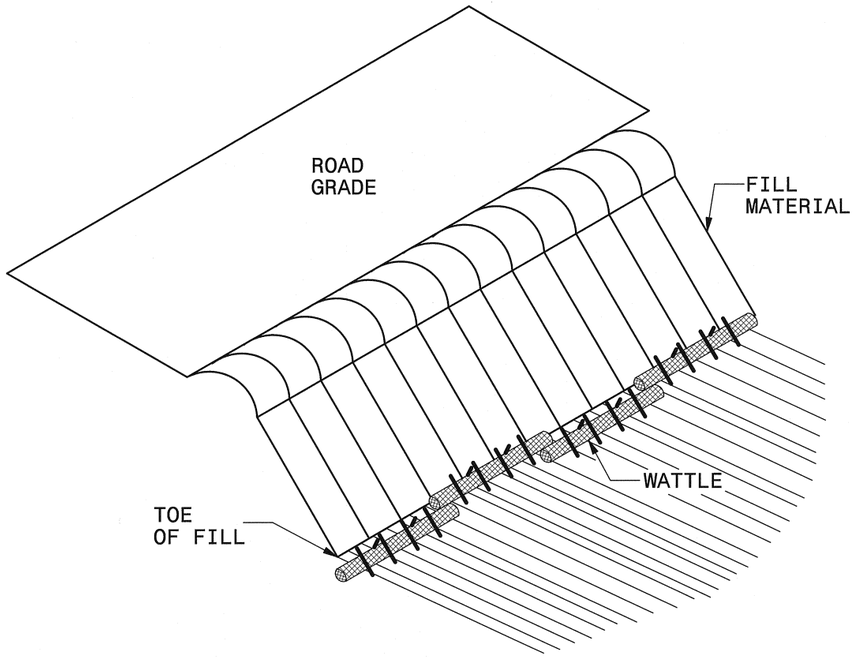

ISOMETRIC VIEW

NOTES:

USE MINIMUM 18 IN. NOMINAL DIAMETER EXCELSIOR WATTLE AND LENGTH OF 10 FT.

EXCAVATE A 2 TO 3 INCH TRENCH FOR WATTLE TO BE PLACED.

DO NOT PLACE WATTLES ON TOE OF SLOPE.

USE 2 FT. WOODEN STAKES WITH A 2 IN. BY 2 IN. NOMINAL CROSS SECTION.

INSTALL A MINIMUM OF 2 UPSLOPE STAKES AND 4 DOWNSLOPE STAKES AT AN ANGLE TO WEDGE WATTLE TO GROUND.

PROVIDE STAPLES MADE OF 0.125 IN. DIAMETER STEEL WIRE FORMED INTO A U SHAPE NOT LESS THAN 12″ IN LENGTH.

INSTALL STAPLES APPROXIMATELY EVERY 1 LINEAR FOOT ON BOTH SIDES OF WATTLE AND AT EACH END TO SECURE IT TO THE SOIL.

FOR BREAKS ALONG LARGE SLOPES, USE MAXIMUM SPACING OF 20 FT.

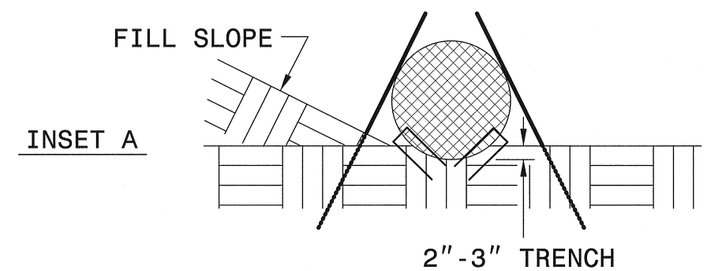

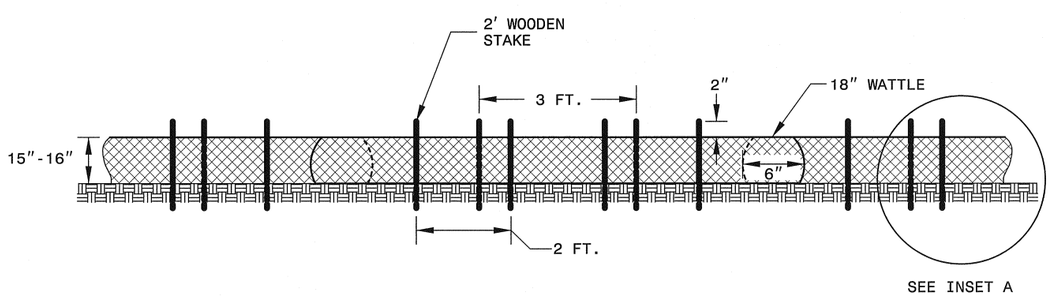

FRONT VIEW

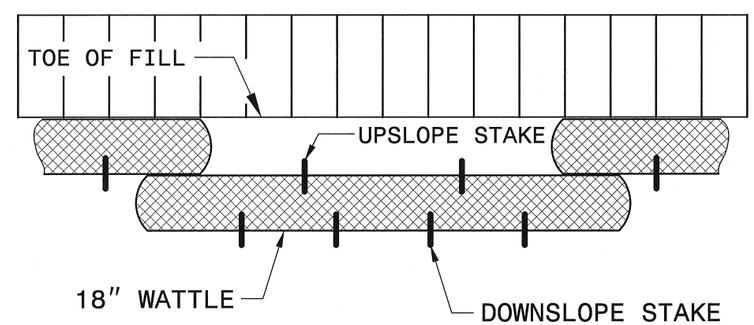

TOP VIEW

PROJECT NO. BD-5104K

NASH COUNTY

STATION: 16+90.00 -L-

REPLACES BRIDGE NO. 59

STATE OF NORTH CAROLINA
DEPARTMENT OF TRANSPORTATION
RALEIGH

BRIDGE ON SR 1109
OVER TURKEY CREEK
BETWEEN SR 1126 & SR 1130

33′-10″ CLEAR ROADWAY - 90° SKEW

REVISIONS						SHEET NO.
NO.	BY:	DATE:	NO.	BY:	DATE:	32
1			3			TOTAL SHEETS
2			4			63

ROADSIDE ENVIRONMENTAL UNIT
DEPARTMENT OF TRANSPORTATION
DIVISION OF HIGHWAYS
RALEIGH, N.C.

2012 STANDARD SPECIFICATIONS

NOTES: ANY DEVIATION FROM OPTIONS GIVEN WILL REQUIRE PRIOR APPROVAL BY ENGINEER.

ADDITIONAL EROSION CONTROL DEVICES MAY NEED TO BE INSTALLED AS DIRECTED BY THE ENGINEER.

7/2/2013 12:31:24 PM R:\Structures\Erosion Control\BD5104K_SD_EC_01.dgn

DIVISION OF HIGHWAYS
STATE OF NORTH CAROLINA

SOIL STABILIZATION TIMEFRAMES

SITE DESCRIPTION	STABILIZATION TIME	TIMEFRAME EXCEPTIONS
PERIMETER DIKES, SWALES, DITCHES AND SLOPES	7 DAYS	NONE
HIGH QUALITY WATER (HQW) ZONES	7 DAYS	NONE
SLOPES STEEPER THAN 3:1	7 DAYS	IF SLOPES ARE 10' OR LESS IN LENGTH AND ARE NOT STEEPER THAN 2:1, 14 DAYS ARE ALLOWED.
SLOPES 3:1 OR FLATTER	14 DAYS	7 DAYS FOR SLOPES GREATER THAN 50' IN LENGTH.
ALL OTHER AREAS WITH SLOPES FLATTER THAN 4:1	14 DAYS	NONE, EXCEPT FOR PERIMETERS AND HQW ZONES.

PROJECT NO. BD-5104K
NASH COUNTY
STATION: 16+90.00 -L-

REPLACES BRIDGE NO. 59

STATE OF NORTH CAROLINA
DEPARTMENT OF TRANSPORTATION
RALEIGH

BRIDGE ON SR 1109
OVER TURKEY CREEK
BETWEEN SR 1126 & SR 1130

33'-10" CLEAR ROADWAY - 90° SKEW

REVISIONS						SHEET NO.
NO.	BY:	DATE:	NO.	BY:	DATE:	33
1			3			TOTAL SHEETS
2			4			63

ROADSIDE ENVIRONMENTAL UNIT
DEPARTMENT OF TRANSPORTATION
DIVISION OF HIGHWAYS
RALEIGH, N.C.

2012 STANDARD SPECIFICATIONS

NOTES: ANY DEVIATION FROM OPTIONS GIVEN WILL REQUIRE PRIOR APPROVAL BY ENGINEER.

ADDITIONAL EROSION CONTROL DEVICES MAY NEED TO BE INSTALLED AS DIRECTED BY THE ENGINEER.

7/2/2013 12:36:7 PM R:\Structures\Erosion Control\BD5104_SD_EC_04.dgn

STATE	STATE PROJECT REFERENCE NO.	SHEET NO.	TOTAL SHEETS
N.C.	BD-5104K	34	63

STATE PROJ. NO.	F. A. PROJ. NO.	DESCRIPTION

PLANTING DETAILS

SEEDLING / LINER BAREROOT PLANTING DETAIL

HEALING IN

1. Locate a healing-in site in a shady, well protected area.
2. Excavate a flat bottom trench 12 inches deep and provide drainage.

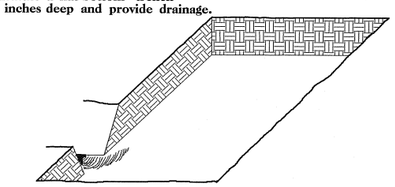

3. Backfill the trench with 2 inches well rotted sawdust. Place a 2 inch layer of well rotted sawdust at a sloping angle at one end of the trench.

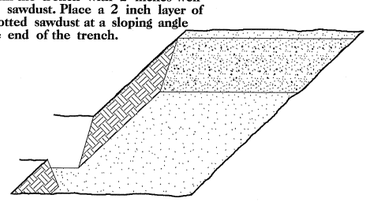

4. Place a single layer of plants against the sloping end so that the root collar is at ground level.

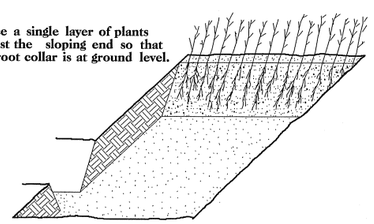

5. Place a 2 inch layer of well rotted sawdust over the roots maintaining a sloping angle.

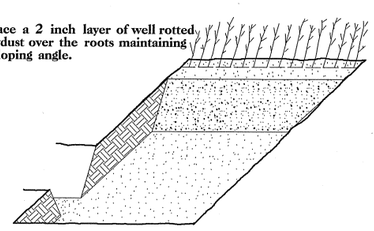

6. Repeat layers of plants and sawdust as necessary and water thoroughly.

DIBBLE PLANTING METHOD
USING THE KBC PLANTING BAR

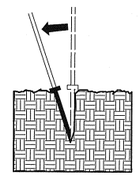

1. Insert planting bar as shown and pull handle toward planter.

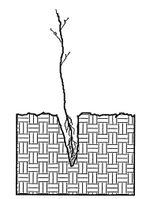

2. Remove planting bar and place seedling at correct depth.

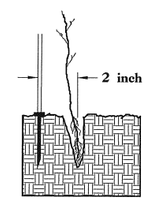

3. Insert planting bar 2 inches toward planter from seedling.

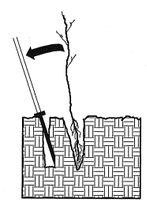

4. Pull handle of bar toward planter, firming soil at bottom.

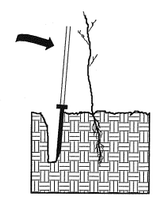

5. Push handle forward firming soil at top.

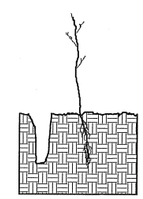

6. Leave compaction hole open. Water thoroughly.

PLANTING NOTES:

PLANTING BAG
During planting, seedlings shall be kept in a moist canvas bag or similar container to prevent the root systems from drying.

KBC PLANTING BAR
Planting bar shall have a blade with a triangular cross section, and shall be 12 inches long, 4 inches wide and 1 inch thick at center.

ROOT PRUNING
All seedlings shall be root pruned, if necessary, so that no roots extend more than 10 inches below the root collar.

REFORESTATION

☐ TREE REFORESTATION SHALL BE PLANTED 6 FT. TO 10 FT. ON CENTER, RANDOM SPACING, AVERAGING 8 FT. ON CENTER, APPROXIMATELY 680 PLANTS PER ACRE.

REFORESTATION

MIXTURE, TYPE, SIZE, AND FURNISH SHALL CONFORM TO THE FOLLOWING:

34%	LIRIODENDRON TULIPIFERA	TULIP POPLAR	12 in - 18 in BR
33%	PLATANUS OCCIDENTALIS	SYCAMORE	12 in - 18 in BR
33%	FRAXINUS PENNSYLVANICA	GREEN ASH	12 in - 18 in BR

ROADSIDE ENVIRONMENTAL UNIT
DEPARTMENT OF TRANSPORTATION
DIVISION OF HIGHWAYS
RALEIGH, N.C.

2012 STANDARD SPECIFICATIONS

NOTES: ANY DEVIATION FROM OPTIONS GIVEN WILL REQUIRE PRIOR APPROVAL BY ENGINEER.

ADDITIONAL EROSION CONTROL DEVICES MAY NEED TO BE INSTALLED AS DIRECTED BY THE ENGINEER.

REFORESTATION DETAIL SHEET

N.C.D.O.T. - ROADSIDE ENVIRONMENTAL UNIT

7/2/2013 12:3:09 PM R:\Structures\Erosion Control\BD5104K_SD_EC_01.dgn