WBS # 45350.3.13

CONTRACT #

F.A. PROJECT NO. BRZ-1109 (11)

EXISTING BRIDGE No. 60
24'-0" CLEAR ROADWAY
SPANS: 1 @ 18'-0"; 1 @ 17'-0",
1 @ 16'-9"; 1 @ 18'-0"
REINF. CONC. FLOOR ON TIMBER JOISTS
END BENTS & INT. BENTS-
TIMBER CAPS ON TIMBER PILES

TBM: BM#2
RR SPIKE IN BASE OF 18" OAK
48.64' RIGHT OF -L- STA. 26+10.17
ELEV. 175.45

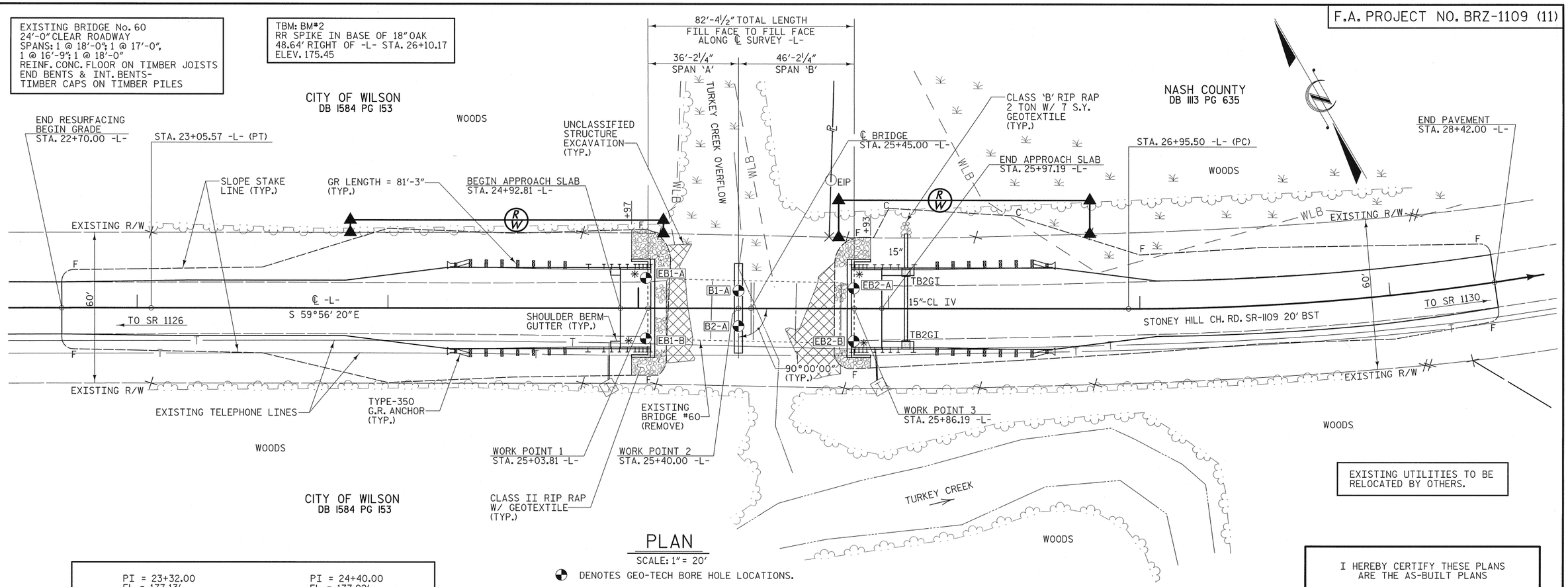

EXISTING UTILITIES TO BE RELOCATED BY OTHERS.

PLAN

SCALE: 1" = 20'

PI = 23+32.00
EL = 177.13'
VC = 90'
K = 99
D.S. = 50 mph

(-)0.1690% △ (+)0.7387%

PI = 24+40.00
EL = 177.92'
VC = 90'
K = 87
D.S. = 50 mph

(+)0.7387% △ (-)0.3000%

GRADE DATA
-L- (SR 1109)

◐ DENOTES GEO-TECH BORE HOLE LOCATIONS.

✳ DENOTES TYPE III GUARDRAIL CONNECTION REQ'D. SEE "GUARDRAIL ANCHORAGE FOR VERTICAL CONCRETE BARRIER RAIL" SHEET.

NOTE: GUARDRAIL LENGTHS AS SHOWN INCLUDE ANCHOR UNITS.

FOR PAVEMENT LAYOUT & R/W LAYOUT SEE "ROADWAY DETAILS" SHEET.

I HEREBY CERTIFY THESE PLANS ARE THE AS-BUILT PLANS

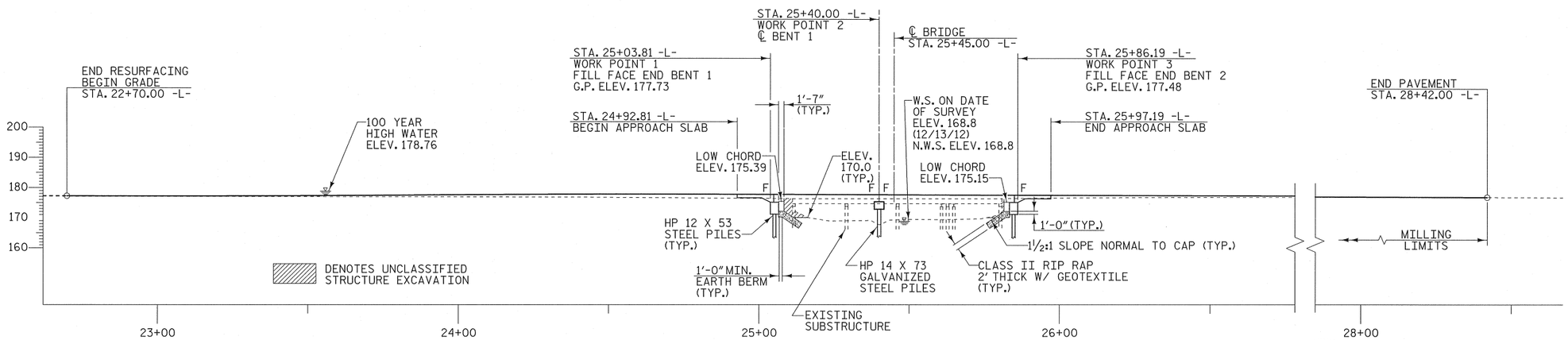

NOTE: THE APPROXIMATE NATURAL GROUND ELEVATIONS ARE ALONG THE EDGE OF THE BRIDGE ON THE UPSTREAM SIDE.

PROFILE ALONG ℄ SURVEY

SCALE: 1" = 20'

F = FIXED END

PROJECT NO. BD-5104L

NASH COUNTY

STATION: 25+45.00 -L-

REPLACES BRIDGE NO. 60 SHEET 1 OF 2

STATE OF NORTH CAROLINA
DEPARTMENT OF TRANSPORTATION
RALEIGH

GENERAL DRAWING

BRIDGE ON SR 1109
OVER TURKEY CREEK OVERFLOW
BETWEEN SR 1126 & SR 1130

30'-10" CLEAR ROADWAY - 90° SKEW

NORTH CAROLINA PROFESSIONAL SEAL 19661 ENGINEER L. KEVIN AUSTIN 7/2/13

PLANS PREPARED BY:
MULKEY ENGINEERS & CONSULTANTS
PO Box 33127
RALEIGH, N.C. 27636
(919) 851-1912
(919) 851-1918 (FAX)
WWW.MULKEYINC.COM

REVISIONS						SHEET NO.
NO.	BY:	DATE:	NO.	BY:	DATE:	35
1			3			TOTAL SHEETS
2			4			63

DRAWN BY : W. B. ALLEN DATE : 3/13
CHECKED BY : L. K. AUSTIN DATE : 4/13

7/2/2013 1:28:47 PM R:\Structures\BD5104L_SD_GD_01.dgn

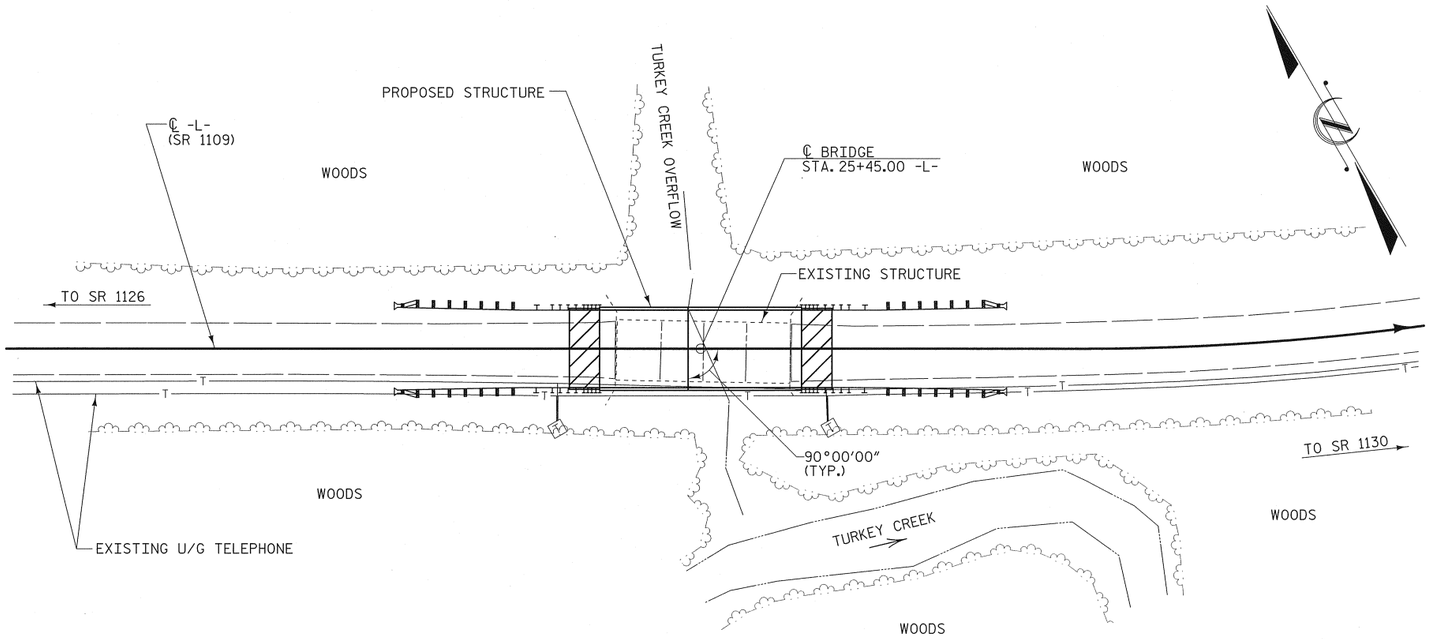

LOCATION SKETCH

TOTAL BILL OF MATERIAL

	REMOVAL OF EXISTING STRUCTURE	UNCLASSIFIED STRUCTURE EXCAVATION	CLASS A CONCRETE	BRIDGE APPROACH SLABS	REINFORCING STEEL	HP 12 X 53 STEEL PILES		HP 14 X 73 GALVANIZED STEEL PILES		STEEL PILE POINTS	PREDRILLING FOR PILES	PILE REDRIVES
	LUMP SUM	LUMP SUM	CU. YARDS	LUMP SUM	LBS.	NO.	LIN. FT.	NO.	LIN. FT.	EACH	LIN. FT.	EACH
SUPERSTRUCTURE	LUMP SUM			LUMP SUM								
END BENT 1		LUMP SUM	21.6		2636	7	210					
BENT 1			10.8		2162			8	420	8	100	4
END BENT 2		LUMP SUM	21.6		2636	7	125			7		
TOTAL	LUMP SUM	LUMP SUM	54.0	LUMP SUM	7434	14	335	8	420	15	100	4

TOTAL BILL OF MATERIAL

	VERTICAL CONCRETE BARRIER RAIL	RIP RAP CLASS II (2'-0" THICK)	GEOTEXTILE FOR DRAINAGE	ELASTOMERIC BEARINGS	3'-0" X 1'-9" PRESTRESSED CONCRETE CORED SLABS	
	LIN. FT.	TONS	SQ. YARDS	LUMP SUM	NO.	LIN. FT.
SUPERSTRUCTURE	160.25			LUMP SUM	22	880
END BENT 1		91	101			
BENT 1						
END BENT 2		74	83			
TOTAL	160.25	165	184	LUMP SUM	22	880

HYDROGRAPHIC DATA:

DESIGN DISCHARGE -	4800 CFS
FREQUENCY OF DESIGN FLOOD -	25 YEAR
DESIGN HIGH WATER ELEVATION -	176.7
DRAINAGE AREA -	37.5 SQ. MI.
BASE DISCHARGE (Q 100) -	7323 (FEMA) CFS
BASE HIGH WATER ELEVATION -	178.76

OVERTOPPING FLOOD DATA:

OVERTOPPING DISCHARGE -	5200 CFS
FREQUENCY OF OVERTOPPING FLOOD -	25+ YEAR
OVERTOPPING FLOOD ELEVATION -	177.2

OVERTOPPING OCCURS AT ROADWAY STA. 23+03.80 -L-
CENTERLINE AT SAG

NOTES

ASSUMED LIVE LOAD = HL-93 OR ALTERNATE LOADING.

THIS BRIDGE HAS BEEN DESIGNED IN ACCORDANCE WITH THE AASHTO LRFD BRIDGE DESIGN SPECIFICATIONS.

THIS BRIDGE IS LOCATED IN SEISMIC ZONE 1.

FOR EROSION CONTROL MEASURES SEE EROSION CONTROL PLANS.

FOR OTHER DESIGN DATA AND GENERAL NOTES, SEE SHEET SN.

REMOVAL OF THE EXISTING BRIDGE SHALL BE PERFORMED SO AS NOT TO ALLOW DEBRIS TO FALL INTO THE WATER. THE CONTRACTOR SHALL REMOVE THE BRIDGE AND SUBMIT PLANS FOR THE DEMOLITION IN ACCORDANCE WITH ARTICLE 402-2 OF THE STANDARD SPECIFICATIONS.

THE MATERIAL SHOWN ON SHEET 1 IN THE CROSS-HATCHED AREA SHALL BE EXCAVATED FOR A DISTANCE OF 25 FT. EACH SIDE OF CENTERLINE ROADWAY AS DIRECTED BY THE ENGINEER. THIS WORK WILL BE PAID FOR AT THE CONTRACT LUMP SUM PRICE FOR UNCLASSIFIED STRUCTURE EXCAVATION.

THE SUBSTRUCTURE OF THE EXISTING BRIDGE INDICATED ON THE PLANS IS FROM THE BEST INFORMATION AVAILABLE. SINCE THIS INFORMATION IS SHOWN FOR THE CONVENIENCE OF THE CONTRACTOR, THE CONTRACTOR SHALL HAVE NO CLAIM WHATSOEVER AGAINST THE DEPARTMENT OF TRANSPORTATION FOR ANY DELAYS OR ADDITIONAL COST INCURRED BASED ON DIFFERENCES BETWEEN THE EXISTING BRIDGE SUBSTRUCTURE SHOWN ON THE PLANS AND THE ACTUAL CONDITIONS AT THE PROJECT SITE.

THIS STRUCTURE HAS BEEN DESIGNED IN ACCORDANCE WITH "HEC 18 - EVALUATING SCOUR AT BRIDGES".

THE CONTRACTOR SHALL PROVIDE INDEPENDENT ASSURANCE SAMPLES OF REINFORCING STEEL AS FOLLOWS: FOR PROJECTS UP TO 400 TONS OF REINFORCING STEEL, ONE 30 INCH SAMPLE OF EACH SIZE BAR USED, AND FOR PROJECTS OVER 400 TONS OF REINFORCING STEEL, TWO 30 INCH SAMPLES OF EACH SIZE BAR USED. THE BARS FROM WHICH THE SAMPLES ARE TAKEN MUST THEN BE SPLICED WITH REPLACEMENT BARS OF THE SIZE AND LENGTH OF THE SAMPLE, PLUS A MINIMUM LAP SPLICE OF THIRTY BAR DIAMETERS. PAYMENT FOR THE SAMPLES OF REINFORCING STEEL SHALL BE CONSIDERED INCIDENTAL TO VAROIUS PAY ITEMS.

FOR PILES SEE SECTION 450 OF THE STANDARD SPECIFICATIONS.

PILES AT END BENT NO. 1 ARE DESIGNED FOR A FACTORED RESISTANCE OF 55 TONS PER PILE.

DRIVE PILES AT END BENT NO. 1 TO A REQUIRED DRIVING RESISTANCE OF 95 TONS PER PILE.

PILES AT END BENT NO. 2 ARE DESIGNED FOR A FACTORED RESISTANCE OF 61 TONS PER PILE.

DRIVE PILES AT END BENT NO. 2 TO A REQUIRED DRIVING RESISTANCE OF 105 TONS PER PILE.

STEEL H-PILE POINTS ARE REQUIRED FOR STEEL H-PILES AT END BENT NO. 2. FOR STEEL PILE POINTS, SEE SECTION 450 OF THE STANDARD SPECIFICATIONS.

PILES AT BENT NO. 1 ARE DESIGNED FOR A FACTORED RESISTANCE OF 88 TONS PER PILE.

DRIVE PILES AT BENT NO. 1 TO A REQUIRED DRIVING RESISTANCE OF 175 TONS PER PILE. THIS REQUIRED DRIVING RESISTANCE INCLUDES ADDITIONAL RESISTANCE FOR DOWNDRAG OR SCOUR.

FOR INTERIOR BENT 1, ONLY PARTIAL GALVANIZING OF THE PILES IS REQUIRED. SEE INTERIOR BENT SHEET FOR REQUIRED GALVANIZED LENGTHS. PAYMENT FOR PARTIALLY GALVANIZED PILES WILL BE MADE UNDER THE CONTRACT UNIT PRICE FOR GALVANIZED STEEL PILES.

INSTALL PILES AT BENT NO. 1 TO A TIP ELEVATION NO HIGHER THAN 152 FT. (L), AND 143 FT. (R & C).

THE SCOUR CRITICAL ELEVATION FOR BENT NO. 1 IS ELEVATION 160 FT. SCOUR CRITICAL ELEVATIONS ARE USED TO MONITOR POSSIBLE SCOUR PROBLEMS DURING THE LIFE OF THE STRUCTURE.

STEEL H-PILE POINTS ARE REQUIRED FOR STEEL H-PILES AT BENT NO. 1 FOR STEEL PILE POINTS, SEE SECTION 450 OF THE STANDARD SPECIFICATIONS.

IT HAS BEEN ESTIMATED THAT A HAMMER WITH AN EQUIVALENT RATED ENERGY IN THE RANGE OF 30 TO 60 FT-KIPS PER BLOW WILL BE REQUIRED TO DRIVE PILES AT BENT NO. 1. THIS ESTIMATED ENERGY RANGE DOES NOT RELEASE THE CONTRACTOR FROM PROVIDING DRIVING EQUIPMENT IN ACCORDANCE WITH SUBARTICLE 450-3(D)(2) OF THE STANDARD SPECIFICATIONS.

IF NECESSARY, PREDRILL PILE LCATIONS AT BENT NO. 1 TO ELEVATION 143 FEET WITH EQUIPMENT THAT WILL RESULT IN A MAXIMUM PREDRILLING DIAMETER OF 24". FOR PREDRILLING PILES, SEE SECTION 450 OF THE STANDARD SPECIFICATIONS.

TEMPORARY STEEL CASINGS MAY BE REQUIRED FOR PREDRILLING AT BENT NO. 1.

ADT = 920 FOR YEAR 2005.

ROADWAY APPROACH EMBANKMENT SHALL BE WIDENED AS NECESSARY FOR GUARDRAIL INSTALLATION.

FOR SUBMITTAL OF WORKING DRAWINGS, SEE SPECIAL PROVISIONS.

FOR FALSEWORK AND FORMWORK, SEE SPECIAL PROVISIONS.

FOR CRANE SAFETY, SEE SPECIAL PROVISIONS.

FOR GROUT FOR STRUCTURES, SEE SPECIAL PROVISIONS.

NO DECK DRAINS REQUIRED.

ASPHALT WEARING SURFACE IS INCLUDED IN ROADWAY QUANTITY ON ROADWAY PLANS.

NORTH CAROLINA PROFESSIONAL SEAL 19661 ENGINEER L. KEVIN AUSTIN 7/2/13

PLANS PREPARED BY:
MULKEY ENGINEERS & CONSULTANTS
PO Box 33127
Raleigh, N.C. 27636
(919) 851-1912
(919) 851-1918 (FAX)
WWW.MULKEYINC.COM
NC LICENSE NO. C-1021

PROJECT NO. BD-5104L
NASH COUNTY
STATION: 25+45.00 -L-

REPLACES BRIDGE NO. 60 SHEET 2 OF 2

STATE OF NORTH CAROLINA
DEPARTMENT OF TRANSPORTATION
RALEIGH

GENERAL DRAWING

BRIDGE ON SR 1109
OVER TURKEY CREEK OVERFLOW
BETWEEN SR 1126 & SR 1130

30'-10" CLEAR ROADWAY - 90° SKEW

REVISIONS						SHEET NO.
NO.	BY:	DATE:	NO.	BY:	DATE:	36
1			3			TOTAL SHEETS
2			4			63

DRAWN BY : W. B. ALLEN DATE : 5/13
CHECKED BY : L. K. AUSTIN DATE : 6/13

7/2/2013 1:30:07 PM R:\Structures\BD5104L_SD_GD_02.dgn

LOAD AND RESISTANCE FACTOR RATING (LRFR) SUMMARY FOR PRESTRESSED CONCRETE GIRDERS

LEVEL		VEHICLE	WEIGHT (W) (TONS)	CONTROLLING LOAD RATING	MINIMUM RATING FACTORS (RF)	TONS = W X RF	STRENGTH I LIMIT STATE											SERVICE III LIMIT STATE						COMMENT NUMBER
								MOMENT					SHEAR						MOMENT					
							LIVELOAD FACTORS	DISTRIBUTION FACTORS (DF)	RATING FACTOR	SPAN	GIRDER LOCATION	DISTANCE FROM LEFT END OF SPAN (ft)	DISTRIBUTION FACTORS (DF)	RATING FACTOR	SPAN	GIRDER LOCATION	DISTANCE FROM LEFT END OF SPAN (ft)	LIVELOAD FACTORS	DISTRIBUTION FACTORS (DF)	RATING FACTOR	SPAN	GIRDER LOCATION	DISTANCE FROM LEFT END OF SPAN (ft)	
DESIGN LOAD RATING		HL-93(Inv)	N/A	(1)	1.032	--	1.75	0.28	1.36	35'	EL	17	0.561	**1.03**	35'	EL	**1.7**	0.80	0.28	1.05	35'	EL	17	
		HL-93(Opr)	N/A	--	1.338	--	1.35	0.28	1.77	35'	EL	17	0.561	1.34	35'	EL	1.7	N/A	--	--	--	--	--	
		HS-20(Inv)	36.000	(2)	1.189	42.810	1.75	0.28	1.79	35'	EL	13.6	0.561	**1.19**	35'	EL	**1.7**	0.80	0.28	1.39	35'	EL	17	
		HS-20(Opr)	36.000	--	1.542	55.494	1.35	0.28	2.32	35'	EL	13.6	0.561	1.54	35'	EL	1.7	N/A	--	--	--	--	--	
LEGAL LOAD RATING	SV	SNSH	13.500	--	2.400	32.402	1.40	0.28	3.89	35'	EL	17	0.561	3.06	35'	EL	1.7	0.80	0.28	2.40	35'	EL	17	
		SNGARBS2	20.000	--	2.052	41.044	1.40	0.28	3.29	35'	EL	13.6	0.561	2.32	35'	EL	1.7	0.80	0.28	2.05	35'	EL	13.6	
		SNAGRIS2	22.000	--	2.053	45.174	1.40	0.28	3.26	35'	EL	13.6	0.561	2.21	35'	EL	1.7	0.80	0.28	2.05	35'	EL	13.6	
		SNCOTTS3	27.250	--	1.202	32.744	1.40	0.28	1.95	35'	EL	17	0.561	1.54	35'	EL	1.7	0.80	0.28	1.20	35'	EL	17	
		SNAGGRS4	34.925	--	1.111	38.816	1.40	0.28	1.80	35'	EL	17	0.561	1.38	35'	EL	1.7	0.80	0.28	1.11	35'	EL	17	
		SNS5A	35.550	--	1.079	38.354	1.40	0.28	1.75	35'	EL	17	0.561	1.46	35'	EL	1.7	0.80	0.28	1.08	35'	EL	17	
		SNS6A	39.950	--	1.041	41.601	1.40	0.28	1.69	35'	EL	17	0.561	1.37	35'	EL	1.7	0.80	0.28	1.04	35'	EL	17	
		SNS7B	42.000	(3)	1.000	41.734	1.40	0.28	1.61	35'	EL	17	0.561	1.40	35'	EL	1.7	0.80	0.28	**1.00**	35'	EL	**17**	
	TTST	TNAGRIT3	33.000	--	1.286	42.439	1.40	0.28	2.08	35'	EL	17	0.561	1.60	35'	EL	1.7	0.80	0.28	1.29	35'	EL	17	
		TNT4A	33.075	--	1.285	42.512	1.40	0.28	2.08	35'	EL	17	0.561	1.51	35'	EL	1.7	0.80	0.28	1.29	35'	EL	17	
		TNT6A	41.600	--	1.126	46.840	1.40	0.28	1.82	35'	EL	17	0.561	1.48	35'	EL	1.7	0.80	0.28	1.13	35'	EL	17	
		TNT7A	42.000	--	1.163	48.833	1.40	0.28	1.89	35'	EL	17	0.561	1.37	35'	EL	1.7	0.80	0.28	1.16	35'	EL	17	
		TNT7B	42.000	--	1.144	48.061	1.40	0.28	1.85	35'	EL	17	0.561	1.33	35'	EL	1.7	0.80	0.28	1.14	35'	EL	17	
		TNAGRIT4	43.000	--	1.158	49.810	1.40	0.28	1.86	35'	EL	13.6	0.561	1.28	35'	EL	1.7	0.80	0.28	1.16	35'	EL	17	
		TNAGT5A	45.000	--	1.068	48.071	1.40	0.28	1.73	35'	EL	17	0.561	1.35	35'	EL	1.7	0.80	0.28	1.07	35'	EL	17	
		TNAGT5B	45.000	--	1.031	46.373	1.40	0.28	1.67	35'	EL	17	0.561	1.21	35'	EL	1.7	0.80	0.28	1.03	35'	EL	17	

LOAD FACTORS:

DESIGN LOAD RATING FACTORS	LIMIT STATE	γ_{DC}	γ_{DW}
	STRENGTH I	1.25	1.50
	SERVICE III	1.00	1.00

NOTES:

MINIMUM RATING FACTORS ARE BASED ON THE STRENGTH I AND SERVICE III LIMIT STATES.

ALLOWABLE STRESSES FOR SERVICE III LIMIT STATE ARE AS REQUIRED FOR DESIGN.

COMMENTS:

1.
2.
3.
4.

(#) CONTROLLING LOAD RATING

(1) DESIGN LOAD RATING (HL-93)

(2) DESIGN LOAD RATING (HS-20)

(3) LEGAL LOAD RATING **

** SEE CHART FOR VEHICLE TYPE

GIRDER LOCATION

I - INTERIOR GIRDER
EL - EXTERIOR LEFT GIRDER
ER - EXTERIOR RIGHT GIRDER

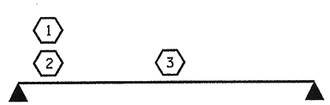

LRFR SUMMARY

FOR SPAN 'A'

PROJECT NO. BD-5104L

NASH COUNTY

STATION: 25+45.00 -L-

STATE OF NORTH CAROLINA
DEPARTMENT OF TRANSPORTATION
RALEIGH

STANDARD
LRFR SUMMARY FOR
35' CORED SLAB UNIT
90° SKEW
(NON-INTERSTATE TRAFFIC)

NORTH CAROLINA PROFESSIONAL SEAL 14045 ENGINEER TIMOTHY K. COGGINS

06/05/13

REVISIONS								SHEET NO.
NO.	BY:	DATE:	NO.	BY:	DATE:			37
1			3					TOTAL SHEETS
2			4					63

ASSEMBLED BY : REZA KOUCHEKI DATE : 5/07/13
CHECKED BY : M.M. AHMED DATE : 5/08/13
DRAWN BY : CVC 6/10
CHECKED BY : DNS 6/10

04-JUN-2013 09:26
S:\DPG1\Tim\Division 4 LIBR\BD-5104L\gkouchekl\BD5104L_PLANS.dgn
tcoggins

STD. NO. 21LRFR1_90S_35L

LOAD AND RESISTANCE FACTOR RATING (LRFR) SUMMARY FOR PRESTRESSED CONCRETE GIRDERS

LEVEL		VEHICLE	WEIGHT (W) (TONS)	CONTROLLING LOAD RATING	MINIMUM RATING FACTORS (RF)	TONS = W X RF	STRENGTH I LIMIT STATE											SERVICE III LIMIT STATE						COMMENT NUMBER
								MOMENT					SHEAR						MOMENT					
							LIVELOAD FACTORS	DISTRIBUTION FACTORS (DF)	RATING FACTOR	SPAN	GIRDER LOCATION	DISTANCE FROM LEFT END OF SPAN (ft)	DISTRIBUTION FACTORS (DF)	RATING FACTOR	SPAN	GIRDER LOCATION	DISTANCE FROM LEFT END OF SPAN (ft)	LIVELOAD FACTORS	DISTRIBUTION FACTORS (DF)	RATING FACTOR	SPAN	GIRDER LOCATION	DISTANCE FROM LEFT END OF SPAN (ft)	
DESIGN LOAD RATING		HL-93(Inv)	N/A	1	1.088	--	1.75	0.277	1.34	45'	EL	22	0.539	1.23	45'	EL	2.2	0.80	0.277	**1.09**	45'	EL	**22**	
		HL-93(Opr)	N/A	--	1.590	--	1.35	0.277	1.74	45'	EL	22	0.539	1.59	45'	EL	2.2	N/A	--	--	--	--	--	
		HS-20(Inv)	36.000	2	1.336	48.104	1.75	0.277	1.65	45'	EL	22	0.539	1.45	45'	EL	2.2	0.80	0.277	**1.34**	45'	EL	**22**	
		HS-20(Opr)	36.000	--	1.882	67.763	1.35	0.277	2.14	45'	EL	22	0.539	1.88	45'	EL	2.2	N/A	--	--	--	--	--	
LEGAL LOAD RATING	SV	SNSH	13.500	--	2.611	35.252	1.40	0.277	4.02	45'	EL	22	0.539	4.01	45'	EL	2.2	0.80	0.277	2.61	45'	EL	22	
		SNGARBS2	20.000	--	2.108	42.166	1.40	0.277	3.25	45'	EL	22	0.539	2.94	45'	EL	2.2	0.80	0.277	2.11	45'	EL	22	
		SNAGRIS2	22.000	--	2.067	45.466	1.40	0.277	3.15	45'	EL	17.6	0.539	2.77	45'	EL	2.2	0.80	0.277	2.07	45'	EL	22	
		SNCOTTS3	27.250	--	1.304	35.527	1.40	0.277	2.01	45'	EL	22	0.539	2.01	45'	EL	2.2	0.80	0.277	1.30	45'	EL	22	
		SNAGGRS4	34.925	--	1.150	40.181	1.40	0.277	1.77	45'	EL	22	0.539	1.74	45'	EL	2.2	0.80	0.277	1.15	45'	EL	22	
		SNS5A	35.550	--	1.121	39.841	1.40	0.277	1.73	45'	EL	22	0.539	1.79	45'	EL	2.2	0.80	0.277	1.12	45'	EL	22	
		SNS6A	39.950	--	1.056	42.175	1.40	0.277	1.63	45'	EL	22	0.539	1.67	45'	EL	2.2	0.80	0.277	1.06	45'	EL	22	
		SNS7B	42.000	3	1.006	42.268	1.40	0.277	1.55	45'	EL	22	0.539	1.68	45'	EL	2.2	0.80	0.277	**1.01**	45'	EL	**22**	
	TTST	TNAGRIT3	33.000	--	1.296	42.759	1.40	0.277	2.00	45'	EL	22	0.539	1.96	45'	EL	2.2	0.80	0.277	1.30	45'	EL	22	
		TNT4A	33.075	--	1.309	43.305	1.40	0.277	2.02	45'	EL	22	0.539	1.88	45'	EL	2.2	0.80	0.277	1.31	45'	EL	22	
		TNT6A	41.600	--	1.099	45.712	1.40	0.277	1.69	45'	EL	22	0.539	1.83	45'	EL	2.2	0.80	0.277	1.10	45'	EL	22	
		TNT7A	42.000	--	1.120	47.043	1.40	0.277	1.73	45'	EL	22	0.539	1.69	45'	EL	2.2	0.80	0.277	1.12	45'	EL	22	
		TNT7B	42.000	--	1.166	48.975	1.40	0.277	1.8	45'	EL	22	0.539	1.61	45'	EL	2.2	0.80	0.277	1.17	45'	EL	22	
		TNAGRIT4	43.000	--	1.111	47.757	1.40	0.277	1.71	45'	EL	22	0.539	1.55	45'	EL	2.2	0.80	0.277	1.11	45'	EL	22	
		TNAGT5A	45.000	--	1.033	46.505	1.40	0.277	1.59	45'	EL	22	0.539	1.59	45'	EL	2.2	0.80	0.277	1.03	45'	EL	22	
		TNAGT5B	45.000	--	1.009	45.408	1.40	0.277	1.56	45'	EL	22	0.539	1.47	45'	EL	2.2	0.80	0.277	1.01	45'	EL	22	

LOAD FACTORS:

DESIGN LOAD RATING FACTORS	LIMIT STATE	γ_{DC}	γ_{DW}
	STRENGTH I	1.25	1.50
	SERVICE III	1.00	1.00

NOTES:

MINIMUM RATING FACTORS ARE BASED ON THE STRENGTH I AND SERVICE III LIMIT STATES.

ALLOWABLE STRESSES FOR SERVICE III LIMIT STATE ARE AS REQUIRED FOR DESIGN.

COMMENTS:

1.
2.
3.
4.

(#) CONTROLLING LOAD RATING

(1) DESIGN LOAD RATING (HL-93)
(2) DESIGN LOAD RATING (HS-20)
(3) LEGAL LOAD RATING **

** SEE CHART FOR VEHICLE TYPE

GIRDER LOCATION

I - INTERIOR GIRDER
EL - EXTERIOR LEFT GIRDER
ER - EXTERIOR RIGHT GIRDER

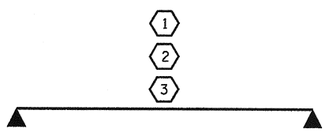

LRFR SUMMARY

FOR SPAN 'B'

PROJECT NO. BD-5104L

NASH COUNTY

STATION: 25+45.00 -L-

STATE OF NORTH CAROLINA
DEPARTMENT OF TRANSPORTATION
RALEIGH

STANDARD
LRFR SUMMARY FOR
45' CORED SLAB UNIT
90° SKEW
(NON-INTERSTATE TRAFFIC)

NORTH CAROLINA PROFESSIONAL SEAL 14045 ENGINEER TIMOTHY K. COGGINS
06/05/13

REVISIONS						SHEET NO.
NO.	BY:	DATE:	NO.	BY:	DATE:	38
1			3			TOTAL SHEETS
2			4			63

ASSEMBLED BY : REZA KOUCHEKI DATE : 5/07/13
CHECKED BY : M.M.AHMED DATE : 5/08/13
DRAWN BY : CVC 6/10
CHECKED BY : DNS 6/10

04-JUN-2013 09:25
S:\DPGI\Tim\Division 4 LIBR\BD-5104L\gkouchekI\BD5104L_PLANS.dgn
tcoggins

STD. NO. 21LRFR1_90S_45L

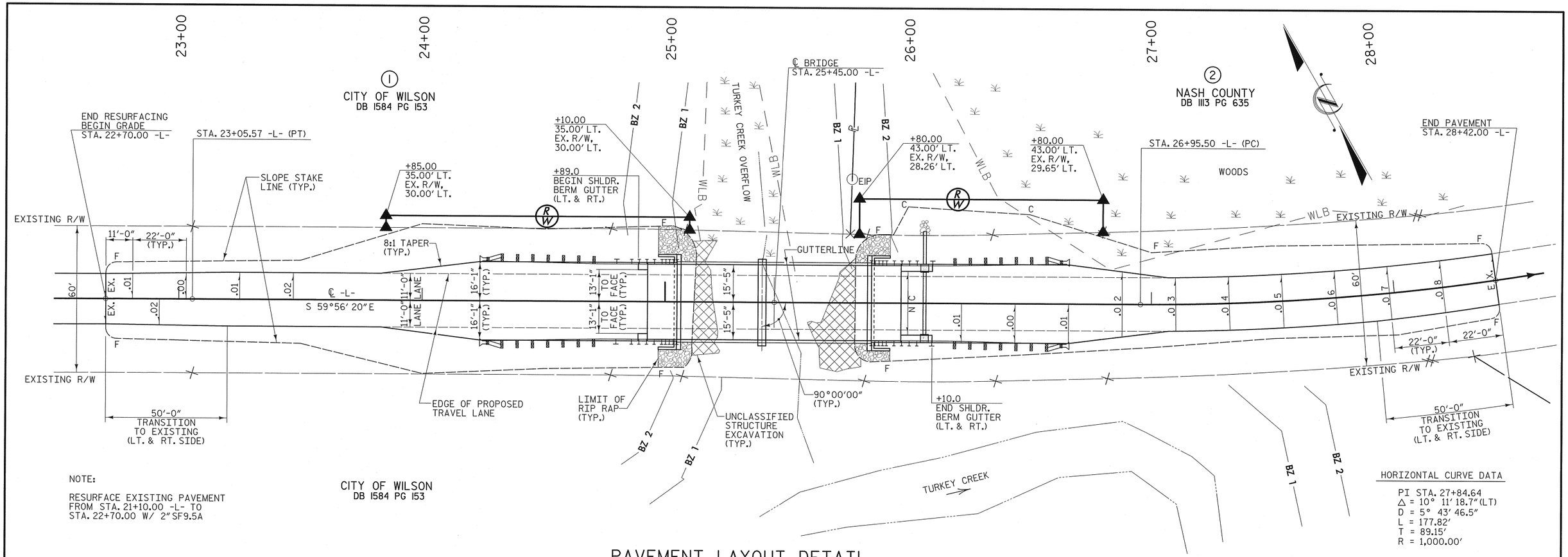

NOTE:

RESURFACE EXISTING PAVEMENT
FROM STA. 21+10.00 -L- TO
STA. 22+70.00 W/ 2" SF9.5A

CITY OF WILSON
DB 1584 PG 153

PAVEMENT LAYOUT DETAIL

SCALE: 1" = 20'

HORIZONTAL CURVE DATA

PI STA. 27+84.64
Δ = 10° 11' 18.7" (LT)
D = 5° 43' 46.5"
L = 177.82'
T = 89.15'
R = 1,000.00'

RIGHT OF WAY AREA DATA

PARCEL NO.	PROPERTY OWNERS NAMES	TOTAL AREA	AREA TAKEN	AREA REMAINING RT.	AREA REMAINING LT.	CONST. EASE.	PERM. DRAIN. EASE.	TEMP. DRAIN. EASE.
1	CITY OF WILSON	539.21 AC	625 SF					
2	NASH COUNTY	20.68 AC	1452 SF		20.65 AC			

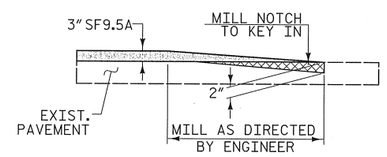

MILLING DETAIL

MILL EXISTING PAVEMENT AT THE FOLLOWING LOCATIONS
-L- STA. 27+38+/- TO STA. 28+42.00

DATUM DESCRIPTION

THE COORDINATE SYSTEM DEVELOPED FOR THIS PROJECT IS BASED ON THE STATE PLANE COORDINATES ESTABLISHED BY NCDOT FOR MONUMENT "GPS 630059-2"
WITH NAD 1983/2007 STATE PLANE GRID COORDINATES OF
NORTHING: 748532.9780(ft) EASTING: 2243317.0860(ft)
ELEVATION: 177.64(ft)
GROUND DISTANCES IN FIELD WERE USED TO DETERMINE COORDINATES FOR "GPS 630059-1" AND "GPS 630059-3"
LOCALIZED HORIZONTAL GROUND DISTANCE FROM "GPS 630059-2" TO -L- STATION 22+70.00 IS
S 71° 30' 30.0" E 635.12'
VERTICAL DATUM USED IS NAVD 88

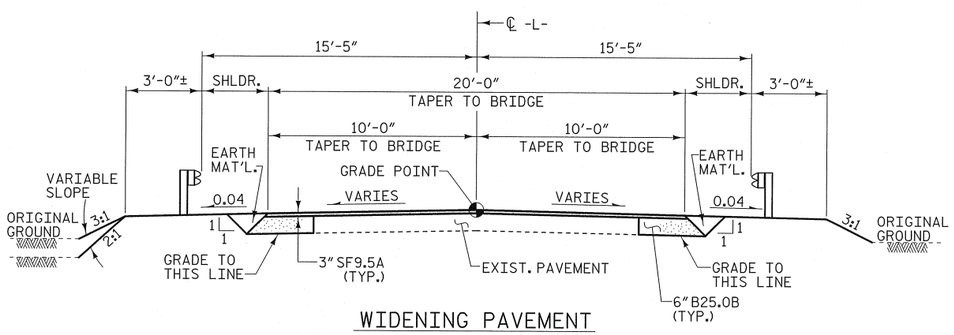

WIDENING PAVEMENT

FROM -L- STA. 22+70.00 TO -L- STA. 24+25
FROM -L- STA. 26+25 TO -L- STA. 28+42.00

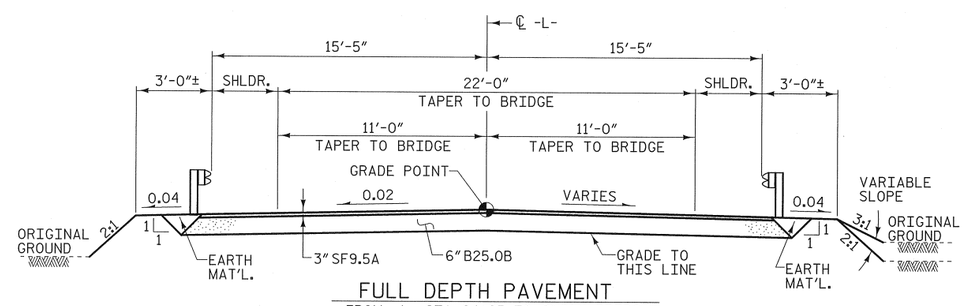

FULL DEPTH PAVEMENT

FROM -L- STA. 24+25 TO BEGIN BRIDGE
FROM END BRIDGE TO -L- STA. 26+25

TYPICAL ROADWAY SECTION

WITHIN CONSTRUCTION LIMITS

PROJECT NO. BD-5104L
NASH COUNTY
STATION: 25+45.00 -L-

REPLACES BRIDGE NO. 60

STATE OF NORTH CAROLINA
DEPARTMENT OF TRANSPORTATION
RALEIGH

ROADWAY DETAILS

30'-10" CLEAR ROADWAY - 90° SKEW

NORTH CAROLINA PROFESSIONAL SEAL 19661 ENGINEER L. KEVIN AUSTIN 7/2/13

PLANS PREPARED BY:
MULKEY ENGINEERS & CONSULTANTS
PO Box 33127
RALEIGH, N.C. 27636
(919) 851-1912
(919) 851-1918 (FAX)
WWW.MULKEYINC.COM
NC LICENSE NO. C-1021

REVISIONS						SHEET NO.
NO.	BY:	DATE:	NO.	BY:	DATE:	39
1			3			TOTAL SHEETS
2			4			63

DRAWN BY : W. B. ALLEN DATE : 3/13
CHECKED BY : L. K. AUSTIN DATE : 4/13

7/2/2013 1:30:53 PM R:\Structures\BD5104L_SD_02_03.dgn

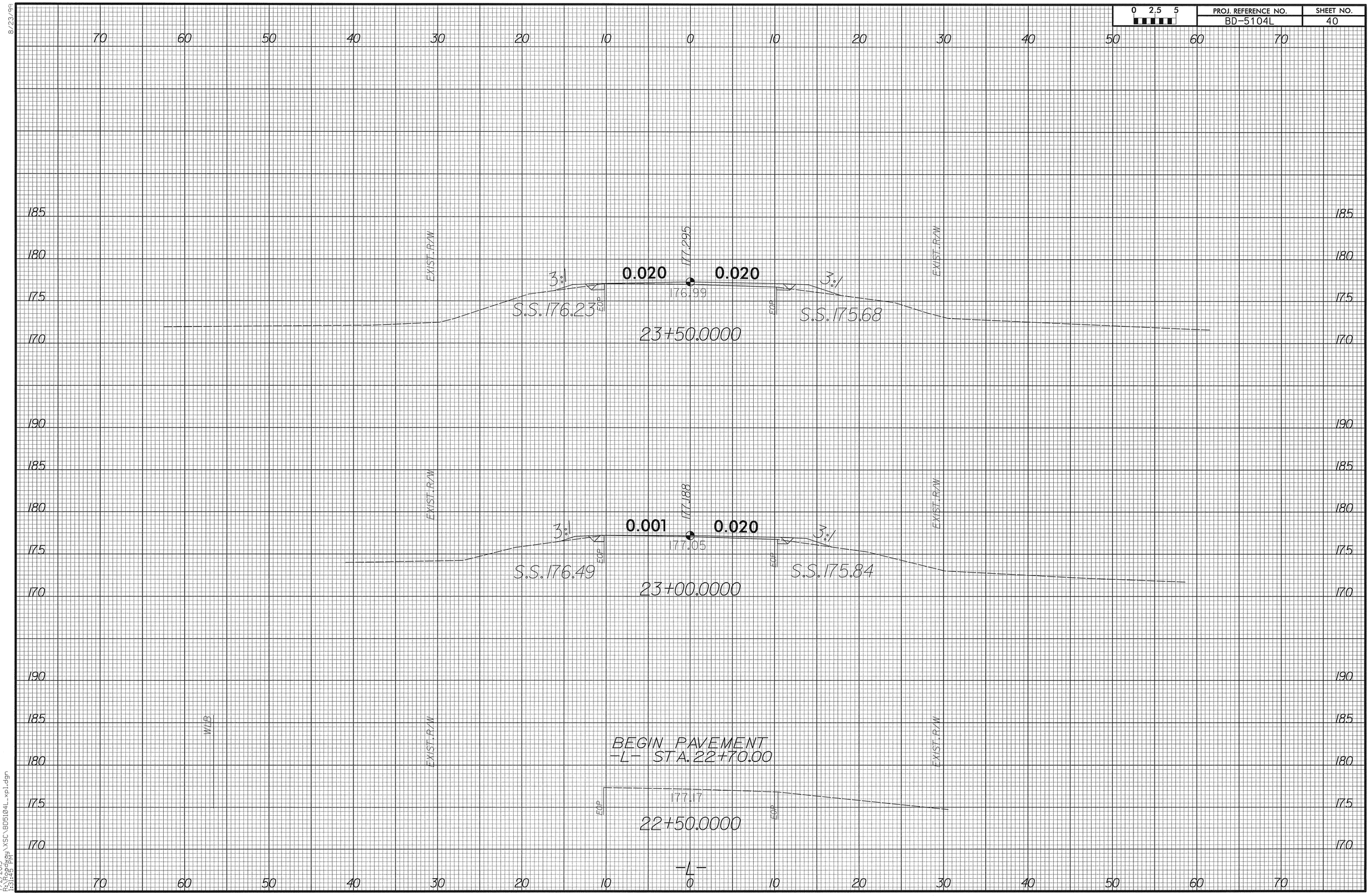

8/23/99

7/2/2013
R:\Roadway\XSC\BD5104L_xpl.dgn
1:31:45 PM

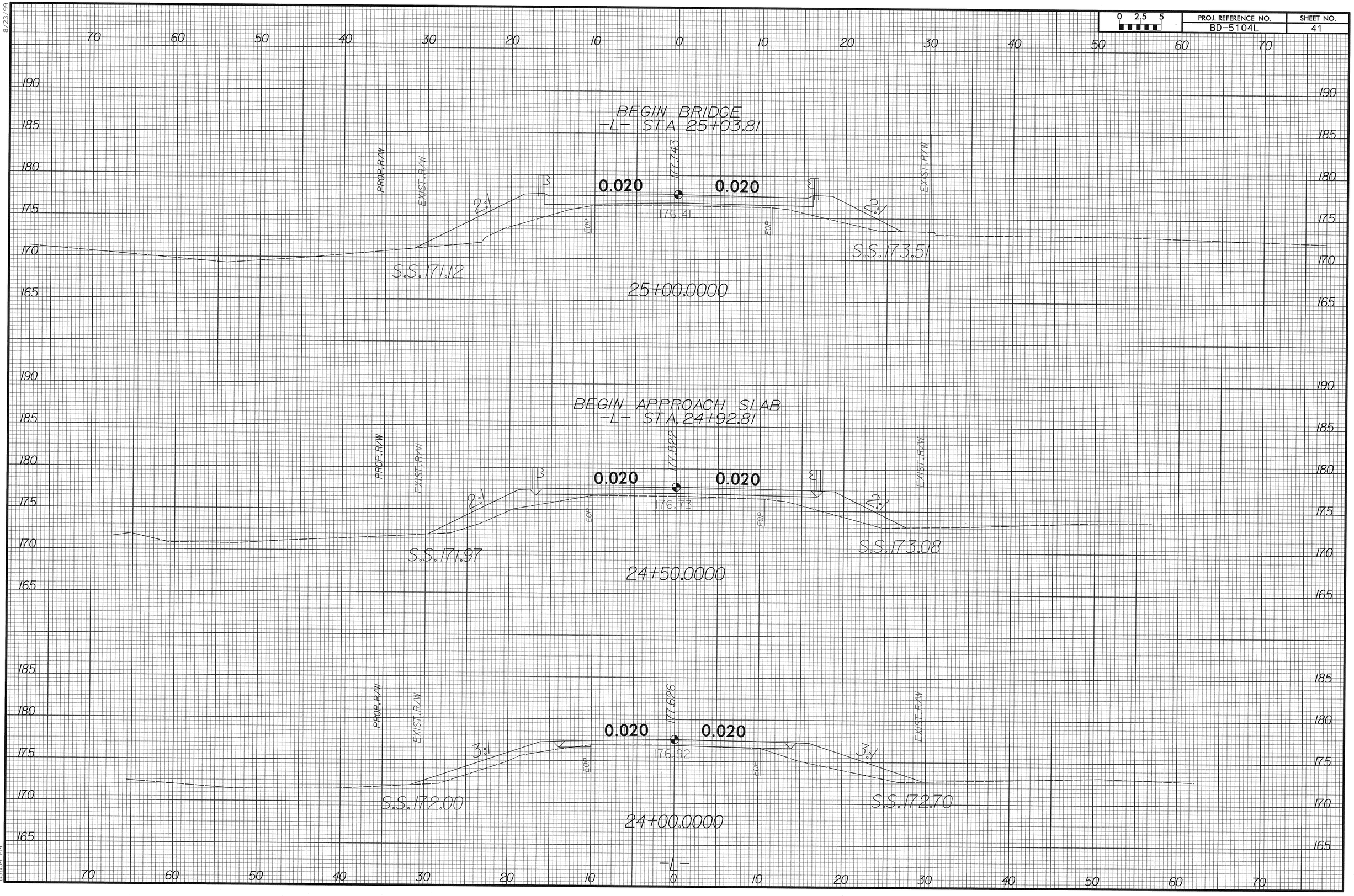
BEGIN BRIDGE
-L- STA 25+03.81
177.743
0.020
0.020
176.41
2:1
2:1
PROP. R/W
EXIST. R/W
EOP
EOP
S.S. 171.12
S.S. 173.51
25+00.0000
BEGIN APPROACH SLAB
-L- STA 24+92.81
177.822
0.020
0.020
176.73
2:1
2:1
S.S. 171.97
S.S. 173.08
24+50.0000
177.626
0.020
0.020
176.92
3:1
3:1
S.S. 172.00
S.S. 172.70
24+00.0000
-L-
70 60 50 40 30 20 10 0 10 20 30 40 50 60 70
190 185 180 175 170 165

0 2.5 5	PROJ. REFERENCE NO.	SHEET NO.
	BD-5104L	42

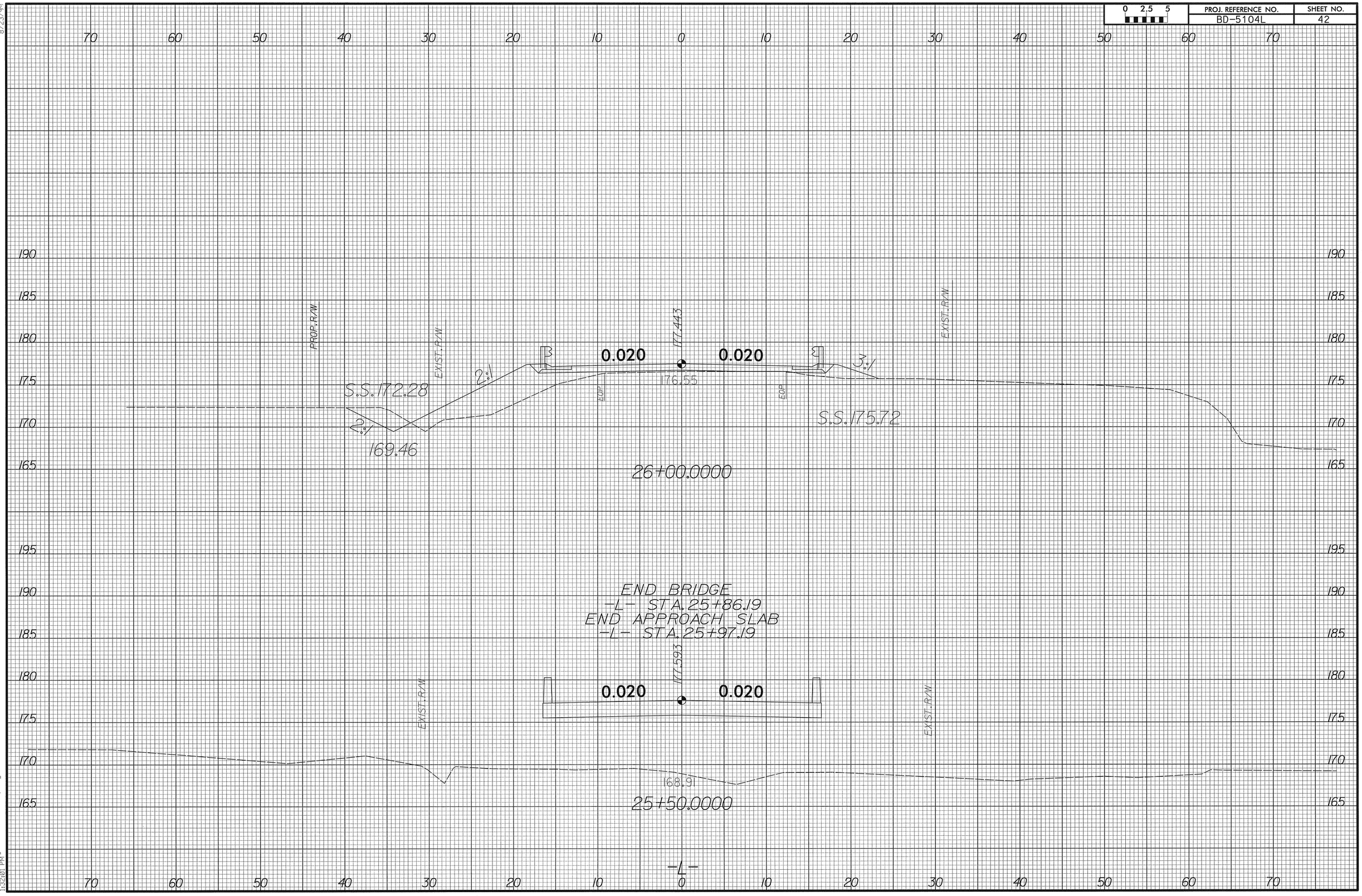

8/23/99

7/2/2013
R:\Roadway\XSC\BD5104L_xpl.dgn
12:20 PM

0 2.5 5	PROJ. REFERENCE NO.	SHEET NO.
	BD-5104L	43

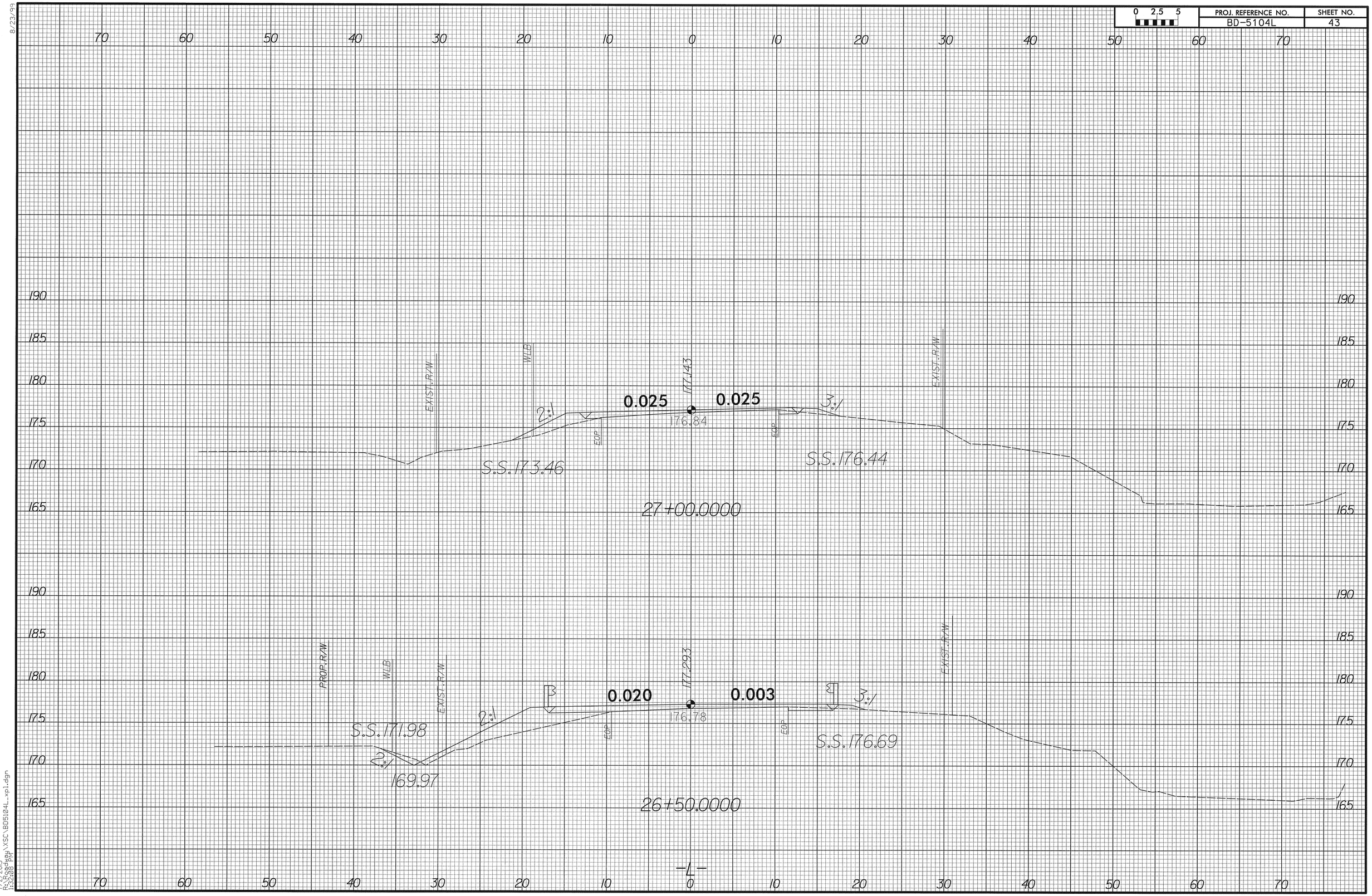

8/23/99

7/2/2013
R:/2013Projects\VSC\BD5104L_xpl.dgn
11:32:08 AM

0 2.5 5	PROJ. REFERENCE NO.	SHEET NO.
	BD-5104L	44

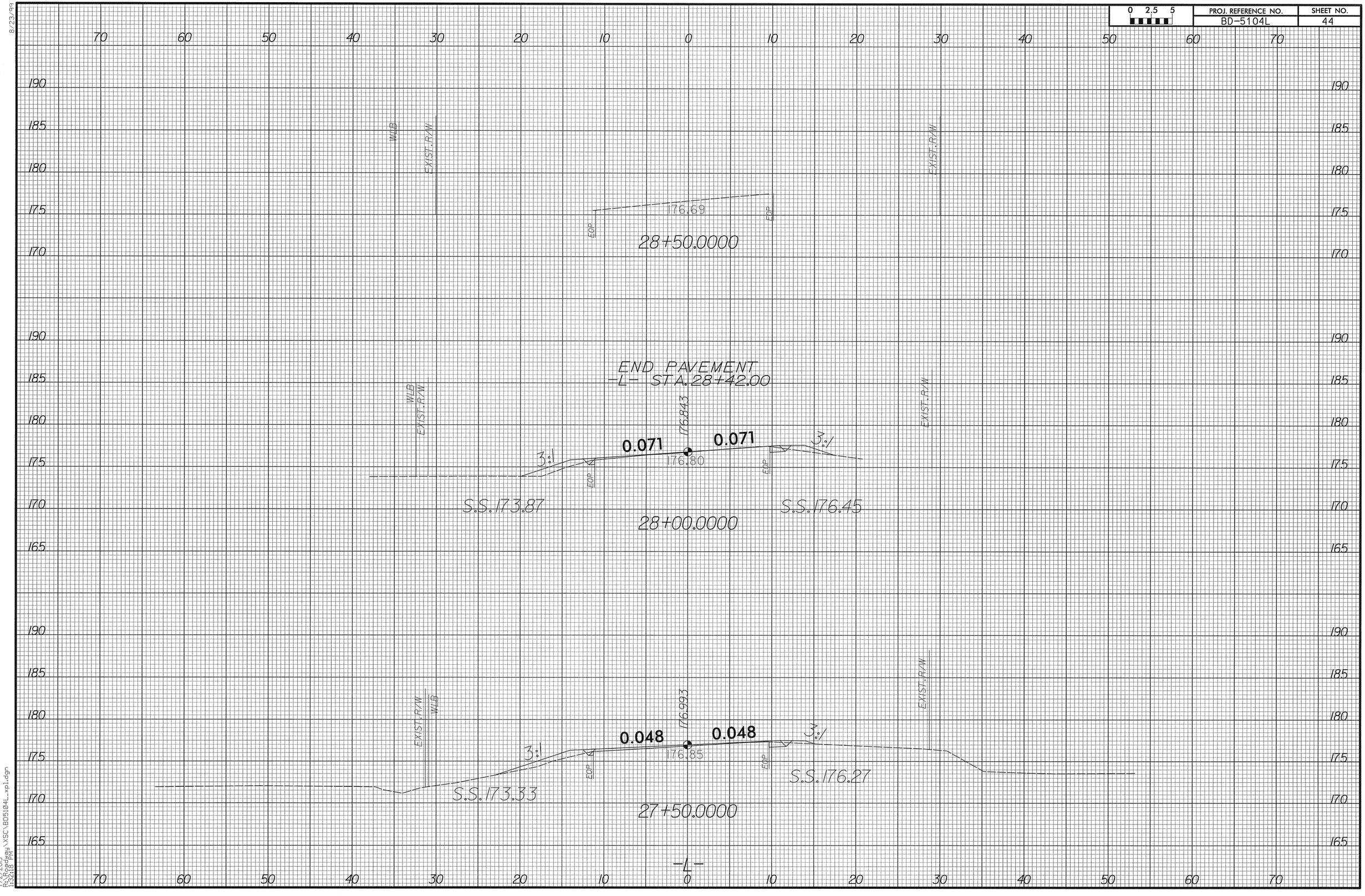

8/23/99

7/2/2013
11:26:13 AM
R:\Roadway\XSC\BD5104L_xpl.dgn

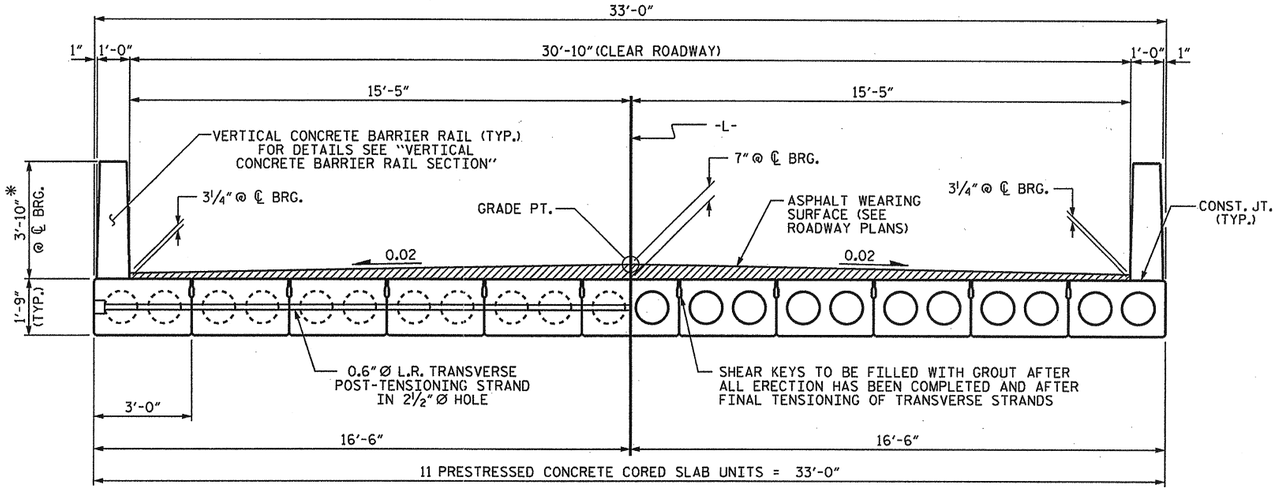

HALF SECTION
AT INTERMEDIATE DIAPHRAGMS

HALF SECTION
THROUGH VOIDS

TYPICAL SECTION

* - THE MAXIMUM BARRIER RAIL HEIGHT AND ASPHALT THICKNESS IS SHOWN. THE HEIGHT OF THE BARRIER RAIL AND ASPHALT THICKNESS VARIES WHILE THE TOP OF THE BARRIER RAIL FOLLOWS THE PROFILE OF THE GUTTERLINE. FOR RAIL HEIGHT DETAILS AND ASPHALT THICKNESS SEE THE "VERTICAL CONCRETE BARRIER RAIL SECTION" DETAIL.

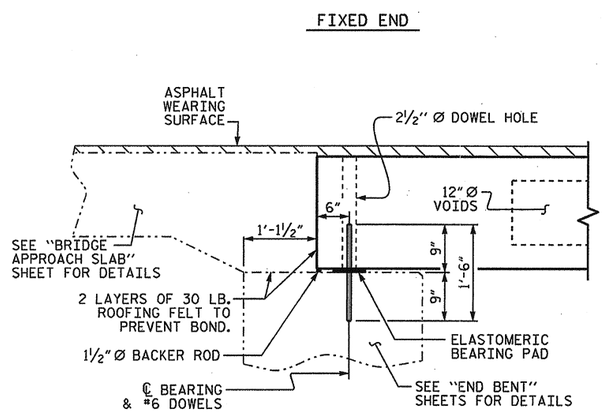

SECTION AT END BENT

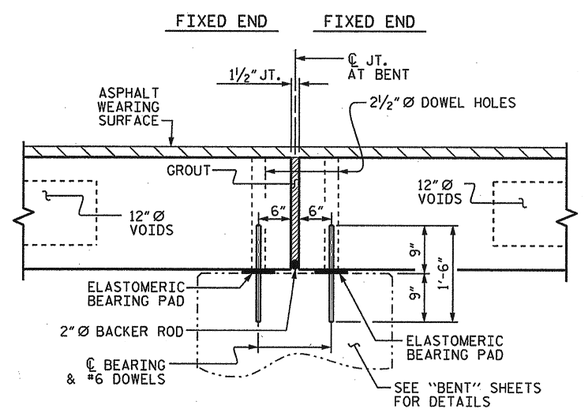

SECTION AT BENT

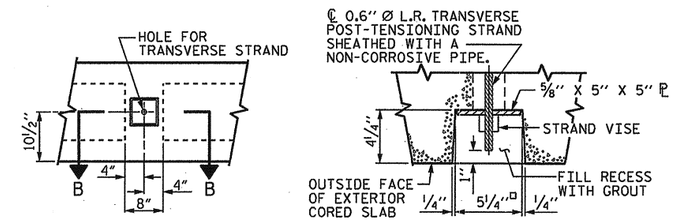

ELEVATION VIEW

SECTION B-B

GROUTED RECESS AT END OF POST-TENSIONED STRAND OF CORED SLABS

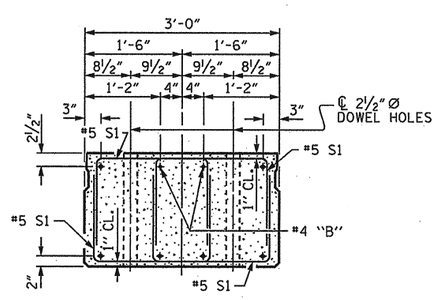

END ELEVATION

SHOWING PLACEMENT OF DOUBLE STIRRUPS AND LOCATION OF DOWEL HOLES. (STRAND LAYOUT NOT SHOWN.) INTERIOR SLAB UNIT SHOWN-EXTERIOR SLAB UNIT SIMILAR EXCEPT SHEAR KEY LOCATION.

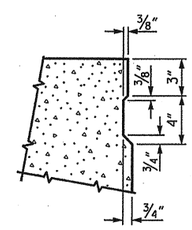

SHEAR KEY DETAIL

NOTE: OMIT SHEAR KEY ON OUTSIDE FACE OF EXTERIOR CORED SLABS.

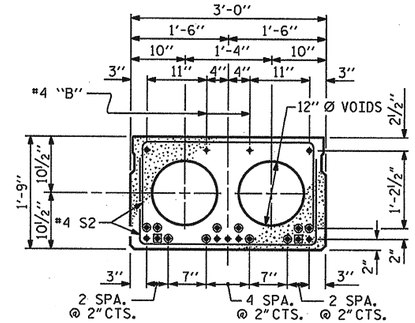

INTERIOR SLAB SECTION
(35' UNIT)
(9 STRANDS REQUIRED)

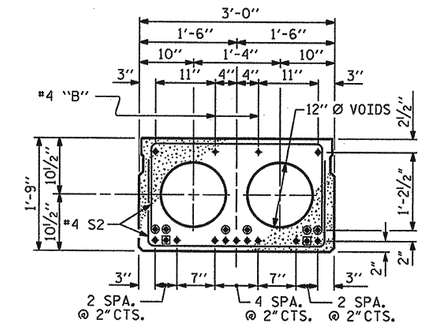

INTERIOR SLAB SECTION
(45' UNIT)
(13 STRANDS REQUIRED)

0.6" Ø LOW RELAXATION STRAND LAYOUT

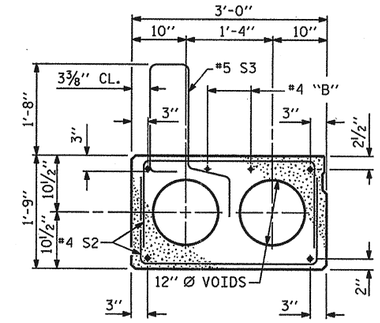

EXT. SLAB SECTION

(FOR PRESTRESSED STRAND LAYOUT, SEE INTERIOR SLAB SECTION.)

◉ BOND SHALL BE BROKEN ON THESE STRANDS FOR A DISTANCE OF 2'-0" FROM END OF CORED SLAB UNIT. SEE STANDARD SPECIFICATIONS, ARTICLE 1078-7.

◉ OPTIONAL FULL LENGTH DEBONDED STRANDS. THESE STRANDS ARE NOT REQUIRED. IF THE FABRICATOR CHOOSES TO INCLUDE THESE STRANDS IN THE CORED SLAB UNIT, THE STRANDS SHALL BE DEBONDED FOR THE FULL LENGTH OF THE UNIT AT NO ADDITIONAL COST. SEE STANDARD SPECIFICATIONS, ARTICLE 1078-7.

DEBONDING LEGEND

PROJECT NO. BD-5104L
NASH COUNTY
STATION: 25+45.00 -L-

SHEET 1 OF 4

STATE OF NORTH CAROLINA
DEPARTMENT OF TRANSPORTATION
RALEIGH

STANDARD
3'-0" X 1'-9"
PRESTRESSED CONCRETE
CORED SLAB UNIT
90° SKEW

NORTH CAROLINA PROFESSIONAL SEAL 14045 ENGINEER TIMOTHY L. COGGINS
06/05/13

REVISIONS						SHEET NO.
NO.	BY:	DATE:	NO.	BY:	DATE:	45
1			3			TOTAL SHEETS
2			4			63

STD. NO. 21" PCS2_33_90S

ASSEMBLED BY : REZA KOUCHEKI		DATE : 5/07/13	
CHECKED BY : M.M. AHMED		DATE : 5/08/13	
DRAWN BY : DGE	5/09	REV. 12/11	MAA/AAC
CHECKED BY : BCH	6/09		

04-JUN-2013 09:25
S:\DPGI\Tim\Division 4 LIBR\BD-5104L\gkoucheki\BD5104L_PLANS.dgn
tcoggins

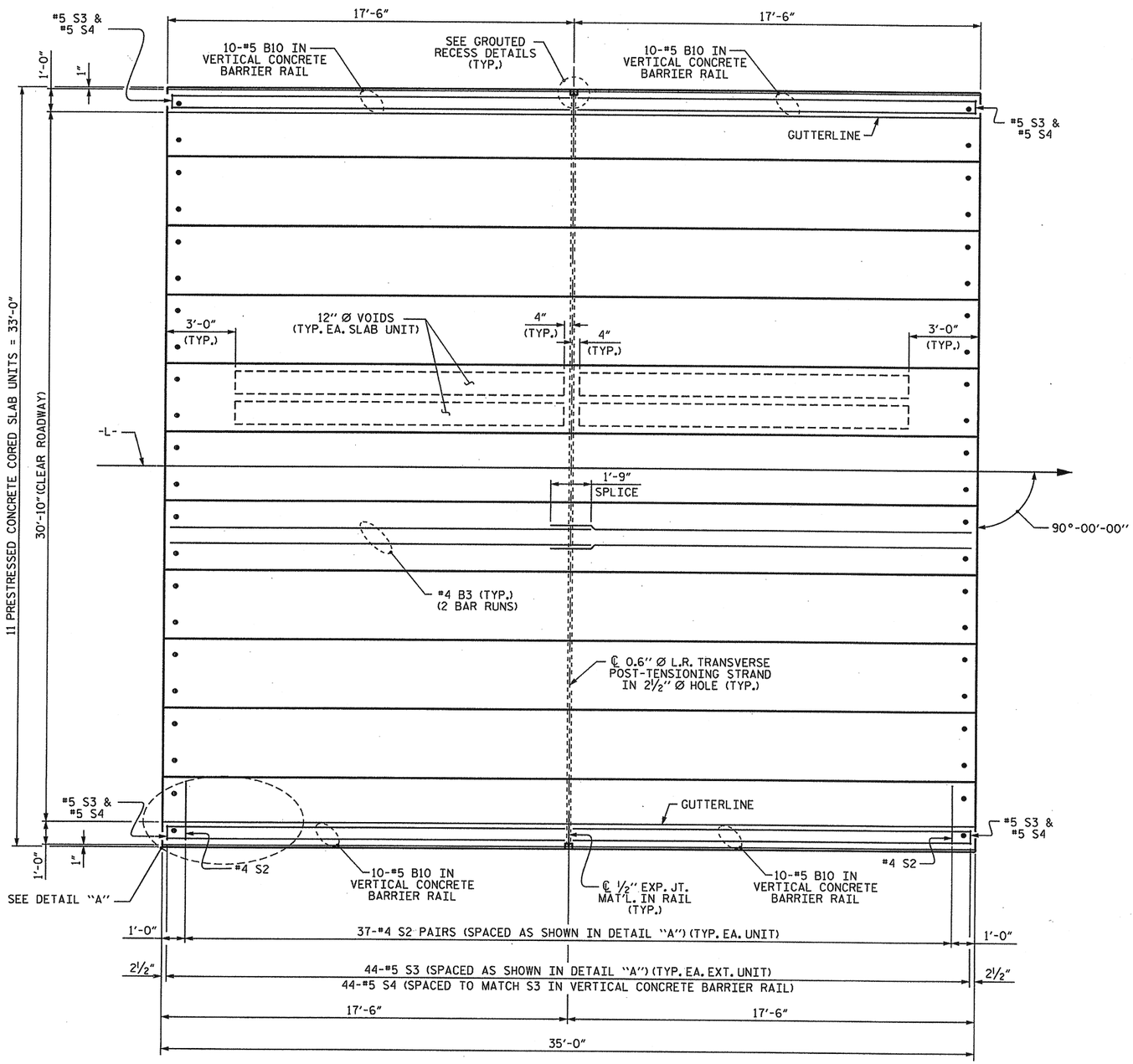

PLAN OF UNIT

NO DECK DRAINS REQUIRED

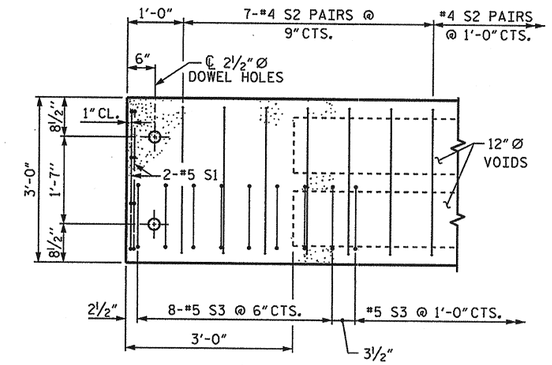

DETAIL "A"

NOTE: EXTERIOR UNIT SHOWN - INTERIOR UNIT SIMILAR EXCEPT OMIT #5 S3 BARS.

PROJECT NO. B-5104L

NASH COUNTY

STATION: 25+45.00 -L-

SHEET 2 OF 4

STATE OF NORTH CAROLINA
DEPARTMENT OF TRANSPORTATION
RALEIGH

PLAN OF 35' UNIT 30'-10" CLEAR ROADWAY 90° SKEW

NORTH CAROLINA PROFESSIONAL SEAL 14045 ENGINEER TIMOTHY L. COGGINS
06/05/13

REVISIONS						SHEET NO.
NO.	BY:	DATE:	NO.	BY:	DATE:	46
1			3			TOTAL SHEETS
2			4			63

ASSEMBLED BY : REZA KOUCHEKI		DATE : 5/07/13	
CHECKED BY : M.M. AHMED		DATE : 5/08/13	
DRAWN BY : DGE	3/09	REV. 12/5/11	MAA/AAC
CHECKED BY : BCH	3/09		

04-JUN-2013 09:24
S:\DPGI\Tim\Division 4 LIBR\BD-5104L\gkoucheki\BD5104L_PLANS.dgn
tcoggins

STD. NO. 21" PCS_33_90S_35L

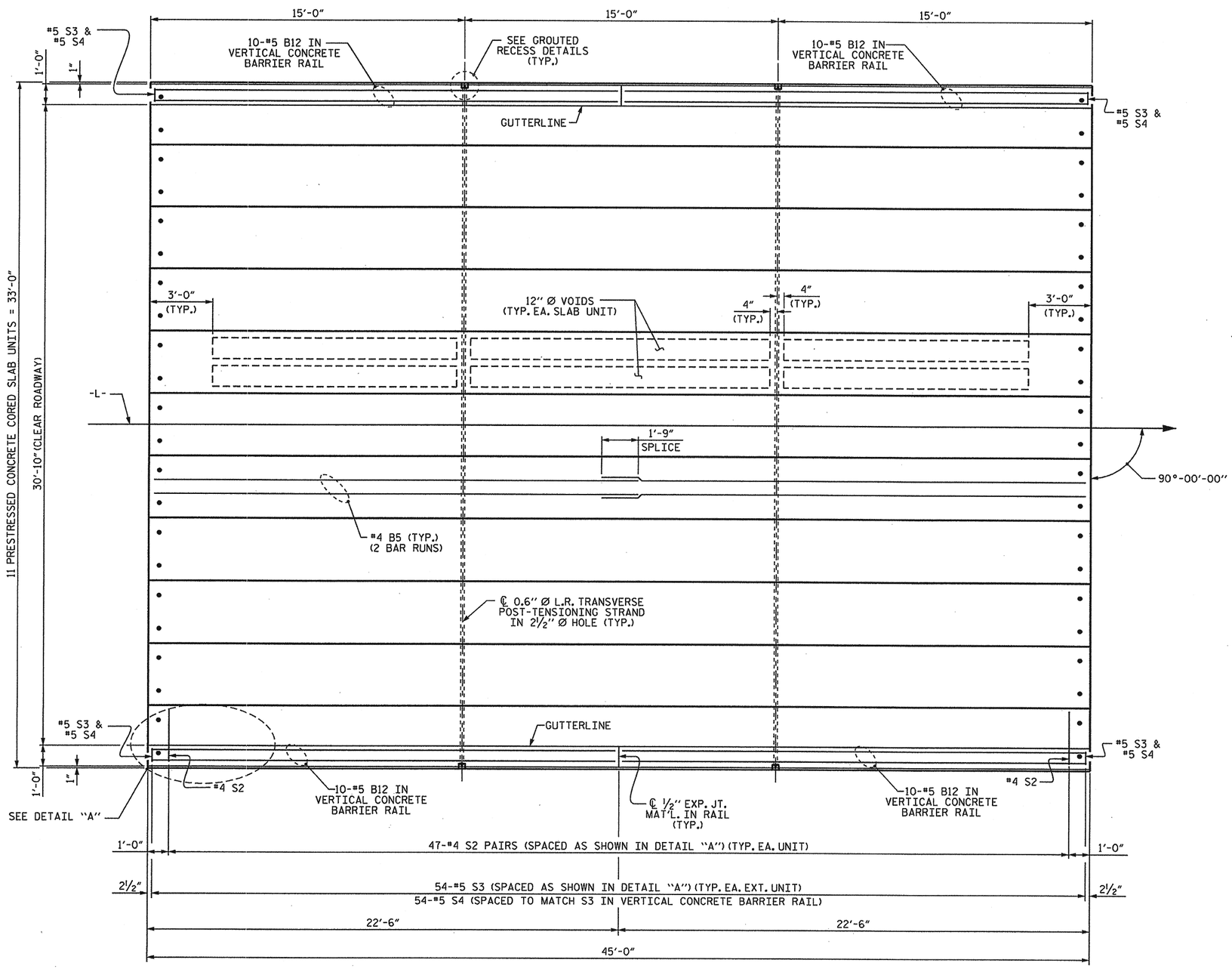

PLAN OF UNIT

NO DECK DRAINS REQUIRED

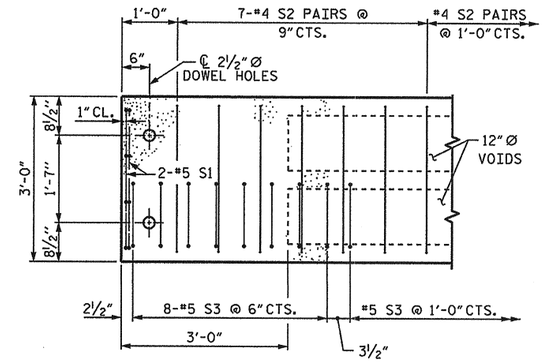

DETAIL "A"

NOTE: EXTERIOR UNIT SHOWN - INTERIOR UNIT SIMILAR EXCEPT OMIT #5 S3 BARS.

ASSEMBLED BY : REZA KOUCHEKI	DATE : 5/07/13		
CHECKED BY : M.M. AHMED	DATE : 5/08/13		
DRAWN BY : DGE	3/09	REV. 12/5/11	MAA/AAC
CHECKED BY : BCH	3/09		

04-JUN-2013 09:24
S:\DPGI\Tfm\Division 4 LIBR\BD-5104L\gkoucheki\BD5104L_PLANS.dgn
tcoggins

NORTH CAROLINA PROFESSIONAL SEAL 14045 ENGINEER TIMOTHY W. COGGINS
06/05/13

PROJECT NO. BD-5104L
NASH COUNTY
STATION: 25+45.00 -L-

SHEET 3 OF 4

STATE OF NORTH CAROLINA
DEPARTMENT OF TRANSPORTATION
RALEIGH

PLAN OF 45' UNIT 30'-10" CLEAR ROADWAY 90° SKEW

REVISIONS							SHEET NO.
NO.	BY:	DATE:	NO.	BY:	DATE:		47
1			3				TOTAL SHEETS
2			4				63

STD. NO. 21" PCS_33_90S_45L

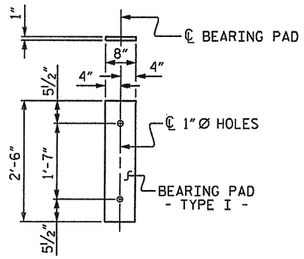

FIXED END
(TYPE I - 44 REQ'D)

ELASTOMERIC BEARING DETAILS

ELASTOMER IN ALL BEARINGS SHALL BE 50 DUROMETER HARDNESS.

CORED SLABS REQUIRED

	NUMBER	LENGTH	TOTAL LENGTH
35' UNIT			
EXTERIOR C.S.	2	35'-0"	70'-0"
INTERIOR C.S.	9	35'-0"	315'-0"
TOTAL	11	35'-0"	385'-0"

CORED SLABS REQUIRED

	NUMBER	LENGTH	TOTAL LENGTH
45' UNIT			
EXTERIOR C.S.	2	45'-0"	90'-0"
INTERIOR C.S.	9	45'-0"	405'-0"
TOTAL	11	45'-0"	495'-0"

BILL OF MATERIAL FOR ONE 35' CORED SLAB UNIT

				EXTERIOR UNIT		INTERIOR UNIT	
BAR	NUMBER	SIZE	TYPE	LENGTH	WEIGHT	LENGTH	WEIGHT
B3	4	#4	STR	18'-3"	49	18'-3"	49
S1	8	#5	3	4'-3"	35	4'-3"	35
S2	74	#4	3	5'-4"	264	5'-4"	264
✻ S3	44	#5	1	6'-2"	283		
REINFORCING STEEL			LBS.		348		348
✻ EPOXY COATED REINFORCING STEEL			LBS.		283		
5000 P.S.I. CONCRETE			CU. YDS.		5.1		5.1
0.6"Ø L.R. STRANDS			No.		9		9

BILL OF MATERIAL FOR ONE 45' CORED SLAB UNIT

				EXTERIOR UNIT		INTERIOR UNIT	
BAR	NUMBER	SIZE	TYPE	LENGTH	WEIGHT	LENGTH	WEIGHT
B5	4	#4	STR	23'-3"	62	23'-3"	62
S1	8	#5	3	4'-3"	35	4'-3"	35
S2	94	#4	3	5'-4"	335	5'-4"	335
✻ S3	54	#5	1	6'-2"	347		
REINFORCING STEEL			LBS.		432		432
✻ EPOXY COATED REINFORCING STEEL			LBS.		347		
6500 P.S.I. CONCRETE			CU. YDS.		6.5		6.5
0.6"Ø L.R. STRANDS			No.		13		13

BAR TYPES

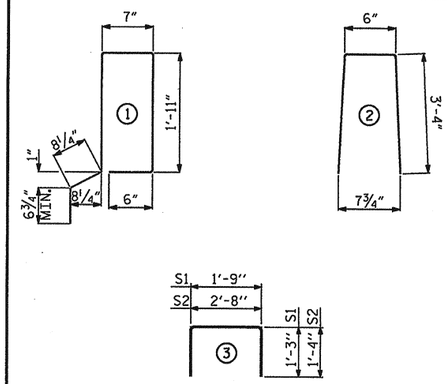

ALL BAR DIMENSIONS ARE OUT TO OUT

BILL OF MATERIAL FOR VERTICAL CONCRETE BARRIER RAIL

BAR	BARS PER PAIR OF EXTERIOR UNITS	TOTAL NO.	SIZE	TYPE	LENGTH	WEIGHT
	35' UNIT					
✻B10	40	40	#5	STR	17'-1"	713
✻ S4	88	88	#5	2	7'-2"	658
✻ EPOXY COATED REINFORCING STEEL				LBS.		1371
CLASS AA CONCRETE				CU.YDS.		9.2
TOTAL VERTICAL CONCRETE BARRIER RAIL				LN. FT.		70.13

BILL OF MATERIAL FOR VERTICAL CONCRETE BARRIER RAIL

BAR	BARS PER PAIR OF EXTERIOR UNITS	TOTAL NO.	SIZE	TYPE	LENGTH	WEIGHT
	45' UNIT					
✻B12	40	40	#5	STR	22'-1"	921
✻ S4	108	108	#5	2	7'-2"	807
✻ EPOXY COATED REINFORCING STEEL				LBS.		1728
CLASS AA CONCRETE				CU.YDS.		11.8
TOTAL VERTICAL CONCRETE BARRIER RAIL				LN. FT.		90.12

GUTTERLINE ASPHALT THICKNESS & RAIL HEIGHT

30'-10" CLEAR ROADWAY	ASPHALT OVERLAY THICKNESS	RAIL HEIGHT
	@ MID-SPAN	@ MID-SPAN
	NORMAL CROWN SECTION	
35' UNITS	2⅞"	3'-9⅝"
45' UNITS	2⅛"	3'-8⅞"

NOTES

ALL PRESTRESSING STRANDS SHALL BE 7-WIRE LOW RELAXATION GRADE 270 STRANDS AND SHALL CONFORM TO AASHTO M203 EXCEPT FOR SAMPLING REQUIREMENTS WHICH SHALL BE IN ACCORDANCE WITH THE STANDARD SPECIFICATIONS.

ALL REINFORCING STEEL CAST WITH THE CORED SLAB SECTIONS SHALL BE GRADE 60 AND SHALL BE INCLUDED IN THE UNIT PRICE BID FOR PRESTRESSED CONCRETE CORED SLABS.

RECESSES FOR TRANSVERSE STRANDS SHALL BE GROUTED AFTER THE TENSIONING OF THE STRANDS.

THE 2½"Ø DOWEL HOLES AT FIXED ENDS OF SLAB SECTIONS SHALL BE FILLED WITH NON-SHRINK GROUT.

THE BACKER RODS SHALL CONFORM TO THE REQUIREMENTS OF TYPE M BOND BREAKER. SEE SECTION 1028 OF THE STANDARD SPECIFICATIONS.

WHEN CORED SLABS ARE CAST, AN INTERNAL HOLD-DOWN SYSTEM SHALL BE EMPLOYED TO PREVENT VOIDS FROM RISING OR MOVING SIDEWAYS. AT LEAST SIX WEEKS PRIOR TO CASTING CORED SLABS, THE CONTRACTOR SHALL SUBMIT TO THE ENGINEER FOR REVIEW AND COMMENT, DETAILED DRAWINGS OF THE PROPOSED HOLD-DOWN SYSTEM. IN ADDITION TO STRUCTURAL DETAILS, LOCATION AND SPACING OF THE HOLD-DOWNS SHALL BE INDICATED.

ALL REINFORCING STEEL IN THE VERTICAL CONCRETE BARRIER RAIL SHALL BE EPOXY COATED.

PRESTRESSING STRANDS SHALL BE CUT FLUSH WITH THE CORED SLAB UNIT ENDS.

APPLY EPOXY PROTECTIVE COATING TO CORED SLAB UNIT ENDS.

GROOVED CONTRACTION JOINTS, ½" IN DEPTH, SHALL BE TOOLED IN ALL EXPOSED FACES OF THE BARRIER RAIL AND IN ACCORDANCE WITH ARTICLE 825-10(B) OF THE STANDARD SPECIFICATIONS. A CONTRACTION JOINT SHALL BE LOCATED AT EACH THIRD POINT BETWEEN BARRIER RAIL EXPANSION JOINTS. ONLY ONE CONTRACTION JOINT IS REQUIRED AT MIDPOINT OF BARRIER RAIL SEGMENTS LESS THAN 20 FEET IN LENGTH AND NO CONTRACTION JOINTS ARE REQUIRED FOR THOSE SEGMENTS LESS THAN 10 FEET IN LENGTH.

TRANSVERSE POST TENSIONING OF THE CORED SLAB UNITS SHALL BE DONE IN ACCORDANCE WITH THE STANDARD SPECIFICATIONS.

THE TRANSFER OF LOAD FROM THE ANCHORAGES TO THE CORED SLAB UNIT SHALL BE DONE WHEN THE CONCRETE HAS REACHED A COMPRESSIVE STRENGTH OF NOT LESS THAN THE REQUIRED STRENGTH SHOWN IN THE "CONCRETE RELEASE STRENGTH" TABLE.

FOR GROUT FOR STRUCTURES, SEE SPECIAL PROVISIONS.

DEAD LOAD DEFLECTION AND CAMBER

	3'-0" x 1'-9"
35' CORED SLAB UNIT	0.6"Ø L.R. STRAND
CAMBER (SLAB ALONE IN PLACE)	½" ↑
DEFLECTION DUE TO SUPERIMPOSED DEAD LOAD✻✻	⅛" ↓
FINAL CAMBER	⅜" ↑

✻✻ INCLUDES FUTURE WEARING SURFACE

DEAD LOAD DEFLECTION AND CAMBER

	3'-0" x 1'-9"
45' CORED SLAB UNIT	0.6"Ø L.R. STRAND
CAMBER (SLAB ALONE IN PLACE)	1¼" ↑
DEFLECTION DUE TO SUPERIMPOSED DEAD LOAD✻✻	⅛" ↓
FINAL CAMBER	1⅛" ↑

✻✻ INCLUDES FUTURE WEARING SURFACE

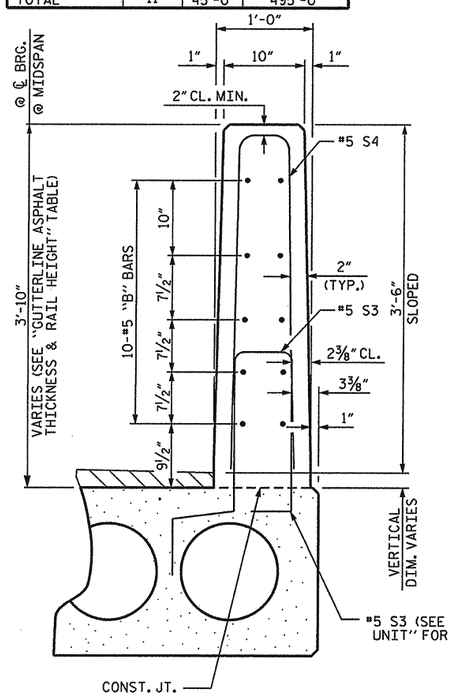

VERTICAL CONCRETE BARRIER RAIL SECTION

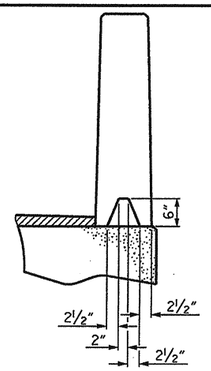

SECTION S-S
AT DAM IN OPEN JOINT
(THIS IS TO BE USED ONLY WHEN SLIP FORM IS USED)

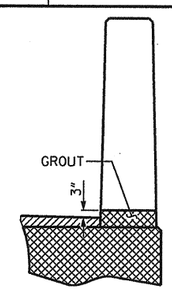

SECTION T-T
AT OPEN JOINT AT BENT
(THIS IS TO BE USED WHERE FOAM JOINT IS NOT USED)

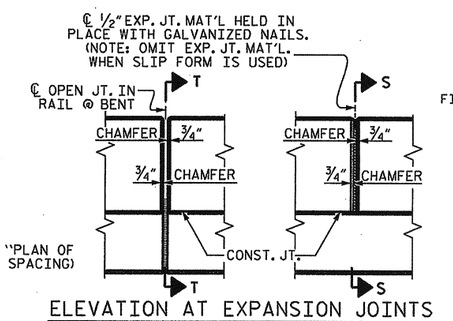

ELEVATION AT EXPANSION JOINTS

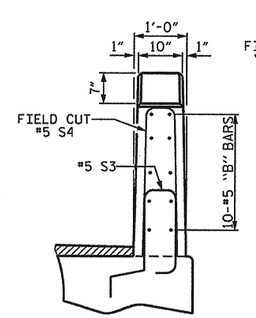

END VIEW

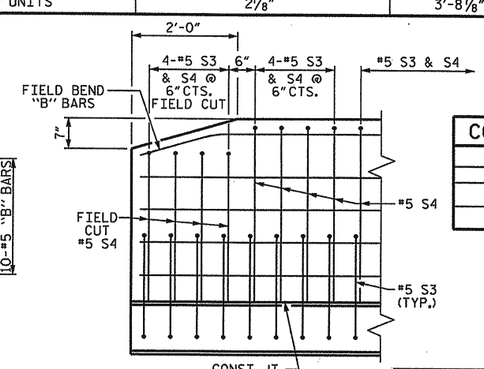

SIDE VIEW

END OF RAIL DETAILS

CONCRETE RELEASE STRENGTH

UNIT	PSI
35' UNITS	4000
45' UNITS	4000

GRADE 270 STRANDS

	0.6"Ø L.R.
AREA (SQUARE INCHES)	0.217
ULTIMATE STRENGTH (LBS. PER STRAND)	58,600
APPLIED PRESTRESS (LBS. PER STRAND)	43,950

NORTH CAROLINA PROFESSIONAL SEAL 14045 ENGINEER TIMOTHY W. COGGINS
06/05/13

PROJECT NO. BD-5104L
NASH COUNTY
STATION: 25+45.00-L-

SHEET 4 OF 4

STATE OF NORTH CAROLINA
DEPARTMENT OF TRANSPORTATION
RALEIGH

STANDARD
3'-0" X 1'-9"
PRESTRESSED CONCRETE CORED SLAB UNIT
90° SKEW

REVISIONS								SHEET NO.
NO.	BY:	DATE:	NO.	BY:	DATE:			48
1			3					TOTAL SHEETS
2			4					63

ASSEMBLED BY : REZA KOUCHEKI DATE : 5/08/13
CHECKED BY : M.M. AHMED DATE : 5/08/13
DRAWN BY : DGE 5/09
CHECKED BY : BCH 6/09
REV. 12/11 MAA/AAC

04-JUN-2013 09:23
S:\DPG1\Tim\Division 4 LIBR\BD-5104L\gkoucheki\BD5104L_PLANS.dgn
tcoggins

STD. NO. 21" PCS3_33_90S

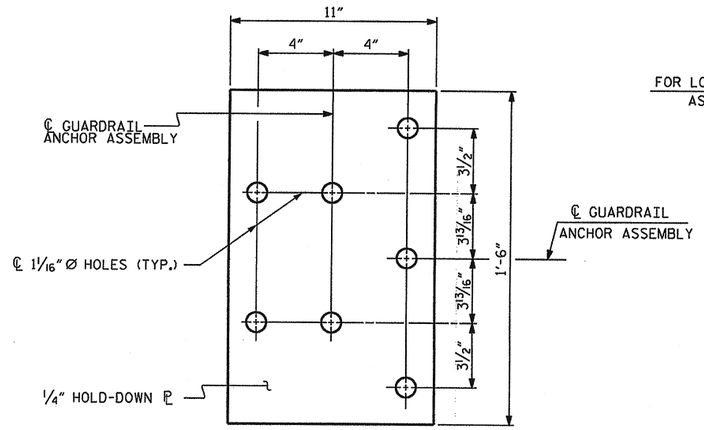

PLAN

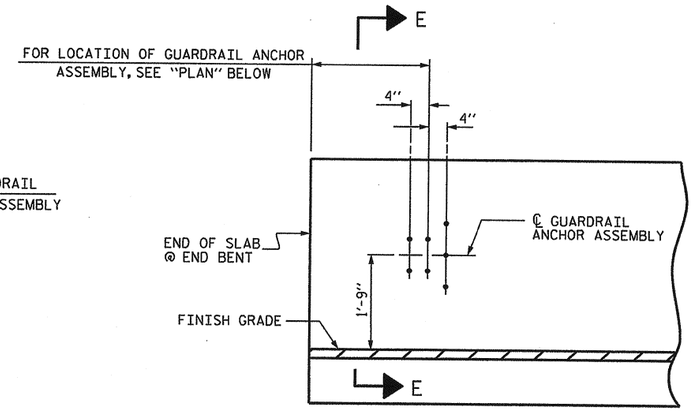

ELEVATION

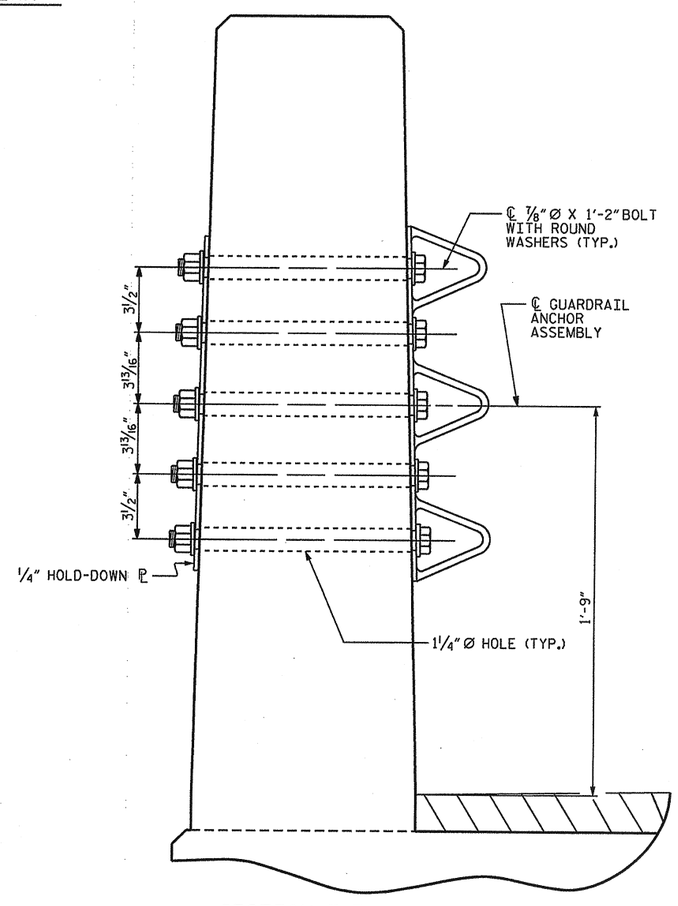

SECTION E-E

GUARDRAIL ANCHOR ASSEMBLY DETAILS

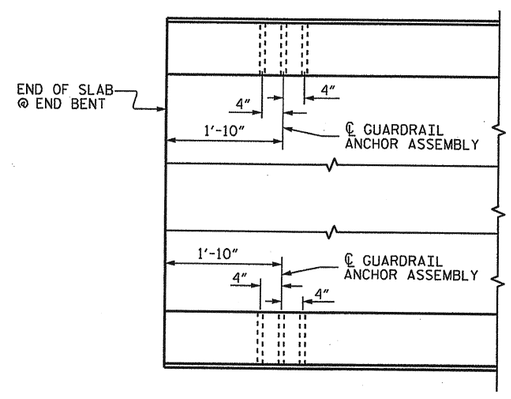

PLAN

LOCATION OF ANCHORS FOR GUARDRAIL

END BENT #1 SHOWN, END BENT #2 SIMILAR.

NOTES

THE GUARDRAIL ANCHOR ASSEMBLY SHALL CONSIST OF A 1/4" HOLD DOWN PLATE AND 7 - 7/8" Ø BOLTS WITH NUTS AND WASHERS.

THE HOLD-DOWN PLATE SHALL CONFORM TO AASHTO M270 GRADE 36. AFTER FABRICATION, THE HOLD-DOWN PLATE SHALL BE HOT-DIP GALVANIZED IN ACCORDANCE WITH AASHTO M111.

BOLTS SHALL CONFORM TO THE REQUIREMENTS OF ASTM A307 AND NUTS SHALL CONFORM TO THE REQUIREMENTS OF AASHTO M291. BOLTS, NUTS AND WASHERS SHALL BE GALVANIZED. (AT THE CONTRACTOR'S OPTION, STAINLESS STEEL BOLTS, NUTS AND WASHERS MAY BE USED AS AN ALTERNATE FOR THE 7/8" Ø GALVANIZED BOLTS, NUTS AND WASHERS. THEY SHALL CONFORM TO OR EXCEED THE MECHANICAL REQUIREMENTS OF ASTM A307. THE USE OF THIS ALTERNATE SHALL BE APPROVED BY THE ENGINEER.)

THE GUARDRAIL ANCHOR ASSEMBLY IS REQUIRED AT ALL POINTS WHERE APPROACH GUARDRAIL IS TO BE ATTACHED TO THE END OF BARRIER RAIL. FOR POINTS OF ATTACHMENT, SEE SKETCH.

AFTER INSTALLATION, THE EXPOSED THREAD OF THE BOLT SHALL BE BURRED WITH A SHARP POINTED TOOL.

THE COST OF THE GUARDRAIL ANCHOR ASSEMBLY SHALL BE INCLUDED IN THE UNIT CONTRACT PRICE BID FOR VERTICAL CONCRETE BARRIER RAIL.

THE VERTICAL REINFORCING BARS MAY BE SHIFTED SLIGHTLY IN THE VERTICAL CONCRETE BARRIER RAIL TO CLEAR ASSEMBLY BOLTS.

THE 1 1/4" Ø HOLES SHALL BE FORMED OR DRILLED WITH A CORE BIT. IMPACT TOOLS WILL NOT BE PERMITTED. ANY CONCRETE DAMAGED BY THIS WORK SHALL BE REPAIRED TO THE SATISFACTION OF THE ENGINEER.

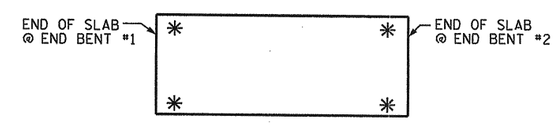

SKETCH SHOWING POINTS OF ATTACHMENT

✳ DENOTES GUARDRAIL ANCHOR ASSEMBLY

PROJECT NO. BD-5104L

NASH COUNTY

STATION: 25+45.00 -L-

NORTH CAROLINA PROFESSIONAL SEAL 14045 ENGINEER TIMOTHY C. COGGINS

06/05/13

STATE OF NORTH CAROLINA
DEPARTMENT OF TRANSPORTATION
RALEIGH

STANDARD
GUARDRAIL ANCHORAGE FOR VERTICAL CONCRETE BARRIER RAIL

REVISIONS						SHEET NO.
NO.	BY:	DATE:	NO.	BY:	DATE:	49
1			3			TOTAL SHEETS
2			4			63

ASSEMBLED BY : REZA KOUCHEKI DATE : 5-07-13
CHECKED BY : M.M. AHMED DATE : 5-08-13

DRAWN BY : MAA 5/10
CHECKED BY : GM 5/10

ADDED 5/6/10
REV. 10/1/11 MAA/GM
REV. 12/5/11 MAA/GM

04-JUN-2013 09:22
S:\DPG\\Tim\Division 4 LIBR\BD-5104L\gkoucheki\BD5104L_PLANS.dgn
tcoggins

(SHT 1) STD. NO. GRA3

NOTES

STIRRUPS IN CAP MAY BE SHIFTED AS NECESSARY TO CLEAR DOWELS.

THE CONCRETE IN THE SHADED AREA OF THE WING SHALL BE POURED AFTER THE VERTICAL CONCRETE BARRIER RAIL IS CAST IF SLIP FORMING IS USED.

FOR PILE SPLICE DETAILS, SEE SHEET 4 OF 4.

FOR WING DETAILS, SEE SHEET 3 OF 4.

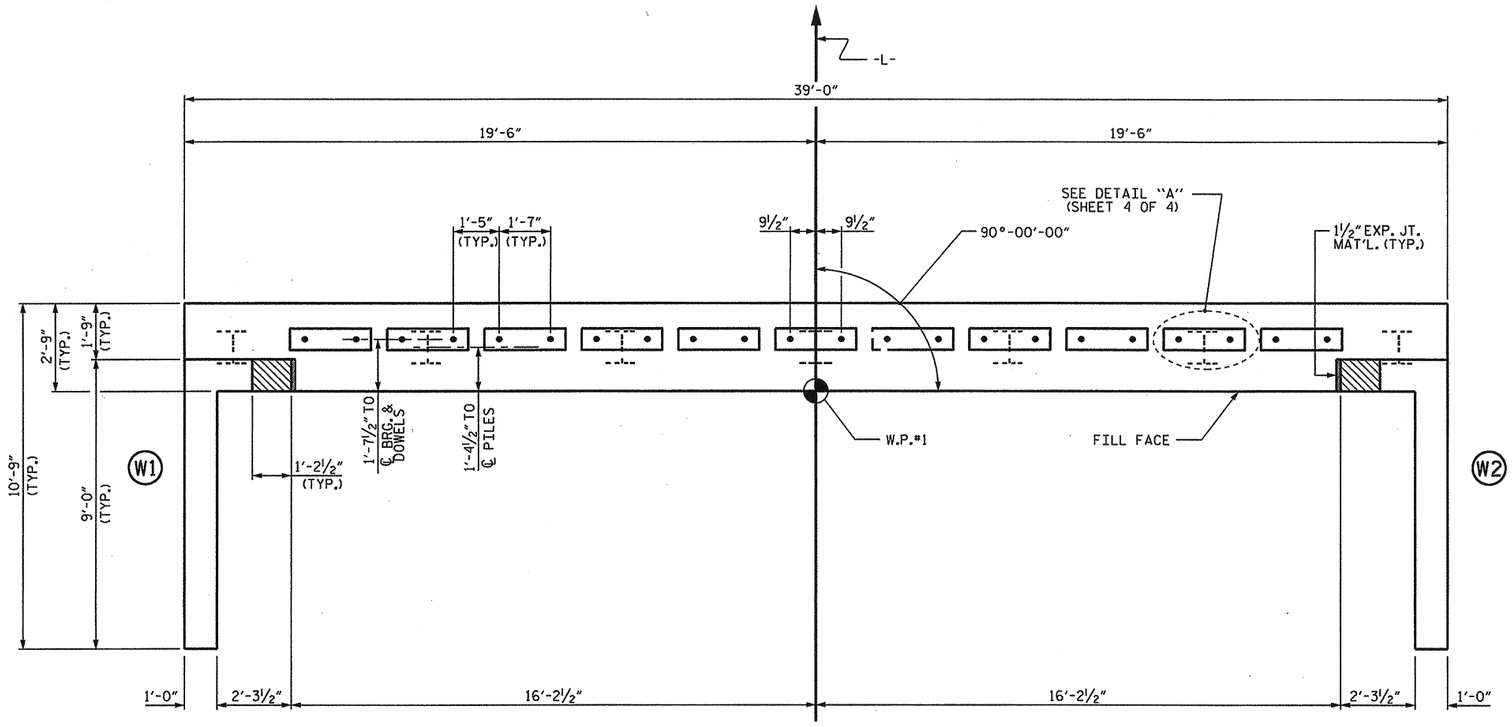

PLAN

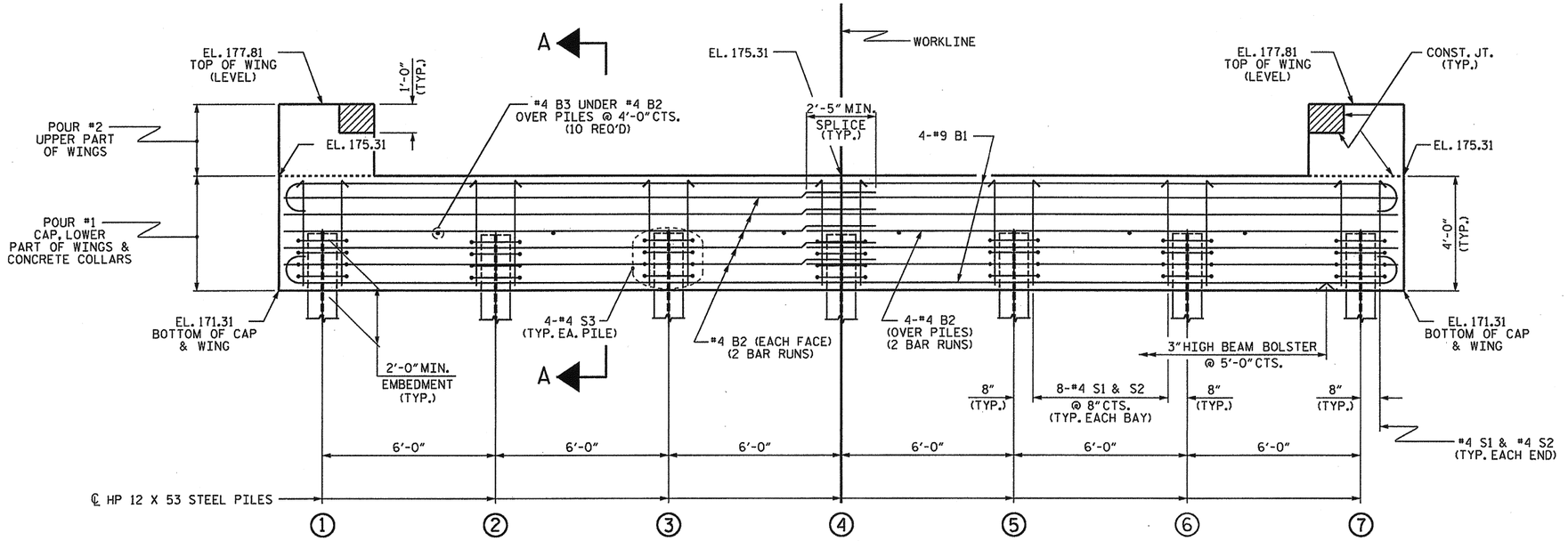

ELEVATION

WINGS NOT SHOWN FOR CLARITY.
FOR SECTION A-A, SEE SHEET 4 OF 4.
CONCRETE COLLARS FOR STEEL PILES NOT SHOWN IN PLAN AND ELEVATION VIEWS FOR CLARITY.
SEE "CORROSION PROTECTION FOR STEEL PILES DETAIL", SHEET 4 OF 4.

PROJECT NO. BD-5104L
NASH COUNTY
STATION: 25+45.00 -L-

SHEET 1 OF 4

STATE OF NORTH CAROLINA
DEPARTMENT OF TRANSPORTATION
RALEIGH

SUBSTRUCTURE

END BENT No. 1

NORTH CAROLINA PROFESSIONAL SEAL 14045 ENGINEER TIMOTHY W. COGGINS
06/05/13

REVISIONS						SHEET NO.
NO.	BY:	DATE:	NO.	BY:	DATE:	50
1			3			TOTAL SHEETS
2			4			63

ASSEMBLED BY : REZA KOUCHEKI DATE : 4/17/13
CHECKED BY : M.M. AHMED DATE : 5/29/13
DRAWN BY : WJH 12/11
CHECKED BY : AAC 12/11

04-JUN-2013 09:22
S:\DPG\Tim\Division 4 LIBR\BD-5104L\gkoucheki\BD5104L_PLANS.dgn
tcoggins

STD. NO. EB_33_90S4

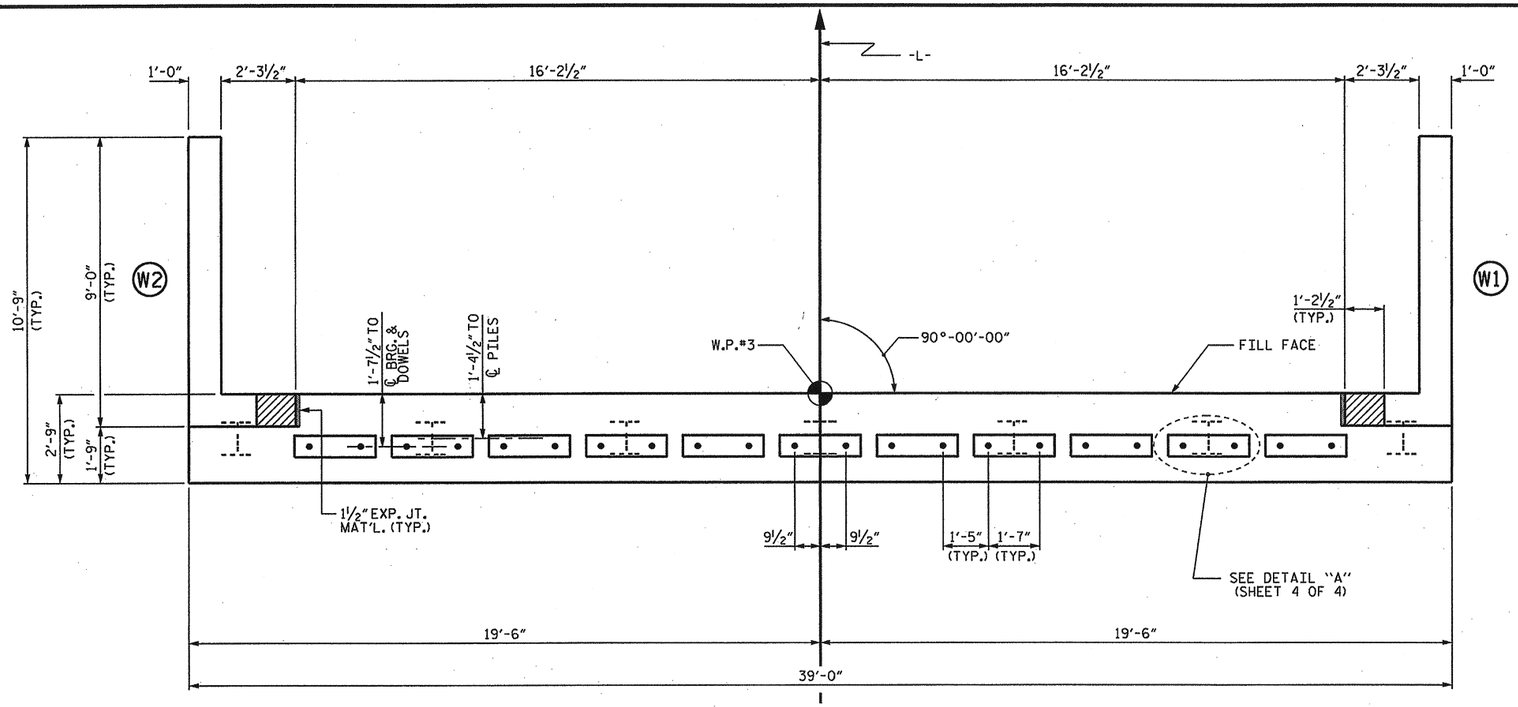

PLAN

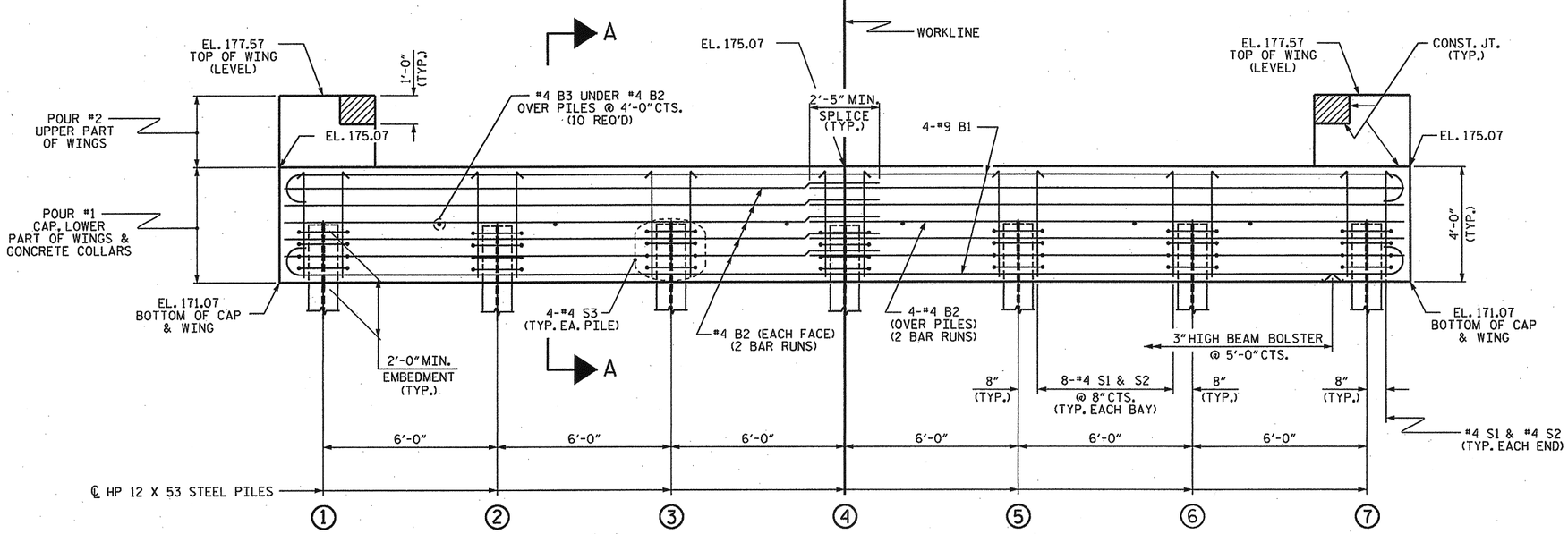

ELEVATION

WINGS NOT SHOWN FOR CLARITY.
FOR SECTION A-A, SEE SHEET 4 OF 4.
CONCRETE COLLARS FOR STEEL PILES NOT SHOWN IN PLAN AND ELEVATION VIEWS FOR CLARITY.
SEE "CORROSION PROTECTION FOR STEEL PILES DETAIL", SHEET 4 OF 4.

NOTES

STIRRUPS IN CAP MAY BE SHIFTED AS NECESSARY TO CLEAR DOWELS.

THE CONCRETE IN THE SHADED AREA OF THE WING SHALL BE POURED AFTER THE VERTICAL CONCRETE BARRIER RAIL IS CAST IF SLIP FORMING IS USED.

FOR PILE SPLICE DETAILS, SEE SHEET 4 OF 4.

FOR WING DETAILS, SEE SHEET 3 OF 4.

PROJECT NO. BD-5104L
NASH COUNTY
STATION: 25+45.00 -L-

SHEET 2 OF 4

STATE OF NORTH CAROLINA
DEPARTMENT OF TRANSPORTATION
RALEIGH

SUBSTRUCTURE

END BENT No. 2

NORTH CAROLINA PROFESSIONAL SEAL 14045 ENGINEER TIMOTHY L. COGGINS
06/05/13

ASSEMBLED BY : REZA KOUCHEKI	DATE : 4/17/13
CHECKED BY : M.M. AHMED	DATE : 5/29/13
DRAWN BY : WJH 12/11	
CHECKED BY : AAC 12/11	

REVISIONS						SHEET NO.
NO.	BY:	DATE:	NO.	BY:	DATE:	51
1			3			TOTAL SHEETS
2			4			63

04-JUN-2013 09:22
S:\DPGI\Tim\Division 4 LIBR\BD-5104L\gkoucheki\BD5104L_PLANS.dgn
tcoggins

STD. NO. EB_33_90S4

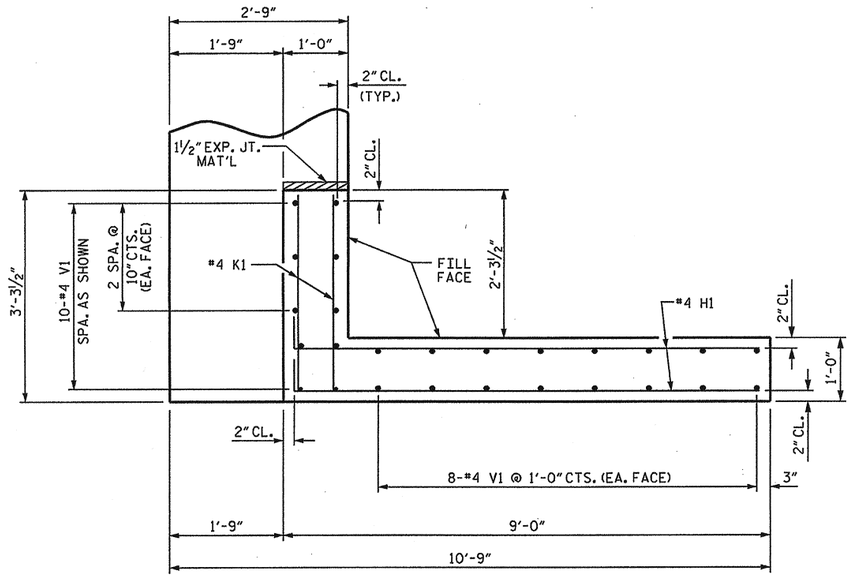

PLAN OF WING (W1)

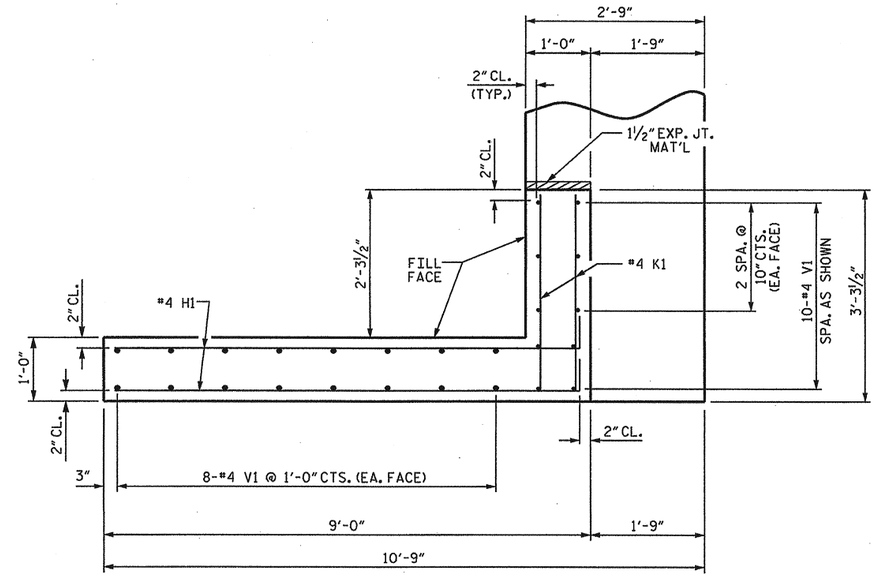

PLAN OF WING (W2)

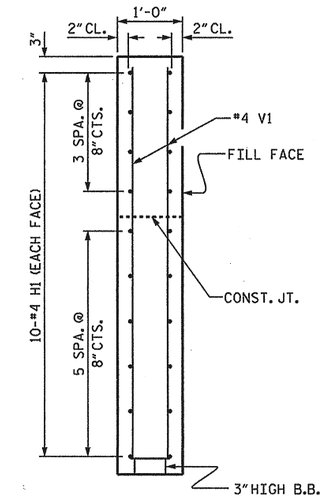

SECTION X-X

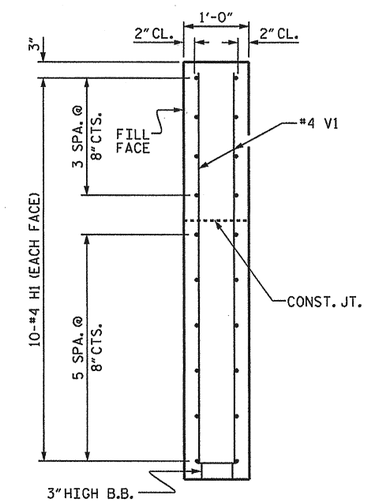

SECTION Y-Y

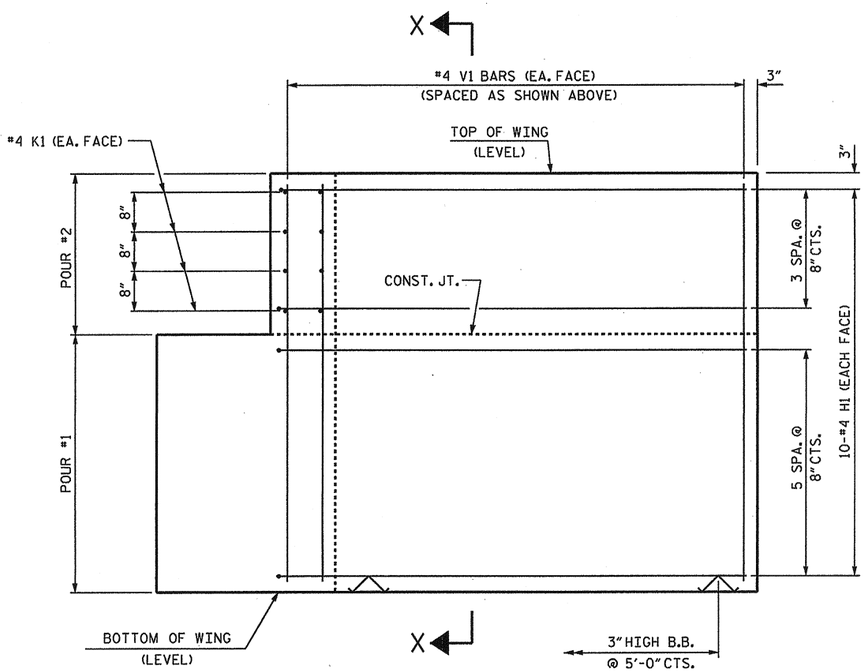

ELEVATION OF WING (W1)

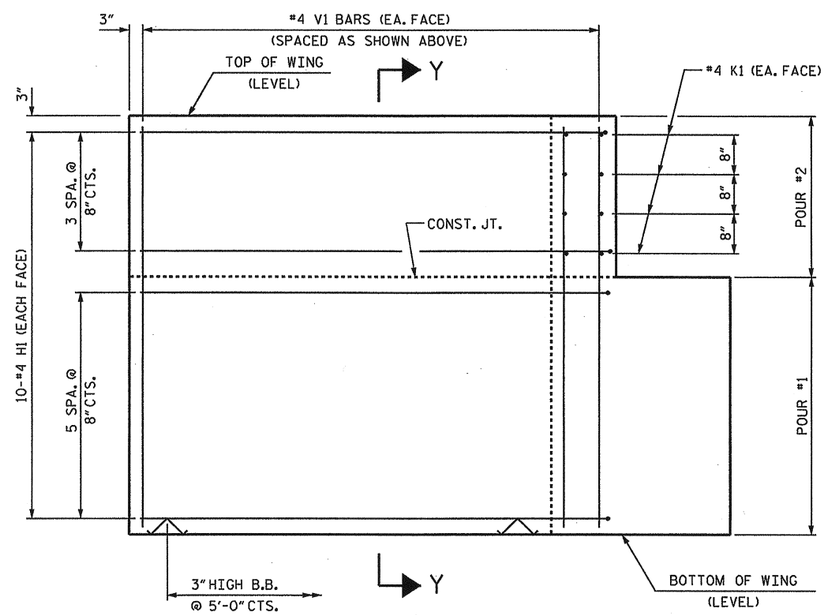

ELEVATION OF WING (W2)

WING DETAILS

PROJECT NO. BD-5104L

NASH COUNTY

STATION: 25+45.00 -L-

SHEET 3 OF 4

STATE OF NORTH CAROLINA
DEPARTMENT OF TRANSPORTATION
RALEIGH

SUBSTRUCTURE

END BENT
WING DETAILS

NORTH CAROLINA PROFESSIONAL SEAL 14045 ENGINEER TIMOTHY U. COGGINS

06/05/13

REVISIONS							SHEET NO.
NO.	BY:	DATE:	NO.	BY:	DATE:		52
1			3				TOTAL SHEETS
2			4				63

ASSEMBLED BY : REZA KOUCHEKI	DATE : 4/17/13
CHECKED BY : M.M. AHMED	DATE : 5/29/13
DRAWN BY : WJH 12/11	
CHECKED BY : AAC 12/11	

04-JUN-2013 09:21
S:\DPGI\Tim\Division 4 LIBR\BD-5104L\gkoucheki\BD5104L_PLANS.dgn
tcoggins

STD. NO. EB_33_90S4

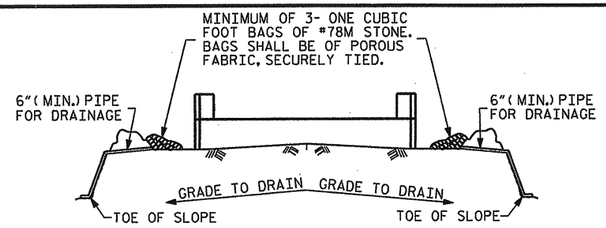

BAGGED STONE AND PIPE SHALL BE PLACED IMMEDIATELY AFTER COMPLETION OF END BENT EXCAVATION. PIPE MAY BE EITHER CONCRETE, CORRUGATED STEEL, CORRUGATED ALUMINUM ALLOY, OR CORRUGATED PLASTIC. PERFORATED PIPE WILL NOT BE ALLOWED.

BAGGED STONE SHALL REMAIN IN PLACE UNTIL THE ENGINEER DIRECTS THAT IT BE REMOVED. THE CONTRACTOR SHALL REMOVE AND DISPOSE OF SILT ACCUMULATIONS AT BAGGED STONE WHEN SO DIRECTED BY THE ENGINEER. BAGS SHALL BE REMOVED AND REPLACED WHENEVER THE ENGINEER DETERMINES THAT THEY HAVE DETERIORATED AND LOST THEIR EFFECTIVENESS.

NO SEPARATE PAYMENT WILL BE MADE FOR THIS WORK AND THE ENTIRE COST OF THIS WORK SHALL BE INCLUDED IN THE UNIT CONTRACT PRICE BID FOR THE SEVERAL PAY ITEMS.

TEMPORARY DRAINAGE AT END BENT

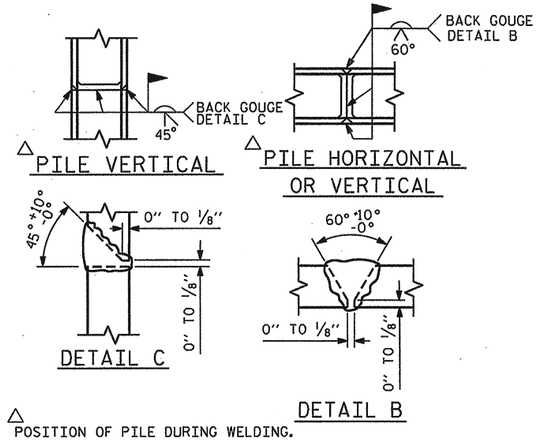

△ POSITION OF PILE DURING WELDING.

PILE SPLICE DETAILS

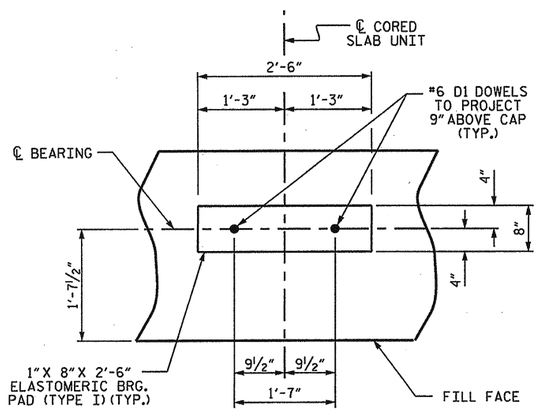

DETAIL "A"

(END BENT No. 1 SHOWN, END BENT No. 2 SIMILAR BY ROTATION)

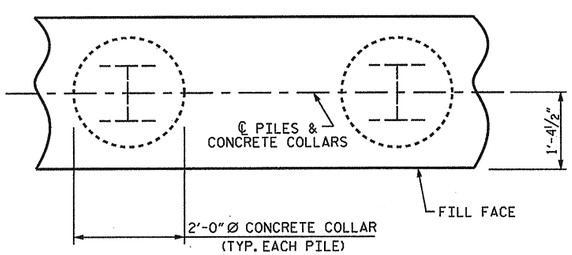

PLAN

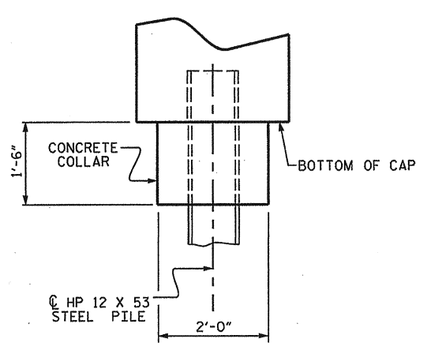

ELEVATION

CORROSION PROTECTION FOR STEEL PILES DETAIL

(END BENT No. 1 SHOWN, END BENT No. 2 SIMILAR BY ROTATION)

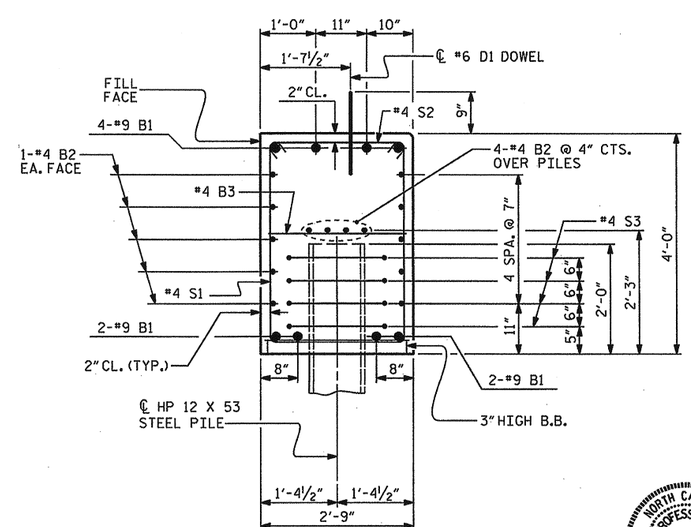

SECTION A-A

(CONCRETE COLLAR NOT SHOWN FOR CLARITY. SEE "CORROSION PROTECTION FOR STEEL PILES DETAIL.")

BAR TYPES

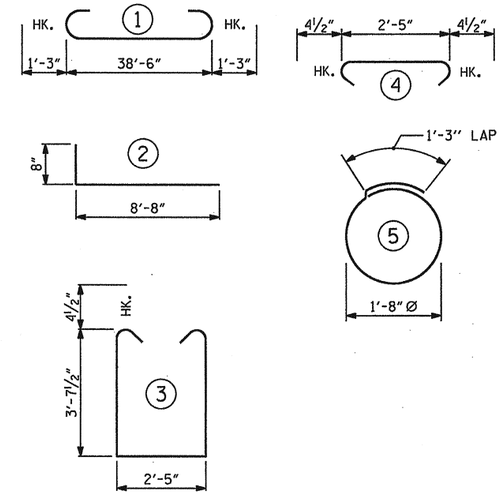

ALL BAR DIMENSIONS ARE OUT TO OUT.

END BENT No. 1	END BENT No. 2
HP 12 X 53 STEEL PILES	HP 12 X 53 STEEL PILES
NO: 7 210 LIN. FT.	NO: 7 125 LIN. FT.

STEEL PILE POINTS NO: 7

BILL OF MATERIAL FOR ONE END BENT

BAR	NO.	SIZE	TYPE	LENGTH	WEIGHT
B1	8	#9	1	41'-0"	1115
B2	28	#4	STR	20'-7"	385
B3	10	#4	STR	2'-5"	16
D1	22	#6	STR	1'-6"	50
H1	40	#4	2	9'-4"	249
K1	16	#4	STR	2'-11"	31
S1	50	#4	3	10'-5"	348
S2	50	#4	4	3'-2"	106
S3	28	#4	5	6'-6"	122
V1	52	#4	STR	6'-2"	214

REINFORCING STEEL (FOR ONE END BENT) 2636 LBS.

CLASS A CONCRETE BREAKDOWN (FOR ONE END BENT)

POUR #1 CAP, LOWER PART OF WINGS & COLLARS 19.5 C.Y.

POUR #2 UPPER PART OF WINGS 2.1 C.Y.

TOTAL CLASS A CONCRETE 21.6 C.Y.

PROJECT NO. BD-5104L
NASH COUNTY
STATION: 25+45.00 -L-

SHEET 4 OF 4

STATE OF NORTH CAROLINA
DEPARTMENT OF TRANSPORTATION
RALEIGH

SUBSTRUCTURE

END BENT No. 1 & 2 DETAILS

NORTH CAROLINA PROFESSIONAL SEAL 14045 ENGINEER TIMOTHY W. COGGINS
06/05/13

REVISIONS							SHEET NO.
NO.	BY:	DATE:	NO.	BY:	DATE:		53
1			3				TOTAL SHEETS
2			4				63

ASSEMBLED BY : REZA KOUCHEKI DATE : 4/18/13
CHECKED BY : M.M. AHMED DATE : 5/29/13
DRAWN BY : WJH 12/11
CHECKED BY : AAC 12/11

04-JUN-2013 09:20
S:\DPGI\Tim\Division 4 LIBR\BD-5104L\gkoucheki\BD5104L_PLANS.dgn
tcoggins

STD. NO. EB_33_90S4

NOTES

STIRRUPS IN CAP MAY BE SHIFTED AS NECESSARY TO CLEAR DOWELS.

THE LATERAL GUIDES ARE NOT TO BE POURED UNTIL AFTER THE CORED SLAB UNITS ARE IN PLACE.

★ INVERT ALTERNATE STIRRUPS.

GALVANIZE THE TOP OF EACH INTERIOR BENT PILE A MINIMUM OF 29 FEET. GALVANIZE IN ACCORDANCE WITH SECTION 1076 OF THE STANDARD SPECIFICATIONS.

THE CONTRACTOR HAS THE OPTION TO OMIT THE LATERAL GUIDE IF APPROVED BY THE ENGINEER.

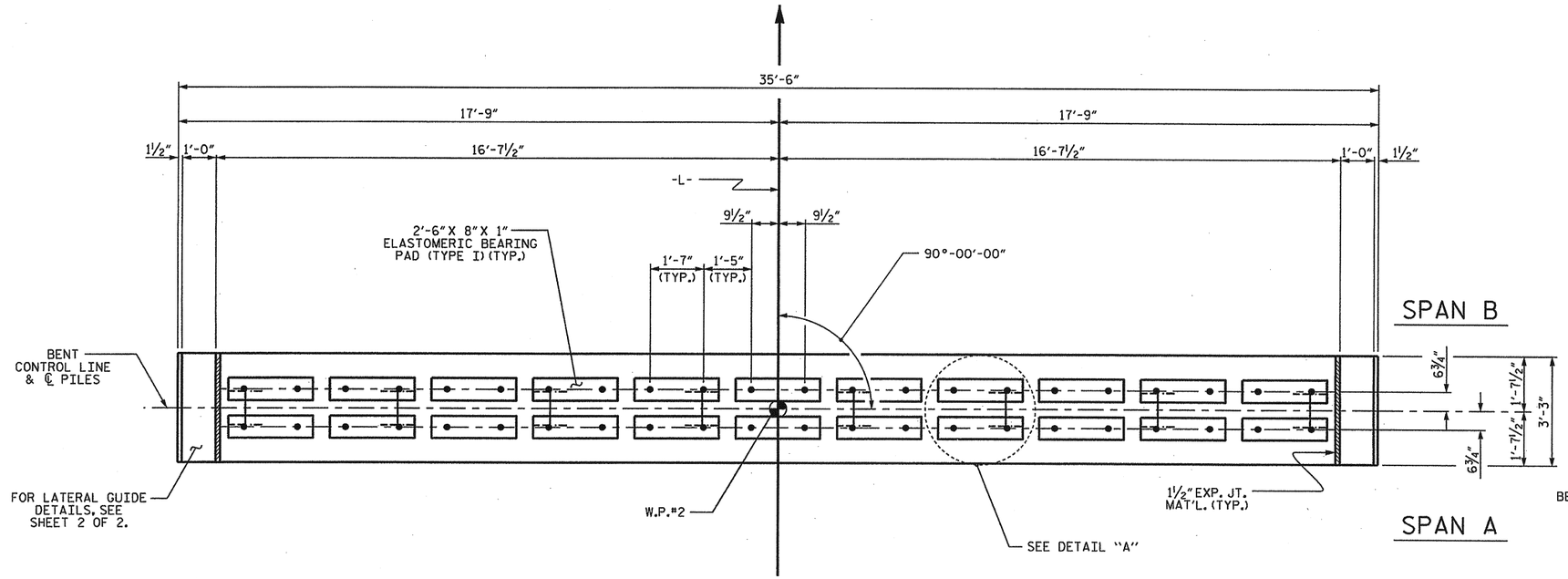

PLAN

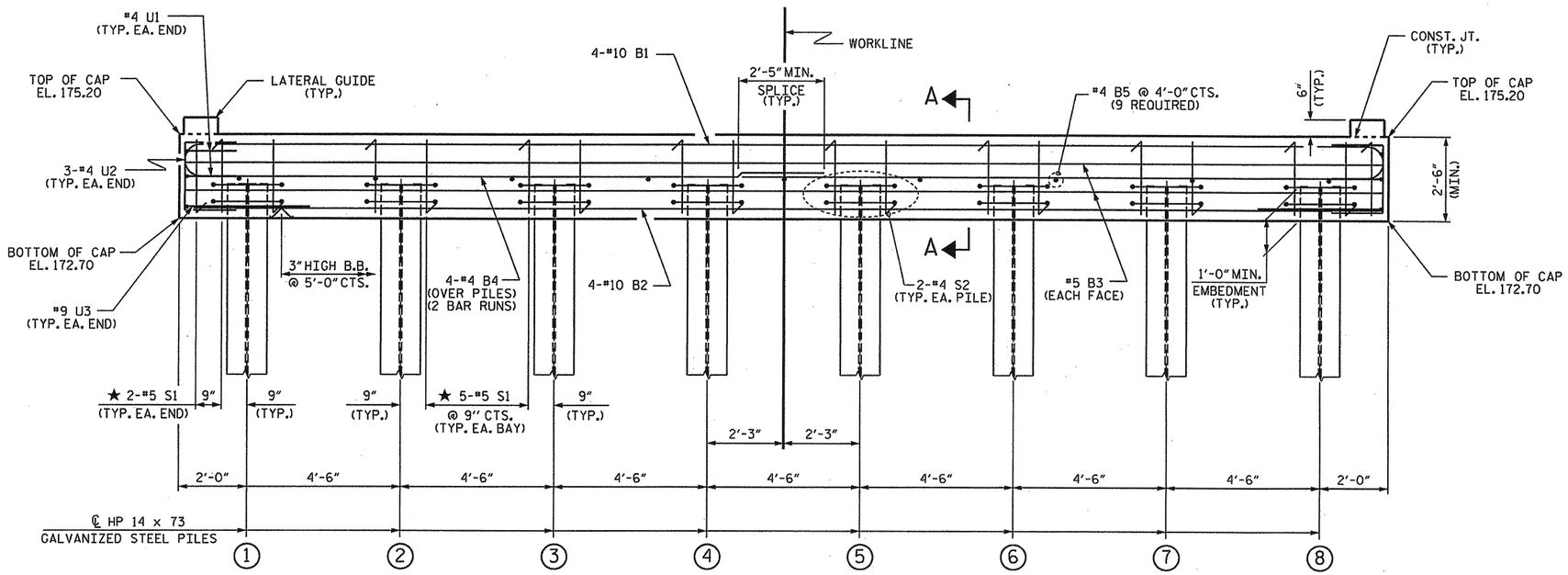

ELEVATION

FOR SECTION A-A, SEE SHEET 2 OF 2

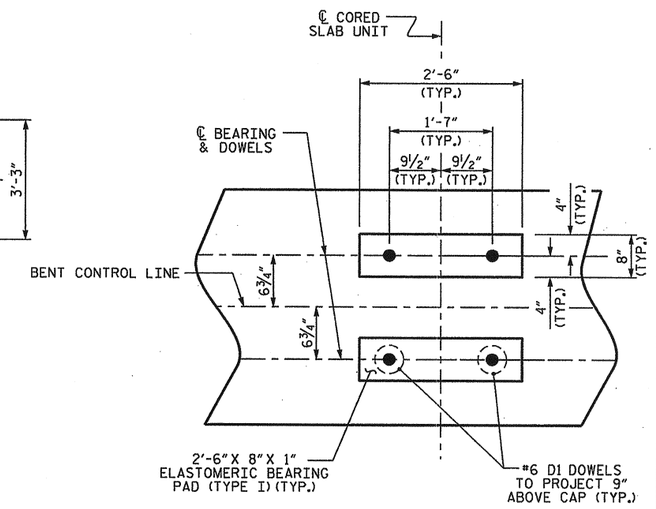

DETAIL "A"

(DIMENSIONS ARE TYPICAL EACH BEARING)

PROJECT NO. BD-5104L

NASH COUNTY

STATION: 25+45.00 -L-

SHEET 1 OF 2

STATE OF NORTH CAROLINA
DEPARTMENT OF TRANSPORTATION
RALEIGH

SUBSTRUCTURE

BENT No. 1

NORTH CAROLINA PROFESSIONAL SEAL 14045 ENGINEER TIMOTHY W. COGGINS

06/05/13

REVISIONS							SHEET NO.
NO.	BY:	DATE:	NO.	BY:	DATE:		54
1			3				TOTAL SHEETS
2			4				63

ASSEMBLED BY : REZA KOUCHEKI	DATE : 5/28/13
CHECKED BY : M.M. AHMED	DATE : 5/29/13
DRAWN BY : DGE 05/10	
CHECKED BY : MKT 05/10	

04-JUN-2013 09:20
S:\DPG1\Tim\Division 4 LIBR\BD-5104L\gkoucheki\BD5104L_PLANS.dgn
tcoggins

STD. NO. 14" HP_BT_33_90S_<60'

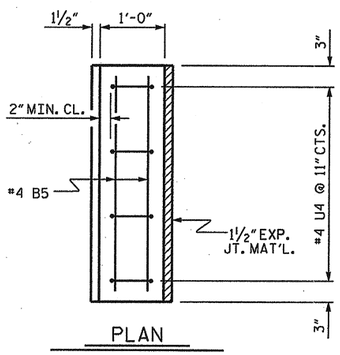

PLAN

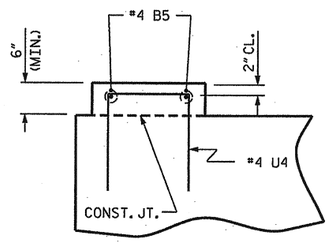

ELEVATION

LATERAL GUIDE DETAILS

(LEFT LATERAL GUIDE SHOWN, RIGHT SIDE SIMILAR)

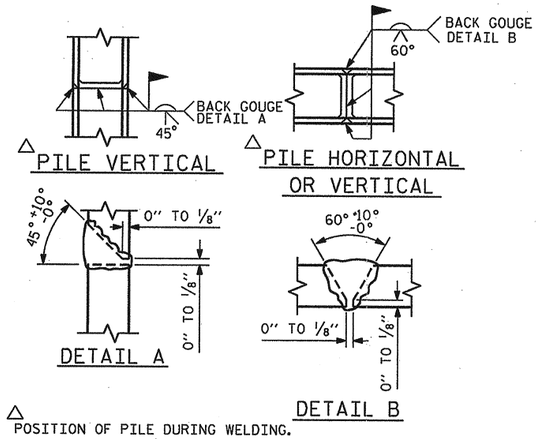

△ POSITION OF PILE DURING WELDING.

PILE SPLICE DETAILS

BAR TYPES

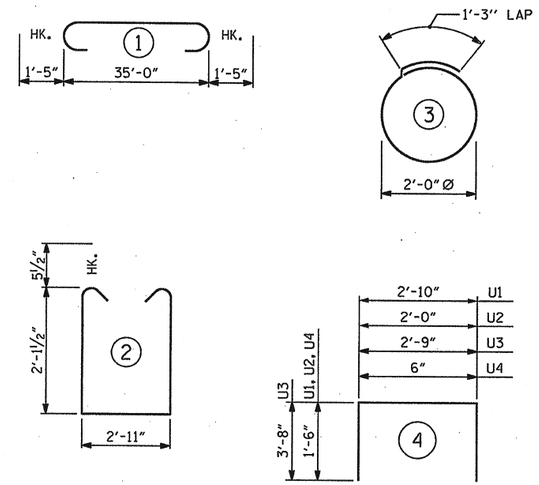

ALL BAR DIMENSIONS ARE OUT TO OUT.

BILL OF MATERIAL FOR ONE BENT

BAR	NO.	SIZE	TYPE	LENGTH	WEIGHT
B1	4	#10	1	37'-10"	651
B2	4	#10	STR	35'-2"	605
B3	4	#5	STR	35'-2"	147
B4	8	#4	STR	18'-10"	101
B5	13	#4	STR	2'-11"	25
D1	44	#6	STR	1'-6"	99
S1	39	#5	2	8'-1"	329
S2	16	#4	3	7'-7"	81
U1	4	#4	4	5'-10"	16
U2	6	#4	4	5'-0"	20
U3	2	#9	4	10'-1"	69
U4	8	#4	4	3'-6"	19

REINFORCING STEEL (FOR ONE BENT) 2162 LBS

CLASS A CONCRETE BREAKDOWN (FOR ONE BENT)

POUR #1 (CAP) 10.7 C.Y.

POUR #2 (LATERAL GUIDES) 0.1 C.Y.

TOTAL CLASS A CONCRETE 10.8 C.Y.

HP 14 X 73 GALVANIZED STEEL PILES

No. 8 420 LIN. FT.

PILE REDRIVES 4 EA.

PREDRILLING FOR PILES 100 LIN. FT.

STEEL PILE POINTS 8 EA.

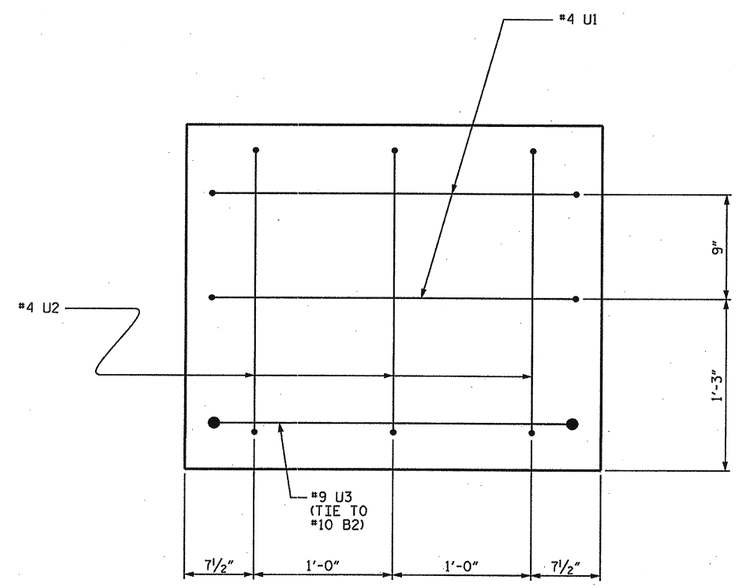

END OF CAP VIEW

(TYPICAL BOTH ENDS)

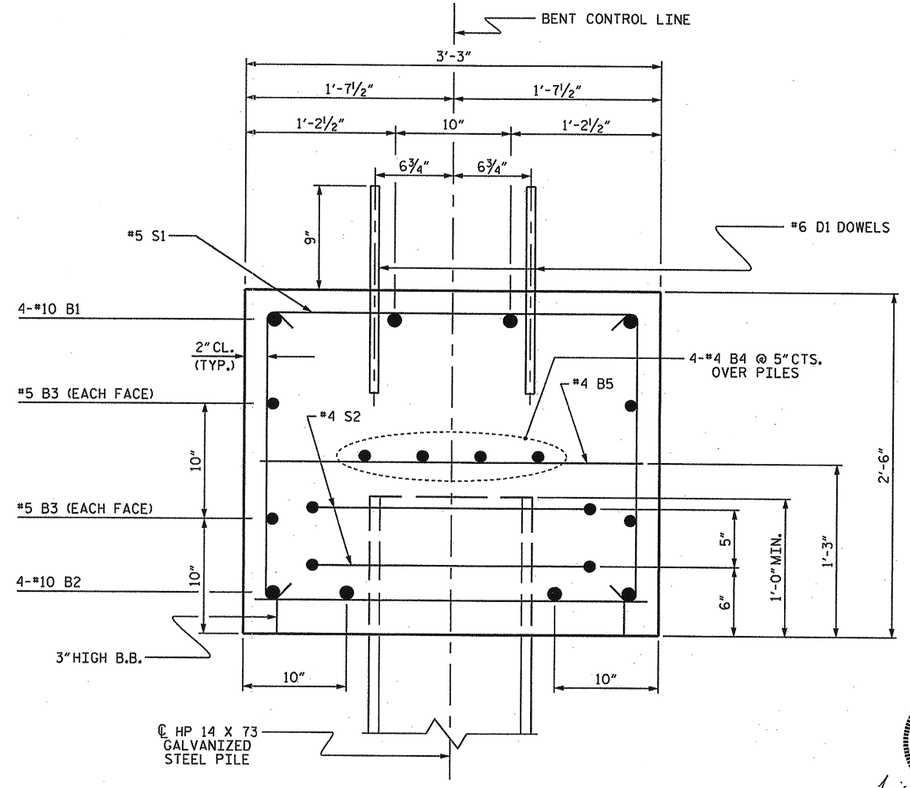

SECTION A-A

NORTH CAROLINA PROFESSIONAL SEAL 14045 ENGINEER TIMOTHY L. COGGINS

1 06/12/13

PROJECT NO. BD-5104L

NASH COUNTY

STATION: 25+45.00 -L-

SHEET 2 OF 2

STATE OF NORTH CAROLINA
DEPARTMENT OF TRANSPORTATION
RALEIGH

SUBSTRUCTURE

BENT No. 1

REVISIONS								SHEET NO.
NO.	BY:	DATE:	NO.	BY:	DATE:			55
1			3					TOTAL SHEETS
2			4					63

DRAWN BY : REZA KOUCHEKI DATE : 5/28/13
CHECKED BY : M.M. AHMED DATE : 5/29/13

DRAWN BY : DGE 05/10
CHECKED BY : MKT 05/10

12-JUN-2013 15:00
S:\DPGI\Tim\Division 4 LIBR\BD-5104L\gkoucheki\BD5104L_PLANS.dgn
tcoggins

STD. NO. 14" HP_BT_33_90S_<60'

NOTES :

FOR BERM WIDTH DIMENSIONS, SEE GENERAL DRAWING.

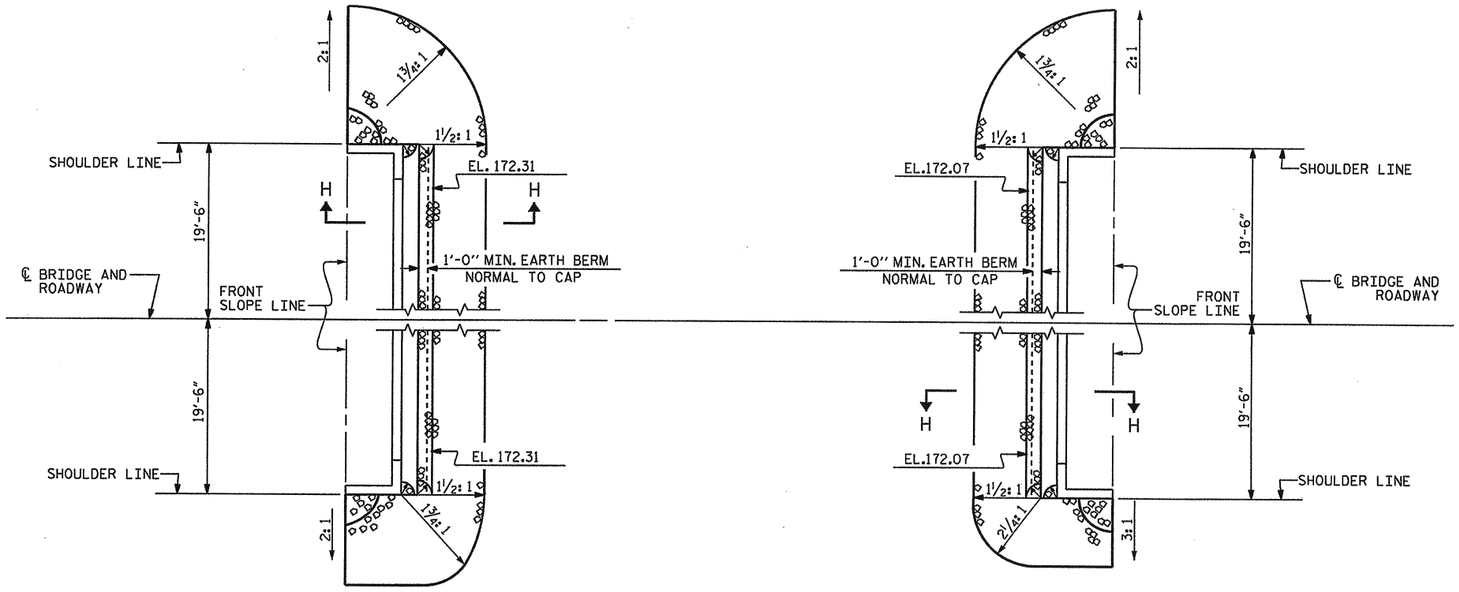

SHOULDER RIP RAP IS HIGHER THAN BERM RIP RAP

ESTIMATED QUANTITIES		
BRIDGE @ STA. 25+45.00 -L-	RIP RAP CLASS II (2'-0" THICK)	GEOTEXTILE FOR DRAINAGE
	TONS	SQUARE YARDS
END BENT 1	91	101
END BENT 2	74	83

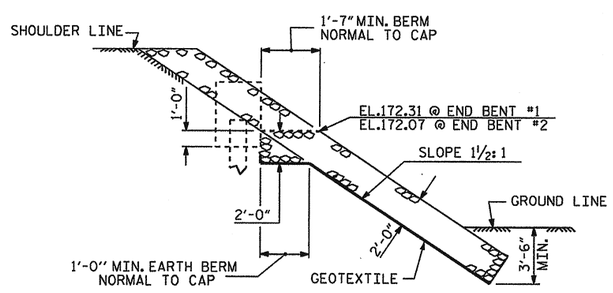

SECTION H-H

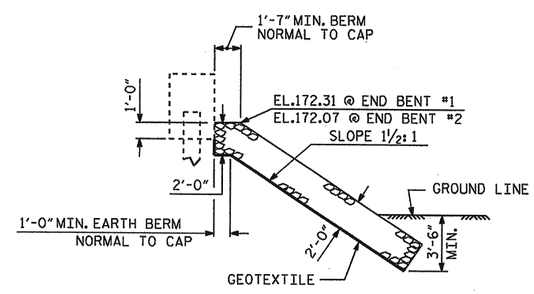

℄ SECTION

BERM RIP RAPPED

PROJECT NO. BD-5104L

NASH COUNTY

STATION: 25+45.00 -L-

STATE OF NORTH CAROLINA
DEPARTMENT OF TRANSPORTATION
RALEIGH

STANDARD

RIP RAP DETAILS

NORTH CAROLINA PROFESSIONAL SEAL 14045 ENGINEER TIMOTHY G. COGGINS

06/05/13

ASSEMBLED BY : REZA KOUCHEKI	DATE : 5/09/13
CHECKED BY : M.M. AHMED	DATE : 5/09/13

DRAWN BY : REK 1/84	REV. 5/1/06R TLA/GM
CHECKED BY : RDU 1/84	REV. 10/1/11 MAA/GM
	REV. 12/21/11 MAA/GM

REVISIONS							SHEET NO.
NO.	BY:	DATE:	NO.	BY:	DATE:		56
1			3				TOTAL SHEETS
2			4				63

04-JUN-2013 09:19
S:\DPGI\Tim\Division 4 LIBR\BD-5104L\gkoucheki\BD5104L_PLANS.dgn
tcoggins

STD. NO. RR1 (Sht 2)

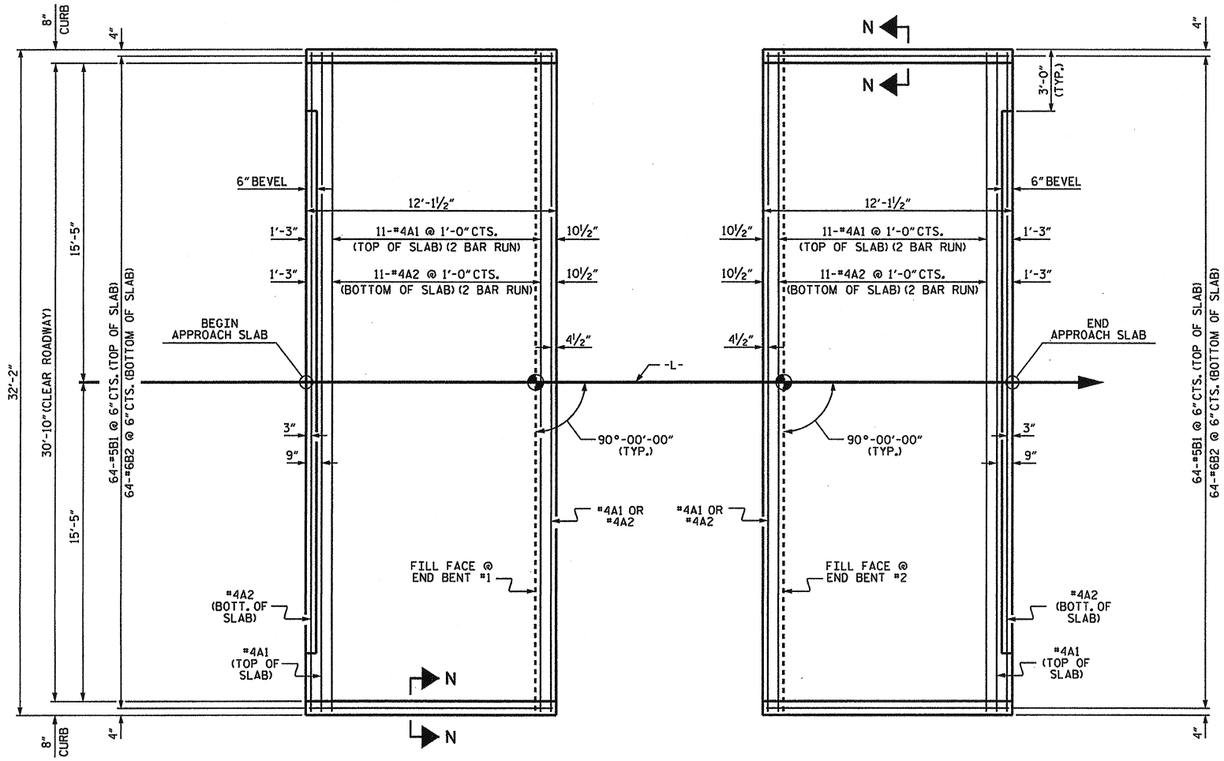

PLAN @ END BENT #1

PLAN @ END BENT #2

DIMENSIONS SHOWN ARE TYPICAL FOR BOTH APPROACH SLABS

NOTES

FOR BRIDGE APPROACH FILL INCLUDING GEOTEXTILE, 4" Ø DRAINAGE PIPE, AND #78M STONE BACKFILL, SEE ROADWAY PLANS.

GEOTEXTILE SHALL BE TYPE 1IN ACCORDANCE WITH THE STANDARD SPECIFICATIONS SECTION 1056.

#78M STONE BACKFILL (CLASS V SELECT MATERIAL) SHALL BE IN ACCORDANCE WITH STANDARD SPECIFICATIONS SECTION 1016.

#78M STONE BACKFILL IS TO BE CONTINUOUS ALONG FILL FACE OF BACKWALL FROM OUTSIDE EDGE TO OUTSIDE EDGE OF APPROACH SLAB.

FOR THE 4" Ø DRAINAGE PIPE OUTLET(S), SEE ROADWAY STANDARD DRAWINGS.

AREA BETWEEN THE WINGWALL AND APPROACH SLAB SHALL BE GRADED TO DRAIN THE WATER AWAY FROM THE FILL FACE OF THE BRIDGE AND SHALL BE PAVED. SEE ROADWAY PLANS.

APPROACH SLAB GROOVING IS NOT REQUIRED.

BILL OF MATERIAL

APPROACH SLAB AT EB #1

BAR	NO.	SIZE	TYPE	LENGTH	WEIGHT
* A1	26	#4	STR	16'-11"	294
A2	26	#4	STR	16'-9"	291
* B1	64	#5	STR	11'-2"	745
B2	64	#6	STR	11'-8"	1121
REINFORCING STEEL				LBS.	1412
* EPOXY COATED REINFORCING STEEL				LBS.	1039
CLASS AA CONCRETE				C.Y.	18.6

APPROACH SLAB AT EB #2

BAR	NO.	SIZE	TYPE	LENGTH	WEIGHT
* A1	26	#4	STR	16'-11"	294
A2	26	#4	STR	16'-9"	291
* B1	64	#5	STR	11'-2"	745
B2	64	#6	STR	11'-8"	1121
REINFORCING STEEL				LBS.	1412
* EPOXY COATED REINFORCING STEEL				LBS.	1039
CLASS AA CONCRETE				C.Y.	18.6

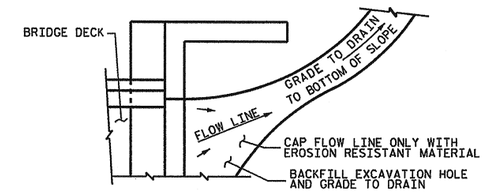

NOTE: IF THE APPROACH SLAB IS NOT CONSTRUCTED IMMEDIATELY AFTER THE BACKFILLING OF THE END BENT EXCAVATION, GRADE TO DRAIN TO THE BOTTOM OF THE SLOPE AND PROVIDE EROSION RESISTANT MATERIAL, SUCH AS FIBERGLASS ROVING OR AS DIRECTED BY THE ENGINEER TO PREVENT SOIL EROSION AND TO PROTECT THE AREA ADJACENT TO THE STRUCTURE. THE CONTRACTOR WILL BE REQUIRED TO REMOVE THESE MATERIALS PRIOR TO CONSTRUCTION OF THE APPROACH SLAB.

TEMPORARY DRAINAGE DETAIL

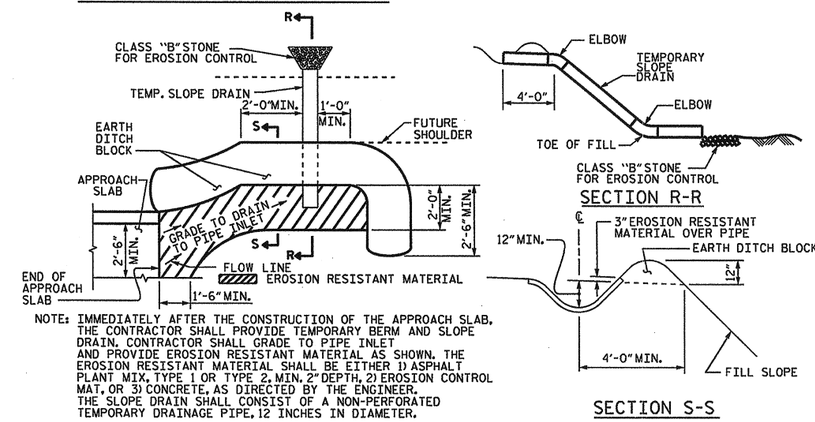

NOTE: IMMEDIATELY AFTER THE CONSTRUCTION OF THE APPROACH SLAB, THE CONTRACTOR SHALL PROVIDE TEMPORARY BERM AND SLOPE DRAIN. CONTRACTOR SHALL GRADE TO PIPE INLET AND PROVIDE EROSION RESISTANT MATERIAL AS SHOWN. THE EROSION RESISTANT MATERIAL SHALL BE EITHER 1) ASPHALT PLANT MIX, TYPE 1 OR TYPE 2, MIN. 2" DEPTH, 2) EROSION CONTROL MAT, OR 3) CONCRETE, AS DIRECTED BY THE ENGINEER. THE SLOPE DRAIN SHALL CONSIST OF A NON-PERFORATED TEMPORARY DRAINAGE PIPE, 12 INCHES IN DIAMETER.

PLAN VIEW

TEMPORARY BERM AND SLOPE DRAIN DETAILS

(TO BE USED WHEN SHOULDER BERM GUTTER IS REQUIRED)

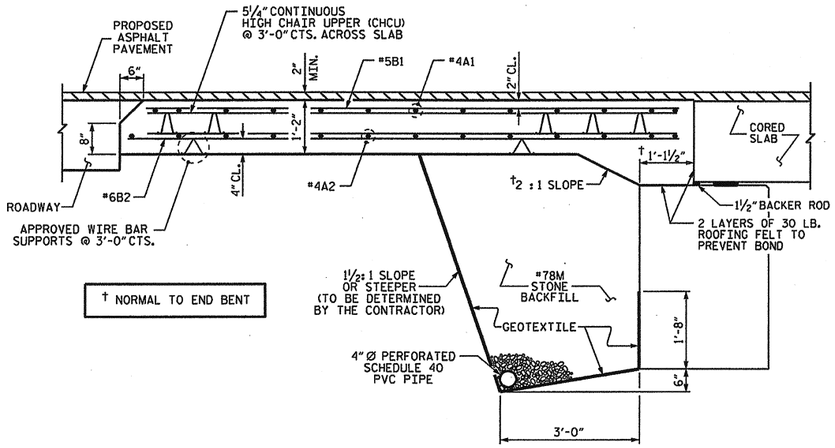

† NORMAL TO END BENT

SECTION THRU SLAB

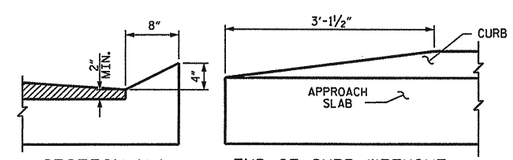

SECTION N-N

END OF CURB WITHOUT SHOULDER BERM GUTTER

CURB DETAILS

SPLICE LENGTHS		
BAR SIZE	EPOXY COATED	UNCOATED
#4	2'-0"	1'-9"
#5	2'-6"	2'-2"
#6	3'-10"	2'-7"

NORTH CAROLINA PROFESSIONAL SEAL 14045 ENGINEER TIMOTHY L. COGGINS

06/03/13

PROJECT NO. BD-5104L

NASH COUNTY

STATION: 25+45.00 -L-

STATE OF NORTH CAROLINA
DEPARTMENT OF TRANSPORTATION
RALEIGH

STANDARD
BRIDGE APPROACH SLAB
FOR PRESTRESSED CONCRETE
CORED SLAB UNIT
(SUB-REGIONAL TIER)
90° SKEW

REVISIONS								SHEET NO.
NO.	BY:	DATE:	NO.	BY:	DATE:			57
1			3					TOTAL SHEETS
2			4					63

ASSEMBLED BY : REZA KOUCHEKI DATE : 5/08/13
CHECKED BY : M.M. AHMED DATE : 5/08/13
DRAWN BY : SHS/MAA 5-09
CHECKED BY : BCH 5-09
REV. 12-11 MAA/AAC

04-JUN-2013 09:18
S:\DPG\T\Tim\Division 4 LIBR\BD-5104L\gkoucheki\BD5104L_PLANS.dgn
†coggins

STD. NO. BAS_33_90S

STANDARD NOTES

DESIGN DATA:

SPECIFICATIONS	A.A.S.H.T.O. (CURRENT)
LIVE LOAD	SEE PLANS
IMPACT ALLOWANCE	SEE A.A.S.H.T.O.
STRESS IN EXTREME FIBER OF	
STRUCTURAL STEEL - AASHTO M270 GRADE 36	20,000 LBS. PER SQ. IN.
- AASHTO M270 GRADE 50W	27,000 LBS. PER SQ. IN.
- AASHTO M270 GRADE 50	27,000 LBS. PER SQ. IN.
REINFORCING STEEL IN TENSION	
GRADE 60	24,000 LBS. PER SQ. IN.
CONCRETE IN COMPRESSION	1,200 LBS. PER SQ. IN.
CONCRETE IN SHEAR	SEE A.A.S.H.T.O.
STRUCTURAL TIMBER - TREATED OR	
UNTREATED - EXTREME FIBER STRESS	1,800 LBS. PER SQ. IN.
COMPRESSION PERPENDICULAR TO GRAIN OF TIMBER	375 LBS. PER SQ. IN.
EQUIVALENT FLUID PRESSURE OF EARTH	30 LBS. PER CU. FT. (MINIMUM)

MATERIAL AND WORKMANSHIP:

EXCEPT AS MAY OTHERWISE BE SPECIFIED ON PLANS OR IN THE SPECIAL PROVISIONS, ALL MATERIAL AND WORKMANSHIP SHALL BE IN ACCORDANCE WITH THE 2012 "STANDARD SPECIFICATIONS FOR ROADS AND STRUCTURES" OF THE N. C. DEPARTMENT OF TRANSPORTATION.

STEEL SHEET PILING FOR PERMANENT OR TEMPORARY APPLICATIONS SHALL BE HOT ROLLED.

CONCRETE:

UNLESS OTHERWISE REQUIRED ON PLANS, CLASS A CONCRETE SHALL BE USED FOR ALL PORTIONS OF ALL STRUCTURES WITH THE EXCEPTION THAT: CLASS AA CONCRETE SHALL BE USED IN BRIDGE SUPERSTRUCTURES, ABUTMENT BACKWALLS, AND APPROACH SLABS; AND CLASS B CONCRETE SHALL BE USED FOR SLOPE PROTECTION AND RIP RAP.

CONCRETE CHAMFERS:

UNLESS OTHERWISE NOTED ON THE PLANS, ALL EXPOSED CORNERS ON STRUCTURES SHALL BE CHAMFERED 3/4" WITH THE FOLLOWING EXCEPTIONS: TOP CORNERS OF CURBS MAY BE ROUNDED TO 1-1/2" RADIUS WHICH IS BUILT INTO CURB FORMS; CORNERS OF TRANSVERSE FLOOR EXPANSION JOINTS SHALL BE ROUNDED WITH A 1/4" FINISHING TOOL UNLESS OTHERWISE REQUIRED ON PLANS; AND CORNERS OF EXPANSION JOINTS IN THE ROADWAY FACES AND TOPS OF CURBS AND SIDEWALKS SHALL BE ROUNDED TO A 1/4" RADIUS WITH A FINISHING STONE OR TOOL UNLESS OTHERWISE REQUIRED ON PLANS.

DOWELS:

DOWELS WHEN INDICATED ON PLANS AS FOR CULVERT EXTENSIONS, SHALL BE EMBEDDED AT LEAST 12" INTO THE OLD CONCRETE AND GROUTED INTO PLACE WITH 1:2 CEMENT MORTAR.

ALLOWANCE FOR DEAD LOAD DEFLECTION, SETTLEMENT, ETC. IN CASTING SUPERSTRUCTURES:

BRIDGES SHALL BE BUILT ON THE GRADE OR VERTICAL CURVE SHOWN ON PLANS. SLABS, CURBS AND PARAPETS SHALL CONFORM TO THE GRADE OR CURVE.

ALL DIMENSIONS WHICH ARE GIVEN IN SECTION AND ARE AFFECTED BY DEAD LOAD DEFLECTIONS ARE DIMENSIONS AT CENTER LINE OF BEARING UNLESS OTHERWISE NOTED ON PLANS. IN SETTING FORMS FOR STEEL BEAM BRIDGES AND PRESTRESSED CONCRETE GIRDER BRIDGES, ADJUSTMENTS SHALL BE MADE DUE TO THE DEAD LOAD DEFLECTIONS FOR THE ELEVATIONS SHOWN. WHERE BLOCKS ARE SHOWN OVER BEAMS FOR BUILDING UP TO THE SLAB, THE VERTICAL DIMENSIONS OF THE BLOCKS SHALL BE ADJUSTED BETWEEN BEARINGS TO COMPENSATE FOR DEAD LOAD DEFLECTIONS, VERTICAL CURVE ORDINATE, AND ACTUAL BEAM CAMBER. WHERE BOTTOM OF SLAB IS IN LINE WITH BOTTOM OF TOP FLANGES, DEPTH OF SLAB BETWEEN BEARINGS SHALL BE ADJUSTED TO COMPENSATE FOR DEAD LOAD DEFLECTION, VERTICAL CURVE ORDINATE, AND ACTUAL BEAM CAMBER.

IN SETTING FALSEWORK AND FORMS FOR REINFORCED CONCRETE SPANS, AN ALLOWANCE SHALL BE MADE FOR DEAD LOAD DEFLECTIONS, SETTLEMENT OF FALSEWORK, AND PERMANENT CAMBER WHICH SHALL BE PROVIDED FOR IN ADDITION TO THE ELEVATIONS SHOWN. AFTER REMOVAL OF THE FALSEWORK, THE FINISHED STRUCTURES SHALL CONFORM TO THE PROFILE AND ELEVATIONS SHOWN ON THE PLANS AND CONSTRUCTION ELEVATIONS FURNISHED BY THE ENGINEER.

DETAILED DRAWINGS FOR FALSEWORK OR FORMS FOR BRIDGE SUPERSTRUCTURE AND ANY STRUCTURE OR PARTS OF A STRUCTURE AS NOTED ON THE PLANS SHALL BE SUBMITTED TO THE ENGINEER FOR APPROVAL BEFORE CONSTRUCTION OF THE FALSEWORK OR FORMS IS STARTED.

REINFORCING STEEL:

ALL REINFORCING STEEL SHALL BE DEFORMED. DIMENSIONS RELATIVE TO PLACEMENT OF REINFORCING ARE TO CENTERS OF BARS UNLESS OTHERWISE INDICATED IN THE PLANS. DIMENSIONS ON BAR DETAILS ARE TO CENTERS OF BARS OR ARE OUT TO OUT AS INDICATED ON PLANS.

WIRE BAR SUPPORTS SHALL BE PROVIDED FOR REINFORCING STEEL WHERE INDICATED ON THE PLANS. WHEN BAR SUPPORT PIECES ARE PLACED IN CONTINUOUS LINES, THEY SHALL BE SO PLACED THAT THE ENDS OF THE SUPPORTING WIRES SHALL BE LAPPED TO LOCK LEGS ON ADJOINING PIECES.

STRUCTURAL STEEL:

AT THE CONTRACTOR'S OPTION, HE MAY SUBSTITUTE 7/8" Ø SHEAR STUDS FOR THE ¾" Ø STUDS SPECIFIED ON THE PLANS. THIS SUBSTITUTION SHALL BE MADE AT THE RATE OF 3 - 7/8" Ø STUDS FOR 4 - 3/4" Ø STUDS, AND STUD SPACING CHANGES SHALL BE MADE AS NECESSARY TO PROVIDE THE SAME EQUIVALENT NUMBER OF 7/8" Ø STUDS ALONG THE BEAM AS SHOWN FOR 3/4" Ø STUDS BASED ON THE RATIO OF 3 - 7/8" Ø STUDS FOR 4 - 3/4" Ø STUDS. STUDS OF THE LENGTH SPECIFIED ON THE PLANS MUST BE PROVIDED. THE MAXIMUM SPACING SHALL BE 2'-0".

EXCEPT AT THE INTERIOR SUPPORTS OF CONTINUOUS BEAMS WHERE THE COVER PLATE IS IN CONTACT WITH BEARING PLATE, THE CONTRACTOR MAY, AT HIS OPTION, SUBSTITUTE FOR THE COVER PLATES DESIGNATED ON THE PLANS COVER PLATES OF THE EQUIVALENT AREA PROVIDED THESE PLATES ARE AT LEAST 5/16" IN THICKNESS AND DO NOT EXCEED A WIDTH EQUAL TO THE FLANGE WIDTH LESS 2" OR A THICKNESS EQUAL TO 2 TIMES THE FLANGE THICKNESS. THE SIZE OF FILLET WELDS SHALL CONFORM TO THE REQUIREMENTS OF THE CURRENT ANSI/AASHTO/AWS "BRIDGE WELDING CODE". ELECTROSLAG WELDING WILL NOT BE PERMITTED.

WITH THE SOLE EXCEPTION OF EDGES AT SURFACES WHICH BEAR ON OTHER SURFACES, ALL SHARP EDGES AND ENDS OF SHAPES AND PLATES SHALL BE SLIGHTLY ROUNDED BY SUITABLE MEANS TO A RADIUS OF APPROXIMATELY 1/16 INCH OR EQUIVALENT FLAT SURFACE AT A SUITABLE ANGLE PRIOR TO PAINTING, GALVANIZING, OR METALLIZING.

HANDRAILS AND POSTS:

METAL STANDARDS AND FACES OF THE CONCRETE END POSTS FOR THE METAL RAIL SHALL BE SET NORMAL TO THE GRADE OF THE CURB, UNLESS OTHERWISE SHOWN ON PLANS. THE METAL RAIL AND TOPS OF CONCRETE POSTS USED WITH THE ALUMINUM RAIL SHALL BE BUILT PARALLEL TO THE GRADE OF THE CURB.

METAL HANDRAILS SHALL BE IN ACCORDANCE WITH THE PLANS. RAILS SHALL BE AS MANUFACTURED FOR BRIDGE RAILING. CASTINGS SHALL BE OF A UNIFORM APPEARANCE. FINS AND OTHER DEFORMATIONS RESULTING FROM CASTING OR OTHERWISE SHALL BE REMOVED IN A MANNER SO THAT A UNIFORM COLORING OF THE COMPLETED CASTING SHALL BE OBTAINED. CASTINGS WITH DISCOLORATIONS OR OF NON-UNIFORM COLORING WILL NOT BE ACCEPTED. CERTIFIED MILL REPORTS ARE REQUIRED FOR METAL RAILS AND POSTS.

SPECIAL NOTES:

GENERALLY, IN CASE OF DISCREPANCY, THIS STANDARD SHEET OF NOTES SHALL GOVERN OVER THE SPECIFICATIONS, BUT THE REMAINDER OF THE PLANS SHALL GOVERN OVER NOTES HEREON, AND SPECIAL PROVISIONS SHALL GOVERN OVER ALL. SEE SPECIFICATIONS ARTICLE 105-4.

ENGLISH
JANUARY, 1990

SHEET NO. 58
TOTAL SHEETS 63

STD. NO. SN

REV. 6-16-95 EEM (✓) RGW REV. 5-7-03 RWW (✓) JTE REV. 10-1-11 MAA (✓) GM
REV. 8-16-99 RWW (✓) LES REV. 5-1-06 TLA (✓) GM

7/2/2013 1:33:01 PM R:\Structures\BD5904L_SD_SN_01.dgn

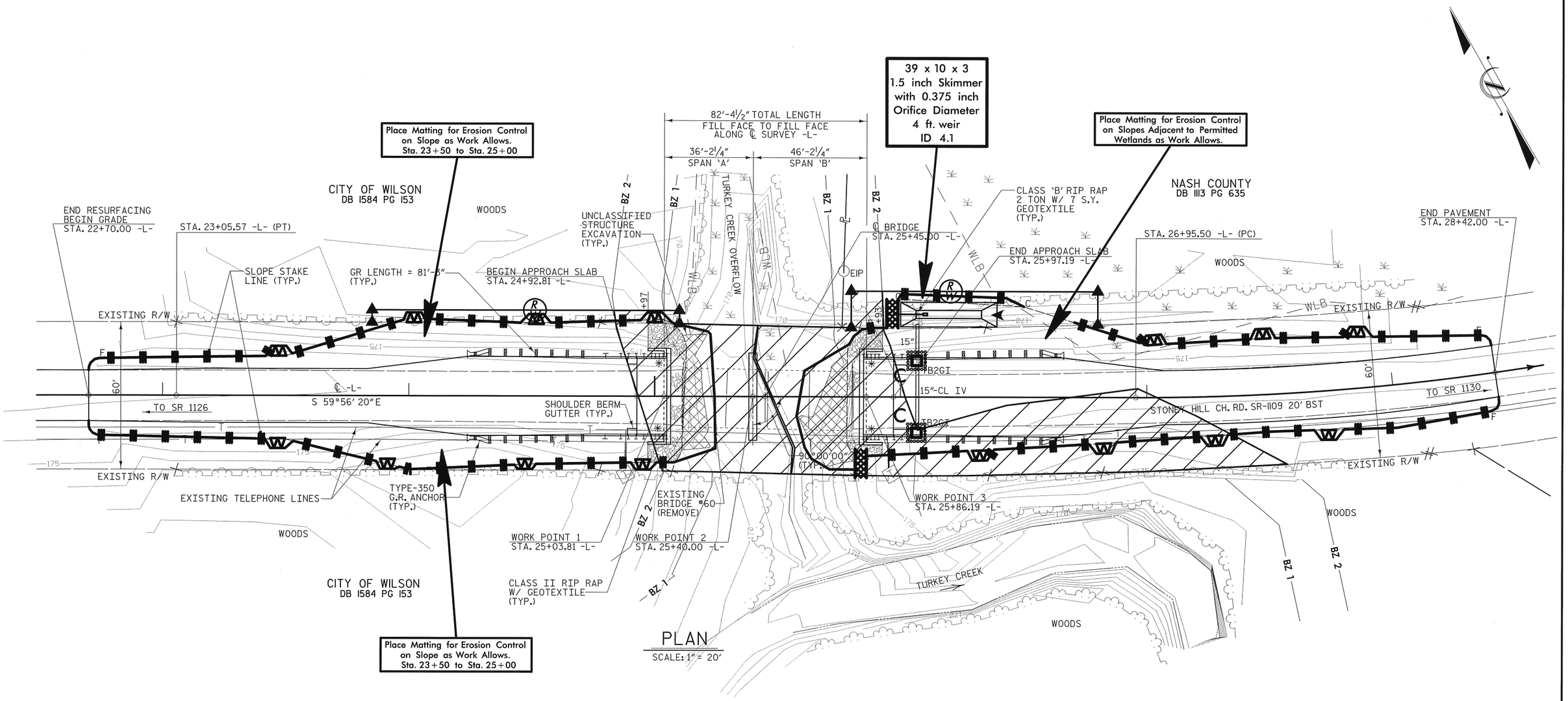

Place Matting for Erosion Control on Slope as Work Allows. Sta. 23+50 to Sta. 25+00

NOTE:
UTILIZE SKIMMER BASIN OR SPECIAL STILLING BASIN(S) AS STILLING BASIN WHERE APPLICABLE.

NOTES: ANY DEVIATION FROM OPTIONS GIVEN WILL REQUIRE PRIOR APPROVAL BY ENGINEER.

ADDITIONAL EROSION CONTROL DEVICES MAY NEED TO BE INSTALLED AS DIRECTED BY THE ENGINEER.

ROADSIDE ENVIRONMENTAL UNIT
DEPARTMENT OF TRANSPORTATION
DIVISION OF HIGHWAYS
RALEIGH, N.C.

2012 STANDARD SPECIFICATIONS

ENVIRONMENTALLY SENSITIVE AREA
SEE PROJECT SPECIAL PROVISIONS

Std. #	Description	Symbol
1605.01	Temporary Silt Fence	
1606.01	Special Sediment Control Fence	
1622.01	Temporary Berms and Slope Drains	
1630.06	Special Stilling Basin	
1632.03	Rock Inlet Sediment Trap Type C	
1633.01	Temporary Rock Silt Check Type-A	
1633.02	Temporary Rock Silt Check Type-B	
	Wattle / Coir Fiber Wattle	EW / CFW
	Skimmer Basin	

THESE EROSION AND SEDIMENT CONTROL PLANS COMPLY WITH THE REGULATIONS SET FORTH BY THE NCG-010000 GENERAL CONSTRUCTION PERMIT EFFECTIVE AUGUST 3, 2011 ISSUED BY THE NORTH CAROLINA DEPARTMENT OF ENVIRONMENT AND NATURAL RESOURCES DIVISION OF WATER QUALITY.

2012 STANDARD DRAWINGS

1604.01	Railroad Erosion Control Detail	1632.01	Rock Inlet Sediment Trap Type A
1605.01	Temporary Silt Fence	1632.02	Rock Inlet Sediment Trap Type B
1606.01	Special Sediment Control Fence	1632.03	Rock Inlet Sediment Trap Type C
1607.01	Gravel Construction Entrance	1633.01	Temporary Rock Silt Check Type A
1622.01	Temporary Berms and Slope Drains	1633.02	Temporary Rock Silt Check Type B
1630.01	Riser Basin	1634.01	Temporary Rock Sediment Dam Type A
1630.02	Silt Basin Type B	1634.02	Temporary Rock Sediment Dam Type B
1630.03	Temporary Silt Ditch	1635.01	Rock Pipe Inlet Sediment Trap Type A
1630.04	Stilling Basin	1635.02	Rock Pipe Inlet Sediment Trap Type B
1630.05	Temporary Diversion	1640.01	Coir Fiber Baffle
1630.06	Special Stilling Basin	1645.01	Temporary Stream Crossing
1631.01	Matting Installation		

PROJECT NO. BD-5104L
NASH COUNTY
STATION: 25+45.00 -L-

REPLACES BRIDGE NO. 60

STATE OF NORTH CAROLINA
DEPARTMENT OF TRANSPORTATION
RALEIGH

BRIDGE ON SR 1109
OVER TURKEY CREEK OVERFLOW
BETWEEN SR 1126 & SR 1130

30'-10" CLEAR ROADWAY - 90° SKEW

REVISIONS						SHEET NO.
NO.	BY:	DATE:	NO.	BY:	DATE:	59
1			3			TOTAL SHEETS
2			4			63

7/2/2013 1:34:03 PM R:\Structures\Erosion Control\BD5104L_SD_EC_01.dgn

SKIMMER BASIN WITH BAFFLES DETAIL

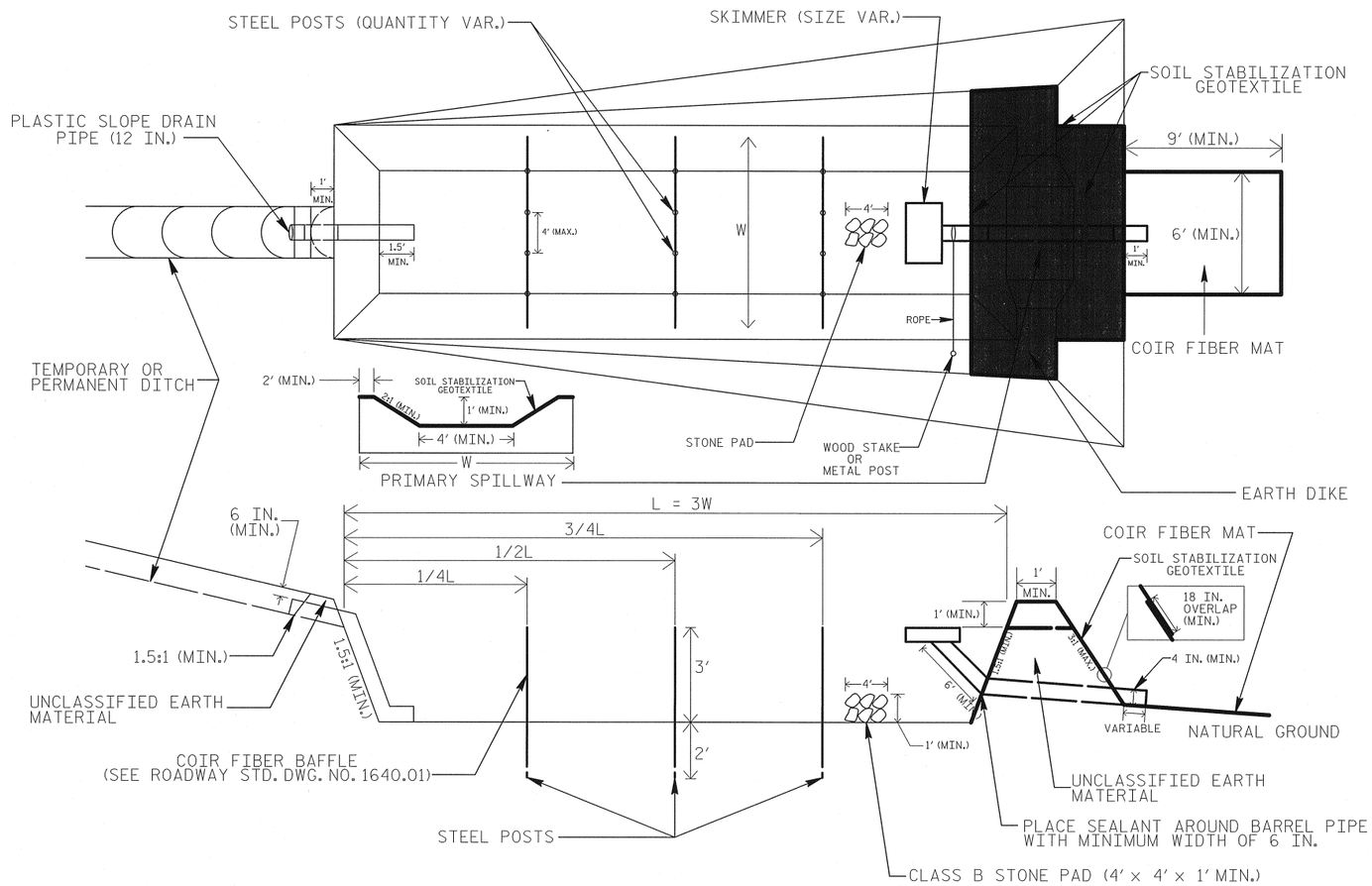

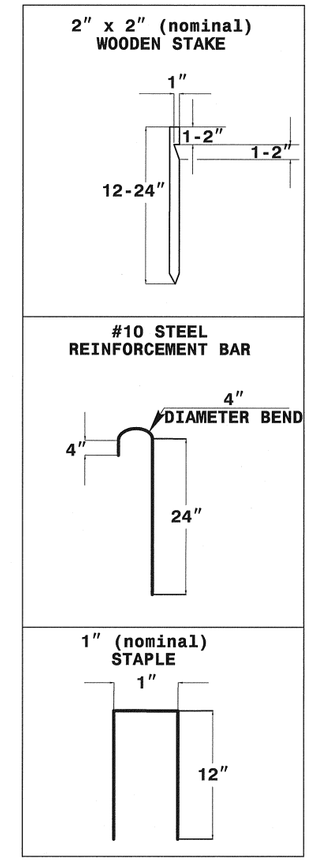

COIR FIBER MAT ANCHOR OPTIONS

NOTES

1. SEED AND PLACE MATTING FOR EROSION CONTROL ON INTERIOR AND EXTERIOR SIDESLOPES.
2. LIMIT EARTH DIKE HEIGHT TO 5 FT.
3. FOR BASIN DEPTH OF 3 FT., THE MINIMUM BASIN WIDTH SHALL BE 9 FT.
4. DETERMINE PRIMARY SPILLWAY WEIR LENGTH (FT.) USING Q/0.4, WHERE Q IS FLOW RATE (CFS) INTO BASIN.
5. PLASTIC SLOPE DRAIN PIPE AT INLET OF BASIN MAY BE REPLACED BY FILTRATION GEOTEXTILE OR TARP AS DIRECTED.
6. SOIL STABILIZATION GEOTEXTILE FOR PRIMARY SPILLWAY SHALL BE ONE CONTINUOUS PIECE OF MATERIAL OR OVERLAPPED 18 IN. (MIN.).

NOT TO SCALE

PROJECT NO. BD-5104L

NASH COUNTY

STATION: 25+45.00 -L-

REPLACES BRIDGE NO. 60

STATE OF NORTH CAROLINA
DEPARTMENT OF TRANSPORTATION
RALEIGH

BRIDGE ON SR 1109
OVER TURKEY CREEK OVERFLOW
BETWEEN SR 1126 & SR 1130

30'-10" CLEAR ROADWAY - 90° SKEW

REVISIONS						SHEET NO.
NO.	BY:	DATE:	NO.	BY:	DATE:	60
1			3			TOTAL SHEETS
2			4			63

ROADSIDE ENVIRONMENTAL UNIT
DEPARTMENT OF TRANSPORTATION
DIVISION OF HIGHWAYS
RALEIGH, N.C.

2012 STANDARD SPECIFICATIONS

NOTES: ANY DEVIATION FROM OPTIONS GIVEN WILL REQUIRE PRIOR APPROVAL BY ENGINEER.

ADDITIONAL EROSION CONTROL DEVICES MAY NEED TO BE INSTALLED AS DIRECTED BY THE ENGINEER.

7/2/2013 4:33:55 PM R:\Structures\Erosion Control\BD5104L_SD_EC_01.dgn

WATTLE BARRIER DETAIL

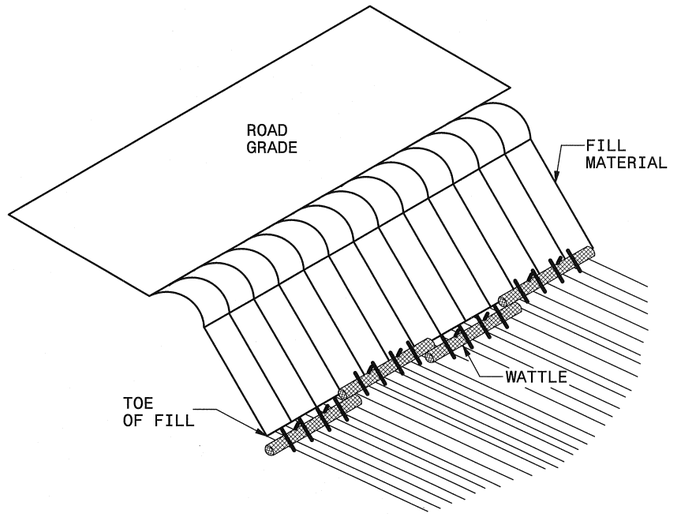

ISOMETRIC VIEW

NOTES:

USE MINIMUM 18 IN. NOMINAL DIAMETER EXCELSIOR WATTLE AND LENGTH OF 10 FT.

EXCAVATE A 2 TO 3 INCH TRENCH FOR WATTLE TO BE PLACED.

DO NOT PLACE WATTLES ON TOE OF SLOPE.

USE 2 FT. WOODEN STAKES WITH A 2 IN. BY 2 IN. NOMINAL CROSS SECTION.

INSTALL A MINIMUM OF 2 UPSLOPE STAKES AND 4 DOWNSLOPE STAKES AT AN ANGLE TO WEDGE WATTLE TO GROUND.

PROVIDE STAPLES MADE OF 0.125 IN. DIAMETER STEEL WIRE FORMED INTO A U SHAPE NOT LESS THAN 12″ IN LENGTH.

INSTALL STAPLES APPROXIMATELY EVERY 1 LINEAR FOOT ON BOTH SIDES OF WATTLE AND AT EACH END TO SECURE IT TO THE SOIL.

FOR BREAKS ALONG LARGE SLOPES, USE MAXIMUM SPACING OF 20 FT.

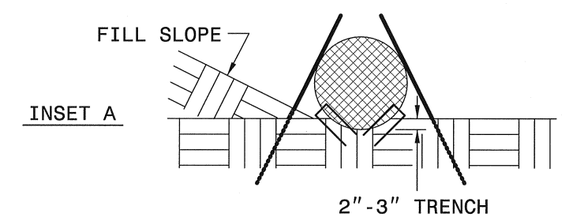

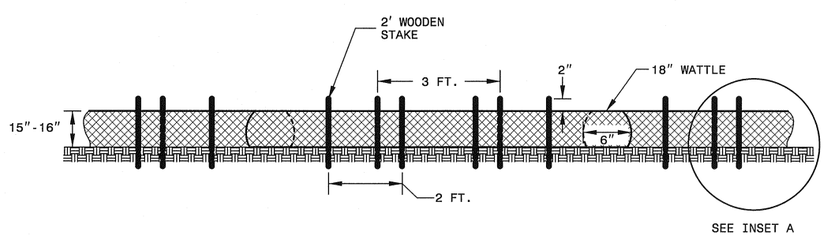

FRONT VIEW

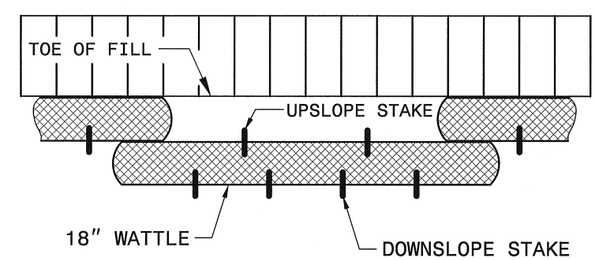

TOP VIEW

PROJECT NO. BD-5104L

NASH COUNTY

STATION: 25+45.00 -L-

REPLACES BRIDGE NO. 60

STATE OF NORTH CAROLINA
DEPARTMENT OF TRANSPORTATION
RALEIGH

BRIDGE ON SR 1109
OVER TURKEY CREEK OVERFLOW
BETWEEN SR 1126 & SR 1130

30′-10″ CLEAR ROADWAY - 90° SKEW

REVISIONS						SHEET NO.
NO.	BY:	DATE:	NO.	BY:	DATE:	61
1			3			TOTAL SHEETS
2			4			63

ROADSIDE ENVIRONMENTAL UNIT
DEPARTMENT OF TRANSPORTATION
DIVISION OF HIGHWAYS
RALEIGH, N.C.

2012 STANDARD SPECIFICATIONS

NOTES: ANY DEVIATION FROM OPTIONS GIVEN WILL REQUIRE PRIOR APPROVAL BY ENGINEER.

ADDITIONAL EROSION CONTROL DEVICES MAY NEED TO BE INSTALLED AS DIRECTED BY THE ENGINEER.

7/2/2013 4:33:47 PM R:\Structures\Erosion Control\BD5104L_SD_EC_01.dgn

DIVISION OF HIGHWAYS
STATE OF NORTH CAROLINA

SOIL STABILIZATION TIMEFRAMES

SITE DESCRIPTION	STABILIZATION TIME	TIMEFRAME EXCEPTIONS
PERIMETER DIKES, SWALES, DITCHES AND SLOPES	7 DAYS	NONE
HIGH QUALITY WATER (HQW) ZONES	7 DAYS	NONE
SLOPES STEEPER THAN 3:1	7 DAYS	IF SLOPES ARE 10' OR LESS IN LENGTH AND ARE NOT STEEPER THAN 2:1, 14 DAYS ARE ALLOWED.
SLOPES 3:1 OR FLATTER	14 DAYS	7 DAYS FOR SLOPES GREATER THAN 50' IN LENGTH.
ALL OTHER AREAS WITH SLOPES FLATTER THAN 4:1	14 DAYS	NONE, EXCEPT FOR PERIMETERS AND HQW ZONES.

NOTES: ANY DEVIATION FROM OPTIONS GIVEN WILL REQUIRE PRIOR APPROVAL BY ENGINEER.

ADDITIONAL EROSION CONTROL DEVICES MAY NEED TO BE INSTALLED AS DIRECTED BY THE ENGINEER.

ROADSIDE ENVIRONMENTAL UNIT
DEPARTMENT OF TRANSPORTATION
DIVISION OF HIGHWAYS
RALEIGH, N.C.

2012 STANDARD SPECIFICATIONS

PROJECT NO. BD-5104L
NASH COUNTY
STATION: 25+45.00 -L-

REPLACES BRIDGE NO. 60

STATE OF NORTH CAROLINA
DEPARTMENT OF TRANSPORTATION
RALEIGH

BRIDGE ON SR 1109
OVER TURKEY CREEK OVERFLOW
BETWEEN SR 1126 & SR 1130

30'-10" CLEAR ROADWAY - 90° SKEW

REVISIONS						SHEET NO.
NO.	BY:	DATE:	NO.	BY:	DATE:	62
1			3			TOTAL SHEETS
2			4			63

7/2/2013 1:33:40 PM R:\Structures\Erosion Control\BD5104L_SD_EC_01.dgn

STATE	STATE PROJECT REFERENCE NO.	SHEET NO.	TOTAL SHEETS
N.C.	BD-5104L	63	63

STATE PROJ. NO.	F. A. PROJ. NO.	DESCRIPTION

PLANTING DETAILS

SEEDLING / LINER BAREROOT PLANTING DETAIL

HEALING IN

1. Locate a healing-in site in a shady, well protected area.
2. Excavate a flat bottom trench 12 inches deep and provide drainage.

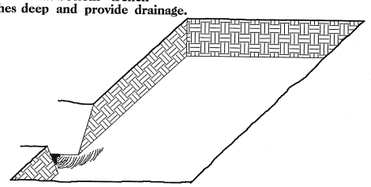

3. Backfill the trench with 2 inches well rotted sawdust. Place a 2 inch layer of well rotted sawdust at a sloping angle at one end of the trench.

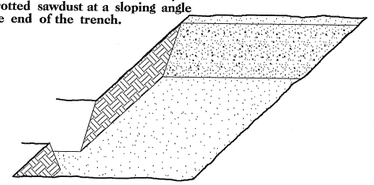

4. Place a single layer of plants against the sloping end so that the root collar is at ground level.

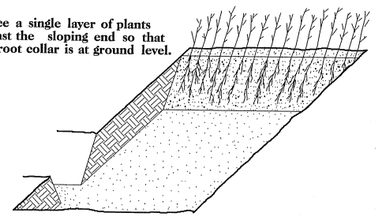

5. Place a 2 inch layer of well rotted sawdust over the roots maintaining a sloping angle.

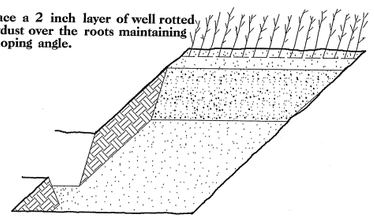

6. Repeat layers of plants and sawdust as necessary and water thoroughly.

DIBBLE PLANTING METHOD
USING THE KBC PLANTING BAR

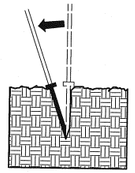

1. Insert planting bar as shown and pull handle toward planter.

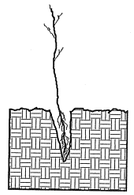

2. Remove planting bar and place seedling at correct depth.

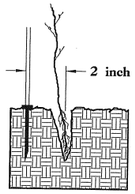

3. Insert planting bar 2 inches toward planter from seedling.

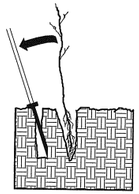

4. Pull handle of bar toward planter, firming soil at bottom.

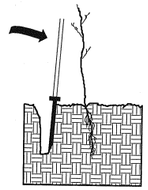

5. Push handle forward firming soil at top.

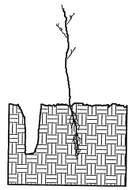

6. Leave compaction hole open. Water thoroughly.

PLANTING NOTES:

PLANTING BAG
During planting, seedlings shall be kept in a moist canvas bag or similar container to prevent the root systems from drying.

KBC PLANTING BAR
Planting bar shall have a blade with a triangular cross section, and shall be 12 inches long, 4 inches wide and 1 inch thick at center.

ROOT PRUNING
All seedlings shall be root pruned, if necessary, so that no roots extend more than 10 inches below the root collar.

REFORESTATION

☐ TREE REFORESTATION SHALL BE PLANTED 6 FT. TO 10 FT. ON CENTER, RANDOM SPACING, AVERAGING 8 FT. ON CENTER, APPROXIMATELY 680 PLANTS PER ACRE.

REFORESTATION

MIXTURE, TYPE, SIZE, AND FURNISH SHALL CONFORM TO THE FOLLOWING:

34% LIRIODENDRON TULIPIFERA	TULIP POPLAR	12 in - 18 in BR
33% PLATANUS OCCIDENTALIS	SYCAMORE	12 in - 18 in BR
33% FRAXINUS PENNSYLVANICA	GREEN ASH	12 in - 18 in BR

ROADSIDE ENVIRONMENTAL UNIT
DEPARTMENT OF TRANSPORTATION
DIVISION OF HIGHWAYS
RALEIGH, N.C.

2012 STANDARD SPECIFICATIONS

NOTES: ANY DEVIATION FROM OPTIONS GIVEN WILL REQUIRE PRIOR APPROVAL BY ENGINEER.

ADDITIONAL EROSION CONTROL DEVICES MAY NEED TO BE INSTALLED AS DIRECTED BY THE ENGINEER.

REFORESTATION DETAIL SHEET

N.C.D.O.T. - ROADSIDE ENVIRONMENTAL UNIT

7/2/2013 1:33:33 PM R:\Structures\Erosion Control\BD5104L_SD_EC_01.dgn