STATE OF NORTH CAROLINA

DEPARTMENT OF TRANSPORTATION

DIVISION FOUR

CONTRACT PROPOSAL

DATE AND TIME OF BID OPENING: NOVEMBER 26, 2013 at 2:00 PM

CONTRACT ID	**DD00106**
WBS	**45350.3.FD12, 45350.3.FD13**
FED. AID NO.	**BRZ-1109(10), BRZ-1109(11)**
COUNTY	**NASH**
T.I.P. NO.	**BD-5104K, BD-5104L**
MILES	**0.114, 0.108**
ROUTE NO.	**SR 1109 (STONEY HILL CHURCH ROAD)**
LOCATION	**BRIDGE NO. 59 OVER TURKEY CREEK**
	BRIDGE NO. 60 OVER TURKEY CREEK OVERFLOW

TYPE OF WORK GRADING, DRAINAGE, PAVING, AND STRUCTURE

NOTICE:

ALL BIDDERS SHALL COMPLY WITH ALL APPLICABLE LAWS REGULATING THE PRACTICE OF GENERAL CONTRACTING AS CONTAINED IN CHAPTER 87 OF THE GENERAL STATUTES OF NORTH CAROLINA WHICH REQUIRES THE BIDDER TO BE LICENSED BY THE N.C. LICENSING BOARD FOR CONTRACTORS WHEN BIDDING ON ANY NON-FEDERAL AID PROJECT WHERE THE BID IS $30,000 OR MORE, EXCEPT FOR CERTAIN SPECIALTY WORK AS DETERMINED BY THE LICENSING BOARD. BIDDERS SHALL ALSO COMPLY WITH ALL OTHER APPLICABLE LAWS REGULATING THE PRACTICES OF ELECTRICAL, PLUMBING, HEATING AND AIR CONDITIONING AND REFRIGERATION CONTRACTING AS CONTAINED IN CHAPTER 87 OF THE GENERAL STATUTES OF NORTH CAROLINA. NOT WITHSTANDING THESE LIMITATIONS ON BIDDING, THE BIDDER WHO IS AWARDED ANY PROJECT SHALL COMPLY WITH CHAPTER 87 OF THE GENERAL STATUTES OF NORTH CAROLINA FOR LICENSING REQUIREMENTS WITHIN 60 CALENDAR DAYS OF BID OPENING, REGARDLESS OF FUNDING SOURCES

_____

NAME OF BIDDER

_____

ADDRESS OF BIDDER

This page left intentionally blank.

PROPOSAL FOR THE CONSTRUCTION OF

CONTRACT NO. DD00106 IN NASH COUNTY
NORTH CAROLINA

NOVEMBER 26, 2013

DEPARTMENT OF TRANSPORTATION,

WILSON, NORTH CAROLINA

The Bidder has carefully examined the location of the proposed work to be known as Contract DD00106; has carefully examined the plans and specifications, which are acknowledged to be part of the proposal, the special provisions, the proposal, the form of contract, and the forms of contract payment bond and contract performance bond; and thoroughly understands the stipulations, requirements and provisions. The undersigned Bidder agrees to bound upon his execution of the bid and subsequent award to him by the Division Four Engineer in accordance with this proposal to provide the necessary contract payment bond and contract performance bond within fourteen days after the written notice requesting these bonds is received by him. The undersigned Bidder further agrees to provide all necessary machinery, tools, labor, and other means of construction; and to do all the work and to furnish all materials, except as otherwise noted, necessary to perform and complete the said contract in accordance with the 2012 Standard Specifications for Roads and Structures by the dates(s) specified in the Project Special Provisions and in accordance with the requirements of the Engineer, and at the unit or lump sum prices, as the case may be, for the various items given on the sheets contained herein.

The Bidder shall provide and furnish all the materials, machinery, implements, appliances and tools, and perform the work and required labor to construct and complete Contract DD00106 in Nash County, for the unit or lump sum prices, as the case may be, bid by the Bidder in his bid and according to the proposal, plans, and specifications prepared by said Department, which proposal, plans, and specifications show the details covering this project, and hereby become a part of this contract.

The published volume entitled "North Carolina Department of Transportation, Raleigh, Standard Specifications for Roads and Structures, January 2012 with all amendments and supplements thereto, is by reference incorporated into and made a part of this contract; that, except as herein modified, all the construction and work included in this contract is to be done in accordance with the specifications contained in said volume, and amendments and supplements thereto, under the direction of the Engineer.

If the proposal is accepted and the award is made, the contract is valid only when signed either by the Division Engineer or such other person as may be designated by the Secretary to sign for the Department of Transportation. The conditions and provisions herein cannot be changed except over the signature of the said Division Engineer.

The quantities shown in the itemized proposal for the project are considered to be approximate only and are given as the basis for comparison of bids. The Department of Transportation may increase or decrease the quantity of any item or portion of the work as may be deemed necessary or expedient.

An increase or decrease in the quantity of any item will not be regarded as sufficient ground for an increase or decrease in the unit prices, nor in the time allowed for the completion of the work, except as provided for the contract.

This page left intentionally blank.

TABLE OF CONTENTS

COVER SHEET

PROPOSAL SHEETS

PROJECT SPECIAL PROVISIONS

REQUIRED PRECONSTRUCTION MEETING: 7
CONTRACT TIME AND LIQUIDATED DAMAGES: 7
STRUCTURE CONSTRUCTION: 7
FUEL PRICE ADJUSTMENT: 8
DISADVANTAGED BUSINESS ENTERPRISE (DIVISIONS): 8
CERTIFICATION FOR FEDERAL-AID CONTRACTS: 21
U.S. DEPARTMENT OF TRANSPORTATION HOTLINE: 22
SUBMISSION OF RECORDS - FEDERAL-AID PROJECTS: 22
SUBSURFACE INFORMATION: 22
LOCATING EXISTING UNDERGROUND UTILITIES: 22
DOMESTIC STEEL: 23
COOPERATION BETWEEN CONTRACTORS: 23
TWELVE MONTH GUARANTEE: 23
OUTSOURCING OUTSIDE THE USA: 24
GIFTS FROM VENDORS AND CONTRACTORS: 24
EROSION AND SEDIMENT CONTROL/STORMWATER CERTIFICATION: 25
EMPLOYMENT: 30
STATE HIGHWAY ADMINISTRATOR TITLE CHANGE: 30
ROADWAY 31
TRAFFIC CONTROL AND WORK ZONE SAFETY 45
EROSION CONTROL – LIBR PROJECTS (DIV. 4) 46
STRUCTURE 67

PROJECT COMMITMENTS AND PERMITS

STANDARD SPECIAL PROVISIONS

AVAILABILITY OF FUNDS – TERMINATION OF CONTRACTS 159
NCDOT GENERAL SEED SPECIFICATION FOR SEED QUALITY 160
ERRATA 163
PLANT AND PEST QUARANTINES 165
AWARD OF CONTRACT 166
MINORITY AND FEMALE EMPLOYMENT REQUIREMENTS 167
REQUIRED CONTRACT PROVISIONS FEDERAL - AID CONSTRUCTION CONTRACTS 170
ON-THE-JOB TRAINING 179

PROPOSAL ITEM SHEET(S)

SIGNATURE SHEET

LISTING OF DBE SUBCONTRACTORS

This page left intentionally blank.

Project Special Provisions

REQUIRED PRECONSTRUCTION MEETING:

The Contractor shall attend the required pre-construction meeting on Thursday January 9, 2014 at 3:00 P.M. in the Division Four Conference Room located in Wilson, NC.

The proposed progress schedule must be submitted to the Division Construction Engineer seven (**7**) days prior to the date of the preconstruction meeting. At the preconstruction meeting the Contractor shall supply the following information:

- Name of persons authorized to sign Supplemental Agreements
- Name of the EEO Officer and Minority Liaison Officer
- Name of the Erosion Control and Sediment Control/Storm Water Certified Supervisor, Certified Foreman, Certified Installer, and Certified Designer
- Name of the Work Zone Traffic Control Supervisor
- Buy America Certification

CONTRACT TIME AND LIQUIDATED DAMAGES:

(7-1-95) (Rev.12-18-07) SP1 G05A

The date of availability for this contract is **January 13, 2014**.

The completion date for this contract is the date that is **One Hundred Eighty (180)** consecutive calendar days after and including the date of availability.

Except where otherwise provided by the contract, observation periods required by the contract will not be a part of the work to be completed by the completion date and/or intermediate contract times stated in the contract. The acceptable completion of the observation periods that extend beyond the final completion date shall be a part of the work covered by the performance and payment bonds.

The liquidated damages for this contract are **Five Hundred Dollars ($500.00)** per calendar day. At the preconstruction conference the Contractor shall declare his expected date for beginning work. Should the Contractor desire to revise this date after the preconstruction conference, he shall notify the Engineer in writing at least thirty (30) days prior to the revised date.

STRUCTURE CONSTRUCTION:

This structure is intended to be constructed top down.

Alternate means of access to construct the foundation elements may be proposed by the Contractor as long as the proposed method of entry and construction are in accordance with the permits and the *Standard Specifications*.

Contractor is responsible for ensuring that all top down construction is done by a means and method that is based on sound engineering principles. The contractor shall evaluate and examine the condition of the existing structure including all weight postings. The Contractor will be responsible for any required shoring or other to ensure that the existing structure will support any equipment intended to be used during construction. No payment will be made for this work.

Any alternate construction method proposed by the Contractor shall be completed at no cost to the Department.

FUEL PRICE ADJUSTMENT:
(11-15-05) (Rev. 1-17-12) 109-8 SP1 G43

Revise the *2012 Standard Specifications* as follows:

Page 1-83, Article 109-8, Fuel Price Adjustments, add the following:

The base index price for DIESEL #2 FUEL is **$3.0655** per gallon. Where any of the following are included as pay items in the contract, they will be eligible for fuel price adjustment.

The pay items and the fuel factor used in calculating adjustments to be made will be as follows:

Description	Units	Fuel Usage Factor Diesel
Unclassified Excavation	Gal/CY	0.29
Borrow Excavation	Gal/CY	0.29
Class IV Subgrade Stabilization	Gal/Ton	0.55
Aggregate Base Course	Gal/Ton	0.55
Asphalt Concrete Base Course, Type ____	Gal/Ton	2.90
Asphalt Concrete Intermediate Course, Type ____	Gal/Ton	2.90
Asphalt Concrete Surface Course, Type ____	Gal/Ton	2.90
Open-Graded Asphalt Friction Course	Gal/Ton	2.90
Sand Asphalt Surface Course, Type ____	Gal/Ton	2.90
Aggregate for Cement Treated Base Course	Gal/Ton	0.55
Portland Cement for Cement Treated Base Course	Gal/Ton	0.55
__" Portland Cement Concrete Pavement	Gal/SY	0.245
Concrete Shoulders Adjacent to __" Pavement	Gal/SY	0.245

DISADVANTAGED BUSINESS ENTERPRISE (DIVISIONS):
(10-16-07)(Rev.5-21-13) 102-15(J) SP1 G62

Description

The purpose of this Special Provision is to carry out the U.S. Department of Transportation's policy of ensuring nondiscrimination in the award and administration of contracts financed in whole or in part with Federal funds. This provision is guided by 49 CFR Part 26.

Definitions

Additional DBE Subcontractors - Any DBE submitted at the time of bid that will not be used to meet the DBE goal. No submittal of a Letter of Intent is required.

Committed DBE Subcontractor - Any DBE submitted at the time of bid that is being used to meet the DBE goal by submission of a Letter of Intent. Or any DBE used as a replacement for a previously committed DBE firm.

Contract Goal Requirement - The approved DBE participation at time of award, but not greater than the advertised contract goal.

DBE Goal - A portion of the total contract, expressed as a percentage, that is to be performed by committed DBE subcontractor(s).

Disadvantaged Business Enterprise (DBE) - A firm certified as a Disadvantaged Business Enterprise through the North Carolina Unified Certification Program.

Goal Confirmation Letter - Written documentation from the Department to the bidder confirming the Contractor's approved, committed DBE participation along with a listing of the committed DBE firms.

Manufacturer - A firm that operates or maintains a factory or establishment that produces on the premises, the materials or supplies obtained by the Contractor.

Regular Dealer - A firm that owns, operates, or maintains a store, warehouse, or other establishment in which the materials or supplies required for the performance of the contract are bought, kept in stock, and regularly sold to the public in the usual course of business. A regular dealer engages in, as its principal business and in its own name, the purchase and sale or lease of the products in question. A regular dealer in such bulk items as steel, cement, gravel, stone, and petroleum products need not keep such products in stock, if it owns and operates distribution equipment for the products. Brokers and packagers are not regarded as manufacturers or regular dealers within the meaning of this section.

North Carolina Unified Certification Program (NCUCP) - A program that provides comprehensive services and information to applicants for DBE certification, such that an applicant is required to apply only once for a DBE certification that will be honored by all recipients of USDOT funds in the state and not limited to the Department of Transportation only. The Certification Program is in accordance with 49 CFR Part 26.

United States Department of Transportation (USDOT) - Federal agency responsible for issuing regulations (49 CFR Part 26) and official guidance for the DBE program.

Forms and Websites Referenced in this Provision

DBE Payment Tracking System - On-line system in which the Contractor enters the payments made to DBE subcontractors who have performed work on the project. https://apps.dot.state.nc.us/Vendor/PaymentTracking/

DBE-IS *Subcontractor Payment Information* - Form for reporting the payments made to all DBE firms working on the project. This form is for paper bid projects only. http://www.ncdot.org/doh/forms/files/DBE-IS.xls

RF-1 *DBE Replacement Request Form* - Form for replacing a committed DBE.
http://connect.ncdot.gov/projects/construction/Construction%20Forms/DBE%20MBE%20WBE%20Replacement%20Request%20Form.pdf

SAF *Subcontract Approval Form* - Form required for approval to sublet the contract.
http://connect.ncdot.gov/projects/construction/Construction%20Forms/Subcontract%20Approval%20Form%20Rev.%202012.zip

JC-1 *Joint Check Notification Form* - Form and procedures for joint check notification. The form acts as a written joint check agreement among the parties providing full and prompt disclosure of the expected use of joint checks.
http://connect.ncdot.gov/projects/construction/Construction%20Forms/Joint%20Check%20Notification%20Form.pdf

Letter of Intent - Form signed by the Contractor and the DBE subcontractor, manufacturer or regular dealer that affirms that a portion of said contract is going to be performed by the signed DBE for the amount listed at the time of bid.
http://connect.ncdot.gov/letting/LetCentral/Letter%20of%20Intent%20to%20Perform%20as%20a%20Subcontractor.pdf

Listing of DBE Subcontractors Form - Form for entering DBE subcontractors on a project that will meet this DBE goal. This form is for paper bids only.
http://connect.ncdot.gov/municipalities/Bid%20Proposals%20for%20LGA%20Content/08%20DBE%20Subcontractors%20(Federal).doc
Subcontractor Quote Comparison Sheet - Spreadsheet for showing all subcontractor quotes in the work areas where DBEs quoted on the project. This sheet is submitted with good faith effort packages.
http://connect.ncdot.gov/business/SmallBusiness/Documents/DBE%20Subcontractor%20Quote%20Comparison%20Example.xls

DBE Goal

The following DBE goal for participation by Disadvantaged Business Enterprises is established for this contract:

Disadvantaged Business Enterprises **6.0** %

(A) *If the DBE goal is more than zero*, the Contractor shall exercise all necessary and reasonable steps to ensure that DBEs participate in at least the percent of the contract as set forth above as the DBE goal.

(B) *If the DBE goal is zero*, the Contractor shall make an effort to recruit and use DBEs during the performance of the contract. Any DBE participation obtained shall be reported to the Department.

Directory of Transportation Firms (Directory)

Real-time information is available about firms doing business with the Department and firms that are certified through NCUCP in the Directory of Transportation Firms. Only firms identified in the Directory as DBE certified shall be used to meet the DBE goal. The Directory can be found at the following link. https://partner.ncdot.gov/VendorDirectory/default.html

The listing of an individual firm in the directory shall not be construed as an endorsement of the firm's capability to perform certain work.

Listing of DBE Subcontractors

At the time of bid, bidders shall submit all DBE participation that they anticipate to use during the life of the contract. Only those identified to meet the DBE goal will be considered committed, even though the listing shall include both committed DBE subcontractors and additional DBE subcontractors. Additional DBE subcontractor participation submitted at the time of bid will be used toward the Department's overall race-neutral goal. Only those firms with current DBE certification at the time of bid opening will be acceptable for listing in the bidder's submittal of DBE participation. The Contractor shall indicate the following required information:

Blank forms will not be deemed to represent zero participation. Bids submitted that do not have DBE participation indicated on the appropriate form will not be read publicly during the opening of bids. The Department will not consider these bids for award and the proposal will be rejected.

(A) *If the DBE goal is more than zero,*

(1) Bidders, at the time the bid proposal is submitted, shall submit a listing of DBE participation, including the names and addresses on *Listing of DBE Subcontractors* contained elsewhere in the contract documents in order for the bid to be considered responsive. Bidders shall indicate the total dollar value of the DBE participation for the contract.

(2) If bidders have no DBE participation, they shall indicate this on the *Listing of DBE Subcontractors* by entering the word "None" or the number "0." This form shall be completed in its entirety.

(3) The bidder shall be responsible for ensuring that the DBE is certified at the time of bid by checking the Directory of Transportation Firms. If the firm is not certified at the time of the bid-letting, that DBE's participation will not count towards achieving the DBE goal.

(B) *If the DBE goal is zero,* bidders, at the time the bid proposal is submitted, shall enter the word "None"; or the number "0"; or if there is participation, add the value on the *Listing of DBE Subcontractors* contained elsewhere in the contract documents.

DBE Prime Contractor

When a certified DBE firm bids on a contract that contains a DBE goal, the DBE firm is responsible for meeting the goal or making good faith efforts to meet the goal, just like any other bidder. In most cases, a DBE bidder on a contract will meet the DBE goal by virtue of the work it performs on the contract with its own forces. However, all the work that is performed by the DBE bidder and any other DBE subcontractors will count toward the DBE goal. The DBE bidder shall list itself along with any DBE subcontractors, if any, in order to receive credit toward the DBE goal.

For example, if the DBE goal is 45% and the DBE bidder will only perform 40% of the contract work, the prime will list itself at 40%, and the additional 5% shall be obtained through additional DBE participation with DBE subcontractors or documented through a good faith effort.

DBE prime contractors shall also follow Sections A or B listed under *Listing of DBE Subcontractor* just as a non-DBE bidder would.

Written Documentation – Letter of Intent

The bidder shall submit written documentation for each DBE that will be used to meet the DBE goal of the contract, indicating the bidder's commitment to use the DBE in the contract. This documentation shall be submitted on the Department's form titled *Letter of Intent*.

The documentation shall be received in the office of the Engineer no later than 12:00 noon of the sixth calendar day following opening of bids, unless the sixth day falls on Saturday, Sunday or an official state holiday. In that situation, it is due in the office of the Engineer no later than 12:00 noon on the next official state business day.

If the bidder fails to submit the Letter of Intent from each committed DBE to be used toward the DBE goal, or if the form is incomplete (i.e. both signatures are not present), the DBE participation will not count toward meeting the DBE goal. If the lack of this participation drops the commitment below the DBE goal, the Contractor shall submit evidence of good faith

efforts, completed in its entirety, to the Engineer no later than 12:00 noon on the eighth calendar day following opening of bids, unless the eighth day falls on Saturday, Sunday or an official state holiday. In that situation, it is due in the office of the Engineer no later than 12:00 noon on the next official state business day.

Submission of Good Faith Effort

If the bidder fails to meet or exceed the DBE goal the apparent lowest responsive bidder shall submit to the Department documentation of adequate good faith efforts made to reach the DBE goal.

One complete set and (1) copy of this information shall be received in the office of the Engineer no later than 12:00 noon of the sixth calendar day following opening of bids, unless the sixth day falls on Saturday, Sunday or an official state holiday. In that situation, it is due in the office of the Engineer no later than 12:00 noon on the next official state business day.

Note: Where the information submitted includes repetitious solicitation letters, it will be acceptable to submit a representative letter along with a distribution list of the firms that were solicited. Documentation of DBE quotations shall be a part of the good faith effort submittal. This documentation may include written subcontractor quotations, telephone log notations of verbal quotations, or other types of quotation documentation.

Consideration of Good Faith Effort for Projects with DBE Goals More Than Zero

Adequate good faith efforts mean that the bidder took all necessary and reasonable steps to achieve the goal which, by their scope, intensity, and appropriateness, could reasonably be expected to obtain sufficient DBE participation. Adequate good faith efforts also mean that the bidder actively and aggressively sought DBE participation. Mere *pro forma* efforts are not considered good faith efforts.

The Department will consider the quality, quantity, and intensity of the different kinds of efforts a bidder has made. Listed below are examples of the types of actions a bidder will take in making a good faith effort to meet the goal and are not intended to be exclusive or exhaustive, nor is it intended to be a mandatory checklist.

(A) Soliciting through all reasonable and available means (e.g. attendance at pre-bid meetings, advertising, written notices, use of verifiable electronic means through the use of the NCDOT Directory of Transportation Firms) the interest of all certified DBEs who have the capability to perform the work of the contract. The bidder must solicit this interest within at least 10 days prior to bid opening to allow the DBEs to respond to the solicitation. Solicitation shall provide the opportunity to DBEs within the Division and surrounding Divisions where the project is located. The bidder must determine with certainty if the DBEs are interested by taking appropriate steps to follow up initial solicitations.

(B) Selecting portions of the work to be performed by DBEs in order to increase the likelihood that the DBE goals will be achieved.

(1) Where appropriate, break out contract work items into economically feasible units to facilitate DBE participation, even when the prime contractor might otherwise prefer to perform these work items with its own forces.

(2) Negotiate with subcontractors to assume part of the responsibility to meet the contract DBE goal when the work to be sublet includes potential for DBE participation (2nd and 3rd tier subcontractors).

(C) Providing interested DBEs with adequate information about the plans, specifications, and requirements of the contract in a timely manner to assist them in responding to a solicitation.

(D) (1) Negotiating in good faith with interested DBEs. It is the bidder's responsibility to make a portion of the work available to DBE subcontractors and suppliers and to select those portions of the work or material needs consistent with the available DBE subcontractors and suppliers, so as to facilitate DBE participation. Evidence of such negotiation includes the names, addresses, and telephone numbers of DBEs that were considered; a description of the information provided regarding the plans and specifications for the work selected for subcontracting; and evidence as to why additional agreements could not be reached for DBEs to perform the work.

(2) A bidder using good business judgment would consider a number of factors in negotiating with subcontractors, including DBE subcontractors, and would take a firm's price and capabilities as well as contract goals into consideration. However, the fact that there may be some additional costs involved in finding and using DBEs is not in itself sufficient reason for a bidder's failure to meet the contract DBE goal, as long as such costs are reasonable. Also, the ability or desire of a prime contractor to perform the work of a contract with its own organization does not relieve the bidder of the responsibility to make good faith efforts. Bidding contractors are not, however, required to accept higher quotes from DBEs if the price difference is excessive or unreasonable.

(E) Not rejecting DBEs as being unqualified without sound reasons based on a thorough investigation of their capabilities. The bidder's standing within its industry, membership in specific groups, organizations, or associates and political or social affiliations (for example, union vs. non-union employee status) are not legitimate causes for the rejection or non-solicitation of bids in the bidder's efforts to meet the project goal.

(F) Making efforts to assist interested DBEs in obtaining bonding, lines of credit, or insurance as required by the recipient or bidder.

(G) Making efforts to assist interested DBEs in obtaining necessary equipment, supplies, materials, or related assistance or services.

(H) Effectively using the services of available minority/women community organizations; minority/women contractors' groups; Federal, State, and local minority/women business assistance offices; and other organizations as allowed on a case-by-case basis to provide assistance in the recruitment and placement of DBEs. Contact within 7 days from the bid opening the Business Development Manager in the Business Opportunity and Work Force Development Unit to give notification of the bidder's inability to get DBE quotes.

(I) Any other evidence that the bidder submits which shows that the bidder has made reasonable good faith efforts to meet the DBE goal.

In addition, the Department may take into account the following:

(1) Whether the bidder's documentation reflects a clear and realistic plan for achieving the DBE goal.
(2) The bidders' past performance in meeting the DBE goals.

(3) The performance of other bidders in meeting the DBE goal. For example, when the apparent successful bidder fails to meet the DBE goal, but others meet it, you may reasonably raise the question of whether, with additional reasonable efforts the apparent successful bidder could have met the goal. If the apparent successful bidder fails to meet the DBE goal, but meets or exceeds the average DBE participation obtained by other bidders, the Department may view this, in conjunction with other factors, as evidence of the apparent successful bidder having made a good faith effort.

If the Department does not award the contract to the apparent lowest responsive bidder, the Department reserves the right to award the contract to the next lowest responsive bidder that can satisfy to the Department that the DBE goal can be met or that an adequate good faith effort has been made to meet the DBE goal.

Non-Good Faith Appeal

The Engineer will notify the contractor verbally and in writing of non-good faith. A contractor may appeal a determination of non-good faith made by the Goal Compliance Committee. If a contractor wishes to appeal the determination made by the Committee, they shall provide written notification to the Engineer. The appeal shall be made within 2 business days of notification of the determination of non-good faith.

Counting DBE Participation Toward Meeting DBE Goal

(A) Participation

The total dollar value of the participation by a committed DBE will be counted toward the contract goal requirement. The total dollar value of participation by a committed DBE will be based upon the value of work actually performed by the DBE and the actual payments to DBE firms by the Contractor.

(B) Joint Checks

Prior notification of joint check use shall be required when counting DBE participation for services or purchases that involves the use of a joint check. Notification shall be through submission of Form JC-1 *(Joint Check Notification Form)* and the use of joint checks shall be in accordance with the Department's Joint Check Procedures.

(C) Subcontracts (Non-Trucking)

A DBE may enter into subcontracts. Work that a DBE subcontracts to another DBE firm may be counted toward the contract goal requirement. Work that a DBE subcontracts to a non-DBE firm does <u>not</u> count toward the contract goal requirement. If a DBE contractor or subcontractor subcontracts a significantly greater portion of the work of the contract than would be expected on the basis of standard industry practices, it shall be presumed that the DBE is not performing a commercially useful function. The DBE may present evidence to rebut this presumption to the Department. The Department's decision on the rebuttal of this presumption is subject to review by the Federal Highway Administration but is not administratively appealable to USDOT.

(D) Joint Venture

When a DBE performs as a participant in a joint venture, the Contractor may count toward its contract goal requirement a portion of the total value of participation with the DBE in the joint venture, that portion of the total dollar value being a distinct clearly defined portion of work that the DBE performs with its forces.

(E) Suppliers

A contractor may count toward its DBE requirement 60 percent of its expenditures for materials and supplies required to complete the contract and obtained from a DBE regular dealer and 100 percent of such expenditures from a DBE manufacturer.

(F) Manufacturers and Regular Dealers

A contractor may count toward its DBE requirement the following expenditures to DBE firms that are not manufacturers or regular dealers:

(1) The fees or commissions charged by a DBE firm for providing a *bona fide* service, such as professional, technical, consultant, or managerial services, or for providing bonds or insurance specifically required for the performance of a DOT-assisted contract, provided the fees or commissions are determined to be reasonable and not excessive as compared with fees and commissions customarily allowed for similar services.

(2) With respect to materials or supplies purchased from a DBE, which is neither a manufacturer nor a regular dealer, count the entire amount of fees or

commissions charged for assistance in the procurement of the materials and supplies, or fees or transportation charges for the delivery of materials or supplies required on a job site (but not the cost of the materials and supplies themselves), provided the fees are determined to be reasonable and not excessive as compared with fees customarily allowed for similar services.

Commercially Useful Function

(A) DBE Utilization

The Contractor may count toward its contract goal requirement only expenditures to DBEs that perform a commercially useful function in the work of a contract. A DBE performs a commercially useful function when it is responsible for execution of the work of the contract and is carrying out its responsibilities by actually performing, managing, and supervising the work involved. To perform a commercially useful function, the DBE shall also be responsible with respect to materials and supplies used on the contract, for negotiating price, determining quality and quantity, ordering the material and installing (where applicable) and paying for the material itself. To determine whether a DBE is performing a commercially useful function, the Department will evaluate the amount of work subcontracted, industry practices, whether the amount the firm is to be paid under the contract is commensurate with the work it is actually performing and the DBE credit claimed for its performance of the work, and any other relevant factors.

(B) DBE Utilization in Trucking

The following factors will be used to determine if a DBE trucking firm is performing a commercially useful function:

(1) The DBE shall be responsible for the management and supervision of the entire trucking operation for which it is responsible on a particular contract, and there shall not be a contrived arrangement for the purpose of meeting DBE goals.

(2) The DBE shall itself own and operate at least one fully licensed, insured, and operational truck used on the contract.

(3) The DBE receives credit for the total value of the transportation services it provides on the contract using trucks it owns, insures, and operates using drivers it employs.

(4) The DBE may subcontract the work to another DBE firm, including an owner-operator who is certified as a DBE. The DBE who subcontracts work to another DBE receives credit for the total value of the transportation services the subcontracted DBE provides on the contract.

(5) The DBE may also subcontract the work to a non-DBE firm, including from an owner-operator. The DBE who subcontracts the work to a non-DBE is entitled

to credit for the total value of transportation services provided by the non-DBE subcontractor not to exceed the value of transportation services provided by DBE-owned trucks on the contract. Additional participation by non-DBE subcontractors receives credit only for the fee or commission it receives as a result of the subcontract arrangement. The value of services performed under subcontract agreements between the DBE and the Contractor will not count towards the DBE contract requirement.

(6) A DBE may lease truck(s) from an established equipment leasing business open to the general public. The lease must indicate that the DBE has exclusive use of and control over the truck. This requirement does not preclude the leased truck from working for others during the term of the lease with the consent of the DBE, so long as the lease gives the DBE absolute priority for use of the leased truck. This type of lease may count toward the DBE's credit as long as the driver is under the DBE's payroll.

(7) Subcontracted/leased trucks shall display clearly on the dashboard the name of the DBE that they are subcontracted/leased to and their own company name if it is not identified on the truck itself. Magnetic door signs are not permitted.

DBE Replacement

When a Contractor has relied on a commitment to a DBE firm (or an approved substitute DBE firm) to meet all or part of a contract goal requirement, the contractor shall not terminate the DBE for convenience. This includes, but is not limited to, instances in which the Contractor seeks to perform the work of the terminated subcontractor with another DBE subcontractor, a non-DBE subcontractor, or with the Contractor's own forces or those of an affiliate. A DBE may only be terminated after receiving the Engineer's written approval based upon a finding of good cause for the termination.

All requests for replacement of a committed DBE firm shall be submitted to the Engineer for approval on Form RF-1 *(DBE Replacement Request)*. If the Contractor fails to follow this procedure, the Contractor may be disqualified from further bidding for a period of up to 6 months.

The Contractor shall comply with the following for replacement of a committed DBE:

(A) Performance Related Replacement

When a committed DBE is terminated for good cause as stated above, an additional DBE that was submitted at the time of bid may be used to fulfill the DBE commitment. A good faith effort will only be required for removing a committed DBE if there were no additional DBEs submitted at the time of bid to cover the same amount of work as the DBE that was terminated.

If a replacement DBE is not found that can perform at least the same amount of work as the terminated DBE, the Contractor shall submit a good faith effort documenting the steps taken. Such documentation shall include, but not be limited to, the following:

(1) Copies of written notification to DBEs that their interest is solicited in contracting the work defaulted by the previous DBE or in subcontracting other items of work in the contract.

(2) Efforts to negotiate with DBEs for specific subbids including, at a minimum:

(a) The names, addresses, and telephone numbers of DBEs who were contacted.

(b) A description of the information provided to DBEs regarding the plans and specifications for portions of the work to be performed.

(3) A list of reasons why DBE quotes were not accepted.

(4) Efforts made to assist the DBEs contacted, if needed, in obtaining bonding or insurance required by the Contractor.

(B) Decertification Replacement

(1) When a committed DBE is decertified by the Department after the SAF (*Subcontract Approval Form*) has been received by the Department, the Department will not require the Contractor to solicit replacement DBE participation equal to the remaining work to be performed by the decertified firm. The participation equal to the remaining work performed by the decertified firm will count toward the contract goal requirement.

(2) When a committed DBE is decertified prior to the Department receiving the SAF (*Subcontract Approval Form*) for the named DBE firm, the Contractor shall take all necessary and reasonable steps to replace the DBE subcontractor with another DBE subcontractor to perform at least the same amount of work to meet the DBE goal requirement. If a DBE firm is not found to do the same amount of work, a good faith effort must be submitted to NCDOT (see A herein for required documentation).

Changes in the Work

When the Engineer makes changes that result in the reduction or elimination of work to be performed by a committed DBE, the Contractor will not be required to seek additional participation. When the Engineer makes changes that result in additional work to be performed by a DBE based upon the Contractor's commitment, the DBE shall participate in additional work to the same extent as the DBE participated in the original contract work.

When the Engineer makes changes that result in extra work, which has more than a minimal impact on the contract amount, the Contractor shall seek additional participation by DBEs unless otherwise approved by the Engineer.

When the Engineer makes changes that result in an alteration of plans or details of construction, and a portion or all of the work had been expected to be performed by a committed DBE, the Contractor shall seek participation by DBEs unless otherwise approved by the Engineer.

When the Contractor requests changes in the work that result in the reduction or elimination of work that the Contractor committed to be performed by a DBE, the Contractor shall seek additional participation by DBEs equal to the reduced DBE participation caused by the changes.

Reports and Documentation

A SAF (*Subcontract Approval Form*) shall be submitted for all work which is to be performed by a DBE subcontractor. The Department reserves the right to require copies of actual subcontract agreements involving DBE subcontractors.

When using transportation services to meet the contract commitment, the Contractor shall submit a proposed trucking plan in addition to the SAF. The plan shall be submitted prior to beginning construction on the project. The plan shall include the names of all trucking firms proposed for use, their certification type(s), the number of trucks owned by the firm, as well as the individual truck identification numbers, and the line item(s) being performed.

Within 30 calendar days of entering into an agreement with a DBE for materials, supplies or services, not otherwise documented by the SAF as specified above, the Contractor shall furnish the Engineer a copy of the agreement. The documentation shall also indicate the percentage (60% or 100%) of expenditures claimed for DBE credit.

Reporting Disadvantaged Business Enterprise Participation

The Contractor shall provide the Engineer with an accounting of payments made to all DBE firms, including material suppliers and contractors at all levels (prime, subcontractor, or second tier subcontractor). This accounting shall be furnished to the Engineer for any given month by the end of the following month. Failure to submit this information accordingly may result in the following action:

(A) Withholding of money due in the next partial pay estimate; or

(B) Removal of an approved contractor from the prequalified bidders' list or the removal of other entities from the approved subcontractors list.

While each contractor (prime, subcontractor, 2nd tier subcontractor) is responsible for accurate accounting of payments to DBEs, it shall be the prime contractor's responsibility to report all monthly and final payment information in the correct reporting manner.

Failure on the part of the Contractor to submit the required information in the time frame specified may result in the disqualification of that contractor and any affiliate companies from further bidding until the required information is submitted.

Failure on the part of any subcontractor to submit the required information in the time frame specified may result in the disqualification of that contractor and any affiliate companies from being approved for work on future projects until the required information is submitted.

Contractors reporting transportation services provided by non-DBE lessees shall evaluate the value of services provided during the month of the reporting period only.

At any time, the Engineer can request written verification of subcontractor payments.
The Contractor shall report the accounting of payments on the Department's DBE-IS *(Subcontractor Payment Information)* with each invoice. Invoices will not be processed for payment until the DBE-IS is received.

Failure to Meet Contract Requirements

Failure to meet contract requirements in accordance with Subarticle 102-15(J) of the *2012 Standard Specifications* may be cause to disqualify the Contractor.

CERTIFICATION FOR FEDERAL-AID CONTRACTS:
(3-21-90) SP1 G85

The prospective participant certifies, by signing and submitting this bid or proposal, to the best of his or her knowledge and belief, that:

(A) No Federal appropriated funds have been paid or will be paid, by or on behalf of the undersigned, to any person for influencing or attempting to influence an officer or employee of any Federal agency, a Member of Congress, an officer or employee of Congress, or an employee of a Member of Congress in connection with the awarding of any Federal contract, the making of any Federal grant, the making of any Federal loan, the entering into of any cooperative agreement, and the extension, continuation, renewal, amendment, or modification of any Federal contract, grant, loan, or cooperative agreement.

(B) If any funds other than Federal appropriated funds have been paid or will be paid to any person for influencing or attempting to influence an officer or employee of any Federal agency, a Member of Congress, an officer or employee of Congress, or an employee of a Member of Congress in connection with this Federal contract, grant, loan, or cooperative agreement, the undersigned shall complete and submit Standard Form-LLL, *Disclosure Form to Report Lobbying*, in accordance with its instructions.

This certification is a material representation of fact upon which reliance was placed when this transaction was made or entered into. Submission of this certification is a prerequisite for making or entering into this transaction imposed by *Section 1352, Title 31, U.S. Code*. Any person who

fails to file the required certification shall be subject to a civil penalty of not less than $10,000 and not more than $100,000 for each such failure.

The prospective participant also agrees by submitting his or her bid or proposal that he or she shall require that the language of this certification be included in all lower tier subcontracts, which exceed $100,000 and that all such subrecipients shall certify and disclose accordingly.

U.S. DEPARTMENT OF TRANSPORTATION HOTLINE:
(11-22-94) 108-5 SP1 G100

To report bid rigging activities call: **1-800-424-9071**

The U.S. Department of Transportation (DOT) operates the above toll-free hotline Monday through Friday, 8:00 a.m. to 5:00 p.m. eastern time. Anyone with knowledge of possible bid rigging, bidder collusion, or other fraudulent activities should use the hotline to report such activities.

The hotline is part of the DOT's continuing effort to identify and investigate highway construction contract fraud and abuse is operated under the direction of the DOT Inspector General. All information will be treated confidentially and caller anonymity will be respected.

SUBMISSION OF RECORDS - FEDERAL-AID PROJECTS:
(7-17-07) (8-21-12) SP1 G103

The Contractor's attention is directed to the Standard Special Provision entitled *Required Contract Provisions-Federal-Aid Construction Contracts* contained elsewhere in this proposal.

This project is located on a roadway classified as a local road or rural minor collector, therefore the requirements of Paragraph IV - Davis Bacon and Related Act Provisions are exempt from this contract.

SUBSURFACE INFORMATION:
(7-1-95) 450 SP1 G112 A

There is **no** subsurface information available on this project. The Contractor shall make his own investigation of subsurface conditions.

LOCATING EXISTING UNDERGROUND UTILITIES:
(3-20-12) 105 SP1 G115

Revise the *2012 Standard Specifications* as follows:

Page 1-43, Article 105-8, line 28, after the first sentence, add the following:

Identify excavation locations by means of pre-marking with white paint, flags, or stakes or provide a specific written description of the location in the locate request.

DOMESTIC STEEL:
(4-16-13) 106 SP1 G120

Revise the *2012 Standard Specifications* as follows:

P**age 1-49, Subarticle 106-1(B) Domestic Steel, lines 2-7,** replace the first paragraph with the following:

All steel and iron products that are permanently incorporated into this project shall be produced in the United States except minimal amounts of foreign steel and iron products may be used provided the combined material cost of the items involved does not exceed 0.1% of the total amount bid for the entire project or $2,500, whichever is greater. If invoices showing the cost of the material are not provided, the amount of the bid item involving the foreign material will be used for calculations. This minimal amount of foreign produced steel and iron products permitted for use is not applicable to high strength fasteners. Domestically produced high strength fasteners are required.

COOPERATION BETWEEN CONTRACTORS:
(7-1-95) 105-7 SP1 G133

The Contractor's attention is directed to Article 105-7 of the *2012 Standard Specifications*.

The Contractor on this project shall cooperate with the Contractor working within or adjacent to the limits of this project to the extent that the work can be carried out to the best advantage of all concerned.

TWELVE MONTH GUARANTEE:
(7-15-03) 108 SP1 G145

(A) The Contractor shall guarantee materials and workmanship against latent and patent defects arising from faulty materials, faulty workmanship or negligence for a period of twelve months following the date of final acceptance of the work for maintenance and shall replace such defective materials and workmanship without cost to the Department. The Contractor will not be responsible for damage due to faulty design, normal wear and tear, for negligence on the part of the Department, and/or for use in excess of the design.

(B) Where items of equipment or material carry a manufacturer's guarantee for any period in excess of twelve months, then the manufacturer's guarantee shall apply for that particular piece of equipment or material. The Department's first remedy shall be through the manufacturer although the Contractor is responsible for invoking the warranted repair work with the manufacturer. The Contractor's responsibility shall be limited to the term of the manufacturer's guarantee. NCDOT would be afforded the same warranty as provided by the Manufacturer.

This guarantee provision shall be invoked only for major components of work in which the Contractor would be wholly responsible for under the terms of the contract. Examples would include pavement structures, bridge components, and sign structures. This provision will not be used as a mechanism to force the Contractor to return to the project to make repairs or perform

additional work that the Department would normally compensate the Contractor for. In addition, routine maintenance activities (i.e. mowing grass, debris removal, ruts in earth shoulders,) are not parts of this guarantee.

Appropriate provisions of the payment and/or performance bonds shall cover this guarantee for the project.

To ensure uniform application statewide the Division Engineer will forward details regarding the circumstances surrounding any proposed guarantee repairs to the Chief Engineer for review and approval prior to the work being performed.

OUTSOURCING OUTSIDE THE USA:

(9-21-04) (Rev. 5-16-06) SP1 G150

All work on consultant contracts, services contracts, and construction contracts shall be performed in the United States of America. No work shall be outsourced outside of the United States of America.
Outsourcing for the purpose of this provision is defined as the practice of subcontracting labor, work, services, staffing, or personnel to entities located outside of the United States.

The North Carolina Secretary of Transportation shall approve exceptions to this provision in writing.

GIFTS FROM VENDORS AND CONTRACTORS:

(12-15-09) 107-1 SP1 G152

By Executive Order 24, issued by Governor Perdue, and *N.C.G.S.§ 133-32,* it is unlawful for any vendor or contractor (i.e. architect, bidder, contractor, construction manager, design professional, engineer, landlord, offeror, seller, subcontractor, supplier, or vendor), to make gifts or to give favors to any State employee of the Governor's Cabinet Agencies (i.e. Administration, Commerce, Correction, Crime Control and Public Safety, Cultural Resources, Environment and Natural Resources, Health and Human Services, Juvenile Justice and Delinquency Prevention, Revenue, Transportation, and the Office of the Governor). This prohibition covers those vendors and contractors who:

(A) Have a contract with a governmental agency; or
(B) Have performed under such a contract within the past year; or
(C) Anticipate bidding on such a contract in the future.

For additional information regarding the specific requirements and exemptions, vendors and contractors are encouraged to review Executive Order 24 and *N.C.G.S. § 133-32*.

Executive Order 24 also encouraged and invited other State Agencies to implement the requirements and prohibitions of the Executive Order to their agencies. Vendors and contractors should contact other State Agencies to determine if those agencies have adopted Executive Order 24.

EROSION AND SEDIMENT CONTROL/STORMWATER CERTIFICATION:

(1-16-07) (Rev 9-18-12) 105-16, 225-2, 16 SP1 G180

General

Schedule and conduct construction activities in a manner that will minimize soil erosion and the resulting sedimentation and turbidity of surface waters. Comply with the requirements herein regardless of whether or not a National Pollution discharge Elimination System (NPDES) permit for the work is required.

Establish a chain of responsibility for operations and subcontractors' operations to ensure that the *Erosion and Sediment Control/Stormwater Pollution Prevention Plan* is implemented and maintained over the life of the contract.

(A) *Certified Supervisor* - Provide a certified Erosion and Sediment Control/Stormwater Supervisor to manage the Contractor and subcontractor operations, insure compliance with Federal, State and Local ordinances and regulations, and manage the Quality Control Program.

(B) *Certified Foreman* - Provide a certified, trained foreman for each construction operation that increases the potential for soil erosion or the possible sedimentation and turbidity of surface waters.

(C) *Certified Installer* - Provide a certified installer to install or direct the installation for erosion or sediment/stormwater control practices.

(D) *Certified Designer* - Provide a certified designer for the design of the erosion and sediment control/stormwater component of reclamation plans and, if applicable, for the design of the project erosion and sediment control/stormwater plan.

Roles and Responsibilities

(A) *Certified Erosion and Sediment Control/Stormwater Supervisor* - The Certified Supervisor shall be Level II and responsible for ensuring the erosion and sediment control/stormwater plan is adequately implemented and maintained on the project and for conducting the quality control program. The Certified Supervisor shall be on the project within 24 hours notice from initial exposure of an erodible surface to the project's final acceptance. Perform the following duties:

(1) Manage Operations - Coordinate and schedule the work of subcontractors so that erosion and sediment control/stormwater measures are fully executed for each operation and in a timely manner over the duration of the contract.

(a) Oversee the work of subcontractors so that appropriate erosion and sediment control/stormwater preventive measures are conformed to at each stage of the work.

(b) Prepare the required National Pollutant Discharge Elimination System (NPDES) Inspection Record and submit to the Engineer.

(c) Attend all weekly or monthly construction meetings to discuss the findings of the NPDES inspection and other related issues.

(d) Implement the erosion and sediment control/stormwater site plans requested.

(e) Provide any needed erosion and sediment control/stormwater practices for the Contractor's temporary work not shown on the plans, such as, but not limited to work platforms, temporary construction, pumping operations, plant and storage yards, and cofferdams.

(f) Acquire applicable permits and comply with requirements for borrow pits, dewatering, and any temporary work conducted by the Contractor in jurisdictional areas.

(g) Conduct all erosion and sediment control/stormwater work in a timely and workmanlike manner.

(h) Fully perform and install erosion and sediment control/stormwater work prior to any suspension of the work.

(i) Coordinate with Department, Federal, State and Local Regulatory agencies on resolution of erosion and sediment control/stormwater issues due to the Contractor's operations.

(j) Ensure that proper cleanup occurs from vehicle tracking on paved surfaces or any location where sediment leaves the Right-of-Way.

(k) Have available a set of erosion and sediment control/stormwater plans that are initialed and include the installation date of Best Management Practices. These practices shall include temporary and permanent groundcover and be properly updated to reflect necessary plan and field changes for use and review by Department personnel as well as regulatory agencies.

(2) Requirements set forth under the NPDES Permit - The Department's NPDES Stormwater permit (NCS000250) outlines certain objectives and management measures pertaining to construction activities. The permit references *NCG010000, General Permit to Discharge Stormwater* under the NPDES, and states that the Department shall incorporate the applicable requirements into its delegated Erosion and Sediment Control Program for construction activities disturbing one or more acres of land. The Department further incorporates these requirements on all contracted bridge and culvert work at jurisdictional waters, regardless of size. Some of the requirements are, but are not limited to:

(a) Control project site waste to prevent contamination of surface or ground waters of the state, i.e. from equipment operation/maintenance, construction materials, concrete washout, chemicals, litter, fuels, lubricants, coolants, hydraulic fluids, any other petroleum products, and sanitary waste.

(b) Inspect erosion and sediment control/stormwater devices and stormwater discharge outfalls at least once every 7 calendar days, twice weekly for construction related *Federal Clean Water Act, Section 303(d)* impaired streams with turbidity violations, and within 24 hours after a significant rainfall event of 0.5 inch that occurs within a 24 hour period.

(c) Maintain an onsite rain gauge or use the Department's Multi-Sensor Precipitation Estimate website to maintain a daily record of rainfall amounts and dates.

(d) Maintain erosion and sediment control/stormwater inspection records for review by Department and Regulatory personnel upon request.

(e) Implement approved reclamation plans on all borrow pits, waste sites and staging areas.

(f) Maintain a log of turbidity test results as outlined in the Department's Procedure for Monitoring Borrow Pit Discharge.

(g) Provide secondary containment for bulk storage of liquid materials.

(h) Provide training for employees concerning general erosion and sediment control/stormwater awareness, the Department's NPDES Stormwater Permit NCS000250 requirements, and the applicable requirements of the *General Permit, NCG010000*.

(i) Report violations of the NPDES permit to the Engineer immediately who will notify the Division of Water Quality Regional Office within 24 hours of becoming aware of the violation.

(3) Quality Control Program - Maintain a quality control program to control erosion, prevent sedimentation and follow provisions/conditions of permits. The quality control program shall:

(a) Follow permit requirements related to the Contractor and subcontractors' construction activities.

(b) Ensure that all operators and subcontractors on site have the proper erosion and sediment control/stormwater certification.

(c) Notify the Engineer when the required certified erosion and sediment control/stormwater personnel are not available on the job site when needed.

(d) Conduct the inspections required by the NPDES permit.

(e) Take corrective actions in the proper timeframe as required by the NPDES permit for problem areas identified during the NPDES inspections.

(f) Incorporate erosion control into the work in a timely manner and stabilize disturbed areas with mulch/seed or vegetative cover on a section-by-section basis.

(g) Use flocculants approved by state regulatory authorities where appropriate and where required for turbidity and sedimentation reduction.

(h) Ensure proper installation and maintenance of temporary erosion and sediment control devices.

(i) Remove temporary erosion or sediment control devices when they are no longer necessary as agreed upon by the Engineer.

(j) The Contractor's quality control and inspection procedures shall be subject to review by the Engineer. Maintain NPDES inspection records and make records available at all times for verification by the Engineer.

(B) *Certified Foreman* - At least one Certified Foreman shall be onsite for each type of work listed herein during the respective construction activities to control erosion, prevent sedimentation and follow permit provisions:

(1) Foreman in charge of grading activities
(2) Foreman in charge of bridge or culvert construction over jurisdictional areas
(3) Foreman in charge of utility activities

The Contractor may request to use the same person as the Level II Supervisor and Level II Foreman. This person shall be onsite whenever construction activities as described above are taking place. This request shall be approved by the Engineer prior to work beginning.

The Contractor may request to name a single Level II Foreman to oversee multiple construction activities on small bridge or culvert replacement projects. This request shall be approved by the Engineer prior to work beginning.

(C) *Certified Installers* - Provide at least one onsite, Level I Certified Installer for each of the following erosion and sediment control/stormwater crew:

(1) Seeding and Mulching
(2) Temporary Seeding
(3) Temporary Mulching
(4) Sodding
(5) Silt fence or other perimeter erosion/sediment control device installations
(6) Erosion control blanket installation
(7) Hydraulic tackifier installation
(8) Turbidity curtain installation
(9) Rock ditch check/sediment dam installation
(10) Ditch liner/matting installation
(11) Inlet protection
(12) Riprap placement
(13) Stormwater BMP installations (such as but not limited to level spreaders, retention/detention devices)
(14) Pipe installations within jurisdictional areas

If a Level I *Certified Installer* is not onsite, the Contractor may substitute a Level II Foreman for a Level I Installer, provided the Level II Foreman is not tasked to another crew requiring Level II Foreman oversight.

(D) *Certified Designer* - Include the certification number of the Level III-B Certified Designer on the erosion and sediment control/stormwater component of all reclamation plans and if applicable, the certification number of the Level III-A Certified Designer on the design of the project erosion and sediment control/stormwater plan.

Preconstruction Meeting

Furnish the names of the *Certified Erosion and Sediment Control/Stormwater Supervisor, Certified Foremen, Certified Installers* and *Certified Designer* and notify the Engineer of changes in certified personnel over the life of the contract within 2 days of change.

Ethical Responsibility

Any company performing work for the North Carolina Department of Transportation has the ethical responsibility to fully disclose any reprimand or dismissal of an employee resulting from improper testing or falsification of records.

Revocation or Suspension of Certification

Upon recommendation of the Chief Engineer to the certification entity, certification for *Supervisor, Certified Foremen, Certified Installers* and *Certified Designer* may be revoked or suspended with the issuance of an *Immediate Corrective Action (ICA), Notice of Violation (NOV),* or C*ease and Desist Order* for erosion and sediment control/stormwater related issues.

The Chief Engineer may recommend suspension or permanent revocation of certification due to the following:

(A) Failure to adequately perform the duties as defined within this certification provision.
(B) Issuance of an ICA, NOV, or Cease and Desist Order.
(C) Failure to fully perform environmental commitments as detailed within the permit conditions and specifications.
(D) Demonstration of erroneous documentation or reporting techniques.
(E) Cheating or copying another candidate's work on an examination.
(F) Intentional falsification of records.
(G) Directing a subordinate under direct or indirect supervision to perform any of the above actions.
(H) Dismissal from a company for any of the above reasons.
(I) Suspension or revocation of one's certification by another entity.

Suspension or revocation of a certification will be sent by certified mail to the certificant and the Corporate Head of the company that employs the certificant.

A certificant has the right to appeal any adverse action which results in suspension or permanent revocation of certification by responding, in writing, to the Chief Engineer within 10 calendar days after receiving notice of the proposed adverse action.

Chief Engineer
1536 Mail Service Center
Raleigh, NC 27699-1536

Failure to appeal within 10 calendar days will result in the proposed adverse action becoming effective on the date specified on the certified notice. Failure to appeal within the time specified will result in a waiver of all future appeal rights regarding the adverse action taken. The certificant will not be allowed to perform duties associated with the certification during the appeal process.

The Chief Engineer will hear the appeal and make a decision within 7 days of hearing the appeal. Decision of the Chief Engineer will be final and will be made in writing to the certificant.

If a certification is temporarily suspended, the certificant shall pass any applicable written examination and any proficiency examination, at the conclusion of the specified suspension period, prior to having the certification reinstated.

Measurement and Payment

Certified Erosion and Sediment Control/Stormwater Supervisor, Certified Foremen, Certified Installers and *Certified Designer* will be incidental to the project for which no direct compensation will be made.

EMPLOYMENT:

(11-15-11) (Rev. 1-17-12) 108, 102 SP1 G184

Revise the *2012 Standard Specifications* as follows:

Page 1-20, Subarticle 102-15(O), delete and replace with the following:

(O) Failure to restrict a former Department employee as prohibited by Article 108-5.

Page 1-65, Article 108-5 Character of Workmen, Methods, and Equipment, line 32, delete all of line 32, the first sentence of the second paragraph and the first word of the second sentence of the second paragraph.

STATE HIGHWAY ADMINISTRATOR TITLE CHANGE:

(9-18-12) SP1 G185

Revise the *2012 Standard Specifications* as follows:

Replace all references to “State Highway Administrator” with “Chief Engineer”.

PROJECT SPECIAL PROVISIONS
ROADWAY

CLEARING AND GRUBBING - METHOD II:

(9-17-02) (Rev. 1-17-12) 200 SP2 R02A

Perform clearing on this project to the limits established by Method "II" shown on Standard Drawing No. 200.02 of the *2012 Roadway Standard Drawings*.

SHOULDER AND FILL SLOPE MATERIAL:

(5-21-02) 235, 560 SP2 R45 A

Description

Perform the required shoulder and slope construction for this project in accordance with the applicable requirements of Section 560 and Section 235 of the *2012 Standard Specifications*.

Measurement and Payment

Where the material has been obtained from an authorized stockpile or from a borrow source and *Borrow Excavation* is not included in the contract, no direct payment will be made for this work, as the cost of this work will be part of the work being paid at the contract lump sum price for *Grading*. If *Borrow Excavation* is included in this contract and the material has been obtained from an authorized stockpile or from a borrow source, measurement and payment will be as provided in Section 230 of the *2012 Standard Specifications* for *Borrow Excavation*.

PIPE INSTALLATION:

(11-20-12) 300 SP3 R01

Revise the *2012 Standard Specifications* as follows:

Page 3-1, Article 300-2, Materials, line 23-24, replace sentence with:

Provide foundation conditioning geotextile in accordance with Section 1056 for Type 4 geotextile.

BRIDGE APPROACH FILLS:

(10-19-10) (Rev. 1-17-12) 422 SP4 R02

Description

Bridge approach fills include bridge approach fills for sub regional tier bridges and reinforced bridge approach fills. Construct bridge approach fills in accordance with the contract and Standard Drawing No. 422.10 or 422.11 of the *2012 Roadway Standard Drawings*. Define "geosynthetics" as geotextiles or geomembranes.

Materials

Refer to Division 10 of the *2012 Standard Specifications*.

Item	**Section**
Anchor Pins	1056-2
Geotextiles	1056
Portland Cement Concrete	1000
Select Material	1016
Subsurface Drainage Materials	1044
Wire Staples	1060-8(D)

For bridge approach fills for sub regional tier bridges, provide Type 1 geotextile for filtration geotextiles. For reinforced bridge approach fills, provide Type 5 geotextile for geotextile reinforcement and Type 1 geotextile and No. 78M stone for drains. Use Class B concrete for concrete pads.

Use Class III or V select material for reinforced bridge approach fills and only Class V select material (standard size No. 78M stone) for bridge approach fills for sub regional tier bridges. Provide PVC pipes, fittings and outlet pipes for subsurface drainage materials. For drains and PVC pipes behind end bents, use pipes with perforations that meet AASHTO M 278.

Use PVC, HDPE or linear low density polyethylene (LLDPE) geomembranes for reinforced bridge approach fills. For PVC geomembranes, provide grade PVC30 geomembranes that meet ASTM D7176. For HDPE and LLDPE geomembranes, use geomembranes with a nominal thickness of at least 30 mils that meet Geosynthetic Research Institute Standard Specifications GM13 or GM17, respectively. Handle and store geomembranes in accordance with Article 1056-2 of the *2012 Standard Specifications*. Provide material certifications for geomembranes in accordance with Article 1056-3 of the *2012 Standard Specifications*.

Construction Methods

Excavate as necessary for bridge approach fills in accordance with the contract. Notify the Engineer when foundation excavation is complete. Do not place geomembranes or filtration geotextiles until excavation dimensions and foundation material are approved. Attach geomembranes and filtration geotextiles to end bent cap back and wing walls with adhesives, tapes or other approved methods. Glue or weld geomembrane seams to prevent leakage.

For reinforced bridge approach fills, place geotextile reinforcement within 3" of locations shown in Standard Drawing No. 422.10 of the *2012 Roadway Standard Drawings* and in slight tension free of kinks, folds, wrinkles or creases. Install geotextile reinforcement with the orientation, dimensions and number of layers shown in Standard Drawing No. 422.10 of the *2012 Roadway Standard Drawings*. Place first layer of geotextile reinforcement directly on geomembranes with no void or material in between. Install geotextile reinforcement with the machine direction (MD) parallel to the roadway centerline. The MD is the direction of the length or long dimension of the geotextile roll. Do not splice or overlap geotextile reinforcement in the MD so seams are

perpendicular to the roadway centerline. Wrap geotextile reinforcement at end bent cap back and wing walls as shown in Standard Drawing No. 422.10 of the *2012 Roadway Standard Drawings* and directed by the Engineer. Extend geotextile reinforcement at least 4 ft back behind end bent cap back and wing walls into select material.

Overlap adjacent geotextiles at least 18" with seams oriented parallel to the roadway centerline. Hold geotextiles in place with wire staples or anchor pins as needed. Contact the Engineer when existing or future obstructions such as foundations, pavements, pipes, inlets or utilities will interfere with geosynthetics.

For reinforced bridge approach fills, construct one foot square drains consisting of 4" diameter continuous perforated PVC pipes surrounded by No. 78M stone wrapped in Type 1 geotextiles. Install drains in accordance with Standard Drawing No. 422.10 of the *2012 Roadway Standard Drawings*. For bridge approach fills for sub regional tier bridges, install 4" diameter continuous perforated PVC drain pipes in accordance with Standard Drawing No. 422.11 of the *2012 Roadway Standard Drawings*.

Use solvent cement to connect PVC pipes so joints do not leak. Connect perforated pipes to outlet pipes just behind wing walls. Provide drain pipes and drains with positive drainage towards outlets. Place pipe sleeves in or under wing walls for outlet pipes so positive drainage is maintained. Use sleeves that can withstand wing wall loads.

Place select material in 8" to 10" thick lifts. Use only hand operated compaction equipment to compact select material for bridge approach fills. Compact Class III select material in accordance with Subarticle 235-3(C) of the *2012 Standard Specifications*. Compact No. 78M stone with a vibratory compactor to the satisfaction of the Engineer. Do not displace or damage geosynthetics, drain pipes or drains when placing and compacting select material. End dumping directly on geosynthetics is not permitted. Do not operate heavy equipment on geosynthetics, drain pipes or drains until they are covered with at least 8" of select material. Replace any damaged geosynthetics, drain pipes or drains to the satisfaction of the Engineer.

Cover open ends of outlet pipes with rodent screens as shown in Standard Drawing No. 815.03 of the *2012 Roadway Standard Drawings*. Connect ends of outlet pipes to concrete pads or existing drainage structures as directed by the Engineer. Construct concrete pads with an Ordinary surface finish that meets Subarticle 825-6(B) of the *2012 Standard Specifications*.

Measurement and Payment

Reinforced Bridge Approach Fill, Station ____ will be paid at the contract lump sum price. The contract lump sum price for *Reinforced Bridge Approach Fill, Station* ____ will be full compensation for labor, tools, equipment and reinforced bridge approach fill materials, excavating, backfilling, hauling and removing excavated materials, compacting select material, connecting outlet pipes to existing drainage structures and supplying select materials, geosynthetics, drains, pipe sleeves and outlet components and any incidentals necessary to construct all reinforced bridge approach fills at each bridge.

Bridge Approach Fill - Sub Regional Tier, Station ____ will be paid at the contract lump sum price. The contract lump sum price for *Bridge Approach Fill - Sub Regional Tier, Station* ____ will be full compensation for labor, tools, equipment and bridge approach fill materials, excavating, backfilling, hauling and removing excavated materials, compacting No. 78M stone, connecting outlet pipes to existing drainage structures and supplying No. 78M stone, filtration geotextiles, drain pipes, pipe sleeves and outlet components and any incidentals necessary to construct all bridge approach fills at each sub regional tier bridge.

Payment will be made under:

Pay Item	**Pay Unit**
Reinforced Bridge Approach Fill, Station ____	Lump Sum
Bridge Approach Fill - Sub Regional Tier, Station ____	Lump Sum

ASPHALT PAVEMENTS - SUPERPAVE:

(6-19-12) (Rev. 10-15-13) 605, 609, 610, 650 SP6 R01

Revise the *2012 Standard Specifications* as follows:

Page 6-3, Article 605-7 APPLICATION RATES AND TEMPERATURES, replace this article, including Table 601-1, with the following:

Apply tack coat uniformly across the existing surface at target application rates shown in Table 605-1.

TABLE 605-1
APPLICATION RATES FOR TACK COAT

Existing Surface	**Target Rate (gal/sy)**
	Emulsified Asphalt
New Asphalt	0.04 ± 0.01
Oxidized or Milled Asphalt	0.06 ± 0.01
Concrete	0.08 ± 0.01

Apply tack coat at a temperature within the ranges shown in Table 605-2. Tack coat shall not be overheated during storage, transport or at application.

TABLE 605-2
APPLICATION TEMPERATURE FOR TACK COAT

Asphalt Material	**Temperature Range**
Asphalt Binder, Grade PG 64-22	350 - 400°F
Emulsified Asphalt, Grade RS-1H	130 - 160°F
Emulsified Asphalt, Grade CRS-1	130 - 160°F
Emulsified Asphalt, Grade CRS-1H	130 - 160°F
Emulsified Asphalt, Grade HFMS-1	130 - 160°F
Emulsified Asphalt, Grade CRS-2	130 - 160°F

Page 6-7, Article 609-3 FIELD VERIFICATION OF MIXTURE AND JOB MIX FORMULA ADJUSTMENTS, lines 35-37, delete the second sentence of the second paragraph.

Page 6-18, Article 610-1 DESCRIPTION, lines 40-41, delete the last sentence of the last paragraph.

Page 6-19, Subarticle 610-3(A) Mix Design-General, line 5, add the following as the first paragraph:

Warm mix asphalt (WMA) is allowed for use at the Contractor's option in accordance with the NCDOT Approved Products List for WMA Technologies available at:

https://connect.ncdot.gov/resources/Materials/MaterialsResources/WMA%20Approved%20Lists.pdf

Page 6-21, Subarticle 610-3(C) Job Mix Formula (JMF), replace Table 610-1 with the following:

TABLE 610-1 DESIGN MIXING TEMPERATURE AT THE ASPHALT PLANT[A]		
Binder Grade	**HMA JMF Temperature**	**WMA JMF Temperature Range**
PG 64-22	300ºF	225 - 275ºF
PG 70-22	315ºF	240 - 290ºF
PG 76-22	335ºF	260 - 310ºF

A. The mix temperature, when checked in the truck at the roadway, shall be within plus 15º and minus 25º of the temperature specified on the JMF.

Page 6-21, Subarticle 610-3(C) Job Mix Formula (JMF), lines 4-6, delete first sentence of the second paragraph. Line 7, in the second sentence of the second paragraph, replace "275ºF" with "275ºF or greater."

Page 6-22, Article 610-4 WEATHER, TEMPERATURE AND SEASONAL LIMITATIONS FOR PRODUCING AND PLACING ASPHALT MIXTURES, lines 15-17, replace the second sentence of the first paragraph with the following:

Do not place asphalt material when the air or surface temperatures, measured at the location of the paving operation away from artificial heat, do not meet Table 610-5.

Page 6-23, Article 610-4 WEATHER, TEMPERATURE AND SEASONAL LIMITATIONS FOR PRODUCING AND PLACING ASPHALT MIXTURES, replace Table 610-5 with the following:

TABLE 610-5 PLACEMENT TEMPERATURES FOR ASPHALT	
Asphalt Concrete Mix Type	**Minimum Surface and Air Temperature**
B25.0B, C	35°F
I19.0B, C, D	35°F
SF9.5A, S9.5B	40°F
S9.5C, S12.5C	45°F
S9.5D, S12.5D	50°F

Page 6-26, Article 610-7 HAULING OF ASPHALT MIXTURE, lines 22-23, in the fourth sentence of the first paragraph replace "so as to overlap the top of the truck bed and" with "to".

Page 6-41, Subrticle 650-3(B) Mix Design Criteria, replace Table 650-1 with the following:

TABLE 650-1 OGAFC GRADATION CRITERIA			
Grading Requirements	**Total Percent Passing**		
Sieve Size (mm)	*Type FC-1*	*Type FC-1 Modified*	*Type FC-2 Modified*
19.0	-	-	100
12.5	100	100	**80** - 100
9.50	75 - 100	75 - 100	55 - **80**
4.75	25 - 45	25 - 45	15 - **30**
2.36	5 - 15	5 - 15	5 - **15**
0.075	1.0 - 3.0	1.0 - 3.0	2.0 - 4.0

ASPHALT PAVER - FIXED AND MOBILE STRING LINE:
(10-21-03) (Rev. 1-17-12) 610 SP6 R06B

A mobile string line consisting of a 30 to 40 foot long ski is required for the widening and resurfacing on this project. A fixed string line is required for the new pavement construction on this project.

ASPHALT BINDER CONTENT OF ASPHALT PLANT MIXES:
(11-21-00) (Rev. 7-17-12) 609 SP6 R15

The approximate asphalt binder content of the asphalt concrete plant mixtures used on this project will be as follows:

Asphalt Concrete Base Course	Type B 25.0__	4.4%
Asphalt Concrete Intermediate Course	Type I 19.0__	4.8%
Asphalt Concrete Surface Course	Type S 4.75A	6.8%
Asphalt Concrete Surface Course	Type SA-1	6.8%
Asphalt Concrete Surface Course	Type SF 9.5A	6.7%
Asphalt Concrete Surface Course	Type S 9.5__	6.0%
Asphalt Concrete Surface Course	Type S 12.5__	5.6%

The actual asphalt binder content will be established during construction by the Engineer within the limits established in the *2012 Standard Specifications.*

PRICE ADJUSTMENT - ASPHALT BINDER FOR PLANT MIX:
(11-21-00) 620 SP6 R25

Price adjustments for asphalt binder for plant mix will be made in accordance with Section 620 of the *2012 Standard Specifications.*

The base price index for asphalt binder for plant mix is **$569.38** per ton.

This base price index represents an average of F.O.B. selling prices of asphalt binder at supplier's terminals on **November 1, 2013**.

FINAL SURFACE TESTING NOT REQUIRED:
(5-18-04) (Rev. 5-15-12) 610 SP6 R45

Final surface testing is not required on this project.

GUARDRAIL ANCHOR UNITS, TYPE 350:
(4-20-04) (Rev. 8-16-11) 862 SP8 R65

Description

Furnish and install guardrail anchor units in accordance with the details in the plans, the applicable requirements of Section 862 of the *2012 Standard Specifications*, and at locations shown in the plans.

Materials

The Contractor may at his option, furnish any one of the guardrail anchor units or approved equal.

Guardrail anchor unit (ET-Plus) as manufactured by:

Trinity Industries, Inc.
2525 N. Stemmons Freeway
Dallas, Texas 75207
Telephone: 800-644-7976

The guardrail anchor unit (SKT 350) as manufactured by:

Road Systems, Inc.
3616 Old Howard County Airport
Big Spring, Texas 79720
Telephone: 915-263-2435

Prior to installation the Contractor shall submit to the Engineer:

(A) FHWA acceptance letter for each guardrail anchor unit certifying it meets the requirements of NCHRP Report 350, Test Level 3, in accordance with Article 106-2 of the *2012 Standard Specifications*.

(B) Certified working drawings and assembling instructions from the manufacturer for each guardrail anchor unit in accordance with Article 105-2 of the *2012 Standard Specifications*.

No modifications shall be made to the guardrail anchor unit without the express written permission from the manufacturer. Perform installation in accordance with the details in the plans, and details and assembling instructions furnished by the manufacturer.

Construction Methods

Guardrail end delineation is required on all approach and trailing end sections for both temporary and permanent installations. Guardrail end delineation consists of yellow reflective sheeting applied to the entire end section of the guardrail in accordance with Article 1088-3 of the *2012 Standard Specifications* and is incidental to the cost of the guardrail anchor unit.

Measurement and Payment

Measurement and payment will be made in accordance with Article 862-6 of the *2012 Standard Specifications*.

Payment will be made under:

Pay Item	Pay Unit
Guardrail Anchor Units, Type 350	Each

PREFORMED SCOUR HOLE WITH LEVEL SPREADER APRON:

(10-15-02) (Rev. 10-20-09) 410 SP8 R105

Description

Construct and maintain preformed scour holes with spreader aprons at the locations shown on the plans and in accordance with the details in the plans. Work includes excavation, shaping and maintaining the hole and apron, furnishing and placing filter fabric, rip rap (class as specified in the plans) and permanent soil reinforcement matting.

Materials

Item	Section
Plain Rip Rap	1042
Filter Fabric	1056

The permanent soil reinforcement matting shall be permanent erosion control reinforcement mat and shall be constructed of synthetic or a combination of coconut and synthetic fibers evenly

distributed throughout the mat between a bottom UV stabilized netting and a heavy duty UV stabilized top net. The matting shall be stitched together with UV stabilized polypropylene thread to form a permanent three dimensional structure. The mat shall have the following minimum physical properties:

Property	**Test Method**	**Value Unit**
Light Penetration	ASTM D6567	9 %
Thickness	ASTM D6525	0.40 in
Mass Per Unit Area	ASTM D6566	0.55 lb/sy
Tensile Strength	ASTM D6818	385 lb/ft
Elongation (Maximum)	ASTM D6818	49 %
Resiliency	ASTM D1777	>70 %
UV Stability *	ASTM 4355	≥80 %
Porosity (Permanent Net)	ECTC Guidelines	≥85 %
Maximum Permissible Shear Stress (Vegetated)	Performance Bench Test	≥8.0 lb/ft^2
Maximum Allowable Velocity (Vegetated)	Performance Bench Test	≥16.0 ft/s

*ASTM D1682 Tensile Strength and % strength retention of material after 1,000 hours of exposure.

Submit a certification (Type 1, 2, or 3) from the manufacturer showing:

(A) The chemical and physical properties of the mat used, and
(B) Conformance of the mat with this specification.

Construction Methods

All areas to be protected with the mat shall be brought to final grade and seeded in accordance with Section 1660 of the *2012 Standard Specifications*. The surface of the soil shall be smooth, firm, stable and free of rocks, clods, roots or other obstructions that would prevent the mat from lying in direct contact with the soil surface. Areas where the mat is to be placed will not need to be mulched.

Measurement and Payment

Preformed Scour Holes with Level Spreader Aprons will be measured and paid as the actual number incorporated into the completed and accepted work. Such price and payment will be full compensation for all work covered by this provision.

Payment will be made under:

Pay Item	**Pay Unit**
Preformed Scour Hole with Level Spreader Aprons	Each

MATERIALS:

(2-21-12) (Rev. 11-19-13) 1000, 1005, 1050, 1074, 1078, 1080, 1081, 1084, 1087, 1092 SP10 R01

Revise the *2012 Standard Specifications* as follows:

Page 10-1, Article 1000-1, DESCRIPTION, line 14, add the following:

Use materials which do not produce a mottled appearance through rusting or other staining of the finished concrete surface.

Page 10-5, Table 1000-1, REQUIREMENTS FOR CONCRETE, replace with the following:

TABLE 1000-1
REQUIREMENTS FOR CONCRETE

Class of Concrete	Min. Comp. Strength at 28 days	Maximum Water-Cement Ratio				Consistency Max. Slump		Cement Content			
		Air-Entrained Concrete		Non Air-Entrained Concrete		Vibrated	Non-Vibrated	Vibrated		Non- Vibrated	
		Rounded Aggregate	Angular Aggre-gate	Rounded Aggregate	Angular Aggre-gate			Min.	Max.	Min.	Max.
Units	*psi*					*inch*	*inch*	*lb/cy*	*lb/cy*	*lb/cy*	*lb/cy*
AA	4,500	0.381	0.426	-	-	3.5	-	639	715	-	-
AA Slip Form	4,500	0.381	0.426	-	-	1.5	-	639	715	-	-
Drilled Pier	4,500	-	-	0.450	0.450	-	5-7 dry 7-9 wet	-	-	640	800
A	3,000	0.488	0.532	0.550	0.594	3.5	4	564	-	602	-
B	2,500	0.488	0.567	0.559	0.630	2.5	4	508	-	545	-
B Slip Formed	2,500	0.488	0.567	-	-	1.5	-	508	-	-	-
Sand Light-weight	4,500	-	0.420	-	-	4	-	715	-	-	-
Latex Modified	3,000 7 day	0.400	0.400	-	-	6	-	658	-	-	-
Flowable Fill excavatable	150 max. at 56 days	as needed	as needed	as needed	as needed	-	Flow-able	-	-	40	100
Flowable Fill non-excavatable	125	as needed	as needed	as needed	as needed	-	Flow-able	-	-	100	as needed
Pavement	4,500 design, field 650 flexural, design only	0.559	0.559	-	-	1.5 slip form 3.0 hand place	-	526	-	-	-
Precast	See Table 1077-1	as needed	as needed	-	-	6	as needed	as needed	as needed	as needed	as needed
Prestress	per contract	See Table 1078-1	See Table 1078-1	-	-	8	-	564	as needed	-	-

Page 10-65, Article 1050-1, GENERAL, line 41, replace the first sentence with:

All fencing material and accessories shall meet Section 106.

Page 10-23, Table 1005-1, AGGREGATE GRADATION-COARSE AGGREGATE, replace with the following:

TABLE 1005-1
AGGREGATE GRADATION - COARSE AGGREGATE

Percentage of Total by Weight Passing

Std. Size #	2"	1 1/2"	1"	3/4"	1/2"	3/8"	#4	#8	#10	#16	#40	#200	Remarks
4	100	90-100	20-55	0-15	-	0-5	-	-	-	-	-	**A**	Asphalt Plant Mix
467M	100	95-100	-	35-70	-	0-30	0-5	-	-	-	-	**A**	Asphalt Plant Mix
5	-	100	90-100	20-55	0-10	0-5	-	-	-	-	-	**A**	AST, Sediment Control Stone
57	-	100	95-100	-	25-60	-	0-10	0-5	-	-	-	**A**	AST, Str. Concrete, Shoulder Drain, Sediment Control Stone
57M	-	100	95-100	-	25-45	-	0-10	0-5	-	-	-	**A**	AST, Concrete Pavement
6M	-	-	100	90-100	20-55	0-20	0-8	-	-	-	-	**A**	AST
67	-	-	100	90-100	-	20-55	0-10	0-5	-	-	-	**A**	AST, Str. Concrete, Asphalt Plant Mix
78M	-	-	-	100	98-100	75-100	20-45	0-15	-	-	-	**A**	Asphalt Plant Mix, AST, Str. Conc, Weep Hole Drains
14M	-	-	-	-	-	100	35-70	5-20	-	0-8	-	**A**	Asphalt Plant Mix, AST, Weep Hole Drains, Str. Concrete
9	-	-	-	-	-	100	85-100	10-40	-	0-10	-	**A**	AST
ABC	-	100	75-97	-	55-80	-	35-55	-	25-45	-	14-30	4-12[B]	Aggregate Base Course, Aggregate Stabilization
ABC (M)	-	100	75-100	-	45-79	-	20-40	-	0-25	-	-	0-12[B]	Maintenance Stabilization
Light-weight[C]	-	-	-	-	100	80-100	5-40	0-20	-	0-10	-	0-2.5	AST

A. See Subarticle 1005-4(A).
B. See Subarticle 1005-4(B).
C. For Lightweight Aggregate used in Structural Concrete, see Subarticle 1014-2(E)(6).

Page 10-115, Subarticle 1074-7(B), Gray Iron Castings, lines 10-11, replace with the first two sentences with the following:

Supply gray iron castings meeting all facets of AASHTO M 306 excluding proof load. Proof load testing will only be required for new casting designs during the design process, and conformance to M306 loading (40,000 lbs.) will be required only when noted on the design documents.

Page 10-126, Table 1078-1, REQUIREMENTS FOR CONCRETE, replace with the following:

TABLE 1078-1 REQUIREMENTS FOR CONCRETE		
Property	**28 Day Design Compressive Strength 6,000 psi or less**	**28 Day Design Compressive Strength greater than 6,000 psi**
Maximum Water/Cementitious Material Ratio	0.45	0.40
Maximum Slump without HRWR	3.5"	3.5"
Maximum Slump with HRWR	8"	8"
Air Content (upon discharge into forms)	5 + 2%	5 + 2%

Page 10-151, Article 1080-4 Inspection and Sampling, lines 18-22, replace (B), (C) and (D) with the following:

(B) At least 3 panels prepared as specified in 5.5.10 of AASHTO M 300, Bullet Hole Immersion Test.

(C) At least 3 panels of 4"x6"x1/4" for the Elcometer Adhesion Pull Off Test, ASTM D4541.

(D) A certified test report from an approved independent testing laboratory for the Salt Fog Resistance Test, Cyclic Weathering Resistance Test, and Bullet Hole Immersion Test as specified in AASHTO M 300.

(E) A certified test report from an approved independent testing laboratory that the product has been tested for slip coefficient and meets AASHTO M253, Class B.

Page 10-162, Subarticle 1081-1(A) Classifications, lines 4-7, delete the second and third sentences of the description for Type 3A.

Page 10-161, Subarticle 1081-1(A) Classifications, lines 29-33, delete first 3 sentences of the description for Type 2 and replace with the following:

Type 2 - A low-modulus, general-purpose adhesive used in epoxy mortar repairs. It may be used to patch spalled, cracked or broken concrete where vibration, shock or expansion and contraction are expected.

Page 10-162, Subarticle 1081-1(B) Requirements, lines 26-30, replace the second paragraph with the following:

For epoxy resin systems used for embedding dowel bars, threaded rods, rebar, anchor bolts and other fixtures in hardened concrete, the manufacturer shall submit test results showing that the bonding system will obtain 125% of the specified required yield strength of the fixture. Furnish certification that, for the particular bolt grade, diameter and embedment depth required, the

anchor system will not fail by adhesive failure and that there is no movement of the anchor bolt. For certification and anchorage, use 3,000 psi as the minimum Portland cement concrete compressive strength used in this test. Use adhesives that meet Section 1081.

List the properties of the adhesive on the container and include density, minimum and maximum temperature application, setting time, shelf life, pot life, shear strength and compressive strength.

Page 10-169, Subarticle 1081-3(G) Anchor Bolt Adhesives, delete this subarticle.

Page 10-173, Article 1084-2 STEEL SHEET PILES, lines 37-38, replace first paragraph with the following:

Steel sheet piles detailed for permanent applications shall be hot rolled and meet ASTM A572 or ASTM A690 unless otherwise required by the plans. Steel sheet piles shall be coated as required by the plans. Galvanized sheet piles shall be coated in accordance with Section 1076. Metallized sheet piles shall be metallized in accordance to the Project Special Provision "Thermal Sprayed Coatings (Metallization)" with an 8 mil, 99.9% aluminum alloy coating and a 0.5 mil seal coating. Any portion of the metallized sheet piling encased in concrete shall receive a barrier coat. The barrier coat shall be an approved waterborne coating with a low-viscosity which readily absorbs into the pores of the aluminum thermal sprayed coating. The waterborne coating shall be applied at a spreading rate that results in a theoretical 1.5 mil dry film thickness. The manufacturer shall issue a letter of certification that the resin chemistry of the waterborne coating is compatible with the 99.9% aluminum thermal sprayed alloy and suitable for tidal water applications.

Page 10-179, Subarticle 1087-4(A) Composition, lines 39-41, replace the third paragraph with the following:

All intermixed and drop-on glass beads shall not contain more than 75 ppm arsenic or 200 ppm lead.

Page 10-180, Subarticle 1087-4(B) Physical Characteristics, line 8, replace the second paragraph with the following:

All intermixed and drop-on glass beads shall comply with NCGS § 136-30.2 and 23 USC § 109(r).

Page 10-181, Subarticle 1087-7(A) Intermixed and Drop-on Glass Beads, line 24, add the following after the first paragraph:

Use X-ray Fluorescence for the normal sampling procedure for intermixed and drop-on beads, without crushing, to check for any levels of arsenic and lead. If any arsenic or lead is detected, the sample shall be crushed and repeat the test using X-ray Fluorescence. If the X-ray Fluorescence test shows more than a LOD of 5 ppm, test the beads using United States Environmental Protection Agency Method 6010B, 6010C or 3052 for no more than 75 ppm arsenic or 200 ppm lead.

Page 10-204, Subarticle 1092-2(A) Performance and Test Requirements, replace **Table 1092-3 Minimum Coefficient of Retroreflection for NC Grade A** with the following:

TABLE 1092-3 MINIMUM COEFFICIENT OF RETROREFLECTION FOR NC GRADE A (Candelas Per Lux Per Square Meter)								
Observation Angle, degrees	**Entrance Angle, degrees**	**White**	**Yellow**	**Green**	**Red**	**Blue**	**Fluorescent Yellow Green**	**Fluorescent Yellow**
0.2	-4.0	525	395	52	95	30	420	315
0.2	30.0	215	162	22	43	10	170	130
0.5	-4.0	310	230	31	56	18	245	185
0.5	30.0	135	100	14	27	6	110	81
1.0	-4.0	**120**	60	8	16	3.6	64	48
1.0	30.0	45	34	4.5	9	2	36	27

PROJECT SPECIAL PROVISIONS
TRAFFIC CONTROL AND WORK ZONE SAFETY

The Contractor will be required to give the Engineer a minimum of two (2) weeks written notice before starting work. The Contractor will be responsible for erection and maintenance of all traffic control devices as shown on **Standard Drawing No. 1101.03, Sheet 1 of 9**. The Department will be responsible for erection and maintenance of all other traffic control devices.

The Contractor shall utilize complete and proper traffic controls and traffic control devices during all operations. All traffic control and traffic control devices required for any operation shall be functional and in place prior to the commencement of that operation. Signs for temporary operations shall be removed during periods of inactivity.

In accordance with Article 107-21 of the Standard Specifications, the Contractor shall comply with all applicable Federal, State, and local laws, ordinances, and regulations governing safety, health, and sanitation, and shall provide all safeguards, safety devices, and protective equipment, and shall take any other needed actions, on his own responsibility that are reasonably necessary to protect the life and health of employees on the job and the safety of the public, and to protect property in connection with the performance of the work covered by the contract.

Failure to comply with any of the requirements for safety and traffic control of this contract shall result in suspension of work as provided in subarticle 108-7(B) of the Standard Specifications.

No additional compensation will be provided for meeting the requirements of this section on "Traffic Control and Work Zone Safety" as these requirements will be considered incidental to other contract bid items.

PROJECT SPECIAL PROVISIONS

EROSION CONTROL – LIBR PROJECTS (DIV. 4)
(6-4-13)

STABILIZATION REQUIREMENTS:
(11-4-11) S-1

Stabilization for this project shall comply with the time frame guidelines as specified by the NCG-010000 general construction permit effective August 3, 2011 issued by the North Carolina Department of Environment and Natural Resources Division of Water Quality. **Temporary or permanent ground cover stabilization shall occur within 7 calendar days from the last land-disturbing activity**, with the following exceptions in which temporary or permanent ground cover shall be provided in 14 calendar days from the last land-disturbing activity:

- Slopes between 2:1 and 3:1, with a slope length of 10 ft. or less
- Slopes 3:1 or flatter, with a slope of length of 50 ft. or less
- Slopes 4:1 or flatter

The stabilization timeframe for High Quality Water (HQW) Zones shall be 7 calendar days with no exceptions for slope grades or lengths. High Quality Water Zones (HQW) Zones are defined by North Carolina Administrative Code 15A NCAC 04A.0105 (25). Temporary and permanent ground cover stabilization shall be achieved in accordance with the provisions in this contract and as directed.

SEEDING AND MULCHING: (East)

The kinds of seed and fertilizer, and the rates of application of seed, fertilizer, and limestone, shall be as stated below. During periods of overlapping dates, the kind of seed to be used shall be determined. All rates are in pounds per acre.

All Roadway Areas

March 1 - August 31		**September 1 - February 28**	
50#	Tall Fescue	50#	Tall Fescue
10#	Centipede	10#	Centipede
25#	Bermudagrass (hulled)	35#	Bermudagrass (unhulled)
500#	Fertilizer	500#	Fertilizer
4000#	Limestone	4000#	Limestone

Waste and Borrow Locations

March 1 – August 31		**September 1 - February 28**	
75#	Tall Fescue	75#	Tall Fescue
25#	Bermudagrass (hulled)	35#	Bermudagrass (unhulled)
500#	Fertilizer	500#	Fertilizer
4000#	Limestone	4000#	Limestone

Note: 50# of Bahiagrass may be substituted for either Centipede or Bermudagrass only upon Engineer's request.

Approved Tall Fescue Cultivars

2nd Millennium	Duster	Magellan	Rendition
Avenger	Endeavor	Masterpiece	Scorpion
Barlexas	Escalade	Matador	Shelby
Barlexas II	Falcon II, III, IV & V	Matador GT	Signia
Barrera	Fidelity	Millennium	Silverstar
Barrington	Finesse II	Montauk	Southern Choice II
Biltmore	Firebird	Mustang 3	Stetson
Bingo	Focus	Olympic Gold	Tarheel
Bravo	Grande II	Padre	Titan Ltd
Cayenne	Greenkeeper	Paraiso	Titanium
Chapel Hill	Greystone	Picasso	Tomahawk
Chesapeake	Inferno	Piedmont	Tacer
Constitution	Justice	Pure Gold	Trooper
Chipper	Jaguar 3	Prospect	Turbo
Coronado	Kalahari	Quest	Ultimate
Coyote	Kentucky 31	Rebel Exeda	Watchdog
Davinci	Kitty Hawk	Rebel Sentry	Wolfpack
Dynasty	Kitty Hawk 2000	Regiment II	
Dominion	Lexington	Rembrandt	

On cut and fill slopes 2:1 or steeper Centipede shall be applied at the rate of 5 pounds per acre and add 20# of Sericea Lespedeza from January 1 - December 31.

Fertilizer shall be 10-20-20 analysis. A different analysis of fertilizer may be used provided the 1-2-2 ratio is maintained and the rate of application adjusted to provide the same amount of plant food as a 10-20-20 analysis and as directed.

Payment for "Seeding and Mulching" will be included in the bid price for *Erosion Control*. This price shall be full compensation for all materials, tools, equipment, labor, and for all incidentals necessary to complete the work.

NATIVE GRASS SEEDING & MULCHING

Native Grass Seeding and Mulching shall be performed on the disturbed areas of wetlands and riparian areas, and adjacent to Stream Relocation construction within a 50 foot zone on both sides of the stream or depression, measured from top of stream bank or center of depression. The stream bank of the stream relocation shall be seeded by a method that does not alter the typical cross section of the stream bank. Native Grass Seeding and Mulching shall also be performed in the permanent soil reinforcement mat section of preformed scour holes, and in other areas as directed.

The kinds of seed and fertilizer, and the rates of application of seed, fertilizer, and limestone, shall be as stated below. During periods of overlapping dates, the kind of seed to be used shall be determined. All rates are in pounds per acre.

March 1 - August 31		**September 1 - February 28**	
18#	Creeping Red Fescue	18#	Creeping Red Fescue
6#	Indiangrass	6#	Indiangrass
8#	Little Bluestem	8#	Little Bluestem
4#	Switchgrass	4#	Switchgrass
25#	Browntop Millet	35#	Rye Grain
500#	Fertilizer	500#	Fertilizer
4000#	Limestone	4000#	Limestone

Approved Creeping Red Fescue Cultivars:

Aberdeen Boreal Epic Cindy Lou

Fertilizer shall be 10-20-20 analysis. A different analysis of fertilizer may be used provided the 1-2-2 ratio is maintained and the rate of application adjusted to provide the same amount of plant food as a 10-20-20 analysis and as directed.

Native Grass Seeding and Mulching shall be performed in accordance with Section 1660 of the *Standard Specifications* and vegetative cover sufficient to restrain erosion shall be installed immediately following grade establishment.

All areas seeded and mulched shall be tacked with asphalt. Crimping of straw in lieu of asphalt tack shall not be allowed on this project.

Payment for "Native Grass Seeding & Mulching" will be included in the bid price for *Erosion Control*. This price shall be full compensation for all materials, tools, equipment, labor, and for all incidentals necessary to complete the work.

CRIMPING STRAW MULCH:

Crimping shall be required on this project adjacent to any section of roadway where traffic is to be maintained or allowed during construction. In areas within six feet of the edge of pavement, straw is to be applied and then crimped. After the crimping operation is complete, an additional application of straw shall be applied and immediately tacked with a sufficient amount of undiluted emulsified asphalt.

Straw mulch shall be of sufficient length and quality to withstand the crimping operation.

Crimping equipment including power source shall be subject to the approval of the Engineer providing that maximum spacing of crimper blades shall not exceed 8".

TEMPORARY SILT FENCE:

Installation of *Temporary Silt Fence* shall conform to the requirements of Section 1605-1 through Section 1605-4 of the *Standard Specifications.* Payment for "Temporary Silt Fence" will be included in the bid price for *Erosion Control*. This price shall be full compensation for all materials, tools, equipment, labor, and for all incidentals necessary to complete the work.

SPECIAL SEDIMENT CONTROL FENCE:

Description

This work consists of furnishing materials, and the construction, maintenance, and removal of S*pecial Sediment Control Fence*. Place special sediment control fence as shown on the plans or as directed.

Materials

(A) Posts

Steel posts shall be at least 5 ft. in length, approximately 1 3/8" wide measured parallel to the fence, and have a minimum weight of 1.25 lb/ft of length. The post shall be equipped with an anchor plate having a minimum area of 14.0 square inches, and shall have a means of retaining wire in the desired position without displacement.

(B) ¼" Hardware Cloth

Hardware cloth shall have ¼" openings constructed from #24 gauge wire. Install hardware cloth in accordance with Standard Drawing No. 1606.01.

(C) Sediment Control Stone

Sediment Control Stone shall meet the requirements of Section 1005 of the *Standard Specifications*. Install stone in accordance with Standard Drawing No. 1606.01.

Construction Methods

The Contractor shall maintain the special sediment control fence until the project is accepted or until the fence is removed, and shall remove and dispose of silt accumulations at the fence when so directed in accordance with the requirements of Section 1630 of the *Standard Specifications*.

Payment for "Special Sediment Control Fence" will be included in the bid price for *Erosion Control*. This price shall be full compensation for all materials, tools, equipment, labor, and for all incidentals necessary to complete the work.

TEMPORARY MULCHING:

Installation of *Temporary Mulching* shall conform to the requirements of Section 1615-1 through Section 1615-3 of the *Standard Specifications.* Payment for "Temporary Mulching" will be included in the bid price for *Erosion Control*. This price shall be full compensation for all materials, tools, equipment, labor, and for all incidentals necessary to complete the work.

TEMPORARY SEEDING:

Fertilizer shall be the same analysis as specified for *Seeding and Mulching* and applied at the rate of 400 pounds and seeded at the rate of 50 pounds per acre. Sweet Sudan Grass, German Millet or Browntop Millet shall be used in summer months and Rye Grain during the remainder of the year. The Engineer will determine the exact dates for using each kind of seed.

Payment for "Temporary Seeding" will be included in the bid price for *Erosion Control*. This price shall be full compensation for all materials, tools, equipment, labor, and for all incidentals necessary to complete the work.

FERTILIZER FOR TEMPORARY SEEDING:

Fertilizer for Temporary Seeding shall conform to the requirements of Section 1620-1 through Section 1620-3 of the *Standard Specifications.* Payment for "Fertilizer - Temporary Seeding" will be included in the bid price for *Erosion Control*. This price shall be full compensation for all materials, tools, equipment, labor, and for all incidentals necessary to complete the work.

MATTING FOR EROSION CONTROL:

Installation of *Matting for Erosion Control* shall conform to the requirements of Section 1631-1 through Section 1631-3 of the *Standard Specifications.* **Matting will be required on all disturbed slopes.** Payment for "Matting for Erosion Control" will be included in the bid price for *Erosion Control*. This price shall be full compensation for all materials, tools, equipment, labor, and for all incidentals necessary to complete the work.

FERTILIZER TOPDRESSING:

Fertilizer used for topdressing on all roadway areas except slopes 2:1 and steeper shall be 10-20-20 grade and shall be applied at the rate of 500 pounds per acre. A different analysis of fertilizer may be used provided the 1-2-2 ratio is maintained and the rate of application adjusted to provide the same amount of plant food as 10-20-20 analysis and as directed.

Fertilizer used for topdressing on slopes 2:1 and steeper and waste and borrow areas shall be 16-8-8 grade and shall be applied at the rate of 500 pounds per acre. A different analysis of fertilizer may be used provided the 2-1-1 ratio is maintained and the rate of application adjusted to provide the same amount of plant food as 16-8-8 analysis and as directed.

Payment for "Fertilizer Topdressing" will be included in the bid price for *Erosion Control*. This price shall be full compensation for all materials, tools, equipment, labor, and for all incidentals necessary to complete the work.

SUPPLEMENTAL SEEDING:

The kinds of seed and proportions shall be the same as specified for *Seeding and Mulching*, with the exception that no centipede seed will be used in the seed mix for supplemental seeding. The rate of application for supplemental seeding may vary from 25# to 75# per acre. The actual rate per acre will be determined prior to the time of topdressing and the Contractor will be notified in writing of the rate per acre, total quantity needed, and areas on which to apply the supplemental seed. Minimum tillage equipment, consisting of a sod seeder shall be used for incorporating seed into the soil as to prevent disturbance of existing vegetation. A clodbuster (ball and chain) may be used where degree of slope prevents the use of a sod seeder.

Payment for "Supplemental Seeding" will be included in the bid price for *Erosion Control*. This price shall be full compensation for all materials, tools, equipment, labor, and for all incidentals necessary to complete the work.

REPAIR SEEDING:

Repair Seeding shall conform to the requirements of Section 1661-1 through Section 1661-4 of the *Standard Specifications*. Payment for "Repair Seeding" will be included in the bid price for *Erosion Control*. This price shall be full compensation for all materials, tools, equipment, labor, and for all incidentals necessary to complete the work.

FERTILIZER FOR REPAIR SEEDING:

Fertilizer for Repair Seeding shall conform to the requirements of Section 1661-1 through Section 1661-4 of the *Standard Specifications*. Payment for "Fertilizer - Repair Seeding" will be included in the bid price for *Erosion Control*. This price shall be full compensation for all materials, tools, equipment, labor, and for all incidentals necessary to complete the work.

REFORESTATION:

Description

Reforestation will be planted in areas as directed. *Reforestation* is not shown on the plan sheets. See the Reforestation Detail Sheet.

All non-maintained riparian buffers impacted by the placement of temporary fill or clearing activities shall be restored to the preconstruction contours and revegetated with native woody species.

The entire *Reforestation* operation shall comply with the requirements of Section 1670 of the *Standard Specifications*.

Materials

Reforestation shall be bare root seedlings 12"-18" tall.

Construction Methods

Reforestation shall be shall be planted as soon as practical following permanent S*eeding and Mulching*. The seedlings shall be planted in a 16-foot wide swath adjacent to mowing pattern line, or as directed.

Root dip: The roots of reforestation seedlings shall be coated with a slurry of water, and either a fine clay (kaolin) or a superabsorbent that is designated as a bare root dip. The type, mixture ratio, method of application, and the time of application shall be submitted to the Engineer for approval.

With the approval of the Engineer, seedlings may be coated before delivery to the job or at the time of planting, but at no time shall the roots of the seedlings be allowed to dry out. The roots shall be moistened immediately prior to planting.

Seasonal Limitations: *Reforestation* shall be planted from November 15 through March 15.

Measurement and Payment

Reforestation will be measured and paid for in accordance with Article 1670-17 of the *Standard Specifications*.

RESPONSE FOR EROSION CONTROL:

Description

Furnish the labor, materials, tools and equipment necessary to move personnel, equipment, and supplies to the project necessary for the pursuit of any or all of the following work as shown herein, by an approved subcontractor.

Section	Erosion Control Item	Unit
1605	Temporary Silt Fence	LF
SP	Special Sediment Control Fence	LF, TON
1615	Temporary Mulching	ACR
1620	Seed - Temporary Seeding	LB
1620	Fertilizer - Temporary Seeding	TON
1631	Matting for Erosion Control	SY
SP	Coir Fiber Mat	SY
SP	Wattles With Polyacrylamide (Pam)	LF
SP	Wattle Barrier	LF

SP	Floating Turbidity Curtain	SY
1660	Seeding and Mulching	ACR
1660	Native Grass Seeding & Mulching	ACR
1661	Seed - Repair Seeding	LB
1661	Fertilizer - Repair Seeding	TON
1662	Seed - Supplemental Seeding	LB
1665	Fertilizer Topdressing	TON
SP	Safety/Highly Visible Fencing	LF
SP	Response for Erosion Control	EA

Construction Methods

Provide an approved subcontractor who performs an erosion control action as described in Form 1675. Each erosion control action may include one or more of the above work items.

Measurement and Payment

Response for Erosion Control will be measured and paid for by counting the actual number of times the subcontractor moves onto the project, including borrow and waste sites, and satisfactorily completes an erosion control action described in Form 1675. The provisions of Article 104-5 of the *Standard Specifications* will not apply to this item of work.

Payment will be made under:

Pay Item	**Pay Unit**
Response for Erosion Control	Each

<u>ENVIRONMENTALLY SENSITIVE AREAS:</u>

Description

This project is located in an *Environmentally Sensitive Area*. This designation requires special procedures to be used for clearing and grubbing, temporary stream crossings, and grading operations within the Environmentally Sensitive Areas identified on the plans and as designated by the Engineer. This also requires special procedures to be used for seeding and mulching and staged seeding within the project.

The Environmentally Sensitive Area shall be defined as a 50-foot buffer zone on both sides of the stream or depression measured from top of streambank or center of depression.

Construction Methods

(A) Clearing and Grubbing

In areas identified as Environmentally Sensitive Areas, the Contractor may perform clearing operations, but not grubbing operations until immediately prior to beginning grading operations as described in Article 200-1 of the *Standard Specifications*. Only clearing operations (not grubbing) shall be allowed in this buffer zone until immediately prior to beginning grading operations. Erosion control devices shall be installed immediately following the clearing operation.

(B) Grading

Once grading operations begin in identified Environmentally Sensitive Areas, work shall progress in a continuous manner until complete. All construction within these areas shall progress in a continuous manner such that each phase is complete and areas are permanently stabilized prior to beginning of next phase. Failure on the part of the Contractor to complete any phase of construction in a continuous manner in Environmentally Sensitive Areas will be just cause for the Engineer to direct the suspension of work in accordance with Article 108-7 of the *Standard Specifications*.

(C) Temporary Stream Crossings

Any crossing of streams within the limits of this project shall be accomplished in accordance with the requirements of Subarticle 107-12(B) of the *Standard Specifications*.

(D) Seeding and Mulching

Seeding and mulching shall be performed in accordance with Section 1660 of the *Standard Specifications* and vegetative cover sufficient to restrain erosion shall be installed immediately following grade establishment.

Seeding and mulching shall be performed on the areas disturbed by construction immediately following final grade establishment. No appreciable time shall lapse into the contract time without stabilization of slopes, ditches and other areas within the Environmentally Sensitive Areas.

(E) Stage Seeding

The work covered by this section shall consist of the establishment of a vegetative cover on cut and fill slopes as grading progresses. Seeding and mulching shall be done in stages on cut and fill slopes that are greater than 20 feet in height measured along the slope, or greater than 2 acres in area. Each stage shall not exceed the limits stated above.

No separate payment will be made for work covered under “Environmentally Sensitive Areas” as this work will be considered incidental to the other items in the contract.

MINIMIZE REMOVAL OF VEGETATION:

The Contractor shall minimize removal of vegetation at stream banks and disturbed areas within the project limits as directed.

STOCKPILE AREAS:

The Contractor shall install and maintain erosion control devices sufficient to contain sediment around any erodible material stockpile areas as directed.

ACCESS AND HAUL ROADS:

At the end of each working day, the Contractor shall install or re-establish temporary diversions or earth berms across access/haul roads to direct runoff into sediment devices. Silt fence sections that are temporarily removed shall be reinstalled across access/haul roads at the end of each working day.

WASTE AND BORROW SOURCES:

Payment for temporary erosion control measures, except those made necessary by the Contractor's own negligence or for his own convenience, will be paid for at the appropriate contract unit price for the devices or measures utilized in borrow sources and waste areas.

No additional payment will be made for erosion control devices or permanent seeding and mulching in any commercial borrow or waste pit. All erosion and sediment control practices that may be required on a commercial borrow or waste site will be done at the Contractor's expense.

All offsite Staging Areas, Borrow and Waste sites shall be in accordance with "Borrow and Waste Site Reclamation Procedures for Contracted Projects" located at:

http://www.ncdot.gov/doh/operations/dp_chief_eng/roadside/fieldops/downloads/Files/ContractedReclamationProcedures.pdf

All forms and documents referenced in the "Borrow and Waste Site Reclamation Procedures for Contracted Projects" shall be included with the reclamation plans for offsite staging areas, and borrow and waste sites.

SAFETY FENCE AND JURISDICTIONAL FLAGGING:

Description

Safety Fence shall consist of furnishing materials, installing and maintaining polyethylene or polypropylene fence along the outside riparian buffer, wetland, or water boundary, or other boundaries located within the construction corridor to mark the areas that have been approved to infringe within the buffer, wetland, endangered vegetation, culturally sensitive areas or water. The fence shall be installed prior to any land disturbing activities.

Interior boundaries for jurisdictional areas noted above shall be delineated by stakes and highly visible flagging.

Jurisdictional boundaries at staging areas, waste sites, or borrow pits, whether considered outside or interior boundaries shall be delineated by stakes and highly visible flagging.

Materials

(A) Safety Fencing

Polyethylene or polypropylene fence shall be a highly visible preconstructed safety fence approved by the Engineer. The fence material shall have an ultraviolet coating.

Either wood posts or steel posts may be used. Wood posts shall be hardwood with a wedge or pencil tip at one end, and shall be at least 5 ft. in length with a minimum nominal 2" x 2" cross section. Steel posts shall be at least 5 ft. in length, and have a minimum weight of 0.85 lb/ft of length.

(B) Boundary Flagging

Wooden stakes shall be 4 feet in length with a minimum nominal 3/4" x 1-3/4" cross section. The flagging shall be at least 1" in width. The flagging material shall be vinyl and shall be orange in color and highly visible.

Construction Methods

No additional clearing and grubbing is anticipated for the installation of this fence. The fence shall be erected to conform to the general contour of the ground.

(A) Safety Fencing

Posts shall be set at a maximum spacing of 10 ft., maintained in a vertical position and hand set or set with a post driver. If hand set, all backfill material shall be thoroughly tamped. Wood posts may be sharpened to a dull point if power driven. Posts damaged by power driving shall be removed and replaced prior to final acceptance. The tops of all wood posts shall be cut at a 30-degree angle. The wood posts may, at the option of the Contractor, be cut at this angle either before or after the posts are erected.

The fence geotextile shall be attached to the wood posts with one 2" galvanized wire staple across each cable or to the steel posts with wire or other acceptable means.

Place construction stakes to establish the location of the safety fence in accordance with Article 105-9 or Article 801-1 of the *Standard Specifications*. No direct pay will be made for the staking of the safety fence. All stakeouts for safety fence shall be considered incidental to the work being paid for as "Construction Surveying", except that where there is no pay item for construction surveying, all safety fence stakeout will be performed by state forces.

The Contractor shall be required to maintain the safety fence in a satisfactory condition for the duration of the project as determined by the Engineer.

(B) Boundary Flagging

Boundary flagging delineation of interior boundaries shall consist of wooden stakes on 25 feet maximum intervals with highly visible orange flagging attached. Stakes shall be installed a minimum of 6" into the ground. Interior boundaries may be staked on a tangent that runs parallel to buffer but must not encroach on the buffer at any location. Interior boundaries of hand clearing shall be identified with a different colored flagging to distinguish it from mechanized clearing.

Boundary flagging delineation of interior boundaries will be placed in accordance with Article 105-9 or Article 801-1 of the *Standard Specifications*. No direct pay will be made for delineation of the interior boundaries. This delineation will be considered incidental to the work being paid for as *Construction Surveying*, except that where there is no pay item or construction surveying the cost of boundary flagging delineation shall be included in the unit prices bid for the various items in the contract. Installation for delineation of all jurisdictional boundaries at staging areas, waste sites, or borrow pits shall consist of wooden stakes on 25 feet maximum intervals with highly visible orange flagging attached. Stakes shall be installed a minimum of 6" into the ground. Additional flagging may be placed on overhanging vegetation to enhance visibility but does not substitute for installation of stakes.

Installation of boundary flagging for delineation of all jurisdictional boundaries at staging areas, waste sites, or borrow pits shall be performed in accordance with Subarticle 230-4(B)(3)(d) or Subarticle 802-2(F) of the *Standard Specifications*. No direct pay will be made for this delineation, as the cost of same shall be included in the unit prices bid for the various items in the contract.

The Contractor shall be required to maintain alternative stakes and highly visible flagging in a satisfactory condition for the duration of the project as determined by the Engineer.

Measurement and Payment

Safety Fence will be measured and paid as the actual number of linear feet of polyethylene or polypropylene fence installed in place and accepted. Such payment will be full compensation including but not limited to furnishing and installing fence geotextile with necessary posts and post bracing, staples, tie wires, tools, equipment and incidentals necessary to complete this work.

Payment will be made under:

Pay Item	**Pay Unit**
Safety Fence	Linear Foot

<u>SKIMMER BASIN WITH BAFFLES:</u>

Description

Provide a skimmer basin to remove sediment from construction site runoff at locations shown in the erosion control plans. See the Skimmer Basin with Baffles Detail sheet provided in the

erosion control plans. Work includes constructing sediment basin, installation of temporary slope drain pipe and coir fiber baffles, furnishing, installation and cleanout of skimmer, providing and placing stone pad on bottom of basin underneath skimmer device, providing and placing a geotextile spillway liner, providing coir fiber mat stabilization for the skimmer outlet, disposing of excess materials, removing temporary slope drain, coir fiber baffles, geotextile liner and skimmer device, backfilling basin area with suitable material and providing proper drainage when basin area is abandoned.

Materials

Item	**Section**
Stone for Erosion Control, Class B	1042
Geotextile for Soil Stabilization, Type 4	1056
Fertilizer for Temporary Seeding	1060-2
Seed for Temporary Seeding	1060-4
Seeding and Mulching	1060-4
Matting for Erosion Control	1060-8
Staples	1060-8
Coir Fiber Mat	1060-14
Temporary Slope Drain	1622-2
Coir Fiber Baffle	1640

Provide appropriately sized and approved skimmer device.

Provide Schedule 40 PVC pipe with a length of 6 ft. to attach to the skimmer and the coupling connection to serve as the arm pipe. For skimmer sizes of 2.5 in. and smaller, the arm pipe diameter shall be 1.5 inches. For skimmer sizes of 3 in. and larger, refer to manufacturer recommendation.

Provide 4” diameter Schedule 40 PVC pipe to attach to coupling connection of skimmer to serve as the barrel pipe through the earthen dam.

Anchors: Staples, stakes, or reinforcement bars shall be used as anchors.

Wooden Stakes:

Provide hardwood stakes 12"- 24" long with a 2" x 2" nominal square cross section. One end of the stake must be sharpened or beveled to facilitate driving through the coir fiber mat and down into the underlying soil. The other end of the stake needs to have a 1"- 2" long head at the top with a 1"- 2" notch following to catch and secure the coir fiber mat.

Steel Reinforcement Bars:

Provide uncoated #10 steel reinforcement bars 24" nominal length. The bars shall have a 4" diameter bend at one end with a 4" straight section at the tip to catch and secure the coir fiber mat.

Staples:

Provide staples made of 0.125" diameter new steel wire formed into a *u* shape not less than 12" in length with a throat of 1" in width.

Construction Methods

Excavate basin according to the erosion control plans with basin surface free of obstructions, debris, and pockets of low-density material. Install temporary slope drain pipe and construct the primary spillway according to the Skimmer Basin with Baffles Detail sheet in the erosion control plans. Temporary slope drain pipe at inlet of basin may be replaced by geotextile as directed. Construct the coir fiber baffles according to *Roadway Standard Drawings* No. 1640.01 and Section 1640 of the *Standard Specifications*.

Install skimmer device according to manufacturer recommendations. Install 4” Schedule 40 PVC pipe into dam on the lower side of basin 1 ft. from the bottom of the basin and according to the detail, and extend the pipe so the basin will drain. Attach a 6 ft. arm pipe to the coupling connection and skimmer according to manufacturer recommendations. Attach the rope included with the skimmer to the tee between the vent socket and the tube inlet, and the other end to a wooden stake or metal post. Clean out skimmer device when it becomes clogged with sediment and/or debris and is unable to float at the top of water in skimmer basin. Take appropriate measures to avoid ice accumulation in the skimmer device. Construct a stone pad of Class B stone directly underneath the skimmer device at bottom of basin. The pad shall be a minimum of 12” in height, and shall have a minimum cross sectional area of 4 ft. by 4 ft.

Line primary spillway with geotextile unrolled in the direction of flow and lay smoothly but loosely on soil surface without creases. Bury edges of geotextile in a trench at least 5" deep and tamp firmly. If geotextile for the primary spillway is not one continuous piece of material, make horizontal overlaps a minimum of 18" with upstream geotextile overlapping the downstream geotextile. Secure geotextile with eleven gauge wire staples shaped into a *u* shape with a length of not less than 12" and a throat not less than 1" in width. Place staples along outer edges and throughout the geotextile a maximum of 3 ft. horizontally and vertically. Geotextile shall be placed to the bottom and across the entire width of the basin according to the Skimmer Basin with Baffles detail. Place sealant inside basin around barrel pipe on top of geotextile with a minimum width of 6 in.

At the skimmer outlet, provide a smooth soil surface free from stones, clods, or debris that will prevent contact of the coir fiber matting with the soil. Unroll the matting and apply without stretching such that it will lie smoothly but loosely on the soil surface. Wooden stakes, reinforcement bars, or staples may be used as anchors in accordance with the details in the plans and as directed. Place anchors across the matting at the ends approximately 1 ft. apart. Place anchors along the outer edges and down the center of the matting 3 ft. apart.

All bare side slope sections of the skimmer basin shall be seeded with a temporary or permanent seed mix as directed and in accordance with Articles 1620-3, 1620-4, 1620-5, 1660-4, 1660-5 and 1660-7 of the *Standard Specifications*. Straw or excelsior matting shall be installed on all bare

side slope sections immediately upon the completion of seeding and in accordance with Article 1631-3 of the *Standard Specifications*.

Measurement and Payment

Silt Excavation will be measured and paid for in accordance with Article 1630-4 of the *Standard Specifications*, as calculated from the typical section throughout the length of the basin as shown on the final approved plans.

Geotextile for Soil Stabilization will be measured and paid for in accordance with Article 270-4 of the *Standard Specifications*.

Coir Fiber Baffles will be measured and paid for in accordance with Article 1640-4 of the *Standard Specifications*.

__" Skimmer will be measured in units of each. *__" Skimmer* will be measured and paid for as the maximum number of each size skimmer acceptably installed and in use at any one time during the life of the project. Barrel and arm pipe, cleanout, relocation and reinstallation of *__" Skimmer* is considered incidental to the measurement of the quantity of *__" Skimmer* and no separate payment will be made. No separate payment shall be made if *__" Skimmer*, barrel and/or arm pipe(s) are damaged by ice accumulation.

Coir Fiber Mat will be measured and paid for as the actual number of square yards measured along the surface of the ground over which coir fiber mat is installed and accepted.

Temporary Slope Drain will be measured and paid for in accordance with Article 1622-4 of the *Standard Specifications*.

Stone for Erosion Control, Class __ will be measured and paid for in accordance with Article 1610-4 of the *Standard Specifications*.

Seeding and Mulching, Seed for Temporary Seeding, Fertilizer for Temporary Seeding, Matting for Erosion Control will be included in the bid price for *Erosion Control*. This price shall be full compensation for all materials, tools, equipment, labor, and for all incidentals necessary to complete the work.

No measurement will be made for other items or for over excavation or stockpiling.

Payment will be made under:

Pay Item	**Pay Unit**
__" Skimmer	Each
Coir Fiber Mat	Square Yard

WATTLES WITH POLYACRYLAMIDE (PAM):

Description

Wattles are tubular products consisting of excelsior fibers encased in synthetic netting. Wattles are used on slopes or channels to intercept runoff and act as a velocity break. Wattles are to be placed at locations shown on the plans or as directed. Installation shall follow the detail provided in the plans and as directed. Work includes furnishing materials, installation of wattles, matting installation, PAM application, and removing wattles.

Materials

Wattle shall meet the following specifications:

100% Curled Wood (Excelsior) Fibers	
Minimum Diameter	12 in.
Minimum Density	2.5 lb/ft^3 +/- 10%
Net Material	Synthetic
Net Openings	1 in. x 1 in.
Net Configuration	Totally Encased
Minimum Weight	20 lb. +/- 10% per 10 ft. length

Anchors: Stakes shall be used as anchors.

Wooden Stakes:

Provide hardwood stakes a minimum of 2-ft. long with a 2 in. x 2 in. nominal square cross section. One end of the stake must be sharpened or beveled to facilitate driving down into the underlying soil.

Matting shall meet the requirements of Article 1060-8 of the *Standard Specifications*, or shall meet specifications provided elsewhere in this contract.

Provide staples made of 0.125" diameter new steel wire formed into a *u* shape not less than 12" in length with a throat of 1" in width.

Polyacrylamide (PAM) shall be applied in powder form and shall be anionic or neutrally charged. Soil samples shall be obtained in areas where the wattles will be placed, and from offsite material used to construct the roadway, and analyzed for the appropriate PAM flocculant to be utilized with each wattle. The PAM product used shall be listed on the North Carolina Department of Environment and Natural Resources (NCDENR) Division of Water Quality (DWQ) web site as an approved PAM product for use in North Carolina.

Construction Methods

Wattles shall be secured to the soil by wire staples approximately every 1 linear foot and at the end of each section of wattle. A minimum of 4 stakes shall be installed on the downstream side of the wattle with a maximum spacing of 2 linear feet along the wattle, and according to the detail. Install a minimum of 2 stakes on the upstream side of the wattle according to the detail provided in the plans. Stakes shall be driven into the ground a minimum of 10 in. with no more than 2 in. projecting from the top of the wattle. Drive stakes at an angle according to the detail provided in the plans.

Only install wattle(s) to a height in ditch so flow will not wash around wattle and scour ditch slopes and according to the detail provided in the plans and as directed. Overlap adjoining sections of wattles a minimum of 6 in.

Installation of matting shall be in accordance with the detail provided in the plans, and in accordance with Article 1631-3 of the *Standard Specifications*, or in accordance with specifications provided elsewhere in this contract.

Apply PAM over the lower center portion of the wattle where the water is going to flow over at a rate of 2 ounces per wattle, and 1 ounce of PAM on matting on each side of the wattle. PAM applications shall be done during construction activities after every rainfall event that is equal to or exceeds 0.50 in.

The Contractor shall maintain the wattles until the project is accepted or until the wattles are removed, and shall remove and dispose of silt accumulations at the wattles when so directed in accordance with the requirements of Section 1630 of the *Standard Specifications*.

Measurement and Payment

Payment for "Wattles with Polycrylamide (PAM)" will be included in the bid price for *Erosion Control*. This price shall be full compensation for all materials, tools, equipment, labor, and for all incidentals necessary to complete the work.

WATTLE BARRIER:
(5-20-13) 1630

Description

Wattle barriers are tubular products consisting of excelsior fibers encased in natural or synthetic netting and used at the toe of fills or on slopes to intercept runoff. Wattle barriers are to be placed at locations shown on the plans or as directed. Installation shall follow the detail provided in the plans and as directed. Work includes furnishing materials, installation, maintenance and removing wattle barriers.

Materials

Wattle shall meet the following specifications:

Inner Material	100% Curled Wood (Excelsior) Fibers
Minimum Diameter	18"
Minimum Length	10 ft.
Minimum Density	2.9 lb./c.f.± 10%
Net Material	Synthetic
Net Openings	1" x 1"
Net Configuration	Totally Encased
Minimum Weight	5 lb./ft. ± 10%

Stakes shall be used as anchors. Provide hardwood stakes a minimum of 2-ft long with a 2" x 2" nominal square cross section. One end of the stake shall be sharpened or beveled to facilitate driving down into the underlying soil.

Provide staples made of 0.125" diameter new steel wire formed into a U-shape not less than 12" in length with a throat of 1" in width.

Construction Methods

Align wattle barriers in an overlapping and alternating pattern. Excavate a trench the entire length of each wattle with a depth of 2" to 3" for the wattle to be placed. Secure wattle barriers to the soil by wire staples approximately every linear foot and at the end of each wattle. Install at least 4 stakes on the downslope side of the wattle with a maximum spacing of 2 linear feet~~,~~ and according to the detail. Install at least 2 stakes on the upslope side of the wattle barrier according to the detail provided in the plans. Drive stakes into the ground at least 10" with no more than 2" projecting from the top of the wattle. Drive stakes at an angle according to the detail provided in the plans.

For wattle barriers used to reduce runoff velocity for large slopes, use a maximum spacing of 20 ft for the barrier measured along the slope.

Maintain the wattle barriers until the project is accepted or until the wattle barriers are removed, and remove and dispose of silt accumulations at the wattle barriers when so directed in accordance with Section 1630 of the *2012 Standard Specifications*.

Measurement and Payment

Payment for “Wattle Barrier” will be included in the bid price for *Erosion Control*. This price shall be full compensation for all materials, tools, equipment, labor, and for all incidentals necessary to complete the work.

<u>COIR FIBER MAT:</u>

Description

Furnish material, install and maintain coir fiber mat in locations shown on the plans or in locations as directed. Work includes providing all materials, excavating and backfilling, and placing and securing coir fiber mat with stakes, steel reinforcement bars or staples as directed.

Materials

Item	**Section**
Coir Fiber Mat	1060-14

Anchors: Stakes, reinforcement bars, or staples shall be used as anchors.

Wooden Stakes:

Provide hardwood stakes 12"- 24" long with a 2" x 2" nominal square cross section. One end of the stake must be sharpened or beveled to facilitate driving through the coir fiber mat and down into the underlying soil. The other end of the stake needs to have a 1"- 2" long head at the top with a 1"- 2" notch following to catch and secure the coir fiber mat.

Steel Reinforcement Bars:

Provide uncoated #10 steel reinforcement bars 24" nominal length. The bars shall have a 4" diameter bend at one end with a 4" straight section at the tip to catch and secure the coir fiber mat.

Staples:

Provide staples made of 0.125" diameter new steel wire formed into a *u* shape not less than 12" in length with a throat of 1" in width.

Construction Methods

Place the coir fiber mat immediately upon final grading. Provide a smooth soil surface free from stones, clods, or debris that will prevent the contact of the mat with the soil. Unroll the mat and apply without stretching such that it will lie smoothly but loosely on the soil surface.

For stream relocation applications, take care to preserve the required line, grade, and cross section of the area covered. Bury the top slope end of each piece of mat in a narrow trench at least 6 in. deep and tamp firmly. Where one roll of matting ends and a second roll begins, overlap the end of the upper roll over the buried end of the second roll so there is a 6 in. overlap. Construct check trenches at least 12 in. deep every 50 ft. longitudinally along the edges of the mat or as directed. Fold over and bury mat to the full depth of the trench, close and tamp firmly. Overlap mat at least 6 in. where 2 or more widths of mat are installed side by side.
Place anchors across the mat at the ends approximately 1 ft. apart. Place anchors along the outer edges and down the center of the mat 3 ft. apart.

Adjustments in the trenching or anchoring requirements to fit individual site conditions may be required.

Measurement and Payment

Coir Fiber Mat will be measured and paid for as the actual number of square yards measured along the surface of the ground over which coir fiber mat is installed and accepted.

No measurement will be made for anchor items.

Payment will be made under:

Pay Item	**Pay Unit**
Coir Fiber Mat	Square Yard

FLOATING TURBIDITY CURTAIN:

Description

This work consists of furnishing a *Floating Turbidity Curtain* to deter silt suspension and movement of silt particles during construction. The floating turbidity curtain shall be constructed at locations as required by the permit.

Materials

The curtain material shall be made of a tightly woven nylon, plastic or other non-deteriorating material meeting the following specifications:

Property	**Value**
Grab tensile strength	*md-370 lbs *cd-250 lbs
Mullen burst stength	480 psi
Trapezoid tear strength	*md-100 lbs *cd-60 lbs
Apparent opening size	70 US standard sieve
Percent open area	4% permittivity 0.28 sec-1

*md - machine direction
*cd - cross machine direction

In the event that more than one width of fabric is required, a 6" overlap of the material shall also be required.

The curtain material shall be supported by a flotation material having over 29 lbs/ft buoyancy. The floating curtain shall have a 5/16" galvanized chain as ballast and dual 5/16" galvanized wire ropes with a heavy vinyl coating as load lines.

Construction Methods

The Contractor shall maintain the *Floating Turbidity Curtain* in a satisfactory condition until its removal is requested by the Engineer. The curtain shall extend to the bottom of the jurisdictional resource. Anchor the curtain according to manufacturer recommendations.
A curtain will be required for all work taking place in standing water, including, but not limited to the following activities: installation of drilled piers, driving of piles, and removal of existing structure.

Measurement and Payment

Payment for “Floating Turbidity Curtain” will be included in the bid price for *Erosion Control*. This price shall be full compensation for all materials, tools, equipment, labor, and for all incidentals necessary to complete the work.

Project Special Provisions
Structure

Table of Contents

			Page #
Falsework and Formwork	(4-5-12)	.....	1
Submittal of Working Drawings	(2-10-12)	.....	8
Crane Safety	(8-15-05)	.....	14
Grout for Structures	(9-30-11)	.....	15

NORTH CAROLINA PROFESSIONAL SEAL 42274 ENGINEER OMAR R. AZIZI

6/3/13

PROJECT SPECIAL PROVISIONS
STRUCTURE

PROJECT BD-5104K **NASH COUNTY**

FALSEWORK AND FORMWORK (4-5-12)

1.0 DESCRIPTION

Use this Special Provision as a guide to develop temporary works submittals required by the Standard Specifications or other provisions; no additional submittals are required herein. Such temporary works include, but are not limited to, falsework and formwork.

Falsework is any temporary construction used to support the permanent structure until it becomes self-supporting. Formwork is the temporary structure or mold used to retain plastic or fluid concrete in its designated shape until it hardens. Access scaffolding is a temporary structure that functions as a work platform that supports construction personnel, materials, and tools, but is not intended to support the structure. Scaffolding systems that are used to temporarily support permanent structures (as opposed to functioning as work platforms) are considered to be falsework under the definitions given. Shoring is a component of falsework such as horizontal, vertical, or inclined support members. Where the term "temporary works" is used, it includes all of the temporary facilities used in bridge construction that do not become part of the permanent structure.

Design and construct safe and adequate temporary works that will support all loads imposed and provide the necessary rigidity to achieve the lines and grades shown on the plans in the final structure.

2.0 MATERIALS

Select materials suitable for temporary works; however, select materials that also ensure the safety and quality required by the design assumptions. The Engineer has authority to reject material on the basis of its condition, inappropriate use, safety, or nonconformance with the plans. Clearly identify allowable loads or stresses for all materials or manufactured devices on the plans. Revise the plan and notify the Engineer if any change to materials or material strengths is required.

3.0 DESIGN REQUIREMENTS

A. Working Drawings

Provide working drawings for items as specified in the contract, or as required by the Engineer, with design calculations and supporting data in sufficient detail to permit a structural and safety review of the proposed design of the temporary work.

On the drawings, show all information necessary to allow the design of any component to be checked independently as determined by the Engineer.

When concrete placement is involved, include data such as the drawings of proposed sequence, rate of placement, direction of placement, and location of all construction joints. Submit the number of copies as called for by the contract.

When required, have the drawings and calculations prepared under the guidance of, and sealed by, a North Carolina Registered Professional Engineer who is knowledgeable in temporary works design.

If requested by the Engineer, submit with the working drawings manufacturer's catalog data listing the weight of all construction equipment that will be supported on the temporary work. Show anticipated total settlements and/or deflections of falsework and forms on the working drawings. Include falsework footing settlements, joint take-up, and deflection of beams or girders.

As an option for the Contractor, overhang falsework hangers may be uniformly spaced, at a maximum of 36 inches, provided the following conditions are met:

Member Type (PCG)	Member Depth, (inches)	Max. Overhang Width, (inches)	Max. Slab Edge Thickness, (inches)	Max. Screed Wheel Weight, (lbs.)	Bracket Min. Vertical Leg Extension, (inches)
II	36	39	14	2000	26
III	45	42	14	2000	35
IV	54	45	14	2000	44
MBT	63	51	12	2000	50
MBT	72	55	12	1700	48

Overhang width is measured from the centerline of the girder to the edge of the deck slab.

For Type II, III & IV prestressed concrete girders (PCG), 45-degree cast-in-place half hangers and rods must have a minimum safe working load of 6,000 lbs.

For MBT prestressed concrete girders, 45-degree angle holes for falsework hanger rods shall be cast through the girder top flange and located, measuring along the top of the member, 1'-2 ½" from the edge of the top flange. Hanger hardware and rods must have a minimum safe working load of 6,000 lbs.

The overhang bracket provided for the diagonal leg shall have a minimum safe working load of 3,750 lbs. The vertical leg of the bracket shall extend to the point that the heel bears on the girder bottom flange, no closer than 4 inches from the bottom of the member. However, for 72-inch members, the heel of the bracket shall bear on the web, near the bottom flange transition.

Provide adequate overhang falsework and determine the appropriate adjustments for deck geometry, equipment, casting procedures and casting conditions.

If the optional overhang falsework spacing is used, indicate this on the falsework submittal and advise the girder producer of the proposed details. Failure to notify the Engineer of hanger type and hanger spacing on prestressed concrete girder casting drawings may delay the approval of those drawings.

Falsework hangers that support concentrated loads and are installed at the edge of thin top flange concrete girders (such as bulb tee girders) shall be spaced so as not to exceed 75% of the manufacturer's stated safe working load. Use of dual leg hangers (such as Meadow Burke HF-42 and HF-43) are not allowed on concrete girders with thin top flanges. Design the falsework and forms supporting deck slabs and overhangs on girder bridges so that there will be no differential settlement between the girders and the deck forms during placement of deck concrete.

When staged construction of the bridge deck is required, detail falsework and forms for screed and fluid concrete loads to be independent of any previous deck pour components when the mid-span girder deflection due to deck weight is greater than ¾".

Note on the working drawings any anchorages, connectors, inserts, steel sleeves or other such devices used as part of the falsework or formwork that remains in the permanent structure. If the plan notes indicate that the structure contains the necessary corrosion protection required for a Corrosive Site, epoxy coat, galvanize or metalize these devices. Electroplating will not be allowed. Any coating required by the Engineer will be considered incidental to the various pay items requiring temporary works.

Design falsework and formwork requiring submittals in accordance with the 1995 AASHTO *Guide Design Specifications for Bridge Temporary Works* except as noted herein.

1. Wind Loads

   Table 2.2 of Article 2.2.5.1 is modified to include wind velocities up to 110 mph. In addition, Table 2.2A is included to provide the maximum wind speeds by county in North Carolina.

Table 2.2 - Wind Pressure Values

Height Zone feet above ground	Pressure, lb/ft^2 for Indicated Wind Velocity, mph				
	70	80	90	100	110
0 to 30	15	20	25	30	35
30 to 50	20	25	30	35	40
50 to 100	25	30	35	40	45
over 100	30	35	40	45	50

2. Time of Removal

   The following requirements replace those of Article 3.4.8.2.

   Do not remove forms until the concrete has attained strengths required in Article 420-16 of the Standard Specifications and these Special Provisions.

   Do not remove forms until the concrete has sufficient strength to prevent damage to the surface.

Table 2.2A - Steady State Maximum Wind Speeds by Counties in North Carolina

COUNTY	25 YR (mph)	COUNTY	25 YR (mph)	COUNTY	25 YR (mph)
Alamance	70	Franklin	70	Pamlico	100
Alexander	70	Gaston	70	Pasquotank	100
Alleghany	70	Gates	90	Pender	100
Anson	70	Graham	80	Perquimans	100
Ashe	70	Granville	70	Person	70
Avery	70	Greene	80	Pitt	90
Beaufort	100	Guilford	70	Polk	80
Bertie	90	Halifax	80	Randolph	70
Bladen	90	Harnett	70	Richmond	70
Brunswick	100	Haywood	80	Robeson	80
Buncombe	80	Henderson	80	Rockingham	70
Burke	70	Hertford	90	Rowan	70
Cabarrus	70	Hoke	70	Rutherford	70
Caldwell	70	Hyde	110	Sampson	90
Camden	100	Iredell	70	Scotland	70
Carteret	110	Jackson	80	Stanley	70
Caswell	70	Johnston	80	Stokes	70
Catawba	70	Jones	100	Surry	70
Cherokee	80	Lee	70	Swain	80
Chatham	70	Lenoir	90	Transylvania	80
Chowan	90	Lincoln	70	Tyrell	100
Clay	80	Macon	80	Union	70
Cleveland	70	Madison	80	Vance	70
Columbus	90	Martin	90	Wake	70
Craven	100	McDowell	70	Warren	70
Cumberland	80	Mecklenburg	70	Washington	100
Currituck	100	Mitchell	70	Watauga	70
Dare	110	Montgomery	70	Wayne	80
Davidson	70	Moore	70	Wilkes	70
Davie	70	Nash	80	Wilson	80
Duplin	90	New Hanover	100	Yadkin	70
Durham	70	Northampton	80	Yancey	70
Edgecombe	80	Onslow	100		
Forsyth	70	Orange	70		

B. Review and Approval

The Engineer is responsible for the review and approval of temporary works' drawings.

Submit the working drawings sufficiently in advance of proposed use to allow for their review, revision (if needed), and approval without delay to the work.

The time period for review of the working drawings does not begin until complete drawings and design calculations, when required, are received by the Engineer.

Do not start construction of any temporary work for which working drawings are required until the drawings have been approved. Such approval does not relieve the Contractor of the responsibility for the accuracy and adequacy of the working drawings.

4.0 CONSTRUCTION REQUIREMENTS

All requirements of Section 420 of the Standard Specifications apply.

Construct temporary works in conformance with the approved working drawings. Ensure that the quality of materials and workmanship employed is consistent with that assumed in the design of the temporary works. Do not weld falsework members to any portion of the permanent structure unless approved. Show any welding to the permanent structure on the approved construction drawings.

Provide tell-tales attached to the forms and extending to the ground, or other means, for accurate measurement of falsework settlement. Make sure that the anticipated compressive settlement and/or deflection of falsework does not exceed 1 inch. For cast-in-place concrete structures, make sure that the calculated deflection of falsework flexural members does not exceed 1/240 of their span regardless of whether or not the deflection is compensated by camber strips.

A. Maintenance and Inspection

Inspect and maintain the temporary work in an acceptable condition throughout the period of its use. Certify that the manufactured devices have been maintained in a condition to allow them to safely carry their rated loads. Clearly mark each piece so that its capacity can be readily determined at the job site.

Perform an in-depth inspection of an applicable portion(s) of the temporary works, in the presence of the Engineer, not more than 24 hours prior to the beginning of each concrete placement. Inspect other temporary works at least once a month to ensure that they are functioning properly. Have a North Carolina Registered Professional Engineer inspect the cofferdams, shoring, sheathing, support of excavation structures, and support systems for load tests prior to loading.

B. Foundations

Determine the safe bearing capacity of the foundation material on which the supports for temporary works rest. If required by the Engineer, conduct load tests to verify proposed bearing capacity values that are marginal or in other high-risk situations.

The use of the foundation support values shown on the contract plans of the permanent structure is permitted if the foundations are on the same level and on the same soil as those of the permanent structure.

Allow for adequate site drainage or soil protection to prevent soil saturation and washout of the soil supporting the temporary works supports.

If piles are used, the estimation of capacities and later confirmation during construction using standard procedures based on the driving characteristics of the pile is permitted. If preferred, use load tests to confirm the estimated capacities; or, if required by the Engineer conduct load tests to verify bearing capacity values that are marginal or in other high risk situations.

The Engineer reviews and approves the proposed pile and soil bearing capacities.

5.0 REMOVAL

Unless otherwise permitted, remove and keep all temporary works upon completion of the work. Do not disturb or otherwise damage the finished work.

Remove temporary works in conformance with the contract documents. Remove them in such a manner as to permit the structure to uniformly and gradually take the stresses due to its own weight.

6.0 METHOD OF MEASUREMENT

Unless otherwise specified, temporary works will not be directly measured.

7.0 BASIS OF PAYMENT

Payment at the contract unit prices for the various pay items requiring temporary works will be full compensation for the above falsework and formwork.

SUBMITTAL OF WORKING DRAWINGS (2-10-12)

1.0 GENERAL

Submit working drawings in accordance with Article 105-2 of the *Standard Specifications* and this provision. For this provision, "submittals" refers to only those listed in this provision. The list of submittals contained herein does not represent a list of required submittals for the project. Submittals are only necessary for those items as required by the contract. Make submittals that are not specifically noted in this provision directly to the Resident Engineer. Either the Structure Design Unit or the Geotechnical Engineering Unit or both units will jointly review submittals.

If a submittal contains variations from plan details or specifications or significantly affects project cost, field construction or operations, discuss the submittal with and submit all copies to the Resident Engineer. State the reason for the proposed variation in the submittal. To minimize review time, make sure all submittals are complete when initially submitted. Provide a contact name and information with each submittal. Direct any questions regarding submittal requirements to the Resident Engineer, Structure Design Unit contacts or the Geotechnical Engineering Unit contacts noted below.

In order to facilitate in-plant inspection by NCDOT and approval of working drawings, provide the name, address and telephone number of the facility where fabrication will actually be done if different than shown on the title block of the submitted working drawings. This includes, but is not limited to, precast concrete items, prestressed concrete items and fabricated steel or aluminum items.

2.0 ADDRESSES AND CONTACTS

For submittals to the Structure Design Unit, use the following addresses:

Via US mail:

Mr. G. R. Perfetti, P. E.
State Structures Engineer
North Carolina Department
of Transportation
Structures Management Unit
1581 Mail Service Center
Raleigh, NC 27699-1581

Attention: Mr. P. D. Lambert, P. E.

Via other delivery service:

Mr. G. R. Perfetti, P. E.
State Structures Engineer
North Carolina Department
of Transportation
Structures Management Unit
1000 Birch Ridge Drive
Raleigh, NC 27610

Attention: Mr. P. D. Lambert, P. E.

Submittals may also be made via email.

Send submittals to:

plambert@ncdot.gov (Paul Lambert)

Send an additional e-copy of the submittal to the following address:

jgaither@ncdot.gov (James Gaither)

jlbolden@ncdot.gov (James Bolden)

For submittals to the Geotechnical Engineering Unit, use the following addresses:

For projects in Divisions 1-7, use the following Eastern Regional Office address:

Via US mail:

Mr. K. J. Kim, Ph. D., P. E.
Eastern Regional Geotechnical Manager
North Carolina Department of Transportation
Geotechnical Engineering Unit
Eastern Regional Office
1570 Mail Service Center
Raleigh, NC 27699-1570

Via other delivery service:

Mr. K. J. Kim, Ph. D., P. E.
Eastern Regional Geotechnical Manager
North Carolina Department of Transportation
Geotechnical Engineering Unit
Eastern Regional Office
3301 Jones Sausage Road, Suite 100
Garner, NC 27529

For projects in Divisions 8-14, use the following Western Regional Office address:

Via US mail:

Mr. John Pilipchuk, L. G., P. E.
Western Regional Geotechnical Manager
North Carolina Department of Transportation
Geotechnical Engineering Unit
Western Regional Office
5253 Z Max Boulevard
Harrisburg, NC 28075

Via other delivery service:

Mr. John Pilipchuk, L. G., P. E.
Western Region Geotechnical Manager
North Carolina Department of Transportation
Geotechnical Engineering Unit
Western Regional Office
5253 Z Max Boulevard
Harrisburg, NC 28075

The status of the review of structure-related submittals sent to the Structure Design Unit can be viewed from the Unit's web site, via the "Contractor Submittal" link.

Direct any questions concerning submittal review status, review comments or drawing markups to the following contacts:

Primary Structures Contact: Paul Lambert (919) 707 – 6407
(919) 250 – 4082 facsimile
plambert@ncdot.gov

Secondary Structures Contacts: James Gaither (919) 707 – 6409
James Bolden (919) 707 – 6408

Eastern Regional Geotechnical Contact (Divisions 1-7):
K. J. Kim (919) 662 – 4710
(919) 662 – 3095 facsimile
kkim@ncdot.gov

Western Regional Geotechnical Contact (Divisions 8-14):
John Pilipchuk (704) 455 – 8902
(704) 455 – 8912 facsimile
jpilipchuk@ncdot.gov

3.0 SUBMITTAL COPIES

Furnish one complete copy of each submittal, including all attachments, to the Resident Engineer. At the same time, submit the number of hard copies shown below of the same complete submittal directly to the Structure Design Unit and/or the Geotechnical Engineering Unit.

The first table below covers "Structure Submittals". The Resident Engineer will receive review comments and drawing markups for these submittals from the Structure Design Unit. The second table in this section covers "Geotechnical Submittals". The Resident Engineer will receive review comments and drawing markups for these submittals from the Geotechnical Engineering Unit.

Unless otherwise required, submit one set of supporting calculations to either the Structure Design Unit or the Geotechnical Engineering Unit unless both units require submittal copies in which case submit a set of supporting calculations to each unit. Provide additional copies of any submittal as directed.

STRUCTURE SUBMITTALS

Submittal	Copies Required by Structure Design Unit	Copies Required by Geotechnical Engineering Unit	Contract Reference Requiring Submittal [1]
Arch Culvert Falsework	5	0	Plan Note, SN Sheet & "Falsework and Formwork"
Box Culvert Falsework [7]	5	0	Plan Note, SN Sheet & "Falsework and Formwork"
Cofferdams	6	2	Article 410-4

Foam Joint Seals [6]	9	0	"Foam Joint Seals"
Expansion Joint Seals (hold down plate type with base angle)	9	0	"Expansion Joint Seals"
Expansion Joint Seals (modular)	2, then 9	0	"Modular Expansion Joint Seals"
Expansion Joint Seals (strip seals)	9	0	"Strip Seals"
Falsework & Forms [2] (substructure)	8	0	Article 420-3 & "Falsework and Formwork"
Falsework & Forms (superstructure)	8	0	Article 420-3 & "Falsework and Formwork"
Girder Erection over Railroad	5	0	Railroad Provisions
Maintenance and Protection of Traffic Beneath Proposed Structure	8	0	"Maintenance and Protection of Traffic Beneath Proposed Structure at Station ___"
Metal Bridge Railing	8	0	Plan Note
Metal Stay-in-Place Forms	8	0	Article 420-3
Metalwork for Elastomeric Bearings [4,5]	7	0	Article 1072-8
Miscellaneous Metalwork [4,5]	7	0	Article 1072-8
Optional Disc Bearings [4]	8	0	"Optional Disc Bearings"
Overhead and Digital Message Signs (DMS) (metalwork and foundations)	13	0	Applicable Provisions
Placement of Equipment on Structures (cranes, etc.)	7	0	Article 420-20
Pot Bearings [4]	8	0	"Pot Bearings"
Precast Concrete Box Culverts	2, then 1 reproducible	0	"Optional Precast Reinforced Concrete Box Culvert at Station ___"
Prestressed Concrete Cored Slab	6	0	Article 1078-11

(detensioning sequences) [3]			
Prestressed Concrete Deck Panels	6 and 1 reproducible	0	Article 420-3
Prestressed Concrete Girder (strand elongation and detensioning sequences)	6	0	Articles 1078-8 and 1078-11
Removal of Existing Structure over Railroad	5	0	Railroad Provisions
Revised Bridge Deck Plans (adaptation to prestressed deck panels)	2, then 1 reproducible	0	Article 420-3
Revised Bridge Deck Plans (adaptation to modular expansion joint seals)	2, then 1 reproducible	0	"Modular Expansion Joint Seals"
Sound Barrier Wall (precast items)	10	0	Article 1077-2 & "Sound Barrier Wall"
Sound Barrier Wall Steel Fabrication Plans [5]	7	0	Article 1072-8 & "Sound Barrier Wall"
Structural Steel [4]	2, then 7	0	Article 1072-8
Temporary Detour Structures	10	2	Article 400-3 & "Construction, Maintenance and Removal of Temporary Structure at Station ____"
TFE Expansion Bearings [4]	8	0	Article 1072-8

FOOTNOTES

1. References are provided to help locate the part of the contract where the submittals are required. References in quotes refer to the provision by that name. Articles refer to the *Standard Specifications*.
2. Submittals for these items are necessary only when required by a note on plans.
3. Submittals for these items may not be required. A list of pre-approved sequences is available from the producer or the Materials & Tests Unit.
4. The fabricator may submit these items directly to the Structure Design Unit.
5. The two sets of preliminary submittals required by Article 1072-8 of the *Standard Specifications* are not required for these items.

6. Submittals for Fabrication Drawings are not required. Submittals for Catalogue Cuts of Proposed Material are required. See Section 5.A of the referenced provision.
7. Submittals are necessary only when the top slab thickness is 18" or greater.

GEOTECHNICAL SUBMITTALS

Submittal	Copies Required by Geotechnical Engineering Unit	Copies Required by Structure Design Unit	Contract Reference Requiring Submittal [1]
Drilled Pier Construction Plans [2]	1	0	Subarticle 411-3(A)
Crosshole Sonic Logging (CSL) Reports [2]	1	0	Subarticle 411-5(A)(2)
Pile Driving Equipment Data Forms [2,3]	1	0	Subarticle 450-3(D)(2)
Pile Driving Analyzer (PDA) Reports [2]	1	0	Subarticle 450-3(F)(3)
Retaining Walls [4]	8 drawings, 2 calculations	2 drawings	Applicable Provisions
Temporary Shoring [4]	5 drawings, 2 calculations	2 drawings	"Temporary Shoring" & "Temporary Soil Nail Walls"

FOOTNOTES

1. References are provided to help locate the part of the contract where the submittals are required. References in quotes refer to the provision by that name. Subarticles refer to the *Standard Specifications*.

2. Submit one hard copy of submittal to the Resident or Bridge Maintenance Engineer. Submit a second copy of submittal electronically (PDF via email) or by facsimile, US mail or other delivery service to the appropriate Geotechnical Engineering Unit regional office. Electronic submission is preferred.

3. The Pile Driving Equipment Data Form is available from:
www.ncdot.org/doh/preconstruct/highway/geotech/formdet/
See second page of form for submittal instructions.

4. Electronic copy of submittal is required. See referenced provision.

CRANE SAFETY (8-15-05)

Comply with the manufacturer specifications and limitations applicable to the operation of any and all cranes and derricks. Prime contractors, sub-contractors, and fully operated rental companies shall comply with the current Occupational Safety and Health Administration regulations (OSHA).

Submit all items listed below to the Engineer prior to beginning crane operations involving critical lifts. A critical lift is defined as any lift that exceeds 75 percent of the manufacturer's crane chart capacity for the radius at which the load will be lifted or requires the use of more than one crane. Changes in personnel or equipment must be reported to the Engineer and all applicable items listed below must be updated and submitted prior to continuing with crane operations.

CRANE SAFETY SUBMITTAL LIST

A. **Competent Person:** Provide the name and qualifications of the "Competent Person" responsible for crane safety and lifting operations. The named competent person will have the responsibility and authority to stop any work activity due to safety concerns.

B. **Riggers:** Provide the qualifications and experience of the persons responsible for rigging operations. Qualifications and experience should include, but not be limited to, weight calculations, center of gravity determinations, selection and inspection of sling and rigging equipment, and safe rigging practices.

C. **Crane Inspections:** Inspection records for all cranes shall be current and readily accessible for review upon request.

D. **Certifications:** **By July 1, 2006**, crane operators performing critical lifts shall be certified by NC CCO (National Commission for the Certification of Crane Operators), or satisfactorily complete the Carolinas AGC's Professional Crane Operator's Proficiency Program. Other approved nationally accredited programs will be considered upon request. All crane operators shall also have a current CDL medical card. Submit a list of anticipated critical lifts and corresponding crane operator(s). Include current certification for the type of crane operated (small hydraulic, large hydraulic, small lattice, large lattice) and medical evaluations for each operator.

GROUT FOR STRUCTURES 9-30-11

1.0 DESCRIPTION

This special provision addresses grout for use in pile blockouts, grout pockets, shear keys, dowel holes and recesses for structures. This provision does not apply to grout placed in post-tensioning ducts for bridge beams, girders, or decks. Mix and place grout in accordance with the manufacturer's recommendations, the applicable sections of the Standard Specifications and this provision.

2.0 MATERIAL REQUIREMENTS

Use a Department approved pre-packaged, non-shrink, non-metallic grout. Contact the Materials and Tests Unit for a list of approved pre-packaged grouts and consult the manufacturer to determine if the pre-packaged grout selected is suitable for the required application.

When using an approved pre-packaged grout, a grout mix design submittal is not required.

The grout shall be free of soluble chlorides and contain less than one percent soluble sulfate. Supply water in compliance with Article 1024-4 of the Standard Specifications.

Aggregate may be added to the mix only where recommended or permitted by the manufacturer and Engineer. The quantity and gradation of the aggregate shall be in accordance with the manufacturer's recommendations.

Admixtures, if approved by the Department, shall be used in accordance with the manufacturer's recommendations. The manufacture date shall be clearly stamped on each container. Admixtures with an expired shelf life shall not be used.

The Engineer reserves the right to reject material based on unsatisfactory performance.

Initial setting time shall not be less than 10 minutes when tested in accordance with ASTM C266.

Test the expansion and shrinkage of the grout in accordance with ASTM C1090. The grout shall expand no more than 0.2% and shall exhibit no shrinkage. Furnish a Type 4 material certification showing results of tests conducted to determine the properties listed in the Standard Specifications and to assure the material is non-shrink.

Unless required elsewhere in the contract the compressive strength at 3 days shall be at least 5000 psi. Compressive strength in the laboratory shall be determined in accordance with ASTM C109 except the test mix shall contain only water and the dry manufactured material. Compressive strength in the field will be determined by molding and testing 4" x 8" cylinders in accordance with AASHTO T22. Construction loading and traffic loading shall not be allowed until the 3 day compressive strength is achieved.

When tested in accordance with ASTM C666, Procedure A, the durability factor of the grout shall not be less than 80.

3.0 SAMPLING AND PLACEMENT

Place and maintain components in final position until grout placement is complete and accepted. Concrete surfaces to receive grout shall be free of defective concrete, laitance, oil, grease and other foreign matter. Saturate concrete surfaces with clean water and remove excess water prior to placing grout.

Do not place grout if the grout temperature is less than 50°F or more than 90°F or if the air temperature measured at the location of the grouting operation in the shade away from artificial heat is below 45°F.

Provide grout at a rate that permits proper handling, placing and finishing in accordance with the manufacturer's recommendations unless directed otherwise by the Engineer. Use grout free of any lumps and undispersed cement. Agitate grout continuously before placement.

Control grout delivery so the interval between placing batches in the same component does not exceed 20 minutes.

The Engineer will determine the locations to sample grout and the number and type of samples collected for field and laboratory testing. The compressive strength of the grout will be considered the average compressive strength test results of 3 cube or 2 cylinder specimens at 28 days.

4.0 BASIS OF PAYMENT

No separate payment will be made for "Grout for Structures". The cost of the material, equipment, labor, placement, and any incidentals necessary to complete the work shall be considered incidental to the structure item requiring grout.

Project Special Provisions
Structure

Table of Contents

			Page #
Falsework and Formwork	(4-5-12)	.....	1
Submittal of Working Drawings	(2-10-12)	.....	8
Crane Safety	(8-15-05)	.....	14
Grout for Structures	(9-30-11)	.....	15

NORTH CAROLINA PROFESSIONAL SEAL 12274 ENGINEER OMAR R. AZIZI

6/3/13

PROJECT SPECIAL PROVISIONS
STRUCTURE

PROJECT BD-5104L **NASH COUNTY**

FALSEWORK AND FORMWORK (4-5-12)

1.0 DESCRIPTION

Use this Special Provision as a guide to develop temporary works submittals required by the Standard Specifications or other provisions; no additional submittals are required herein. Such temporary works include, but are not limited to, falsework and formwork.

Falsework is any temporary construction used to support the permanent structure until it becomes self-supporting. Formwork is the temporary structure or mold used to retain plastic or fluid concrete in its designated shape until it hardens. Access scaffolding is a temporary structure that functions as a work platform that supports construction personnel, materials, and tools, but is not intended to support the structure. Scaffolding systems that are used to temporarily support permanent structures (as opposed to functioning as work platforms) are considered to be falsework under the definitions given. Shoring is a component of falsework such as horizontal, vertical, or inclined support members. Where the term "temporary works" is used, it includes all of the temporary facilities used in bridge construction that do not become part of the permanent structure.

Design and construct safe and adequate temporary works that will support all loads imposed and provide the necessary rigidity to achieve the lines and grades shown on the plans in the final structure.

2.0 MATERIALS

Select materials suitable for temporary works; however, select materials that also ensure the safety and quality required by the design assumptions. The Engineer has authority to reject material on the basis of its condition, inappropriate use, safety, or nonconformance with the plans. Clearly identify allowable loads or stresses for all materials or manufactured devices on the plans. Revise the plan and notify the Engineer if any change to materials or material strengths is required.

3.0 DESIGN REQUIREMENTS

A. Working Drawings

Provide working drawings for items as specified in the contract, or as required by the Engineer, with design calculations and supporting data in sufficient detail to permit a structural and safety review of the proposed design of the temporary work.

On the drawings, show all information necessary to allow the design of any component to be checked independently as determined by the Engineer.

When concrete placement is involved, include data such as the drawings of proposed sequence, rate of placement, direction of placement, and location of all construction joints. Submit the number of copies as called for by the contract.

When required, have the drawings and calculations prepared under the guidance of, and sealed by, a North Carolina Registered Professional Engineer who is knowledgeable in temporary works design.

If requested by the Engineer, submit with the working drawings manufacturer's catalog data listing the weight of all construction equipment that will be supported on the temporary work. Show anticipated total settlements and/or deflections of falsework and forms on the working drawings. Include falsework footing settlements, joint take-up, and deflection of beams or girders.

As an option for the Contractor, overhang falsework hangers may be uniformly spaced, at a maximum of 36 inches, provided the following conditions are met:

Member Type (PCG)	Member Depth, (inches)	Max. Overhang Width, (inches)	Max. Slab Edge Thickness, (inches)	Max. Screed Wheel Weight, (lbs.)	Bracket Min. Vertical Leg Extension, (inches)
II	36	39	14	2000	26
III	45	42	14	2000	35
IV	54	45	14	2000	44
MBT	63	51	12	2000	50
MBT	72	55	12	1700	48

Overhang width is measured from the centerline of the girder to the edge of the deck slab.

For Type II, III & IV prestressed concrete girders (PCG), 45-degree cast-in-place half hangers and rods must have a minimum safe working load of 6,000 lbs.

For MBT prestressed concrete girders, 45-degree angle holes for falsework hanger rods shall be cast through the girder top flange and located, measuring along the top of the member, 1'-2 ½" from the edge of the top flange. Hanger hardware and rods must have a minimum safe working load of 6,000 lbs.

The overhang bracket provided for the diagonal leg shall have a minimum safe working load of 3,750 lbs. The vertical leg of the bracket shall extend to the point that the heel bears on the girder bottom flange, no closer than 4 inches from the bottom of the member. However, for 72-inch members, the heel of the bracket shall bear on the web, near the bottom flange transition.

Provide adequate overhang falsework and determine the appropriate adjustments for deck geometry, equipment, casting procedures and casting conditions.

If the optional overhang falsework spacing is used, indicate this on the falsework submittal and advise the girder producer of the proposed details. Failure to notify the Engineer of hanger type and hanger spacing on prestressed concrete girder casting drawings may delay the approval of those drawings.

Falsework hangers that support concentrated loads and are installed at the edge of thin top flange concrete girders (such as bulb tee girders) shall be spaced so as not to exceed 75% of the manufacturer's stated safe working load. Use of dual leg hangers (such as Meadow Burke HF-42 and HF-43) are not allowed on concrete girders with thin top flanges. Design the falsework and forms supporting deck slabs and overhangs on girder bridges so that there will be no differential settlement between the girders and the deck forms during placement of deck concrete.

When staged construction of the bridge deck is required, detail falsework and forms for screed and fluid concrete loads to be independent of any previous deck pour components when the mid-span girder deflection due to deck weight is greater than ¾".

Note on the working drawings any anchorages, connectors, inserts, steel sleeves or other such devices used as part of the falsework or formwork that remains in the permanent structure. If the plan notes indicate that the structure contains the necessary corrosion protection required for a Corrosive Site, epoxy coat, galvanize or metalize these devices. Electroplating will not be allowed. Any coating required by the Engineer will be considered incidental to the various pay items requiring temporary works.

Design falsework and formwork requiring submittals in accordance with the 1995 AASHTO *Guide Design Specifications for Bridge Temporary Works* except as noted herein.

1. Wind Loads

   Table 2.2 of Article 2.2.5.1 is modified to include wind velocities up to 110 mph. In addition, Table 2.2A is included to provide the maximum wind speeds by county in North Carolina.

Table 2.2 - Wind Pressure Values

Height Zone feet above ground	Pressure, lb/ft^2 for Indicated Wind Velocity, mph				
	70	80	90	100	110
0 to 30	15	20	25	30	35
30 to 50	20	25	30	35	40
50 to 100	25	30	35	40	45
over 100	30	35	40	45	50

2. Time of Removal

   The following requirements replace those of Article 3.4.8.2.

   Do not remove forms until the concrete has attained strengths required in Article 420-16 of the Standard Specifications and these Special Provisions.

   Do not remove forms until the concrete has sufficient strength to prevent damage to the surface.

Table 2.2A - Steady State Maximum Wind Speeds by Counties in North Carolina

COUNTY	25 YR (mph)	COUNTY	25 YR (mph)	COUNTY	25 YR (mph)
Alamance	70	Franklin	70	Pamlico	100
Alexander	70	Gaston	70	Pasquotank	100
Alleghany	70	Gates	90	Pender	100
Anson	70	Graham	80	Perquimans	100
Ashe	70	Granville	70	Person	70
Avery	70	Greene	80	Pitt	90
Beaufort	100	Guilford	70	Polk	80
Bertie	90	Halifax	80	Randolph	70
Bladen	90	Harnett	70	Richmond	70
Brunswick	100	Haywood	80	Robeson	80
Buncombe	80	Henderson	80	Rockingham	70
Burke	70	Hertford	90	Rowan	70
Cabarrus	70	Hoke	70	Rutherford	70
Caldwell	70	Hyde	110	Sampson	90
Camden	100	Iredell	70	Scotland	70
Carteret	110	Jackson	80	Stanley	70
Caswell	70	Johnston	80	Stokes	70
Catawba	70	Jones	100	Surry	70
Cherokee	80	Lee	70	Swain	80
Chatham	70	Lenoir	90	Transylvania	80
Chowan	90	Lincoln	70	Tyrell	100
Clay	80	Macon	80	Union	70
Cleveland	70	Madison	80	Vance	70
Columbus	90	Martin	90	Wake	70
Craven	100	McDowell	70	Warren	70
Cumberland	80	Mecklenburg	70	Washington	100
Currituck	100	Mitchell	70	Watauga	70
Dare	110	Montgomery	70	Wayne	80
Davidson	70	Moore	70	Wilkes	70
Davie	70	Nash	80	Wilson	80
Duplin	90	New Hanover	100	Yadkin	70
Durham	70	Northampton	80	Yancey	70
Edgecombe	80	Onslow	100		
Forsyth	70	Orange	70		

B. Review and Approval

The Engineer is responsible for the review and approval of temporary works' drawings.

Submit the working drawings sufficiently in advance of proposed use to allow for their review, revision (if needed), and approval without delay to the work.

The time period for review of the working drawings does not begin until complete drawings and design calculations, when required, are received by the Engineer.

Do not start construction of any temporary work for which working drawings are required until the drawings have been approved. Such approval does not relieve the Contractor of the responsibility for the accuracy and adequacy of the working drawings.

4.0 CONSTRUCTION REQUIREMENTS

All requirements of Section 420 of the Standard Specifications apply.

Construct temporary works in conformance with the approved working drawings. Ensure that the quality of materials and workmanship employed is consistent with that assumed in the design of the temporary works. Do not weld falsework members to any portion of the permanent structure unless approved. Show any welding to the permanent structure on the approved construction drawings.

Provide tell-tales attached to the forms and extending to the ground, or other means, for accurate measurement of falsework settlement. Make sure that the anticipated compressive settlement and/or deflection of falsework does not exceed 1 inch. For cast-in-place concrete structures, make sure that the calculated deflection of falsework flexural members does not exceed 1/240 of their span regardless of whether or not the deflection is compensated by camber strips.

A. Maintenance and Inspection

Inspect and maintain the temporary work in an acceptable condition throughout the period of its use. Certify that the manufactured devices have been maintained in a condition to allow them to safely carry their rated loads. Clearly mark each piece so that its capacity can be readily determined at the job site.

Perform an in-depth inspection of an applicable portion(s) of the temporary works, in the presence of the Engineer, not more than 24 hours prior to the beginning of each concrete placement. Inspect other temporary works at least once a month to ensure that they are functioning properly. Have a North Carolina Registered Professional Engineer inspect the cofferdams, shoring, sheathing, support of excavation structures, and support systems for load tests prior to loading.

B. Foundations

Determine the safe bearing capacity of the foundation material on which the supports for temporary works rest. If required by the Engineer, conduct load tests to verify proposed bearing capacity values that are marginal or in other high-risk situations.

The use of the foundation support values shown on the contract plans of the permanent structure is permitted if the foundations are on the same level and on the same soil as those of the permanent structure.

Allow for adequate site drainage or soil protection to prevent soil saturation and washout of the soil supporting the temporary works supports.

If piles are used, the estimation of capacities and later confirmation during construction using standard procedures based on the driving characteristics of the pile is permitted. If preferred, use load tests to confirm the estimated capacities; or, if required by the Engineer conduct load tests to verify bearing capacity values that are marginal or in other high risk situations.

The Engineer reviews and approves the proposed pile and soil bearing capacities.

5.0 REMOVAL

Unless otherwise permitted, remove and keep all temporary works upon completion of the work. Do not disturb or otherwise damage the finished work.

Remove temporary works in conformance with the contract documents. Remove them in such a manner as to permit the structure to uniformly and gradually take the stresses due to its own weight.

6.0 METHOD OF MEASUREMENT

Unless otherwise specified, temporary works will not be directly measured.

7.0 BASIS OF PAYMENT

Payment at the contract unit prices for the various pay items requiring temporary works will be full compensation for the above falsework and formwork.

SUBMITTAL OF WORKING DRAWINGS (2-10-12)

1.0 GENERAL

Submit working drawings in accordance with Article 105-2 of the *Standard Specifications* and this provision. For this provision, "submittals" refers to only those listed in this provision. The list of submittals contained herein does not represent a list of required submittals for the project. Submittals are only necessary for those items as required by the contract. Make submittals that are not specifically noted in this provision directly to the Resident Engineer. Either the Structure Design Unit or the Geotechnical Engineering Unit or both units will jointly review submittals.

If a submittal contains variations from plan details or specifications or significantly affects project cost, field construction or operations, discuss the submittal with and submit all copies to the Resident Engineer. State the reason for the proposed variation in the submittal. To minimize review time, make sure all submittals are complete when initially submitted. Provide a contact name and information with each submittal. Direct any questions regarding submittal requirements to the Resident Engineer, Structure Design Unit contacts or the Geotechnical Engineering Unit contacts noted below.

In order to facilitate in-plant inspection by NCDOT and approval of working drawings, provide the name, address and telephone number of the facility where fabrication will actually be done if different than shown on the title block of the submitted working drawings. This includes, but is not limited to, precast concrete items, prestressed concrete items and fabricated steel or aluminum items.

2.0 ADDRESSES AND CONTACTS

For submittals to the Structure Design Unit, use the following addresses:

Via US mail:

Mr. G. R. Perfetti, P. E.
State Structures Engineer
North Carolina Department
of Transportation
Structures Management Unit
1581 Mail Service Center
Raleigh, NC 27699-1581

Attention: Mr. P. D. Lambert, P. E.

Via other delivery service:

Mr. G. R. Perfetti, P. E.
State Structures Engineer
North Carolina Department
of Transportation
Structures Management Unit
1000 Birch Ridge Drive
Raleigh, NC 27610

Attention: Mr. P. D. Lambert, P. E.

Submittals may also be made via email.

Send submittals to:

plambert@ncdot.gov (Paul Lambert)

Send an additional e-copy of the submittal to the following address:

jgaither@ncdot.gov (James Gaither)

jlbolden@ncdot.gov (James Bolden)

For submittals to the Geotechnical Engineering Unit, use the following addresses:

For projects in Divisions 1-7, use the following Eastern Regional Office address:

Via US mail:

Mr. K. J. Kim, Ph. D., P. E.
Eastern Regional Geotechnical Manager
North Carolina Department of Transportation
Geotechnical Engineering Unit
Eastern Regional Office
1570 Mail Service Center
Raleigh, NC 27699-1570

Via other delivery service:

Mr. K. J. Kim, Ph. D., P. E.
Eastern Regional Geotechnical Manager
North Carolina Department of Transportation
Geotechnical Engineering Unit
Eastern Regional Office
3301 Jones Sausage Road, Suite 100
Garner, NC 27529

For projects in Divisions 8-14, use the following Western Regional Office address:

Via US mail:

Mr. John Pilipchuk, L. G., P. E.
Western Regional Geotechnical Manager
North Carolina Department of Transportation
Geotechnical Engineering Unit
Western Regional Office
5253 Z Max Boulevard
Harrisburg, NC 28075

Via other delivery service:

Mr. John Pilipchuk, L. G., P. E.
Western Region Geotechnical Manager
North Carolina Department of Transportation
Geotechnical Engineering Unit
Western Regional Office
5253 Z Max Boulevard
Harrisburg, NC 28075

The status of the review of structure-related submittals sent to the Structure Design Unit can be viewed from the Unit's web site, via the "Contractor Submittal" link.

Direct any questions concerning submittal review status, review comments or drawing markups to the following contacts:

Primary Structures Contact: Paul Lambert (919) 707 – 6407
(919) 250 – 4082 facsimile
plambert@ncdot.gov

Secondary Structures Contacts: James Gaither (919) 707 – 6409
James Bolden (919) 707 – 6408

Eastern Regional Geotechnical Contact (Divisions 1-7):
K. J. Kim (919) 662 – 4710
(919) 662 – 3095 facsimile
kkim@ncdot.gov

Western Regional Geotechnical Contact (Divisions 8-14):
John Pilipchuk (704) 455 – 8902
(704) 455 – 8912 facsimile
jpilipchuk@ncdot.gov

3.0 SUBMITTAL COPIES

Furnish one complete copy of each submittal, including all attachments, to the Resident Engineer. At the same time, submit the number of hard copies shown below of the same complete submittal directly to the Structure Design Unit and/or the Geotechnical Engineering Unit.

The first table below covers "Structure Submittals". The Resident Engineer will receive review comments and drawing markups for these submittals from the Structure Design Unit. The second table in this section covers "Geotechnical Submittals". The Resident Engineer will receive review comments and drawing markups for these submittals from the Geotechnical Engineering Unit.

Unless otherwise required, submit one set of supporting calculations to either the Structure Design Unit or the Geotechnical Engineering Unit unless both units require submittal copies in which case submit a set of supporting calculations to each unit. Provide additional copies of any submittal as directed.

STRUCTURE SUBMITTALS

Submittal	Copies Required by Structure Design Unit	Copies Required by Geotechnical Engineering Unit	Contract Reference Requiring Submittal [1]
Arch Culvert Falsework	5	0	Plan Note, SN Sheet & "Falsework and Formwork"
Box Culvert Falsework [7]	5	0	Plan Note, SN Sheet & "Falsework and Formwork"
Cofferdams	6	2	Article 410-4

Foam Joint Seals [6]	9	0	"Foam Joint Seals"
Expansion Joint Seals (hold down plate type with base angle)	9	0	"Expansion Joint Seals"
Expansion Joint Seals (modular)	2, then 9	0	"Modular Expansion Joint Seals"
Expansion Joint Seals (strip seals)	9	0	"Strip Seals"
Falsework & Forms [2] (substructure)	8	0	Article 420-3 & "Falsework and Formwork"
Falsework & Forms (superstructure)	8	0	Article 420-3 & "Falsework and Formwork"
Girder Erection over Railroad	5	0	Railroad Provisions
Maintenance and Protection of Traffic Beneath Proposed Structure	8	0	"Maintenance and Protection of Traffic Beneath Proposed Structure at Station ___"
Metal Bridge Railing	8	0	Plan Note
Metal Stay-in-Place Forms	8	0	Article 420-3
Metalwork for Elastomeric Bearings [4,5]	7	0	Article 1072-8
Miscellaneous Metalwork [4,5]	7	0	Article 1072-8
Optional Disc Bearings [4]	8	0	"Optional Disc Bearings"
Overhead and Digital Message Signs (DMS) (metalwork and foundations)	13	0	Applicable Provisions
Placement of Equipment on Structures (cranes, etc.)	7	0	Article 420-20
Pot Bearings [4]	8	0	"Pot Bearings"
Precast Concrete Box Culverts	2, then 1 reproducible	0	"Optional Precast Reinforced Concrete Box Culvert at Station ___"
Prestressed Concrete Cored Slab	6	0	Article 1078-11

(detensioning sequences) [3]			
Prestressed Concrete Deck Panels	6 and 1 reproducible	0	Article 420-3
Prestressed Concrete Girder (strand elongation and detensioning sequences)	6	0	Articles 1078-8 and 1078-11
Removal of Existing Structure over Railroad	5	0	Railroad Provisions
Revised Bridge Deck Plans (adaptation to prestressed deck panels)	2, then 1 reproducible	0	Article 420-3
Revised Bridge Deck Plans (adaptation to modular expansion joint seals)	2, then 1 reproducible	0	"Modular Expansion Joint Seals"
Sound Barrier Wall (precast items)	10	0	Article 1077-2 & "Sound Barrier Wall"
Sound Barrier Wall Steel Fabrication Plans [5]	7	0	Article 1072-8 & "Sound Barrier Wall"
Structural Steel [4]	2, then 7	0	Article 1072-8
Temporary Detour Structures	10	2	Article 400-3 & "Construction, Maintenance and Removal of Temporary Structure at Station ____"
TFE Expansion Bearings [4]	8	0	Article 1072-8

FOOTNOTES

1. References are provided to help locate the part of the contract where the submittals are required. References in quotes refer to the provision by that name. Articles refer to the *Standard Specifications*.
2. Submittals for these items are necessary only when required by a note on plans.
3. Submittals for these items may not be required. A list of pre-approved sequences is available from the producer or the Materials & Tests Unit.
4. The fabricator may submit these items directly to the Structure Design Unit.
5. The two sets of preliminary submittals required by Article 1072-8 of the *Standard Specifications* are not required for these items.

6. Submittals for Fabrication Drawings are not required. Submittals for Catalogue Cuts of Proposed Material are required. See Section 5.A of the referenced provision.
7. Submittals are necessary only when the top slab thickness is 18" or greater.

GEOTECHNICAL SUBMITTALS

Submittal	Copies Required by Geotechnical Engineering Unit	Copies Required by Structure Design Unit	Contract Reference Requiring Submittal [1]
Drilled Pier Construction Plans [2]	1	0	Subarticle 411-3(A)
Crosshole Sonic Logging (CSL) Reports [2]	1	0	Subarticle 411-5(A)(2)
Pile Driving Equipment Data Forms [2,3]	1	0	Subarticle 450-3(D)(2)
Pile Driving Analyzer (PDA) Reports [2]	1	0	Subarticle 450-3(F)(3)
Retaining Walls [4]	8 drawings, 2 calculations	2 drawings	Applicable Provisions
Temporary Shoring [4]	5 drawings, 2 calculations	2 drawings	"Temporary Shoring" & "Temporary Soil Nail Walls"

FOOTNOTES

1. References are provided to help locate the part of the contract where the submittals are required. References in quotes refer to the provision by that name. Subarticles refer to the *Standard Specifications*.

2. Submit one hard copy of submittal to the Resident or Bridge Maintenance Engineer. Submit a second copy of submittal electronically (PDF via email) or by facsimile, US mail or other delivery service to the appropriate Geotechnical Engineering Unit regional office. Electronic submission is preferred.

3. The Pile Driving Equipment Data Form is available from:
www.ncdot.org/doh/preconstruct/highway/geotech/formdet/
See second page of form for submittal instructions.

4. Electronic copy of submittal is required. See referenced provision.

CRANE SAFETY (8-15-05)

Comply with the manufacturer specifications and limitations applicable to the operation of any and all cranes and derricks. Prime contractors, sub-contractors, and fully operated rental companies shall comply with the current Occupational Safety and Health Administration regulations (OSHA).

Submit all items listed below to the Engineer prior to beginning crane operations involving critical lifts. A critical lift is defined as any lift that exceeds 75 percent of the manufacturer's crane chart capacity for the radius at which the load will be lifted or requires the use of more than one crane. Changes in personnel or equipment must be reported to the Engineer and all applicable items listed below must be updated and submitted prior to continuing with crane operations.

CRANE SAFETY SUBMITTAL LIST

A. **Competent Person:** Provide the name and qualifications of the "Competent Person" responsible for crane safety and lifting operations. The named competent person will have the responsibility and authority to stop any work activity due to safety concerns.

B. **Riggers:** Provide the qualifications and experience of the persons responsible for rigging operations. Qualifications and experience should include, but not be limited to, weight calculations, center of gravity determinations, selection and inspection of sling and rigging equipment, and safe rigging practices.

C. **Crane Inspections:** Inspection records for all cranes shall be current and readily accessible for review upon request.

D. **Certifications:** **By July 1, 2006**, crane operators performing critical lifts shall be certified by NC CCO (National Commission for the Certification of Crane Operators), or satisfactorily complete the Carolinas AGC's Professional Crane Operator's Proficiency Program. Other approved nationally accredited programs will be considered upon request. All crane operators shall also have a current CDL medical card. Submit a list of anticipated critical lifts and corresponding crane operator(s). Include current certification for the type of crane operated (small hydraulic, large hydraulic, small lattice, large lattice) and medical evaluations for each operator.

GROUT FOR STRUCTURES 9-30-11

1.0 DESCRIPTION

This special provision addresses grout for use in pile blockouts, grout pockets, shear keys, dowel holes and recesses for structures. This provision does not apply to grout placed in post-tensioning ducts for bridge beams, girders, or decks. Mix and place grout in accordance with the manufacturer's recommendations, the applicable sections of the Standard Specifications and this provision.

2.0 MATERIAL REQUIREMENTS

Use a Department approved pre-packaged, non-shrink, non-metallic grout. Contact the Materials and Tests Unit for a list of approved pre-packaged grouts and consult the manufacturer to determine if the pre-packaged grout selected is suitable for the required application.

When using an approved pre-packaged grout, a grout mix design submittal is not required.

The grout shall be free of soluble chlorides and contain less than one percent soluble sulfate. Supply water in compliance with Article 1024-4 of the Standard Specifications.

Aggregate may be added to the mix only where recommended or permitted by the manufacturer and Engineer. The quantity and gradation of the aggregate shall be in accordance with the manufacturer's recommendations.

Admixtures, if approved by the Department, shall be used in accordance with the manufacturer's recommendations. The manufacture date shall be clearly stamped on each container. Admixtures with an expired shelf life shall not be used.

The Engineer reserves the right to reject material based on unsatisfactory performance.

Initial setting time shall not be less than 10 minutes when tested in accordance with ASTM C266.

Test the expansion and shrinkage of the grout in accordance with ASTM C1090. The grout shall expand no more than 0.2% and shall exhibit no shrinkage. Furnish a Type 4 material certification showing results of tests conducted to determine the properties listed in the Standard Specifications and to assure the material is non-shrink.

Unless required elsewhere in the contract the compressive strength at 3 days shall be at least 5000 psi. Compressive strength in the laboratory shall be determined in accordance with ASTM C109 except the test mix shall contain only water and the dry manufactured material. Compressive strength in the field will be determined by molding and testing 4" x 8" cylinders in accordance with AASHTO T22. Construction loading and traffic loading shall not be allowed until the 3 day compressive strength is achieved.

When tested in accordance with ASTM C666, Procedure A, the durability factor of the grout shall not be less than 80.

3.0 SAMPLING AND PLACEMENT

Place and maintain components in final position until grout placement is complete and accepted. Concrete surfaces to receive grout shall be free of defective concrete, laitance, oil, grease and other foreign matter. Saturate concrete surfaces with clean water and remove excess water prior to placing grout.

Do not place grout if the grout temperature is less than 50°F or more than 90°F or if the air temperature measured at the location of the grouting operation in the shade away from artificial heat is below 45°F.

Provide grout at a rate that permits proper handling, placing and finishing in accordance with the manufacturer's recommendations unless directed otherwise by the Engineer. Use grout free of any lumps and undispersed cement. Agitate grout continuously before placement.

Control grout delivery so the interval between placing batches in the same component does not exceed 20 minutes.

The Engineer will determine the locations to sample grout and the number and type of samples collected for field and laboratory testing. The compressive strength of the grout will be considered the average compressive strength test results of 3 cube or 2 cylinder specimens at 28 days.

4.0 BASIS OF PAYMENT

No separate payment will be made for "Grout for Structures". The cost of the material, equipment, labor, placement, and any incidentals necessary to complete the work shall be considered incidental to the structure item requiring grout.

PROJECT SPECIAL PROVISION

(10-18-95) (Rev. 10-15-13) Z-1

PERMITS

The Contractor's attention is directed to the following permits, which have been issued to the Department of Transportation by the authority granting the permit.

PERMIT	AUTHORITY GRANTING THE PERMIT
Dredge and Fill and/or Work in Navigable Waters (404)	U. S. Army Corps of Engineers
Water Quality (401)	Division of Environmental Management, DENR State of North Carolina
Buffer Certification	Division of Environmental Management, DENR State of North Carolina

The Contractor shall comply with all applicable permit conditions during construction of this project. Those conditions marked by ***** are the responsibility of the Department and the Contractor has no responsibility in accomplishing those conditions.

Agents of the permitting authority will periodically inspect the project for adherence to the permits.

The Contractor's attention is also directed to Articles 107-10 and 107-13 of the *2012 Standard Specifications* and the following:

Should the Contractor propose to utilize construction methods (such as temporary structures or fill in waters and/or wetlands for haul roads, work platforms, cofferdams, etc.) not specifically identified in the permit (individual, general, or nationwide) authorizing the project it shall be the Contractor's responsibility to coordinate with the Engineer to determine what, if any, additional permit action is required. The Contractor shall also be responsible for initiating the request for the authorization of such construction method by the permitting agency. The request shall be submitted through the Engineer. The Contractor shall not utilize the construction method until it is approved by the permitting agency. The request normally takes approximately 60 days to process; however, no extensions of time or additional compensation will be granted for delays resulting from the Contractor's request for approval of construction methods not specifically identified in the permit.

Where construction moratoriums are contained in a permit condition which restricts the Contractor's activities to certain times of the year, those moratoriums will apply only to the portions of the work taking place in the waters or wetlands provided that activities outside those areas is done in such a manner as to not affect the waters or wetlands.

NATIONWIDE PERMIT 3
DEPARTMENT OF THE ARMY
CORPS OF ENGINEERS
FINAL NOTICE OF ISSUANCE AND MODIFICATION OF NATIONWIDE PERMITS
FEDERAL REGISTER
AUTHORIZED MARCH 19, 2012

Maintenance. (a) The repair, rehabilitation, or replacement of any previously authorized, currently serviceable structure, or fill, or of any currently serviceable structure or fill authorized by 33 CFR 330.3, provided that the structure or fill is not to be put to uses differing from those uses specified or contemplated for it in the original permit or the most recently authorized modification. Minor deviations in the structure's configuration or filled area, including those due to changes in materials, construction techniques, requirements of other regulatory agencies, or current construction codes or safety standards that are necessary to make the repair, rehabilitation, or replacement are authorized. Any stream channel modification is limited to the minimum necessary for the repair, rehabilitation, or replacement of the structure or fill; such modifications, including the removal of material from the stream channel, must be immediately adjacent to the project or within the boundaries of the structure or fill. This NWP also authorizes the repair, rehabilitation, or replacement of those structures or fills destroyed or damaged by storms, floods, fire or other discrete events, provided the repair, rehabilitation, or replacement is commenced, or is under contract to commence, within two years of the date of their destruction or damage. In cases of catastrophic events, such as hurricanes or tornadoes, this two-year limit may be waived by the district engineer, provided the permittee can demonstrate funding, contract, or other similar delays.

(b) This NWP also authorizes the removal of accumulated sediments and debris in the vicinity of existing structures (e.g., bridges, culverted road crossings, water intake structures, etc.) and/or the placement of new or additional riprap to protect the structure. The removal of sediment is limited to the minimum necessary to restore the waterway in the vicinity of the structure to the approximate dimensions that existed when the structure was built, but cannot extend farther than 200 feet in any direction from the structure. This 200 foot limit does not apply to maintenance dredging to remove accumulated sediments blocking or restricting outfall and intake structures or to maintenance dredging to remove accumulated sediments from canals associated with outfall and intake structures. All dredged or excavated materials must be deposited and retained in an area that has no waters of the United States unless otherwise specifically approved by the district engineer under separate authorization. The placement of new or additional riprap must be the minimum necessary to protect the structure or to ensure the safety of the structure. Any bank stabilization measures not directly associated with the structure will require a separate authorization from the district engineer.

(c) This NWP also authorizes temporary structures, fills, and work necessary to conduct the maintenance activity. Appropriate measures must be taken to maintain normal downstream flows and minimize flooding to the maximum extent practicable, when temporary structures, work, and discharges, including cofferdams, are necessary for construction activities, access fills, or dewatering of construction sites. Temporary fills must consist of materials, and be placed in a manner, that will not be eroded by expected high flows. Temporary fills must be removed in

their entirety and the affected areas returned to pre-construction elevations. The areas affected by temporary fills must be revegetated, as appropriate.

(d) This NWP does not authorize maintenance dredging for the primary purpose of navigation. This NWP does not authorize beach restoration. This NWP does not authorize new stream channelization or stream relocation projects.

Notification: For activities authorized by paragraph (b) of this NWP, the permittee must submit a pre-construction notification to the district engineer prior to commencing the activity (see general condition 31). The pre-construction notification must include information regarding the original design capacities and configurations of the outfalls, intakes, small impoundments, and canals. (Sections 10 and 404)

Note: This NWP authorizes the repair, rehabilitation, or replacement of any previously authorized structure or fill that does not qualify for the Clean Water Act Section 404(f) exemption for maintenance.

NATIONWIDE PERMIT CONDITIONS

The following General Conditions must be followed in order for any authorization by a NWP to be valid:

1. Navigation. (a) No activity may cause more than a minimal adverse effect on navigation.

(b) Any safety lights and signals prescribed by the U.S. Coast Guard, through regulations or otherwise, must be installed and maintained at the permittee's expense on authorized facilities in navigable waters of the United States.

(c) The permittee understands and agrees that, if future operations by the United States require the removal, relocation, or other alteration, of the structure or work herein authorized, or if, in the opinion of the Secretary of the Army or his authorized representative, said structure or work shall cause unreasonable obstruction to the free navigation of the navigable waters, the permittee will be required, upon due notice from the Corps of Engineers, to remove, relocate, or alter the structural work or obstructions caused thereby, without expense to the United States. No claim shall be made against the United States on account of any such removal or alteration.

2. Aquatic Life Movements. No activity may substantially disrupt the necessary life cycle movements of those species of aquatic life indigenous to the waterbody, including those species that normally migrate through the area, unless the activity's primary purpose is to impound water. All permanent and temporary crossings of waterbodies shall be suitably culverted, bridged, or otherwise designed and constructed to maintain low flows to sustain the movement of those aquatic species.

3. Spawning Areas. Activities in spawning areas during spawning seasons must be avoided to the maximum extent practicable. Activities that result in the physical destruction (e.g., through excavation, fill, or downstream smothering by substantial turbidity) of an important spawning area are not authorized.

4. Migratory Bird Breeding Areas. Activities in waters of the United States that serve as breeding areas for migratory birds must be avoided to the maximum extent practicable.

5. Shellfish Beds. No activity may occur in areas of concentrated shellfish populations, unless the activity is directly related to a shellfish harvesting activity authorized by NWPs 4 and 48, or is a shellfish seeding or habitat restoration activity authorized by NWP 27.

6. Suitable Material. No activity may use unsuitable material (e.g., trash, debris, car bodies, asphalt, etc.). Material used for construction or discharged must be free from toxic pollutants in toxic amounts (see Section 307 of the Clean Water Act).

7. Water Supply Intakes. No activity may occur in the proximity of a public water supply intake, except where the activity is for the repair or improvement of public water supply intake structures or adjacent bank stabilization.

8. Adverse Effects From Impoundments. If the activity creates an impoundment of water, adverse effects to the aquatic system due to accelerating the passage of water, and/or restricting its flow must be minimized to the maximum extent practicable.

9. Management of Water Flows. To the maximum extent practicable, the pre-construction course, condition, capacity, and location of open waters must be maintained for each activity, including stream channelization and storm water management activities, except as provided below. The activity must be constructed to withstand expected high flows. The activity must not restrict or impede the passage of normal or high flows, unless the primary purpose of the activity is to impound water or manage high flows. The activity may alter the pre-construction course, condition, capacity, and location of open waters if it benefits the aquatic environment (e.g., stream restoration or relocation activities).

10. Fills Within 100-Year Floodplains. The activity must comply with applicable FEMA-approved state or local floodplain management requirements.

11. Equipment. Heavy equipment working in wetlands or mudflats must be placed on mats, or other measures must be taken to minimize soil disturbance.

12. Soil Erosion and Sediment Controls. Appropriate soil erosion and sediment controls must be used and maintained in effective operating condition during construction, and all exposed soil and other fills, as well as any work below the ordinary high water mark or high tide line, must be permanently stabilized at the earliest practicable date. Permittees are encouraged to perform work within waters of the United States during periods of low-flow or no-flow.

13. Removal of Temporary Fills. Temporary fills must be removed in their entirety and the affected areas returned to pre-construction elevations. The affected areas must be revegetated, as appropriate.

14. Proper Maintenance. Any authorized structure or fill shall be properly maintained, including maintenance to ensure public safety and compliance with applicable NWP general conditions, as well as any activity-specific conditions added by the district engineer to an NWP authorization.

15. Single and Complete Project. The activity must be a single and complete project. The same NWP cannot be used more than once for the same single and complete project.

16. Wild and Scenic Rivers. No activity may occur in a component of the National Wild and Scenic River System, or in a river officially designated by Congress as a “study river” for possible inclusion in the system while the river is in an official study status, unless the appropriate Federal agency with direct management responsibility for such river, has determined in writing that the proposed activity will not adversely affect the Wild and Scenic River designation or study status. Information on Wild and Scenic Rivers may be obtained from the appropriate Federal land management agency responsible for the designated Wild and Scenic River or study river (e.g., National Park Service, U.S. Forest Service, Bureau of Land Management, U.S. Fish and Wildlife Service).

17. Tribal Rights. No activity or its operation may impair reserved tribal rights, including, but not limited to, reserved water rights and treaty fishing and hunting rights.

18. Endangered Species. (a) No activity is authorized under any NWP which is likely to directly or indirectly jeopardize the continued existence of a threatened or endangered species or a species proposed for such designation, as identified under the Federal Endangered Species Act (ESA), or which will directly or indirectly destroy or adversely modify the critical habitat of such species. No activity is authorized under any NWP which "may affect" a listed species or critical habitat, unless Section 7 consultation addressing the effects of the proposed activity has been completed.

(b) Federal agencies should follow their own procedures for complying with the requirements of the ESA. Federal permittees must provide the district engineer with the appropriate documentation to demonstrate compliance with those requirements. The district engineer will review the documentation and determine whether it is sufficient to address ESA compliance for the NWP activity, or whether additional ESA consultation is necessary.

(c) Non-federal permittees must submit a pre-construction notification to the district engineer if any listed species or designated critical habitat might be affected or is in the vicinity of the project, or if the project is located in designated critical habitat, and shall not begin work on the activity until notified by the district engineer that the requirements of the ESA have been satisfied and that the activity is authorized. For activities that might affect Federally-listed endangered or threatened species or designated critical habitat, the pre-construction notification must include the name(s) of the endangered or threatened species that might be affected by the proposed work or that utilize the designated critical habitat that might be affected by the proposed work. The district engineer will determine whether the proposed activity "may affect" or will have "no effect" to listed species and designated critical habitat and will notify the non-Federal applicant of the Corps' determination within 45 days of receipt of a complete pre-construction notification. In cases where the non-Federal applicant has identified listed species or critical habitat that might be affected or is in the vicinity of the project, and has so notified the Corps, the applicant shall not begin work until the Corps has provided notification the proposed activities will have "no effect" on listed species or critical habitat, or until Section 7 consultation has been completed. If the non-Federal applicant has not heard back from the Corps within 45 days, the applicant must still wait for notification from the Corps.

(d) As a result of formal or informal consultation with the FWS or NMFS the district engineer may add species-specific regional endangered species conditions to the NWPs.

(e) Authorization of an activity by a NWP does not authorize the "take" of a threatened or endangered species as defined under the ESA. In the absence of separate authorization (e.g., an ESA Section 10 Permit, a Biological Opinion with "incidental take" provisions, etc.) from the U.S. FWS or the NMFS, The Endangered Species Act prohibits any person subject to the jurisdiction of the United States to take a listed species, where "take" means to harass, harm, pursue, hunt, shoot, wound, kill, trap, capture, or collect, or to attempt to engage in any such conduct. The word "harm" in the definition of "take" means an act which actually kills or injures wildlife. Such an act may include significant habitat modification or degradation where it actually kills or injures wildlife by significantly impairing essential behavioral patterns, including breeding, feeding or sheltering.

(f) Information on the location of threatened and endangered species and their critical habitat can be obtained directly from the offices of the U.S. FWS and NMFS or their world wide web pages at http://www.fws.gov/ or http://www.fws.gov/ipac and http://www.noaa.gov/fisheries.html respectively.

19. Migratory Birds and Bald and Golden Eagles. The permittee is responsible for obtaining any "take" permits required under the U.S. Fish and Wildlife Service's regulations governing compliance with the Migratory Bird Treaty Act or the Bald and Golden Eagle Protection Act. The permittee should contact the appropriate local office of the U.S. Fish and Wildlife Service to determine if such "take" permits are required for a particular activity.

20. Historic Properties. (a) In cases where the district engineer determines that the activity may affect properties listed, or eligible for listing, in the National Register of Historic Places, the activity is not authorized, until the requirements of Section 106 of the National Historic Preservation Act (NHPA) have been satisfied.

(b) Federal permittees should follow their own procedures for complying with the requirements of Section 106 of the National Historic Preservation Act. Federal permittees must provide the district engineer with the appropriate documentation to demonstrate compliance with those requirements. The district engineer will review the documentation and determine whether it is sufficient to address section 106 compliance for the NWP activity, or whether additional section 106 consultation is necessary.

(c) Non-federal permittees must submit a pre-construction notification to the district engineer if the authorized activity may have the potential to cause effects to any historic properties listed on, determined to be eligible for listing on, or potentially eligible for listing on the National Register of Historic Places, including previously unidentified properties. For such activities, the pre-construction notification must state which historic properties may be affected by the proposed work or include a vicinity map indicating the location of the historic properties or the potential for the presence of historic properties. Assistance regarding information on the location of or potential for the presence of historic resources can be sought from the State Historic Preservation Officer or Tribal Historic Preservation Officer, as appropriate, and the National Register of Historic Places (see 33 CFR 330.4(g)). When reviewing pre-construction notifications, district engineers will comply with the current procedures for addressing the requirements of Section 106 of the National Historic Preservation Act. The district engineer shall make a reasonable and good faith effort to carry out appropriate identification efforts, which may include background research, consultation, oral history interviews, sample field investigation, and field survey. Based on the information submitted and these efforts, the district engineer shall determine whether the proposed activity has the potential to cause an effect on the historic properties. Where the non-Federal applicant has identified historic properties on which the activity may have the potential to cause effects and so notified the Corps, the non-Federal applicant shall not begin the activity until notified by the district engineer either that the activity has no potential to cause effects or that consultation under Section 106 of the NHPA has been completed.

(d) The district engineer will notify the prospective permittee within 45 days of receipt of a complete pre-construction notification whether NHPA Section 106 consultation is required. Section 106 consultation is not required when the Corps determines that the activity does not have the potential to cause effects on historic properties (see 36 CFR §800.3(a)). If NHPA

section 106 consultation is required and will occur, the district engineer will notify the non-Federal applicant that he or she cannot begin work until Section 106 consultation is completed. If the non-Federal applicant has not heard back from the Corps within 45 days, the applicant must still wait for notification from the Corps.

(e) Prospective permittees should be aware that section 110k of the NHPA (16 U.S.C. 470h-2(k)) prevents the Corps from granting a permit or other assistance to an applicant who, with intent to avoid the requirements of Section 106 of the NHPA, has intentionally significantly adversely affected a historic property to which the permit would relate, or having legal power to prevent it, allowed such significant adverse effect to occur, unless the Corps, after consultation with the Advisory Council on Historic Preservation (ACHP), determines that circumstances justify granting such assistance despite the adverse effect created or permitted by the applicant. If circumstances justify granting the assistance, the Corps is required to notify the ACHP and provide documentation specifying the circumstances, the degree of damage to the integrity of any historic properties affected, and proposed mitigation. This documentation must include any views obtained from the applicant, SHPO/THPO, appropriate Indian tribes if the undertaking occurs on or affects historic properties on tribal lands or affects properties of interest to those tribes, and other parties known to have a legitimate interest in the impacts to the permitted activity on historic properties.

21. Discovery of Previously Unknown Remains and Artifacts. If you discover any previously unknown historic, cultural or archeological remains and artifacts while accomplishing the activity authorized by this permit, you must immediately notify the district engineer of what you have found, and to the maximum extent practicable, avoid construction activities that may affect the remains and artifacts until the required coordination has been completed. The district engineer will initiate the Federal, Tribal and state coordination required to determine if the items or remains warrant a recovery effort or if the site is eligible for listing in the National Register of Historic Places.

22. Designated Critical Resource Waters. Critical resource waters include, NOAA-managed marine sanctuaries and marine monuments, and National Estuarine Research Reserves. The district engineer may designate, after notice and opportunity for public comment, additional waters officially designated by a state as having particular environmental or ecological significance, such as outstanding national resource waters or state natural heritage sites. The district engineer may also designate additional critical resource waters after notice and opportunity for public comment.

(a) Discharges of dredged or fill material into waters of the United States are not authorized by NWPs 7, 12, 14, 16, 17, 21, 29, 31, 35, 39, 40, 42, 43, 44, 49, 50, 51, and 52 for any activity within, or directly affecting, critical resource waters, including wetlands adjacent to such waters.

(b) For NWPs 3, 8, 10, 13, 15, 18, 19, 22, 23, 25, 27, 28, 30, 33, 34, 36, 37, and 38, notification is required in accordance with general condition 31, for any activity proposed in the designated critical resource waters including wetlands adjacent to those waters. The district engineer may authorize activities under these NWPs only after it is determined that the impacts to the critical resource waters will be no more than minimal.

23. Mitigation. The district engineer will consider the following factors when determining appropriate and practicable mitigation necessary to ensure that adverse effects on the aquatic environment are minimal:

(a) The activity must be designed and constructed to avoid and minimize adverse effects, both temporary and permanent, to waters of the United States to the maximum extent practicable at the project site (i.e., on site).

(b) Mitigation in all its forms (avoiding, minimizing, rectifying, reducing, or compensating for resource losses) will be required to the extent necessary to ensure that the adverse effects to the aquatic environment are minimal.

(c) Compensatory mitigation at a minimum one-for-one ratio will be required for all wetland losses that exceed 1/10-acre and require pre-construction notification, unless the district engineer determines in writing that either some other form of mitigation would be more environmentally appropriate or the adverse effects of the proposed activity are minimal, and provides a project-specific waiver of this requirement. For wetland losses of 1/10-acre or less that require pre-construction notification, the district engineer may determine on a case-by-case basis that compensatory mitigation is required to ensure that the activity results in minimal adverse effects on the aquatic environment. Compensatory mitigation projects provided to offset losses of aquatic resources must comply with the applicable provisions of 33 CFR part 332.

(1) The prospective permittee is responsible for proposing an appropriate compensatory mitigation option if compensatory mitigation is necessary to ensure that the activity results in minimal adverse effects on the aquatic environment.

(2) Since the likelihood of success is greater and the impacts to potentially valuable uplands are reduced, wetland restoration should be the first compensatory mitigation option considered.

(3) If permittee-responsible mitigation is the proposed option, the prospective permittee is responsible for submitting a mitigation plan. A conceptual or detailed mitigation plan may be used by the district engineer to make the decision on the NWP verification request, but a final mitigation plan that addresses the applicable requirements of 33 CFR 332.4(c)(2) – (14) must be approved by the district engineer before the permittee begins work in waters of the United States, unless the district engineer determines that prior approval of the final mitigation plan is not practicable or not necessary to ensure timely completion of the required compensatory mitigation (see 33 CFR 332.3(k)(3)).

(4) If mitigation bank or in-lieu fee program credits are the proposed option, the mitigation plan only needs to address the baseline conditions at the impact site and the number of credits to be provided.

(5) Compensatory mitigation requirements (e.g., resource type and amount to be provided as compensatory mitigation, site protection, ecological performance standards, monitoring requirements) may be addressed through conditions added to the NWP authorization, instead of components of a compensatory mitigation plan.

(d) For losses of streams or other open waters that require pre-construction notification, the district engineer may require compensatory mitigation, such as stream rehabilitation, enhancement, or preservation, to ensure that the activity results in minimal adverse effects on the aquatic environment.

(e) Compensatory mitigation will not be used to increase the acreage losses allowed by the acreage limits of the NWPs. For example, if an NWP has an acreage limit of 1/2-acre, it cannot be used to authorize any project resulting in the loss of greater than 1/2-acre of waters of

the United States, even if compensatory mitigation is provided that replaces or restores some of the lost waters. However, compensatory mitigation can and should be used, as necessary, to ensure that a project already meeting the established acreage limits also satisfies the minimal impact requirement associated with the NWPs.

(f) Compensatory mitigation plans for projects in or near streams or other open waters will normally include a requirement for the restoration or establishment, maintenance, and legal protection (e.g., conservation easements) of riparian areas next to open waters. In some cases, riparian areas may be the only compensatory mitigation required. Riparian areas should consist of native species. The width of the required riparian area will address documented water quality or aquatic habitat loss concerns. Normally, the riparian area will be 25 to 50 feet wide on each side of the stream, but the district engineer may require slightly wider riparian areas to address documented water quality or habitat loss concerns. If it is not possible to establish a riparian area on both sides of a stream, or if the waterbody is a lake or coastal waters, then restoring or establishing a riparian area along a single bank or shoreline may be sufficient. Where both wetlands and open waters exist on the project site, the district engineer will determine the appropriate compensatory mitigation (e.g., riparian areas and/or wetlands compensation) based on what is best for the aquatic environment on a watershed basis. In cases where riparian areas are determined to be the most appropriate form of compensatory mitigation, the district engineer may waive or reduce the requirement to provide wetland compensatory mitigation for wetland losses.

(g) Permittees may propose the use of mitigation banks, in-lieu fee programs, or separate permittee-responsible mitigation. For activities resulting in the loss of marine or estuarine resources, permittee-responsible compensatory mitigation may be environmentally preferable if there are no mitigation banks or in-lieu fee programs in the area that have marine or estuarine credits available for sale or transfer to the permittee. For permittee-responsible mitigation, the special conditions of the NWP verification must clearly indicate the party or parties responsible for the implementation and performance of the compensatory mitigation project, and, if required, its long-term management.

(h) Where certain functions and services of waters of the United States are permanently adversely affected, such as the conversion of a forested or scrub-shrub wetland to a herbaceous wetland in a permanently maintained utility line right-of-way, mitigation may be required to reduce the adverse effects of the project to the minimal level.

24. Safety of Impoundment Structures. To ensure that all impoundment structures are safely designed, the district engineer may require non-Federal applicants to demonstrate that the structures comply with established state dam safety criteria or have been designed by qualified persons. The district engineer may also require documentation that the design has been independently reviewed by similarly qualified persons, and appropriate modifications made to ensure safety.

25. Water Quality. Where States and authorized Tribes, or EPA where applicable, have not previously certified compliance of an NWP with CWA Section 401, individual 401 Water Quality Certification must be obtained or waived (see 33 CFR 330.4(c)). The district engineer or State or Tribe may require additional water quality management measures to ensure that the authorized activity does not result in more than minimal degradation of water quality.

26. Coastal Zone Management. In coastal states where an NWP has not previously received a state coastal zone management consistency concurrence, an individual state coastal zone management consistency concurrence must be obtained, or a presumption of concurrence must occur (see 33 CFR 330.4(d)). The district engineer or a State may require additional measures to ensure that the authorized activity is consistent with state coastal zone management requirements.

27. Regional and Case-By-Case Conditions. The activity must comply with any regional conditions that may have been added by the Division Engineer (see 33 CFR 330.4(e)) and with any case specific conditions added by the Corps or by the state, Indian Tribe, or U.S. EPA in its section 401 Water Quality Certification, or by the state in its Coastal Zone Management Act consistency determination.

28. Use of Multiple Nationwide Permits. The use of more than one NWP for a single and complete project is prohibited, except when the acreage loss of waters of the United States authorized by the NWPs does not exceed the acreage limit of the NWP with the highest specified acreage limit. For example, if a road crossing over tidal waters is constructed under NWP 14, with associated bank stabilization authorized by NWP 13, the maximum acreage loss of waters of the United States for the total project cannot exceed 1/3-acre.

29. Transfer of Nationwide Permit Verifications. If the permittee sells the property associated with a nationwide permit verification, the permittee may transfer the nationwide permit verification to the new owner by submitting a letter to the appropriate Corps district office to validate the transfer. A copy of the nationwide permit verification must be attached to the letter, and the letter must contain the following statement and signature:

"When the structures or work authorized by this nationwide permit are still in existence at the time the property is transferred, the terms and conditions of this nationwide permit, including any special conditions, will continue to be binding on the new owner(s) of the property. To validate the transfer of this nationwide permit and the associated liabilities associated with compliance with its terms and conditions, have the transferee sign and date below."

_____

(Transferee)

_____

(Date)

30. Compliance Certification. Each permittee who receives an NWP verification letter from the Corps must provide a signed certification documenting completion of the authorized activity and any required compensatory mitigation. The success of any required permittee-responsible mitigation, including the achievement of ecological performance standards, will be addressed separately by the district engineer. The Corps will provide the permittee the certification document with the NWP verification letter. The certification document will include:

(a) A statement that the authorized work was done in accordance with the NWP authorization, including any general, regional, or activity-specific conditions;

(b) A statement that the implementation of any required compensatory mitigation was completed in accordance with the permit conditions. If credits from a mitigation bank or in-lieu fee program are used to satisfy the compensatory mitigation requirements, the certification must include the documentation required by 33 CFR 332.3(l)(3) to confirm that the permittee secured the appropriate number and resource type of credits; and

(c) The signature of the permittee certifying the completion of the work and mitigation.

31. Pre-Construction Notification. (a) Timing. Where required by the terms of the NWP, the prospective permittee must notify the district engineer by submitting a pre-construction notification (PCN) as early as possible. The district engineer must determine if the PCN is complete within 30 calendar days of the date of receipt and, if the PCN is determined to be incomplete, notify the prospective permittee within that 30 day period to request the additional information necessary to make the PCN complete. The request must specify the information needed to make the PCN complete. As a general rule, district engineers will request additional information necessary to make the PCN complete only once. However, if the prospective permittee does not provide all of the requested information, then the district engineer will notify the prospective permittee that the PCN is still incomplete and the PCN review process will not commence until all of the requested information has been received by the district engineer. The prospective permittee shall not begin the activity until either:

(1) He or she is notified in writing by the district engineer that the activity may proceed under the NWP with any special conditions imposed by the district or division engineer; or

(2) 45 calendar days have passed from the district engineer's receipt of the complete PCN and the prospective permittee has not received written notice from the district or division engineer. However, if the permittee was required to notify the Corps pursuant to general condition 18 that listed species or critical habitat might be affected or in the vicinity of the project, or to notify the Corps pursuant to general condition 20 that the activity may have the potential to cause effects to historic properties, the permittee cannot begin the activity until receiving written notification from the Corps that there is "no effect" on listed species or "no potential to cause effects" on historic properties, or that any consultation required under Section 7 of the Endangered Species Act (see 33 CFR 330.4(f)) and/or Section 106 of the National Historic Preservation (see 33 CFR 330.4(g)) has been completed. Also, work cannot begin under NWPs 21, 49, or 50 until the permittee has received written approval from the Corps. If the proposed activity requires a written waiver to exceed specified limits of an NWP, the permittee may not begin the activity until the district engineer issues the waiver. If the district or division engineer notifies the permittee in writing that an individual permit is required within 45 calendar days of receipt of a complete PCN, the permittee cannot begin the activity until an individual permit has been obtained. Subsequently, the permittee's right to proceed under the NWP may be modified, suspended, or revoked only in accordance with the procedure set forth in 33 CFR 330.5(d)(2).

(b) Contents of Pre-Construction Notification: The PCN must be in writing and include the following information:

(1) Name, address and telephone numbers of the prospective permittee;

(2) Location of the proposed project;

(3) A description of the proposed project; the project's purpose; direct and indirect adverse environmental effects the project would cause, including the anticipated amount of loss of water of the United States expected to result from the NWP activity, in acres, linear feet, or other appropriate unit of measure; any other NWP(s), regional general permit(s), or individual permit(s) used or intended to be used to authorize any part of the proposed project or any related activity. The description should be sufficiently detailed to allow the district engineer to determine that the adverse effects of the project will be minimal and to determine the need for compensatory mitigation. Sketches should be provided when necessary to show that the activity complies with the terms of the NWP. (Sketches usually clarify the project and when provided results in a quicker decision. Sketches should contain sufficient detail to provide an illustrative description of the proposed activity (e.g., a conceptual plan), but do not need to be detailed engineering plans);

(4) The PCN must include a delineation of wetlands, other special aquatic sites, and other waters, such as lakes and ponds, and perennial, intermittent, and ephemeral streams, on the project site. Wetland delineations must be prepared in accordance with the current method required by the Corps. The permittee may ask the Corps to delineate the special aquatic sites and other waters on the project site, but there may be a delay if the Corps does the delineation, especially if the project site is large or contains many waters of the United States. Furthermore, the 45 day period will not start until the delineation has been submitted to or completed by the Corps, as appropriate;

(5) If the proposed activity will result in the loss of greater than 1/10-acre of wetlands and a PCN is required, the prospective permittee must submit a statement describing how the mitigation requirement will be satisfied, or explaining why the adverse effects are minimal and why compensatory mitigation should not be required. As an alternative, the prospective permittee may submit a conceptual or detailed mitigation plan.

(6) If any listed species or designated critical habitat might be affected or is in the vicinity of the project, or if the project is located in designated critical habitat, for non-Federal applicants the PCN must include the name(s) of those endangered or threatened species that might be affected by the proposed work or utilize the designated critical habitat that may be affected by the proposed work. Federal applicants must provide documentation demonstrating compliance with the Endangered Species Act; and

(7) For an activity that may affect a historic property listed on, determined to be eligible for listing on, or potentially eligible for listing on, the National Register of Historic Places, for non-Federal applicants the PCN must state which historic property may be affected by the proposed work or include a vicinity map indicating the location of the historic property. Federal applicants must provide documentation demonstrating compliance with Section 106 of the National Historic Preservation Act.

(c) Form of Pre-Construction Notification: The standard individual permit application form (Form ENG 4345) may be used, but the completed application form must clearly indicate that it is a PCN and must include all of the information required in paragraphs (b)(1) through (7) of this general condition. A letter containing the required information may also be used.

(d) Agency Coordination: (1) The district engineer will consider any comments from Federal and state agencies concerning the proposed activity's compliance with the terms and conditions of the NWPs and the need for mitigation to reduce the project's adverse environmental effects to a minimal level.

(2) For all NWP activities that require pre-construction notification and result in the loss of greater than 1/2-acre of waters of the United States, for NWP 21, 29, 39, 40, 42, 43, 44, 50, 51, and 52 activities that require pre-construction notification and will result in the loss of greater than 300 linear feet of intermittent and ephemeral stream bed, and for all NWP 48 activities that require pre-construction notification, the district engineer will immediately provide (e.g., via e-mail, facsimile transmission, overnight mail, or other expeditious manner) a copy of the complete PCN to the appropriate Federal or state offices (U.S. FWS, state natural resource or water quality agency, EPA, State Historic Preservation Officer (SHPO) or Tribal Historic Preservation Office (THPO), and, if appropriate, the NMFS). With the exception of NWP 37, these agencies will have 10 calendar days from the date the material is transmitted to telephone or fax the district engineer notice that they intend to provide substantive, site-specific comments. The comments must explain why the agency believes the adverse effects will be more than minimal. If so contacted by an agency, the district engineer will wait an additional 15 calendar days before making a decision on the pre-construction notification. The district engineer will fully consider agency comments received within the specified time frame concerning the proposed activity's compliance with the terms and conditions of the NWPs, including the need for mitigation to ensure the net adverse environmental effects to the aquatic environment of the proposed activity are minimal. The district engineer will provide no response to the resource agency, except as provided below. The district engineer will indicate in the administrative record associated with each pre-construction notification that the resource agencies' concerns were considered. For NWP 37, the emergency watershed protection and rehabilitation activity may proceed immediately in cases where there is an unacceptable hazard to life or a significant loss of property or economic hardship will occur. The district engineer will consider any comments received to decide whether the NWP 37 authorization should be modified, suspended, or revoked in accordance with the procedures at 33 CFR 330.5.

(3) In cases of where the prospective permittee is not a Federal agency, the district engineer will provide a response to NMFS within 30 calendar days of receipt of any Essential Fish Habitat conservation recommendations, as required by Section 305(b)(4)(B) of the Magnuson-Stevens Fishery Conservation and Management Act.

(4) Applicants are encouraged to provide the Corps with either electronic files or multiple copies of pre-construction notifications to expedite agency coordination.

D. District Engineer's Decision

1. In reviewing the PCN for the proposed activity, the district engineer will determine whether the activity authorized by the NWP will result in more than minimal individual or cumulative adverse environmental effects or may be contrary to the public interest. For a linear project, this determination will include an evaluation of the individual crossings to determine whether they individually satisfy the terms and conditions of the NWP(s), as well as the cumulative effects caused by all of the crossings authorized by NWP. If an applicant requests a waiver of the 300 linear foot limit on impacts to intermittent or ephemeral streams or of an otherwise applicable limit, as provided for in NWPs 13, 21, 29, 36, 39, 40, 42, 43, 44, 50, 51 or 52, the district engineer will only grant the waiver upon a written determination that the NWP activity will result in minimal adverse effects. When making minimal effects determinations the district engineer will consider the direct and indirect effects caused by the NWP activity. The district engineer will also consider site specific factors, such as the environmental setting in the

vicinity of the NWP activity, the type of resource that will be affected by the NWP activity, the functions provided by the aquatic resources that will be affected by the NWP activity, the degree or magnitude to which the aquatic resources perform those functions, the extent that aquatic resource functions will be lost as a result of the NWP activity (e.g., partial or complete loss), the duration of the adverse effects (temporary or permanent), the importance of the aquatic resource functions to the region (e.g., watershed or ecoregion), and mitigation required by the district engineer. If an appropriate functional assessment method is available and practicable to use, that assessment method may be used by the district engineer to assist in the minimal adverse effects determination. The district engineer may add case-specific special conditions to the NWP authorization to address site-specific environmental concerns.

2. If the proposed activity requires a PCN and will result in a loss of greater than 1/10-acre of wetlands, the prospective permittee should submit a mitigation proposal with the PCN. Applicants may also propose compensatory mitigation for projects with smaller impacts. The district engineer will consider any proposed compensatory mitigation the applicant has included in the proposal in determining whether the net adverse environmental effects to the aquatic environment of the proposed activity are minimal. The compensatory mitigation proposal may be either conceptual or detailed. If the district engineer determines that the activity complies with the terms and conditions of the NWP and that the adverse effects on the aquatic environment are minimal, after considering mitigation, the district engineer will notify the permittee and include any activity-specific conditions in the NWP verification the district engineer deems necessary. Conditions for compensatory mitigation requirements must comply with the appropriate provisions at 33 CFR 332.3(k). The district engineer must approve the final mitigation plan before the permittee commences work in waters of the United States, unless the district engineer determines that prior approval of the final mitigation plan is not practicable or not necessary to ensure timely completion of the required compensatory mitigation. If the prospective permittee elects to submit a compensatory mitigation plan with the PCN, the district engineer will expeditiously review the proposed compensatory mitigation plan. The district engineer must review the proposed compensatory mitigation plan within 45 calendar days of receiving a complete PCN and determine whether the proposed mitigation would ensure no more than minimal adverse effects on the aquatic environment. If the net adverse effects of the project on the aquatic environment (after consideration of the compensatory mitigation proposal) are determined by the district engineer to be minimal, the district engineer will provide a timely written response to the applicant. The response will state that the project can proceed under the terms and conditions of the NWP, including any activity-specific conditions added to the NWP authorization by the district engineer.

3. If the district engineer determines that the adverse effects of the proposed work are more than minimal, then the district engineer will notify the applicant either: (a) That the project does not qualify for authorization under the NWP and instruct the applicant on the procedures to seek authorization under an individual permit; (b) that the project is authorized under the NWP subject to the applicant's submission of a mitigation plan that would reduce the adverse effects on the aquatic environment to the minimal level; or (c) that the project is authorized under the NWP with specific modifications or conditions. Where the district engineer determines that mitigation is required to ensure no more than minimal adverse effects occur to the aquatic environment, the activity will be authorized within the 45-day PCN period, with activity-specific

conditions that state the mitigation requirements. The authorization will include the necessary conceptual or detailed mitigation or a requirement that the applicant submit a mitigation plan that would reduce the adverse effects on the aquatic environment to the minimal level. When mitigation is required, no work in waters of the United States may occur until the district engineer has approved a specific mitigation plan or has determined that prior approval of a final mitigation plan is not practicable or not necessary to ensure timely completion of the required compensatory mitigation.

FURTHER INFORMATION

1. District Engineers have authority to determine if an activity complies with the terms and conditions of an NWP.
2. NWPs do not obviate the need to obtain other federal, state, or local permits, approvals, or authorizations required by law.
3. NWPs do not grant any property rights or exclusive privileges.
4. NWPs do not authorize any injury to the property or rights of others.
5. NWPs do not authorize interference with any existing or proposed Federal project.

DEFINITIONS

Best management practices (BMPs): Policies, practices, procedures, or structures implemented to mitigate the adverse environmental effects on surface water quality resulting from development. BMPs are categorized as structural or non-structural.

Compensatory mitigation: The restoration (re-establishment or rehabilitation), establishment (creation), enhancement, and/or in certain circumstances preservation of aquatic resources for the purposes of offsetting unavoidable adverse impacts which remain after all appropriate and practicable avoidance and minimization has been achieved.

Currently serviceable: Useable as is or with some maintenance, but not so degraded as to essentially require reconstruction.

Direct effects: Effects that are caused by the activity and occur at the same time and place.

Discharge: The term “discharge” means any discharge of dredged or fill material.

Enhancement: The manipulation of the physical, chemical, or biological characteristics of an aquatic resource to heighten, intensify, or improve a specific aquatic resource function(s). Enhancement results in the gain of selected aquatic resource function(s), but may also lead to a decline in other aquatic resource function(s). Enhancement does not result in a gain in aquatic resource area.

Ephemeral stream: An ephemeral stream has flowing water only during, and for a short duration after, precipitation events in a typical year. Ephemeral stream beds are located above the water table year-round. Groundwater is not a source of water for the stream. Runoff from rainfall is the primary source of water for stream flow.

Establishment (creation): The manipulation of the physical, chemical, or biological characteristics present to develop an aquatic resource that did not previously exist at an upland site. Establishment results in a gain in aquatic resource area.

High Tide Line: The line of intersection of the land with the water’s surface at the maximum height reached by a rising tide. The high tide line may be determined, in the absence

of actual data, by a line of oil or scum along shore objects, a more or less continuous deposit of fine shell or debris on the foreshore or berm, other physical markings or characteristics, vegetation lines, tidal gages, or other suitable means that delineate the general height reached by a rising tide. The line encompasses spring high tides and other high tides that occur with periodic frequency but does not include storm surges in which there is a departure from the normal or predicted reach of the tide due to the piling up of water against a coast by strong winds such as those accompanying a hurricane or other intense storm.

Historic Property: Any prehistoric or historic district, site (including archaeological site), building, structure, or other object included in, or eligible for inclusion in, the National Register of Historic Places maintained by the Secretary of the Interior. This term includes artifacts, records, and remains that are related to and located within such properties. The term includes properties of traditional religious and cultural importance to an Indian tribe or Native Hawaiian organization and that meet the National Register criteria (36 CFR part 60).

Independent utility: A test to determine what constitutes a single and complete non-linear project in the Corps regulatory program. A project is considered to have independent utility if it would be constructed absent the construction of other projects in the project area. Portions of a multi-phase project that depend upon other phases of the project do not have independent utility. Phases of a project that would be constructed even if the other phases were not built can be considered as separate single and complete projects with independent utility.

Indirect effects: Effects that are caused by the activity and are later in time or farther removed in distance, but are still reasonably foreseeable.

Intermittent stream: An intermittent stream has flowing water during certain times of the year, when groundwater provides water for stream flow. During dry periods, intermittent streams may not have flowing water. Runoff from rainfall is a supplemental source of water for stream flow.

Loss of waters of the United States: Waters of the United States that are permanently adversely affected by filling, flooding, excavation, or drainage because of the regulated activity. Permanent adverse effects include permanent discharges of dredged or fill material that change an aquatic area to dry land, increase the bottom elevation of a waterbody, or change the use of a waterbody. The acreage of loss of waters of the United States is a threshold measurement of the impact to jurisdictional waters for determining whether a project may qualify for an NWP; it is not a net threshold that is calculated after considering compensatory mitigation that may be used to offset losses of aquatic functions and services. The loss of stream bed includes the linear feet of stream bed that is filled or excavated. Waters of the United States temporarily filled, flooded, excavated, or drained, but restored to pre-construction contours and elevations after construction, are not included in the measurement of loss of waters of the United States. Impacts resulting from activities eligible for exemptions under Section 404(f) of the Clean Water Act are not considered when calculating the loss of waters of the United States.

Non-tidal wetland: A non-tidal wetland is a wetland that is not subject to the ebb and flow of tidal waters. The definition of a wetland can be found at 33 CFR 328.3(b). Non-tidal wetlands contiguous to tidal waters are located landward of the high tide line (i.e., spring high tide line).

Open water: For purposes of the NWPs, an open water is any area that in a year with normal patterns of precipitation has water flowing or standing above ground to the extent that an ordinary high water mark can be determined. Aquatic vegetation within the area of standing or

flowing water is either non-emergent, sparse, or absent. Vegetated shallows are considered to be open waters. Examples of "open waters" include rivers, streams, lakes, and ponds.

Ordinary High Water Mark: An ordinary high water mark is a line on the shore established by the fluctuations of water and indicated by physical characteristics, or by other appropriate means that consider the characteristics of the surrounding areas (see 33 CFR 328.3(e)).

Perennial stream: A perennial stream has flowing water year-round during a typical year. The water table is located above the stream bed for most of the year. Groundwater is the primary source of water for stream flow. Runoff from rainfall is a supplemental source of water for stream flow.

Practicable: Available and capable of being done after taking into consideration cost, existing technology, and logistics in light of overall project purposes.

Pre-construction notification: A request submitted by the project proponent to the Corps for confirmation that a particular activity is authorized by nationwide permit. The request may be a permit application, letter, or similar document that includes information about the proposed work and its anticipated environmental effects. Pre-construction notification may be required by the terms and conditions of a nationwide permit, or by regional conditions. A pre-construction notification may be voluntarily submitted in cases where pre-construction notification is not required and the project proponent wants confirmation that the activity is authorized by nationwide permit.

Preservation: The removal of a threat to, or preventing the decline of, aquatic resources by an action in or near those aquatic resources. This term includes activities commonly associated with the protection and maintenance of aquatic resources through the implementation of appropriate legal and physical mechanisms. Preservation does not result in a gain of aquatic resource area or functions.

Re-establishment: The manipulation of the physical, chemical, or biological characteristics of a site with the goal of returning natural/historic functions to a former aquatic resource. Re-establishment results in rebuilding a former aquatic resource and results in a gain in aquatic resource area and functions.

Rehabilitation: The manipulation of the physical, chemical, or biological characteristics of a site with the goal of repairing natural/historic functions to a degraded aquatic resource. Rehabilitation results in a gain in aquatic resource function, but does not result in a gain in aquatic resource area.

Restoration: The manipulation of the physical, chemical, or biological characteristics of a site with the goal of returning natural/historic functions to a former or degraded aquatic resource. For the purpose of tracking net gains in aquatic resource area, restoration is divided into two categories: re-establishment and rehabilitation.

Riffle and pool complex: Riffle and pool complexes are special aquatic sites under the 404(b)(1) Guidelines. Riffle and pool complexes sometimes characterize steep gradient sections of streams. Such stream sections are recognizable by their hydraulic characteristics. The rapid movement of water over a course substrate in riffles results in a rough flow, a turbulent surface, and high dissolved oxygen levels in the water. Pools are deeper areas associated with riffles. A slower stream velocity, a streaming flow, a smooth surface, and a finer substrate characterize pools.

Riparian areas: Riparian areas are lands adjacent to streams, lakes, and estuarine-marine shorelines. Riparian areas are transitional between terrestrial and aquatic ecosystems, through

which surface and subsurface hydrology connects riverine, lacustrine, estuarine, and marine waters with their adjacent wetlands, non-wetland waters, or uplands. Riparian areas provide a variety of ecological functions and services and help improve or maintain local water quality. (See general condition 23.)

Shellfish seeding: The placement of shellfish seed and/or suitable substrate to increase shellfish production. Shellfish seed consists of immature individual shellfish or individual shellfish attached to shells or shell fragments (i.e., spat on shell). Suitable substrate may consist of shellfish shells, shell fragments, or other appropriate materials placed into waters for shellfish habitat.

Single and complete linear project: A linear project is a project constructed for the purpose of getting people, goods, or services from a point of origin to a terminal point, which often involves multiple crossings of one or more waterbodies at separate and distant locations. The term "single and complete project" is defined as that portion of the total linear project proposed or accomplished by one owner/developer or partnership or other association of owners/developers that includes all crossings of a single water of the United States (i.e., a single waterbody) at a specific location. For linear projects crossing a single or multiple waterbodies several times at separate and distant locations, each crossing is considered a single and complete project for purposes of NWP authorization. However, individual channels in a braided stream or river, or individual arms of a large, irregularly shaped wetland or lake, etc., are not separate waterbodies, and crossings of such features cannot be considered separately.

Single and complete non-linear project: For non-linear projects, the term "single and complete project" is defined at 33 CFR 330.2(i) as the total project proposed or accomplished by one owner/developer or partnership or other association of owners/developers. A single and complete non-linear project must have independent utility (see definition of "independent utility"). Single and complete non-linear projects may not be "piecemealed" to avoid the limits in an NWP authorization.

Stormwater management: Stormwater management is the mechanism for controlling stormwater runoff for the purposes of reducing downstream erosion, water quality degradation, and flooding and mitigating the adverse effects of changes in land use on the aquatic environment.

Stormwater management facilities: Stormwater management facilities are those facilities, including but not limited to, stormwater retention and detention ponds and best management practices, which retain water for a period of time to control runoff and/or improve the quality (i.e., by reducing the concentration of nutrients, sediments, hazardous substances and other pollutants) of stormwater runoff.

Stream bed: The substrate of the stream channel between the ordinary high water marks. The substrate may be bedrock or inorganic particles that range in size from clay to boulders. Wetlands contiguous to the stream bed, but outside of the ordinary high water marks, are not considered part of the stream bed.

Stream channelization: The manipulation of a stream's course, condition, capacity, or location that causes more than minimal interruption of normal stream processes. A channelized stream remains a water of the United States.

Structure: An object that is arranged in a definite pattern of organization. Examples of structures include, without limitation, any pier, boat dock, boat ramp, wharf, dolphin, weir, boom, breakwater, bulkhead, revetment, riprap, jetty, artificial island, artificial reef, permanent

mooring structure, power transmission line, permanently moored floating vessel, piling, aid to navigation, or any other manmade obstacle or obstruction.

Tidal wetland: A tidal wetland is a wetland (i.e., water of the United States) that is inundated by tidal waters. The definitions of a wetland and tidal waters can be found at 33 CFR 328.3(b) and 33 CFR 328.3(f), respectively. Tidal waters rise and fall in a predictable and measurable rhythm or cycle due to the gravitational pulls of the moon and sun. Tidal waters end where the rise and fall of the water surface can no longer be practically measured in a predictable rhythm due to masking by other waters, wind, or other effects. Tidal wetlands are located channelward of the high tide line, which is defined at 33 CFR 328.3(d).

Vegetated shallows: Vegetated shallows are special aquatic sites under the 404(b)(1) Guidelines. They are areas that are permanently inundated and under normal circumstances have rooted aquatic vegetation, such as seagrasses in marine and estuarine systems and a variety of vascular rooted plants in freshwater systems.

Waterbody: For purposes of the NWPs, a waterbody is a jurisdictional water of the United States. If a jurisdictional wetland is adjacent – meaning bordering, contiguous, or neighboring – to a waterbody determined to be a water of the United States under 33 CFR 328.3(a)(1)-(6), that waterbody and its adjacent wetlands are considered together as a single aquatic unit (see 33 CFR 328.4(c)(2)). Examples of "waterbodies" include streams, rivers, lakes, ponds, and wetlands.

Final Regional Conditions 2012

NOTICE ABOUT WEB LINKS IN THIS DOCUMENT:
The web links (both internal to our District and any external links to collaborating agencies) in this document are valid at the time of publication. However, the Wilmington District Regulatory Program web page addresses, as with other agency web sites, may change over the timeframe of the five-year Nationwide Permit renewal cycle, in response to policy mandates or technology advances. While we will make every effort to check on the integrity of our web links and provide re-direct pages whenever possible, we ask that you report any broken links to us so we can keep the page information current and usable. We apologize in advanced for any broken links that you may encounter, and we ask that you navigate from the regulatory home page (wetlands and stream permits) of the Wilmington District Corps of Engineers, to the "Permits" section of our web site to find links for pages that cannot be found by clicking directly on the listed web link in this document.

Final 2012 Regional Conditions for Nationwide Permits (NWP) in the Wilmington District

1.0 Excluded Waters

The Corps has identified waters that will be excluded from the use of all NWP's during certain timeframes. These waters are:

1.1 Anadromous Fish Spawning Areas

Waters of the United States identified by either the North Carolina Division of Marine Fisheries (NCDMF) or the North Carolina Wildlife Resources Commission (NCWRC) as anadromous fish spawning areas are excluded during the period between February 15 and June 30, without prior written approval from NCDMF or NCWRC and the Corps.

1.2 Trout Waters Moratorium

Waters of the United States in the twenty-five designated trout counties of North Carolina are excluded during the period between October 15 and April 15 without prior written approval from the NCWRC. (See Section 2.7 for a list of the twenty-five trout counties).

1.3 Sturgeon Spawning Areas as Designated by the National Marine Fisheries Service (NMFS)

Waters of the United States designated as sturgeon spawning areas are excluded during the period between February 1 and June 30, without prior written approval from the NMFS.

2.0 Waters Requiring Additional Notification

The Corps has identified waters that will be subject to additional notification requirements for activities authorized by all NWP's. These waters are:

2.1 Western NC Counties that Drain to Designated Critical Habitat

For proposed activities within Waters of the U.S. that require a Pre-Construction Notification pursuant to General Condition 31 (PCN) and are located in the sixteen counties listed below, applicants must provide a copy of the PCN to the US Fish and Wildlife Service, 160 Zillicoa Street, Asheville, North Carolina 28801. This PCN must be sent concurrently to the US Fish and Wildlife Service and the Corps Asheville Regulatory Field Office. Please see General Condition 18 for specific notification requirements related to Federally Endangered Species and the following website for information on the location of designated critical habitat.

Counties with tributaries that drain to designated critical habitat that require notification to the Asheville US Fish and Wildlife Service: Avery, Cherokee, Forsyth, Graham, Haywood, Henderson, Jackson, Macon Mecklenburg, Mitchell, Stokes, Surry, Swain, Transylvania, Union and Yancey.

Website and office addresses for Endangered Species Act Information:

The Wilmington District has developed the following website for applicants which provides guidelines on how to review linked websites and maps in order to fulfill NWP general condition 18 requirements: http://www.saw.usace.army.mil/wetlands/ESA

Applicants who do not have internet access may contact the appropriate US Fish and Wildlife Service offices listed below or the US Army Corps of Engineers at (910) 251- 4633:

US Fish and Wildlife Service
Asheville Field Office
160 Zillicoa Street
Asheville, NC 28801
Telephone: (828) 258-3939

Asheville US Fish and Wildlife Service Office counties: All counties west of and including Anson, Stanly, Davidson, Forsyth and Stokes Counties

US Fish and Wildlife Service
Raleigh Field Office
Post Office Box 33726
Raleigh, NC 27636-3726
Telephone: (919) 856-4520

Raleigh US Fish and Wildlife Service Office counties: all counties east of and including Richmond, Montgomery, Randolph, Guilford, and Rockingham Counties.

2.2 Special Designation Waters

Prior to the use of any NWP in any of the following identified waters and contiguous wetlands in North Carolina, applicants must comply with Nationwide Permit General Condition 31 (PCN). The North Carolina waters and contiguous wetlands that require additional notification requirements are:

"Outstanding Resource Waters" (ORW) or "High Quality Waters" (HQW) as designated by the North Carolina Environmental Management Commission; "Inland Primary Nursery Areas" (IPNA) as designated by the NCWRC; "Contiguous Wetlands" as defined by the North Carolina Environmental Management Commission; or "Primary Nursery Areas" (PNA) as designated by the North Carolina Marine Fisheries Commission.

2.3 Coastal Area Management Act (CAMA) Areas of Environmental Concern

Non-federal applicants for any NWP in a designated "Area of Environmental Concern" (AEC) in the twenty (20) counties of Eastern North Carolina covered by the North Carolina Coastal Area Management Act (CAMA) must also obtain the required CAMA permit. Development activities for non-federal projects may not commence until a copy of the approved CAMA permit is furnished to the appropriate Wilmington District Regulatory Field Office (Wilmington Field Office – 69 Darlington Avenue, Wilmington, NC 28403 or Washington Field Office – 2407 West 5th Street, Washington, NC 27889).

2.4 Barrier Islands

Prior to the use of any NWP on a barrier island of North Carolina, applicants must comply with Nationwide Permit General Condition 31 (PCN).

2.5 Mountain or Piedmont Bogs

Prior to the use of any NWP in a Bog classified by the North Carolina Wetland Assessment Methodology (NCWAM), applicants shall comply with Nationwide Permit General Condition 31 (PCN). The latest version of NCWAM is located on the NC DWQ web site at: http://portal.ncdenr.org/web/wq/swp/ws/pdu/ncwam .

2.6 Animal Waste Facilities

Prior to use of any NWP for construction of animal waste facilities in waters of the US, including wetlands, applicants shall comply with Nationwide Permit General Condition 31 (PCN).

2.7 Trout Waters

Prior to any discharge of dredge or fill material into streams or waterbodies within the twenty-five (25) designated trout counties of North Carolina, the applicant shall comply with Nationwide Permit General Condition 31 (PCN). The applicant shall also provide a copy of the notification to the appropriate NCWRC office to facilitate the determination of any potential

impacts to designated Trout Waters. Notification to the Corps of Engineers will include a statement with the name of the NCWRC biologist contacted, the date of the notification, the location of work, a delineation of wetlands, a discussion of alternatives to working in the mountain trout waters, why alternatives were not selected, and a plan to provide compensatory mitigation for all unavoidable adverse impacts to mountain trout waters.

NCWRC and NC Trout Counties

Western Piedmont Region Coordinator	Alleghany	Caldwell	Watauga
20830 Great Smoky Mtn. Expressway	Ashe	Mitchell	Wilkes
Waynesville, NC 28786	Avery	Stokes	
Telephone: (828) 452-2546	Burke	Surry	

Mountain Region Coordinator	Buncombe	Henderson	Polk
20830 Great Smoky Mtn. Expressway	Cherokee	Jackson	Rutherford
Waynesville, NC 28786	Clay	Macon	Swain
Telephone: (828) 452-2546	Graham	Madison	Transylvania
Fax: (828) 452-7772	Haywood	McDowell	Yancey

3.0 List of Corps Regional Conditions for All Nationwide Permits

The following conditions apply to all Nationwide Permits in the Wilmington District:

3.1 Limitation of Loss of Perennial Stream Bed

NWPs may not be used for activities that may result in the loss or degradation of greater than 300 total linear feet of perennial, intermittent or ephemeral stream, unless the District Commander has waived the 300 linear foot limit for ephemeral and intermittent streams on a case-by-case basis and he determines that the proposed activity will result in minimal individual and cumulative adverse impacts to the aquatic environment. Loss of stream includes the linear feet of stream bed that is filled, excavated, or flooded by the proposed activity. Waivers for the loss of ephemeral and intermittent streams must be in writing and documented by appropriate/accepted stream quality assessments*. This waiver only applies to the 300 linear feet threshold for NWPs.

*NOTE: Applicants should utilize the most current methodology prescribed by Wilmington District to assess stream function and quality. Information can be found at:

http://www.saw.usace.army.mil/wetlands/permits/nwp/nwp2012 (see “Quick Links”)

3.2 Mitigation for Loss of Stream Bed

For any NWP that results in a loss of more than 150 linear feet of perennial and/or ephemeral/intermittent stream, the applicant shall provide a mitigation proposal to compensate for more than minimal individual and cumulative adverse impacts to the aquatic environment. For stream losses less than 150 linear feet, that require a PCN, the District Commander may determine, on a case-by-case basis that compensatory mitigation is required to ensure that the activity results in minimal adverse effect on the aquatic environment.

3.3 Pre-construction Notification for Loss of Streambed Exceeding 150 Feet.

Prior to use of any NWP for any activity which impacts more than 150 total linear feet of perennial stream or ephemeral/ intermittent stream, the applicant must comply with Nationwide Permit General Condition 31 (PCN). This applies to NWPs that do not have specific notification requirements. If a NWP has specific notification requirements, the requirements of the NWP should be followed.

3.4 Restriction on Use of Live Concrete

For all NWPs which allow the use of concrete as a building material, live or fresh concrete, including bags of uncured concrete, may not come into contact with the water in or entering into waters of the US. Water inside coffer dams or casings that has been in contact with wet concrete shall only be returned to waters of the US when it is no longer poses a threat to aquatic organisms.

3.5 Requirements for Using Riprap for Bank Stabilization

For all NWPs that allow for the use of riprap material for bank stabilization, the following measures shall be applied:

3.5.1. Filter cloth must be placed underneath the riprap as an additional requirement of its use in North Carolina waters.

3.5.2. The placement of riprap shall be limited to the areas depicted on submitted work plan drawings.

3.5.3. The riprap material shall be clean and free from loose dirt or any pollutant except in trace quantities that would not have an adverse environmental effect.

3.5.4. It shall be of a size sufficient to prevent its movement from the authorized alignment by natural forces under normal conditions.

3.5.5. The riprap material shall consist of clean rock or masonry material such as, but not limited to, granite, marl, or broken concrete.

3.5.6. A waiver from the specifications in this Regional Condition may be requested in writing. The waiver will only be issued if it can be demonstrated that the impacts of complying with this Regional condition would result in greater adverse impacts to the aquatic environment.

3.6 Safe Passage Requirements for Culvert Placement

For all NWPs that involve the construction/installation of culverts, measures will be included in the construction/installation that will promote the safe passage of fish and other aquatic organisms. The dimension, pattern, and profile of the stream above and below a pipe or culvert should not be modified by widening the stream channel or by reducing the depth of the stream in connection with the construction activity. The width, height, and gradient of a proposed culvert should be such as to pass the average historical low flow and spring flow without adversely altering flow velocity. Spring flow should be determined from gage data, if available. In the absence of such data, bankfull flow can be used as a comparable level.

In the twenty (20) counties of North Carolina designated as coastal counties by the Coastal Area Management Act (CAMA): All pipes/culverts must be sufficiently sized to allow for the burial of the bottom of the pipe/culvert at least one foot below normal bed elevation when they are placed within the Public Trust Area of Environmental Concern (AEC) and/or the Estuarine Waters AEC as designated by CAMA, and/or all streams appearing as blue lines on United States Geological Survey (USGS) 7.5-minute quadrangle maps.

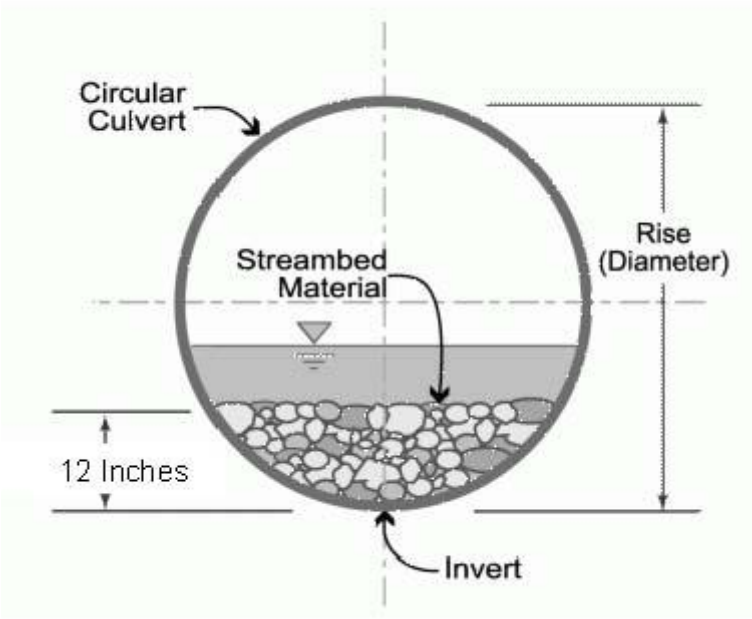

In all other counties: Culverts greater than 48 inches in diameter will be buried at least one foot below the bed of the stream. Culverts 48 inches in diameter or less shall be buried or placed on the stream bed as practicable and appropriate to maintain aquatic passage, and every effort shall be made to maintain the existing channel slope. The bottom of the culvert must be placed at a

depth below the natural stream bottom to provide for passage during drought or low flow conditions.

Culverts are to be designed and constructed in a manner that minimizes destabilization and head cutting. Destabilizing the channel and head cutting upstream should be considered and appropriate actions incorporated in the design and placement of the culvert.

A waiver from the depth specifications in this condition may be requested in writing. The waiver will be issued if it can be demonstrated that the proposal would result in the least impacts to the aquatic environment.

All counties: Culverts placed within riparian and/or riverine wetlands must be installed in a manner that does not restrict the flow and circulation patterns of waters of the United States. Culverts placed across wetland fills purely for the purposes of equalizing surface water do not have to be buried.

3.7 Notification to NCDENR Shellfish Sanitation Section

Applicants shall notify the NCDENR Shellfish Sanitation Section prior to dredging in or removing sediment from an area closed to shell fishing where the effluent may be released to an area open for shell fishing or swimming in order to avoid contamination from the disposal area and cause a temporary shellfish closure to be made. Such notification shall also be provided to the appropriate Corps of Engineers Regulatory Field Office. Any disposal of sand to the ocean beach should occur between November 1 and April 30 when recreational usage is low. Only clean sand should be used and no dredged sand from closed shell fishing areas may be used. If beach disposal were to occur at times other than stated above or if sand from a closed shell fishing area is to be used, a swimming advisory shall be posted, and a press release shall be issued by the permittee.

3.8 Preservation of Submerged Aquatic Vegetation

Adverse impacts to Submerged Aquatic Vegetation (SAV) are not authorized by any NWP within any of the twenty coastal counties defined by North Carolina's Coastal Area Management Act of 1974 (CAMA).

3.9 Sedimentation and Erosion Control Structures and Measures

3.9.1. All PCNs will identify and describe sedimentation and erosion control structures and measures proposed for placement in waters of the US. The structures and measures should be depicted on maps, surveys or drawings showing location and impacts to jurisdictional wetlands and streams.

North Carolina Department of Environment and Natural Resources
Division of Water Quality

Pat McCrory
Governor

Thomas A. Reeder
Acting Director

John E. Skvarla, III
Secretary

July 12, 2013
Nash County
NCDWQ Project No. 20130691
Bridge 59 on SR 1109
TIP No. BD-5104K

APPROVAL of 401 WATER QUALITY CERTIFICATION and NEUSE BUFFER AUTHORIZATION, with ADDITIONAL CONDITIONS

Mr. John W. Rouse, Jr, P.E., Division Engineer
NCDOT, Division 4
PO Box 3165
Wilson, NC 27895-3165

Dear Mr. Rouse:

You have our approval, in accordance with the conditions listed below, for the following impacts for the purpose of replacing Bridge 59 in Nash County:

Wetland Impacts in the Neuse River Basin

Site	Excavation (ac)	Hand Clearing (ac)	Total Wetland Impact (ac)
1	0.01	0.01	0.02
Total	**0.01**	**0.01**	**0.02**

Total Wetland Impact for Project: 0.02 acres.

Neuse Riparian Buffer Impacts

Site	Zone 1 Impact (sq ft)	Zone 1 Buffer Mitigation Required (using 3:1 ratio)		Zone 2 Impact (sq ft)	Zone 2 Buffer Mitigation Required (using 1.5:1 ratio)
1	2116	N/A		934	N/A
Totals	**2116**	**0**		**934**	**0**

* n/a = Total for Site is less than 1/3 acre and 150 linear feet of impact, no mitigation required
Total Buffer Impact for Project: 3050 square feet.

The project shall be constructed in accordance with your application received July 9, 2013. After reviewing your application, we have decided that these impacts are covered by General Water Quality Certification Number 3883. This certification corresponds to the Nationwide Permit 3 issued by the Corps of Engineers. This approval is also valid for the Neuse Riparian Buffer Rules (15A NCAC 2B.0233). In addition, you should acquire any other federal, state or local permits before you proceed with your project including (but not limited to) Sediment and Erosion Control, Non-Discharge and Water Supply Watershed regulations. This approval will expire with the accompanying 404 permit.

Transportation and Permitting Unit
1650 Mail Service Center, Raleigh, North Carolina 27699-1617
Location: 512 N. Salisbury St. Raleigh, North Carolina 27604
Phone: 919-807-6300 \ FAX: 919-807-6492
Internet: www.ncwaterquality.org

An Equal Opportunity \ Affirmative Action Employer

One NorthCarolina Naturally

NCDENR
North Carolina Department of Environment and Natural Resources
Division of Water Quality
Thomas A. Reeder
Acting Director

Pat McCrory
Governor

John E. Skvarla, III
Secretary

RECEIVED
JUL 30 2013
N. C. Dept. of Transportation
Division Four

July 12, 2013
Nash County
NCDWQ Project No. 20130692
Bridge 60 on SR 1109
TIP No. BD-5104L

APPROVAL of 401 WATER QUALITY CERTIFICATION and NEUSE BUFFER AUTHORIZATION, with ADDITIONAL CONDITIONS

Mr. John W. Rouse, Jr, P.E., Division Engineer
NCDOT, Division 4
PO Box 3165
Wilson, NC 27895-3165

Dear Mr. Rouse:

You have our approval, in accordance with the conditions listed below, for the following impacts for the purpose of replacing Bridge 60 in Nash County:

Wetland Impacts in the Neuse River Basin

Site	Permanent Fill (ac)	Mechanized Clearing (ac)	Hand Clearing (ac)	Total Wetland Impact (ac)
1	0.01	0.01	0.01	0.03
Total	**0.01**	**0.01**	**0.01**	**0.03**

Total Wetland Impact for Project: 0.03 acres.

Neuse Riparian Buffer Impacts

Site	Zone 1 Impact (sq ft)	Zone 1 Buffer Mitigation Required (using 3:1 ratio)		Zone 2 Impact (sq ft)	Zone 2 Buffer Mitigation Required (using 1.5:1 ratio)
1	2040	N/A		900	N/A
Totals	**2040**	**0**		**900**	**0**

* n/a = Total for Site is less than 1/3 acre and 150 linear feet of impact, no mitigation required

Total Buffer Impact for Project: 2940 square feet.

The project shall be constructed in accordance with your application received July 9, 2013. After reviewing your application, we have decided that these impacts are covered by General Water Quality Certification Number 3883. This certification corresponds to the Nationwide Permit 3 issued by the Corps of Engineers. This approval is also valid for the Neuse Riparian Buffer Rules (15A NCAC 2B.0233). In addition, you should acquire any other federal, state or local permits before you proceed with your project including (but not limited to) Sediment and Erosion Control, Non-Discharge and Water Supply Watershed regulations. This approval will expire with the accompanying 404 permit.

Transportation and Permitting Unit
1650 Mail Service Center, Raleigh, North Carolina 27699-1617
Location: 512 N. Salisbury St. Raleigh, North Carolina 27604
Phone: 919-807-6300 \ FAX: 919-807-6492
Internet: www.ncwaterquality.org

One NorthCarolina Naturally

An Equal Opportunity \ Affirmative Action Employer

This approval is valid solely for the purpose and design described in your application (unless modified below). Should your project change, you must notify the NCDWQ and submit a new application. If the property is sold, the new owner must be given a copy of this Certification and approval letter, and is thereby responsible for complying with all the conditions. If total wetland fills for this project (now or in the future) exceed one acre, or of total impacts to streams (now or in the future) exceed 150 linear feet, compensatory mitigation may be required as described in 15A NCAC 2H .0506 (h) (6) and (7). Additional buffer impacts may require compensatory mitigation as described in 15A NCAC 2B.0242(9). For this approval to remain valid, you must adhere to the conditions listed in the attached certification and any additional conditions listed below.

Conditions of Certification:

1. Strict adherence to the most recent version of NCDOT's Best Management Practices For Bridge Demolition and Removal approved by the US Army Corps of Engineers is a condition of the 401 Water Quality Certification.

2. Bridge deck drains shall not discharge directly into the stream. Stormwater shall be directed across the bridge and pre-treated through site-appropriate means (grassed swales, pre-formed scour holes, vegetated buffers, etc.) before entering the stream. Please refer to the most current version of *Stormwater Best Management Practices.*

3. Bridge piles and bents shall be constructed using driven piles (hammer or vibratory) or drilled shaft construction methods. More specifically, jetting or other methods of pile driving are prohibited without prior written approval from NCDWQ first.

4. No drill slurry or water that has been in contact with uncured concrete shall be allowed to enter surface waters. This water shall be captured, treated, and disposed of properly.

5. A turbidity curtain will be installed in the stream if driving or drilling activities occur within the stream channel, on the stream bank, or within 5 feet of the top of bank. This condition can be waived with prior approval from DWQ.

6. The post-construction removal of any temporary bridge structures must return the project site to its preconstruction contours and elevations. The impacted areas shall be revegetated with appropriate native species.

7. All stormwater runoff shall be directed as sheetflow through stream buffers at nonerosive velocities, unless otherwise approved by this certification.

8. All riparian buffers impacted by the placement of temporary fill or clearing activities shall be restored to the preconstruction contours and revegetated. Maintained buffers shall be permanently revegetated with non-woody species by the end of the growing season following completion of construction. For the purpose of this condition, maintained buffer areas are defined as areas within the transportation corridor that will be subject to regular NCDOT maintenance activities including mowing. The area with non-maintained buffers shall be permanently revegetated with native woody species before the next growing season following completion of construction.

9. Pursuant to 15A NCAC 2B.0233(6), sediment and erosion control devices shall not be placed in Zone 1 of any Neuse Buffer without prior approval by NCDWQ. At this time, NCDWQ has approved no sediment and erosion control devices in Zone 1, outside of the approved project impacts, anywhere on this project. Moreover, sediment and erosion control devices shall be allowed in Zone 2 of the buffers provided that Zone 1 is not compromised and that discharge is released as diffuse flow.

10. If concrete is used during construction, a dry work area shall be maintained to prevent direct contact between curing concrete and stream water. Water that inadvertently contacts uncured concrete shall not be discharged to surface waters due to the potential for elevated pH and possible aquatic life and fish kills.

11. During the construction of the project, no staging of equipment of any kind is permitted in waters of the U.S., or protected riparian buffers.

12. The dimension, pattern and profile of the stream above and below the crossing shall not be modified. Disturbed floodplains and streams shall be restored to natural geomorphic conditions.

13. The use of rip-rap above the Normal High Water Mark shall be minimized. Any rip-rap placed for stream stabilization shall be placed in stream channels in such a manner that it does not impede aquatic life passage.

14. The Permittee shall ensure that the final design drawings adhere to the permit and to the permit drawings submitted for approval.

15. All work in or adjacent to stream waters shall be conducted in a dry work area. Approved BMP measures from the most current version of NCDOT Construction and Maintenance Activities manual such as sandbags, rock berms, cofferdams and other diversion structures shall be used to prevent excavation in flowing water.

16. Heavy equipment shall be operated from the banks rather than in the stream channel in order to minimize sedimentation and reduce the introduction of other pollutants into the stream.

17. All mechanized equipment operated near surface waters must be regularly inspected and maintained to prevent contamination of stream waters from fuels, lubricants, hydraulic fluids, or other toxic materials.

18. No rock, sand or other materials shall be dredged from the stream channel except where authorized by this certification.

19. Discharging hydroseed mixtures and washing out hydroseeders and other equipment in or adjacent to surface waters is prohibited.

20. The permittee and its authorized agents shall conduct its activities in a manner consistent with State water quality standards (including any requirements resulting from compliance with §303(d) of the Clean Water Act) and any other appropriate requirements of State and Federal law. If NCDWQ determines that such standards or laws are not being met (including the failure to sustain a designated or achieved use) or that State or federal law is being violated, or that further conditions are necessary to assure compliance, NCDWQ may reevaluate and modify this certification.

21. All fill slopes located in jurisdictional wetlands shall be placed at slopes no flatter than 3:1, unless otherwise authorized by this certification..

22. A copy of this Water Quality Certification shall be maintained on the construction site at all times. In addition, the Water Quality Certification and all subsequent modifications, if any, shall be maintained with the Division Engineer and the on-site project manager.

23. The outside buffer, wetland or water boundary located within the construction corridor approved by this authorization shall be clearly marked by highly visible fencing prior to any land disturbing activities. Impacts to areas within the fencing are prohibited unless otherwise authorized by this certification.

24. The issuance of this certification does not exempt the Permittee from complying with any and all statutes, rules, regulations, or ordinances that may be imposed by other government agencies (i.e. local, state, and federal) having jurisdiction, including but not limited to applicable buffer rules, stormwater management rules, soil erosion and sedimentation control requirements, etc.

25. The Permittee shall report any violations of this certification to the Division of Water Quality within 24 hours of discovery.

26. Upon completion of the project (including any impacts at associated borrow or waste sites), the NCDOT Division Engineer shall complete and return the enclosed "Certification of Completion Form" to notify NCDWQ when all work included in the 401 Certification has been completed.

27. Native riparian vegetation (i.e., trees and shrubs native to your geographic region) must be reestablished in the riparian areas within the construction limits of the project by the end of the growing season following completion of construction.

28. There shall be no excavation from, or waste disposal into, jurisdictional wetlands or waters associated with this permit without appropriate modification. Should waste or borrow sites, or access roads to waste or borrow sites, be located in wetlands or streams, compensatory mitigation will be required since that is a direct impact from road construction activities.

29. Sediment and erosion control measures shall not be placed in wetlands or waters unless otherwise approved by this Certification.

30. Erosion and sediment control practices must be in full compliance with all specifications governing the proper design, installation and operation and maintenance of such Best Management Practices in order to protect surface waters standards:

a. The erosion and sediment control measures for the project must be designed, installed, operated, and maintained in accordance with the most recent version of the *North Carolina Sediment and Erosion Control Planning and Design Manual.*
b. The design, installation, operation, and maintenance of the sediment and erosion control measures must be such that they equal, or exceed, the requirements specified in the most recent version of the *North Carolina Sediment and Erosion Control Manual.* The devices shall be maintained on all construction sites, borrow sites, and waste pile (spoil) projects, including contractor-owned or leased borrow pits associated with the project.
c. For borrow pit sites, the erosion and sediment control measures must be designed, installed, operated, and maintained in accordance with the most recent version of the *North Carolina Surface Mining Manual.*
d. The reclamation measures and implementation must comply with the reclamation in accordance with the requirements of the Sedimentation Pollution Control Act.

If you wish to contest any statement in the attached Certification you must file a petition for an administrative hearing. You may obtain the petition form from the office of Administrative hearings. You must file the petition with the office of Administrative Hearings within sixty (60) days of receipt of this notice. A petition is considered filed when it is received in the office of Administrative Hearings during normal office hours. The Office of Administrative Hearings accepts filings Monday through Friday between the hours of 8:00am and 5:00pm, except for official state holidays. The original and one (1) copy of the petition must be filed with the Office of Administrative Hearings.

The petition may be faxed-provided the original and one copy of the document is received by the Office of Administrative Hearings within five (5) business days following the faxed transmission.
The mailing address for the Office of Administrative Hearings is:

Office of Administrative Hearings
6714 Mail Service Center
Raleigh, NC 27699-6714
Telephone: (919)-431-3000, Facsimile: (919)-431-3100

A copy of the petition must also be served on DENR as follows:

Mr. Lacy Presnell, General Counsel
Department of Environment and Natural Resources
1601 Mail Service Center

This letter completes the review of the Division of Water Quality under Section 401 of the Clean Water Act. If you have any questions, please contact Rob Ridings at 919-807-6403.

Sincerely,

Thomas A. Reeder

cc: Chad Coggins, Division 4 Environmental Officer
Tom Steffens, US Army Corps of Engineers, Washington Field Office
File Copy

North Carolina Department of Environment and Natural Resources
Division of Water Quality

Pat McCrory
Governor

Thomas A. Reeder
Acting Director

John E. Skvarla, III
Secretary

NCDWQ Project No.: _____ **County:** _____

Applicant: _____

Project Name: _____

Date of Issuance of 401 Water Quality Certification: _____

Certificate of Completion
Upon completion of all work approved within the 401 Water Quality Certification or applicable Buffer Rules, and any subsequent modifications, the applicant is required to return this certificate to the 401 Transportation Permitting Unit, North Carolina Division of Water Quality, 1650 Mail Service Center, Raleigh, NC, 27699-1650. This form may be returned to NCDWQ by the applicant, the applicant's authorized agent, **or** the project engineer. It is not necessary to send certificates from all of these.

Applicant's Certification

I, _____, hereby state that, to the best of my abilities, due care and diligence was used in the observation of the construction such that the construction was observed to be built within substantial compliance and intent of the 401 Water Quality Certification and Buffer Rules, the approved plans and specifications, and other supporting materials.

Signature: _____ Date: _____

Agent's Certification

I, _____, hereby state that, to the best of my abilities, due care and diligence was used in the observation of the construction such that the construction was observed to be built within substantial compliance and intent of the 401 Water Quality Certification and Buffer Rules, the approved plans and specifications, and other supporting materials.

Signature: _____ Date:_____

Engineer's Certification

_____ Partial _____ Final

I, _____, as a duly registered Professional Engineer in the State of North Carolina, having been authorized to observe (periodically, weekly, full time) the construction of the project for the Permittee hereby state that, to the best of my abilities, due care and diligence was used in the observation of the construction such that the construction was observed to be built within substantial compliance and intent of the 401 Water Quality Certification and Buffer Rules, the approved plans and specifications, and other supporting materials.

Signature _____ Registration No. _____

Date _____

Transportation and Permitting Unit
1650 Mail Service Center, Raleigh, North Carolina 27699-1617
Location: 512 N. Salisbury St. Raleigh, North Carolina 27604
Phone: 919-807-6300 \ FAX: 919-807-6492
Internet: www.ncwaterquality.org

One NorthCarolina Naturally

An Equal Opportunity \ Affirmative Action Employer

Water Quality Certification No. 3883

GENERAL CERTIFICATION FOR PROJECTS ELIGIBLE FOR U.S. ARMY CORPS OF ENGINEERS NATIONWIDE PERMIT NUMBERS: 3 (MAINTENANCE), 4 (FISH AND WILDLIFE HARVESTING, ENHANCEMENT, AND ATTRACTION DEVICES AND ACTIVITIES), 5 (SCIENTIFIC MEASUREMENT DEVICES—25 CUBIC YARDS FOR WEIRS AND FLUMES), 6 (SURVEY ACTIVITIES—25 CUBIC YARDS FOR TEMPORARY PADS), 7 (OUTFALL STRUCTURES AND ASSOCIATED INTAKE STRUCTURES), 19 (MINOR DREDGING), 20 (OIL SPILL CLEANUP), 22 (REMOVAL OF VESSELS), 25 (STRUCTURAL DISCHARGE), 30(MOIST SOIL MANAGEMENT FOR WILDLIFE), 32 (COMPLETED ENFORCEMENT ACTIONS), 36 (BOAT RAMPS [IN NONWETLAND SITES]), AND REGIONAL PERMIT 197800056 (PIERS, DOCKS AND BOATHOUSES), AND REGIONAL PERMIT 197800125 (BOAT RAMPS) AND RIPARIAN AREA PROTECTION RULES (BUFFER RULES)

Water Quality Certification Number 3883 is issued in conformity with the requirements of Section 401, Public Laws 92-500 and 95-217 of the United States and subject to the North Carolina Division of Water Quality (DWQ) Regulations in 15 NCAC 02H .0500 and 15 NCAC 02B .0200 for the discharge of fill material to waters and wetland areas which are waters of the United States as described in 33 CFR 330 Appendix A (B) (3, 4, 5, 6, 7, 19, 20, 22, 25, 30, 32, and 36) and Regional Permits 197800056 and 19780125 and for the Riparian Area Protection Rules (Buffer Rules) in 15A NCAC 02B .0200.

The State of North Carolina certifies that the specified category of activity will not violate applicable portions of Sections 301, 302, 303, 306 and 307 of the Public Laws 92-500 and 95-217 if conducted in accordance with the conditions hereinafter set forth.

Activities meeting any one (1) of the following thresholds or circumstances require *written approval* for a 401 Water Quality Certification from the Division of Water Quality (the "Division"):

a. Impacts equal to or greater than 40 linear feet of additional permanent stream impact (including stream relocations) at an existing stream impact location; or
b. Temporary or permanent impacts equal to or greater than one-tenth (1/10) of an acre of wetlands; or
c. Any impact associated with a Notice of Violation or an enforcement action for violation(s) of DWQ Wetland Rules (15A NCAC 02H .0500), Isolated Wetland Rules (15A NCAC 02H .1300), DWQ Surface Water or Wetland Standards, or Riparian Buffer Rules (15A NCAC 02B .0200); or
d. Any impacts to streams and/or buffers in the Neuse, Tar-Pamlico, or Catawba River Basins or in the Randleman, Jordan or Goose Creek Watersheds (or any other basin or watershed with Riparian Area Protection Rules [Buffer Rules] in effect at the time of application) *unless* the activities are listed as "EXEMPT" from these rules or a Buffer Authorization Certificate is issued through N.C. Division of Coastal Management (DCM) delegation for "ALLOWABLE" activities.

In accordance with North Carolina General Statute 143-215.3D(e), written approval for a 401 Water Quality General Certification must include the appropriate fee. If a project also requires a CAMA Permit, then one payment to both agencies shall be submitted and will be the higher of the two fees.

Activities included in this General Certification that do not meet one of the thresholds listed above do not require written approval from the Division as long as they comply with the Conditions of Certification listed below. If any of these Conditions cannot be met, then written approval from the Division is required.

Water Quality Certification No. 3883

Conditions of Certification:

1. No Impacts Beyond those Authorized in the Written Approval or Beyond the Threshold of Use of this Certification

   No waste, spoil, solids, or fill of any kind shall occur in wetlands, waters, or riparian areas beyond the footprint of the impacts depicted in the Pre-Construction Notification, as authorized in the written approval from the Division or beyond the thresholds established for use of this Certification without written authorization, including incidental impacts. All construction activities, including the design, installation, operation, and maintenance of sediment and erosion control Best Management Practices shall be performed so that no violations of state water quality standards, statutes, or rules occur. Approved plans and specifications for this project are incorporated by reference and are enforceable parts of this permit.

2. Standard Erosion and Sediment Control Practices

   Erosion and sediment control practices must be in full compliance with all specifications governing the proper design, installation and operation and maintenance of such Best Management Practices and if applicable, comply with the specific conditions and requirements of the NPDES Construction Stormwater Permit issued to the site:

   a. Design, installation, operation, and maintenance of the sediment and erosion control measures must be such that they equal or exceed the requirements specified in the most recent version of the *North Carolina Sediment and Erosion Control Manual*. The devices shall be maintained on all construction sites, borrow sites, and waste pile (spoil) projects, including contractor-owned or leased borrow pits associated with the project.

   b. For borrow pit sites, the erosion and sediment control measures must be designed, installed, operated, and maintained in accordance with the most recent version of the *North Carolina Surface Mining Manual*.

   c. Reclamation measures and implementation must comply with the reclamation in accordance with the requirements of the Sedimentation Pollution Control Act and the Mining Act of 1971.

   d. Sufficient materials required for stabilization and/or repair of erosion control measures and stormwater routing and treatment shall be on site at all times.

   e. If the project occurs in waters or watersheds classified as Primary Nursery Areas (PNAs), SA, WS-I, WS-II, High Quality (HQW), or Outstanding Resource (ORW) waters, then the sedimentation and erosion control designs must comply with the requirements set forth in 15A NCAC 04B .0124, *Design Standards in Sensitive Watersheds*.

3. No Sediment and Erosion Control Measures in Wetlands or Waters

   Sediment and erosion control measures shall not be placed in wetlands or waters. Exceptions to this condition require application submittal to and written approval by the Division. If placement of sediment and erosion control devices in wetlands and waters is unavoidable, then design and placement of temporary erosion control measures shall not be conducted in a manner that may result in dis-equilibrium of wetlands, stream beds, or banks, adjacent to or upstream and downstream of the above structures. All sediment and erosion control devices shall be removed and the natural grade restored within two (2) months of the date that the Division of Land Resources (DLR) or locally delegated program has released the specific area within the project.

4. Construction Stormwater Permit NCG010000

An NPDES Construction Stormwater Permit is required for construction projects that disturb one (1) or more acres of land. This Permit allows stormwater to be discharged during land disturbing construction activities as stipulated in the conditions of the permit. If your project is covered by this permit, full compliance with permit conditions including the erosion & sedimentation control plan, inspections and maintenance, self-monitoring, record keeping and reporting requirements is required. A copy of the general permit (NCG010000), inspection log sheets, and other information may be found at http://portal.ncdenr.org/web/wq/ws/su/npdessw#tab-w .

The North Carolina Department of Transportation (NCDOT) shall be required to be in full compliance with the conditions related to construction activities within the most recent version of their individual NPDES (NCS000250) stormwater permit.

5. Work in the Dry

All work in or adjacent to stream waters shall be conducted so that the flowing stream does not come in contact with the disturbed area. Approved best management practices from the most current version of the NC Sediment and Erosion Control Manual, or the NC DOT Construction and Maintenance Activities Manual, such as sandbags, rock berms, cofferdams, and other diversion structures shall be used to minimize excavation in flowing water. Exceptions to this condition require application submittal to and written approval by the Division.

6. Construction Moratoriums and Coordination

If activities must occur during periods of high biological activity (i.e. sea turtle nesting, fish spawning, or bird nesting), then biological monitoring may be required at the request of other state or federal agencies and coordinated with these activities.

All moratoriums on construction activities established by the NC Wildlife Resources Commission (WRC), US Fish and Wildlife Service (USFWS), NC Division of Marine Fisheries (DMF), or National Marine Fisheries Service (NMFS) to lessen impacts on trout, anadromous fish, larval/post-larval fishes and crustaceans, or other aquatic species of concern shall be implemented. Exceptions to this condition require written approval by the resource agency responsible for the given moratorium.

Work within the twenty-five (25) designated trout counties or identified state or federal endangered or threatened species habitat shall be coordinated with the appropriate WRC, USFWS, NMFS, and/or DMF personnel.

7. Riparian Area Protection Rules (Buffer Rules)

Activities located in the protected riparian areas (whether jurisdictional wetlands or not), within the Neuse, Tar-Pamlico, or Catawba River Basins or in the Randleman, Jordan, or Goose Creek Watersheds (or any other basin or watershed with buffer rules) shall be limited to "uses" identified within and constructed in accordance with 15A NCAC 02B .0233, .0259, .0243, .0250, .0267 and .0605, and shall be located, designed, constructed, and maintained to have minimal disturbance to protect water quality to the maximum extent practicable through the use of best management practices. All buffer rule requirements, including diffuse flow requirements, must be met.

8. Placement of Culverts and Other Structures in Waters and Wetlands

   Culverts required for this project shall be designed and installed in such a manner that the original stream profiles are not altered and allow for aquatic life movement during low flows. Existing stream dimensions (including the cross section dimensions, pattern, and longitudinal profile) must be maintained above and below locations of each culvert.

   Placement of culverts and other structures in waters and streams must be below the elevation of the streambed by one foot for all culverts with a diameter greater than 48 inches, and 20 percent of the culvert diameter for culverts having a diameter less than or equal to 48 inches, to allow low flow passage of water and aquatic life.

   When topographic constraints indicate culvert slopes of greater than 5%, culvert burial is not required, provided that all alternative options for flattening the slope have been investigated and aquatic life movement/ connectivity has been provided when possible (rock ladders, crossvanes, etc). Notification to the Division including supporting documentation to include a location map of the culvert, culvert profile drawings, and slope calculations shall be provided to the Division 60 days prior to the installation of the culvert.

   When bedrock is present in culvert locations, culvert burial is not required provided that there is sufficient documentation of the presence of bedrock. Notification to the Division including supporting documentation such as, but not limited to, a location map of the culvert, geotechnical reports, photographs, etc shall be provided to the Division a minimum of 60 days prior to the installation of the culvert. If bedrock is discovered during construction, then the Division shall be notified by phone or email within 24 hours of discovery.

   If other site-specific topographic constraints preclude the ability to bury the culverts as described above and/or it can be demonstrated that burying the culvert would result in destabilization of the channel, then exceptions to this condition require application submittal to, and written approval by, the Division of Water Quality, regardless of the total impacts to streams or wetlands from the project.

   Installation of culverts in wetlands must ensure continuity of water movement and be designed to adequately accommodate high water or flood conditions. Additionally, when roadways, causeways, or other fill projects are constructed across FEMA-designated floodways or wetlands, openings such as culverts or bridges must be provided to maintain the natural hydrology of the system as well as prevent constriction of the floodway that may result in destabilization of streams or wetlands.

   The establishment of native, woody vegetation and other soft stream bank stabilization techniques must be used where practicable instead of riprap or other bank hardening methods.

9. If concrete is used during the construction, then all necessary measures shall be taken to prevent direct contact between uncured or curing concrete and waters of the state. Water that inadvertently contacts uncured concrete shall not be discharged to waters of the state due to the potential for elevated pH and possible aquatic life/ fish kills.

10. Applications for riprap groins proposed in accordance with 15A NCAC 07H .1401 (NC Division of Coastal Management General Permit for construction of Wooden and Riprap Groins in Estuarine and Public Trust Waters) must meet all the specific conditions for design and construction specified in 15A NCAC 07H .1405.

11. Bridge deck drains shall not discharge directly into the stream. Stormwater shall be directed across the bridge and pre-treated through site-appropriate means (grassed swales, pre-formed scour holes, vegetated buffers, etc.) before entering the stream. Please refer to the most current version of *Stormwater Best Management Practices.* Exceptions to this condition require written approval by the Division.

12. Compensatory Mitigation

    In accordance with 15A NCAC 02H .0506 (h), compensatory mitigation may be required for losses of equal to or greater than 150 linear feet of streams (intermittent and perennial) and/or equal to or greater than one (1) acre of wetlands. For linear public transportation projects, impacts equal to or exceeding 150 linear feet per stream shall require mitigation.

    Buffer mitigation may be required for any project with Buffer Rules in effect at the time of application for activities classified as "Allowable with Mitigation" or "Prohibited" within the Table of Uses.

    A determination of buffer, wetland, and stream mitigation requirements shall be made for any General Water Quality Certification for this Nationwide and/or Regional General Permit. Design and monitoring protocols shall follow the US Army Corps of Engineers Wilmington District *Stream Mitigation Guidelines* (April 2003) or its subsequent updates. Compensatory mitigation plans shall be submitted to the Division for written approval as required in those protocols. The mitigation plan must be implemented and/or constructed before any impacts occur on site. Alternatively, the Division will accept payment into an in-lieu fee program or a mitigation bank. In these cases, proof of payment shall be provided to the Division before any impacts occur on site.

13. All temporary fill and culverts shall be removed and the impacted area returned to natural conditions within 60 days of the determination that the temporary impact is no longer necessary. The impacted areas shall be restored to original grade, including each stream's original cross sectional dimensions, plan form pattern, and longitudinal bed and bed profile, and the various sites shall be stabilized with natural woody vegetation (except for the approved maintenance areas) and restored to prevent erosion.

14. All temporary pipes/ culverts/ riprap pads etc, shall be installed in all streams as outlined in the most recent edition of the *North Carolina Sediment and Erosion Control Planning and Design Manual* or the *North Carolina Surface Mining Manual* so as not to restrict stream flow or cause dis-equilibrium during use of this General Certification.

15. Any riprap required for proper culvert placement, stream stabilization, or restoration of temporarily disturbed areas shall be restricted to the area directly impacted by the approved construction activity. All rip-rap shall buried and/or "keyed in" such that the original stream elevation and streambank contours are restored and maintained. Placement of rip-rap or other approved materials shall not result in de-stabilization of the stream bed or banks upstream or downstream of the area.

16. Any rip-rap used for stream stabilization shall be of a size and density so as not to be able to be carried off by wave, current action, or stream flows and consist of clean rock or masonry material free of debris or toxic pollutants. Rip-rap shall not be installed in the streambed except in specific areas required for velocity control and to ensure structural integrity of bank stabilization measures.

17. A one-time application of fertilizer to re-establish vegetation is allowed in disturbed areas including riparian buffers, but is restricted to no closer than 10 feet from top of bank of streams. Any fertilizer application must comply with all other Federal, State and Local regulations.

18. If an environmental document is required under the National or State Environmental Policy Act (NEPA or SEPA), then this General Certification is not valid until a Finding of No Significant Impact (FONSI) or Record of Decision (ROD) is issued by the State Clearinghouse.

19. In the twenty (20) coastal counties, the appropriate DWQ Regional Office must be contacted to determine if Coastal Stormwater Regulations will be required.

20. This General Certification does not relieve the applicant of the responsibility to obtain all other required Federal, State, or Local approvals.

21. The applicant/permittee and their authorized agents shall conduct all activities in a manner consistent with State water quality standards (including any requirements resulting from compliance with §303(d) of the Clean Water Act), and any other appropriate requirements of State and Federal Law. If the Division determines that such standards or laws are not being met, including failure to sustain a designated or achieved use, or that State or Federal law is being violated, or that further conditions are necessary to assure compliance, then the Division may reevaluate and modify this General Water Quality Certification.

22. When written authorization is required for use of this certification, upon completion of all permitted impacts included within the approval and any subsequent modifications, the applicant shall be required to return the certificate of completion attached to the approval. One copy of the certificate shall be sent to the DWQ Central Office in Raleigh at 1650 Mail Service Center, Raleigh, NC, 27699-1650.

23. Additional site-specific conditions, including monitoring and/or modeling requirements, may be added to the written approval letter for projects proposed under this Water Quality Certification in order to ensure compliance with all applicable water quality and effluent standards.

24. This certification grants permission to the director, an authorized representative of the Director, or DENR staff, upon the presentation of proper credentials, to enter the property during normal business hours.

This General Certification shall expire on the same day as the expiration date of the corresponding Nationwide and/or Regional General Permit. The conditions in effect on the date of issuance of Certification for a specific project shall remain in effect for the life of the project, regardless of the expiration date of this Certification.

Non-compliance with or violation of the conditions herein set forth by a specific project may result in revocation of this General Certification for the project and may also result in criminal and/or civil penalties.

The Director of the North Carolina Division of Water Quality may require submission of a formal application for Individual Certification for any project in this category of activity if it is determined that the project is likely to have a significant adverse effect upon water quality, including state or federally listed endangered or threatened aquatic species, or degrade the waters so that existing uses of the wetland or downstream waters are precluded.

Water Quality Certification No. 3883

Public hearings may be held for specific applications or group of applications prior to a Certification decision if deemed in the public's best interest by the Director of the North Carolina Division of Water Quality.

Effective date: March 19, 2012

DIVISION OF WATER QUALITY

By

Charles Wakild, P.E.

Director

History Note: Water Quality Certification (WQC) Number 3883 issued March 19, 2012 replaces WQC Number 3687 issued November 1, 2007; WQC Number 3624 issued March 19, 2007; WQC Number 3494 issued December 31, 2004; and WQC Number 3376 issued March 18, 2002. This General Certification is rescinded when the Corps of Engineers reauthorizes any of the corresponding Nationwide and/or Regional General Permits or when deemed appropriate by the Director of the Division of Water Quality.

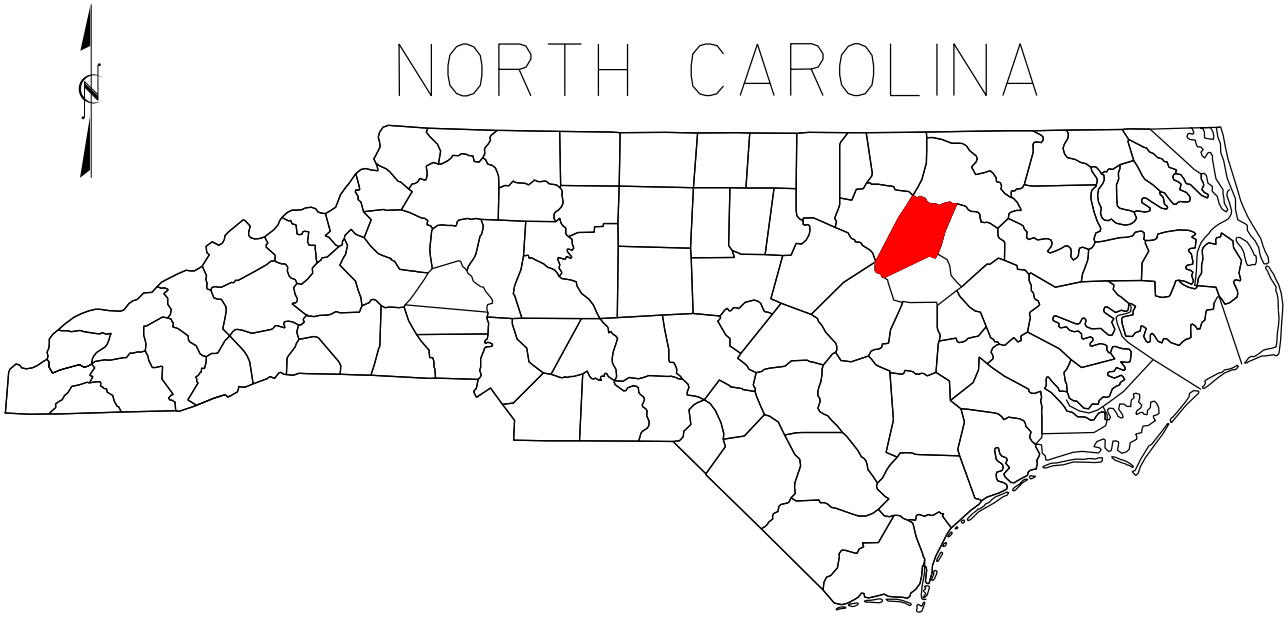

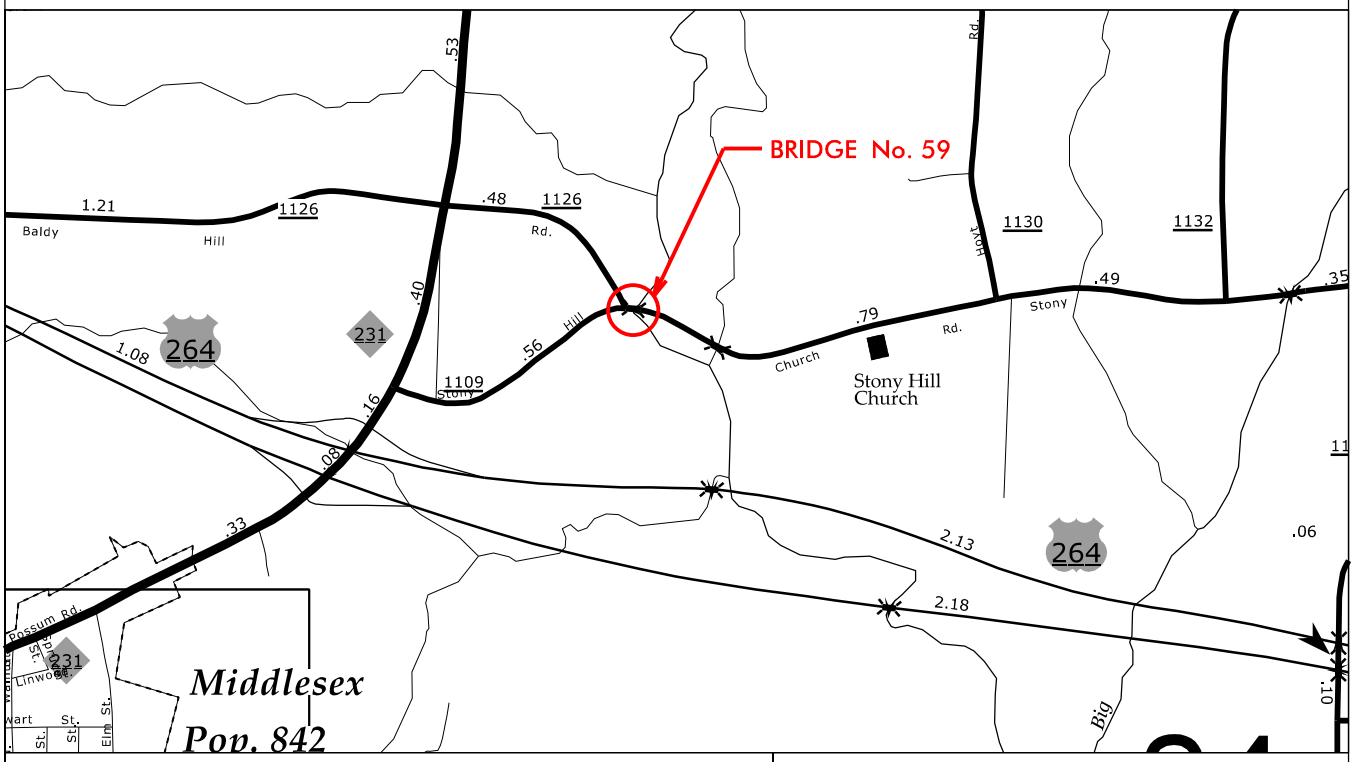

VICINITY MAPS

(NOT TO SCALE)

NCDOT

DIVISION OF HIGHWAYS

NASH COUNTY

PROJECT: 45350.1.12 (BD-5104K)

REPLACE BRIDGE #59

ON SR 1109 OVER

TURKEY CREEK

SHEET OF 6 / 11 / 2013

TOPO MAP

SCALE: 1" = 4000'

NCDOT

DIVISION OF HIGHWAYS
NASH COUNTY
PROJECT: 45350.1.12 (BD-5104K)
REPLACE BRIDGE #59
ON SR 1109 OVER
TURKEY CREEK

SHEET OF 6 / 11 / 2013

PROPERTY OWNERS

NAMES AND ADDRESSES

REFERENCE NO.	NAMES	ADDRESSES
1	CITY OF WILSON	PO BOX 10 WILSON, NC 27893

NCDOT

DIVISION OF HIGHWAYS

NASH COUNTY

PROJECT: 45350.1.12 (BD-5104K)

REPLACE BRIDGE #59

ON SR 1109 OVER

TURKEY CREEK

SHEET OF 6/11/2013

F.A. PROJECT NO. BRZ-1109(10)

STREAM AND WETLAND IMPACTS

EXISTING BRIDGE No. 59
24'-0" CLEAR ROADWAY
SPANS: 1 @ 18'-1", 1 @ 16'-10",
2 @ 17'-2", 1 @ 17'-5", 1 @ 17'-9"
REINF. CONC. FLOOR ON TIMBER JOIST
END BENTS & INT. BENT-
TIMBER CAPS ON TIMBER PILES

TBM: BM#1
RR SPIKE IN BASE OF 10" OAK
53.48' RIGHT OF -L- STA. 15+96.55
ELEV. 175.59

REMOVAL OF EXISTING PAVEMENT

EXISTING UTILITIES TO BE RELOCATED BY OTHERS.

NOTE:
0.01 ACRES OF TEMPORARY IMPACT FOR EC DEVICES

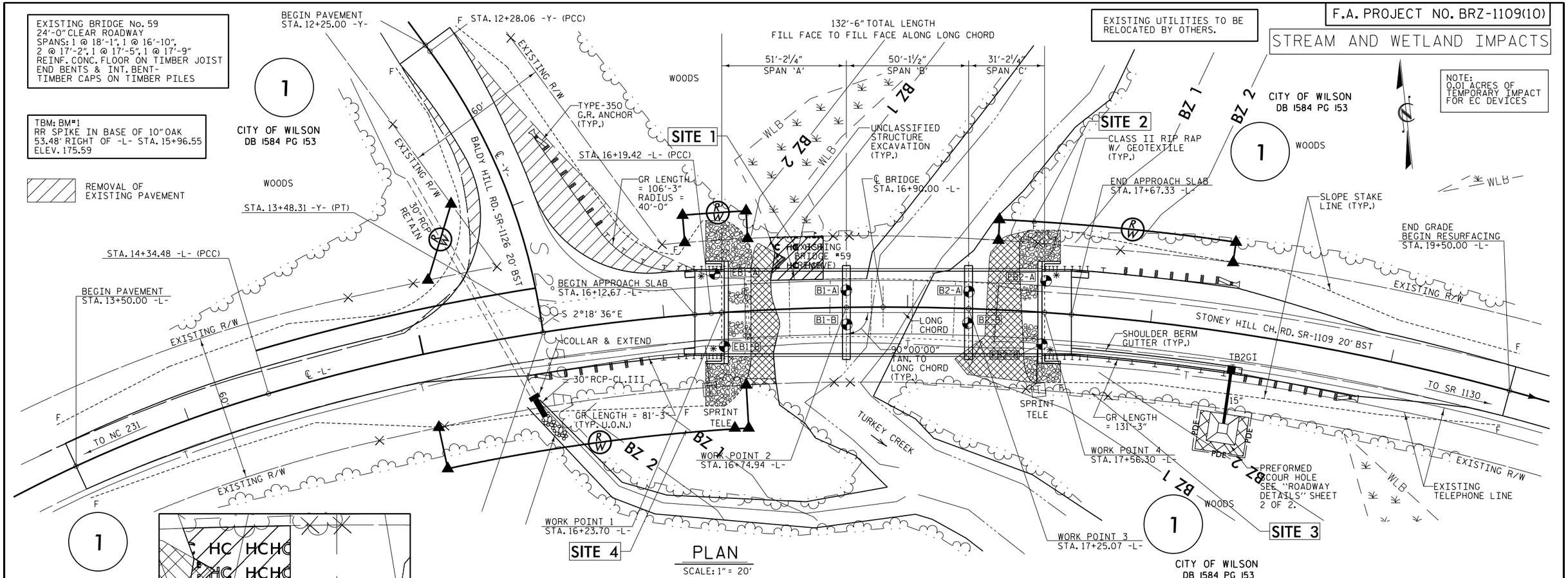

PLAN

SCALE: 1" = 20'

SITE 1

PI = 14+25.00
EL = 179.47'
VC = 110'
K = 119
D.S. = 50 mph
(-)0.0316% (+)0.8901%

PI = 15+50.00
EL = 180.59'
VC = 130'
K = 109
D.S. = 50 mph
(+)0.8901% (-)0.3000%

PI = 18+50.00
EL = 179.69'
VC = 40'
K = 99
D.S. = 50 mph
(-)0.3000% (-)0.7024%

GRADE DATA
-L- (SR 1109)

WOODS

DENOTES GEO-TECH BORE HOLE LOCATIONS.

* DENOTES TYPE III GUARDRAIL CONNECTION REQ'D. SEE "GUARDRAIL ANCHORAGE FOR VERTICAL CONCRETE BARRIER RAIL" SHEET.

NOTE: GUARDRAIL LENGTHS AS SHOWN INCLUDE ANCHOR UNITS.

U.O.N. - UNLESS OTHERWISE NOTED

FOR PAVEMENT LAYOUT, R/W LAYOUT & PDE LAYOUT SEE "ROADWAY DETAILS" SHEET 1 OF 2.

NOTES
1) TURKEY CREEK IS A BLUE LINE STREAM SHONE ON THE MIDDLESEX USGS QUAD MAP
2) NO MORATORIUM FOR NASH #59
3) METHOD III CLEARING AND GRUBBING

HC HC DENOTES HAND CLEARING
E E DENOTES EXCAVATION IN WETLAND
EXCAVATION = 1485 SF

	EXCAVATION IN WETLANDS		HAND CLEARING	
	AC	SQ FT	AC	SQ FT
SITE 1	<0.01	17	<0.01	351
TOTAL	<0.01	17	<0.01	351

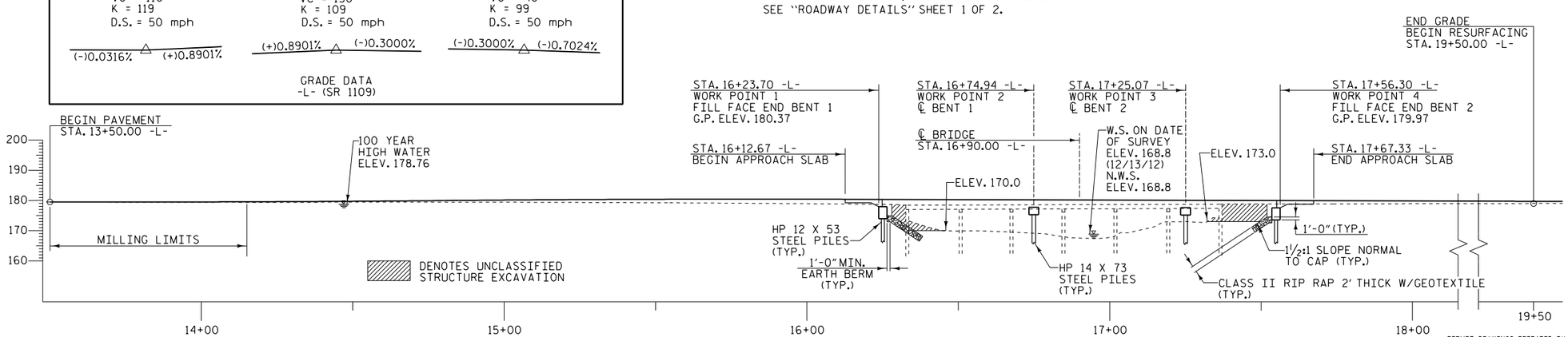

PROFILE ALONG ℄ SURVEY

SCALE: 1" = 20'

PROJECT NO. BD-5104K
NASH COUNTY
STATION: 16+90.00 -L-

REPLACES BRIDGE NO. 59

STATE OF NORTH CAROLINA
DEPARTMENT OF TRANSPORTATION
RALEIGH

33'-10" CLEAR ROADWAY - 90° SKEW

PROGRESS DRAWING
DO NOT USE FOR CONSTRUCTION

PERMIT DRAWINGS PREPARED BY:
ECOLOGICAL ENGINEERING
1151 SE Cary Parkway, Suite 101 · Cary NC 27518

REVISIONS						SHEET NO.
NO.	BY:	DATE:	NO.	BY:	DATE:	1
1			3			TOTAL SHEETS
2			4			

DRAWN BY : _____ DATE : _____
CHECKED BY : _____ DATE : _____

F.A. PROJECT NO. BRZ-1109(10)

STREAM AND WETLAND IMPACTS

EXISTING BRIDGE No. 59
24'-0" CLEAR ROADWAY
SPANS: 1 @ 18'-1", 1 @ 16'-10",
2 @ 17'-2", 1 @ 17'-5", 1 @ 17'-9"
REINF. CONC. FLOOR ON TIMBER JOIST
END BENTS & INT. BENT-
TIMBER CAPS ON TIMBER PILES

TBM: BM#1
RR SPIKE IN BASE OF 10" OAK
53.48' RIGHT OF -L- STA. 15+96.55
ELEV. 175.59

REMOVAL OF EXISTING PAVEMENT

EXISTING UTILITIES TO BE RELOCATED BY OTHERS.

NOTE:
0.01 ACRES OF TEMPORARY IMPACT FOR EC DEVICES

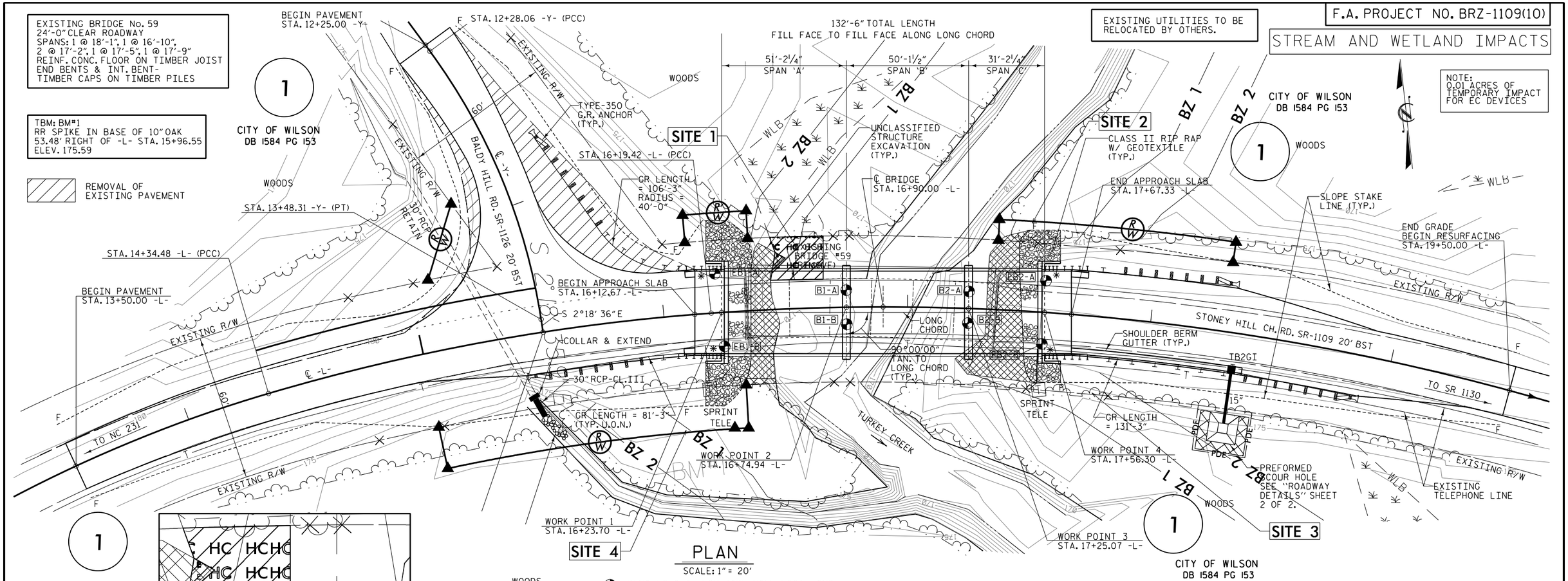

PLAN

SCALE: 1" = 20'

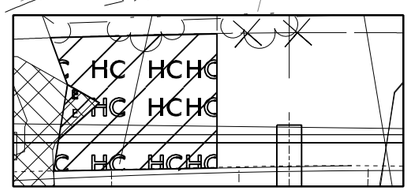

SITE 1

DENOTES GEO-TECH BORE HOLE LOCATIONS.

* DENOTES TYPE III GUARDRAIL CONNECTION REQ'D. SEE "GUARDRAIL ANCHORAGE FOR VERTICAL CONCRETE BARRIER RAIL" SHEET.

NOTE: GUARDRAIL LENGTHS AS SHOWN INCLUDE ANCHOR UNITS.

U.O.N. - UNLESS OTHERWISE NOTED

FOR PAVEMENT LAYOUT, R/W LAYOUT & PDE LAYOUT SEE "ROADWAY DETAILS" SHEET 1 OF 2.

NOTES
1) TURKEY CREEK IS A BLUE LINE STREAM SHONE ON THE MIDDLESEX USGS QUAD MAP
2) NO MORATORIUM FOR NASH #59
3) METHOD III CLEARING AND GRUBBING

HC HC DENOTES HAND CLEARING
E E DENOTES EXCAVATION IN WETLAND
EXCAVATION = 1485 SF

	EXCAVATION IN WETLANDS		HAND CLEARING	
	AC	SQ FT	AC	SQ FT
SITE 1	<0.01	17	<0.01	351
TOTAL	<0.01	17	<0.01	351

PI = 14+25.00	PI = 15+50.00	PI = 18+50.00
EL = 179.47'	EL = 180.59'	EL = 179.69'
VC = 110'	VC = 130'	VC = 40'
K = 119	K = 109	K = 99
D.S. = 50 mph	D.S. = 50 mph	D.S. = 50 mph
(-)0.0316% △ (+)0.8901%	(+)0.8901% △ (-)0.3000%	(-)0.3000% △ (-)0.7024%

GRADE DATA
-L- (SR 1109)

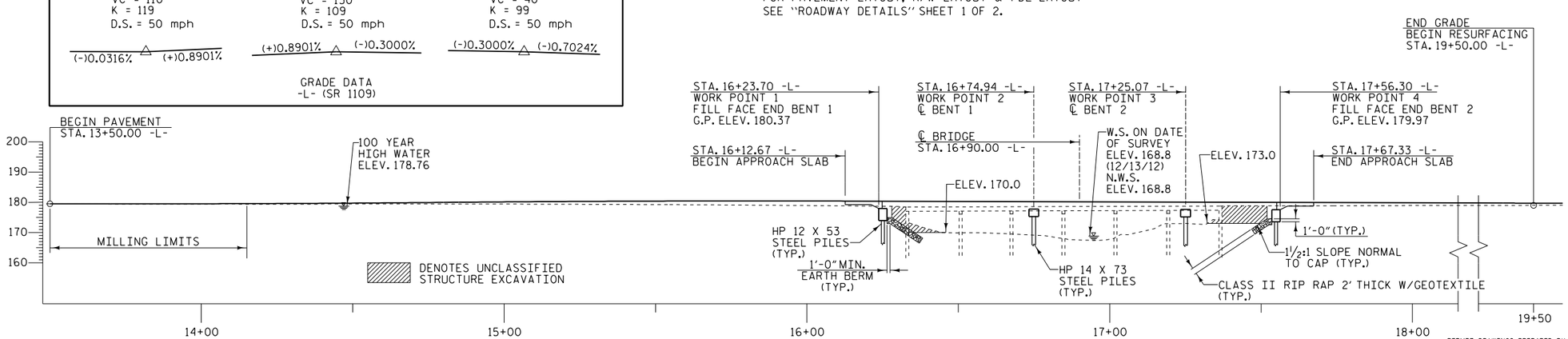

PROFILE ALONG ℄ SURVEY

SCALE: 1" = 20'

PROJECT NO. BD-5104K
NASH COUNTY
STATION: 16+90.00 -L-

REPLACES BRIDGE NO. 59

STATE OF NORTH CAROLINA
DEPARTMENT OF TRANSPORTATION
RALEIGH

33'-10" CLEAR ROADWAY - 90° SKEW

PROGRESS DRAWING
DO NOT USE FOR CONSTRUCTION

PERMIT DRAWINGS PREPARED BY:
ECOLOGICAL ENGINEERING
1151 SE Cary Parkway, Suite 101 · Cary NC 27518

REVISIONS						SHEET NO.
NO.	BY:	DATE:	NO.	BY:	DATE:	1
1			3			TOTAL SHEETS
2			4			

DRAWN BY : _____ DATE : _____
CHECKED BY : _____ DATE : _____

WETLAND PERMIT IMPACT SUMMARY

			WETLAND IMPACTS					SURFACE WATER IMPACTS				
Site No.	Station (From/To)	Structure Size / Type	Permanent Fill In Wetlands (ac)	Temp. Fill In Wetlands (ac)	Excavation in Wetlands (ac)	Mechanized Clearing in Wetlands (ac)	Hand Clearing in Wetlands (ac)	Permanent SW impacts (ac)	Temp. SW impacts (ac)	Existing Channel Impacts Permanent (ft)	Existing Channel Impacts Temp. (ft)	Natural Stream Design (ft)
1	16+44/16+66 -LT-	2@50', 1@30", 21" Cored Slab			< 0.01		< 0.01					
TOTALS:					< 0.01		< 0.01			0	0	0

NC DEPARTMENT OF TRANSPORTATION
DIVISION OF HIGHWAYS

NASH COUNTY
WBS - 45350.1.12 (BD-5104K)
Bridge #59 over Turkey Creek
SHEET 7/4/2013

ATN Revised 3/31/05

F.A. PROJECT NO. BRZ-1109(10)

BUFFER IMPACTS

EXISTING BRIDGE No. 59
24'-0" CLEAR ROADWAY
SPANS: 1 @ 18'-1", 1 @ 16'-10",
2 @ 17'-2", 1 @ 17'-5", 1 @ 17'-9"
REINF. CONC. FLOOR ON TIMBER JOIST
END BENTS & INT. BENT-
TIMBER CAPS ON TIMBER PILES

TBM: BM#1
RR SPIKE IN BASE OF 10" OAK
53.48' RIGHT OF -L- STA. 15+96.55
ELEV. 175.59

REMOVAL OF EXISTING PAVEMENT

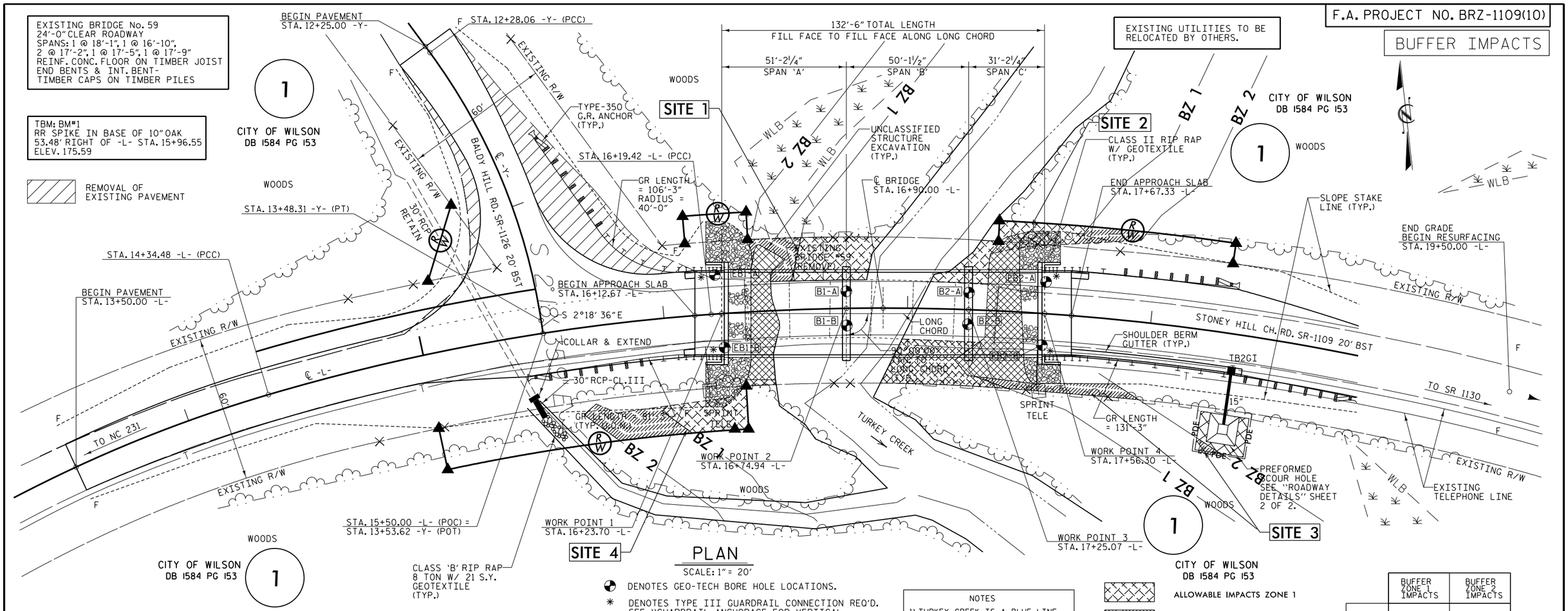

PLAN

SCALE: 1" = 20'

DENOTES GEO-TECH BORE HOLE LOCATIONS.

✳ DENOTES TYPE III GUARDRAIL CONNECTION REQ'D. SEE "GUARDRAIL ANCHORAGE FOR VERTICAL CONCRETE BARRIER RAIL" SHEET.

NOTE: GUARDRAIL LENGTHS AS SHOWN INCLUDE ANCHOR UNITS.

U.O.N. - UNLESS OTHERWISE NOTED

FOR PAVEMENT LAYOUT, R/W LAYOUT & PDE LAYOUT SEE "ROADWAY DETAILS" SHEET 1 OF 2.

NOTES

1) TURKEY CREEK IS A BLUE LINE STREAM SHONE ON THE MIDDLESEX USGS QUAD MAP
2) NO MORATORIUM FOR NASH #59
3) METHOD III CLEARING AND GRUBBING

ALLOWABLE IMPACTS ZONE 1

ALLOWABLE IMPACTS ZONE 2

EXCAVATION = 1485 SF

	BUFFER ZONE 1 IMPACTS	BUFFER ZONE 2 IMPACTS
SITE 1	555 SF	194 SF
SITE 2	568 SF	135 SF
SITE 3	588 SF	223 SF
SITE 4	405 SF	382 SF
TOTAL	2116 SF	934 SF

	PI = 14+25.00	PI = 15+50.00	PI = 18+50.00
	EL = 179.47'	EL = 180.59'	EL = 179.69'
	VC = 110'	VC = 130'	VC = 40'
	K = 119	K = 109	K = 99
	D.S. = 50 mph	D.S. = 50 mph	D.S. = 50 mph
	(-)0.0316% (+)0.8901%	(+)0.8901% (-)0.3000%	(-)0.3000% (-)0.7024%

GRADE DATA
-L- (SR 1109)

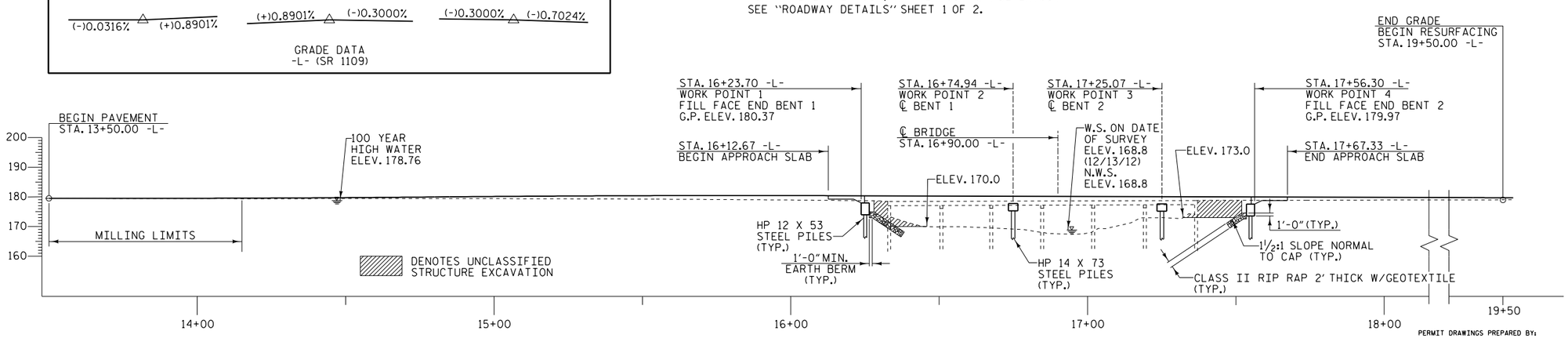

PROFILE ALONG ℄ SURVEY

SCALE: 1" = 20'

PROGRESS DRAWING
DO NOT USE FOR CONSTRUCTION

PERMIT DRAWINGS PREPARED BY:

ECOLOGICAL ENGINEERING
1151 SE Cary Parkway, Suite 101 · Cary NC 27518

PROJECT NO. BD-5104K

NASH COUNTY

STATION: 16+90.00 -L-

REPLACES BRIDGE NO. 59

STATE OF NORTH CAROLINA
DEPARTMENT OF TRANSPORTATION
RALEIGH

BRIDGE ON SR 1109
OVER TURKEY CREEK
BETWEEN SR 1126 & SR 1130

33'-10" CLEAR ROADWAY - 90° SKEW

REVISIONS						SHEET NO.
NO.	BY:	DATE:	NO.	BY:	DATE:	1
1			3			TOTAL SHEETS
2			4			

DRAWN BY : _____ DATE : _____
CHECKED BY : _____ DATE : _____

F.A. PROJECT NO. BRZ-1109(10)

BUFFER IMPACTS

EXISTING BRIDGE No. 59
24'-0" CLEAR ROADWAY
SPANS: 1 @ 18'-1", 1 @ 16'-10",
2 @ 17'-2", 1 @ 17'-5", 1 @ 17'-9"
REINF. CONC. FLOOR ON TIMBER JOIST
END BENTS & INT. BENT-
TIMBER CAPS ON TIMBER PILES

TBM: BM#1
RR SPIKE IN BASE OF 10" OAK
53.48' RIGHT OF -L- STA. 15+96.55
ELEV. 175.59

REMOVAL OF EXISTING PAVEMENT

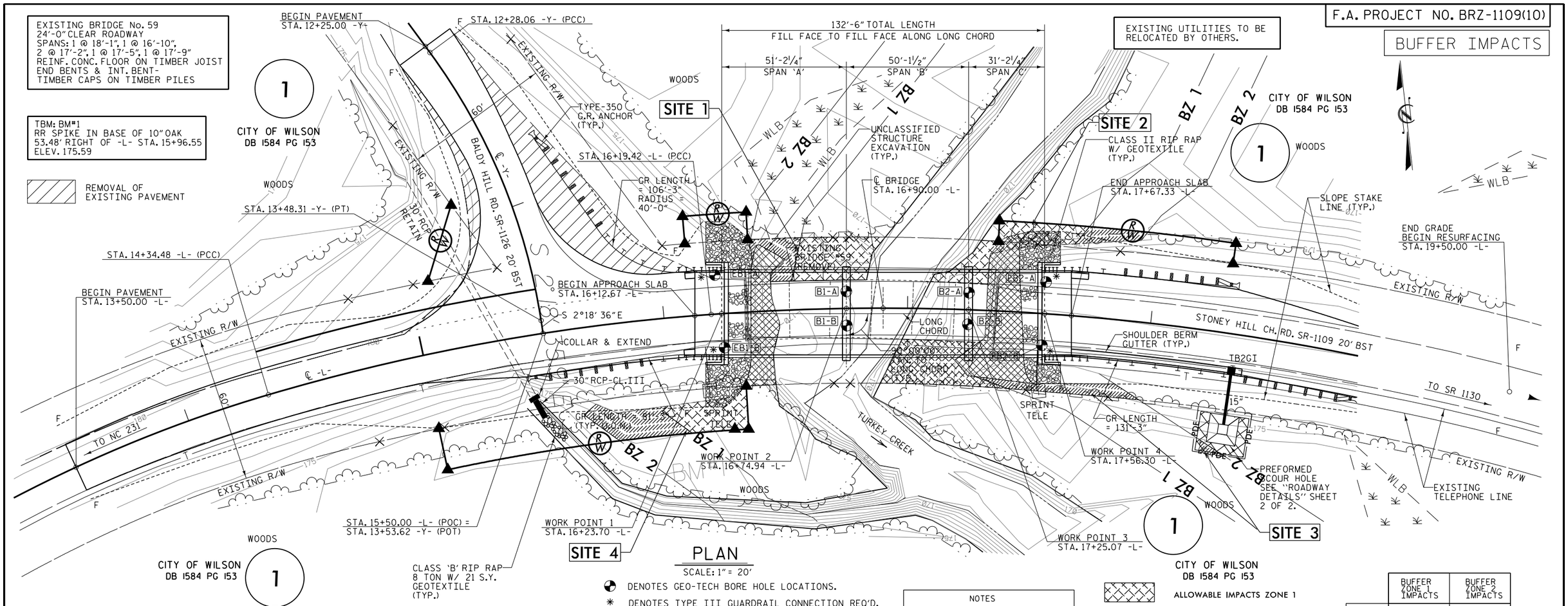

PLAN

SCALE: 1" = 20'

DENOTES GEO-TECH BORE HOLE LOCATIONS.

✱ DENOTES TYPE III GUARDRAIL CONNECTION REQ'D. SEE "GUARDRAIL ANCHORAGE FOR VERTICAL CONCRETE BARRIER RAIL" SHEET.

NOTE: GUARDRAIL LENGTHS AS SHOWN INCLUDE ANCHOR UNITS.

U.O.N. - UNLESS OTHERWISE NOTED

FOR PAVEMENT LAYOUT, R/W LAYOUT & PDE LAYOUT SEE "ROADWAY DETAILS" SHEET 1 OF 2.

NOTES

1) TURKEY CREEK IS A BLUE LINE STREAM SHONE ON THE MIDDLESEX USGS QUAD MAP
2) NO MORATORIUM FOR NASH #59
3) METHOD III CLEARING AND GRUBBING

ALLOWABLE IMPACTS ZONE 1

ALLOWABLE IMPACTS ZONE 2

EXCAVATION = 1485 SF

	BUFFER ZONE 1 IMPACTS	BUFFER ZONE 2 IMPACTS
SITE 1	555 SF	194 SF
SITE 2	568 SF	135 SF
SITE 3	588 SF	223 SF
SITE 4	405 SF	382 SF
TOTAL	2116 SF	934 SF

PI = 14+25.00	PI = 15+50.00	PI = 18+50.00
EL = 179.47'	EL = 180.59'	EL = 179.69'
VC = 110'	VC = 130'	VC = 40'
K = 119	K = 109	K = 99
D.S. = 50 mph	D.S. = 50 mph	D.S. = 50 mph
(-)0.0316% (+)0.8901%	(+)0.8901% (-)0.3000%	(-)0.3000% (-)0.7024%

GRADE DATA
-L- (SR 1109)

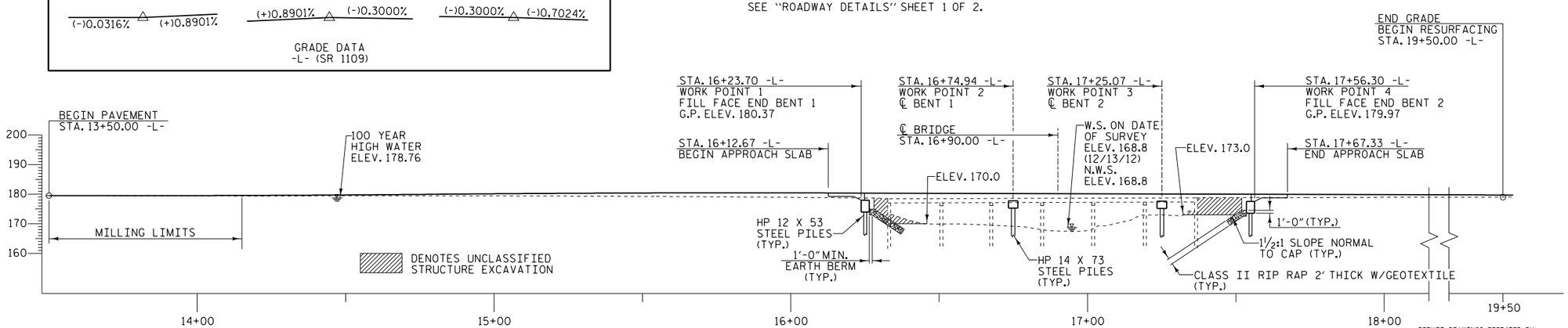

PROFILE ALONG ℄ SURVEY

SCALE: 1" = 20'

PROJECT NO. BD-5104K

NASH COUNTY

STATION: 16+90.00 -L-

REPLACES BRIDGE NO. 59

STATE OF NORTH CAROLINA
DEPARTMENT OF TRANSPORTATION
RALEIGH

BRIDGE ON SR 1109
OVER TURKEY CREEK
BETWEEN SR 1126 & SR 1130

33'-10" CLEAR ROADWAY - 90° SKEW

PROGRESS DRAWING
DO NOT USE FOR CONSTRUCTION

PERMIT DRAWINGS PREPARED BY:
ECOLOGICAL ENGINEERING
1151 SE Cary Parkway, Suite 101 · Cary NC 27518

REVISIONS						SHEET NO.
NO.	BY:	DATE:	NO.	BY:	DATE:	1
1			3			TOTAL SHEETS
2			4			

DRAWN BY : _____ DATE : _____
CHECKED BY : _____ DATE : _____

BUFFER IMPACTS SUMMARY

			IMPACT									BUFFER REPLACEMENT	
			TYPE			ALLOWABLE			MITIGABLE				
SITE NO.	STRUCTURE SIZE / TYPE	STATION (FROM/TO)	ROAD CROSSING	BRIDGE	PARALLEL IMPACT	ZONE 1 (ft^2)	ZONE 2 (ft^2)	TOTAL (ft^2)	ZONE 1 (ft^2)	ZONE 2 (ft^2)	TOTAL (ft^2)	ZONE 1 (ft^2)	ZONE 2 (ft^2)
1	2@50', 1@30", 21" Cored Slab	16+37/16+90 -LT-		X		555.0	194.0						
2	2@50', 1@30", 21" Cored Slab	17+09/17+95 -LT-		X		568.0	135.0						
3	2@50', 1@30", 21" Cored Slab	16+89/17+99 -RT-		X		588.0	223.0						
4	2@50', 1@30", 21" Cored Slab	15+62/16+32 -RT-		X		405.0	382.0						
TOTAL:						2116.0	934.0	0.0	0.0	0.0	0.0		

N.C. DEPT. OF TRANSPORTATION
DIVISION OF HIGHWAYS

NASH COUNTY
PROJECT: 45350.1.12 (BD-5104K)
Bridge #59 over Turkey Creek

6/11/2013
SHEET OF

Rev. May 2006

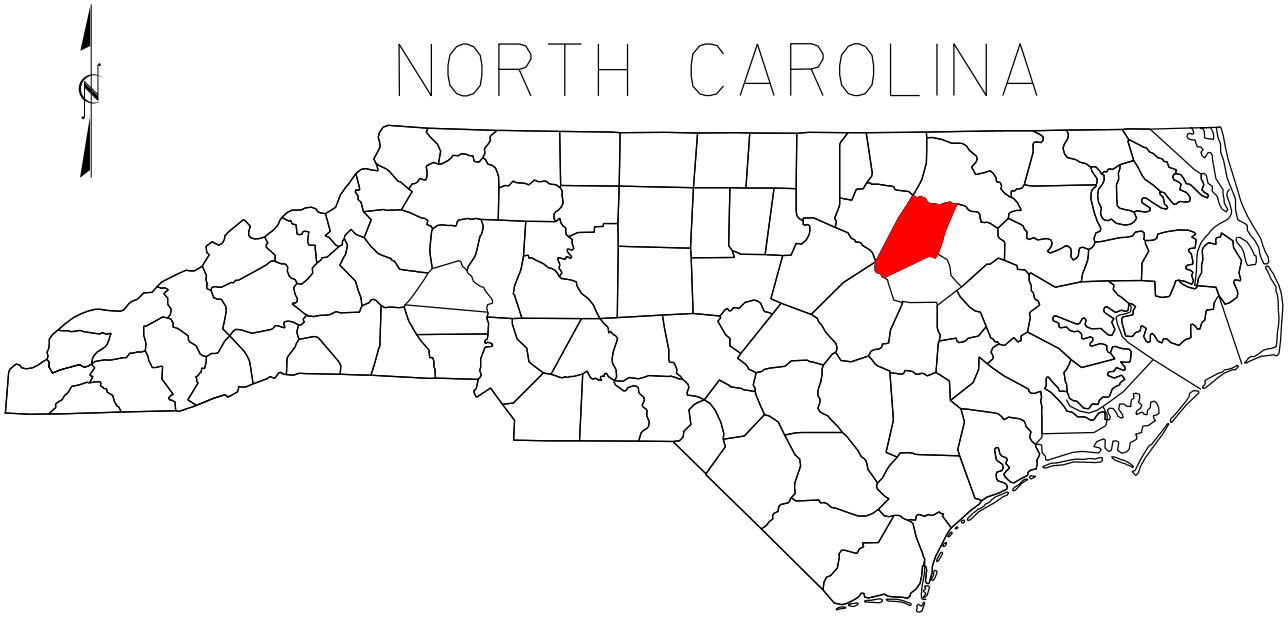

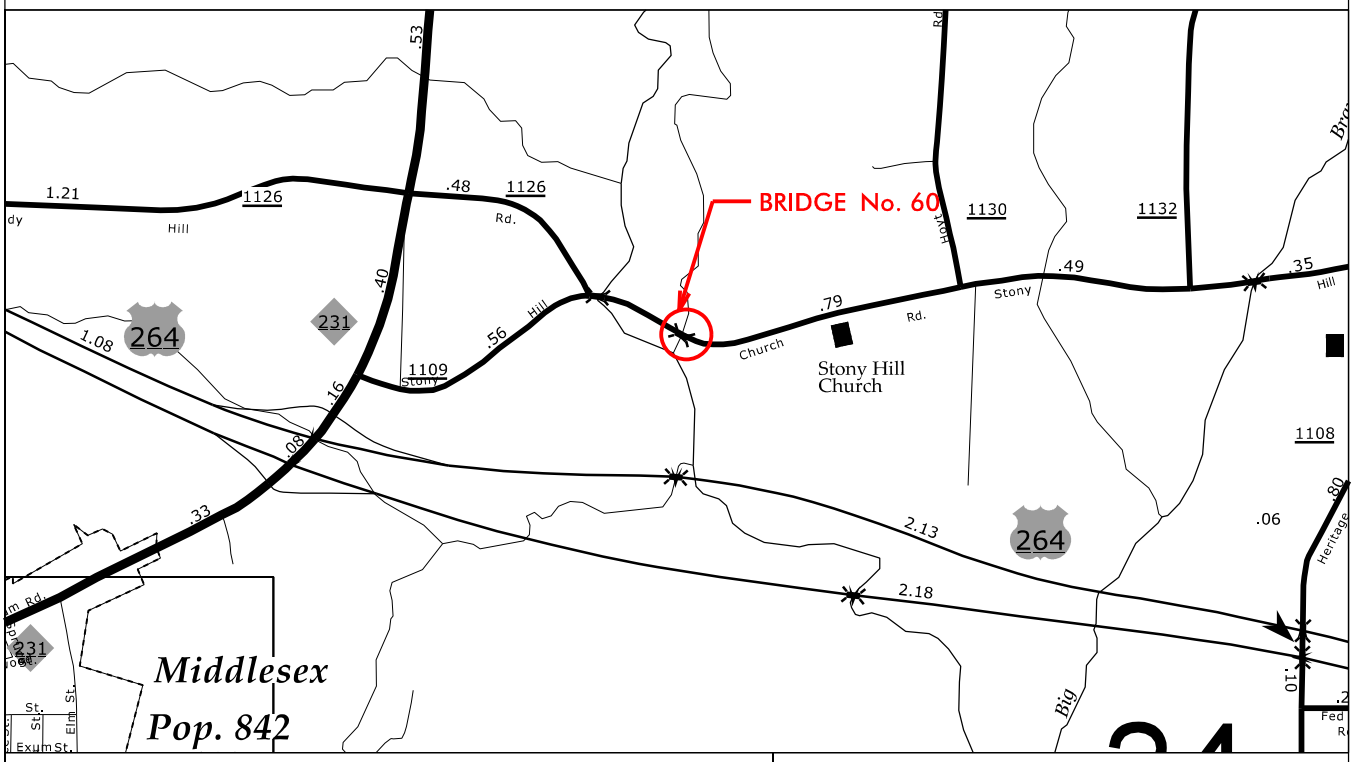

VICINITY MAPS

(NOT TO SCALE)

NCDOT

DIVISION OF HIGHWAYS

NASH COUNTY

PROJECT: 45350.1.13 (BD-5104L)

REPLACE BRIDGE #60

ON SR 1109 OVER

TURKEY CREEK OVERFLOW

SHEET OF 6 / 11 / 2013

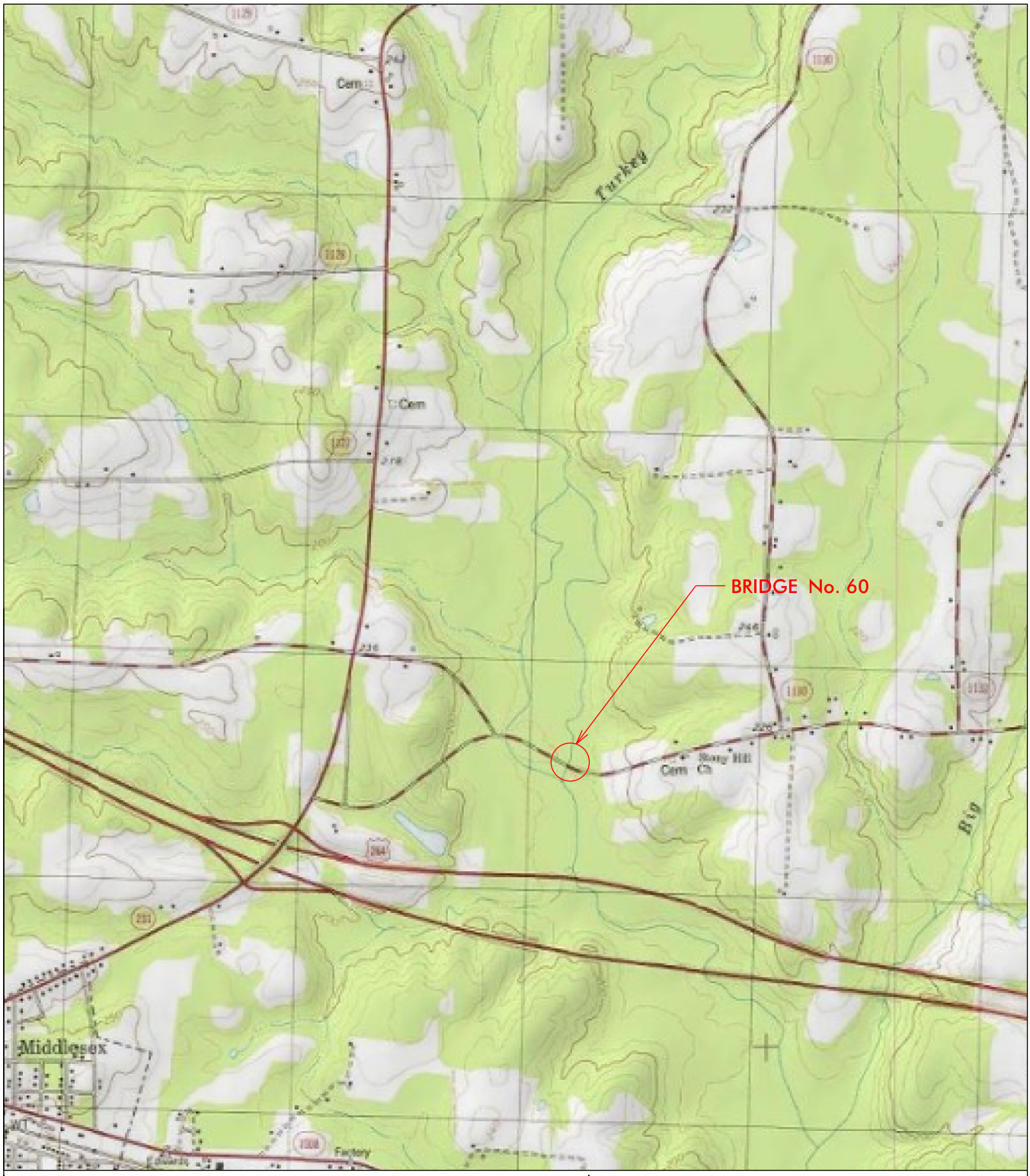

TOPO MAP

SCALE: 1" = 4000'

NCDOT

DIVISION OF HIGHWAYS
NASH COUNTY
PROJECT: 45350.1.13 (BD-5104L)
REPLACE BRIDGE #60
ON SR 1109 OVER
TURKEY CREEK OVERFLOW

SHEET OF 6 / 11 / 2013

PROPERTY OWNERS

NAMES AND ADDRESSES

REFERENCE NO.	NAMES	ADDRESSES
1	CITY OF WILSON	PO BOX 10 WILSON, NC 27893
2	NASH COUNTY	9842 STONEY HILL CHURCH RD NASHVILLE NC, 27856

NCDOT

DIVISION OF HIGHWAYS

NASH COUNTY

PROJECT: 45350.1.13 (BD-5104L)

REPLACE BRIDGE #60

ON SR 1109 OVER

TURKEY CREEK OVERFLOW

SHEET OF 6/11/2013

F.A. PROJECT NO. BRZ-1109 (11)

STREAM & WETLAND IMPACTS

EXISTING BRIDGE No. 60
24'-0" CLEAR ROADWAY
SPANS: 1 @ 18'-0"; 1 @ 17'-0",
1 @ 16'-9"; 1 @ 18'-0"
REINF. CONC. FLOOR ON TIMBER JOISTS
END BENTS & INT. BENTS-
TIMBER CAPS ON TIMBER PILES

TBM: BM#2
RR SPIKE IN BASE OF 18" OAK
48.64' RIGHT OF -L- STA. 26+10.17
ELEV. 175.45

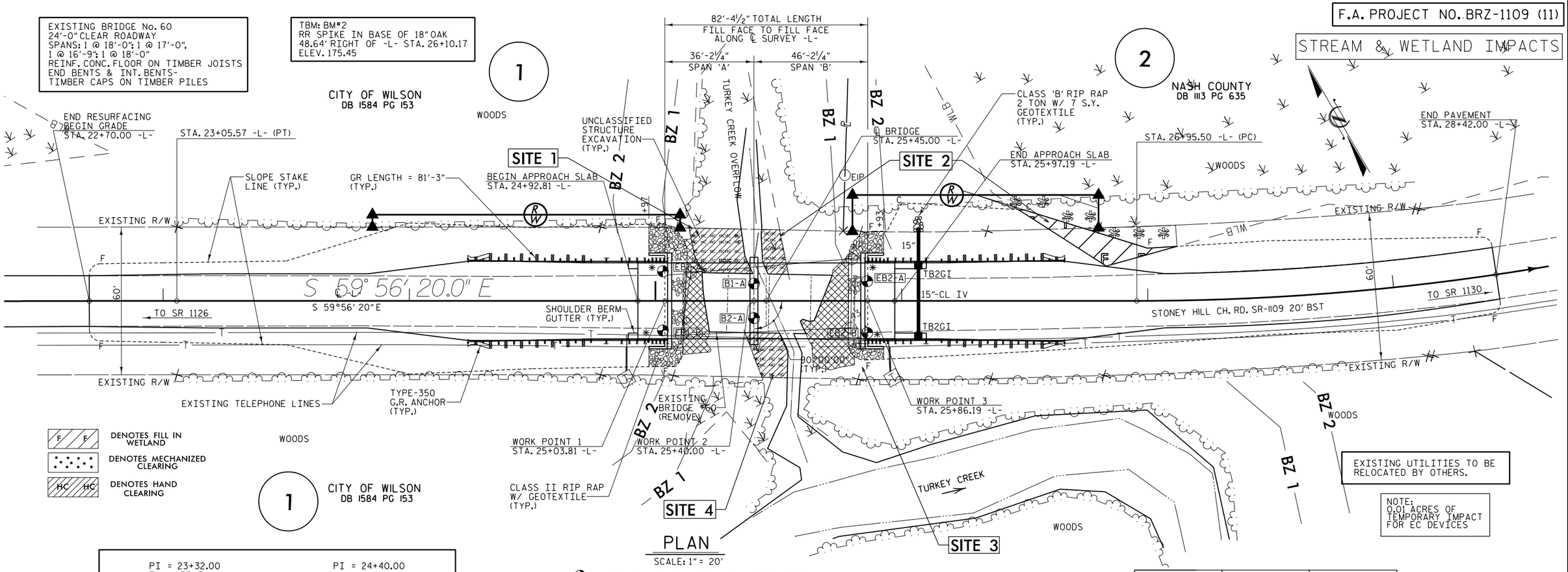

EXISTING UTILITIES TO BE RELOCATED BY OTHERS.

NOTE:
0.01 ACRES OF TEMPORARY IMPACT FOR EC DEVICES

PLAN

SCALE: 1" = 20'

PI = 23+32.00	PI = 24+40.00
EL = 177.13'	EL = 177.92'
VC = 90'	VC = 90'
K = 99	K = 87
D.S. = 50 mph	D.S. = 50 mph
(-)0.1690% △ (+)0.7387%	(+)0.7387% △ (-)0.3000%

GRADE DATA
-L- (SR 1109)

DENOTES GEO-TECH BORE HOLE LOCATIONS.

DENOTES TYPE III GUARDRAIL CONNECTION REQ'D. SEE "GUARDRAIL ANCHORAGE FOR VERTICAL CONCRETE BARRIER RAIL" SHEET.

NOTE: GUARDRAIL LENGTHS AS SHOWN INCLUDE ANCHOR UNITS.

FOR PAVEMENT LAYOUT & R/W LAYOUT SEE "ROADWAY DETAILS" SHEET.

NOTES
1) TURKEY CREEK IS A BLUE LINE STREAM SHONE ON THE MIDDLESEX USGS QUAD MAP
2) NO MORATORIUM FOR NASH #60
3) METHOD III CLEARING AND GRUBBING

	PERMANENT FILL IN WETLANDS		MECHANIZED CLEARING		HAND CLEARING	
	AC	SQ FT	AC	SQ FT	AC	SQ FT
SITE 1	-	-	-	-	<0.01	372
SITE 2	<0.01	375	0.01	558	<0.01	156
SITE 4	-	-	-	-	<0.01	239
TOTAL	<0.01	375	0.01	558	0.01	767

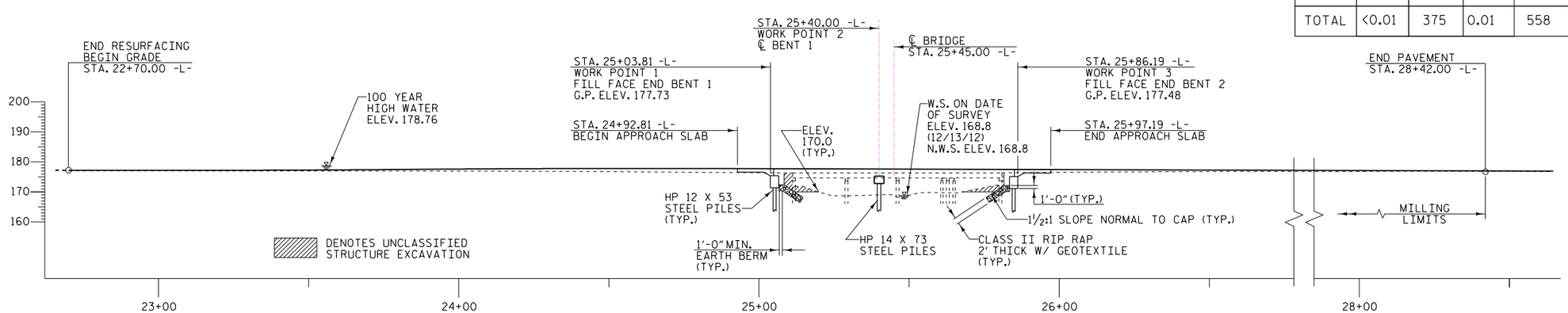

PROFILE ALONG ℄ SURVEY

SCALE: 1" = 20'

PROJECT NO. BD-5104L

NASH COUNTY

STATION: 25+45.00 -L-

REPLACES BRIDGE NO. 60

STATE OF NORTH CAROLINA
DEPARTMENT OF TRANSPORTATION
RALEIGH

BRIDGE ON SR 1109
OVER TURKEY CREEK OVERFLOW
BETWEEN SR 1126 & SR 1130

30'-10" CLEAR ROADWAY - 90° SKEW

PROGRESS DRAWING
DO NOT USE FOR CONSTRUCTION

PERMIT DRAWINGS PREPARED BY:

ECOLOGICAL ENGINEERING
1151 SE Cary Parkway, Suite 101 • Cary NC 27518

REVISIONS						SHEET NO.
NO.	BY:	DATE:	NO.	BY:	DATE:	1
1			3			TOTAL SHEETS
2			4			

F.A. PROJECT NO. BRZ-1109 (11)

STREAM & WETLAND IMPACTS

EXISTING BRIDGE No. 60
24'-0" CLEAR ROADWAY
SPANS: 1 @ 18'-0"; 1 @ 17'-0",
1 @ 16'-9"; 1 @ 18'-0"
REINF. CONC. FLOOR ON TIMBER JOISTS
END BENTS & INT. BENTS-
TIMBER CAPS ON TIMBER PILES

TBM: BM#2
RR SPIKE IN BASE OF 18" OAK
48.64' RIGHT OF -L- STA. 26+10.17
ELEV. 175.45

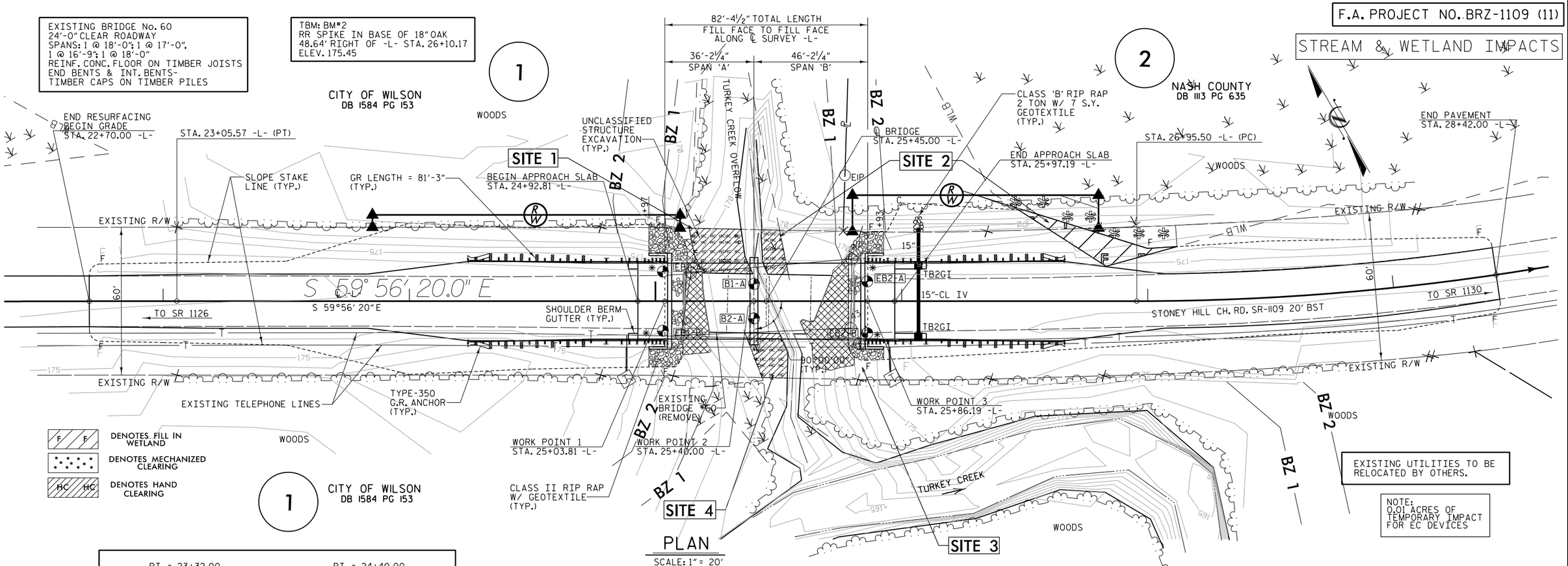

EXISTING UTILITIES TO BE RELOCATED BY OTHERS.

NOTE:
0.01 ACRES OF TEMPORARY IMPACT FOR EC DEVICES

PLAN

SCALE: 1" = 20'

PI = 23+32.00	PI = 24+40.00
EL = 177.13'	EL = 177.92'
VC = 90'	VC = 90'
K = 99	K = 87
D.S. = 50 mph	D.S. = 50 mph
(-)0.1690% △ (+)0.7387%	(+)0.7387% △ (-)0.3000%

GRADE DATA
-L- (SR 1109)

DENOTES GEO-TECH BORE HOLE LOCATIONS.

✳ DENOTES TYPE III GUARDRAIL CONNECTION REQ'D. SEE "GUARDRAIL ANCHORAGE FOR VERTICAL CONCRETE BARRIER RAIL" SHEET.

NOTE: GUARDRAIL LENGTHS AS SHOWN INCLUDE ANCHOR UNITS.

FOR PAVEMENT LAYOUT & R/W LAYOUT SEE "ROADWAY DETAILS" SHEET.

NOTES
1) TURKEY CREEK IS A BLUE LINE STREAM SHONE ON THE MIDDLESEX USGS QUAD MAP
2) NO MORATORIUM FOR NASH #60
3) METHOD III CLEARING AND GRUBBING

	PERMANENT FILL IN WETLANDS		MECHANIZED CLEARING		HAND CLEARING	
	AC	SQ FT	AC	SQ FT	AC	SQ FT
SITE 1	-	-	-	-	<0.01	372
SITE 2	<0.01	375	0.01	558	<0.01	156
SITE 4	-	-	-	-	<0.01	239
TOTAL	<0.01	375	0.01	558	0.01	767

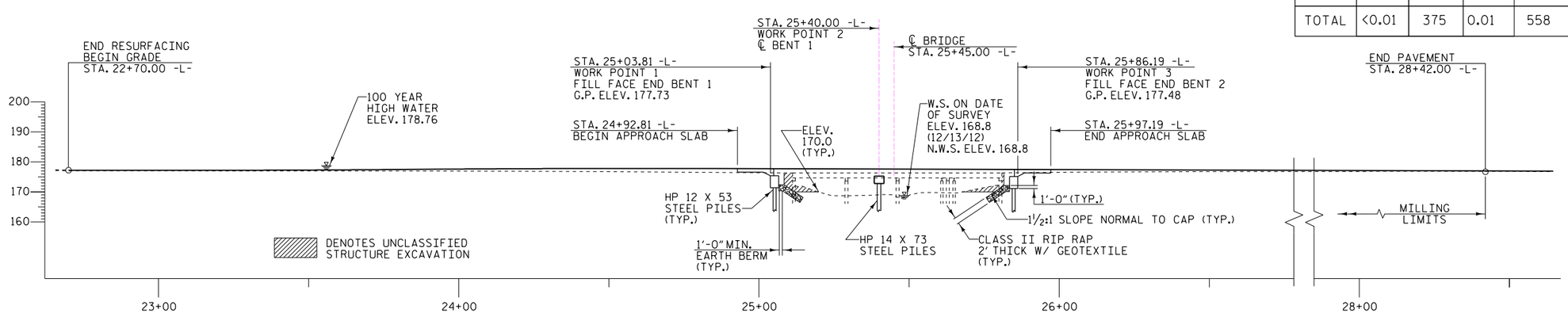

PROFILE ALONG ℄ SURVEY

SCALE: 1" = 20'

PROGRESS DRAWING
DO NOT USE FOR CONSTRUCTION

PERMIT DRAWINGS PREPARED BY:

ECOLOGICAL ENGINEERING
1151 SE Cary Parkway, Suite 101 • Cary NC 27518

PROJECT NO. BD-5104L
NASH COUNTY
STATION: 25+45.00 -L-

REPLACES BRIDGE NO. 60

STATE OF NORTH CAROLINA
DEPARTMENT OF TRANSPORTATION
RALEIGH

BRIDGE ON SR 1109
OVER TURKEY CREEK OVERFLOW
BETWEEN SR 1126 & SR 1130

30'-10" CLEAR ROADWAY - 90° SKEW

REVISIONS						SHEET NO.
NO.	BY:	DATE:	NO.	BY:	DATE:	1
1			3			TOTAL SHEETS
2			4			

WETLAND PERMIT IMPACT SUMMARY

			WETLAND IMPACTS					SURFACE WATER IMPACTS				
Site No.	Station (From/To)	Structure Size / Type	Permanent Fill In Wetlands (ac)	Temp. Fill In Wetlands (ac)	Excavation in Wetlands (ac)	Mechanized Clearing in Wetlands (ac)	Hand Clearing in Wetlands (ac)	Permanent SW impacts (ac)	Temp. SW impacts (ac)	Existing Channel Impacts Permanent (ft)	Existing Channel Impacts Temp. (ft)	Natural Stream Design (ft)
1	25+14/25+38 -LT-	1@35', 1@45", 21" Cored Slab					< 0.01					
2	25+43/27+12 -LT-	1@35', 1@45", 21" Cored Slab	< 0.01			0.01	< 0.01					
4	25+36/25+54 -LT-	1@35', 1@45", 21" Cored Slab					< 0.01					
TOTALS:			< 0.01			0.01	0.01			0	0	0

NC DEPARTMENT OF TRANSPORTATION
DIVISION OF HIGHWAYS

NASH COUNTY
WBS - 45350.1.13 (BD-5104L)
Bridge #60 over Turkey Creek overflow
SHEET 7/2/2013

ATN Revised 3/31/05

F.A. PROJECT NO. BRZ-1109 (11)

BUFFER IMPACTS

EXISTING BRIDGE No. 60
24'-0" CLEAR ROADWAY
SPANS: 1 @ 18'-0"; 1 @ 17'-0",
1 @ 16'-9"; 1 @ 18'-0"
REINF. CONC. FLOOR ON TIMBER JOISTS
END BENTS & INT. BENTS-
TIMBER CAPS ON TIMBER PILES

TBM: BM#2
RR SPIKE IN BASE OF 18" OAK
48.64' RIGHT OF -L- STA. 26+10.17
ELEV. 175.45

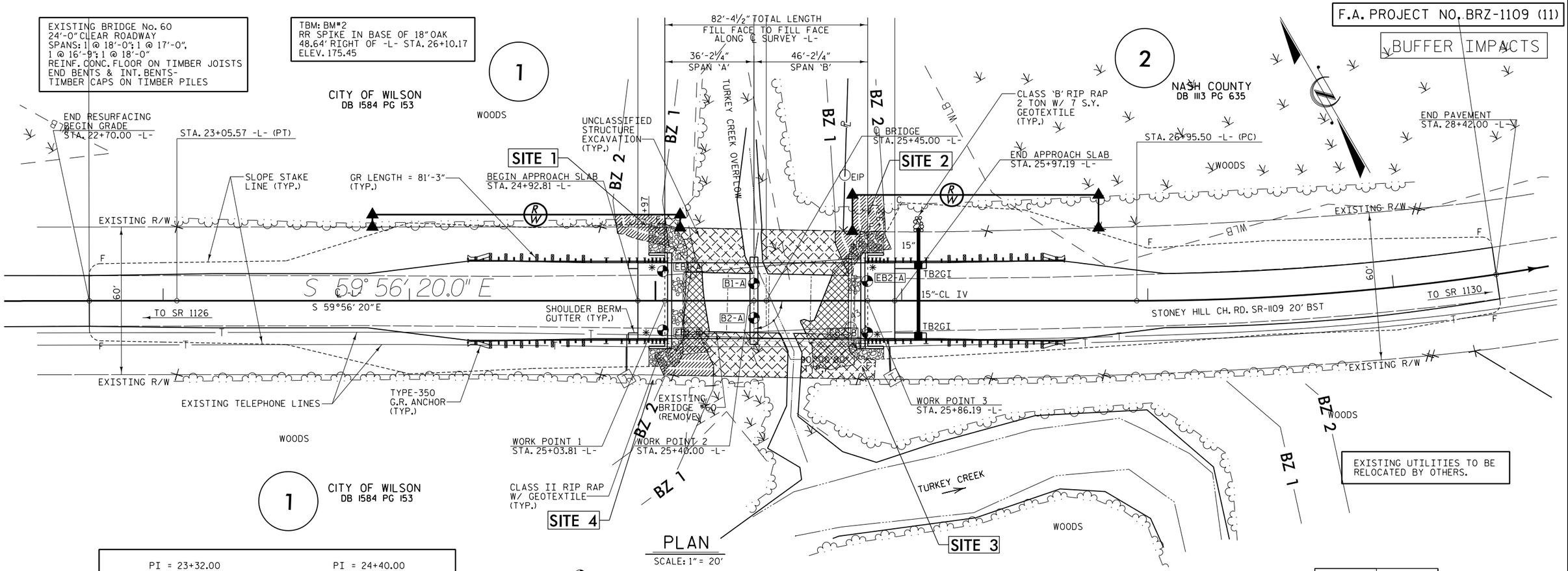

PLAN

SCALE: 1" = 20'

PI = 23+32.00	PI = 24+40.00
EL = 177.13'	EL = 177.92'
VC = 90'	VC = 90'
K = 99	K = 87
D.S. = 50 mph	D.S. = 50 mph
(-)0.1690% △ (+)0.7387%	(+)0.7387% △ (-)0.3000%

GRADE DATA
-L- (SR 1109)

DENOTES GEO-TECH BORE HOLE LOCATIONS.

✳ DENOTES TYPE III GUARDRAIL CONNECTION REQ'D. SEE "GUARDRAIL ANCHORAGE FOR VERTICAL CONCRETE BARRIER RAIL" SHEET.

NOTE: GUARDRAIL LENGTHS AS SHOWN INCLUDE ANCHOR UNITS.

FOR PAVEMENT LAYOUT & R/W LAYOUT SEE "ROADWAY DETAILS" SHEET.

NOTES
1) TURKEY CREEK IS A BLUE LINE STREAM SHONE ON THE MIDDLESEX USGS QUAD MAP
2) NO MORATORIUM FOR NASH #60
3) METHOD III CLEARING AND GRUBBING

ALLOWABLE IMPACTS ZONE 1

ALLOWABLE IMPACTS ZONE 2

EXCAVATION = 880 SF

	ALLOWABLE ZONE 1 IMPACTS	ALLOWABLE ZONE 2 IMPACTS
SITE 1	424 SF	208 SF
SITE 2	567 SF	406 SF
SITE 3	475 SF	0 SF
SITE 4	574 SF	286 SF
TOTAL	2040 SF	900 SF

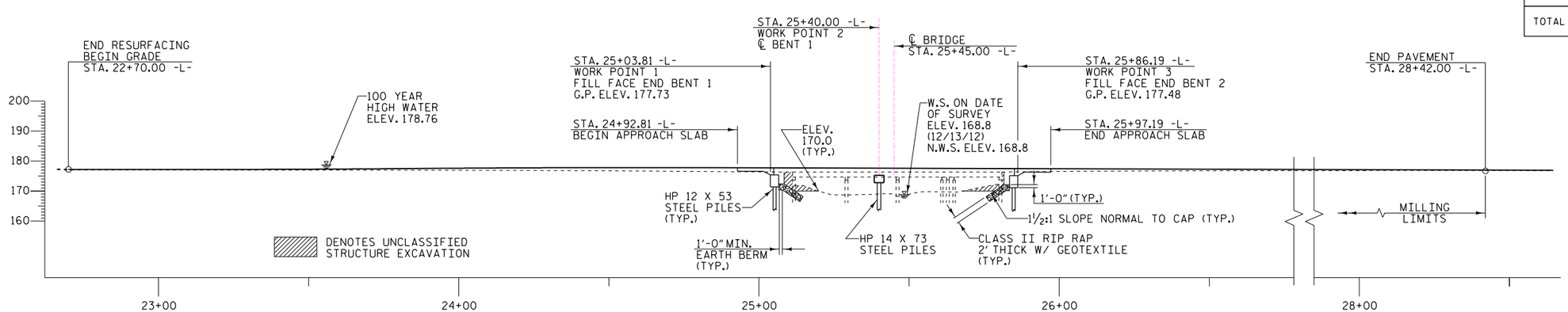

PROFILE ALONG ℄ SURVEY

SCALE: 1" = 20'

PROJECT NO. BD-5104L

NASH COUNTY

STATION: 25+45.00 -L-

REPLACES BRIDGE NO. 60

STATE OF NORTH CAROLINA
DEPARTMENT OF TRANSPORTATION
RALEIGH

BRIDGE ON SR 1109
OVER TURKEY CREEK OVERFLOW
BETWEEN SR 1126 & SR 1130

30'-10" CLEAR ROADWAY - 90° SKEW

PROGRESS DRAWING
DO NOT USE FOR CONSTRUCTION

PERMIT DRAWINGS PREPARED BY:

ECOLOGICAL ENGINEERING
1151 SE Cary Parkway, Suite 101 • Cary NC 27518

REVISIONS						SHEET NO.
NO.	BY:	DATE:	NO.	BY:	DATE:	1
1			3			TOTAL SHEETS
2			4			

F.A. PROJECT NO. BRZ-1109 (11)

BUFFER IMPACTS

EXISTING BRIDGE No. 60
24'-0" CLEAR ROADWAY
SPANS: 1 @ 18'-0"; 1 @ 17'-0",
1 @ 16'-9"; 1 @ 18'-0"
REINF. CONC. FLOOR ON TIMBER JOISTS
END BENTS & INT. BENTS-
TIMBER CAPS ON TIMBER PILES

TBM: BM#2
RR SPIKE IN BASE OF 18" OAK
48.64' RIGHT OF -L- STA. 26+10.17
ELEV. 175.45

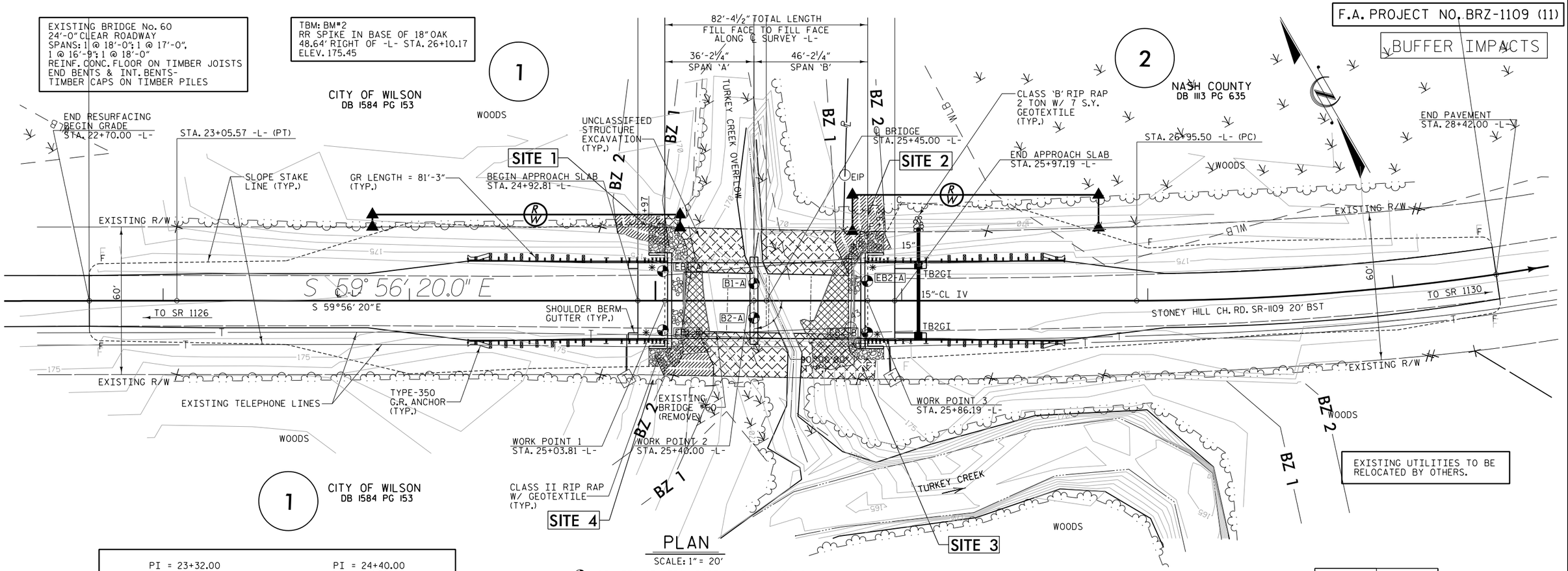

PLAN

SCALE: 1" = 20'

PI = 23+32.00	PI = 24+40.00
EL = 177.13'	EL = 177.92'
VC = 90'	VC = 90'
K = 99	K = 87
D.S. = 50 mph	D.S. = 50 mph
(-)0.1690% △ (+)0.7387%	(+)0.7387% △ (-)0.3000%

GRADE DATA
-L- (SR 1109)

◐ DENOTES GEO-TECH BORE HOLE LOCATIONS.

✳ DENOTES TYPE III GUARDRAIL CONNECTION REQ'D. SEE "GUARDRAIL ANCHORAGE FOR VERTICAL CONCRETE BARRIER RAIL" SHEET.

NOTE: GUARDRAIL LENGTHS AS SHOWN INCLUDE ANCHOR UNITS.

FOR PAVEMENT LAYOUT & R/W LAYOUT SEE "ROADWAY DETAILS" SHEET.

NOTES
1) TURKEY CREEK IS A BLUE LINE STREAM SHONE ON THE MIDDLESEX USGS QUAD MAP
2) NO MORATORIUM FOR NASH #60
3) METHOD III CLEARING AND GRUBBING

ALLOWABLE IMPACTS ZONE 1

ALLOWABLE IMPACTS ZONE 2

EXCAVATION = 880 SF

	ALLOWABLE ZONE 1 IMPACTS	ALLOWABLE ZONE 2 IMPACTS
SITE 1	424 SF	208 SF
SITE 2	567 SF	406 SF
SITE 3	475 SF	0 SF
SITE 4	574 SF	286 SF
TOTAL	2040 SF	900 SF

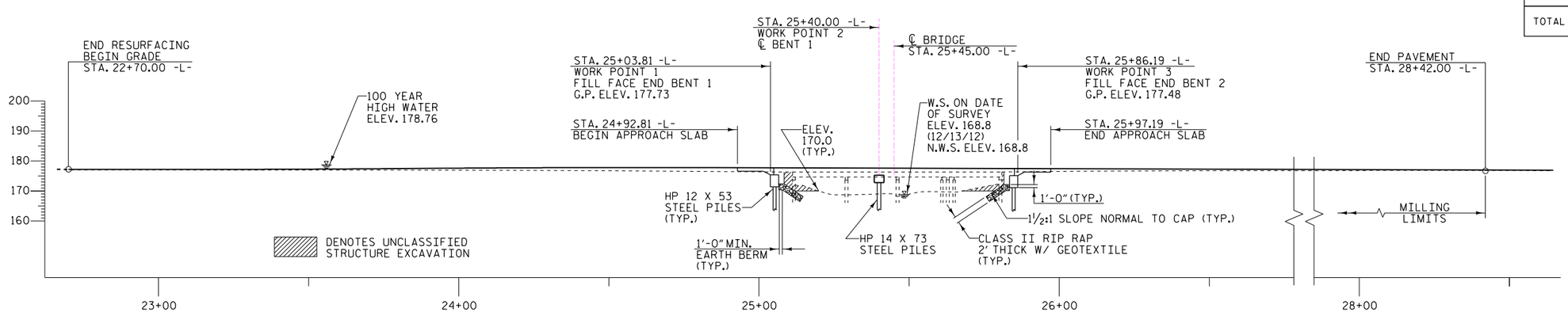

PROFILE ALONG ℄ SURVEY

SCALE: 1" = 20'

PROJECT NO. BD-5104L

NASH COUNTY

STATION: 25+45.00 -L-

REPLACES BRIDGE NO. 60

STATE OF NORTH CAROLINA
DEPARTMENT OF TRANSPORTATION
RALEIGH

BRIDGE ON SR 1109
OVER TURKEY CREEK OVERFLOW
BETWEEN SR 1126 & SR 1130

30'-10" CLEAR ROADWAY - 90° SKEW

PROGRESS DRAWING
DO NOT USE FOR CONSTRUCTION

PERMIT DRAWINGS PREPARED BY:

ECOLOGICAL ENGINEERING
1151 SE Cary Parkway, Suite 101 • Cary NC 27518

REVISIONS						SHEET NO.
NO.	BY:	DATE:	NO.	BY:	DATE:	1
1			3			TOTAL SHEETS
2			4			

BUFFER IMPACTS SUMMARY

			IMPACT									BUFFER REPLACEMENT	
			TYPE			ALLOWABLE			MITIGABLE				
SITE NO.	STRUCTURE SIZE / TYPE	STATION (FROM/TO)	ROAD CROSSING	BRIDGE	PARALLEL IMPACT	ZONE 1 (ft^2)	ZONE 2 (ft^2)	TOTAL (ft^2)	ZONE 1 (ft^2)	ZONE 2 (ft^2)	TOTAL (ft^2)	ZONE 1 (ft^2)	ZONE 2 (ft^2)
1	1@35', 1@45", 21" Cored Slab	24+84/25+40 -LT-		X		424.0	208.0						
2	1@35', 1@45", 21" Cored Slab	25+43/25+96 -LT-		X		567.0	406.0						
3	1@35', 1@45", 21" Cored Slab	25+56/25+89 -RT-		X		475.0	0.0						
4	1@35', 1@45", 21" Cored Slab	25+00/25+54 -RT-		X		574.0	286.0						
TOTAL:						2040.0	900.0	0.0	0.0	0.0	0.0		

N.C. DEPT. OF TRANSPORTATION
DIVISION OF HIGHWAYS

NASH COUNTY
PROJECT: 45350.1.13 (BD-5104L)
Bridge #60 over Turkey Creek overflow

6/11/2013
SHEET OF

Rev. May 2006

STANDARD SPECIAL PROVISION
AVAILABILITY OF FUNDS – TERMINATION OF CONTRACTS

(5-20-08) Z-2

General Statute 143C-6-11. (h) Highway Appropriation is hereby incorporated verbatim in this contract as follows:

(h) Amounts Encumbered. – Transportation project appropriations may be encumbered in the amount of allotments made to the Department of Transportation by the Director for the estimated payments for transportation project contract work to be performed in the appropriation fiscal year. The allotments shall be multiyear allotments and shall be based on estimated revenues and shall be subject to the maximum contract authority contained in *General Statute 143C-6-11(c)*. Payment for transportation project work performed pursuant to contract in any fiscal year other than the current fiscal year is subject to appropriations by the General Assembly. Transportation project contracts shall contain a schedule of estimated completion progress, and any acceleration of this progress shall be subject to the approval of the Department of Transportation provided funds are available. The State reserves the right to terminate or suspend any transportation project contract, and any transportation project contract shall be so terminated or suspended if funds will not be available for payment of the work to be performed during that fiscal year pursuant to the contract. In the event of termination of any contract, the contractor shall be given a written notice of termination at least 60 days before completion of scheduled work for which funds are available. In the event of termination, the contractor shall be paid for the work already performed in accordance with the contract specifications.

Payment will be made on any contract terminated pursuant to the special provision in accordance with Subarticle 108-13(E) of the *2012 Standard Specifications*.

STANDARD SPECIAL PROVISION
NCDOT GENERAL SEED SPECIFICATION FOR SEED QUALITY

(5-17-11) Z-3

Seed shall be sampled and tested by the North Carolina Department of Agriculture and Consumer Services, Seed Testing Laboratory. When said samples are collected, the vendor shall supply an independent laboratory report for each lot to be tested. Results from seed so sampled shall be final. Seed not meeting the specifications shall be rejected by the Department of Transportation and shall not be delivered to North Carolina Department of Transportation warehouses. If seed has been delivered it shall be available for pickup and replacement at the supplier's expense.

Any re-labeling required by the North Carolina Department of Agriculture and Consumer Services, Seed Testing Laboratory, that would cause the label to reflect as otherwise specified herein shall be rejected by the North Carolina Department of Transportation.

Seed shall be free from seeds of the noxious weeds Johnsongrass, Balloonvine, Jimsonweed, Witchweed, Itchgrass, Serrated Tussock, Showy Crotalaria, Smooth Crotalaria, Sicklepod, Sandbur, Wild Onion, and Wild Garlic. Seed shall not be labeled with the above weed species on the seed analysis label. Tolerances as applied by the Association of Official Seed Analysts will NOT be allowed for the above noxious weeds except for Wild Onion and Wild Garlic.

Tolerances established by the Association of Official Seed Analysts will generally be recognized. However, for the purpose of figuring pure live seed, the found pure seed and found germination percentages as reported by the North Carolina Department of Agriculture and Consumer Services, Seed Testing Laboratory will be used. Allowances, as established by the NCDOT, will be recognized for minimum pure live seed as listed on the following pages.

The specifications for restricted noxious weed seed refers to the number per pound as follows:

Restricted Noxious **Weed**	Limitations per Lb. Of Seed	Restricted Noxious **Weed**	Limitations per Lb. of Seed
Blessed Thistle	4 seeds	Cornflower (Ragged Robin)	27 seeds
Cocklebur	4 seeds	Texas Panicum	27 seeds
Spurred Anoda	4 seeds	Bracted Plantain	54 seeds
Velvetleaf	4 seeds	Buckhorn Plantain	54 seeds
Morning-glory	8 seeds	Broadleaf Dock	54 seeds
Corn Cockle	10 seeds	Curly Dock	54 seeds
Wild Radish	12 seeds	Dodder	54 seeds
Purple Nutsedge	27 seeds	Giant Foxtail	54 seeds
Yellow Nutsedge	27 seeds	Horsenettle	54 seeds
Canada Thistle	27 seeds	Quackgrass	54 seeds
Field Bindweed	27 seeds	Wild Mustard	54 seeds
Hedge Bindweed	27 seeds		

Seed of Pensacola Bahiagrass shall not contain more than 7% inert matter, Kentucky Bluegrass, Centipede and Fine or Hard Fescue shall not contain more than 5% inert matter whereas a

maximum of 2% inert matter will be allowed on all other kinds of seed. In addition, all seed shall not contain more than 2% other crop seed nor more than 1% total weed seed. The germination rate as tested by the North Carolina Department of Agriculture shall not fall below 70%, which includes both dormant and hard seed. Seed shall be labeled with not more than 7%, 5% or 2% inert matter (according to above specifications), 2% other crop seed and 1% total weed seed.

Exceptions may be made for minimum pure live seed allowances when cases of seed variety shortages are verified. Pure live seed percentages will be applied in a verified shortage situation. Those purchase orders of deficient seed lots will be credited with the percentage that the seed is deficient.

FURTHER SPECIFICATIONS FOR EACH SEED GROUP ARE GIVEN BELOW:

Minimum 85% pure live seed; maximum 1% total weed seed; maximum 2% total other crop seed; maximum 144 restricted noxious weed seed per pound. Seed less than 83% pure live seed will not be approved.

Sericea Lespedeza
Oats (seeds)

Minimum 80% pure live seed; maximum 1% total weed seed; maximum 2% total other crop; maximum 144 restricted noxious weed seed per pound. Seed less than 78% pure live seed will not be approved.

Tall Fescue (all approved varieties)
Kobe Lespedeza
Korean Lespedeza
Weeping Lovegrass
Carpetgrass
Bermudagrass
Browntop Millet
German Millet – Strain R
Clover – Red/White/Crimson

Minimum 78% pure live seed; maximum 1% total weed seed; maximum 2% total other crop seed; maximum 144 restricted noxious weed seed per pound. Seed less than 76% pure live seed will not be approved.

Common or Sweet Sundangrass

Minimum 76% pure live seed; maximum 1% total weed seed; maximum 2% total other crop seed; maximum 144 restricted noxious weed seed per pound. Seed less than 74% pure live seed will not be approved.

Rye (grain; all varieties)
Kentucky Bluegrass (all approved varieties)
Hard Fescue (all approved varieties)
Shrub (bicolor) Lespedeza

Minimum 70% pure live seed; maximum 1% total weed seed; maximum 2% total other crop seed; maximum 144 noxious weed seed per pound. Seed less than 70% pure live seed will not be approved.

Centipedegrass
Crownvetch
Pensacola Bahiagrass
Creeping Red Fescue
Japanese Millet
Reed Canary Grass
Zoysia

Minimum 70% pure live seed; maximum 1% total weed seed; maximum 2% total other crop seed; maximum 5% inert matter; maximum 144 restricted noxious weed seed per pound.

Barnyard Grass
Big Bluestem
Little Bluestem
Bristly Locust
Birdsfoot Trefoil
Indiangrass
Orchardgrass
Switchgrass
Yellow Blossom Sweet Clover

STANDARD SPECIAL PROVISION

ERRATA

(1-17-12) (Rev. 10-15-13) Z-4

Revise the *2012 Standard Specifications* as follows:

Division 2

Page 2-7, line 31, Article 215-2 Construction Methods, replace "Article 107-26" with "Article 107-25".

Page 2-17, Article 226-3, Measurement and Payment, line 2, delete "pipe culverts,".

Page 2-20, Subarticle 230-4(B), Contractor Furnished Sources, change references as follows: Line 1, replace "(4) Buffer Zone" with "(c) Buffer Zone"; **Line 12,** replace "(5) Evaluation for Potential Wetlands and Endangered Species" with "(d) Evaluation for Potential Wetlands and Endangered Species"; and **Line 33,** replace "(6) Approval" with "(4) Approval".

Division 4

Page 4-77, line 27, Subarticle 452-3(C) Concrete Coping, replace "sheet pile" with "reinforcement".

Division 6

Page 6-7, line 31, Article 609-3 Field Verification of Mixture and Job Mix Formula Adjustments, replace "30" with "45".

Page 6-10, line 42, Subarticle 609-6(C)(2), replace "Subarticle 609-6(E)" with "Subarticle 609-6(D)".

Page 6-11, Table 609-1 Control Limits, replace "Max. Spec. Limit" for the Target Source of $P_{0.075}/P_{be}$ Ratio with "1.0".

Page 6-40, Article 650-2 Materials, replace "Subarticle 1012-1(F)" with "Subarticle 1012-1(E)"

Division 8

Page 8-23, line 10, Article 838-2 Materials, replace "Portland Cement Concrete, Class B" with "Portland Cement Concrete, Class A".

Division 10

Page 10-74, Table 1056-1 Geotextile Requirements, replace "50%" for the UV Stability (Retained Strength) of Type 5 geotextiles with "70%".

Division 12

Page 12-7, Table 1205-3, add "FOR THERMOPLASTIC" to the end of the title.

Page 12-8, Subarticle 1205-5(B), line 13, replace "Table 1205-2" with "Table 1205-4".

Page 12-8, Table 1205-4 and 1205-5, replace "THERMOPLASTIC" in the title of these tables with "POLYUREA".

Page 12-9, Subarticle 1205-6(B), line 21, replace "Table 1205-4" with "Table 1205-6".

Page 12-11, Subarticle 1205-8(C), line 25, replace "Table 1205-5" with "Table 1205-7".

Division 15

Page 15-4, Subarticle 1505-3(F) Backfilling, line 26, replace "Subarticle 235-4(C)" with "Subarticle 235-3(C)".

Page 15-6, Subarticle 1510-3(B), after line 21, replace the allowable leakage formula with the following: $W = LD\sqrt{P} \div 148{,}000$

Page 15-6, Subarticle 1510-3(B), line 32, delete "may be performed concurrently or" and replace with "shall be performed".

Page 15-17, Subarticle 1540-3(E), line 27, delete "Type 1".

Division 17

Page 17-26, line 42, Subarticle 1731-3(D) Termination and Splicing within Interconnect Center, delete this subarticle.

Revise the *2012 Roadway Standard Drawings* as follows:

1633.01 Sheet 1 of 1, English Standard Drawing for Matting Installation, replace "1633.01" with "1631.01".

STANDARD SPECIAL PROVISION

PLANT AND PEST QUARANTINES
(Imported Fire Ant, Gypsy Moth, Witchweed, And Other Noxious Weeds)

(3-18-03) (Rev. 10-15-13) Z-04a

Within Quarantined Area

This project may be within a county regulated for plant and/or pests. If the project or any part of the Contractor's operations is located within a quarantined area, thoroughly clean all equipment prior to moving out of the quarantined area. Comply with federal/state regulations by obtaining a certificate or limited permit for any regulated article moving from the quarantined area.

Originating in a Quarantined County

Obtain a certificate or limited permit issued by the N.C. Department of Agriculture/United States Department of Agriculture. Have the certificate or limited permit accompany the article when it arrives at the project site.

Contact

Contact the N.C. Department of Agriculture/United States Department of Agriculture at 1-800-206-9333, 919-733-6932, or *http://www.ncagr.gov/plantind/* to determine those specific project sites located in the quarantined area or for any regulated article used on this project originating in a quarantined county.

Regulated Articles Include

1. Soil, sand, gravel, compost, peat, humus, muck, and decomposed manure, separately or with other articles. This includes movement of articles listed above that may be associated with cut/waste, ditch pulling, and shoulder cutting.
2. Plants with roots including grass sod.
3. Plant crowns and roots.
4. Bulbs, corms, rhizomes, and tubers of ornamental plants.
5. Hay, straw, fodder, and plant litter of any kind.
6. Clearing and grubbing debris.
7. Used agricultural cultivating and harvesting equipment.
8. Used earth-moving equipment.
9. Any other products, articles, or means of conveyance, of any character, if determined by an inspector to present a hazard of spreading imported fire ant, gypsy moth, witchweed or other noxious weeds.

STANDARD SPECIAL PROVISION

AWARD OF CONTRACT

(6-28-77) Z-6

"The North Carolina Department of Transportation, in accordance with the provisions of *Title VI of the Civil Rights Act of 1964* (78 Stat. 252) and the Regulations of the Department of Transportation (*49 C.F.R., Part 21*), issued pursuant to such act, hereby notifies all bidders that it will affirmatively insure that the contract entered into pursuant to this advertisement will be awarded to the lowest responsible bidder without discrimination on the ground of race, color, or national origin".

STANDARD SPECIAL PROVISION

MINORITY AND FEMALE EMPLOYMENT REQUIREMENTS

Z-7

NOTICE OF REQUIREMENTS FOR AFFIRMATIVE ACTION TO ENSURE EQUAL EMPLOYMENT OPPORTUNITY (*EXECUTIVE NUMBER 11246*)

1. The goals and timetables for minority and female participation, expressed in percentage terms for the Contractor's aggregate workforce in each trade on all construction work in the covered area, see as shown on the attached sheet entitled "Employment Goals for Minority and Female participation".

These goals are applicable to all the Contractor's construction work (whether or not it is Federal or federally assisted) performed in the covered area. If the Contractor performs construction work in a geographical area located outside of the covered area, it shall apply the goals established for such geographical area where the work is actually performed. With regard to this second area, the Contractor also is subject to the goals for both its federally involved and nonfederally involved construction.

The Contractor's compliance with the Executive Order and the regulations in *41 CFR Part 60-4* shall be based on its implementation of the Equal Opportunity Clause, specific affirmative action obligations required by the specifications set forth in *41 CFR 60-4.3(a)*, and its effort to meet the goals. The hours of minority and female employment and training must be substantially uniform throughout the length of the contract, and in each trade and the Contractor shall make a good faith effort to employ minorities and women evenly on each of its projects. The transfer of minority or female employees or trainees from Contractor to Contractor or from project to project or the sole purpose of meeting the Contractor's goals shall be a violation of the contract, the executive Order and the regulations *in 41 CFR Part 60-4*. Compliance with the goals will be measured against the total work hours performed.

2. As used in this Notice and in the contract resulting from this solicitation, the "covered area" is the county or counties shown on the cover sheet of the proposal form and contract.

EMPLOYMENT GOALS FOR MINORITY AND FEMALE PARTICIPATION

Economic Areas

Area 023 29.7%
Bertie County
Camden County
Chowan County
Gates County
Hertford County
Pasquotank County
Perquimans County

Area 024 31.7%
Beaufort County
Carteret County
Craven County
Dare County
Edgecombe County
Green County
Halifax County
Hyde County
Jones County
Lenoir County
Martin County
Nash County
Northampton County
Pamlico County
Pitt County
Tyrrell County
Washington County
Wayne County
Wilson County

Area 025 23.5%
Columbus County
Duplin County
Onslow County
Pender County

Area 026 33.5%
Bladen County
Hoke County
Richmond County
Robeson County
Sampson County
Scotland County

Area 027 24.7%
Chatham County
Franklin County
Granville County
Harnett County
Johnston County
Lee County
Person County
Vance County
Warren County

Area 028 15.5%
Alleghany County
Ashe County
Caswell County
Davie County
Montgomery County
Moore County
Rockingham County
Surry County
Watauga County
Wilkes County

Area 029 15.7%
Alexander County
Anson County
Burke County
Cabarrus County
Caldwell County
Catawba County
Cleveland County
Iredell County
Lincoln County
Polk County
Rowan County
Rutherford County
Stanly County

Area 0480 8.5%
Buncombe County
Madison County

Area 030 6.3%
Avery County
Cherokee County
Clay County
Graham County
Haywood County
Henderson County
Jackson County
McDowell County
Macon County
Mitchell County
Swain County
Transylvania County
Yancey County

SMSA Areas

Area 5720 26.6%
Currituck County

Area 9200 20.7%
Brunswick County
New Hanover County

Area 2560 24.2%
Cumberland County

Area 6640 22.8%
Durham County
Orange County
Wake County

Area 1300 16.2%
Alamance County

Area 3120 16.4%
Davidson County
Forsyth County
Guilford County
Randolph County
Stokes County
Yadkin County

Area 1520 18.3%
Gaston County
Mecklenburg County
Union County

Goals for Female

Participation in Each Trade

(Statewide) 6.9%

STANDARD SPECIAL PROVISION

REQUIRED CONTRACT PROVISIONS FEDERAL - AID CONSTRUCTION CONTRACTS

FHWA - 1273 Electronic Version - May 1, 2012 Z-8

I. General
II. Nondiscrimination
III. Nonsegregated Facilities
IV. Davis-Bacon and Related Act Provisions
V. Contract Work Hours and Safety Standards Act Provisions
VI. Subletting or Assigning the Contract
VII. Safety: Accident Prevention
VIII. False Statements Concerning Highway Projects
IX. Implementation of Clean Air Act and Federal Water Pollution Control Act
X. Compliance with Governmentwide Suspension and Debarment Requirements
XI. Certification Regarding Use of Contract Funds for Lobbying

ATTACHMENTS

A. Employment and Materials Preference for Appalachian Development Highway System or Appalachian Local Access Road Contracts (included in Appalachian contracts only)

I. GENERAL

1. Form FHWA-1273 must be physically incorporated in each construction contract funded under Title 23 (excluding emergency contracts solely intended for debris removal). The contractor (or subcontractor) must insert this form in each subcontract and further require its inclusion in all lower tier subcontracts (excluding purchase orders, rental agreements and other agreements for supplies or services).

   The applicable requirements of Form FHWA-1273 are incorporated by reference for work done under any purchase order, rental agreement or agreement for other services. The prime contractor shall be responsible for compliance by any subcontractor, lower-tier subcontractor or service provider.

   Form FHWA-1273 must be included in all Federal-aid design-build contracts, in all subcontracts and in lower tier subcontracts (excluding subcontracts for design services, purchase orders, rental agreements and other agreements for supplies or services). The design-builder shall be responsible for compliance by any subcontractor, lower-tier subcontractor or service provider.

   Contracting agencies may reference Form FHWA-1273 in bid proposal or request for proposal documents, however, the Form FHWA-1273 must be physically incorporated (not referenced) in all contracts, subcontracts and lower-tier subcontracts (excluding purchase orders, rental agreements and other agreements for supplies or services related to a construction contract).
2. Subject to the applicability criteria noted in the following sections, these contract provisions shall apply to all work performed on the contract by the contractor's own organization and with the assistance of workers under the contractor's immediate superintendence and to all work performed on the contract by piecework, station work, or by subcontract.
3. A breach of any of the stipulations contained in these Required Contract Provisions may be sufficient grounds for withholding of progress payments, withholding of final payment, termination of the contract, suspension / debarment or any other action determined to be appropriate by the contracting agency and FHWA.
4. Selection of Labor: During the performance of this contract, the contractor shall not use convict labor for any purpose within the limits of a construction project on a Federal-aid highway unless it is labor performed by convicts who are on parole, supervised release, or probation. The term Federal-aid highway does not include roadways functionally classified as local roads or rural minor collectors.

II. NONDISCRIMINATION

The provisions of this section related to 23 CFR Part 230 are applicable to all Federal-aid construction contracts and to all related construction subcontracts of $10,000 or more. The provisions of 23 CFR Part 230 are not applicable to material supply, engineering, or architectural service contracts.

In addition, the contractor and all subcontractors must comply with the following policies: Executive Order 11246, 41 CFR 60, 29 CFR 1625-1627, Title 23 USC Section 140, the Rehabilitation Act of 1973, as amended (29 USC 794), Title VI of the Civil Rights Act of 1964, as amended, and related regulations including 49 CFR Parts 21, 26 and 27; and 23 CFR Parts 200, 230, and 633.

The contractor and all subcontractors must comply with: the requirements of the Equal Opportunity Clause in 41 CFR 60-1.4(b) and, for all construction contracts exceeding $10,000, the Standard Federal Equal Employment Opportunity Construction Contract Specifications in 41 CFR 60-4.3.

Note: The U.S. Department of Labor has exclusive authority to determine compliance with Executive Order 11246 and the policies of the Secretary of Labor including 41 CFR 60, and 29 CFR 1625-1627. The contracting agency and the FHWA have the authority and the responsibility to ensure compliance with Title 23 USC Section 140, the Rehabilitation Act of 1973, as amended (29 USC 794), and Title VI of the Civil Rights Act of 1964, as amended, and related regulations including 49 CFR Parts 21, 26 and 27; and 23 CFR Parts 200, 230, and 633.

The following provision is adopted from 23 CFR 230, Appendix A, with appropriate revisions to conform to the U.S. Department of Labor (US DOL) and FHWA requirements.

1. **Equal Employment Opportunity:** Equal employment opportunity (EEO) requirements not to discriminate and to take affirmative action to assure equal opportunity as set forth under laws, executive orders, rules, regulations (28 CFR 35, 29 CFR 1630, 29 CFR 1625-1627, 41 CFR 60 and 49 CFR 27) and orders of the Secretary of Labor as modified by the provisions prescribed herein, and imposed pursuant to 23 U.S.C. 140 shall constitute the EEO and specific affirmative action standards for the contractor's project activities under this contract. The provisions of the Americans with Disabilities Act of 1990 (42 U.S.C. 12101 et seq.) set forth under 28 CFR 35 and 29 CFR 1630 are incorporated by reference in this contract. In the execution of this contract, the contractor agrees to comply with the following minimum specific requirement activities of EEO:

a. The contractor will work with the contracting agency and the Federal Government to ensure that it has made every good faith effort to provide equal opportunity with respect to all of its terms and conditions of employment and in their review of activities under the contract.
b. The contractor will accept as its operating policy the following statement:
"It is the policy of this Company to assure that applicants are employed, and that employees are treated during employment, without regard to their race, religion, sex, color, national origin, age or disability. Such action shall include: employment, upgrading, demotion, or transfer; recruitment or recruitment advertising; layoff or termination; rates of pay or other forms of compensation; and selection for training, including apprenticeship, pre-apprenticeship, and/or on-the-job training."

2. **EEO Officer:** The contractor will designate and make known to the contracting officers an EEO Officer who will have the responsibility for and must be capable of effectively administering and promoting an active EEO program and who must be assigned adequate authority and responsibility to do so.
3. **Dissemination of Policy:** All members of the contractor's staff who are authorized to hire, supervise, promote, and discharge employees, or who recommend such action, or who are substantially involved in such action, will be made fully cognizant of, and will implement, the contractor's EEO policy and contractual responsibilities to provide EEO in each grade and classification of employment. To ensure that the above agreement will be met, the following actions will be taken as a minimum:
   a. Periodic meetings of supervisory and personnel office employees will be conducted before the start of work and then not less often than once every six months, at which time the contractor's EEO policy and its implementation will be reviewed and explained. The meetings will be conducted by the EEO Officer.
   b. All new supervisory or personnel office employees will be given a thorough indoctrination by the EEO Officer, covering all major aspects of the contractor's EEO obligations within thirty days following their reporting for duty with the contractor.
   c. All personnel who are engaged in direct recruitment for the project will be instructed by the EEO Officer in the contractor's procedures for locating and hiring minorities and women.
   d. Notices and posters setting forth the contractor's EEO policy will be placed in areas readily accessible to employees, applicants for employment and potential employees.
   e. The contractor's EEO policy and the procedures to implement such policy will be brought to the attention of employees by means of meetings, employee handbooks, or other appropriate means.
4. **Recruitment:** When advertising for employees, the contractor will include in all advertisements for employees the notation: "An Equal Opportunity Employer." All such advertisements will be placed in publications having a large circulation among minorities and women in the area from which the project work force would normally be derived.
   a. The contractor will, unless precluded by a valid bargaining agreement, conduct systematic and direct recruitment through public and private employee referral sources likely to yield qualified minorities and women. To meet this requirement, the contractor will identify sources of potential minority group employees, and establish with such identified sources procedures whereby minority and women applicants may be referred to the contractor for employment consideration.
   b. In the event the contractor has a valid bargaining agreement providing for exclusive hiring hall referrals, the contractor is expected to observe the provisions of that agreement to the extent that the system meets the contractor's compliance with EEO contract provisions. Where implementation of such an agreement has the effect of discriminating against minorities or women, or obligates the contractor to do the same, such implementation violates Federal nondiscrimination provisions.
   c. The contractor will encourage its present employees to refer minorities and women as applicants for employment. Information and procedures with regard to referring such applicants will be discussed with employees.
5. **Personnel Actions:** Wages, working conditions, and employee benefits shall be established and administered, and personnel actions of every type, including hiring, upgrading, promotion, transfer, demotion, layoff, and termination, shall be taken without regard to race, color, religion, sex, national origin, age or disability. The following procedures shall be followed:
   a. The contractor will conduct periodic inspections of project sites to insure that working conditions and employee facilities do not indicate discriminatory treatment of project site personnel.
   b. The contractor will periodically evaluate the spread of wages paid within each classification to determine any evidence of discriminatory wage practices.
   c. The contractor will periodically review selected personnel actions in depth to determine whether there is evidence of discrimination. Where evidence is found, the contractor will promptly take corrective action. If the review indicates that the discrimination may extend beyond the actions reviewed, such corrective action shall include all affected persons.
   d. The contractor will promptly investigate all complaints of alleged discrimination made to the contractor in connection with its obligations under this contract, will attempt to resolve such complaints, and will take appropriate corrective action within a reasonable time. If the investigation indicates that the discrimination may affect persons other than the complainant, such corrective action shall include such other persons. Upon completion of each investigation, the contractor will inform every complainant of all of their avenues of appeal.
6. **Training and Promotion:**
   a. The contractor will assist in locating, qualifying, and increasing the skills of minorities and women who are applicants for employment or current employees. Such efforts should be aimed at developing full journey level status employees in the type of trade or job classification involved.
   b. Consistent with the contractor's work force requirements and as permissible under Federal and State regulations, the contractor shall make full use of training programs, i.e., apprenticeship, and on-the-job training programs for the geographical area of contract performance. In the event a special provision for training is provided under this contract, this subparagraph will be superseded as indicated in the special provision. The contracting agency may reserve training positions for persons who receive welfare assistance in accordance with 23 U.S.C. 140(a).
   c The contractor will advise employees and applicants for employment of available training programs and entrance requirements for each.
   d. The contractor will periodically review the training and promotion potential of employees who are minorities and women and will encourage eligible employees to apply for such training and promotion.
7. **Unions:** If the contractor relies in whole or in part upon unions as a source of employees, the contractor will use good faith efforts to obtain the cooperation of such unions to increase opportunities for minorities and women. Actions by the contractor, either directly or through a contractor's association acting as agent, will include the procedures set forth below:
   a. The contractor will use good faith efforts to develop, in cooperation with the unions, joint training programs aimed toward qualifying more minorities and women for membership in the unions and increasing the skills of minorities and women so that they may qualify for higher paying employment.
   b. The contractor will use good faith efforts to incorporate an EEO clause into each union agreement to the end that such union will be contractually bound to refer applicants without regard to their race, color, religion, sex, national origin, age or disability.

c. The contractor is to obtain information as to the referral practices and policies of the labor union except that to the extent such information is within the exclusive possession of the labor union and such labor union refuses to furnish such information to the contractor, the contractor shall so certify to the contracting agency and shall set forth what efforts have been made to obtain such information.

d. In the event the union is unable to provide the contractor with a reasonable flow of referrals within the time limit set forth in the collective bargaining agreement, the contractor will, through independent recruitment efforts, fill the employment vacancies without regard to race, color, religion, sex, national origin, age or disability; making full efforts to obtain qualified and/or qualifiable minorities and women. The failure of a union to provide sufficient referrals (even though it is obligated to provide exclusive referrals under the terms of a collective bargaining agreement) does not relieve the contractor from the requirements of this paragraph. In the event the union referral practice prevents the contractor from meeting the obligations pursuant to Executive Order 11246, as amended, and these special provisions, such contractor shall immediately notify the contracting agency.

8. **Reasonable Accommodation for Applicants / Employees with Disabilities:** The contractor must be familiar with the requirements for and comply with the Americans with Disabilities Act and all rules and regulations established there under. Employers must provide reasonable accommodation in all employment activities unless to do so would cause an undue hardship.

9. **Selection of Subcontractors, Procurement of Materials and Leasing of Equipment:** The contractor shall not discriminate on the grounds of race, color, religion, sex, national origin, age or disability in the selection and retention of subcontractors, including procurement of materials and leases of equipment. The contractor shall take all necessary and reasonable steps to ensure nondiscrimination in the administration of this contract.

a. The contractor shall notify all potential subcontractors and suppliers and lessors of their EEO obligations under this contract.

b. The contractor will use good faith efforts to ensure subcontractor compliance with their EEO obligations.

10. **Assurance Required by 49 CFR 26.13(b):**

a. The requirements of 49 CFR Part 26 and the State DOT's U.S. DOT-approved DBE program are incorporated by reference.

b. The contractor or subcontractor shall not discriminate on the basis of race, color, national origin, or sex in the performance of this contract. The contractor shall carry out applicable requirements of 49 CFR Part 26 in the award and administration of DOT-assisted contracts. Failure by the contractor to carry out these requirements is a material breach of this contract, which may result in the termination of this contract or such other remedy as the contracting agency deems appropriate.

11. **Records and Reports:** The contractor shall keep such records as necessary to document compliance with the EEO requirements. Such records shall be retained for a period of three years following the date of the final payment to the contractor for all contract work and shall be available at reasonable times and places for inspection by authorized representatives of the contracting agency and the FHWA.

a. The records kept by the contractor shall document the following:

(1) The number and work hours of minority and non-minority group members and women employed in each work classification on the project;

(2) The progress and efforts being made in cooperation with unions, when applicable, to increase employment opportunities for minorities and women; and

(3) The progress and efforts being made in locating, hiring, training, qualifying, and upgrading minorities and women;

b. The contractors and subcontractors will submit an annual report to the contracting agency each July for the duration of the project, indicating the number of minority, women, and non-minority group employees currently engaged in each work classification required by the contract work. This information is to be reported on Form FHWA-1391. The staffing data should represent the project work force on board in all or any part of the last payroll period preceding the end of July. If on-the-job training is being required by special provision, the contractor will be required to collect and report training data. The employment data should reflect the work force on board during all or any part of the last payroll period preceding the end of July.

III. NONSEGREGATED FACILITIES

This provision is applicable to all Federal-aid construction contracts and to all related construction subcontracts of $10,000 or more.

The contractor must ensure that facilities provided for employees are provided in such a manner that segregation on the basis of race, color, religion, sex, or national origin cannot result. The contractor may neither require such segregated use by written or oral policies nor tolerate such use by employee custom. The contractor's obligation extends further to ensure that its employees are not assigned to perform their services at any location, under the contractor's control, where the facilities are segregated. The term "facilities" includes waiting rooms, work areas, restaurants and other eating areas, time clocks, restrooms, washrooms, locker rooms, and other storage or dressing areas, parking lots, drinking fountains, recreation or entertainment areas, transportation, and housing provided for employees. The contractor shall provide separate or single-user restrooms and necessary dressing or sleeping areas to assure privacy between sexes.

IV. DAVIS-BACON AND RELATED ACT PROVISIONS

This section is applicable to all Federal-aid construction projects exceeding $2,000 and to all related subcontracts and lower-tier subcontracts (regardless of subcontract size). The requirements apply to all projects located within the right-of-way of a roadway that is functionally classified as Federal-aid highway. This excludes roadways functionally classified as local roads or rural minor collectors, which are exempt. Contracting agencies may elect to apply these requirements to other projects.

The following provisions are from the U.S. Department of Labor regulations in 29 CFR 5.5 "Contract provisions and related matters" with minor revisions to conform to the FHWA-1273 format and FHWA program requirements.

1. **Minimum wages**

a. All laborers and mechanics employed or working upon the site of the work, will be paid unconditionally and not less often than once a week, and without subsequent deduction or rebate on any account (except such payroll deductions as are permitted by regulations issued by the Secretary of Labor under the Copeland Act (29 CFR part 3)), the full amount of wages and bona fide fringe benefits (or cash equivalents thereof) due at time of payment computed at rates not less than those contained in the wage determination of the Secretary of Labor which is attached hereto and made a part hereof, regardless of any contractual relationship which may be alleged to exist between the contractor and such laborers and mechanics.

Contributions made or costs reasonably anticipated for bona fide fringe benefits under section 1(b)(2) of the Davis-Bacon Act on behalf of laborers or mechanics are considered wages paid to such laborers or mechanics, subject to the provisions of paragraph 1.d. of this section; also, regular contributions made or costs incurred for more than a weekly period (but not less often than quarterly) under plans, funds, or programs which cover the particular weekly period, are deemed to be constructively made or incurred during such weekly period. Such laborers and mechanics shall be paid the appropriate wage rate and fringe benefits on the wage determination for the classification of work actually performed, without regard to skill, except as provided in 29 CFR 5.5(a)(4). Laborers or mechanics performing work in more than one

classification may be compensated at the rate specified for each classification for the time actually worked therein: Provided, That the employer's payroll records accurately set forth the time spent in each classification in which work is performed. The wage determination (including any additional classification and wage rates conformed under paragraph 1.b. of this section) and the Davis-Bacon poster (WH–1321) shall be posted at all times by the contractor and its subcontractors at the site of the work in a prominent and accessible place where it can be easily seen by the workers.

b. (1) The contracting officer shall require that any class of laborers or mechanics, including helpers, which is not listed in the wage determination and which is to be employed under the contract shall be classified in conformance with the wage determination. The contracting officer shall approve an additional classification and wage rate and fringe benefits therefore only when the following criteria have been met:

(i) The work to be performed by the classification requested is not performed by a classification in the wage determination; and

(ii) The classification is utilized in the area by the construction industry; and

(iii) The proposed wage rate, including any bona fide fringe benefits, bears a reasonable relationship to the wage rates contained in the wage determination.

(2) If the contractor and the laborers and mechanics to be employed in the classification (if known), or their representatives, and the contracting officer agree on the classification and wage rate (including the amount designated for fringe benefits where appropriate), a report of the action taken shall be sent by the contracting officer to the Administrator of the Wage and Hour Division, Employment Standards Administration, U.S. Department of Labor, Washington, DC 20210. The Administrator, or an authorized representative, will approve, modify, or disapprove every additional classification action within 30 days of receipt and so advise the contracting officer or will notify the contracting officer within the 30-day period that additional time is necessary.

(3) In the event the contractor, the laborers or mechanics to be employed in the classification or their representatives, and the contracting officer do not agree on the proposed classification and wage rate (including the amount designated for fringe benefits, where appropriate), the contracting officer shall refer the questions, including the views of all interested parties and the recommendation of the contracting officer, to the Wage and Hour Administrator for determination. The Wage and Hour Administrator, or an authorized representative, will issue a determination within 30 days of receipt and so advise the contracting officer or will notify the contracting officer within the 30-day period that additional time is necessary.

(4) The wage rate (including fringe benefits where appropriate) determined pursuant to paragraphs 1.b.(2) or 1.b.(3) of this section, shall be paid to all workers performing work in the classification under this contract from the first day on which work is performed in the classification.

c. Whenever the minimum wage rate prescribed in the contract for a class of laborers or mechanics includes a fringe benefit which is not expressed as an hourly rate, the contractor shall either pay the benefit as stated in the wage determination or shall pay another bona fide fringe benefit or an hourly cash equivalent thereof.

d. If the contractor does not make payments to a trustee or other third person, the contractor may consider as part of the wages of any laborer or mechanic the amount of any costs reasonably anticipated in providing bona fide fringe benefits under a plan or program, Provided, That the Secretary of Labor has found, upon the written request of the contractor, that the applicable standards of the Davis-Bacon Act have been met. The Secretary of Labor may require the contractor to set aside in a separate account assets for the meeting of obligations under the plan or program.

2. **Withholding.** The contracting agency shall upon its own action or upon written request of an authorized representative of the Department of Labor, withhold or cause to be withheld from the contractor under this contract, or any other Federal contract with the same prime contractor, or any other federally-assisted contract subject to Davis-Bacon prevailing wage requirements, which is held by the same prime contractor, so much of the accrued payments or advances as may be considered necessary to pay laborers and mechanics, including apprentices, trainees, and helpers, employed by the contractor or any subcontractor the full amount of wages required by the contract. In the event of failure to pay any laborer or mechanic, including any apprentice, trainee, or helper, employed or working on the site of the work, all or part of the wages required by the contract, the contracting agency may, after written notice to the contractor, take such action as may be necessary to cause the suspension of any further payment, advance, or guarantee of funds until such violations have ceased.

3. **Payrolls and basic records**

a. Payrolls and basic records relating thereto shall be maintained by the contractor during the course of the work and preserved for a period of three years thereafter for all laborers and mechanics working at the site of the work. Such records shall contain the name, address, and social security number of each such worker, his or her correct classification, hourly rates of wages paid (including rates of contributions or costs anticipated for bona fide fringe benefits or cash equivalents thereof of the types described in section 1(b)(2)(B) of the Davis-Bacon Act), daily and weekly number of hours worked, deductions made and actual wages paid. Whenever the Secretary of Labor has found under 29 CFR 5.5(a)(1)(iv) that the wages of any laborer or mechanic include the amount of any costs reasonably anticipated in providing benefits under a plan or program described in section 1(b)(2)(B) of the Davis-Bacon Act, the contractor shall maintain records which show that the commitment to provide such benefits is enforceable, that the plan or program is financially responsible, and that the plan or program has been communicated in writing to the laborers or mechanics affected, and records which show the costs anticipated or the actual cost incurred in providing such benefits. Contractors employing apprentices or trainees under approved programs shall maintain written evidence of the registration of apprenticeship programs and certification of trainee programs, the registration of the apprentices and trainees, and the ratios and wage rates prescribed in the applicable programs.

b. (1) The contractor shall submit weekly for each week in which any contract work is performed a copy of all payrolls to the contracting agency. The payrolls submitted shall set out accurately and completely all of the information required to be maintained under 29 CFR 5.5(a)(3)(i), except that full social security numbers and home addresses shall not be included on weekly transmittals. Instead the payrolls shall only need to include an individually identifying number for each employee (e.g. , the last four digits of the employee's social security number). The required weekly payroll information may be submitted in any form desired. Optional Form WH–347 is available for this purpose from the Wage and Hour Division Web site at http://www.dol.gov/esa/whd/forms/ wh347instr.htm or its successor site. The prime contractor is responsible for the submission of copies of payrolls by all subcontractors. Contractors and subcontractors shall maintain the full social security number and current address of each covered worker, and shall provide them upon request to the contracting agency for transmission to the State DOT, the FHWA or the Wage and Hour Division of the Department of Labor for purposes of an investigation or audit of compliance with prevailing wage requirements. It is not a violation of this section for a prime contractor to require a subcontractor to provide addresses and social security numbers to the prime contractor for its own records, without weekly submission to the contracting agency.

(2) Each payroll submitted shall be accompanied by a “Statement of Compliance,” signed by the contractor or subcontractor or his or her agent who pays or supervises the payment of the persons employed under the contract and shall certify the following:

(i) That the payroll for the payroll period contains the information required to be provided under §5.5 (a)(3)(ii) of Regulations, 29 CFR part 5, the appropriate information is being maintained under §5.5 (a)(3)(i) of Regulations, 29 CFR part 5, and that such information is correct and complete;

(ii) That each laborer or mechanic (including each helper, apprentice, and trainee) employed on the contract during the payroll period has been paid the full weekly wages earned, without rebate, either directly or indirectly, and that no deductions have been made either directly or indirectly from the full wages earned, other than permissible deductions as set forth in Regulations, 29 CFR part 3;

(iii) That each laborer or mechanic has been paid not less than the applicable wage rates and fringe benefits or cash equivalents for the classification of work performed, as specified in the applicable wage determination incorporated into the contract.

(3) The weekly submission of a properly executed certification set forth on the reverse side of Optional Form WH–347 shall satisfy the requirement for submission of the "Statement of Compliance" required by paragraph 3.b.(2) of this section.

(4) The falsification of any of the above certifications may subject the contractor or subcontractor to civil or criminal prosecution under section 1001 of title 18 and section 231 of title 31 of the United States Code.

c. The contractor or subcontractor shall make the records required under paragraph 3.a. of this section available for inspection, copying, or transcription by authorized representatives of the contracting agency, the State DOT, the FHWA, or the Department of Labor, and shall permit such representatives to interview employees during working hours on the job. If the contractor or subcontractor fails to submit the required records or to make them available, the FHWA may, after written notice to the contractor, the contracting agency or the State DOT, take such action as may be necessary to cause the suspension of any further payment, advance, or guarantee of funds. Furthermore, failure to submit the required records upon request or to make such records available may be grounds for debarment action pursuant to 29 CFR 5.12.

4. **Apprentices and trainees**

a. Apprentices (programs of the USDOL). Apprentices will be permitted to work at less than the predetermined rate for the work they performed when they are employed pursuant to and individually registered in a bona fide apprenticeship program registered with the U.S. Department of Labor, Employment and Training Administration, Office of Apprenticeship Training, Employer and Labor Services, or with a State Apprenticeship Agency recognized by the Office, or if a person is employed in his or her first 90 days of probationary employment as an apprentice in such an apprenticeship program, who is not individually registered in the program, but who has been certified by the Office of Apprenticeship Training, Employer and Labor Services or a State Apprenticeship Agency (where appropriate) to be eligible for probationary employment as an apprentice.

The allowable ratio of apprentices to journeymen on the job site in any craft classification shall not be greater than the ratio permitted to the contractor as to the entire work force under the registered program. Any worker listed on a payroll at an apprentice wage rate, who is not registered or otherwise employed as stated above, shall be paid not less than the applicable wage rate on the wage determination for the classification of work actually performed. In addition, any apprentice performing work on the job site in excess of the ratio permitted under the registered program shall be paid not less than the applicable wage rate on the wage determination for the work actually performed. Where a contractor is performing construction on a project in a locality other than that in which its program is registered, the ratios and wage rates (expressed in percentages of the journeyman's hourly rate) specified in the contractor's or subcontractor's registered program shall be observed.

Every apprentice must be paid at not less than the rate specified in the registered program for the apprentice's level of progress, expressed as a percentage of the journeymen hourly rate specified in the applicable wage determination. Apprentices shall be paid fringe benefits in accordance with the provisions of the apprenticeship program. If the apprenticeship program does not specify fringe benefits, apprentices must be paid the full amount of fringe benefits listed on the wage determination for the applicable classification. If the Administrator determines that a different practice prevails for the applicable apprentice classification, fringes shall be paid in accordance with that determination.

In the event the Office of Apprenticeship Training, Employer and Labor Services, or a State Apprenticeship Agency recognized by the Office, withdraws approval of an apprenticeship program, the contractor will no longer be permitted to utilize apprentices at less than the applicable predetermined rate for the work performed until an acceptable program is approved.

b. Trainees (programs of the USDOL). Except as provided in 29 CFR 5.16, trainees will not be permitted to work at less than the predetermined rate for the work performed unless they are employed pursuant to and individually registered in a program which has received prior approval, evidenced by formal certification by the U.S. Department of Labor, Employment and Training Administration.

The ratio of trainees to journeymen on the job site shall not be greater than permitted under the plan approved by the Employment and Training Administration.

Every trainee must be paid at not less than the rate specified in the approved program for the trainee's level of progress, expressed as a percentage of the journeyman hourly rate specified in the applicable wage determination. Trainees shall be paid fringe benefits in accordance with the provisions of the trainee program. If the trainee program does not mention fringe benefits, trainees shall be paid the full amount of fringe benefits listed on the wage determination unless the Administrator of the Wage and Hour Division determines that there is an apprenticeship program associated with the corresponding journeyman wage rate on the wage determination which provides for less than full fringe benefits for apprentices. Any employee listed on the payroll at a trainee rate who is not registered and participating in a training plan approved by the Employment and Training Administration shall be paid not less than the applicable wage rate on the wage determination for the classification of work actually performed. In addition, any trainee performing work on the job site in excess of the ratio permitted under the registered program shall be paid not less than the applicable wage rate on the wage determination for the work actually performed.

In the event the Employment and Training Administration withdraws approval of a training program, the contractor will no longer be permitted to utilize trainees at less than the applicable predetermined rate for the work performed until an acceptable program is approved.

c. Equal employment opportunity. The utilization of apprentices, trainees and journeymen under this part shall be in conformity with the equal employment opportunity requirements of Executive Order 11246, as amended, and 29 CFR part 30.

d. Apprentices and Trainees (programs of the U.S. DOT). Apprentices and trainees working under apprenticeship and skill training programs which have been certified by the Secretary of Transportation as promoting EEO in connection with Federal-aid highway construction programs are not subject to the requirements of paragraph 4 of this Section IV. The straight time hourly wage rates for apprentices and trainees under such programs will be established by the particular programs. The ratio of apprentices and trainees to journeymen shall not be greater than permitted by the terms of the particular program.

5. **Compliance with Copeland Act requirements.** The contractor shall comply with the requirements of 29 CFR part 3, which are incorporated by reference in this contract.

6. **Subcontracts.** The contractor or subcontractor shall insert Form FHWA-1273 in any subcontracts and also require the subcontractors to include Form FHWA-1273 in any lower tier subcontracts. The prime contractor shall be responsible for the compliance by any subcontractor or lower tier subcontractor with all the contract clauses in 29 CFR 5.5.

7. **Contract termination:** debarment. A breach of the contract clauses in 29 CFR 5.5 may be grounds for termination of the contract, and for debarment as a contractor and a subcontractor as provided in 29 CFR 5.12.

8. **Compliance with Davis-Bacon and Related Act requirements.** All rulings and interpretations of the Davis-Bacon and Related Acts contained in 29 CFR parts 1, 3, and 5 are herein incorporated by reference in this contract.
9. **Disputes concerning labor standards.** Disputes arising out of the labor standards provisions of this contract shall not be subject to the general disputes clause of this contract. Such disputes shall be resolved in accordance with the procedures of the Department of Labor set forth in 29 CFR parts 5, 6, and 7. Disputes within the meaning of this clause include disputes between the contractor (or any of its subcontractors) and the contracting agency, the U.S. Department of Labor, or the employees or their representatives.
10. **Certification of eligibility.**
    a. By entering into this contract, the contractor certifies that neither it (nor he or she) nor any person or firm who has an interest in the contractor's firm is a person or firm ineligible to be awarded Government contracts by virtue of section 3(a) of the Davis-Bacon Act or 29 CFR 5.12(a)(1).
    b. No part of this contract shall be subcontracted to any person or firm ineligible for award of a Government contract by virtue of section 3(a) of the Davis-Bacon Act or 29 CFR 5.12(a)(1).
    c. The penalty for making false statements is prescribed in the U.S. Criminal Code, 18 U.S.C. 1001.

V. CONTRACT WORK HOURS AND SAFETY STANDARDS ACT

The following clauses apply to any Federal-aid construction contract in an amount in excess of $100,000 and subject to the overtime provisions of the Contract Work Hours and Safety Standards Act. These clauses shall be inserted in addition to the clauses required by 29 CFR 5.5(a) or 29 CFR 4.6. As used in this paragraph, the terms laborers and mechanics include watchmen and guards.

1. **Overtime requirements.** No contractor or subcontractor contracting for any part of the contract work which may require or involve the employment of laborers or mechanics shall require or permit any such laborer or mechanic in any workweek in which he or she is employed on such work to work in excess of forty hours in such workweek unless such laborer or mechanic receives compensation at a rate not less than one and one-half times the basic rate of pay for all hours worked in excess of forty hours in such workweek.
2. **Violation; liability for unpaid wages; liquidated damages.** In the event of any violation of the clause set forth in paragraph (1.) of this section, the contractor and any subcontractor responsible therefor shall be liable for the unpaid wages. In addition, such contractor and subcontractor shall be liable to the United States (in the case of work done under contract for the District of Columbia or a territory, to such District or to such territory), for liquidated damages. Such liquidated damages shall be computed with respect to each individual laborer or mechanic, including watchmen and guards, employed in violation of the clause set forth in paragraph (1.) of this section, in the sum of $10 for each calendar day on which such individual was required or permitted to work in excess of the standard workweek of forty hours without payment of the overtime wages required by the clause set forth in paragraph (1.) of this section.
3. **Withholding for unpaid wages and liquidated damages.** The FHWA or the contacting agency shall upon its own action or upon written request of an authorized representative of the Department of Labor withhold or cause to be withheld, from any moneys payable on account of work performed by the contractor or subcontractor under any such contract or any other Federal contract with the same prime contractor, or any other federally-assisted contract subject to the Contract Work Hours and Safety Standards Act, which is held by the same prime contractor, such sums as may be determined to be necessary to satisfy any liabilities of such contractor or subcontractor for unpaid wages and liquidated damages as provided in the clause set forth in paragraph (2.) of this section.
4. **Subcontracts.** The contractor or subcontractor shall insert in any subcontracts the clauses set forth in paragraph (1.) through (4.) of this section and also a clause requiring the subcontractors to include these clauses in any lower tier subcontracts. The prime contractor shall be responsible for compliance by any subcontractor or lower tier subcontractor with the clauses set forth in paragraphs (1.) through (4.) of this section.

VI. SUBLETTING OR ASSIGNING THE CONTRACT

This provision is applicable to all Federal-aid construction contracts on the National Highway System.

1. The contractor shall perform with its own organization contract work amounting to not less than 30 percent (or a greater percentage if specified elsewhere in the contract) of the total original contract price, excluding any specialty items designated by the contracting agency. Specialty items may be performed by subcontract and the amount of any such specialty items performed may be deducted from the total original contract price before computing the amount of work required to be performed by the contractor's own organization (23 CFR 635.116).
    a. The term “perform work with its own organization” refers to workers employed or leased by the prime contractor, and equipment owned or rented by the prime contractor, with or without operators. Such term does not include employees or equipment of a subcontractor or lower tier subcontractor, agents of the prime contractor, or any other assignees. The term may include payments for the costs of hiring leased employees from an employee leasing firm meeting all relevant Federal and State regulatory requirements. Leased employees may only be included in this term if the prime contractor meets all of the following conditions:
    (1) the prime contractor maintains control over the supervision of the day-to-day activities of the leased employees;
    (2) the prime contractor remains responsible for the quality of the work of the leased employees;
    (3) the prime contractor retains all power to accept or exclude individual employees from work on the project; and
    (4) the prime contractor remains ultimately responsible for the payment of predetermined minimum wages, the submission of payrolls, statements of compliance and all other Federal regulatory requirements.
    b. "Specialty Items" shall be construed to be limited to work that requires highly specialized knowledge, abilities, or equipment not ordinarily available in the type of contracting organizations qualified and expected to bid or propose on the contract as a whole and in general are to be limited to minor components of the overall contract.
2. The contract amount upon which the requirements set forth in paragraph (1) of Section VI is computed includes the cost of material and manufactured products which are to be purchased or produced by the contractor under the contract provisions.
3. The contractor shall furnish (a) a competent superintendent or supervisor who is employed by the firm, has full authority to direct performance of the work in accordance with the contract requirements, and is in charge of all construction operations (regardless of who performs the work) and (b) such other of its own organizational resources (supervision, management, and engineering services) as the contracting officer determines is necessary to assure the performance of the contract.
4. No portion of the contract shall be sublet, assigned or otherwise disposed of except with the written consent of the contracting officer, or authorized representative, and such consent when given shall not be construed to relieve the contractor of any responsibility for the fulfillment of the contract. Written consent will be given only after the contracting agency has assured that each subcontract is evidenced in writing and that it contains all pertinent provisions and requirements of the prime contract.

5. The 30% self-performance requirement of paragraph (1) is not applicable to design-build contracts; however, contracting agencies may establish their own self-performance requirements.

VII. SAFETY: ACCIDENT PREVENTION

This provision is applicable to all Federal-aid construction contracts and to all related subcontracts.

1. In the performance of this contract the contractor shall comply with all applicable Federal, State, and local laws governing safety, health, and sanitation (23 CFR 635). The contractor shall provide all safeguards, safety devices and protective equipment and take any other needed actions as it determines, or as the contracting officer may determine, to be reasonably necessary to protect the life and health of employees on the job and the safety of the public and to protect property in connection with the performance of the work covered by the contract.
2. It is a condition of this contract, and shall be made a condition of each subcontract, which the contractor enters into pursuant to this contract, that the contractor and any subcontractor shall not permit any employee, in performance of the contract, to work in surroundings or under conditions which are unsanitary, hazardous or dangerous to his/her health or safety, as determined under construction safety and health standards (29 CFR 1926) promulgated by the Secretary of Labor, in accordance with Section 107 of the Contract Work Hours and Safety Standards Act (40 U.S.C. 3704).
3. Pursuant to 29 CFR 1926.3, it is a condition of this contract that the Secretary of Labor or authorized representative thereof, shall have right of entry to any site of contract performance to inspect or investigate the matter of compliance with the construction safety and health standards and to carry out the duties of the Secretary under Section 107 of the Contract Work Hours and Safety Standards Act (40 U.S.C.3704).

VIII. FALSE STATEMENTS CONCERNING HIGHWAY PROJECTS

This provision is applicable to all Federal-aid construction contracts and to all related subcontracts.

In order to assure high quality and durable construction in conformity with approved plans and specifications and a high degree of reliability on statements and representations made by engineers, contractors, suppliers, and workers on Federal-aid highway projects, it is essential that all persons concerned with the project perform their functions as carefully, thoroughly, and honestly as possible. Willful falsification, distortion, or misrepresentation with respect to any facts related to the project is a violation of Federal law. To prevent any misunderstanding regarding the seriousness of these and similar acts, Form FHWA-1022 shall be posted on each Federal-aid highway project (23 CFR 635) in one or more places where it is readily available to all persons concerned with the project:

18 U.S.C. 1020 reads as follows:

"Whoever, being an officer, agent, or employee of the United States, or of any State or Territory, or whoever, whether a person, association, firm, or corporation, knowingly makes any false statement, false representation, or false report as to the character, quality, quantity, or cost of the material used or to be used, or the quantity or quality of the work performed or to be performed, or the cost thereof in connection with the submission of plans, maps, specifications, contracts, or costs of construction on any highway or related project submitted for approval to the Secretary of Transportation; or

Whoever knowingly makes any false statement, false representation, false report or false claim with respect to the character, quality, quantity, or cost of any work performed or to be performed, or materials furnished or to be furnished, in connection with the construction of any highway or related project approved by the Secretary of Transportation; or

Whoever knowingly makes any false statement or false representation as to material fact in any statement, certificate, or report submitted pursuant to provisions of the Federal-aid Roads Act approved July 1, 1916, (39 Stat. 355), as amended and supplemented;

Shall be fined under this title or imprisoned not more than 5 years or both."

IX. IMPLEMENTATION OF CLEAN AIR ACT AND FEDERAL WATER POLLUTION CONTROL ACT

This provision is applicable to all Federal-aid construction contracts and to all related subcontracts.

By submission of this bid/proposal or the execution of this contract, or subcontract, as appropriate, the bidder, proposer, Federal-aid construction contractor, or subcontractor, as appropriate, will be deemed to have stipulated as follows:

1. That any person who is or will be utilized in the performance of this contract is not prohibited from receiving an award due to a violation of Section 508 of the Clean Water Act or Section 306 of the Clean Air Act.
2. That the contractor agrees to include or cause to be included the requirements of paragraph (1) of this Section X in every subcontract, and further agrees to take such action as the contracting agency may direct as a means of enforcing such requirements.

X. CERTIFICATION REGARDING DEBARMENT, SUSPENSION, INELIGIBILITY AND VOLUNTARY EXCLUSION

This provision is applicable to all Federal-aid construction contracts, design-build contracts, subcontracts, lower-tier subcontracts, purchase orders, lease agreements, consultant contracts or any other covered transaction requiring FHWA approval or that is estimated to cost $25,000 or more – as defined in 2 CFR Parts 180 and 1200.

1. **Instructions for Certification – First Tier Participants:**
   a. By signing and submitting this proposal, the prospective first tier participant is providing the certification set out below.
   b. The inability of a person to provide the certification set out below will not necessarily result in denial of participation in this covered transaction. The prospective first tier participant shall submit an explanation of why it cannot provide the certification set out below. The certification or explanation will be considered in connection with the department or agency's determination whether to enter into this transaction. However, failure of the prospective first tier participant to furnish a certification or an explanation shall disqualify such a person from participation in this transaction.
   c. The certification in this clause is a material representation of fact upon which reliance was placed when the contracting agency determined to enter into this transaction. If it is later determined that the prospective participant knowingly rendered an erroneous certification, in addition to other remedies available to the Federal Government, the contracting agency may terminate this transaction for cause of default.
   d. The prospective first tier participant shall provide immediate written notice to the contracting agency to whom this proposal is submitted if any time the prospective first tier participant learns that its certification was erroneous when submitted or has become erroneous by reason of changed circumstances.
   e. The terms "covered transaction," "debarred," "suspended," "ineligible," "participant," "person," "principal," and "voluntarily excluded," as used in this clause, are defined in 2 CFR Parts 180 and 1200. “First Tier Covered Transactions” refers to any covered transaction between a grantee or subgrantee of Federal funds and a participant (such as the prime or general contract). “Lower Tier Covered Transactions” refers to any covered transaction under a First Tier Covered Transaction (such as subcontracts). “First Tier Participant” refers to the participant who

has entered into a covered transaction with a grantee or subgrantee of Federal funds (such as the prime or general contractor). “Lower Tier Participant” refers any participant who has entered into a covered transaction with a First Tier Participant or other Lower Tier Participants (such as subcontractors and suppliers).

f. The prospective first tier participant agrees by submitting this proposal that, should the proposed covered transaction be entered into, it shall not knowingly enter into any lower tier covered transaction with a person who is debarred, suspended, declared ineligible, or voluntarily excluded from participation in this covered transaction, unless authorized by the department or agency entering into this transaction.

g. The prospective first tier participant further agrees by submitting this proposal that it will include the clause titled "Certification Regarding Debarment, Suspension, Ineligibility and Voluntary Exclusion-Lower Tier Covered Transactions," provided by the department or contracting agency, entering into this covered transaction, without modification, in all lower tier covered transactions and in all solicitations for lower tier covered transactions exceeding the $25,000 threshold.

h. A participant in a covered transaction may rely upon a certification of a prospective participant in a lower tier covered transaction that is not debarred, suspended, ineligible, or voluntarily excluded from the covered transaction, unless it knows that the certification is erroneous. A participant is responsible for ensuring that its principals are not suspended, debarred, or otherwise ineligible to participate in covered transactions. To verify the eligibility of its principals, as well as the eligibility of any lower tier prospective participants, each participant may, but is not required to, check the Excluded Parties List System website (https://www.epls.gov/), which is compiled by the General Services Administration.

i. Nothing contained in the foregoing shall be construed to require the establishment of a system of records in order to render in good faith the certification required by this clause. The knowledge and information of the prospective participant is not required to exceed that which is normally possessed by a prudent person in the ordinary course of business dealings.

j. Except for transactions authorized under paragraph (f) of these instructions, if a participant in a covered transaction knowingly enters into a lower tier covered transaction with a person who is suspended, debarred, ineligible, or voluntarily excluded from participation in this transaction, in addition to other remedies available to the Federal Government, the department or agency may terminate this transaction for cause or default.

* * * * *

2. **Certification Regarding Debarment, Suspension, Ineligibility and Voluntary Exclusion – First Tier Participants:**

a. The prospective first tier participant certifies to the best of its knowledge and belief, that it and its principals:

(1) Are not presently debarred, suspended, proposed for debarment, declared ineligible, or voluntarily excluded from participating in covered transactions by any Federal department or agency;

(2) Have not within a three-year period preceding this proposal been convicted of or had a civil judgment rendered against them for commission of fraud or a criminal offense in connection with obtaining, attempting to obtain, or performing a public (Federal, State or local) transaction or contract under a public transaction; violation of Federal or State antitrust statutes or commission of embezzlement, theft, forgery, bribery, falsification or destruction of records, making false statements, or receiving stolen property;

(3) Are not presently indicted for or otherwise criminally or civilly charged by a governmental entity (Federal, State or local) with commission of any of the offenses enumerated in paragraph (a)(2) of this certification; and

(4) Have not within a three-year period preceding this application/proposal had one or more public transactions (Federal, State or local) terminated for cause or default.

b. Where the prospective participant is unable to certify to any of the statements in this certification, such prospective participant shall attach an explanation to this proposal.

2. **Instructions for Certification - Lower Tier Participants:**

(Applicable to all subcontracts, purchase orders and other lower tier transactions requiring prior FHWA approval or estimated to cost $25,000 or more - 2 CFR Parts 180 and 1200)

a. By signing and submitting this proposal, the prospective lower tier is providing the certification set out below.

b. The certification in this clause is a material representation of fact upon which reliance was placed when this transaction was entered into. If it is later determined that the prospective lower tier participant knowingly rendered an erroneous certification, in addition to other remedies available to the Federal Government, the department, or agency with which this transaction originated may pursue available remedies, including suspension and/or debarment.

c. The prospective lower tier participant shall provide immediate written notice to the person to which this proposal is submitted if at any time the prospective lower tier participant learns that its certification was erroneous by reason of changed circumstances.

d. The terms "covered transaction," "debarred," "suspended," "ineligible," "participant," "person," "principal," and "voluntarily excluded," as used in this clause, are defined in 2 CFR Parts 180 and 1200. You may contact the person to which this proposal is submitted for assistance in obtaining a copy of those regulations. “First Tier Covered Transactions” refers to any covered transaction between a grantee or subgrantee of Federal funds and a participant (such as the prime or general contract). “Lower Tier Covered Transactions” refers to any covered transaction under a First Tier Covered Transaction (such as subcontracts). “First Tier Participant” refers to the participant who has entered into a covered transaction with a grantee or subgrantee of Federal funds (such as the prime or general contractor). “Lower Tier Participant” refers any participant who has entered into a covered transaction with a First Tier Participant or other Lower Tier Participants (such as subcontractors and suppliers).

e. The prospective lower tier participant agrees by submitting this proposal that, should the proposed covered transaction be entered into, it shall not knowingly enter into any lower tier covered transaction with a person who is debarred, suspended, declared ineligible, or voluntarily excluded from participation in this covered transaction, unless authorized by the department or agency with which this transaction originated.

f. The prospective lower tier participant further agrees by submitting this proposal that it will include this clause titled "Certification Regarding Debarment, Suspension, Ineligibility and Voluntary Exclusion-Lower Tier Covered Transaction," without modification, in all lower tier covered transactions and in all solicitations for lower tier covered transactions exceeding the $25,000 threshold.

g. A participant in a covered transaction may rely upon a certification of a prospective participant in a lower tier covered transaction that is not debarred, suspended, ineligible, or voluntarily excluded from the covered transaction, unless it knows that the certification is erroneous. A participant is responsible for ensuring that its principals are not suspended, debarred, or otherwise ineligible to participate in covered transactions. To verify the eligibility of its principals, as well as the eligibility of any lower tier prospective participants, each participant may, but is not required to, check the Excluded Parties List System website (https://www.epls.gov/), which is compiled by the General Services Administration.

h. Nothing contained in the foregoing shall be construed to require establishment of a system of records in order to render in good faith the certification required by this clause. The knowledge and information of participant is not required to exceed that which is normally possessed by a prudent person in the ordinary course of business dealings.

i. Except for transactions authorized under paragraph e of these instructions, if a participant in a covered transaction knowingly enters into a lower tier covered transaction with a person who is suspended, debarred, ineligible, or voluntarily excluded from participation in this transaction, in addition to other remedies available to the Federal Government, the department or agency with which this transaction originated may pursue available remedies, including suspension and/or debarment.

* * * * *

Certification Regarding Debarment, Suspension, Ineligibility and Voluntary Exclusion--Lower Tier Participants:

1. The prospective lower tier participant certifies, by submission of this proposal, that neither it nor its principals is presently debarred, suspended, proposed for debarment, declared ineligible, or voluntarily excluded from participating in covered transactions by any Federal department or agency.
2. Where the prospective lower tier participant is unable to certify to any of the statements in this certification, such prospective participant shall attach an explanation to this proposal.

* * * * *

XI. CERTIFICATION REGARDING USE OF CONTRACT FUNDS FOR LOBBYING

This provision is applicable to all Federal-aid construction contracts and to all related subcontracts which exceed $100,000 (49 CFR 20).

1. The prospective participant certifies, by signing and submitting this bid or proposal, to the best of his or her knowledge and belief, that:
   a. No Federal appropriated funds have been paid or will be paid, by or on behalf of the undersigned, to any person for influencing or attempting to influence an officer or employee of any Federal agency, a Member of Congress, an officer or employee of Congress, or an employee of a Member of Congress in connection with the awarding of any Federal contract, the making of any Federal grant, the making of any Federal loan, the entering into of any cooperative agreement, and the extension, continuation, renewal, amendment, or modification of any Federal contract, grant, loan, or cooperative agreement.
   b. If any funds other than Federal appropriated funds have been paid or will be paid to any person for influencing or attempting to influence an officer or employee of any Federal agency, a Member of Congress, an officer or employee of Congress, or an employee of a Member of Congress in connection with this Federal contract, grant, loan, or cooperative agreement, the undersigned shall complete and submit Standard Form-LLL, "Disclosure Form to Report Lobbying," in accordance with its instructions.
2. This certification is a material representation of fact upon which reliance was placed when this transaction was made or entered into. Submission of this certification is a prerequisite for making or entering into this transaction imposed by 31 U.S.C. 1352. Any person who fails to file the required certification shall be subject to a civil penalty of not less than $10,000 and not more than $100,000 for each such failure.
3. The prospective participant also agrees by submitting its bid or proposal that the participant shall require that the language of this certification be included in all lower tier subcontracts, which exceed $100,000 and that all such recipients shall certify and disclose accordingly.

STANDARD SPECIAL PROVISION

ON-THE-JOB TRAINING

(10-16-07) (Rev. 5-21-13) Z-10

Description

The North Carolina Department of Transportation will administer a custom version of the Federal On-the-Job Training (OJT) Program, commonly referred to as the Alternate OJT Program. All contractors (existing and newcomers) will be automatically placed in the Alternate Program. Standard OJT requirements typically associated with individual projects will no longer be applied at the project level. Instead, these requirements will be applicable on an annual basis for each contractor administered by the OJT Program Manager.

On the Job Training shall meet the requirements of 23 CFR 230.107 (b), 23 USC – Section 140, this provision and the On-the-Job Training Program Manual.

The Alternate OJT Program will allow a contractor to train employees on Federal, State and privately funded projects located in North Carolina. However, priority shall be given to training employees on NCDOT Federal-Aid funded projects.

Minorities and Women

Developing, training and upgrading of minorities and women toward journeyman level status is a primary objective of this special training provision. Accordingly, the Contractor shall make every effort to enroll minority and women as trainees to the extent that such persons are available within a reasonable area of recruitment. This training commitment is not intended, and shall not be used, to discriminate against any applicant for training, whether a member of a minority group or not.

Assigning Training Goals

The Department, through the OJT Program Manager, will assign training goals for a calendar year based on the contractors' past three years' activity and the contractors' anticipated upcoming year's activity with the Department. At the beginning of each year, all contractors eligible will be contacted by the Department to determine the number of trainees that will be assigned for the upcoming calendar year. At that time the Contractor shall enter into an agreement with the Department to provide a self-imposed on-the-job training program for the calendar year.
This agreement will include a specific number of annual training goals agreed to by both parties.
The number of training assignments may range from 1 to 15 per contractor per calendar year.
The Contractor shall sign an agreement to fulfill their annual goal for the year. A sample agreement is available at www.ncbowd.com/section/on-the-job-training.

Training Classifications

The Contractor shall provide on-the-job training aimed at developing full journeyman level workers in the construction craft/operator positions. Preference shall be given to providing training in the following skilled work classifications:

Equipment Operators	Office Engineers
Truck Drivers	Estimators
Carpenters	Iron / Reinforcing Steel Workers
Concrete Finishers	Mechanics
Pipe Layers	Welders

The Department has established common training classifications and their respective training requirements that may be used by the contractors. However, the classifications established are not all-inclusive. Where the training is oriented toward construction applications, training will be allowed in lower-level management positions such as office engineers and estimators. Contractors shall submit new classifications for specific job functions that their employees are performing. The Department will review and recommend for acceptance to FHWA the new classifications proposed by contractors, if applicable. New classifications shall meet the following requirements:

Proposed training classifications are reasonable and realistic based on the job skill classification needs, and

The number of training hours specified in the training classification is consistent with common practices and provides enough time for the trainee to obtain journeyman level status.

The Contractor may allow trainees to be trained by a subcontractor provided that the Contractor retains primary responsibility for meeting the training and this provision is made applicable to the subcontract. However, only the Contractor will receive credit towards the annual goal for the trainee.

Where feasible, 25 percent of apprentices or trainees in each occupation shall be in their first year of apprenticeship or training. The number of trainees shall be distributed among the work classifications on the basis of the contractor's needs and the availability of journeymen in the various classifications within a reasonable area of recruitment.

No employee shall be employed as a trainee in any classification in which they have successfully completed a training course leading to journeyman level status or in which they have been employed as a journeyman.

Records and Reports

The Contractor shall maintain enrollment, monthly and completion reports documenting company compliance under these contract documents. These documents and any other information as requested shall be submitted to the OJT Program Manager.

Upon completion and graduation of the program, the Contractor shall provide each trainee with a certification Certificate showing the type and length of training satisfactorily completed.

Trainee Interviews

All trainees enrolled in the program will receive an initial and Trainee/Post graduate interview conducted by the OJT program staff.

Trainee Wages

Contractors shall compensate trainees on a graduating pay scale based upon a percentage of the prevailing minimum journeyman wages (Davis-Bacon Act). Minimum pay shall be as follows:

60 percent	of the journeyman wage for the first half of the training period
75 percent	of the journeyman wage for the third quarter of the training period
90 percent	of the journeyman wage for the last quarter of the training period

In no instance shall a trainee be paid less than the local minimum wage. The Contractor shall adhere to the minimum hourly wage rate that will satisfy both the NC Department of Labor (NCDOL) and the Department.

Achieving or Failing to Meet Training Goals

The Contractor will be credited for each trainee employed by him on the contract work who is currently enrolled or becomes enrolled in an approved program and who receives training for at least 50 percent of the specific program requirement. Trainees will be allowed to be transferred between projects if required by the Contractor's scheduled workload to meet training goals.

If a contractor fails to attain their training assignments for the calendar year, they may be taken off the NCDOT's Bidders List.

Measurement and Payment

No compensation will be made for providing required training in accordance with these contract documents.

This page left intentionally blank.

INSTRUCTIONS TO BIDDERS

PLEASE READ ALL INSTRUCTIONS CAREFULLY
BEFORE PREPARING AND SUBMITTING YOUR BID.

All bids shall be prepared and submitted in accordance with the following requirements. Failure to comply with any requirement shall cause the bid to be considered irregular and shall be grounds for rejection of the bid.

1. The bid sheet furnished by NCDOT with the proposal shall be used and shall not be altered in any manner. The bid shall not be considered complete unless all forms included in this proposal are properly completed and/or executed as instructed. **DO NOT SEPARATE THE BID SHEET FROM THE PROPOSAL!**
2. All entries on the bid sheet shall be written in ink.
3. The Bidder shall submit a unit price for every item on the bid form. The unit prices for the various contract items shall be written in figures.
4. An amount bid shall be entered on the bid sheet for every item. The amount bid for each item shall be determined by multiplying each unit bid by the quantity for that item, and shall be written in figures in the "Amount Bid" column of the sheet.
5. The total amount bid shall be written in figures in the proper place on the bid sheet. The total amount shall be determined by adding the total cost for each item.
6. Changes in any entry shall be made by marking through the entry in ink and making the correct entry adjacent thereto in ink. A representative of the Bidder shall initial the change in ink.
7. The bid shall be properly executed.
8. The bid shall not contain any unauthorized additions, deletions, or conditional bids.
9. The bidder shall not add any provision reserving the right to accept or reject an award, or to enter into a contract pursuant to an award.
10. **The Proposal with the Bid Sheet Still Attached Shall be Placed in a Sealed Envelope and Shall Have Been Delivered to and Received in the Division Engineer's Office Located at 509 Ward Blvd. in Wilson by 2:00 PM on November 26, 2013.**
11. The sealed bid must display the following statement on the front of the sealed envelope:

Quotation For Contract DD00106

12. If delivered by mail or courier, the sealed envelope shall be placed in another sealed envelope and the outer envelope shall be addressed as follows:

J. P. Page, PE, NCDOT
PO Box 3165
Wilson, NC 27895

AWARD OF CONTRACT

The award of the contract, if it be awarded, will be made to the lowest responsible Bidder. The lowest responsible will be notified that his bid has been accepted and that he has been awarded the contract. NCDOT reserves the right to reject all bids.

This page left intentionally blank.

County : Nash

Line #	Item Number	Sec #	Description	Quantity	Unit Cost	Amount
			ROADWAY ITEMS			
0001	0000100000-N	800	MOBILIZATION	Lump Sum	L.S.	
0002	0030000000-N	SP	BRIDGE APPROACH FILL - SUB REGIONAL TIER, STATION ******* 16+90.00	Lump Sum	L.S.	
0003	0030000000-N	SP	BRIDGE APPROACH FILL - SUB REGIONAL TIER, STATION ******* 25+45.00	Lump Sum	L.S.	
0004	0043000000-N	226	GRADING	Lump Sum	L.S.	
0005	0156000000-E	250	REMOVAL OF EXISTING ASPHALT PAVEMENT	223 SY		
0006	0196000000-E	270	GEOTEXTILE FOR SOIL STABILIZA-TION	200 SY		
0007	0318000000-E	300	FOUNDATION CONDITIONING MATE-RIAL, MINOR STRUCTURES	20 TON		
0008	0320000000-E	300	FOUNDATION CONDITIONING GEO-TEXTILE	40 SY		
0009	0384000000-E	310	30" RC PIPE CULVERTS, CLASS III	12 LF		
0010	0448200000-E	310	15" RC PIPE CULVERTS, CLASS IV	28 LF		
0011	1220000000-E	545	INCIDENTAL STONE BASE	100 TON		
0012	1330000000-E	607	INCIDENTAL MILLING	447 SY		
0013	1489000000-E	610	ASPHALT CONC BASE COURSE, TYPE B25.0B	720 TON		
0014	1525000000-E	610	ASPHALT CONC SURFACE COURSE, TYPE SF9.5A	800 TON		
0015	1575000000-E	620	ASPHALT BINDER FOR PLANT MIX	90 TON		
0016	2253000000-E	840	PIPE COLLARS	1 CY		
0017	2286000000-N	840	MASONRY DRAINAGE STRUCTURES	3 EA		

This page left intentionally blank.

County : Nash

Line #	Item Number	Sec #	Description	Quantity	Unit Cost	Amount
0018	2367000000-N	840	FRAME WITH TWO GRATES, STD 840.29	3 EA		
0019	2556000000-E	846	SHOULDER BERM GUTTER	119 LF		
0020	3030000000-E	862	STEEL BM GUARDRAIL	137.5 LF		
0021	3045000000-E	862	STEEL BM GUARDRAIL, SHOP CURVED	37.5 LF		
0022	3215000000-N	862	GUARDRAIL ANCHOR UNITS, TYPE III	8 EA		
0023	3270000000-N	SP	GUARDRAIL ANCHOR UNITS, TYPE 350	8 EA		
0024	3649000000-E	876	RIP RAP, CLASS B	10 TON		
0025	3659000000-N	SP	PREFORMED SCOUR HOLES WITH LEVEL SPREADER APRON	1 EA		
0026	4710000000-E	1205	THERMOPLASTIC PAVEMENT MARKING LINES (24", 120 MILS)	40 LF		
0027	4810000000-E	1205	PAINT PAVEMENT MARKING LINES (4")	5,368 LF		
0028	6006000000-E	1610	STONE FOR EROSION CONTROL, CLASS A	315 TON		
0029	6009000000-E	1610	STONE FOR EROSION CONTROL, CLASS B	105 TON		
0030	6012000000-E	1610	SEDIMENT CONTROL STONE	225 TON		
0031	6024000000-E	1622	TEMPORARY SLOPE DRAINS	200 LF		
0032	6029000000-E	SP	SAFETY FENCE	800 LF		
0033	6030000000-E	1630	SILT EXCAVATION	180 CY		
0034	6037000000-E	SP	COIR FIBER MAT	200 SY		
0035	6042000000-E	1632	1/4" HARDWARE CLOTH	825 LF		

This page left intentionally blank.

County : Nash

Line #	Item Number	Sec #	Description	Quantity	Unit Cost	Amount
0036	6070000000-N	1639	SPECIAL STILLING BASINS	4 EA		
0037	6071030000-E	1640	COIR FIBER BAFFLE	65 LF		
0038	6071050000-E	SP	**" SKIMMER 1 1/2	2 EA		
0039	6117000000-N	SP	RESPONSE FOR EROSION CONTROL	26 EA		
0040	6123000000-E	1670	REFORESTATION	0.2 ACR		
0041	6133000000-N	SP	GENERIC EROSION CONTROL ITEM EROSION CONTROL	Lump Sum	L.S.	
0042	8035000000-N	402	REMOVAL OF EXISTING STRUCTURE AT STATION ********** 16+90.00	Lump Sum	L.S.	
0043	8035000000-N	402	REMOVAL OF EXISTING STRUCTURE AT STATION ********** 25+45.00	Lump Sum	L.S.	
0044	8121000000-N	412	UNCLASSIFIED STRUCTURE EXCAVA-TION AT STATION ******** 16+90.00	Lump Sum	L.S.	
0045	8121000000-N	412	UNCLASSIFIED STRUCTURE EXCAVA-TION AT STATION ******** 25+45.00	Lump Sum	L.S.	
0046	8182000000-E	420	CLASS A CONCRETE (BRIDGE)	123 CY		
0047	8210000000-N	422	BRIDGE APPROACH SLABS, STATION ********** 16+90.00	Lump Sum	L.S.	
0048	8210000000-N	422	BRIDGE APPROACH SLABS, STATION ********** 25+45.00	Lump Sum	L.S.	
0049	8217000000-E	425	REINFORCING STEEL (BRIDGE)	17,724 LB		
0050	8364000000-E	450	HP12X53 STEEL PILES	745 LF		
0051	8384200000-E	450	HP14X73 GALVANIZED STEEL PILES	1,040 LF		
0052	8391000000-N	450	STEEL PILE POINTS	38 EA		

This page left intentionally blank.

County : Nash

Line #	Item Number	Sec #	Description	Quantity	Unit Cost	Amount
0053	8392500000-E	450	PREDRILLING FOR PILES	460 LF		
0054	8393000000-N	450	PILE REDRIVES	4 EA		
0055	8505000000-E	460	VERTICAL CONCRETE BARRIER RAIL	420.75 LF		
0056	8608000000-E	876	RIP RAP CLASS II (2'-0" THICK)	460 TON		
0057	8622000000-E	876	GEOTEXTILE FOR DRAINAGE	1,592 SY		
0058	8657000000-N	430	ELASTOMERIC BEARINGS	Lump Sum	L.S.	
0059	8762000000-E	430	3'-0" X 1'-9" PRESTRESSED CONC CORED SLABS	2,440 LF		

********* BEGIN SCHEDULE AA *********
********* (3 ALTERNATES) *********

0060 **AA1**	0536000000-E	310	***" HDPE PIPE CULVERTS 15	36 LF		

***** OR *****

0061 **AA2**	0542000000-E	310	**" PVC PIPE CULVERTS 15	36 LF		

***** OR *****

0062 **AA3**	0582000000-E	310	15" CS PIPE CULVERTS, 0.064" THICK	36 LF		

******* END SCHEDULE AA *******

This page left intentionally blank.

Contract No. _____ Rev. 4-19-11

County _____

EXECUTION OF BID
NON-COLLUSION AFFIDAVIT, DEBARMENT CERTIFICATION AND GIFT BAN CERTIFICATION

CORPORATION

The person executing the bid, on behalf of the Bidder, being duly sworn, solemnly swears (or affirms) that neither he, nor any official, agent or employee of the bidder has entered into any agreement, participated in any collusion, or otherwise taken any action which is in restraint of free competitive bidding in connection with any bid or contract, that the bidder has not been convicted of violating *N.C.G.S. § 133-24* within the last three years, and that the Bidder intends to do the work with its own bonafide employees or subcontractors and is not bidding for the benefit of another contractor.

In addition, execution of this bid in the proper manner also constitutes the Bidder's certification of status under penalty of perjury under the laws of the United States in accordance with the Debarment Certification attached, provided that the Debarment Certification also includes any required statements concerning exceptions that are applicable.

N.C.G.S. § 133-32 and Executive Order 24 prohibit the offer to, or acceptance by, any State Employee of any gift from anyone with a contract with the State, or from any person seeking to do business with the State. By execution of any response in this procurement, you attest, for your entire organization and its employees or agents, that you are not aware that any such gift has been offered, accepted, or promised by any employees of your organization.

SIGNATURE OF CONTRACTOR

_____
Full name of Corporation

_____
Address as Prequalified

Attest _____ By _____

Secretary/Assistant Secretary
Select appropriate title

President/Vice President/Assistant Vice President
Select appropriate title

_____
Print or type Signer's name

_____
Print or type Signer's name

CORPORATE SEAL

AFFIDAVIT MUST BE NOTARIZED

Subscribed and sworn to before me this the

_____ day of _____ 20__.

NOTARY SEAL

_____
Signature of Notary Public

of _____County

State of _____

My Commission Expires:_____

Contract No. _____ Rev. 4-19-11

County _____

EXECUTION OF BID
NON-COLLUSION AFFIDAVIT, DEBARMENT CERTIFICATION AND GIFT BAN CERTIFICATION

PARTNERSHIP

The person executing the bid, on behalf of the Bidder, being duly sworn, solemnly swears (or affirms) that neither he, nor any official, agent or employee of the bidder has entered into any agreement, participated in any collusion, or otherwise taken any action which is in restraint of free competitive bidding in connection with any bid or contract, that the bidder has not been convicted of violating *N.C.G.S. § 133-24* within the last three years, and that the Bidder intends to do the work with its own bonafide employees or subcontractors and is not bidding for the benefit of another contractor.

In addition, execution of this bid in the proper manner also constitutes the Bidder's certification of status under penalty of perjury under the laws of the United States in accordance with the Debarment Certification attached, provided that the Debarment Certification also includes any required statements concerning exceptions that are applicable.

N.C.G.S. § 133-32 and Executive Order 24 prohibit the offer to, or acceptance by, any State Employee of any gift from anyone with a contract with the State, or from any person seeking to do business with the State. By execution of any response in this procurement, you attest, for your entire organization and its employees or agents, that you are not aware that any such gift has been offered, accepted, or promised by any employees of your organization.

SIGNATURE OF CONTRACTOR

_____
Full Name of Partnership

_____
Address as Prequalified

_____ By _____
Signature of Witness Signature of Partner

_____ _____
Print or type Signer's name Print or type Signer's name

AFFIDAVIT MUST BE NOTARIZED

Subscribed and sworn to before me this the **NOTARY SEAL**

_____ day of _____ 20__.

_____
Signature of Notary Public

of _____County

State of _____

My Commission Expires:_____

Contract No. _____ Rev. 4-19-11

County _____

EXECUTION OF BID
NON-COLLUSION AFFIDAVIT, DEBARMENT CERTIFICATION AND GIFT BAN CERTIFICATION

LIMITED LIABILITY COMPANY

The person executing the bid, on behalf of the Bidder, being duly sworn, solemnly swears (or affirms) that neither he, nor any official, agent or employee of the bidder has entered into any agreement, participated in any collusion, or otherwise taken any action which is in restraint of free competitive bidding in connection with any bid or contract, that the bidder has not been convicted of violating *N.C.G.S. § 133-24* within the last three years, and that the Bidder intends to do the work with its own bonafide employees or subcontractors and is not bidding for the benefit of another contractor.

In addition, execution of this bid in the proper manner also constitutes the Bidder's certification of status under penalty of perjury under the laws of the United States in accordance with the Debarment Certification attached, provided that the Debarment Certification also includes any required statements concerning exceptions that are applicable.

N.C.G.S. § 133-32 and Executive Order 24 prohibit the offer to, or acceptance by, any State Employee of any gift from anyone with a contract with the State, or from any person seeking to do business with the State. By execution of any response in this procurement, you attest, for your entire organization and its employees or agents, that you are not aware that any such gift has been offered, accepted, or promised by any employees of your organization.

SIGNATURE OF CONTRACTOR

_____
Full Name of Firm

_____
Address as Prequalified

_____ Signature of Witness	_____ Signature of Member/Manager/Authorized Agent *Select appropriate title*
_____ Print or type Signer's name	_____ Print or type Signer's Name

AFFIDAVIT MUST BE NOTARIZED

Subscribed and sworn to before me this the

_____ day of _____ 20__.

_____
Signature of Notary Public

of _____County

State of _____

My Commission Expires:_____

NOTARY SEAL

Contract No. _____ Rev. 4-19-11

County _____

EXECUTION OF BID
NON-COLLUSION AFFIDAVIT, DEBARMENT CERTIFICATION AND GIFT BAN CERTIFICATION
JOINT VENTURE (2) or (3)

The person executing the bid, on behalf of the Bidder, being duly sworn, solemnly swears (or affirms) that neither he, nor any official, agent or employee of the bidder has entered into any agreement, participated in any collusion, or otherwise taken any action which is in restraint of free competitive bidding in connection with any bid or contract, that the bidder has not been convicted of violating *N.C.G.S. § 133-24* within the last three years, and that the Bidder intends to do the work with its own bonafide employees or subcontractors and is not bidding for the benefit of another contractor.

In addition, execution of this bid in the proper manner also constitutes the Bidder's certification of status under penalty of perjury under the laws of the United States in accordance with the Debarment Certification attached, provided that the Debarment Certification also includes any required statements concerning exceptions that are applicable.

N.C.G.S. § 133-32 and Executive Order 24 prohibit the offer to, or acceptance by, any State Employee of any gift from anyone with a contract with the State, or from any person seeking to do business with the State. By execution of any response in this procurement, you attest, for your entire organization and its employees or agents, that you are not aware that any such gift has been offered, accepted, or promised by any employees of your organization.

SIGNATURE OF CONTRACTOR

Instructions: **2 Joint Venturers** Fill in lines (1), (2) and (3) and execute. **3 Joint Venturers** Fill in lines (1), (2), (3) and (4) and execute. On Line (1), fill in the name of the Joint Venture Company. On Line (2), fill in the name of one of the joint venturers and execute below in the appropriate manner. On Line (3), print or type the name of the other joint venturer and execute below in the appropriate manner. On Line (4), fill in the name of the third joint venturer, if applicable and execute below in the appropriate manner.

(1) _____
Name of Joint Venture

(2) _____
Name of Contractor

_____
Address as Prequalified

_____	By	_____
Signature of Witness or Attest		Signature of Contractor
_____		_____
Print or type Signer's name		Print or type Signer's name

If Corporation, affix Corporate Seal and

(3) _____
Name of Contractor

_____
Address as Prequalified

_____	By	_____
Signature of Witness or Attest		Signature of Contractor
_____		_____
Print or type Signer's name		Print or type Signer's name

If Corporation, affix Corporate Seal and

(4) _____
Name of Contractor *(for 3 Joint Venture only)*

_____
Address as Prequalified

_____	By	_____
Signature of Witness or Attest		Signature of Contractor
_____		_____
Print or type Signer's name		Print or type Signer's name

If Corporation, affix Corporate Seal

NOTARY SEAL
Affidavit must be notarized for Line (2)
Subscribed and sworn to before me this
_____day of_____ 20___
_____
Signature of Notary Public
of _____County
State of _____
My Commission Expires:_____

NOTARY SEAL
Affidavit must be notarized for Line (3)
Subscribed and sworn to before me this
_____day of _____ 20___
_____
Signature of Notary Public
of _____County
State of _____
My Commission Expires:_____

NOTARY SEAL
Affidavit must be notarized for Line (4)
Subscribed and sworn to before me this
____day of _____ 20_____
_____
Signature of Notary Public
of _____County
State of _____
My Commission Expires:_____

Contract No. _____ Rev. 4-19-11

County _____

EXECUTION OF BID
NON-COLLUSION AFFIDAVIT, DEBARMENT CERTIFICATION AND GIFT BAN CERTIFICATION

INDIVIDUAL DOING BUSINESS UNDER A FIRM NAME

The person executing the bid, on behalf of the Bidder, being duly sworn, solemnly swears (or affirms) that neither he, nor any official, agent or employee of the bidder has entered into any agreement, participated in any collusion, or otherwise taken any action which is in restraint of free competitive bidding in connection with any bid or contract, that the bidder has not been convicted of violating *N.C.G.S. § 133-24* within the last three years, and that the Bidder intends to do the work with its own bonafide employees or subcontractors and is not bidding for the benefit of another contractor.

In addition, execution of this bid in the proper manner also constitutes the Bidder's certification of status under penalty of perjury under the laws of the United States in accordance with the Debarment Certification attached, provided that the Debarment Certification also includes any required statements concerning exceptions that are applicable.

N.C.G.S. § 133-32 and Executive Order 24 prohibit the offer to, or acceptance by, any State Employee of any gift from anyone with a contract with the State, or from any person seeking to do business with the State. By execution of any response in this procurement, you attest, for your entire organization and its employees or agents, that you are not aware that any such gift has been offered, accepted, or promised by any employees of your organization.

SIGNATURE OF CONTRACTOR

Name of Contractor _____
Individual name

Trading and doing business as _____
Full name of Firm

_____
Address as Prequalified

_____ _____
Signature of Witness Signature of Contractor, Individually

_____ _____
Print or type Signer's name Print or type Signer's name

AFFIDAVIT MUST BE NOTARIZED

Subscribed and sworn to before me this the

_____ day of _____ 20__.

NOTARY SEAL

_____
Signature of Notary Public

of _____County

State of _____

My Commission Expires:_____

Contract No. _____ Rev. 4-19-11

County _____

EXECUTION OF BID

NON-COLLUSION AFFIDAVIT, DEBARMENT CERTIFICATION AND GIFT BAN CERTIFICATION

INDIVIDUAL DOING BUSINESS IN HIS OWN NAME

The person executing the bid, on behalf of the Bidder, being duly sworn, solemnly swears (or affirms) that neither he, nor any official, agent or employee of the bidder has entered into any agreement, participated in any collusion, or otherwise taken any action which is in restraint of free competitive bidding in connection with any bid or contract, that the bidder has not been convicted of violating *N.C.G.S. § 133-24* within the last three years, and that the Bidder intends to do the work with its own bonafide employees or subcontractors and is not bidding for the benefit of another contractor.

In addition, execution of this bid in the proper manner also constitutes the Bidder's certification of status under penalty of perjury under the laws of the United States in accordance with the Debarment Certification attached, provided that the Debarment Certification also includes any required statements concerning exceptions that are applicable.

N.C.G.S. § 133-32 and Executive Order 24 prohibit the offer to, or acceptance by, any State Employee of any gift from anyone with a contract with the State, or from any person seeking to do business with the State. By execution of any response in this procurement, you attest, for your entire organization and its employees or agents, that you are not aware that any such gift has been offered, accepted, or promised by any employees of your organization.

SIGNATURE OF CONTRACTOR

Name of Contractor _____

Print or type Individual name

_____

Address as Prequalified

_____

Signature of Contractor, Individually

_____

Print or type Signer's Name

_____

Signature of Witness

_____

Print or type Signer's name

AFFIDAVIT MUST BE NOTARIZED

Subscribed and sworn to before me this the

NOTARY SEAL

_____ day of _____ 20__.

_____

Signature of Notary Public

of _____County

State of _____

My Commission Expires:_____

DEBARMENT CERTIFICATION

Conditions for certification:

1. The prequalified bidder shall provide immediate written notice to the Municipality if at any time the bidder learns that his certification was erroneous when he submitted his debarment certification or explanation filed with the Municipality, or has become erroneous because of changed circumstances.

2. The terms *covered transaction, debarred, suspended, ineligible, lower tier covered transaction, participant, person, primary covered transaction, principal, proposal,* and *voluntarily excluded,* as used in this provision, have the meanings set out in the Definitions and Coverage sections of the rules implementing Executive Order 12549. A copy of the Federal Rules requiring this certification and detailing the definitions and coverages may be obtained from the Municipality project representative.

3. The prequalified bidder agrees by submitting this form, that he will not knowingly enter into any lower tier covered transaction with a person who is debarred, suspended, declared ineligible, or voluntarily excluded from participation in Municipal contracts, unless authorized by the Municipality.

4. For Federal Aid projects, the prequalified bidder further agrees that by submitting this form he will include the Federal-Aid Provision titled *Required Contract Provisions Federal-Aid Construction Contract (Form FHWA PR* 1273) provided by the Municipality, without subsequent modification, in all lower tier covered transactions.

5. The prequalified bidder may rely upon a certification of a participant in a lower tier covered transaction that he is not debarred, suspended, ineligible, or voluntarily excluded from the covered transaction, unless he knows that the certification is erroneous. The bidder may decide the method and frequency by which he will determine the eligibility of his subcontractors.

6. Nothing contained in the foregoing shall be construed to require establishment of a system of records in order to render in good faith the certification required by this provision. The knowledge and information of a participant is not required to exceed that which is normally possessed by a prudent person in the ordinary course of business dealings.

7. Except as authorized in paragraph 6 herein, the Municipality may terminate any contract if the bidder knowingly enters into a lower tier covered transaction with a person who is suspended, debarred, ineligible, or voluntarily excluded from participation in this transaction, in addition to other remedies available by the Federal Government.

Contract No. _____ Rev. 4-19-11

County _____

DEBARMENT CERTIFICATION

The prequalified bidder certifies to the best of his knowledge and belief, that he and his principals:

a. Are not presently debarred, suspended, proposed for debarment, declared ineligible, or voluntarily excluded from covered transactions by any Federal department or agency;

b. Have not within a three-year period preceding this proposal been convicted of or had a civil judgment rendered against them for commission of fraud or a criminal offense in connection with obtaining, attempting to obtain, or performing a public (Federal, State or local) transaction or contract under a public transaction; violation of Federal or State antitrust statutes or commission of embezzlement, theft, forgery, bribery, falsification or destruction of records; making false statements; or receiving stolen property;

c. Are not presently indicted for or otherwise criminally or civilly charged by a governmental entity (Federal, State or local) with commission of any of the offenses enumerated in paragraph b. of this certification; and

d. Have not within a three-year period preceding this proposal had one or more public transactions (Federal, State or local) terminated for cause or default.

e. Will submit a revised Debarment Certification immediately if his status changes and will show in his bid proposal an explanation for the change in status.

If the prequalified bidder cannot certify that he is not debarred, he shall provide an explanation with this submittal. An explanation will not necessarily result in denial of participation in a contract.

Failure to submit a non-collusion affidavit and debarment certification will result in the prequalified bidder's bid being considered non-responsive.

☐ Check here if an explanation is attached to this certification.

Contract No: DD00106

County: Nash

ACCEPTED BY THE
DEPARTMENT OF TRANSPORTATION

_____

Division Four Project Manager

_____

Date

This page left intentionally blank.

LISTING OF DBE SUBCONTRACTORS

Sheet _____ of _____

FIRM NAME AND ADDRESS	ITEM NO.	ITEM DESCRIPTION	* AGREED UPON UNIT PRICE	** DOLLAR VOLUME OF ITEM

* The Dollar Volume shown in this column shall be the Actual Price Agreed Upon by the Prime Contractor and the DBE subcontractor, and these prices will be used to determine the percentage of the DBE participation in the contract.

** Dollar Volume of DBE Subcontractor $ _____

Percentage of Total Contract Bid Price _____ %

** Must have entry even if figure to be entered is zero.

This form must be completed in order for the Bid to be considered responsive and be publicly read.
Bidders with no MBE and/or WBE participation must so indicate this on the form by entering the word or number *zero*.

This page left intentionally blank.