CONTRACT # DD00076 WBS # 17BP.4.R.42

EXISTING BRIDGE No. 194
24'-0" CLEAR ROADWAY
SPANS: 1 @ 17'-6"; 7 @ 17'-0"; 1 @ 17'-9"
REINF. CONC. FLOOR ON TIMBER JOISTS
END BENT 1:
REINF. CONC. ABUTMENT
END BENT 2 & BENTS:
TIMBER CAP/ TIMBER POSTS & SILLS

TBM: BM#1
NAIL IN BASE OF 15" SWEET GUM
62.42' RIGHT OF -L- STA. 12+93.38
ELEV. 172.65

EXISTING UTILITIES TO BE RELOCATED BY OTHERS.

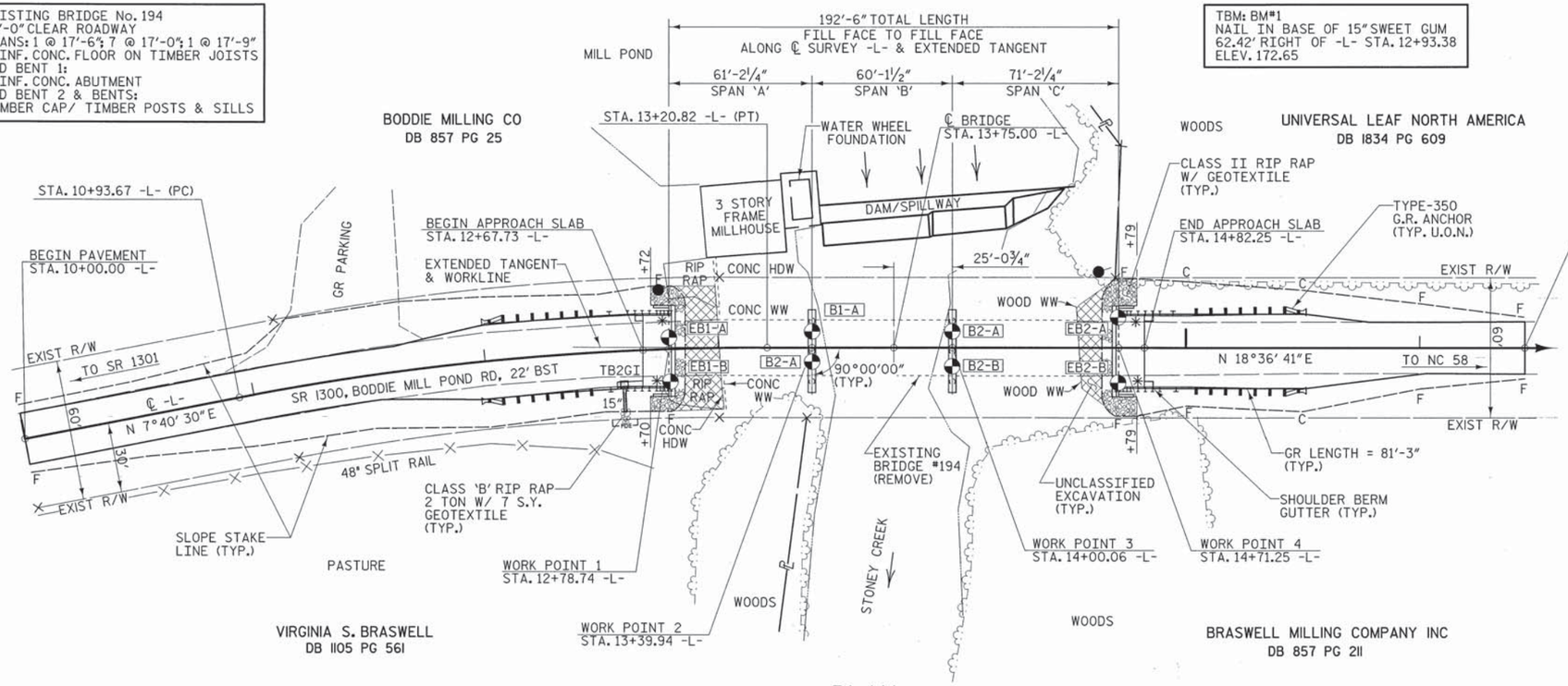

PLAN

SCALE: 1" = 30'

RIP RAP CLASS II (2'-0" THICK)

END BENT No. 1	60 TONS
END BENT No. 2	60 TONS
TOTAL	120 TONS

GEOTEXTILE FOR DRAINAGE

END BENT No. 1	70 SQ. YARDS
END BENT No. 2	70 SQ. YARDS
TOTAL	140 SQ. YARDS

PI = 11+65.00
EL = 178.70'
VC = 220'
K = 50
D.S. = 35 mph
(-)4.0807% △ (+)0.3000%

PI = 15+05.00
EL = 179.72'
VC = 262'
K = 65
D.S. = 40 mph
(+)0.3000% △ (+)4.3572%

GRADE DATA
-L- (SR 1300)

DENOTES GEO-TECH BORE HOLE LOCATIONS.

* DENOTES TYPE III GUARDRAIL CONNECTION REQ'D. SEE "GUARDRAIL ANCHORAGE FOR VERTICAL CONCRETE BARRIER RAIL" SHEET.

NOTE: GUARDRAIL LENGTHS AS SHOWN INCLUDE ANCHOR UNITS.

U.O.N. - UNLESS OTHERWISE NOTED

FOR PAVEMENT LAYOUT & R/W LAYOUT SEE "ROADWAY DETAILS" SHEET.

HYDROGRAPHIC DATA:

DESIGN DISCHARGE -	5600 CFS
FREQUENCY OF DESIGN FLOOD -	25 YEAR
DESIGN HIGH WATER ELEVATION -	172.4
DRAINAGE AREA -	47.3 SQ. MI.
BASE DISCHARGE (Q 100) -	8486 CFS
BASE HIGH WATER ELEVATION -	174.97

OVERTOPPING FLOOD DATA:

OVERTOPPING DISCHARGE -	16885 CFS
FREQUENCY OF OVERTOPPING FLOOD -	500 YEAR (+)
OVERTOPPING FLOOD ELEVATION -	179.5

I HEREBY CERTIFY THESE PLANS ARE THE AS-BUILT PLANS

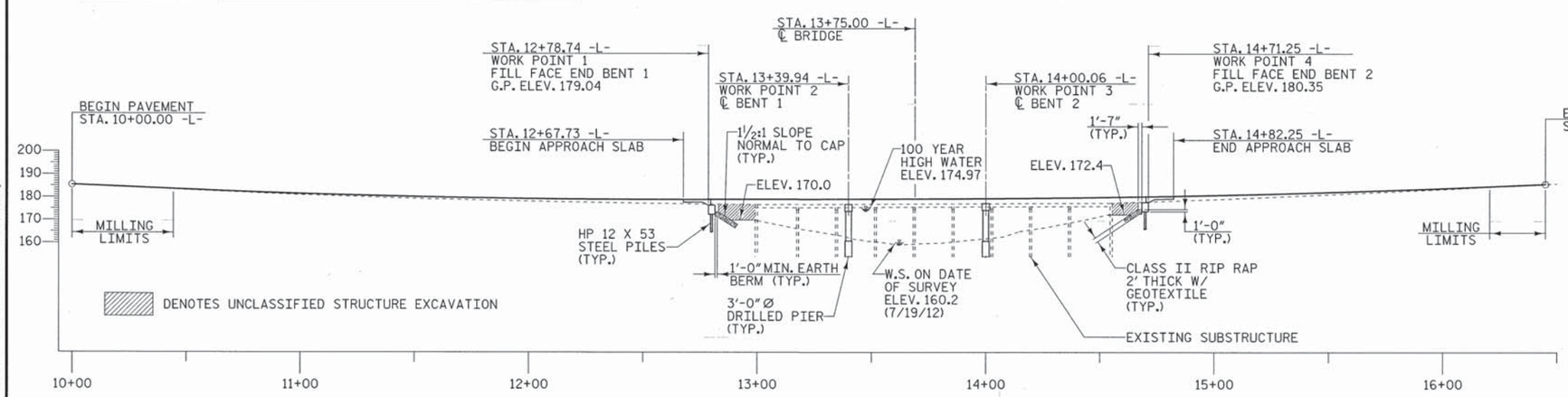

PROFILE ALONG ℄ SURVEY

SCALE: 1" = 30'

PROJECT NO. 17BP.4.R.42
NASH COUNTY
STATION: 13+75.00 -L-

REPLACES BRIDGE NO. 194

STATE OF NORTH CAROLINA
DEPARTMENT OF TRANSPORTATION
RALEIGH

BRIDGE ON SR 1300 OVER STONEY CREEK BETWEEN SR 1301 & NC 58

30'-6" CLEAR ROADWAY - 90° SKEW

NORTH CAROLINA PROFESSIONAL ENGINEER SEAL 19661 KEVIN AUSTIN 7/11/13

PLANS PREPARED BY:
MULKEY ENGINEERS & CONSULTANTS
PO Box 33127 Raleigh, N.C. 27636
(919) 851-1912
(919) 851-1918 (FAX)
WWW.MULKEYINC.COM
NC LICENSE NO. C-1021

REVISIONS								SHEET NO.
NO.	BY:	DATE:	NO.	BY:	DATE:			1
1			3					TOTAL SHEETS
2			4					35

DRAWN BY : W. B. ALLEN DATE : 11/12
CHECKED BY : W. A. DAVIS DATE : 5/13

7/8/2013 68843 AM R:\Structures\Main PM_SD_GD_DG.dgn

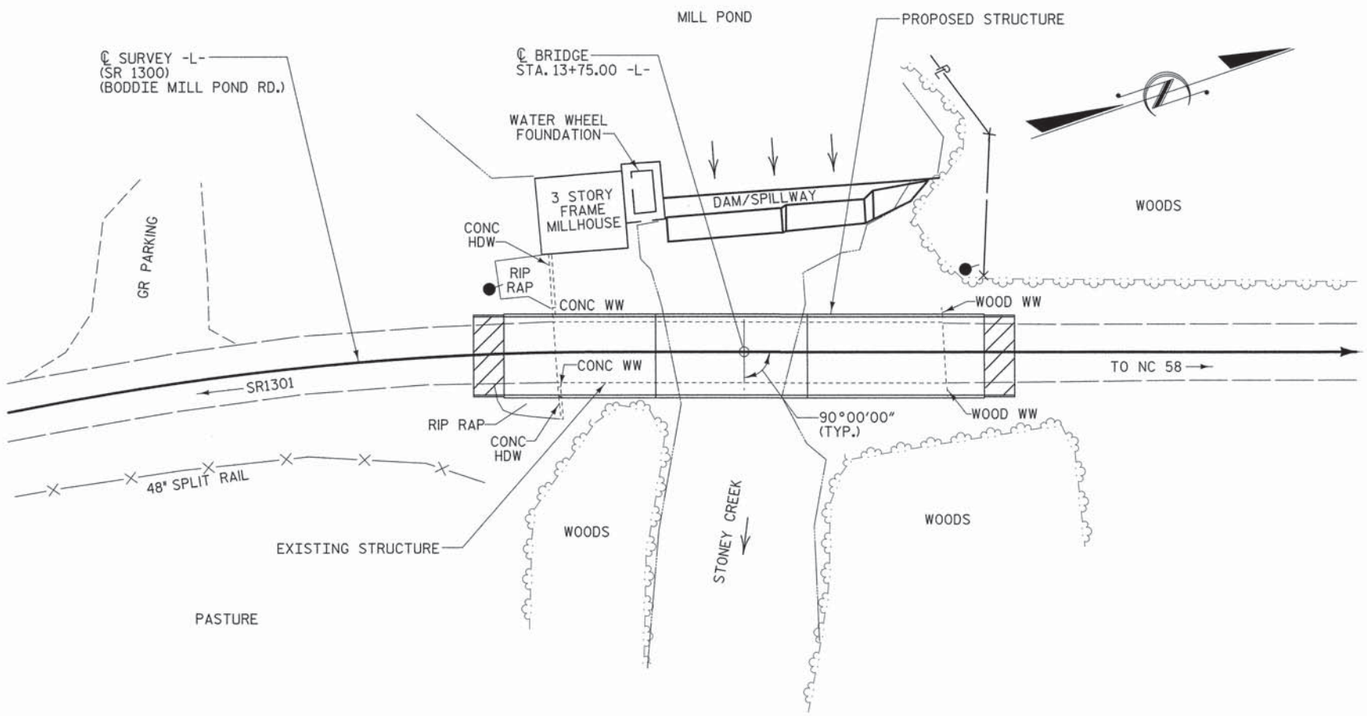

LOCATION SKETCH

NOTES

ASSUMED LIVE LOAD = HL-93 OR ALTERNATE LOADING.

THIS BRIDGE HAS BEEN DESIGNED IN ACCORDANCE WITH THE AASHTO LRFD BRIDGE DESIGN SPECIFICATIONS.

THIS BRIDGE IS LOCATED IN SEISMIC ZONE 1.

FOR OTHER DESIGN DATA AND GENERAL NOTES, SEE SHEET SN.

FOR EROSION CONTROL MEASURES SEE EROSION CONTROL PLANS.

REMOVAL OF THE EXISTING BRIDGE SHALL BE PERFORMED SO AS NOT TO ALLOW DEBRIS TO FALL INTO THE WATER. THE CONTRACTOR SHALL REMOVE THE BRIDGE AND SUBMIT PLANS FOR THE DEMOLITION IN ACCORDANCE WITH ARTICLE 402-2 OF THE STANDARD SPECIFICATIONS.

THE MATERIAL SHOWN ON SHEET 1 IN THE CROSS-HATCHED AREA SHALL BE EXCAVATED FOR A DISTANCE OF 25 FT. EACH SIDE OF CENTERLINE ROADWAY AS DIRECTED BY THE ENGINEER. THIS WORK WILL BE PAID FOR AT THE CONTRACT LUMP SUM PRICE FOR UNCLASSIFIED STRUCTURE EXCAVATION.

THE SUBSTRUCTURE OF THE EXISTING BRIDGE INDICATED ON THE PLANS IS FROM THE BEST INFORMATION AVAILABLE. SINCE THIS INFORMATION IS SHOWN FOR THE CONVENIENCE OF THE CONTRACTOR, THE CONTRACTOR SHALL HAVE NO CLAIM WHATSOEVER AGAINST THE DEPARTMENT OF TRANSPORTATION FOR ANY DELAYS OR ADDITIONAL COST INCURRED BASED ON DIFFERENCES BETWEEN THE EXISTING BRIDGE SUBSTRUCTURE SHOWN ON THE PLANS AND THE ACTUAL CONDITIONS AT THE PROJECT SITE.

THIS STRUCTURE HAS BEEN DESIGNED IN ACCORDANCE WITH HEC 18, "EVALUATING SCOUR AT BRIDGES", MAY 2001.

FOR DRILLED PIERS, SEE SECTION 411 OF THE STANDARD SPECIFICATIONS.

DRILLED PIERS AT BENT NO. 1 AND BENT NO. 2 ARE DESIGNED FOR A FACTORED RESISTANCE OF 425 TONS PER PIER. CHECK FIELD CONDITIONS FOR THE REQUIRED TIP RESISTANCE OF 40 TSF AT BENT NO. 1. AND 65 TSF AT BENT NO. 2.

PERMANENT STEEL CASINGS MAY BE REQUIRED FOR DRILLED PIERS AT BENT NO. 1 AND BENT NO. 2. IF REQUIRED, DO NOT EXTEND PERMANENT STEEL CASINGS BELOW ELEVATION 158.6 FT. AT BENT NO. 1 AND 157.8 FT. AT BENT NO. 2 WITHOUT PRIOR APPROVAL FROM THE ENGINEER. THE ENGINEER WILL DETERMINE THE NEED FOR PERMANENT CASINGS.

INSTALL DRILLED PIERS AT BENT NO. 1 AND BENT NO. 2 THAT EXTEND TO AN ELEVATION NO HIGHER THAN 151.5 FT. AT BENT NO.1 AND 150 FT. AT BENT NO. 2 AND SATISFY THE REQUIRED TIP RESISTANCE.

THE SCOUR CRITICAL ELEVATION FOR BENT NO. 1 IS ELEVATION 156.6 FT. (L) AND 158 FT. (R&C). SCOUR CRTICAL ELEVATIONS ARE USED TO MONITOR POSSIBLE SCOUR PROBLEMS DURING THE LIFE OF THE STRUCTURE.

THE SCOUR CRITICAL ELEVATION FOR BENT NO. 2 IS ELEVATION 155 FT. SCOUR CRTICAL ELEVATIONS ARE USED TO MONITOR POSSIBLE SCOUR PROBLEMS DURING THE LIFE OF THE STRUCTURE.

SPT MAY BE REQUIRED FOR DRILLED PIERS. THE ENGINEER WILL DETERMINE THE NEED FOR SPT. FOR SPT TESTING, SEE SECTION 411 OF THE STANDARD SPECIFICATIONS.

CSL TUBES ARE REQUIRED AND CSL TESTING MAY BE REQUIRED FOR DRILLED PIERS AT BENT NO. 1 AND BENT NO. 2. FOR CSL TESTING, SEE SECTION 411 OF THE STANDARD SPECIFICATIONS.

SID INSPECTIONS MAY BE REQUIRED FOR DRILLED PIERS. THE ENGINEER WILL DETERMINE THE NEED FOR SID INSPECTIONS. FOR SID INSPECTIONS, SEE SECTION 411 OF THE STANDARD SPECIFICATIONS.

FOR PILES, SEE SECTION 450 OF THE STANDARD SPECIFICATIONS.

PILES AT END BENT NO. 1 ARE DESIGNED FOR A FACTORED RESISTANCE OF 74 TONS PER PILE.

PILES AT END BENT NO. 2 ARE DESIGNED FOR A FACTORED RESISTANCE OF 81 TONS PER PILE.

CONCRETE OR GROUT IS REQUIRED TO FILL HOLES FOR PILE EXCAVTION AT END BENT NO. 1 AND END BENT NO. 2.

DO NOT DRIVE PILES AT END BENT NO. 1 AND END BENT NO. 2 AFTER PLACING PILES IN HOLES.

PILE EXCAVTION IS REQUIRED TO INSTALL PILES AT END BENT NO. 1 AND END BENT NO. 2. EXCAVATE HOLES AT PILE LOCATIONS TO ELEVATION AT LEAST 10 FEET BELOW BOTTOM OF CAP AND HAVE A MINIMUM PENETRATION OF 4 FEET INTO ROCK. FOR PILE EXCAVATION, SEE SECTION 450 OF THE STANDARD SPECIFICATIONS.

ADT = 400 FOR YEAR 2003.

ROADWAY APPROACH EMBANKMENT SHALL BE WIDENED AS NECESSARY FOR GUARDRAIL INSTALLATION.

FOR SUBMITTAL OF WORKING DRAWINGS, SEE SPECIAL PROVISIONS.

FOR FALSEWORK AND FORMWORK, SEE SPECIAL PROVISIONS.

FOR CRANE SAFETY, SEE SPECIAL PROVISIONS.

FOR GROUT FOR STRUCTURES, SEE SPECIAL PROVISIONS.

NO DECK DRAINS REQUIRED.

ASPHALT WEARING SURFACE IS INCLUDED IN ROADWAY QUANTITY ON ROADWAY PLANS.

TOTAL BILL OF MATERIAL

	REMOVAL OF EXISTING STRUCTURE	PILE EXCAVATION IN SOIL	PILE EXCAVATION NOT IN SOIL	3'-0" DIA. DRILLED PIERS IN SOIL	3'-0" DIA. DRILLED PIERS NOT IN SOIL	PERMANENT STEEL CASING FOR 3'-0" DIA. DRILLED PIERS	SID INSPECTION	SPT TESTING	CSL TESTING	UNCLASSIFIED STRUCTURE EXCAVATION	CLASS A CONCRETE	BRIDGE APPROACH SLABS
	LUMP SUM	LIN. FT.	LIN. FT.	LIN. FT.	LIN. FT.	LIN. FT.	EACH	EACH	EACH	LUMP SUM	CU. YARDS	LUMP SUM
SUPERSTRUCTURE	LUMP SUM											LUMP SUM
END BENT 1		95	28							LUMP SUM	21.6	
BENT 1				6.5	25.0	10.2					15.8	
BENT 2				11.0	25.0	15.6					15.7	
END BENT 2		80	28							LUMP SUM	21.6	
TOTAL	LUMP SUM	175	56	17.5	50.0	25.8	1	1	1	LUMP SUM	74.7	LUMP SUM

TOTAL BILL OF MATERIAL

	REINFORCING STEEL	SPIRAL COLUMN REINFORCING STEEL	HP 12 X 53 STEEL PILES		2 BAR METAL BARRIER RAIL	1'-2" X 2'-9½" CONCRETE PARAPET	RIP RAP CLASS II (2'-0" THICK)	GEOTEXTILE FOR DRAINAGE	ELASTOMERIC BEARINGS	3'-0" X 2'-0" PRESTRESSED CONCRETE CORED SLABS	
	LBS.	LBS.	NO.	LIN. FT.	LIN. FT.	LIN. FT.	TONS	SQ. YARDS	LUMP SUM	NO.	LIN. FT.
SUPERSTRUCTURE					365.5	380.0			LUMP SUM	33	2090.00
END BENT 1	2636		7	123			60	70			
BENT 1	8773	523									
BENT 2	9052	566									
END BENT 2	2636		7	123			60	70			
TOTAL	23097	1089	14	246	365.5	380.0	120	140	LUMP SUM	33	2090.00

DRAWN BY : Z. H. BROWN DATE : 5/13
CHECKED BY : W. A. DAVIS DATE : 5/13

PROJECT NO. 17BP.4.R.42
NASH COUNTY
STATION: 13+75.00 -L-

NORTH CAROLINA PROFESSIONAL SEAL 19661 ENGINEER KEVIN AUSTIN 6/13/13

PLANS PREPARED BY:
MULKEY ENGINEERS & CONSULTANTS
PO Box 33127
RALEIGH, N.C. 27636
(919) 851-1912
(919) 851-1918 (FAX)
WWW.MULKEYINC.COM
NC LICENSE NO. C-1021

STATE OF NORTH CAROLINA
DEPARTMENT OF TRANSPORTATION
RALEIGH

LOCATION SKETCH & TOTAL BILL OF MATERIAL

30'-6" CLEAR ROADWAY - 90° SKEW

REVISIONS						SHEET NO.
NO.	BY:	DATE:	NO.	BY:	DATE:	2
1			3			TOTAL SHEETS
2			4			35

6/12/2013 8:53:44 AM G:\Project\2009\2009253.52\CLIENT\Structures\Nash 194.SD.GD.02.dgn

LOAD AND RESISTANCE FACTOR RATING (LRFD) SUMMARY FOR PRESTRESSED CONCRETE GIRDERS

LEVEL		VEHICLE	WEIGHT (W) (TONS)	CONTROLLING LOAD RATING	MINIMUM RATING FACTORS (RF)	TONS = W X RF	STRENGTH I LIMIT STATE											SERVICE III LIMIT STATE						COMMENT NUMBER
								MOMENT					SHEAR						MOMENT					
							LIVELOAD FACTORS	DISTRIBUTION FACTORS (DF)	RATING FACTOR	SPAN	GIRDER LOCATION	DISTANCE FROM LEFT END OF SPAN (ft)	DISTRIBUTION FACTORS (DF)	RATING FACTOR	SPAN	GIRDER LOCATION	DISTANCE FROM LEFT END OF SPAN (ft)	LIVELOAD FACTORS	DISTRIBUTION FACTORS (DF)	RATING FACTOR	SPAN	GIRDER LOCATION	DISTANCE FROM LEFT END OF SPAN (ft)	
DESIGN LOAD RATING		HL-93(Inv)	N/A	**1**	1.33	--	1.75	0.275	1.33	60'	EL	29.5	0.52	**1.33**	60'	EL	**5.9**	0.80	0.275	1.37	60'	EL	29.5	
		HL-93(Opr)	N/A	--	1.725	--	1.35	0.275	1.73	60'	EL	29.5	0.52	1.72	60'	EL	5.9	N/A	--	--	--	--	--	
		HS-20(Inv)	36.000	**2**	1.601	57.643	1.75	0.275	1.69	60'	EL	29.5	0.52	**1.6**	60'	EL	**5.9**	0.80	0.275	1.74	60'	EL	29.5	
		HS-20(Opr)	36.000	--	2.076	74.723	1.35	0.275	2.19	60'	EL	29.5	0.52	2.08	60'	EL	5.9	N/A	--	--	--	--	--	
LEGAL LOAD RATING	SV	SNSH	13.500	--	3.745	50.557	1.4	0.275	4.55	60'	EL	29.5	0.52	4.63	60'	EL	5.9	0.80	0.275	3.74	60'	EL	29.5	
		SNGARBS2	20.000	--	2.867	57.338	1.4	0.275	3.48	60'	EL	29.5	0.52	3.33	60'	EL	5.9	0.80	0.275	2.87	60'	EL	29.5	
		SNAGRIS2	22.000	--	2.748	60.46	1.4	0.275	3.34	60'	EL	29.5	0.52	3.11	60'	EL	5.9	0.80	0.275	2.75	60'	EL	29.5	
		SNCOTTS3	27.250	--	1.866	50.841	1.4	0.275	2.27	60'	EL	29.5	0.52	2.31	60'	EL	5.9	0.80	0.275	1.87	60'	EL	29.5	
		SNAGGRS4	34.925	--	1.588	55.465	1.4	0.275	1.93	60'	EL	29.5	0.52	1.95	60'	EL	5.9	0.80	0.275	1.59	60'	EL	29.5	
		SNS5A	35.550	--	1.551	55.139	1.4	0.275	1.89	60'	EL	29.5	0.52	1.99	60'	EL	5.9	0.80	0.275	1.55	60'	EL	29.5	
		SNS6A	39.950	--	1.435	57.347	1.4	0.275	1.74	60'	EL	29.5	0.52	1.83	60'	EL	5.9	0.80	0.275	1.44	60'	EL	29.5	
		SNS7B	42.000	--	1.367	57.434	1.4	0.275	1.66	60'	EL	29.5	0.52	1.81	60'	EL	5.9	0.80	0.275	1.37	60'	EL	29.5	
	TTST	TNAGRIT3	33.000	--	1.754	57.887	1.4	0.275	2.13	60'	EL	29.5	0.52	2.17	60'	EL	5.9	0.80	0.275	1.75	60'	EL	29.5	
		TNT4A	33.075	--	1.765	58.389	1.4	0.275	2.15	60'	EL	29.5	0.52	2.1	60'	EL	5.9	0.80	0.275	1.77	60'	EL	29.5	
		TNT6A	41.600	--	1.456	60.551	1.4	0.275	1.77	60'	EL	29.5	0.52	1.96	60'	EL	5.9	0.80	0.275	1.46	60'	EL	29.5	
		TNT7A	42.000	--	1.469	61.714	1.4	0.275	1.79	60'	EL	29.5	0.52	1.88	60'	EL	5.9	0.80	0.275	1.47	60'	EL	29.5	
		TNT7B	42.000	--	1.535	64.463	1.4	0.275	1.87	60'	EL	29.5	0.52	1.76	60'	EL	5.9	0.80	0.275	1.53	60'	EL	29.5	
		TNAGRIT4	43.000	--	1.45	62.329	1.4	0.275	1.76	60'	EL	29.5	0.52	1.7	60'	EL	5.9	0.80	0.275	1.45	60'	EL	29.5	
		TNAGT5A	45.000	--	1.361	61.247	1.4	0.275	1.65	60'	EL	29.5	0.52	1.71	60'	EL	5.9	0.80	0.275	1.36	60'	EL	29.5	
		TNAGT5B	45.000	**3**	1.34	60.282	1.4	0.275	1.63	60'	EL	29.5	0.52	1.61	60'	EL	5.9	0.80	0.275	**1.34**	60'	EL	**29.5**	

LOAD FACTORS:

DESIGN LOAD RATING FACTORS	LIMIT STATE	γ_{DC}	γ_{DW}
	STRENGTH I	1.25	1.50
	SERVICE III	1.00	1.00

NOTES:

MINIMUM RATING FACTORS ARE BASED ON THE STRENGTH I AND SERVICE III LIMIT STATES.

ALLOWABLE STRESSES FOR SERVICE III LIMIT STATE ARE AS REQUIRED FOR DESIGN.

COMMENTS:

1.
2.
3.
4.

(#) CONTROLLING LOAD RATING

(1) DESIGN LOAD RATING (HL-93)

(2) DESIGN LOAD RATING (HS-20)

(3) LEGAL LOAD RATING **

** SEE CHART FOR VEHICLE TYPE

GIRDER LOCATION

I - INTERIOR GIRDER
EL - EXTERIOR LEFT GIRDER
ER - EXTERIOR RIGHT GIRDER

LRFR SUMMARY

FOR SPAN 'A' & 'B'

PROJECT NO. 17BP.4.R.42

NASH COUNTY

STATION: 13+75.00 -L-

PLANS PREPARED BY:

MULKEY ENGINEERS & CONSULTANTS
PO Box 33127
Raleigh, N.C. 27636
(919) 851-1912
(919) 851-1918 (FAX)
WWW.MULKEYINC.COM
NC LICENSE NO. C-1021

THIS STANDARD DRAWING REVIEWED & ADOPTED FOR USE AT THE REFERENCED LOCATION BY THE UNDERSIGNED:

NORTH CAROLINA PROFESSIONAL SEAL 19661 ENGINEER KEVIN AUSTIN

6/13/13

STATE OF NORTH CAROLINA
DEPARTMENT OF TRANSPORTATION
RALEIGH

STANDARD

LRFR SUMMARY FOR 60' CORED SLAB UNIT 90° SKEW

(NON-INTERSTATE TRAFFIC)

REVISIONS						SHEET NO.
NO.	BY:	DATE:	NO.	BY:	DATE:	3
1			3			TOTAL SHEETS
2			4			35

ASSEMBLED BY : Z. H. BROWN DATE : 11/20/12
CHECKED BY : W. A. DAVIS DATE : 5/13/13

DRAWN BY : CVC 6/10
CHECKED BY : DNS 6/10

STD. NO. 24LRFR1_90S_60L

6/12/2013 02:05:41 PM G:\Project\2009\200923.52\CLIENT\Structures\Nash (94.50) LRFR_06.dgn

LOAD AND RESISTANCE FACTOR RATING (LRFD) SUMMARY FOR PRESTRESSED CONCRETE GIRDERS

LEVEL		VEHICLE	WEIGHT (W) (TONS)	CONTROLLING LOAD RATING	MINIMUM RATING FACTORS (RF)	TONS = W X RF	STRENGTH I LIMIT STATE											SERVICE III LIMIT STATE						COMMENT NUMBER
							LIVELOAD FACTORS	MOMENT					SHEAR					LIVELOAD FACTORS	MOMENT					
								DISTRIBUTION FACTORS (DF)	RATING FACTOR	SPAN	GIRDER LOCATION	DISTANCE FROM LEFT END OF SPAN (ft)	DISTRIBUTION FACTORS (DF)	RATING FACTOR	SPAN	GIRDER LOCATION	DISTANCE FROM LEFT END OF SPAN (ft)		DISTRIBUTION FACTORS (DF)	RATING FACTOR	SPAN	GIRDER LOCATION	DISTANCE FROM LEFT END OF SPAN (ft)	
DESIGN LOAD RATING		HL-93(Inv)	N/A	**1**	1.006	--	1.75	0.273	1.03	70'	EL	34.5	0.507	1.32	70'	EL	6.9	0.80	0.273	**1.01**	70'	EL	**34.5**	
		HL-93(Opr)	N/A	--	1.341	--	1.35	0.273	1.34	70'	EL	34.5	0.507	1.72	70'	EL	6.9	N/A	--	--	--	--	--	
		HS-20(Inv)	36.000	**2**	1.306	47.02	1.75	0.273	1.34	70'	EL	34.5	0.507	1.65	70'	EL	6.9	0.80	0.273	**1.31**	70'	EL	**34.5**	
		HS-20(Opr)	36.000	--	1.74	62.64	1.35	0.273	1.74	70'	EL	34.5	0.507	2.14	70'	EL	6.9	N/A	--	--	--	--	--	
LEGAL LOAD RATING	SV	SNSH	13.500	--	2.917	39.379	1.4	0.273	3.75	70'	EL	34.5	0.507	4.87	70'	EL	6.9	0.80	0.273	2.92	70'	EL	34.5	
		SNGARBS2	20.000	--	2.187	43.741	1.4	0.273	2.81	70'	EL	34.5	0.507	3.47	70'	EL	6.9	0.80	0.273	2.19	70'	EL	34.5	
		SNAGRIS2	22.000	--	2.077	45.69	1.4	0.273	2.67	70'	EL	34.5	0.507	3.23	70'	EL	6.9	0.80	0.273	2.08	70'	EL	34.5	
		SNCOTTS3	27.250	--	1.452	39.565	1.4	0.273	1.87	70'	EL	34.5	0.507	2.43	70'	EL	6.9	0.80	0.273	1.45	70'	EL	34.5	
		SNAGGRS4	34.925	--	1.218	42.554	1.4	0.273	1.57	70'	EL	34.5	0.507	2.03	70'	EL	6.9	0.80	0.273	1.22	70'	EL	34.5	
		SNS5A	35.550	--	1.191	42.346	1.4	0.273	1.53	70'	EL	34.5	0.507	2.06	70'	EL	6.9	0.80	0.273	1.19	70'	EL	34.5	
		SNS6A	39.950	--	1.095	43.747	1.4	0.273	1.41	70'	EL	34.5	0.507	1.88	70'	EL	6.9	0.80	0.273	1.10	70'	EL	34.5	
		SNS7B	42.000	--	1.043	43.801	1.4	0.273	1.34	70'	EL	34.5	0.507	1.85	70'	EL	6.9	0.80	0.273	1.04	70'	EL	34.5	
	TTST	TNAGRIT3	33.000	--	1.336	44.087	1.4	0.273	1.72	70'	EL	34.5	0.507	2.23	70'	EL	6.9	0.80	0.273	1.34	70'	EL	34.5	
		TNT4A	33.075	--	1.342	44.401	1.4	0.273	1.72	70'	EL	34.5	0.507	2.17	70'	EL	6.9	0.80	0.273	1.34	70'	EL	34.5	
		TNT6A	41.600	--	1.1	45.746	1.4	0.273	1.41	70'	EL	34.5	0.507	1.98	70'	EL	6.9	0.80	0.273	1.10	70'	EL	34.5	
		TNT7A	42.000	--	1.106	46.462	1.4	0.273	1.42	70'	EL	34.5	0.507	1.94	70'	EL	6.9	0.80	0.273	1.11	70'	EL	34.5	
		TNT7B	42.000	--	1.147	48.18	1.4	0.273	1.47	70'	EL	34.5	0.507	1.8	70'	EL	6.9	0.80	0.273	1.15	70'	EL	34.5	
		TNAGRIT4	43.000	--	1.089	46.838	1.4	0.273	1.4	70'	EL	34.5	0.507	1.74	70'	EL	6.9	0.80	0.273	1.09	70'	EL	34.5	
		TNAGT5A	45.000	--	1.026	46.175	1.4	0.273	1.32	70'	EL	34.5	0.507	1.74	70'	EL	6.9	0.80	0.273	1.03	70'	EL	34.5	
		TNAGT5B	45.000	**3**	1.013	45.579	1.4	0.273	1.3	70'	EL	34.5	0.507	1.66	70'	EL	6.9	0.80	0.273	**1.01**	70'	EL	**34.5**	

LOAD FACTORS:

DESIGN LOAD RATING FACTORS	LIMIT STATE	γ_{DC}	γ_{DW}
	STRENGTH I	1.25	1.50
	SERVICE III	1.00	1.00

NOTES:

MINIMUM RATING FACTORS ARE BASED ON THE STRENGTH I AND SERVICE III LIMIT STATES.

ALLOWABLE STRESSES FOR SERVICE III LIMIT STATE ARE AS REQUIRED FOR DESIGN.

COMMENTS:

1.
2.
3.
4.

(#) CONTROLLING LOAD RATING

(1) DESIGN LOAD RATING (HL-93)
(2) DESIGN LOAD RATING (HS-20)
(3) LEGAL LOAD RATING **

** SEE CHART FOR VEHICLE TYPE

GIRDER LOCATION

I - INTERIOR GIRDER
EL - EXTERIOR LEFT GIRDER
ER - EXTERIOR RIGHT GIRDER

LRFR SUMMARY

FOR SPAN 'C'

PROJECT NO. 17BP.4.R.42

NASH COUNTY

STATION: 13+75.00 -L-

PLANS PREPARED BY:

MULKEY ENGINEERS & CONSULTANTS
PO Box 33127
Raleigh, N.C. 27636
(919) 851-1912
(919) 851-1918 (FAX)
WWW.MULKEYINC.COM
NC LICENSE NO. C-1031

THIS STANDARD DRAWING REVIEWED & ADOPTED FOR USE AT THE REFERENCED LOCATION BY THE UNDERSIGNED:

NORTH CAROLINA PROFESSIONAL ENGINEER SEAL 19661 L. KEVIN AUSTIN

6/13/13

STATE OF NORTH CAROLINA
DEPARTMENT OF TRANSPORTATION
RALEIGH

STANDARD
LRFR SUMMARY FOR
70' CORED SLAB UNIT
90° SKEW
(NON-INTERSTATE TRAFFIC)

REVISIONS						SHEET NO.
NO.	BY:	DATE:	NO.	BY:	DATE:	4
1			3			TOTAL SHEETS
2			4			35

STD. NO. 24LRFR1_90S_70L

ASSEMBLED BY :	Z. H. BROWN	DATE :	11/20/12
CHECKED BY :	W. A. DAVIS	DATE :	5/13/13
DRAWN BY : CVC	6/10		
CHECKED BY : DNS	6/10		

6/12/2013 2:56:09 PM G:\Project\2009\000923.52\CLIENT\Structures\Nash (94-50_)LRFR_02.dgn

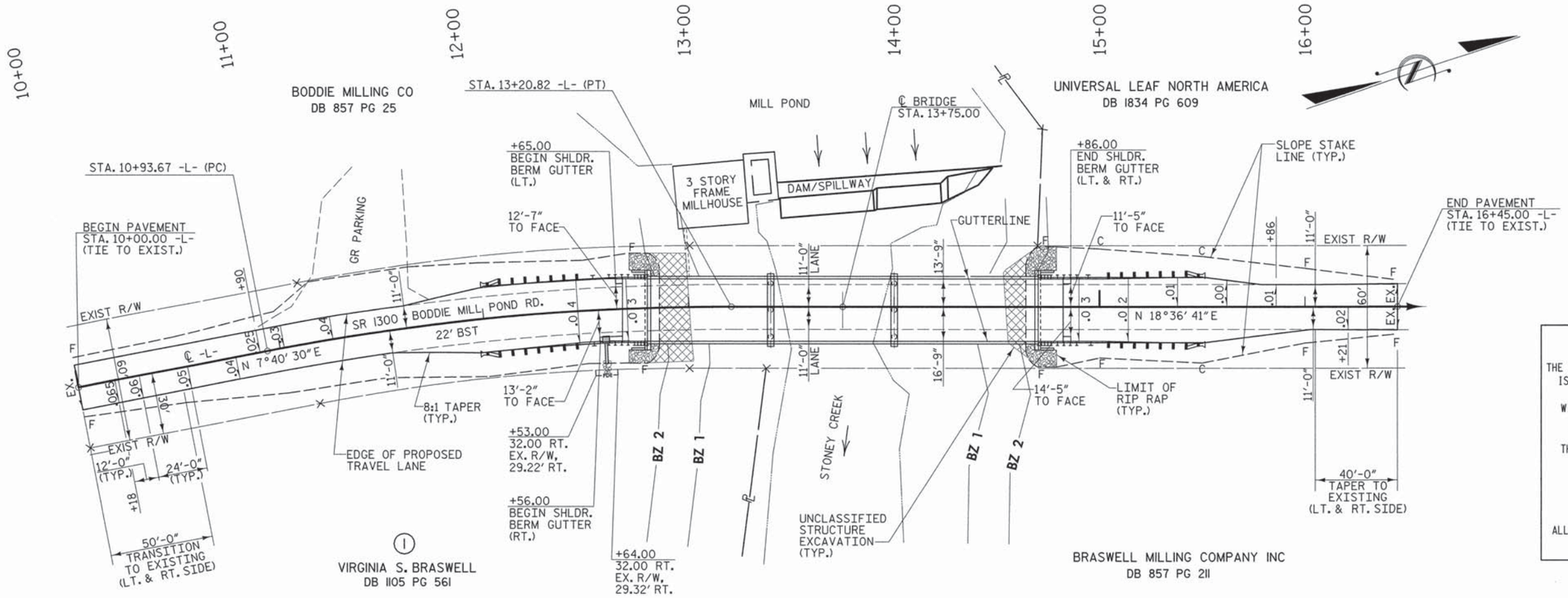

PAVEMENT LAYOUT DETAIL

SCALE: 1" = 30'

HORIZONTAL CURVE DATA

PI STA. 12+07.59
Δ = 10° 56' 11.5" (RT)
D = 4° 48' 53.2"
L = 227.15'
T = 113.92'
R = 1190.00'

DATUM DESCRIPTION

THE LOCALIZED COORDINATE SYSTEM DEVELOPED FOR THIS PROJECT IS BASED ON THE STATE PLANE COORDINATES ESTABLISHED BY NCDOT FOR MONUMENT "2"
WITH NAD 83/NSRS 2007 STATE PLANE GRID COORDINATES OF
NORTHING: 821620.83(ft) EASTING: 2284394.59(ft)
ELEVATION: 176.57(ft)
THE AVERAGE COMBINED GRID FACTOR USED ON THIS PROJECT (GROUND TO GRID) IS: 0.999955537

LOCALIZED HORIZONTAL GROUND DISTANCE FROM MONUMENT "2" TO -L- STATION 10+00.00 IS S 13° 35' 15.2" W 264.09'

ALL LINEAR DIMENSIONS ARE LOCALIZED HORIZONTAL DISTANCES
VERTICAL DATUM USED IS NAVD 88

RIGHT OF WAY AREA DATA

PARCEL NO.	PROPERTY OWNERS NAMES	TOTAL AREA	AREA TAKEN	AREA REMAINING RT.	AREA REMAINING LT.	CONST. EASE.	PERM. DRAIN. EASE.	TEMP. DRAIN. EASE.
1	VIRGINIA S. BRASWELL	17.16 AC					30 SF	

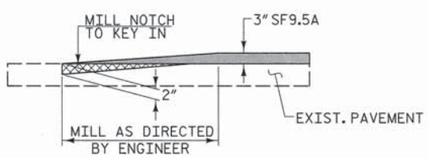

MILLING DETAIL

MILL EXISTING PAVEMENT AT THE FOLLOWING LOCATIONS
-L- STA. 10+00.00 TO STA. 10+45+/-
-L- STA. 16+21+/- TO STA. 16+45.00

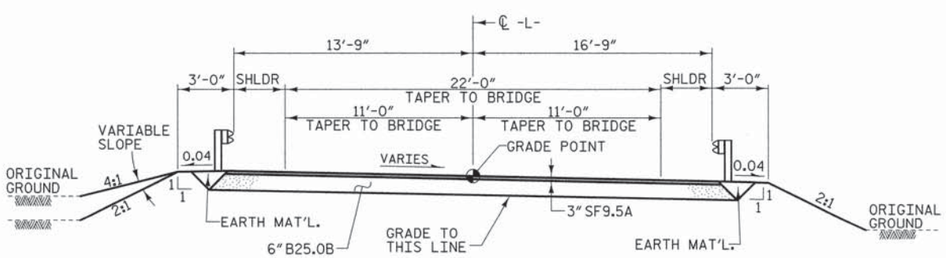

FULL DEPTH PAVEMENT

FROM -L- STA. 11+50 TO BEGIN BRIDGE
FROM END BRIDGE TO -L- STA. 15+50

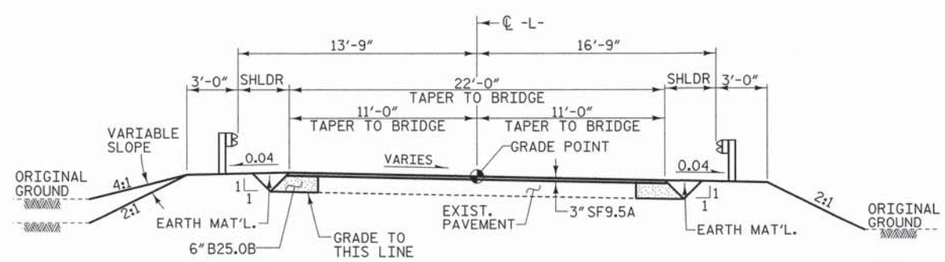

WIDENING PAVEMENT

FROM -L- STA. 10+00.00 TO -L- STA. 11+50
FROM -L- STA. 15+50 TO -L- STA. 16+45.00

TYPICAL ROADWAY SECTION

WITHIN CONSTRUCTION LIMITS

PROJECT NO. 17BP.4.R.42
NASH COUNTY
STATION: 13+75.00 -L-

REPLACES BRIDGE NO. 194

STATE OF NORTH CAROLINA
DEPARTMENT OF TRANSPORTATION
RALEIGH

ROADWAY DETAILS

30'-6" CLEAR ROADWAY - 90° SKEW

NORTH CAROLINA PROFESSIONAL SEAL ENGINEER 19661 KEVIN AUSTIN 6/12/13

PLANS PREPARED BY:
MULKEY ENGINEERS & CONSULTANTS
PO Box 33127
Raleigh, N.C. 27636
(919) 851-1912
(919) 851-1918 (FAX)
WWW.MULKEYINC.COM
NC LICENSE NO. C-1021

REVISIONS								SHEET NO.
NO.	BY:	DATE:	NO.	BY:	DATE:			5
1			3					TOTAL SHEETS
2			4					35

DRAWN BY : W. B. ALLEN DATE : 11/12
CHECKED BY : W. A. DAVIS DATE : 5/13

6/12/2013 10:06:28 AM R:\Structures\Nash 194_SD_GD_03.dgn

0 2.5 5	PROJ. REFERENCE NO.	SHEET NO.
	17BP.4.R.42	6

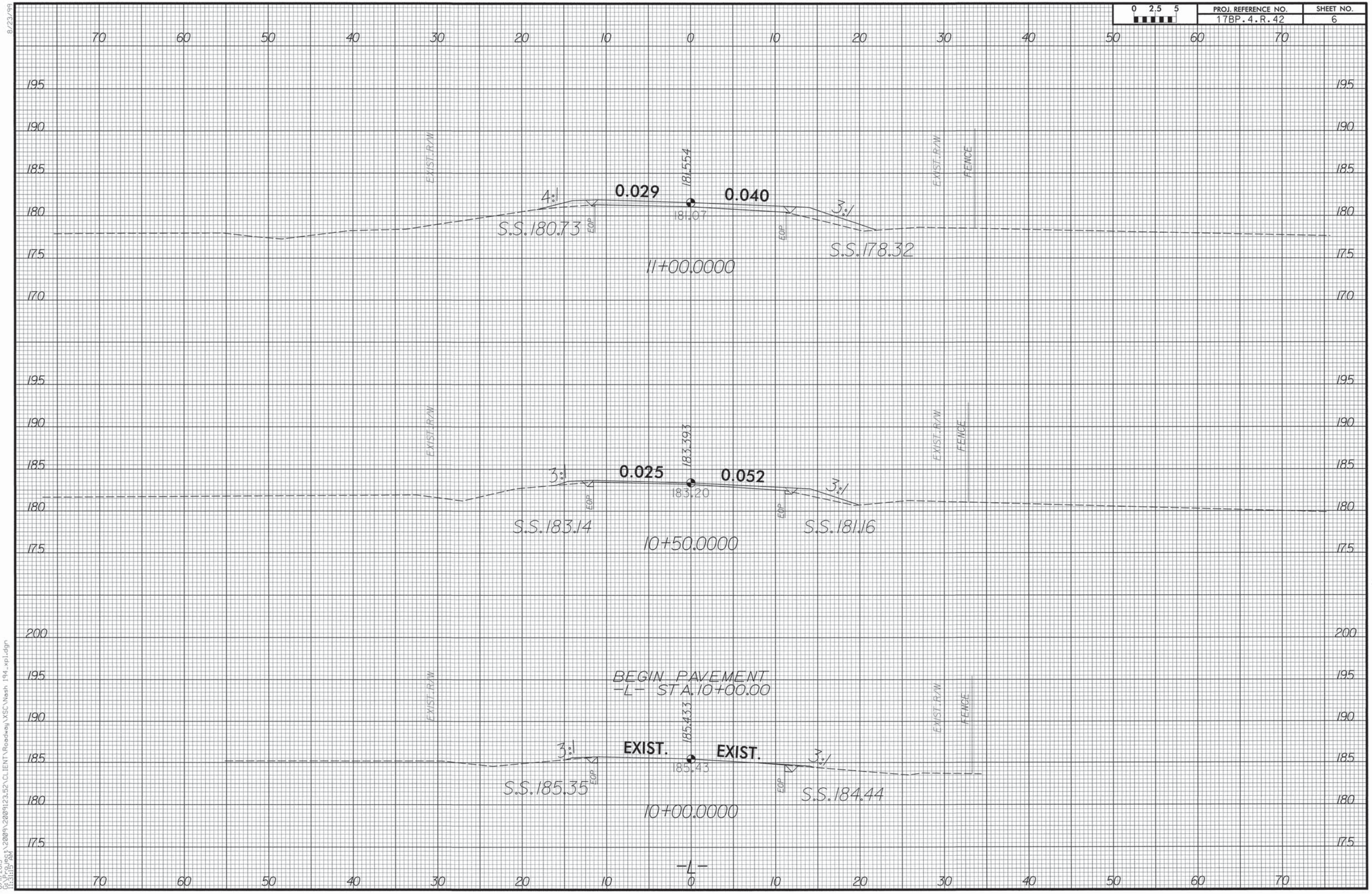

8/23/99

6/11/2013
G:\Projects\2009\2009123.52\CLIENT\Roadway\XSC\Nash 194_xpl.dgn
11:31:15 AM

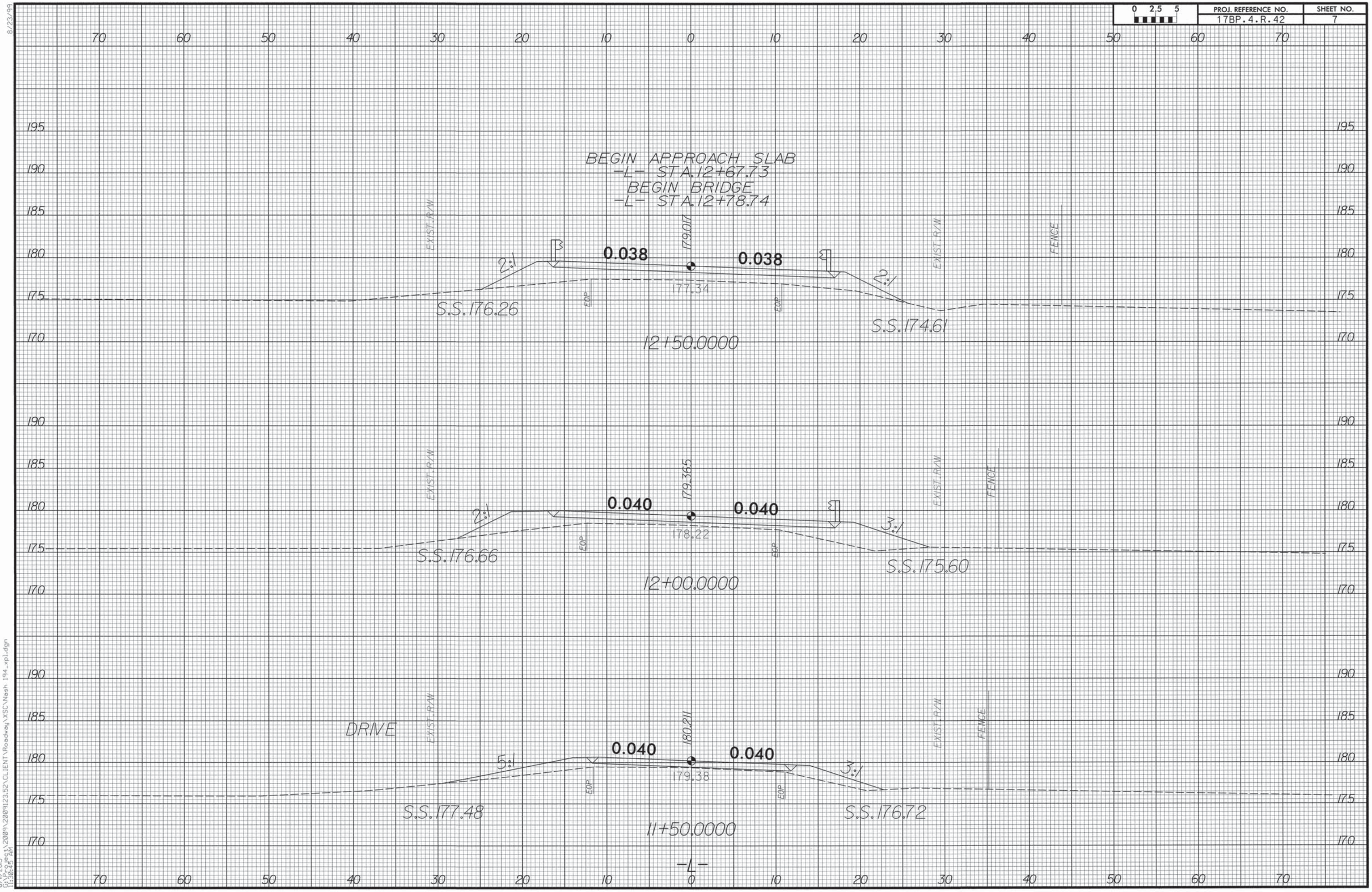

8/23/99
6/11/2013
G:\Project\2009\20091323.52\CLIENT\Roadway\XSC\Nash 194_xpl.dgn
11:30:45 AM

0 2.5 5	PROJ. REFERENCE NO.	SHEET NO.
	17BP.4.R.42	8

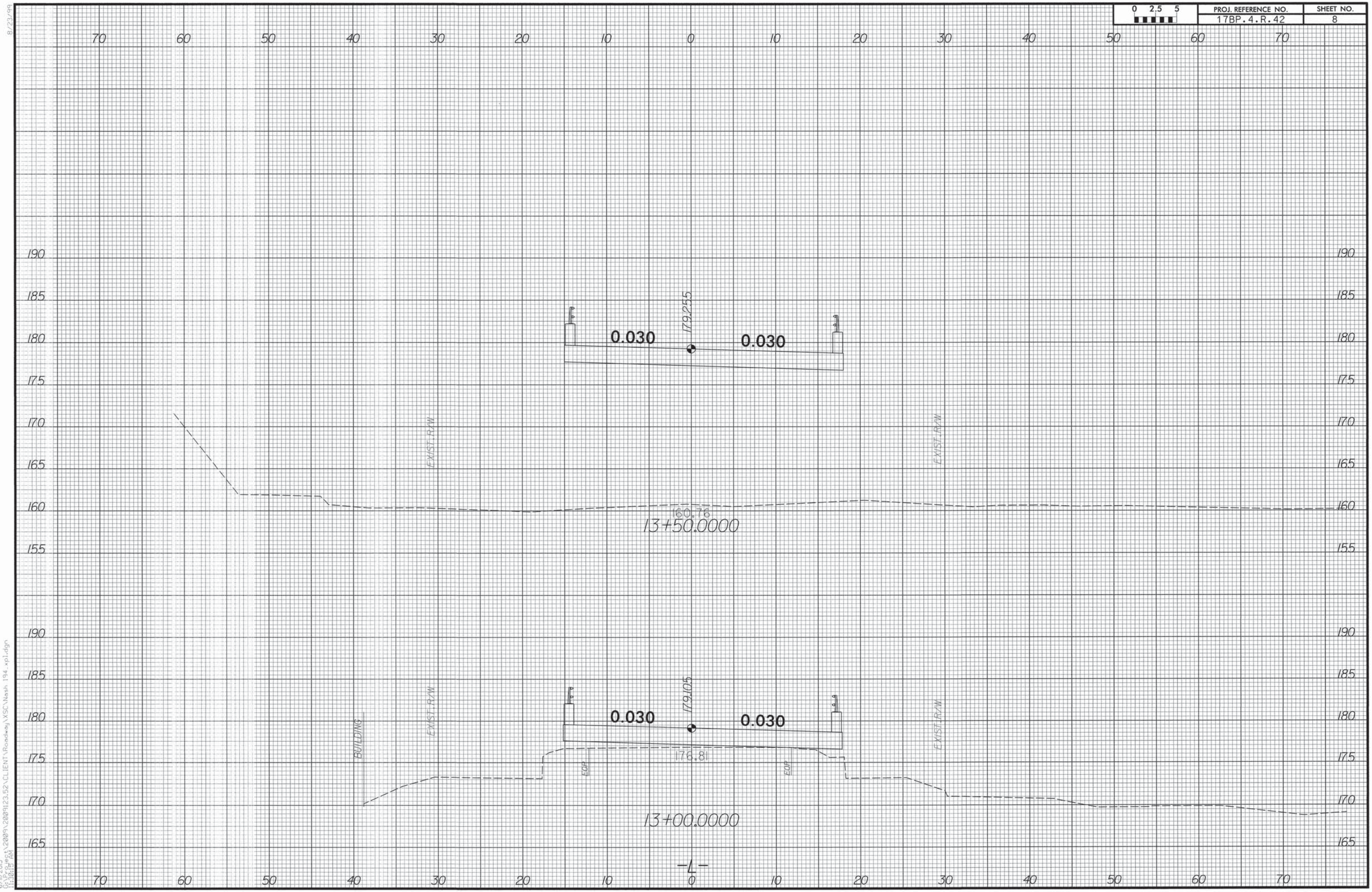

8/23/99

6/11/2013
G:\Project\2009\2009123.52\CLIENT\Roadway\XSC\Nash 194-xpl.dgn
11:20:15 AM

0 2.5 5	PROJ. REFERENCE NO.	SHEET NO.
	17BP.4.R.42	9

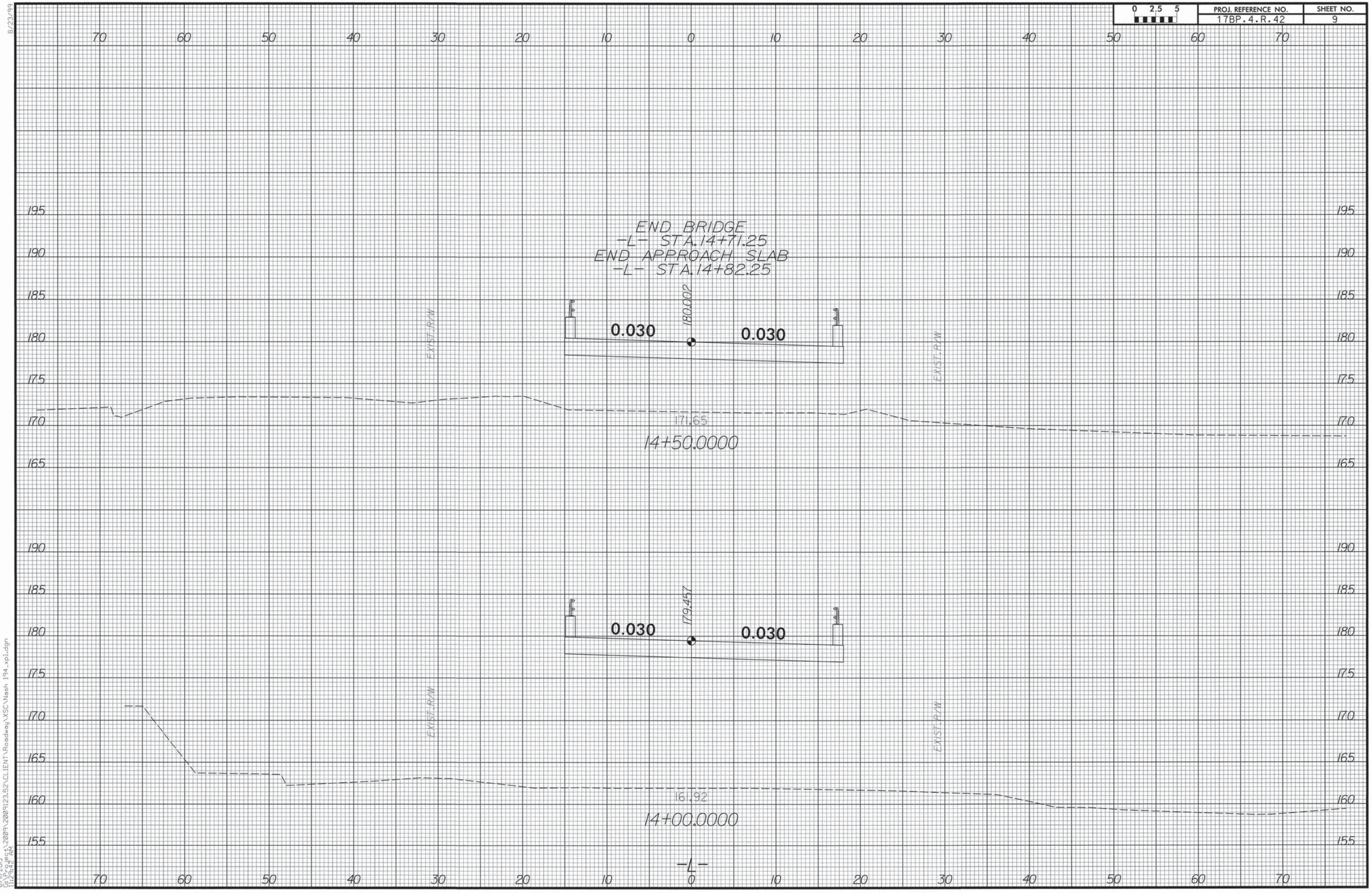

8/23/99

6/11/2013
G:\Projects\2009\2009123.52\CLIENT\Roadway\XSC\Nash 194_xpl.dgn
11:24:42 AM

PROJ. REFERENCE NO.	SHEET NO.
17BP.4.R.42	10

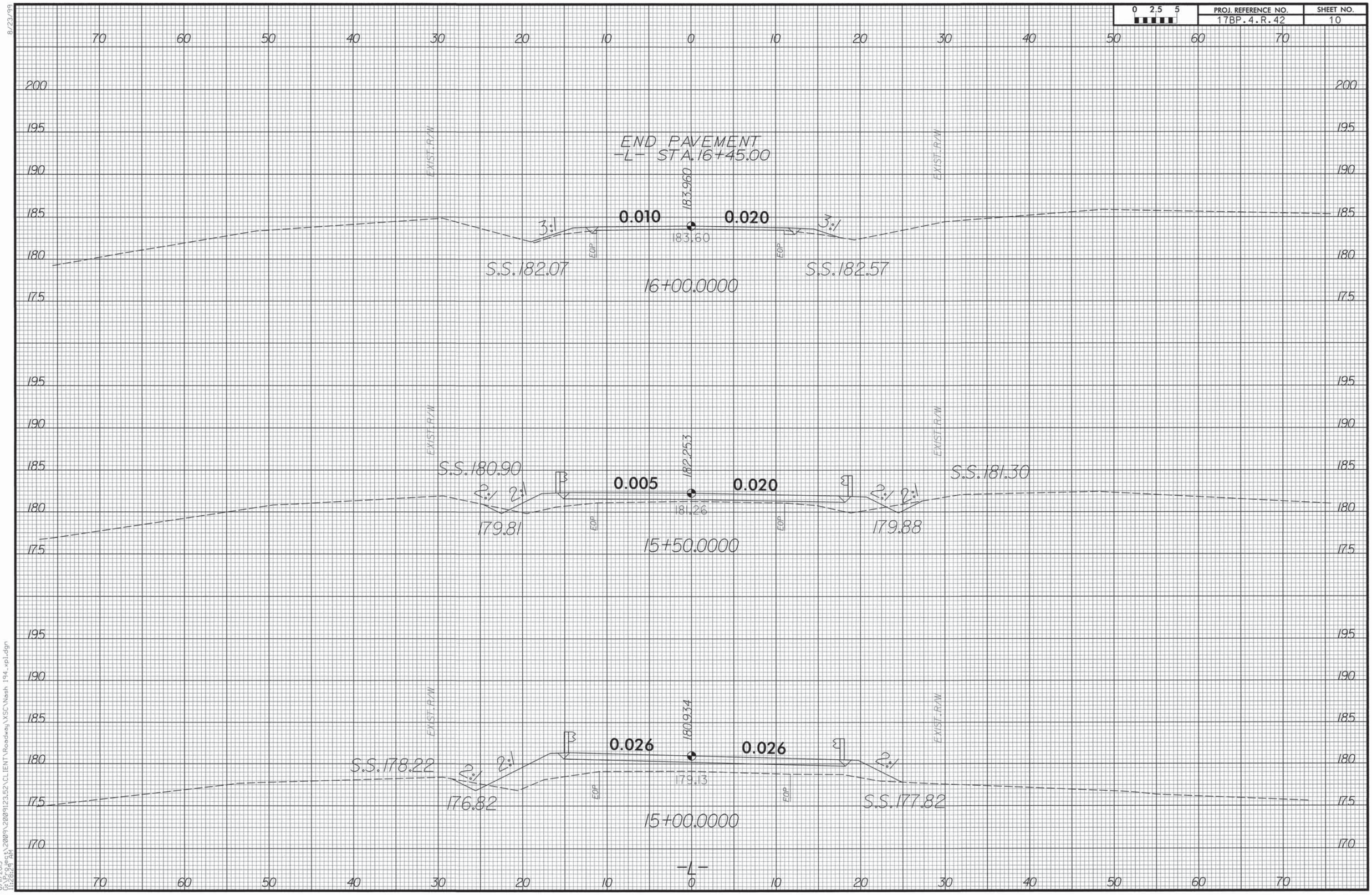

8/23/99

6/11/2013
G:\Project\2009\2009123.52\CLIENT\Roadway\XSC\Nash 194_xp1.dgn
11:28:28 AM

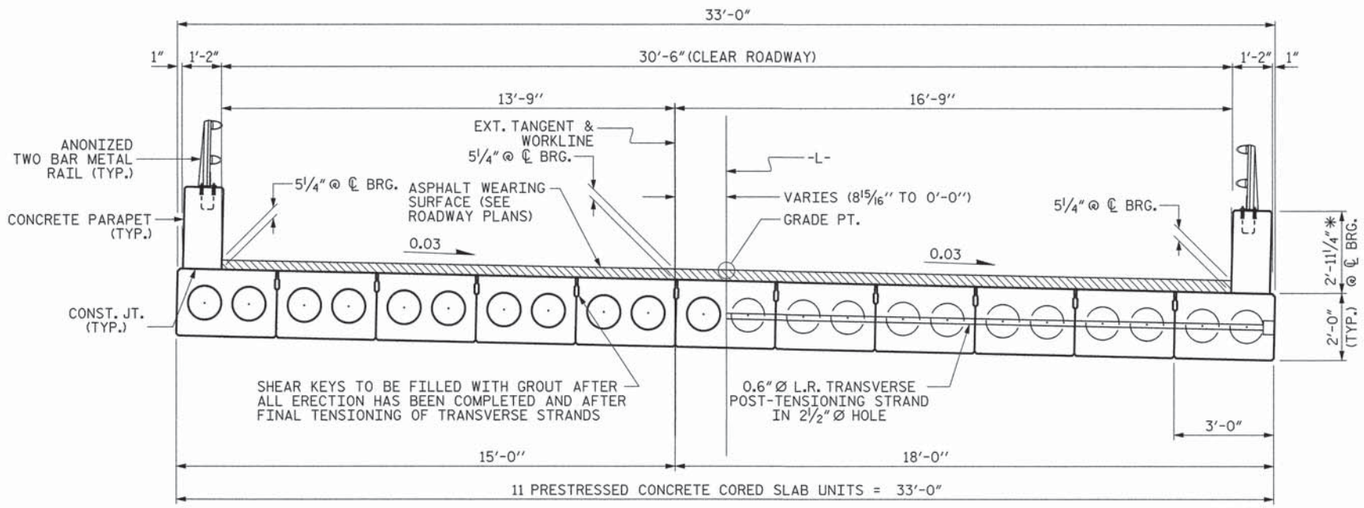

HALF SECTION AT INTERMEDIATE DIAPHRAGMS

HALF SECTION THROUGH VOIDS

TYPICAL SECTION

✳ - THE MAXIMUM BARRIER RAIL HEIGHT AND ASPHALT THICKNESS IS SHOWN. THE HEIGHT OF THE BARRIER RAIL AND ASPHALT THICKNESS VARIES WHILE THE TOP OF THE BARRIER RAIL FOLLOWS THE PROFILE OF THE GUTTERLINE. FOR RAIL HEIGHT DETAILS AND ASPHALT THICKNESS, SEE THE "PARAPET AND END POST DETAILS."

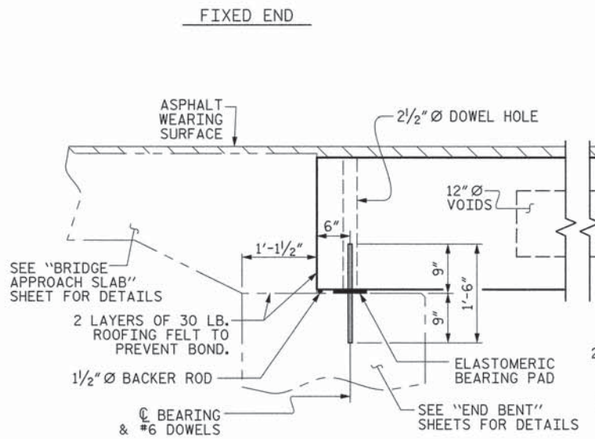

SECTION AT END BENT

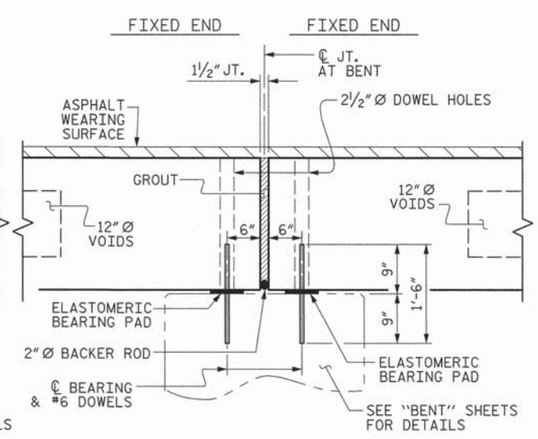

SECTION AT BENT

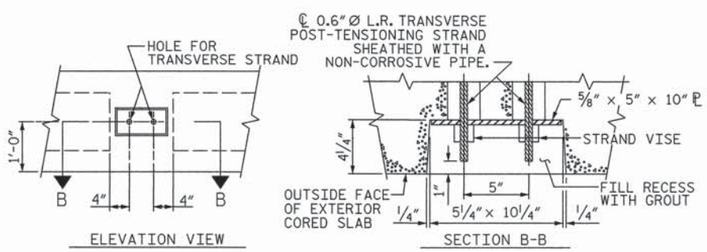

GROUTED RECESS AT END OF POST-TENSIONED STRAND CORED SLABS

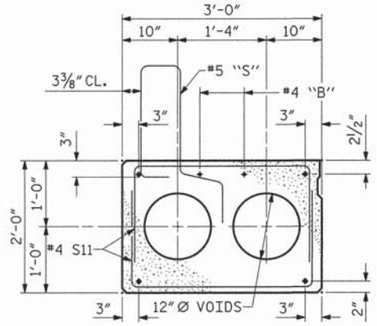

EXTERIOR SLAB SECTION

(FOR PRESTRESSED STRAND LAYOUT, SEE INTERIOR SLAB SECTION.)

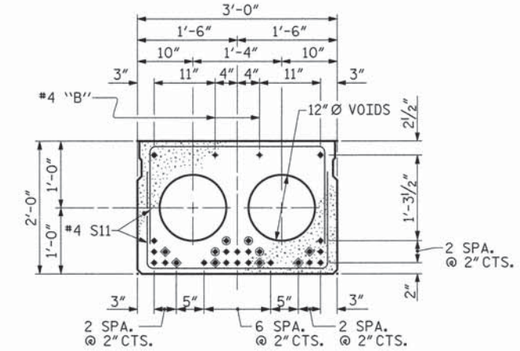

INTERIOR SLAB SECTION (60' UNIT)

(24 STRANDS REQUIRED)

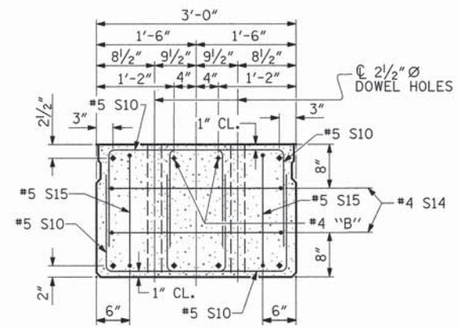

END ELEVATION

SHOWING PLACEMENT OF DOUBLE STIRRUPS AND LOCATION OF DOWEL HOLES. (STRAND LAYOUT NOT SHOWN.) INTERIOR SLAB UNIT SHOWN-EXTERIOR SLAB UNIT SIMILAR EXCEPT SHEAR KEY LOCATION.

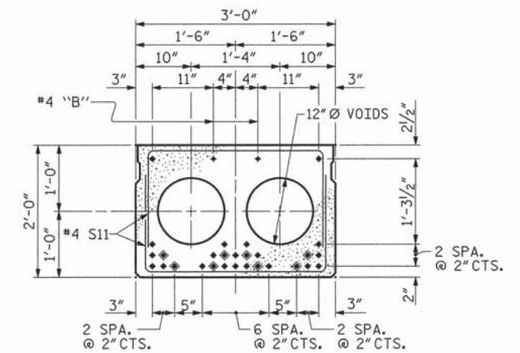

INTERIOR SLAB SECTION (70' UNIT)

(28 STRANDS REQUIRED)

0.6" Ø LOW RELAXATION STRAND LAYOUT

◈ BOND SHALL BE BROKEN ON THESE STRANDS FOR A DISTANCE OF 12'-0" FROM END OF CORED SLAB UNIT. SEE STANDARD SPECIFICATIONS, ARTICLE 1078-7.

◉ OPTIONAL FULL LENGTH DEBONDED STRANDS. THESE STRANDS ARE NOT REQUIRED. IF THE FABRICATOR CHOOSES TO INCLUDE THESE STRANDS IN THE CORED SLAB UNIT, THE STRANDS SHALL BE DEBONDED FOR THE FULL LENGTH OF THE UNIT AT NO ADDITIONAL COST. SEE STANDARD SPECIFICATIONS, ARTICLE 1078-7.

DEBONDING LEGEND

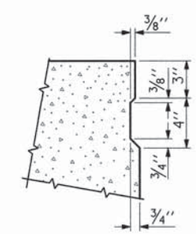

SHEAR KEY DETAIL

NOTE: OMIT SHEAR KEY ON OUTSIDE FACE OF EXTERIOR CORED SLABS.

PROJECT NO. 17BP.4.R.42

NASH COUNTY

STATION: 13+75.00 -L-

SHEET 1 OF 5

PLANS PREPARED BY:

MULKEY ENGINEERS & CONSULTANTS
PO Box 33127
Raleigh, N.C. 27636
(919) 851-1912
(919) 851-1918 (FAX)
WWW.MULKEYINC.COM
NC LICENSE NO. C-1021

THIS STANDARD DRAWING REVIEWED & ADOPTED FOR USE AT THE REFERENCED LOCATION BY THE UNDERSIGNED:

NORTH CAROLINA PROFESSIONAL SEAL 19661 ENGINEER KEVIN AUSTIN 6/13/13

STATE OF NORTH CAROLINA
DEPARTMENT OF TRANSPORTATION
RALEIGH

STANDARD

3'-0" X 2'-0" PRESTRESSED CONCRETE CORED SLAB UNIT

REVISIONS								SHEET NO.
NO.	BY:	DATE:		NO.	BY:	DATE:		11
1				3				TOTAL SHEETS
2				4				35

STD. NO. 24PCS4_33_90S

ASSEMBLED BY : Z. H. BROWN		DATE : 11/19/12	
CHECKED BY : W. A. DAVIS		DATE : 5/13/13	
DRAWN BY : MAA	6/10	REV. 12/11	MAA/AAC
CHECKED BY : MKT	7/10		

6/12/2013 1:42:37 PM G:\Project\2009\200923.52\CLIENT\Structures\Nash PR4.50.C5.Dwgn

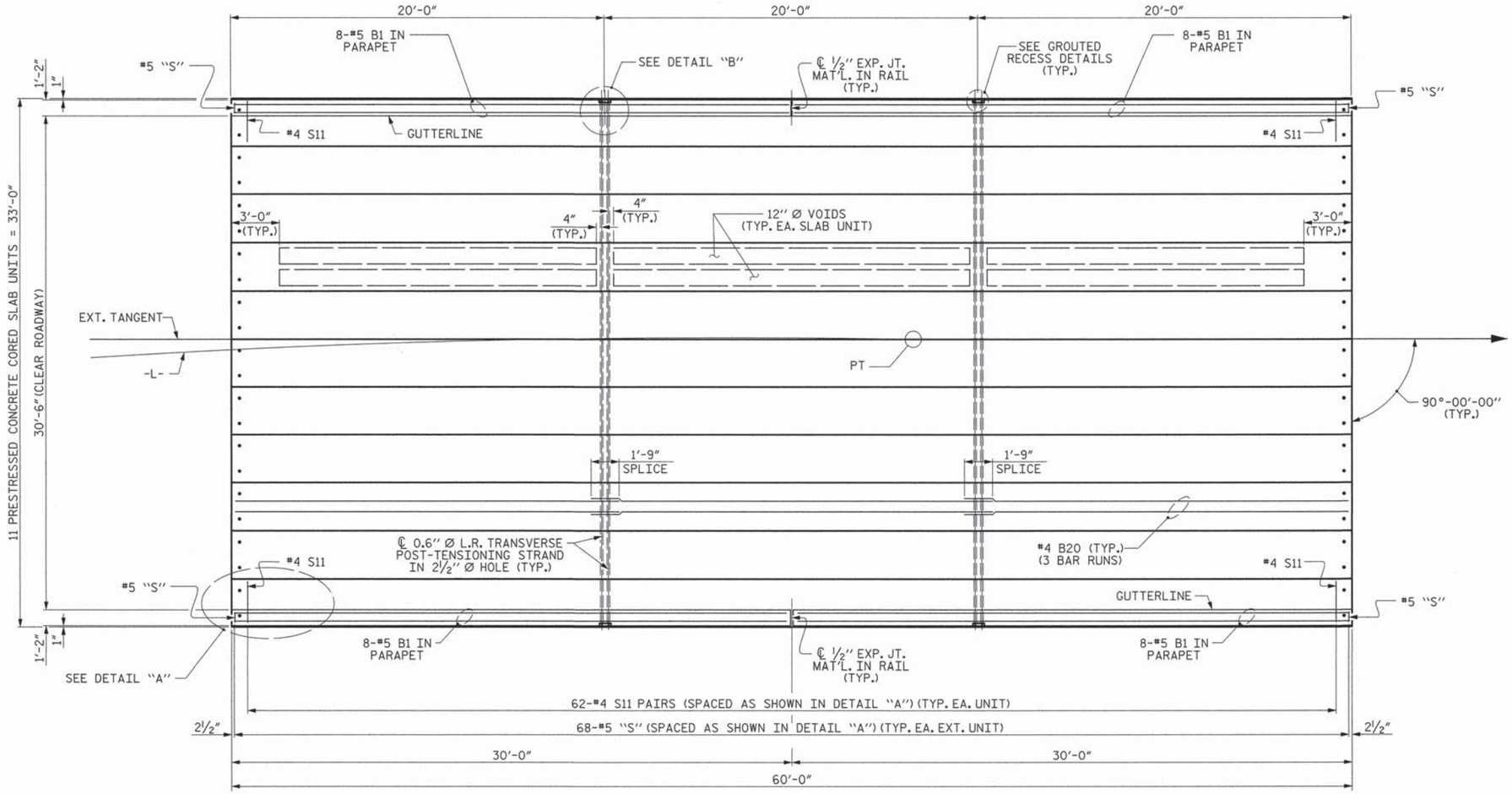

PLAN OF UNIT

(SPAN A SHOWN, SPAN B SIMILAR)

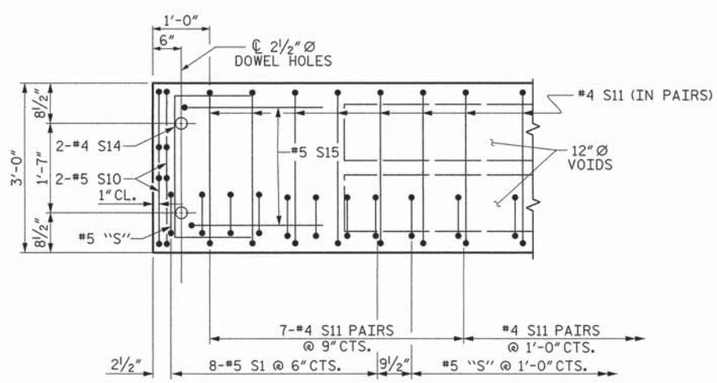

DETAIL "A"

NOTE: EXTERIOR UNIT SHOWN - INTERIOR UNIT SIMILAR EXCEPT OMIT #5 "S" BARS.

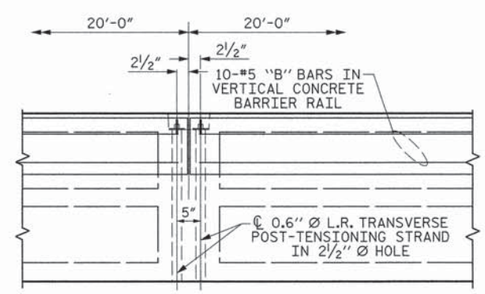

DETAIL "B"

#4 S11 BARS MAY BE SHIFTED AS NECESSARY TO MAINTAIN 1" CLEAR TO GROUTED RECESS AND 2 1/2" Ø TRANSVERSE POST-TENSIONING STRAND HOLES

PROJECT NO. 17BP.4.R.42

NASH COUNTY

STATION: 13+75.00 -L-

SHEET 2 OF 5

STATE OF NORTH CAROLINA
DEPARTMENT OF TRANSPORTATION
RALEIGH

PLAN OF 60' UNIT 30'-6" CLEAR ROADWAY 90° SKEW

THIS STANDARD DRAWING REVIEWED & ADOPTED FOR USE AT THE REFERENCED LOCATION BY THE UNDERSIGNED:

NORTH CAROLINA PROFESSIONAL SEAL 19661 ENGINEER L. KEVIN AUSTIN 6/13/13

PLANS PREPARED BY:
MULKEY ENGINEERS & CONSULTANTS
PO Box 33127
Raleigh, N.C. 27636
(919) 851-1912
(919) 851-1918 (FAX)
WWW.MULKEYINC.COM
NC LICENSE NO. C-1021

REVISIONS						SHEET NO.
NO.	BY:	DATE:	NO.	BY:	DATE:	12
1			3			TOTAL SHEETS
2			4			35

ASSEMBLED BY :	Z. H. BROWN	DATE :	11/19/12
CHECKED BY :	W. A. DAVIS	DATE :	5/13/13
DRAWN BY : MAA	6/10	REV. 12/5/11	MAA/AAC
CHECKED BY : MKT	7/10		

STD. NO. 24PCS_33_90S_60L

6/12/2013 b4465 PM G:\Project\2009\200923.52\CLIENT\Structures\Nash 194_SD_CS_02.dgn

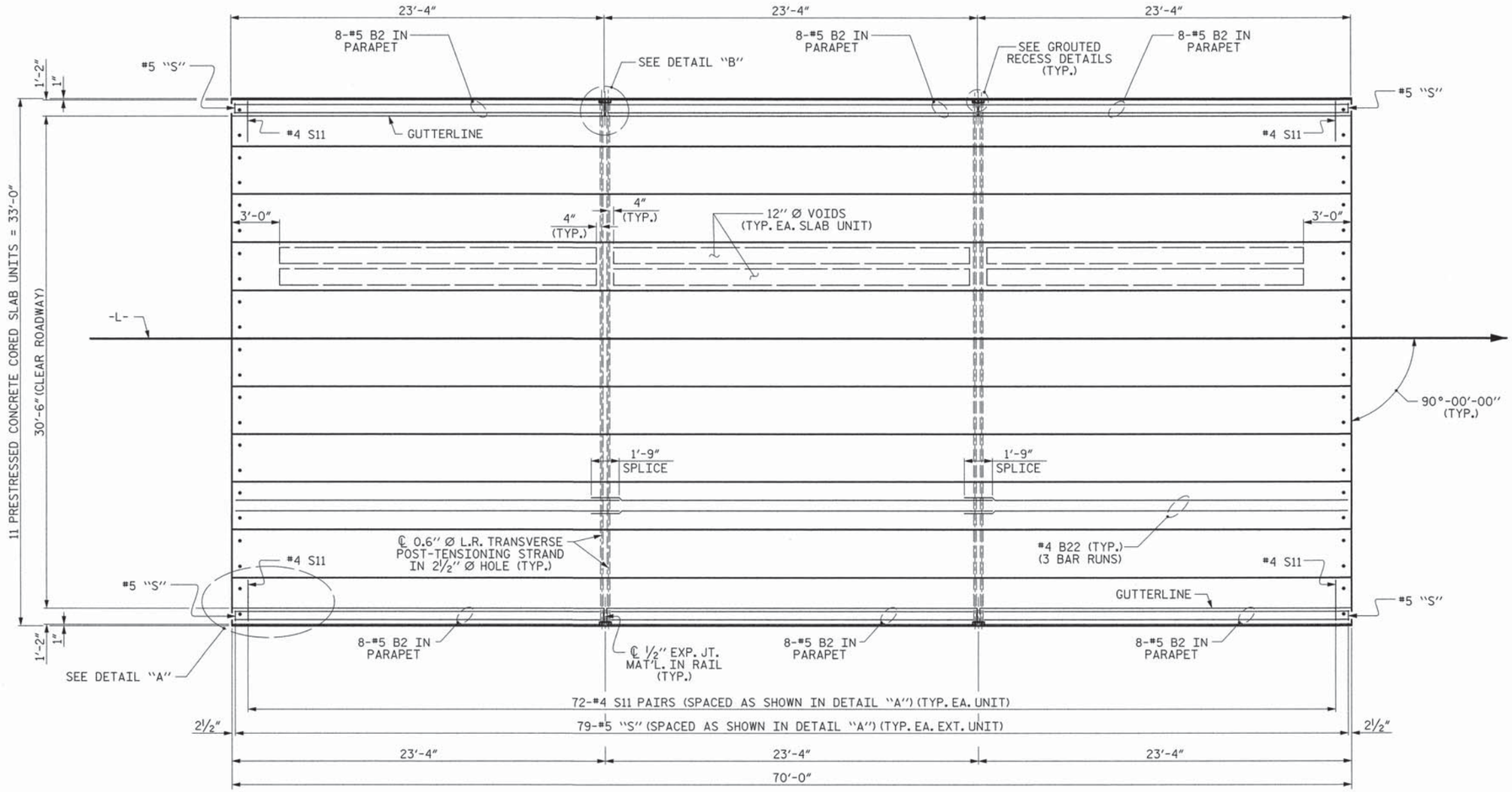

PLAN OF UNIT

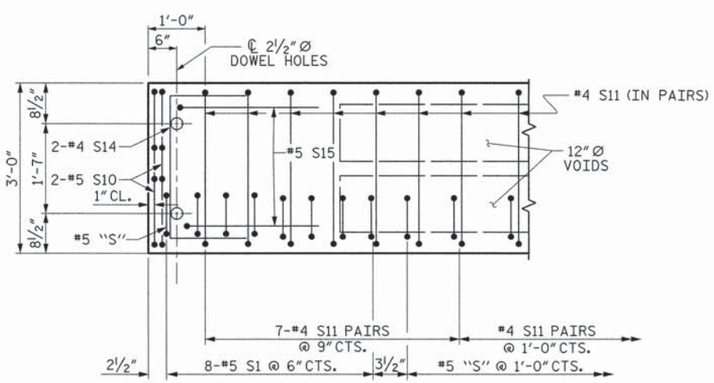

DETAIL "A"

NOTE: EXTERIOR UNIT SHOWN - INTERIOR UNIT SIMILAR EXCEPT OMIT #5 "S" BARS.

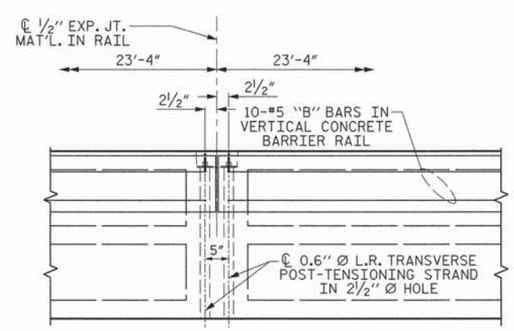

DETAIL "B"

#4 S11 BARS MAY BE SHIFTED AS NECESSARY TO MAINTAIN 1" CLEAR TO GROUTED RECESS AND 2½" Ø TRANSVERSE POST-TENSIONING STRAND HOLES

PROJECT NO. 17BP.4.R.42

NASH COUNTY

STATION: 13+75.00 -L-

SHEET 3 OF 5

STATE OF NORTH CAROLINA
DEPARTMENT OF TRANSPORTATION
RALEIGH

PLAN OF 70' UNIT 30'-6" CLEAR ROADWAY 90° SKEW

THIS STANDARD DRAWING REVIEWED & ADOPTED FOR USE AT THE REFERENCED LOCATION BY THE UNDERSIGNED:

NORTH CAROLINA PROFESSIONAL ENGINEER SEAL 19661 L. KEVIN AUSTIN 6/12/13

PLANS PREPARED BY:
MULKEY ENGINEERS & CONSULTANTS
PO Box 33127 Raleigh, N.C. 27636 (919) 851-1912 (919) 851-1918 (FAX) WWW.MULKEYINC.COM
NC LICENSE NO. C-1021

REVISIONS						SHEET NO.
NO.	BY:	DATE:	NO.	BY:	DATE:	13
1			3			TOTAL SHEETS
2			4			35

ASSEMBLED BY :	Z. H. BROWN	DATE :	11/19/12
CHECKED BY :	W. A. DAVIS	DATE :	5/13/13
DRAWN BY : MAA 6/10	REV. 12/5/11 MAA/AAC		
CHECKED BY : MKT 7/10			

STD. NO. 24PCS_33_90S_70L

6/11/2013 2:22:04 PM G:\Project\2009\2009.23.52\CLIENT\Structures\Nash 194_SD_CS_03.dgn

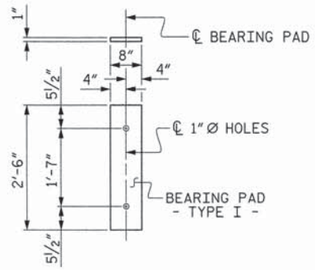

FIXED END
(TYPE I - 44 REQ'D)

ELASTOMERIC BEARING DETAILS

ELASTOMER IN ALL BEARINGS SHALL BE 60 DUROMETER HARDNESS.

GRADE 270 STRANDS	
	0.6"Ø L.R.
AREA (SQUARE INCHES)	0.217
ULTIMATE STRENGTH (LBS. PER STRAND)	58,600
APPLIED PRESTRESS (LBS. PER STRAND)	43,950

CORED SLABS REQUIRED			
	NUMBER	LENGTH	TOTAL LENGTH
60' UNIT			
EXTERIOR C.S.	4	60'-0"	240'-0"
INTERIOR C.S.	18	60'-0"	1080'-0"
TOTAL	22		1320'-0"

CONCRETE RELEASE STRENGTH	
UNIT	PSI
60' UNITS	4800

BAR TYPES

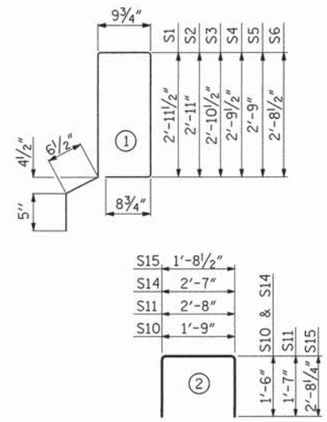

ALL BAR DIMENSIONS ARE OUT TO OUT

NOTES

ALL PRESTRESSING STRANDS SHALL BE 7-WIRE LOW RELAXATION GRADE 270 STRANDS AND SHALL CONFORM TO AASHTO M203 EXCEPT FOR SAMPLING REQUIREMENTS WHICH SHALL BE IN ACCORDANCE WITH THE STANDARD SPECIFICATIONS.

ALL REINFORCING STEEL CAST WITH THE CORED SLAB SECTIONS SHALL BE GRADE 60 AND SHALL BE INCLUDED IN THE UNIT PRICE BID FOR PRESTRESSED CONCRETE CORED SLABS.

RECESSES FOR TRANSVERSE STRANDS SHALL BE GROUTED AFTER THE TENSIONING OF THE STRANDS.

THE 2½"Ø DOWEL HOLES AT FIXED ENDS OF SLAB SECTIONS SHALL BE FILLED WITH NON-SHRINK GROUT.

THE BACKER RODS SHALL CONFORM TO THE REQUIREMENTS OF TYPE M BOND BREAKER. SEE SECTION 1028 OF THE STANDARD SPECIFICATIONS.

WHEN CORED SLABS ARE CAST, AN INTERNAL HOLD-DOWN SYSTEM SHALL BE EMPLOYED TO PREVENT VOIDS FROM RISING OR MOVING SIDEWAYS. AT LEAST SIX WEEKS PRIOR TO CASTING CORED SLABS, THE CONTRACTOR SHALL SUBMIT TO THE ENGINEER FOR REVIEW AND COMMENT, DETAILED DRAWINGS OF THE PROPOSED HOLD-DOWN SYSTEM. IN ADDITION TO STRUCTURAL DETAILS, LOCATION AND SPACING OF THE HOLD-DOWNS SHALL BE INDICATED.

THE TRANSFER OF LOAD FROM THE ANCHORAGES TO THE CORED SLAB UNIT SHALL BE DONE WHEN THE CONCRETE HAS REACHED A COMPRESSIVE STRENGTH OF NOT LESS THAN THE REQUIRED STRENGTH SHOWN IN THE "CONCRETE RELEASE STRENGTH" TABLE.

ALL REINFORCING STEEL IN VERTICAL CONCRETE BARRIER RAILS SHALL BE EPOXY COATED.

PRESTRESSING STRANDS SHALL BE CUT FLUSH WITH THE CORED SLAB UNIT ENDS.

APPLY EPOXY PROTECTIVE COATING TO CORED SLAB UNIT ENDS.

GROOVED CONTRACTION JOINTS, ½" IN DEPTH, SHALL BE TOOLED IN ALL EXPOSED FACES OF THE BARRIER RAIL AND IN ACCORDANCE WITH ARTICLE 825-10(B) OF THE STANDARD SPECIFICATIONS. A CONTRACTION JOINT SHALL BE LOCATED AT EACH THIRD POINT BETWEEN BARRIER RAIL EXPANSION JOINTS. ONLY ONE CONTRACTION JOINT IS REQUIRED AT MIDPOINT OF BARRIER RAIL SEGMENTS LESS THAN 20 FEET IN LENGTH AND NO CONTRACTION JOINTS ARE REQUIRED FOR THOSE SEGMENTS LESS THAN 10 FEET IN LENGTH.

TRANSVERSE POST TENSIONING OF THE CORED SLAB UNITS SHALL BE DONE IN ACCORDANCE WITH THE STANDARD SPECIFICATIONS.

MAINTAIN A SYMMETRIC TENSION FORCE BETWEEN EACH PAIR OF TRANSVERSE POST TENSIONING STRANDS IN THE DIAPHRAGM.

THE #4 S11 STIRRUPS MAY BE SHIFTED AS NECESSARY TO MAINTAIN 1" CLEAR TO THE GROUTED RECESS.

FOR GROUT FOR STRUCTURES, SEE SPECIAL PROVISIONS.

BILL OF MATERIAL FOR ONE 60' CORED SLAB UNIT

				EXTERIOR UNIT		INTERIOR UNIT	
BAR	NUMBER	SIZE	TYPE	LENGTH	WEIGHT	LENGTH	WEIGHT
B20	6	#4	STR	21'-2"	85	21'-2"	85
✳ S1	16	#5	1	8'-5"	140		
✳ S2	8	#5	1	8'-4"	70		
✳ S4	18	#5	1	8'-1"	152		
✳ S5	26	#5	1	8'-0"	217		
S10	8	#5	2	4'-9"	40	4'-9"	40
S11	124	#4	2	5'-10"	483	5'-10"	483
S14	4	#4	2	5'-7"	15	5'-7"	15
S15	4	#5	2	7'-1"	30	7'-1"	30
REINFORCING STEEL			LBS.		653		653
✳ EPOXY COATED REINFORCING STEEL			LBS.		579		
6000 P.S.I. CONCRETE			CU. YDS.		10.2		10.2
0.6"Ø L.R. STRANDS			No.		24		24

GUTTERLINE ASPHALT THICKNESS & RAIL HEIGHT		
	ASPHALT OVERLAY THICKNESS @ MID-SPAN	RAIL HEIGHT @ MID-SPAN
60' UNITS	2⅜"	2'-8⅜"

DEAD LOAD DEFLECTION AND CAMBER		
	3'-0" x 2'-0"	
60' CORED SLAB UNIT	0.6"Ø L.R. STRAND	
CAMBER (SLAB ALONE IN PLACE)	3⅜"	↑
DEFLECTION DUE TO SUPERIMPOSED DEAD LOAD✳✳	½"	↓
FINAL CAMBER	2⅞"	↑

✳✳ INCLUDES FUTURE WEARING SURFACE

PROJECT NO. 17BP.4.R.42

NASH COUNTY

STATION: 13+75.00 -L-

SHEET 4 OF 5

PLANS PREPARED BY:

MULKEY ENGINEERS & CONSULTANTS
PO Box 33127
RALEIGH, N.C. 27636
(919) 851-1912
(919) 851-1918 (FAX)
WWW.MULKEYINC.COM
NC LICENSE NO. C-1021

THIS STANDARD DRAWING REVIEWED & ADOPTED FOR USE AT THE REFERENCED LOCATION BY THE UNDERSIGNED:

NORTH CAROLINA PROFESSIONAL ENGINEER SEAL 19661 L. KEVIN AUSTIN 6/13/13

STATE OF NORTH CAROLINA
DEPARTMENT OF TRANSPORTATION
RALEIGH

STANDARD
3'-0" X 2'-0"
PRESTRESSED CONCRETE
CORED SLAB UNIT
FOR 60 FT. SPANS

REVISIONS						SHEET NO.
NO.	BY:	DATE:	NO.	BY:	DATE:	14
1			3			TOTAL SHEETS
2			4			35

ASSEMBLED BY : Z. H. BROWN DATE : 11/19/12
CHECKED BY : W. A. DAVIS DATE : 5/13/13

6/12/2013 9:46:34 PM G:\Project\2009\200923.52\CLIENT\Structures\Nash 194.SD.CS.04.dgn

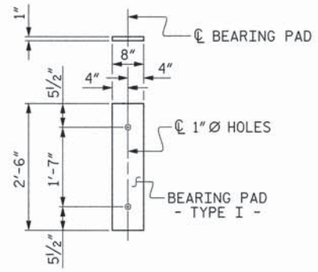

FIXED END
(TYPE I - 22 REQ'D)

ELASTOMERIC BEARING DETAILS

ELASTOMER IN ALL BEARINGS SHALL BE 60 DUROMETER HARDNESS.

GRADE 270 STRANDS	
	0.6"Ø L.R.
AREA (SQUARE INCHES)	0.217
ULTIMATE STRENGTH (LBS. PER STRAND)	58,600
APPLIED PRESTRESS (LBS. PER STRAND)	43,950

CORED SLABS REQUIRED			
	NUMBER	LENGTH	TOTAL LENGTH
70' UNIT			
EXTERIOR C.S.	2	70'-0"	140'-0"
INTERIOR C.S.	9	70'-0"	630'-0"
TOTAL	11		770'-0"

CONCRETE RELEASE STRENGTH	
UNIT	PSI
70' UNITS	5500

BILL OF MATERIAL FOR ONE 70' CORED SLAB UNIT							
				EXTERIOR UNIT		INTERIOR UNIT	
BAR	NUMBER	SIZE	TYPE	LENGTH	WEIGHT	LENGTH	WEIGHT
B22	6	#4	STR	24'-6"	98	24'-6"	98
✳ S1	16	#5	1	8'-5"	140		
✳ S2	10	#5	1	8'-4"	87		
✳ S3	12	#5	1	8'-3"	103		
✳ S4	10	#5	1	8'-1"	84		
✳ S5	16	#5	1	8'-0"	134		
✳ S6	15	#5	1	7'-11"	124		
S10	8	#5	2	4'-9"	40	4'-9"	40
S11	144	#4	2	5'-10"	561	5'-10"	561
S14	4	#4	2	5'-7"	15	5'-7"	15
S15	4	#5	2	7'-1"	30	7'-1"	30
REINFORCING STEEL LBS.					744		744
✳ EPOXY COATED REINFORCING STEEL LBS.					672		
7000 P.S.I. CONCRETE CU. YDS.					11.8		11.8
0.6"Ø L.R. STRANDS No.					28		28

DEAD LOAD DEFLECTION AND CAMBER	
	3'-0" x 2'-0"
70' CORED SLAB UNIT	0.6"Ø L.R. STRAND
CAMBER (SLAB ALONE IN PLACE)	4 5/16" ↑
DEFLECTION DUE TO SUPERIMPOSED DEAD LOAD✳✳	13/16" ↓
FINAL CAMBER	3½" ↑

✳✳ INCLUDES FUTURE WEARING SURFACE

BAR TYPES

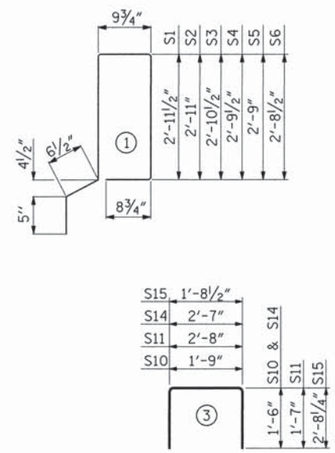

ALL BAR DIMENSIONS ARE OUT TO OUT

NOTES

ALL PRESTRESSING STRANDS SHALL BE 7-WIRE LOW RELAXATION GRADE 270 STRANDS AND SHALL CONFORM TO AASHTO M203 EXCEPT FOR SAMPLING REQUIREMENTS WHICH SHALL BE IN ACCORDANCE WITH THE STANDARD SPECIFICATIONS.

ALL REINFORCING STEEL CAST WITH THE CORED SLAB SECTIONS SHALL BE GRADE 60 AND SHALL BE INCLUDED IN THE UNIT PRICE BID FOR PRESTRESSED CONCRETE CORED SLABS.

RECESSES FOR TRANSVERSE STRANDS SHALL BE GROUTED AFTER THE TENSIONING OF THE STRANDS.

THE 2½"Ø DOWEL HOLES AT FIXED ENDS OF SLAB SECTIONS SHALL BE FILLED WITH NON-SHRINK GROUT.

THE BACKER RODS SHALL CONFORM TO THE REQUIREMENTS OF TYPE M BOND BREAKER. SEE SECTION 1028 OF THE STANDARD SPECIFICATIONS.

WHEN CORED SLABS ARE CAST, AN INTERNAL HOLD-DOWN SYSTEM SHALL BE EMPLOYED TO PREVENT VOIDS FROM RISING OR MOVING SIDEWAYS. AT LEAST SIX WEEKS PRIOR TO CASTING CORED SLABS, THE CONTRACTOR SHALL SUBMIT TO THE ENGINEER FOR REVIEW AND COMMENT, DETAILED DRAWINGS OF THE PROPOSED HOLD-DOWN SYSTEM. IN ADDITION TO STRUCTURAL DETAILS, LOCATION AND SPACING OF THE HOLD-DOWNS SHALL BE INDICATED.

THE TRANSFER OF LOAD FROM THE ANCHORAGES TO THE CORED SLAB UNIT SHALL BE DONE WHEN THE CONCRETE HAS REACHED A COMPRESSIVE STRENGTH OF NOT LESS THAN THE REQUIRED STRENGTH SHOWN IN THE "CONCRETE RELEASE STRENGTH" TABLE.

ALL REINFORCING STEEL IN VERTICAL CONCRETE BARRIER RAILS SHALL BE EPOXY COATED.

PRESTRESSING STRANDS SHALL BE CUT FLUSH WITH THE CORED SLAB UNIT ENDS.

APPLY EPOXY PROTECTIVE COATING TO CORED SLAB UNIT ENDS.

GROOVED CONTRACTION JOINTS, ½" IN DEPTH, SHALL BE TOOLED IN ALL EXPOSED FACES OF THE BARRIER RAIL AND IN ACCORDANCE WITH ARTICLE 825-10(B) OF THE STANDARD SPECIFICATIONS. A CONTRACTION JOINT SHALL BE LOCATED AT EACH THIRD POINT BETWEEN BARRIER RAIL EXPANSION JOINTS. ONLY ONE CONTRACTION JOINT IS REQUIRED AT MIDPOINT OF BARRIER RAIL SEGMENTS LESS THAN 20 FEET IN LENGTH AND NO CONTRACTION JOINTS ARE REQUIRED FOR THOSE SEGMENTS LESS THAN 10 FEET IN LENGTH.

TRANSVERSE POST TENSIONING OF THE CORED SLAB UNITS SHALL BE DONE IN ACCORDANCE WITH THE STANDARD SPECIFICATIONS.

MAINTAIN A SYMMETRIC TENSION FORCE BETWEEN EACH PAIR OF TRANSVERSE POST TENSIONING STRANDS IN THE DIAPHRAGM.

THE #4 S11 STIRRUPS MAY BE SHIFTED AS NECESSARY TO MAINTAIN 1" CLEAR TO THE GROUTED RECESS.

FOR GROUT FOR STRUCTURES, SEE SPECIAL PROVISIONS.

GUTTERLINE ASPHALT THICKNESS & RAIL HEIGHT		
	ASPHALT OVERLAY THICKNESS @ MID-SPAN	RAIL HEIGHT @ MID-SPAN
70' UNITS	1¾"	2'-7¾"

PROJECT NO. 17BP.4.R.42

NASH COUNTY

STATION: 13+75.00 -L-

SHEET 5 OF 5

PLANS PREPARED BY:
MULKEY ENGINEERS & CONSULTANTS
PO Box 33127
Raleigh, N.C. 27636
(919) 851-1912
(919) 851-1918 (FAX)
www.mulkeyinc.com
NC License No. C-1021

THIS STANDARD DRAWING REVIEWED & ADOPTED FOR USE AT THE REFERENCED LOCATION BY THE UNDERSIGNED:

NORTH CAROLINA PROFESSIONAL ENGINEER SEAL 19661 KEVIN AUSTIN 6/12/13

STATE OF NORTH CAROLINA
DEPARTMENT OF TRANSPORTATION
RALEIGH

STANDARD

3'-0" X 2'-0"
PRESTRESSED CONCRETE
CORED SLAB UNIT
FOR 70 FT. SPAN

REVISIONS						SHEET NO.
NO.	BY:	DATE:	NO.	BY:	DATE:	15
1			3			TOTAL SHEETS
2			4			35

ASSEMBLED BY : Z. H. BROWN		DATE : 11/19/12	
CHECKED BY : W. A. DAVIS		DATE : 5/13/13	
DRAWN BY : MAA	6/10	REV. 12/11	MAA/AAC
CHECKED BY : MKT	7/10		

6/12/2013 2:23:49 PM G:\Project\2009\2009023.57\CLIENT\Structures\Nash 194_50_CS_05.dgn

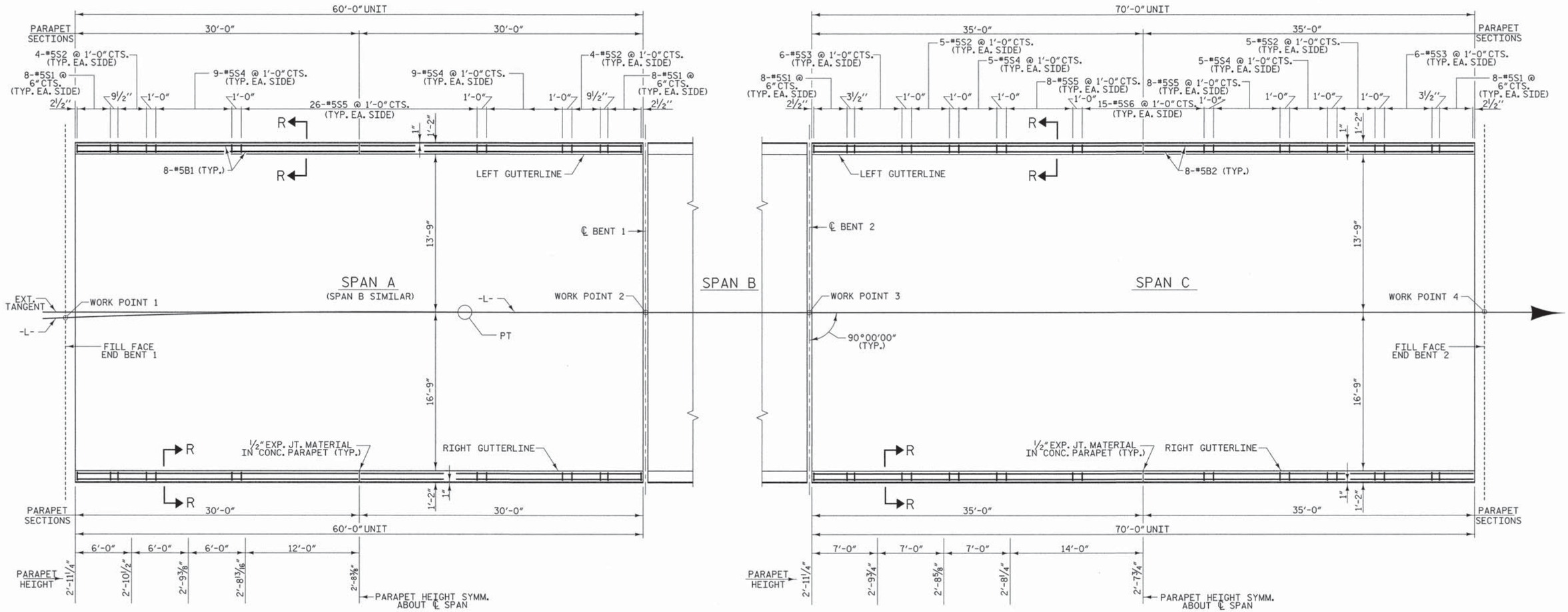

PLAN

NOTE: DISTANCES ARE ALONG OUTSIDE FACE OF PARAPET
FOR END POST DETAILS AND SECTION R-R SEE SHEET 17

PROJECT NO. 17BP.4.R.42
NASH COUNTY
STATION: 13+75.00 -L-

STATE OF NORTH CAROLINA
DEPARTMENT OF TRANSPORTATION
RALEIGH

PLAN OF PARAPET

30'-6" CLEAR ROADWAY - 90° SKEW

NORTH CAROLINA PROFESSIONAL ENGINEER SEAL 19661 L. KEVIN AUSTIN 6/12/13

PLANS PREPARED BY:
MULKEY ENGINEERS & CONSULTANTS
PO Box 33127
Raleigh, N.C. 27636
(919) 851-1912
(919) 851-1918 (FAX)
WWW.MULKEYINC.COM
NC LICENSE NO. C-1021

REVISIONS						SHEET NO.
NO.	BY:	DATE:	NO.	BY:	DATE:	16
1			3			TOTAL SHEETS
2			4			35

DRAWN BY : Z. H. BROWN DATE : 5/13
CHECKED BY : W. A. DAVIS DATE : 5/13

6/11/2013 2:24:58 PM G:\Project\2009\200923.52\CLIENT\Structures\Nash (94_SD_PR_0).dgn

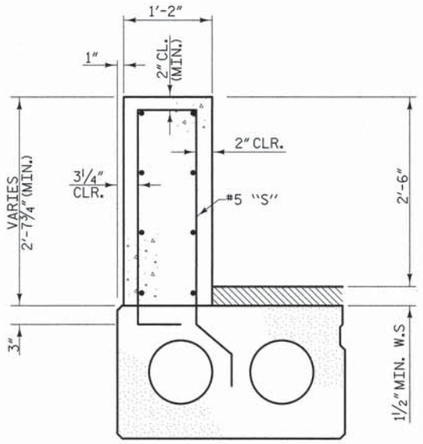

SECTION R-R

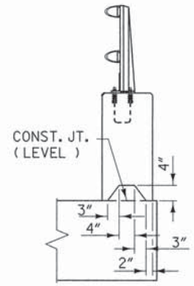

SECTION S-S

AT DAM IN OPEN JOINT
(THIS IS TO BE USED ONLY WHEN SLIP FORM IS USED)

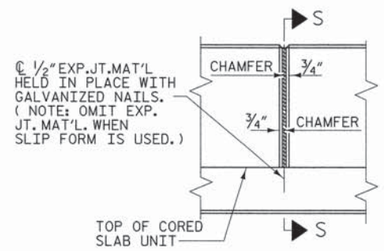

ELEVATION AT EXPANSION JOINTS

NOTES

ALL REINFORCING STEEL IN THE PARAPET AND END POSTS SHALL BE EPOXY COATED.

#5 "S" BARS MAY BE SHIFTED SLIGHTLY AS NECESSARY TO AVOID INTERFERENCE WITH THE TWO BAR METAL RAIL POST ANCHORAGE ASSEMBLIES.

FOR DETAILS OF GUARDRAIL ANCHOR ASSEMBLY, SEE "GUARDRAIL ANCHORAGE" SHEETS, SHT. NO. 17.

FOR DETAILS OF CONCRETE INSERT SEE "RAIL POST SPACING AND END OF RAIL DETAILS, SHT. NO. 12

BILL OF MATERIAL FOR PARAPET & END POSTS

BAR	NO.	SIZE	TYPE	LENGTH	WEIGHT
✳B1	64	#5	STR	29'-8"	1980
✳B2	48	#5	STR	22'-11"	1147
✳E1	8	#7	STR	3'-0"	49
✳E2	8	#7	STR	3'-6"	57
✳E3	8	#7	STR	4'-0"	65
✳E4	8	#7	STR	4'-6"	74
✳E5	8	#7	STR	4'-10"	79
✳F1	8	#6	STR	1'-10"	22
✳F2	8	#6	STR	3'-0"	36
✳F3	8	#6	STR	3'-4"	40

✳EPOXY COATED REINFORCING STEEL LBS. =	3549
CLASS AA CONCRETE CU. YDS. =	46.2
CONCRETE PARAPET L.F. =	380

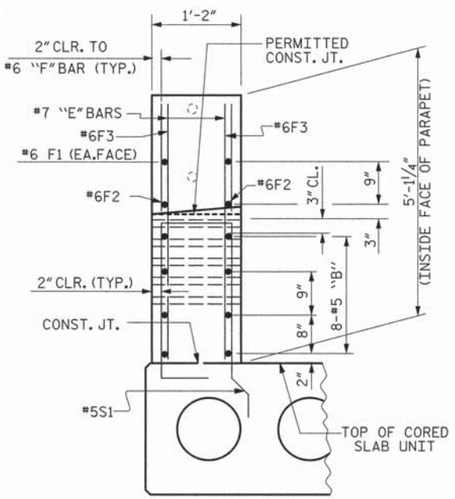

END VIEW

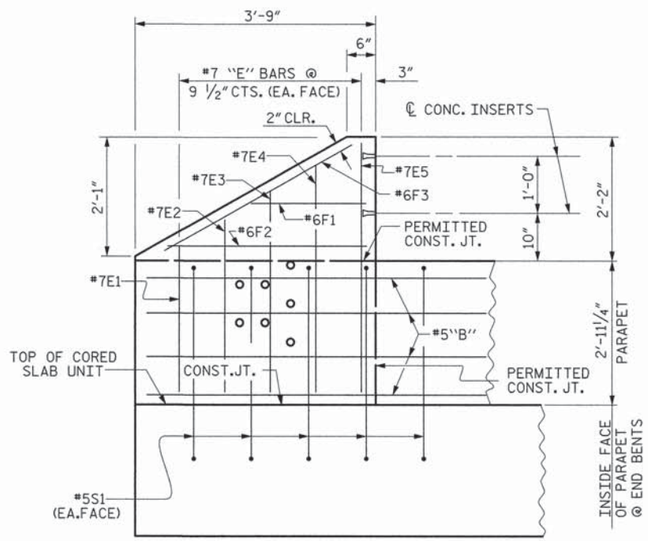

ELEVATION

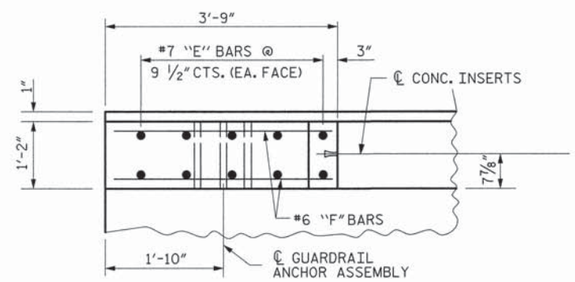

PLAN OF END POSTS

PARAPET AND END POST DETAILS

PROJECT NO. 17BP.4.R.42
NASH COUNTY
STATION: 13+75.00 -L-

THIS STANDARD DRAWING REVIEWED & ADOPTED FOR USE AT THE REFERENCED LOCATION BY THE UNDERSIGNED:

NORTH CAROLINA PROFESSIONAL ENGINEER SEAL 19661 L. KEVIN AUSTIN
6/13/13

PLANS PREPARED BY:
MULKEY ENGINEERS & CONSULTANTS
PO Box 33127 Raleigh, N.C. 27636
(919) 851-1912
(919) 851-1918 (FAX)
WWW.MULKEYINC.COM
NC LICENSE NO. C-1021

STATE OF NORTH CAROLINA
DEPARTMENT OF TRANSPORTATION
RALEIGH

PARAPET AND END POST DETAILS

30'-6" CLEAR ROADWAY - 90° SKEW

REVISIONS							SHEET NO.
NO.	BY:	DATE:	NO.	BY:	DATE:		17
1			3				TOTAL SHEETS
2			4				35

DRAWN BY :	Z. H. BROWN	DATE :	5/13
CHECKED BY :	W. A. DAVIS	DATE :	5/13

6/13/2013 1:34:44 PM G:\Project\2009\200923.52\CLIENT\Structures\Nash 194.30_PR_02.dgn

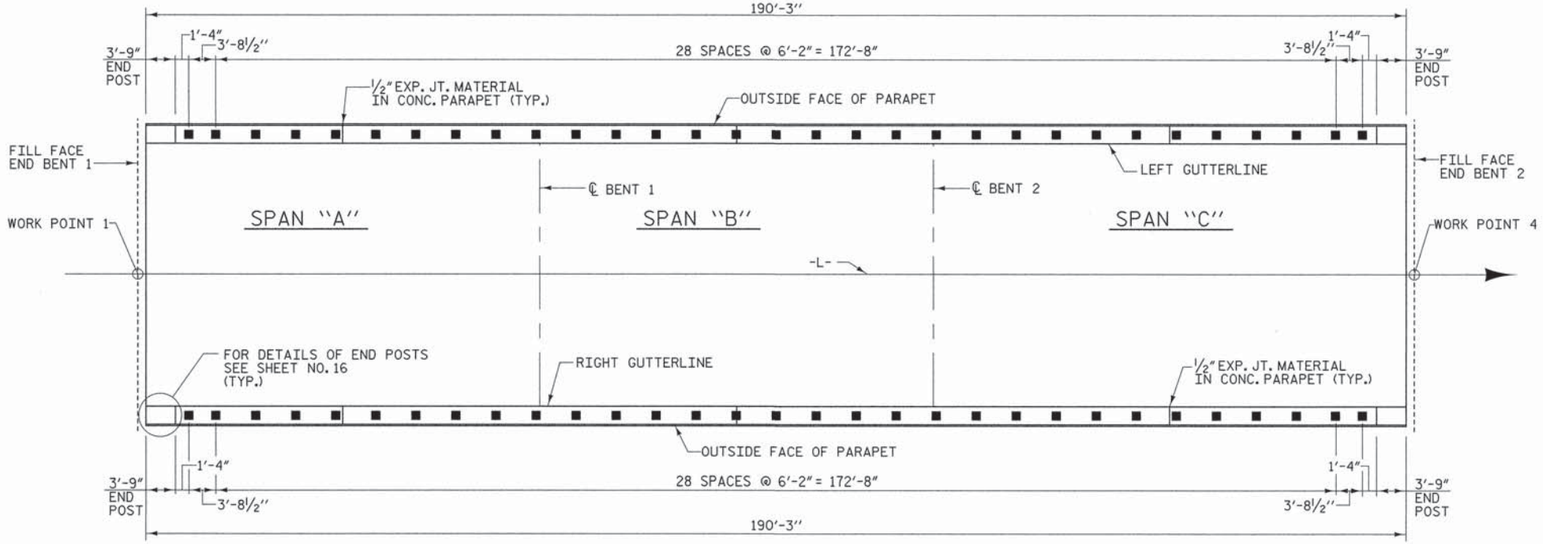

PLAN OF RAIL POST SPACINGS

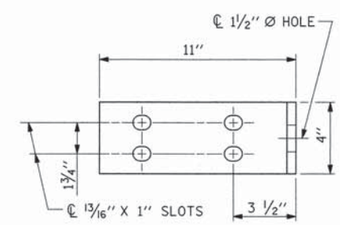

ELEVATION

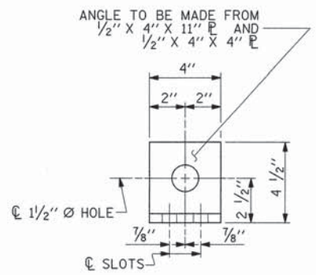

END VIEW (FIX AND EXP.)

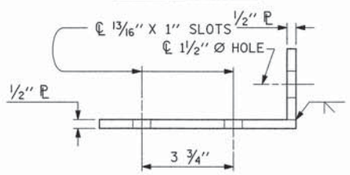

TOP VIEW

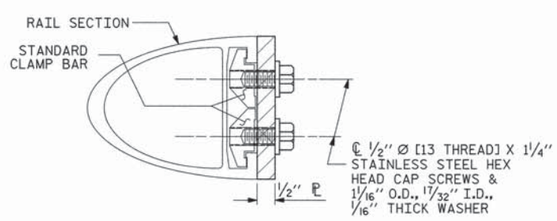

SECTION H-H (FIX)

FIXED

DETAILS FOR ATTACHING METAL RAIL TO END POST

NOTES

STRUCTURAL CONCRETE INSERT

THE STRUCTURAL CONCRETE INSERT ASSEMBLY SHALL CONSIST OF THE FOLLOWING COMPONENTS:

A. FERRULES SHALL BE MADE FROM STEEL MEETING THE REQUIREMENTS OF AASHTO M169, GRADE 12L14 AND SHALL HAVE A MINIMUM LENGTH OF THREADS OF 1½".

B. 1 - ¾" Ø X 1⅝" BOLT WITH WASHER. BOLT SHALL CONFORM TO THE REQUIREMENTS OF ASTM A307. BOLT AND WASHER SHALL BE GALVANIZED. (AT THE CONTRACTOR'S OPTION, STAINLESS STEEL BOLT AND WASHER MAY BE USED AS AN ALTERNATE FOR THE ¾" Ø X 1⅝" GALVANIZED BOLT AND WASHER. THEY SHALL CONFORM TO OR EXCEED THE MECHANICAL REQUIREMENTS OF ASTM A307. THE USE OF THIS ALTERNATE SHALL BE APPROVED BY THE ENGINEER.)

C. WIRE STRUT SHOWN IN THE CONCRETE INSERT ASSEMBLY DETAIL IS THE MINIMUM ALLOWABLE SIZE AND SHALL HAVE A MINIMUM TENSILE STRENGTH OF 100,000 PSI. AS AN OPTION, A 7/16" Ø WIRE STRUT WITH A MINIMUM TENSILE STRENGTH OF 90,000 PSI IS ACCEPTABLE.

NOTES

METAL RAIL TO END POST CONNECTION

THE METAL RAIL TO END POST CONNECTION SHALL CONSIST OF THE FOLLOWING COMPONENTS:

A. ½" PLATES SHALL CONFORM TO AASHTO M270 GRADE 36 AND SHALL BE GALVANIZED AFTER FABRICATION.

B. ¾" STRUCTURAL CONCRETE INSERT SHALL HAVE A WORKING LOAD SHEAR CAPACITY OF 4800 LBS. THE FERRULES SHALL ENGAGE A ¾"Ø X 1⅝" BOLT WITH 2" O.D. WASHER IN PLACE. THE ¾"Ø X 1⅝" BOLT SHALL HAVE N. C. THREADS.

C. CAP SCREWS FOR RAIL ATTACHMENT TO ANGLE SHALL CONFORM TO THE REQUIREMENTS OF ASTM F593 ALLOY 305 STAINLESS STEEL. CAP SCREWS TO BE CENTERED IN SLOTS AT 60°F.

D. STANDARD CLAMP BARS (SEE METAL RAIL SHEET).

E. ½" Ø PIPE SLEEVES (IF REQUIRED) TO BE GALVANIZED.

THE COST OF THE STANDARD CLAMP BARS AND CAP SCREWS USED IN THE METAL RAIL TO END POST CONNECTION SHALL BE INCLUDED IN THE UNIT CONTRACT PRICE BID FOR LINEAR FEET OF 1 OR 2 BAR METAL RAILS.

THE ¾" STRUCTURAL CONCRETE INSERT WITH BOLT SHALL BE ASSEMBLED IN THE SHOP.

THE COST OF THE ¾" STRUCTURAL CONCRETE INSERT ASSEMBLY, AND THE ½" PLATES COMPLETE IN PLACE SHALL BE INCLUDED IN THE VARIOUS PAY ITEMS.

THE CONTRACTOR, AT HIS OPTION, MAY USE AN ADHESIVE BONDING SYSTEM IN LIEU OF THE STRUCTURAL CONCRETE INSERT EMBEDDED IN THE END POST. IF THE ADHESIVE BONDING SYSTEM IS USED, THE ¾" Ø X 1⅝" BOLT WITH WASHER SHALL BE REPLACED WITH A ¾"Ø X 6½" BOLT AND 2" O.D. WASHER. ALL SPECIFICATIONS THAT APPLY TO THE ¾" Ø X 1⅝" BOLT SHALL APPLY TO THE ¾"Ø X 6 ½" BOLT. FIELD TESTING OF THE ADHESIVE BONDING SYSTEM IS NOT REQUIRED.

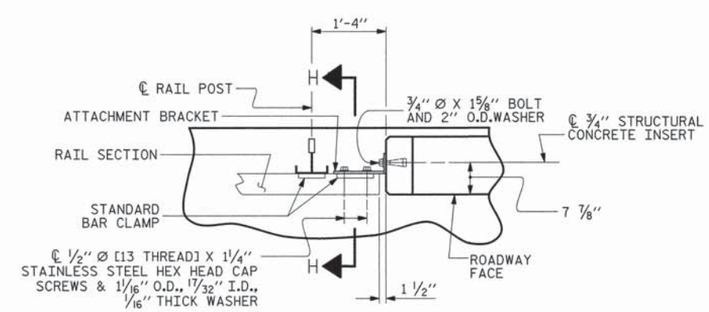

PLAN - RAIL AND END POST

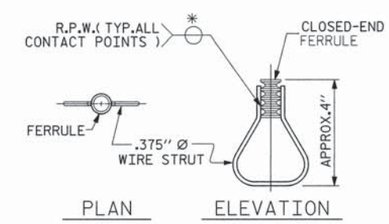

STRUCTURAL CONCRETE INSERT

*EACH WELDED ATTACHMENT OF WIRE TO FERRULE SHALL DEVELOP THE TENSILE STRENGTH OF THE WIRE.

PROJECT NO. 17BP.4.R.42

NASH COUNTY

STATION: 13+75.00 -L-

THIS STANDARD DRAWING REVIEWED & ADOPTED FOR USE AT THE REFERENCED LOCATION BY THE UNDERSIGNED:

NORTH CAROLINA PROFESSIONAL SEAL 19661 ENGINEER L. KEVIN AUSTIN 6/13/13

PLANS PREPARED BY:
MULKEY ENGINEERS & CONSULTANTS
PO Box 33127 RALEIGH, N.C. 27636
(919) 851-1912
(919) 851-1918 (FAX)
WWW.MULKEYINC.COM
NC LICENSE NO. C-1321

STATE OF NORTH CAROLINA
DEPARTMENT OF TRANSPORTATION
RALEIGH

STANDARD

RAIL POST SPACINGS AND END OF RAIL DETAILS

FOR ONE OR TWO BAR METAL RAILS

REVISIONS						SHEET NO.
NO.	BY:	DATE:	NO.	BY:	DATE:	18
1			3			TOTAL SHEETS
2			4			35

ASSEMBLED BY :	Z. H. BROWN	DATE :	5/8/13
CHECKED BY :	W. A. DAVIS	DATE :	5/14/13
DRAWN BY : FCJ 1/88	REV. 5/7/03	RWW/JTE	
CHECKED BY : CRK 3/89	REV. 5/1/06	TLA/GM	
	REV. 10/1/11	MAA/GM	

STD. NO. BMR2

6/13/2013 1:46:39 PM G:\Project\2009\2009213.52\CLIENT\Structures\Noah R4_2MB_01.dgn

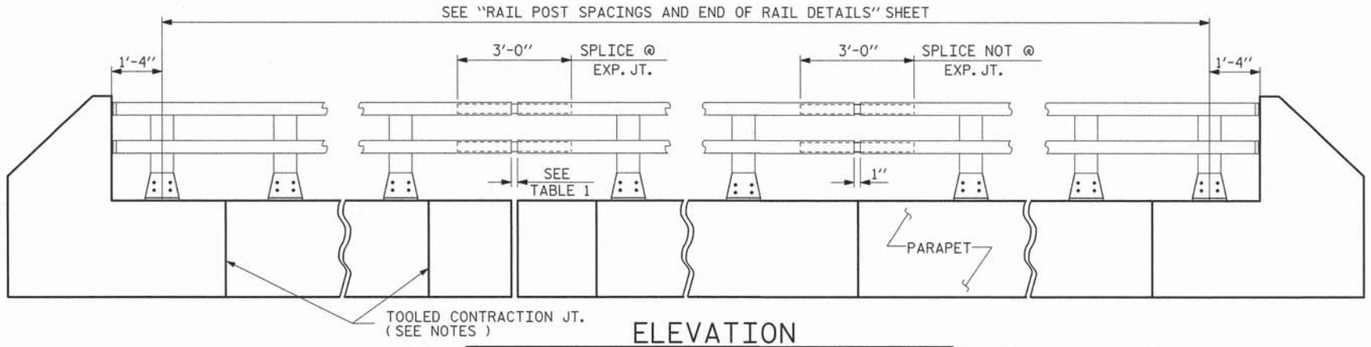

ELEVATION

NOTE : FOR ATTACHMENT OF METAL RAIL TO END POST, SEE STANDARD NO. BMR2.

TABLE 1	
℄ EXP. JT. @	RAIL OPENING
BENT No. 1	1½"
BENT No. 2	1½"

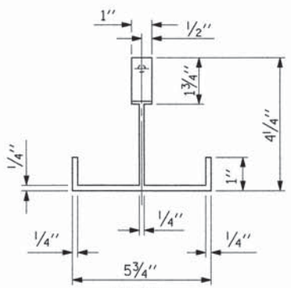

PLAN

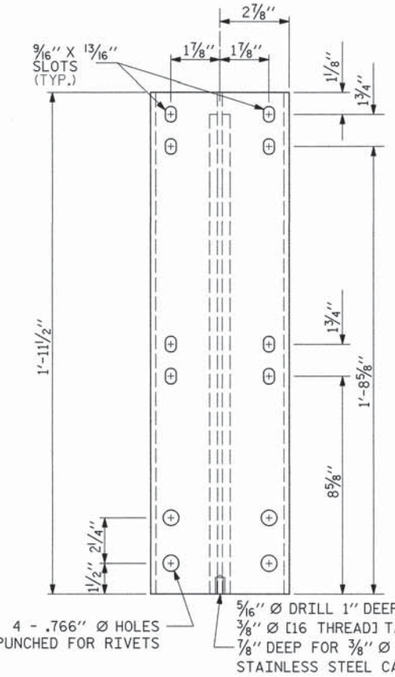

FRONT ELEVATION

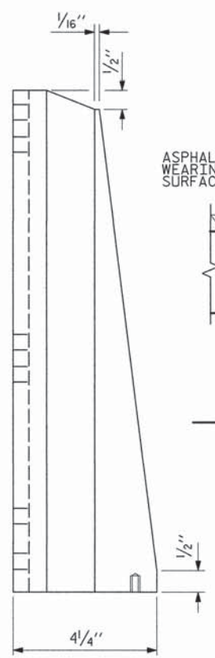

SIDE ELEVATION

DETAILS OF POST

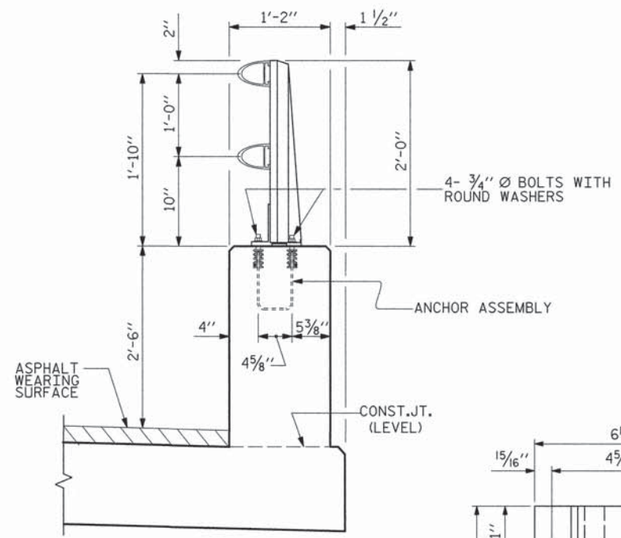

SECTION THRU PARAPET AND RAIL

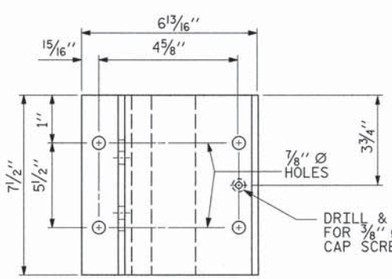

PLAN

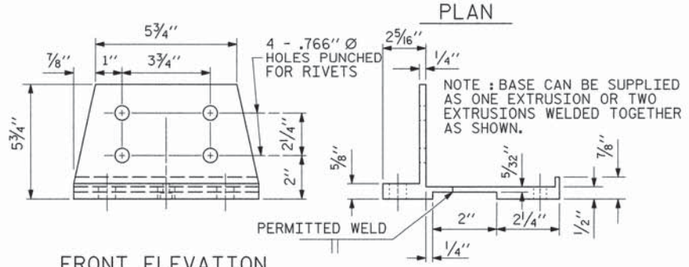

FRONT ELEVATION

SIDE ELEVATION

POST BASE DETAILS

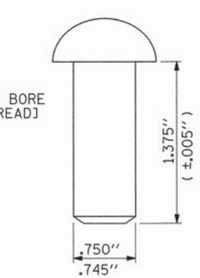

RIVET DETAIL

NOTES

ALUMINUM RAILS

MATERIAL FOR POSTS, BASES AND RAILS, EXPANSION BARS AND CLAMP BARS SHALL BE ASTM B-221 ALLOY 6061-T6.

MATERIAL FOR RIVETS SHALL BE ASTM B316 ALLOY 6061-T6. RIVETS SHALL BE STANDARD BUTTON HEAD AND CONE POINT COLD DRIVEN AS PER DRAWING.

THE BASE OF RAIL POSTS, OR ANY OTHER ALUMINUM SURFACE IN CONTACT WITH CONCRETE SHALL BE THOROUGHLY COATED WITH AN ALUMINUM IMPREGNATED CAULKING COMPOUND OF APPROVED QUALITY.

MATERIAL FOR SHIMS TO BE ASTM B209 ALLOY 6061-T6.

ANODIZING

ALUMINUM FOR POSTS, BASES, RAILS, EMPANSION BARS, CLAMP BARS, RIVETS, CAPS, SHIMS, ATTACHMENT BRACTES AND HOLD-DOWN PLATES SHALL BE ANODIZED. THE CONTRACTOR SHALL SUBMIT THREE (3) SETS OF ASTM B-221 6061-T6 ALUMINUM SAMPLES ANODIZED MEDIUM BRONZE, DARK BRONZE, AND EXTRA DARK BRONZE TO THE ENGINEER. THE ENGINEER SHALL SELECT FROM THE SAMPLES FURNISHED BY THE CONTRACTOR THE COLOR WHICH MOST CLOSELY MATCHES THE WEATHERED COLOR OF THE ATTACHED GUARDRAIL.

ANY DAMAGE TO THE ANODIZED SURFACE OF THE RAIL OR COMPONENTS DURING CONSTRUCTION SHALL BE REPAIRED ACCORDING TO THE MANUFACTURER'S INSTRUCTIONS AT THE DIRECTION OF THE ENGINEER AND AT THE CONTRACTOR'S EXPENSE.

AFTER A SHADE OF BRONZE HAS BEEN SELECTED FOR THE RAILING, THE CONTRACTOR SHALL SUBMIT A SAMPLE OF COMPATIBLE EXTERIOR ACRYLIC HOUSE PAINT TO THE ENGINEER. THIS PAINT SHALL MATCH THE ANODIZED RAIL COLOR AS CLOSELY AS POSSIBLE. AFTER ERECTION OF THE ANODIZED ALUMINUM RAILING, ALL EXPOSED ANCHOR BOLTS, NUTS, WASHERS, MACHINE SCREWS, CAP SCREWS, BOLTS, AND BUILT UP ANGLES SHALL BE COATED WITH TWO COATS OF THIS PAINT.

GENERAL NOTES

RAILING SHALL BE CONTINUOUS FROM END POST TO END POST OF BRIDGE. EACH JOINT IN RAIL LENGTH SHALL BE SPLICED AS DETAILED. PANEL LENGTHS OF RAIL SHALL BE ATTACHED TO A MINIMUM OF THREE POSTS.

FOR END OF RAIL TO CLEAR FACE OF CONCRETE END POST DIMENSION, SEE STANDARD NO. BMR2.

CAP SCREWS SHALL BE ASTM F593 ALLOY 305 STAINLESS STEEL. WASHERS SHALL MEET THE REQUIREMENTS OF ASTM F844 EXCEPT THEY SHALL BE MADE FROM ALLOY 304 STAINLESS STEEL.

CERTIFIED MILL REPORTS ARE REQUIRED FOR RAILS AND POSTS. SHOP INSPECTION IS NOT REQUIRED.

METAL RAIL POSTS SHALL BE SET NORMAL TO CURB GRADE.

METHOD OF MEASUREMENT FOR METAL RAILS: FOR LENGTH OF METAL RAILS TO BE PAID FOR, SEE THE STANDARD SPECIFICATIONS.

CURVED RAIL USAGE: WHERE RAILS ARE TO BE USED ON BRIDGES ON HORIZONTAL AND/OR VERTICAL CURVATURE THE CONTRACTOR MAY, AT HIS OPTION, HAVE THE REQUIRED CURVATURE IN THE RAIL FORMED IN THE SHOP OR IN THE FIELD. IN EITHER EVENT, THE RAIL SHALL CONFORM WITHOUT BUCKLING OR KINKING TO THE REQUIRED CURVATURE IN A UNIFORM MANNER ACCEPTABLE TO THE ENGINEER.

TO INSURE FUTURE IDENTIFICATION OF THE FABRICATOR, A PERMANENT IDENTIFYING MARK SHALL BE PLACED ON EACH POST. THE METHOD OF MARKING AND LOCATION SHALL BE SUCH THAT IT DOES NOT DETRACT FROM THE APPEARANCE OF THE POST, BUT REMAINS VISIBLE AFTER RAIL PLACEMENT.

SHIMS SHALL BE USED AS NECESSARY FOR POST ALIGNMENT.

ALLOY 6351-T5 MAY BE SUBSTITUTED FOR ALLOY 6061-T6 WHERE APPLICABLE.

MINOR VARIATIONS IN DETAILS OF METAL RAIL WILL BE CONSIDERED. DETAILS OF SUCH VARIATIONS, IF DESIRED, SHALL BE SUBMITTED FOR APPROVAL.

GROOVED CONTRACTION JOINTS, ½" IN DEPTH, SHALL BE TOOLED IN ALL EXPOSED FACES OF THE PARAPET AND IN ACCORDANCE WITH ARTICLE 825-10(B) OF THE STANDARD SPECIFICATIONS. A CONTRACTION JOINT SHALL BE LOCATED AT EACH THIRD POINT BETWEEN PARAPET EXPANSION JOINTS. ONLY ONE CONTRACTION JOINT IS REQUIRED AT MIDPOINT OF PARAPET SEGMENTS LESS THAN 20 FEET IN LENGTH AND NO CONTRACTION JOINTS ARE REQUIRED FOR THOSE SEGMENTS LESS THAN 10 FEET IN LENGTH.

PAY LENGTH = 365.5 LIN. FT.

PROJECT NO. 17BP.4.R.42

NASH COUNTY

STATION: 13+75.00 -L-

SHEET 1 OF 2

STATE OF NORTH CAROLINA
DEPARTMENT OF TRANSPORTATION
RALEIGH

STANDARD

2 BAR METAL RAIL

THIS STANDARD DRAWING REVIEWED & ADOPTED FOR USE AT THE REFERENCED LOCATION BY THE UNDERSIGNED:

NORTH CAROLINA PROFESSIONAL SEAL ENGINEER 19661 L. KEVIN AUSTIN 6/13/13

PLANS PREPARED BY:
MULKEY ENGINEERS & CONSULTANTS
PO Box 33127 Raleigh, N.C. 27636
(919) 851-1912
(919) 851-1918 (FAX)
WWW.MULKEYINC.COM
NO LICENSE NO. C-1021

ASSEMBLED BY :	Z. H. BROWN	DATE :	5/8/13
CHECKED BY :	W. A. DAVIS	DATE :	5/14/13
DRAWN BY :	EEM 6/94	REV. 5/7/03R	RWW/JTE
CHECKED BY :	RGW 6/94	REV. 5/1/06	TLA/GM
		REV. 10/1/11	MAA/GM

REVISIONS								SHEET NO.
NO.	BY:	DATE:	NO.	BY:	DATE:			19
1			3					TOTAL SHEETS
2			4					35

6/13/2013 2:24:49 PM G:\Project\2009\2009923.5\CLIENT\Structures\Nash 194_2MR_02.dgn

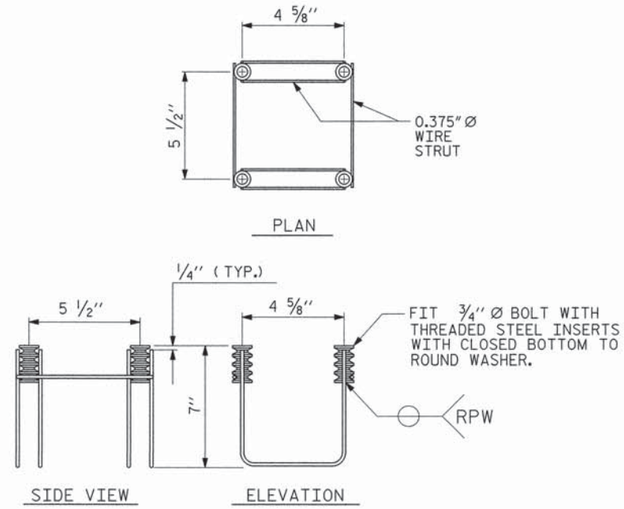

4-BOLT METAL RAIL ANCHOR ASSEMBLY

(62 ASSEMBLIES REQUIRED)

NOTES

STRUCTURAL CONCRETE ANCHOR ASSEMBLY

THE STRUCTURAL CONCRETE ANCHOR ASSEMBLY SHALL CONSIST OF THE FOLLOWING COMPONENTS :

A. FERRULES SHALL BE MADE FROM STEEL MEETING THE REQUIREMENTS OF AASHTO M169, GRADE 12L14 AND SHALL HAVE A MINIMUM LENGTH OF THREADS OF 2" FOR 3/4" FERRULES.

B. 4 - 3/4" Ø X 2 1/2" BOLTS WITH WASHERS. BOLTS SHALL CONFORM TO THE REQUIREMENTS OF ASTM A307. BOLTS AND WASHERS SHALL BE ANODIZED. AT THE CONTRACTOR'S OPTION, STAINLESS STEEL BOLTS AND WASHERS MAY BE USED AS AN ALTERNATE FOR THE 3/4" Ø X 2 1/2" ANODIZED BOLTS AND WASHERS. THEY SHALL CONFORM TO OR EXCEED THE MECHANICAL REQUIREMENTS OF ASTM A307. THE USE OF THIS ALTERNATE SHALL BE APPROVED BY THE ENGINEER.

C. WIRE STRUT SHOWN IN THE CONCRETE ANCHOR ASSEMBLY DETAIL IS THE MINIMUM ALLOWABLE SIZE AND SHALL HAVE A MINIMUM TENSILE STRENGTH OF 100,000 PSI. AS AN OPTION, A 7/16" Ø WIRE STRUT WITH A MINIMUM TENSILE STRENGTH OF 90,000 PSI IS ACCEPTABLE.

D. THE METAL RAIL ANCHOR ASSEMBLIES TO BE HOT DIPPED GALVANIZED TO CONFORM TO REQUIREMENTS OF AASHTO M111.

E. THE COST OF THE METAL RAIL ANCHOR ASSEMBLY WITH BOLTS AND WASHERS COMPLETE IN PLACE SHALL BE INCLUDED IN THE PRICE BID FOR LINEAR FEET OF METAL RAIL.

F. BOLTS TO BE TIGHTENED ONE-HALF TURN WITH A WRENCH FROM A FINGER-TIGHT POSITION.

THE CONTRACTOR MAY USE ADHESIVELY ANCHORED ANCHOR BOLTS IN PLACE OF THE METAL RAIL ANCHOR ASSEMBLY. LEVEL ONE FIELD TESTING IS REQUIRED, AND THE YIELD LOAD OF THE 3/4" Ø BOLT IS 10 KIPS. FOR ADHESIVELY ANCHORED ANCHOR BOLTS OR DOWELS, SEE THE STANDARD SPECIFICATIONS.

WHEN ADHESIVELY ANCHORED ANCHOR BOLTS ARE USED, BOLTS SHALL MEET THE REQUIREMENTS OF ASTM F593 ALLOY 304 STAINLESS STEEL WITH MINIMUM 75,000 PSI ULTIMATE STRENGTH. NUTS SHALL MEET THE REQUIREMENTS OF ASTM F594 ALLOY 304 STAINLESS STEEL AND WASHERS SHALL MEET THE REQUIREMENTS OF ASTM F844 EXCEPT THEY SHALL BE MADE FROM ALLOY 304 STAINLESS STEEL.

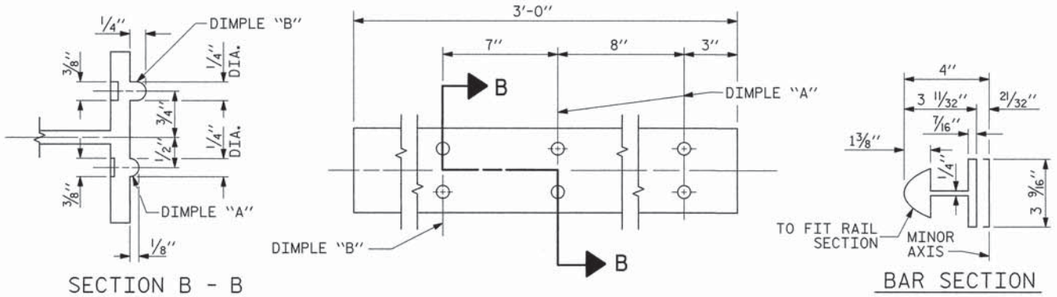

EXPANSION BAR DETAILS

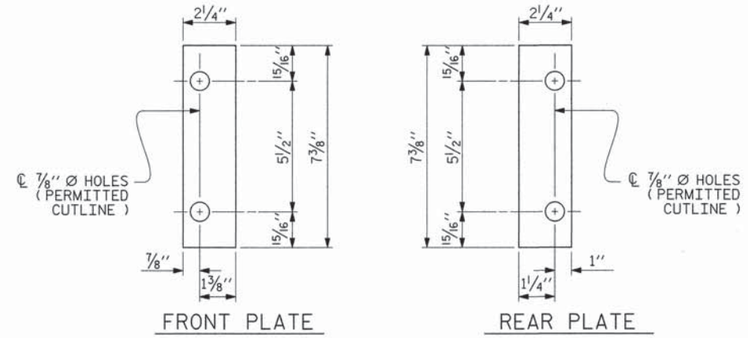

SHIM DETAILS

NOTE :
SHIMS MAY BE CUT ALONG PERMITTED CUTLINE OR SLOTTED TO EDGE OF PLATE TO FACILITATE PLACEMENT.

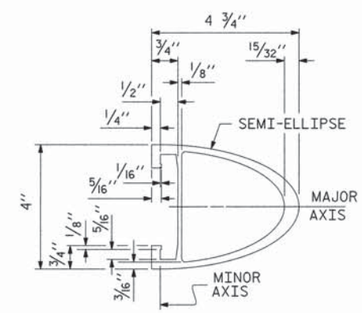

RAIL SECTION

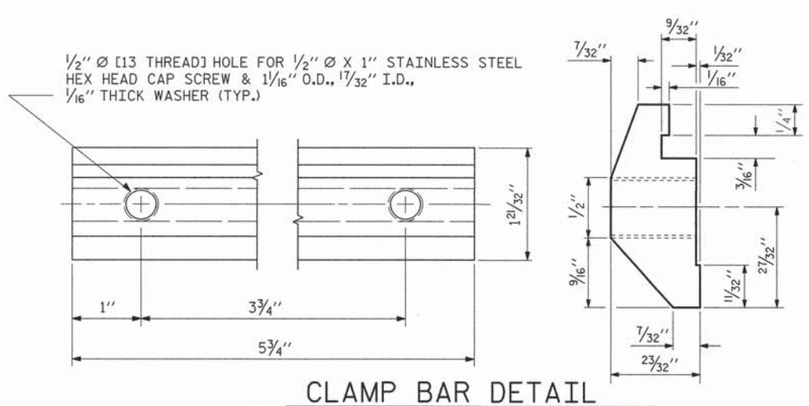

CLAMP BAR DETAIL

(4 REQUIRED PER POST)

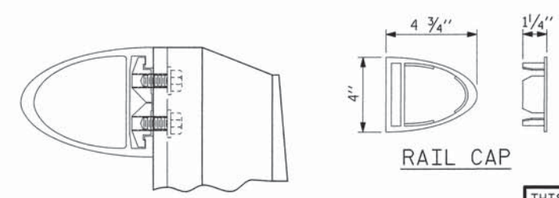

CLAMP ASSEMBLY

PROJECT NO. 17BP.4.R.42

NASH COUNTY

STATION: 13+75.00 -L-

SHEET 2 OF 2

THIS STANDARD DRAWING REVIEWED & ADOPTED FOR USE AT THE REFERENCED LOCATION BY THE UNDERSIGNED:

NORTH CAROLINA PROFESSIONAL SEAL ENGINEER 19661 KEVIN AUSTIN 6/13/13

PLANS PREPARED BY:

MULKEY ENGINEERS & CONSULTANTS
PO Box 33127
Raleigh, N.C. 27636
(919) 851-1912
(919) 851-1918 (FAX)
WWW.MULKEYINC.COM
NC LICENSE NO. C-1021

STATE OF NORTH CAROLINA
DEPARTMENT OF TRANSPORTATION
RALEIGH

STANDARD

2 BAR METAL RAIL

REVISIONS								SHEET NO.
NO.	BY:	DATE:	NO.	BY:	DATE:			20
1			3					TOTAL SHEETS
2			4					35

ASSEMBLED BY : Z. H. BROWN		DATE : 5/8/13	
CHECKED BY : W. A. DAVIS		DATE : 5/14/13	
DRAWN BY : EEM 6/94	REV. 8/16/99	MAB/LES	
CHECKED BY : RGW 6/94	REV. 5/1/06R	KMM/GM	
	REV. 10/1/11	MAA/GM	

STD. NO. BMR4

6/12/2013 3:16:46 PM Q:\Project\2009\2009R23.52\CLIENT\Structures\Nash R4_2MR_01.dgn

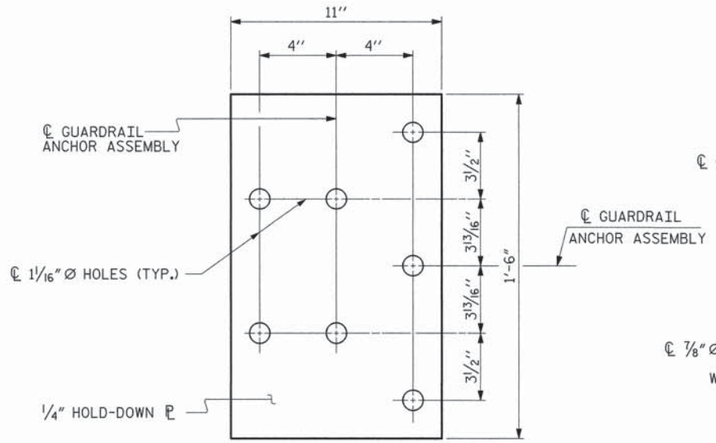

PLAN

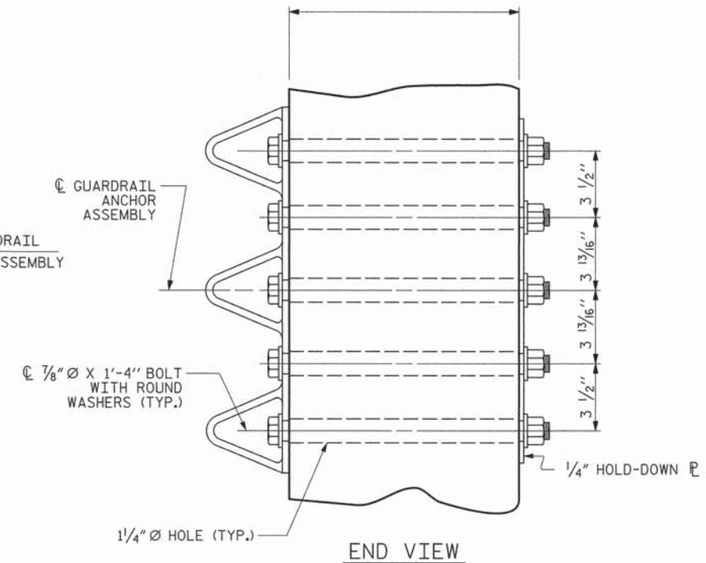

END VIEW

GUARDRAIL ANCHOR ASSEMBLY DETAILS

NOTES

THE GUARDRAIL ANCHOR ASSEMBLY SHALL CONSIST OF A 1/4" HOLD DOWN PLATE AND 7 - 7/8" Ø BOLTS WITH NUTS AND WASHERS.

THE HOLD-DOWN PLATE SHALL CONFORM TO AASHTO M270 GRADE 36. AFTER FABRICATION, THE HOLD-DOWN PLATE SHALL BE ANONIZED. FOR DETAILS, SEE "2 BAR METAL RAIL" PLAN SHEET 1 OF 2.

BOLTS SHALL CONFORM TO THE REQUIREMENTS OF ASTM A307 AND NUTS SHALL CONFORM TO THE REQUIREMENTS OF AASHTO M291. BOLTS, NUTS AND WASHERS SHALL BE GALVANIZED. AT THE CONTRACTOR'S OPTION, STAINLESS STEEL BOLTS, NUTS AND WASHERS MAY BE USED AS AN ALTERNATE FOR THE 7/8" Ø GALVANIZED BOLTS, NUTS AND WASHERS. THEY SHALL CONFORM TO OR EXCEED THE MECHANICAL REQUIREMENTS OF ASTM A307. THE USE OF THIS ALTERNATE SHALL BE APPROVED BY THE ENGINEER.

THE GUARDRAIL ANCHOR ASSEMBLY IS REQUIRED AT ALL POINTS WHERE APPROACH GUARDRAIL IS TO BE ATTACHED TO THE END OF THE PARAPET. FOR POINTS OF ATTACHMENT, SEE SKETCH.

AFTER INSTALLATION, THE EXPOSED THREAD OF THE BOLT SHALL BE BURRED WITH A SHARP POINTED TOOL.

THE COST OF THE GUARDRAIL ANCHOR ASSEMBLIES WITH BOLTS, NUTS AND WASHERS COMPLETE IN PLACE, SHALL BE INCLUDED IN THE VARIOUS PAY ITEMS.

THE VERTICAL REINFORCING BARS MAY BE SHIFTED SLIGHTLY IN THE END POST TO CLEAR ASSEMBLY BOLTS.

THE 1 1/4" Ø HOLES SHALL BE FORMED OR DRILLED WITH A CORE BIT. IMPACT TOOLS WILL NOT BE PERMITTED. ANY CONCRETE DAMAGED BY THIS WORK SHALL BE REPAIRED TO THE SATISFACTION OF THE ENGINEER.

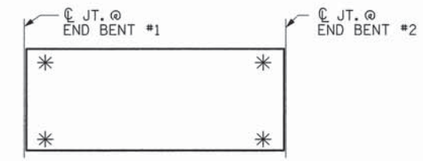

SKETCH SHOWING POINTS OF ATTACHMENT

✳ LOCATION OF GUARDRAIL ATTACHMENT

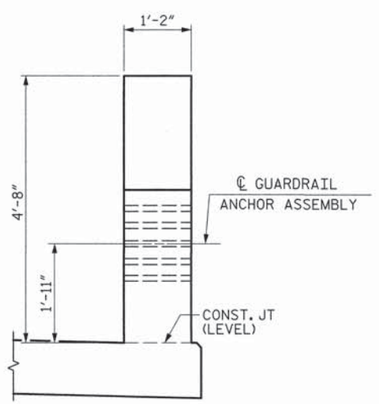

END VIEW
(TWO BAR METAL RAIL)

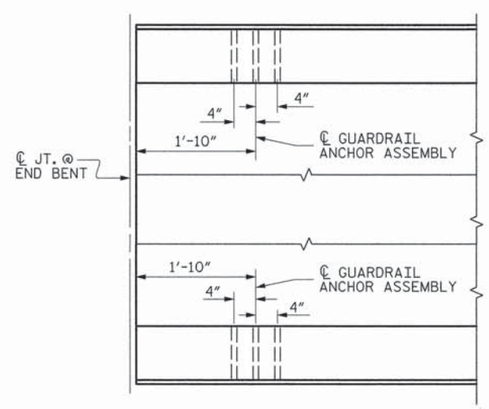

PLAN

LOCATION OF GUARDRAIL ANCHOR AT END POST

PROJECT NO. 17BP.4.R.42
NASH COUNTY
STATION: 13+75.00 -L-

THIS STANDARD DRAWING REVIEWED & ADOPTED FOR USE AT THE REFERENCED LOCATION BY THE UNDERSIGNED:

NORTH CAROLINA PROFESSIONAL ENGINEER 19661 L. KEVIN AUSTIN 6/13/13

PLANS PREPARED BY:
MULKEY ENGINEERS & CONSULTANTS
PO BOX 33127 RALEIGH, NC 27636
(919) 851-1912
(919) 851-1918 (FAX)
WWW.MULKEYINC.COM
NC LICENSE NO. C-1321

STATE OF NORTH CAROLINA
DEPARTMENT OF TRANSPORTATION
RALEIGH

STANDARD
GUARDRAIL ANCHORAGE DETAILS FOR METAL RAILS

REVISIONS						SHEET NO.
NO.	BY:	DATE:	NO.	BY:	DATE:	21
1			3			TOTAL SHEETS
2			4			35

STD. NO. GRA3

ASSEMBLED BY : Z. H. BROWN		DATE : 5/9/13	
CHECKED BY : W. A. DAVIS		DATE : 5/14/13	
DRAWN BY : MAA	5/10	ADDED 5/6/10	
CHECKED BY : GM	5/10	REV. 10/1/11	MAA/GM
		REV. 12/5/11	MAA/GM

6/13/2013 1:39:19 PM G:\Project\2009\200923.53\CLIENT\Structures\Nash R4.2MR.04.dgn

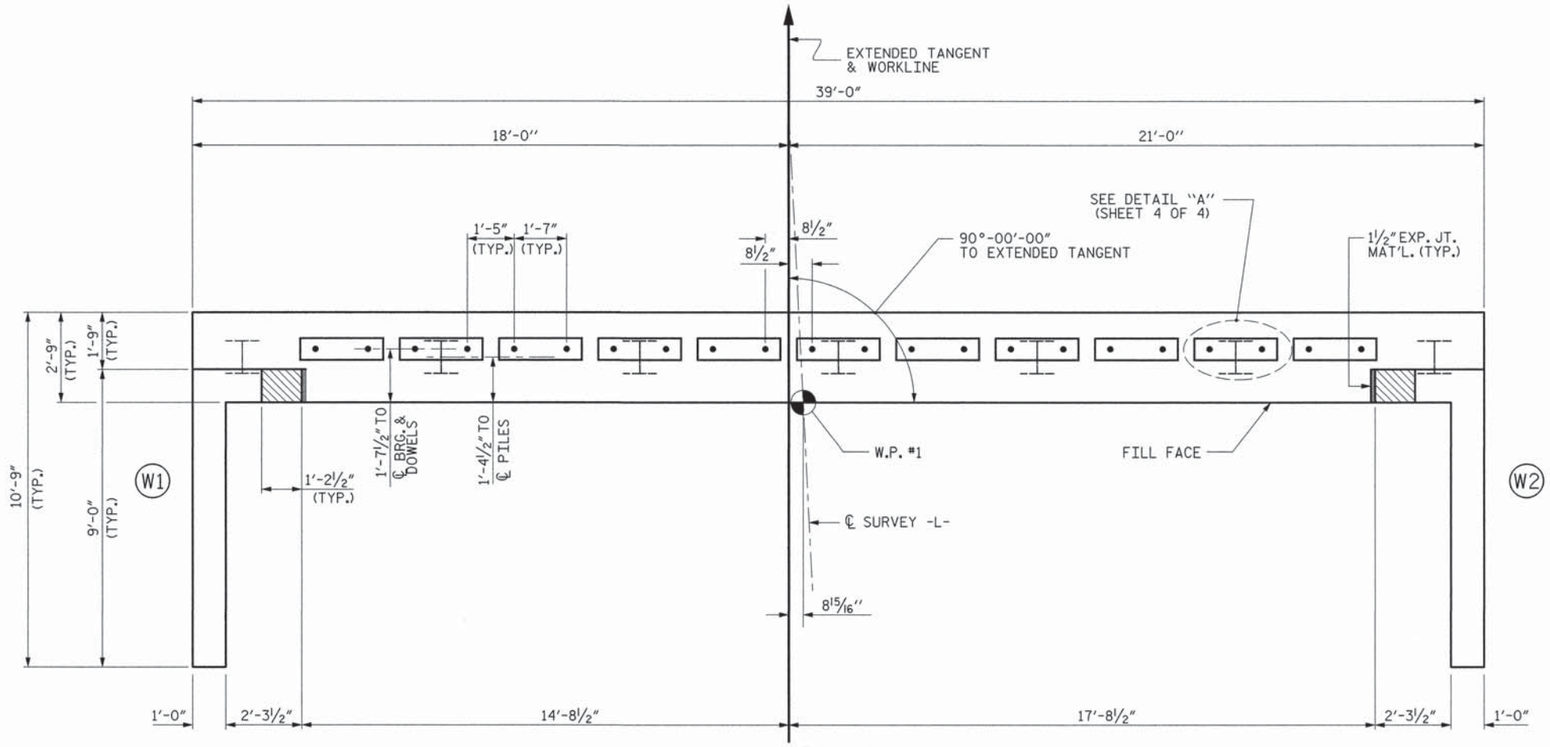

PLAN

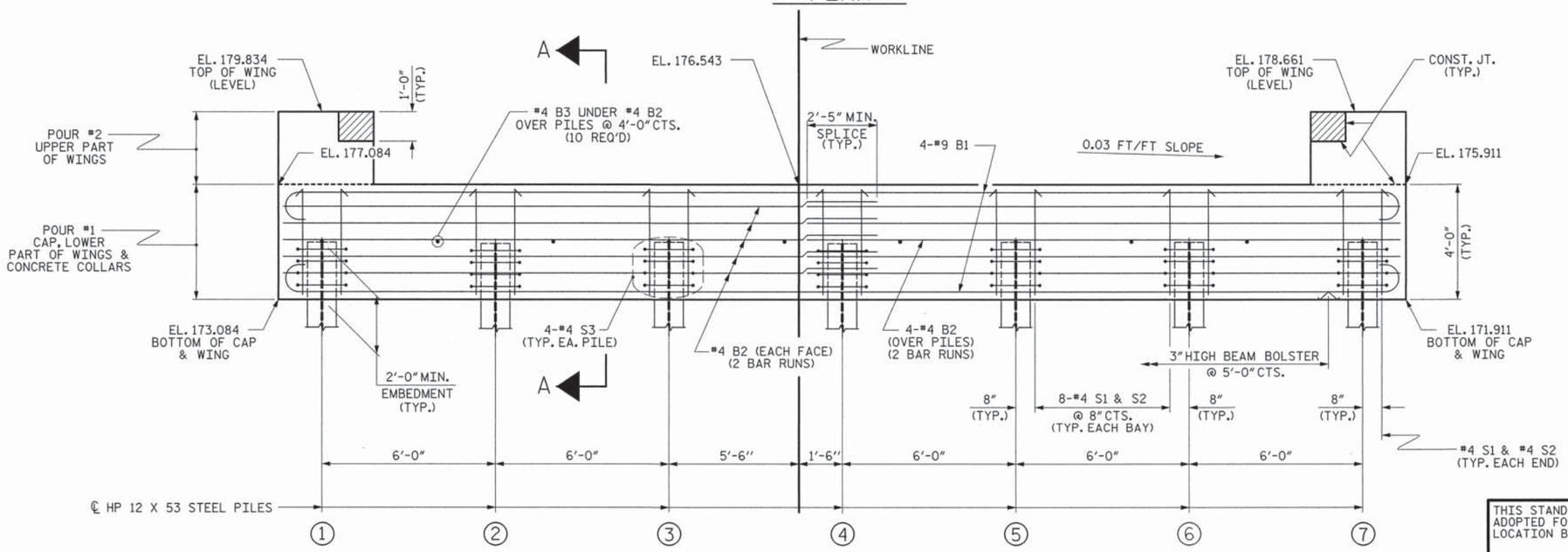

ELEVATION

WINGS NOT SHOWN FOR CLARITY.
FOR SECTION A-A, SEE SHEET 4 OF 4.
CONCRETE COLLARS FOR STEEL PILES NOT SHOWN IN PLAN AND ELEVATION VIEWS FOR CLARITY.
SEE "CORROSION PROTECTION FOR STEEL PILES DETAIL", SHEET 4 OF 4.

NOTES

STIRRUPS IN CAP MAY BE SHIFTED AS NECESSARY TO CLEAR DOWELS.

THE CONCRETE IN THE SHADED AREA OF THE WING SHALL BE POURED AFTER THE VERTICAL CONCRETE BARRIER RAIL IS CAST IF SLIP FORMING IS USED.

FOR PILE SPLICE DETAILS, SEE SHEET 4 OF 4.

FOR WING DETAILS, SEE SHEET 3 OF 4.

TOP OF PILE ELEVATIONS	
1	175.039
2	174.858
3	174.678
4	174.498
5	174.317
6	174.137
7	173.956

PROJECT NO. 17BP.4.R.42
NASH COUNTY
STATION: 13+75.00 -L-

SHEET 1 OF 4

STATE OF NORTH CAROLINA
DEPARTMENT OF TRANSPORTATION
RALEIGH

SUBSTRUCTURE

END BENT No. 1

ASSEMBLED BY : Z. H. BROWN	DATE : 11/19/12
CHECKED BY : W. A. DAVIS	DATE : 5/14/13
DRAWN BY : WJH 12/11	
CHECKED BY : AAC 12/11	

PLANS PREPARED BY:
MULKEY ENGINEERS & CONSULTANTS
PO Box 33127 Raleigh, N.C. 27636
(919) 851-1912
(919) 851-1918 (FAX)
WWW.MULKEYINC.COM
NC LICENSE NO. C-1321

THIS STANDARD DRAWING REVIEWED & ADOPTED FOR USE AT THE REFERENCED LOCATION BY THE UNDERSIGNED:

NORTH CAROLINA PROFESSIONAL SEAL 19661 ENGINEER L. KEVIN AUSTIN 6/13/13

REVISIONS								SHEET NO.
NO.	BY:	DATE:	NO.	BY:	DATE:			22
1			3					TOTAL SHEETS
2			4					35

STD. NO. EB_33_90S4

6/12/2013 4:15:12 PM G:\Project\2009\2009215.STC\CLIENT\Structures\Nash IM4.5D EL01.dgn

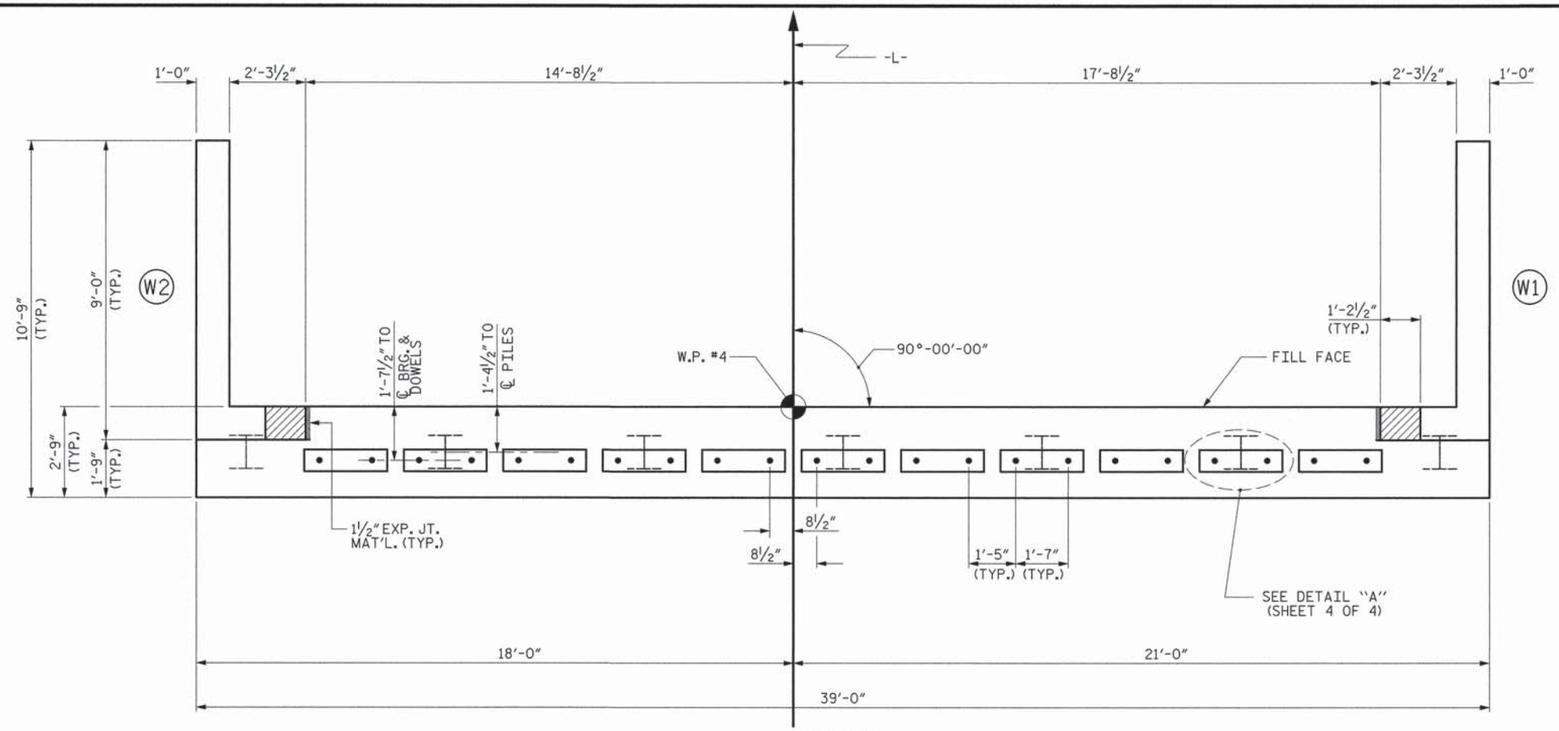

PLAN

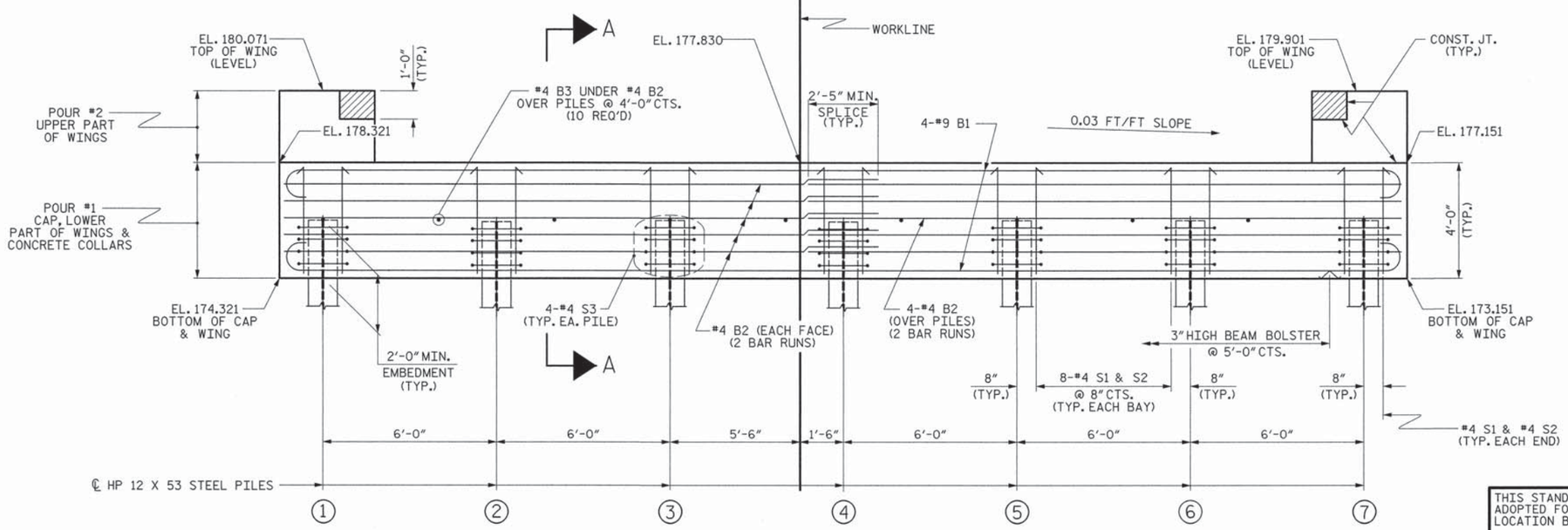

ELEVATION

WINGS NOT SHOWN FOR CLARITY.
FOR SECTION A-A, SEE SHEET 4 OF 4.
CONCRETE COLLARS FOR STEEL PILES NOT SHOWN IN PLAN AND ELEVATION VIEWS FOR CLARITY.
SEE "CORROSION PROTECTION FOR STEEL PILES DETAIL", SHEET 4 OF 4.

NOTES

STIRRUPS IN CAP MAY BE SHIFTED AS NECESSARY TO CLEAR DOWELS.

THE CONCRETE IN THE SHADED AREA OF THE WING SHALL BE POURED AFTER THE VERTICAL CONCRETE BARRIER RAIL IS CAST IF SLIP FORMING IS USED.

FOR PILE SPLICE DETAILS, SEE SHEET 4 OF 4.

FOR WING DETAILS, SEE SHEET 3 OF 4.

TOP OF PILE ELEVATIONS	
1	176.276
2	176.096
3	175.916
4	175.736
5	175.556
6	175.376
7	175.196

PROJECT NO. 17BP.4.R.42
NASH COUNTY
STATION: 13+75.00 -L-

SHEET 2 OF 4

STATE OF NORTH CAROLINA
DEPARTMENT OF TRANSPORTATION
RALEIGH

SUBSTRUCTURE

END BENT No. 2

ASSEMBLED BY : Z. H. BROWN DATE : 11/19/12
CHECKED BY : W. A. DAVIS DATE : 5/14/13
DRAWN BY : WJH 12/11
CHECKED BY : AAC 12/11

PLANS PREPARED BY:
MULKEY ENGINEERS & CONSULTANTS
PO Box 33127 Raleigh, N.C. 27636
(919) 851-1912
(919) 851-1918 (FAX)
WWW.MULKEYINC.COM
NC LICENSE NO. C-1021

THIS STANDARD DRAWING REVIEWED & ADOPTED FOR USE AT THE REFERENCED LOCATION BY THE UNDERSIGNED:

NORTH CAROLINA PROFESSIONAL SEAL 19661 ENGINEER KEVIN AUSTIN
6/12/13

REVISIONS							SHEET NO.
NO.	BY:	DATE:	NO.	BY:	DATE:		23
1			3				TOTAL SHEETS
2			4				35

STD. NO. EB_33_90S4

6/6/2013 2:49:31 PM G:\Project\2009\300923.52\CLIENT\Structures\Nash (R4.5D.E2.0).dgn

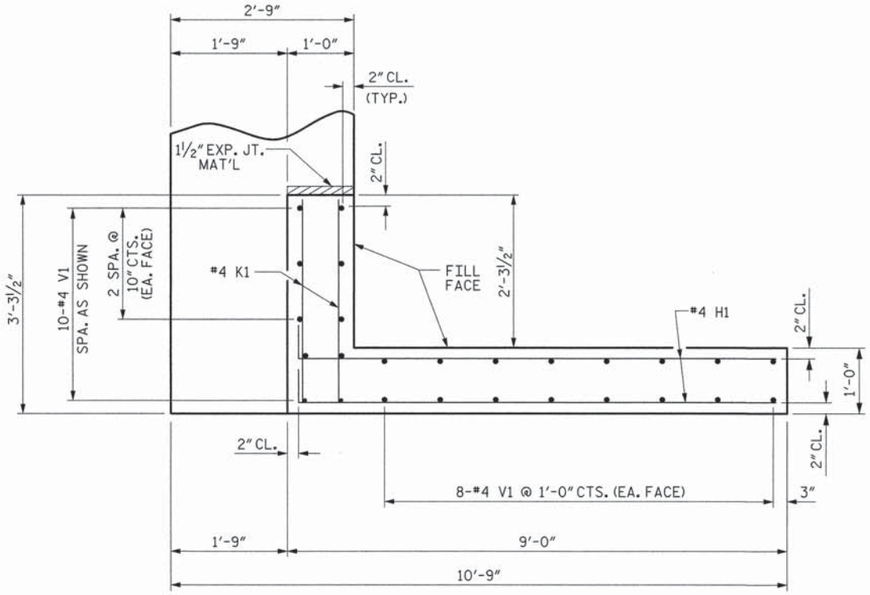

PLAN OF WING (W1)

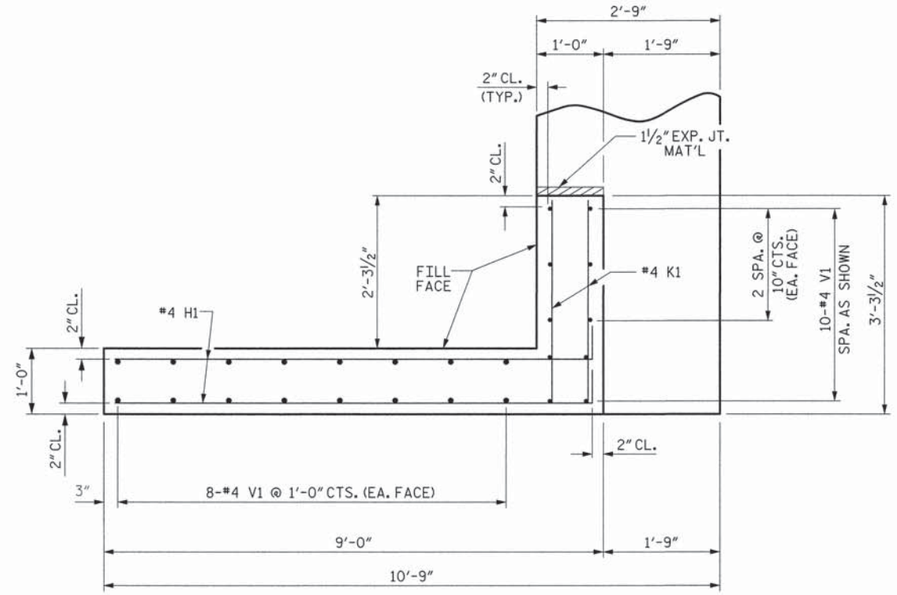

PLAN OF WING (W2)

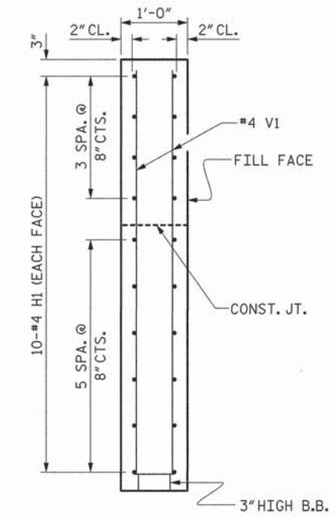

SECTION X-X

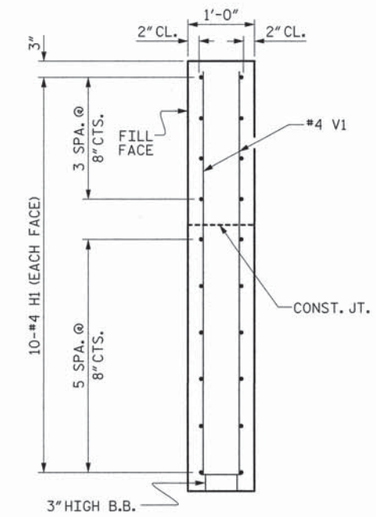

SECTION Y-Y

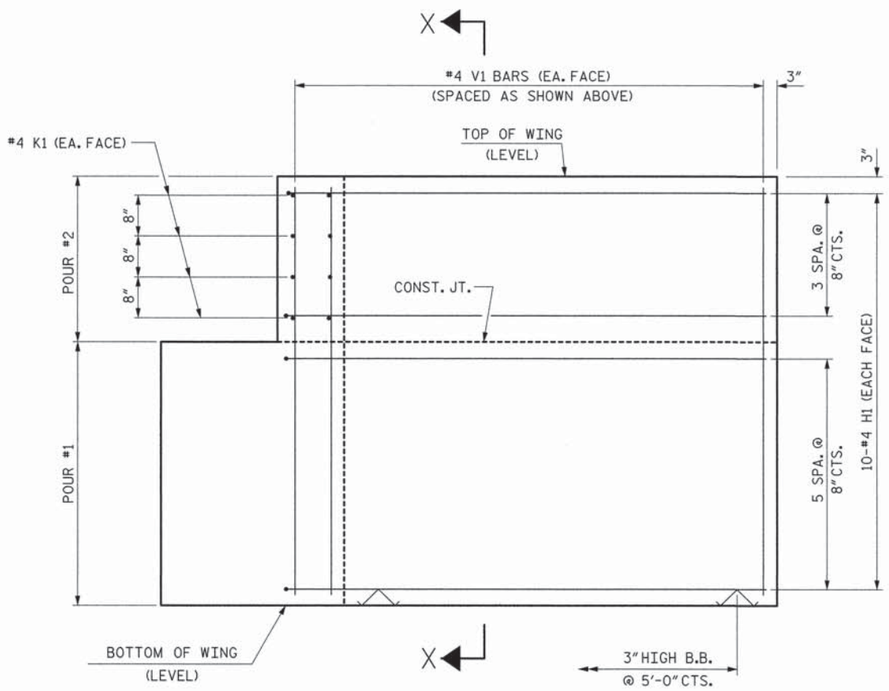

ELEVATION OF WING (W1)

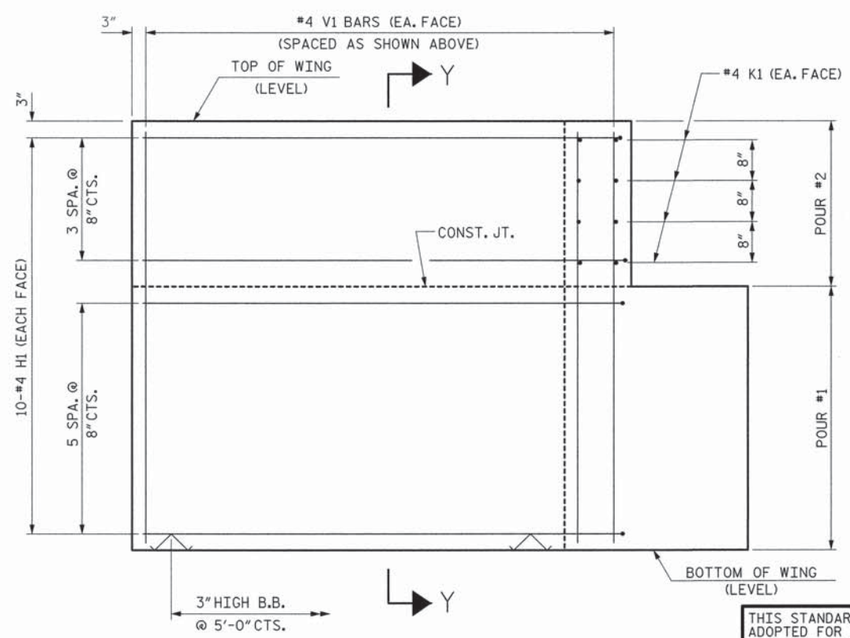

ELEVATION OF WING (W2)

WING DETAILS

PROJECT NO. 17BP.4.R.42

NASH COUNTY

STATION: 13+75.00 -L-

SHEET 3 OF 4

STATE OF NORTH CAROLINA
DEPARTMENT OF TRANSPORTATION
RALEIGH

SUBSTRUCTURE
END BENT
WING DETAILS

THIS STANDARD DRAWING REVIEWED & ADOPTED FOR USE AT THE REFERENCED LOCATION BY THE UNDERSIGNED:

NORTH CAROLINA PROFESSIONAL ENGINEER 19661 L. KEVIN AUSTIN 6/12/13

PLANS PREPARED BY:
MULKEY ENGINEERS & CONSULTANTS
PO Box 33127
RALEIGH, N.C. 27636
(919) 851-1912
(919) 851-1918 (FAX)
WWW.MULKEYINC.COM
NO LICENSE NO. C-1021

REVISIONS						SHEET NO.
NO.	BY:	DATE:	NO.	BY:	DATE:	24
1			3			TOTAL SHEETS
2			4			35

ASSEMBLED BY : Z. H. BROWN DATE : 11/19/12
CHECKED BY : W. A. DAVIS DATE : 5/14/13
DRAWN BY : WJH 12/11
CHECKED BY : AAC 12/11

STD. NO. EB_33_90S4

6/11/2013 2:50:05 PM G:\Project\2009\2009123.52\CLIENT\Structures\Nash 194_SD_EB2_02.dgn

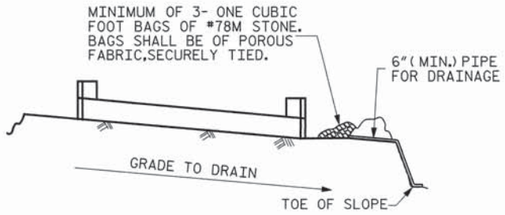

BAGGED STONE AND PIPE SHALL BE PLACED IMMEDIATELY AFTER COMPLETION OF END BENT EXCAVATION. PIPE MAY BE EITHER CONCRETE, CORRUGATED STEEL, CORRUGATED ALUMINUM ALLOY, OR CORRUGATED PLASTIC. PERFORATED PIPE WILL NOT BE ALLOWED.

BAGGED STONE SHALL REMAIN IN PLACE UNTIL THE ENGINEER DIRECTS THAT IT BE REMOVED. THE CONTRACTOR SHALL REMOVE AND DISPOSE OF SILT ACCUMULATIONS AT BAGGED STONE WHEN SO DIRECTED BY THE ENGINEER. BAGS SHALL BE REMOVED AND REPLACED WHENEVER THE ENGINEER DETERMINES THAT THEY HAVE DETERIORATED AND LOST THEIR EFFECTIVENESS.

NO SEPARATE PAYMENT WILL BE MADE FOR THIS WORK AND THE ENTIRE COST OF THIS WORK SHALL BE INCLUDED IN THE UNIT CONTRACT PRICE BID FOR THE SEVERAL PAY ITEMS.

TEMPORARY DRAINAGE AT END BENT

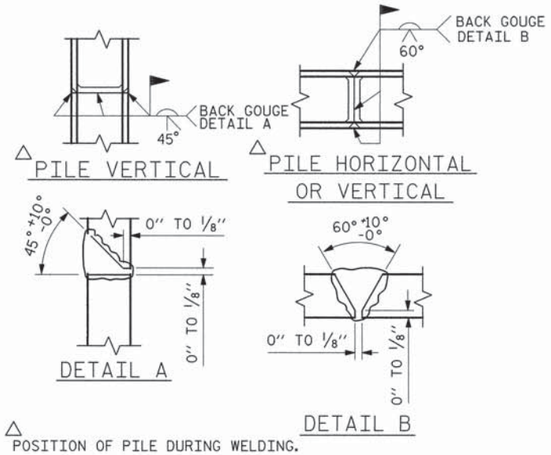

△ POSITION OF PILE DURING WELDING.

PILE SPLICE DETAILS

BAR TYPES

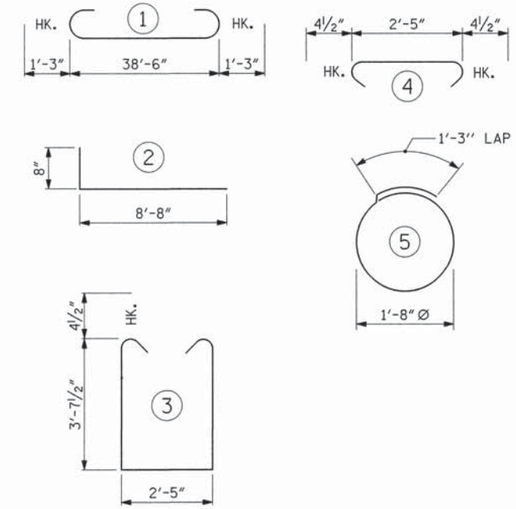

ALL BAR DIMENSIONS ARE OUT TO OUT.

END BENT No. 1	END BENT No. 2
HP 12 X 53 STEEL PILES	HP 12 X 53 STEEL PILES
NO: 7 LIN. FT.= 123	NO: 7 LIN. FT.= 123
PILE EXCAVATION IN SOIL LIN. FT.= 95	PILE EXCAVATION IN SOIL LIN. FT.= 80
PILE EXCAVATION NOT IN SOIL LIN. FT.= 28	PILE EXCAVATION NOT IN SOIL LIN. FT.= 28

BILL OF MATERIAL FOR ONE END BENT

BAR	NO.	SIZE	TYPE	LENGTH	WEIGHT
B1	8	#9	1	41'-0"	1115
B2	28	#4	STR	20'-7"	385
B3	10	#4	STR	2'-5"	16
D1	22	#6	STR	1'-6"	50
H1	40	#4	2	9'-4"	249
K1	16	#4	STR	2'-11"	31
S1	50	#4	3	10'-5"	348
S2	50	#4	4	3'-2"	106
S3	28	#4	5	6'-6"	122
V1	52	#4	STR	6'-2"	214

REINFORCING STEEL (FOR ONE END BENT) 2636 LBS.

CLASS A CONCRETE BREAKDOWN (FOR ONE END BENT)

POUR #1 CAP, LOWER PART OF WINGS & COLLARS 19.5 C.Y.

POUR #2 UPPER PART OF WINGS 2.3 C.Y.

TOTAL CLASS A CONCRETE 21.6 C.Y.

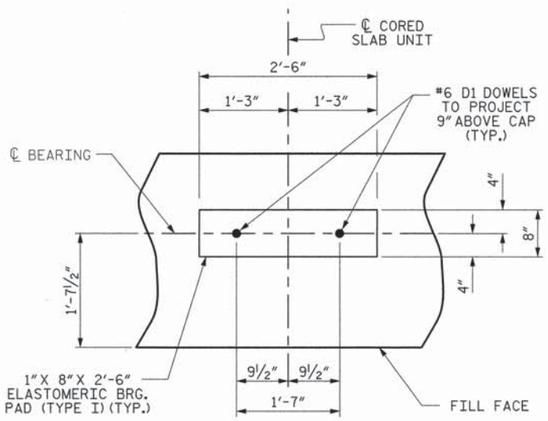

DETAIL "A"

(END BENT No. 1 SHOWN, END BENT No. 2 SIMILAR BY ROTATION)

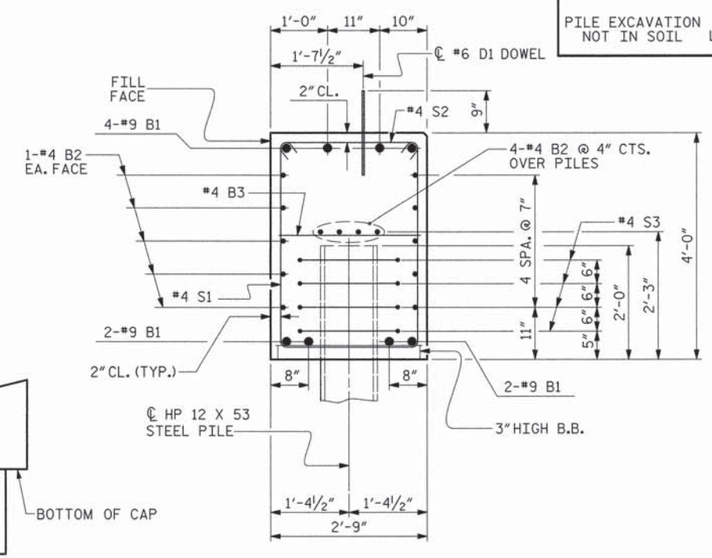

SECTION A-A

(CONCRETE COLLAR NOT SHOWN FOR CLARITY. SEE "CORROSION PROTECTION FOR STEEL PILES DETAIL.")

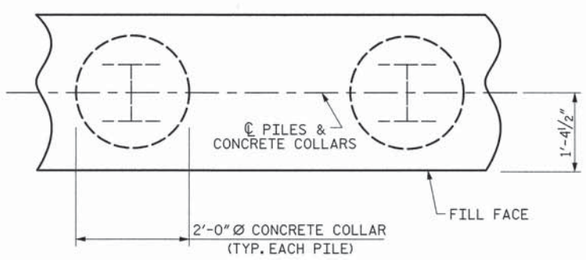

PLAN

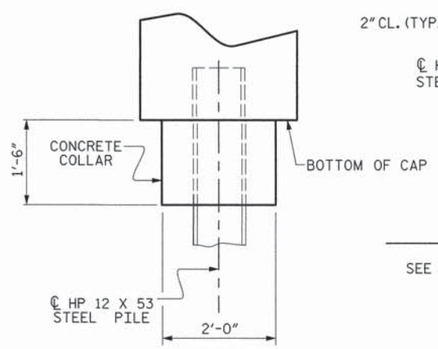

ELEVATION

CORROSION PROTECTION FOR STEEL PILES DETAIL

(END BENT No. 1 SHOWN, END BENT No. 2 SIMILAR BY ROTATION)

PROJECT NO. 17BP.4.R.42

NASH COUNTY

STATION: 13+75.00 -L-

SHEET 4 OF 4

STATE OF NORTH CAROLINA
DEPARTMENT OF TRANSPORTATION
RALEIGH

SUBSTRUCTURE

END BENT No. 1 & 2 DETAILS

THIS STANDARD DRAWING REVIEWED & ADOPTED FOR USE AT THE REFERENCED LOCATION BY THE UNDERSIGNED:

NORTH CAROLINA PROFESSIONAL SEAL 19661 ENGINEER KEVIN AUSTIN 6/12/13

PLANS PREPARED BY:
MULKEY ENGINEERS & CONSULTANTS
PO Box 33127 RALEIGH, N.C. 27636
(919) 851-1912
(919) 851-1918 (FAX)
WWW.MULKEYINC.COM
NC LICENSE NO. C-1321

ASSEMBLED BY : Z. H. BROWN	DATE : 11/20/12
CHECKED BY : W. A. DAVIS	DATE : 5/14/13
DRAWN BY : WJH 12/11	
CHECKED BY : AAC 12/11	

REVISIONS								SHEET NO.
NO.	BY:	DATE:	NO.	BY:	DATE:			25
1			3					TOTAL SHEETS
2			4					35

STD. NO. EB_33_90S4

6/12/2013 2:45:42 PM G:\Project\2009\200923.52\CLENT\Structures\Nash 194.50.EB2.03.dgn

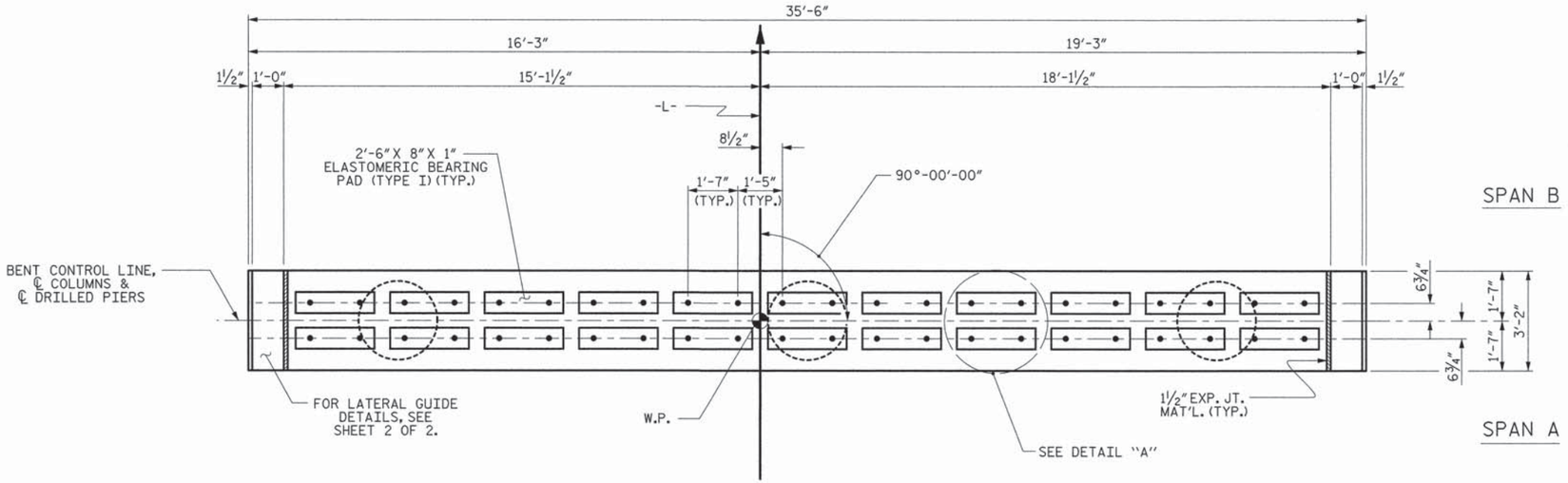

PLAN

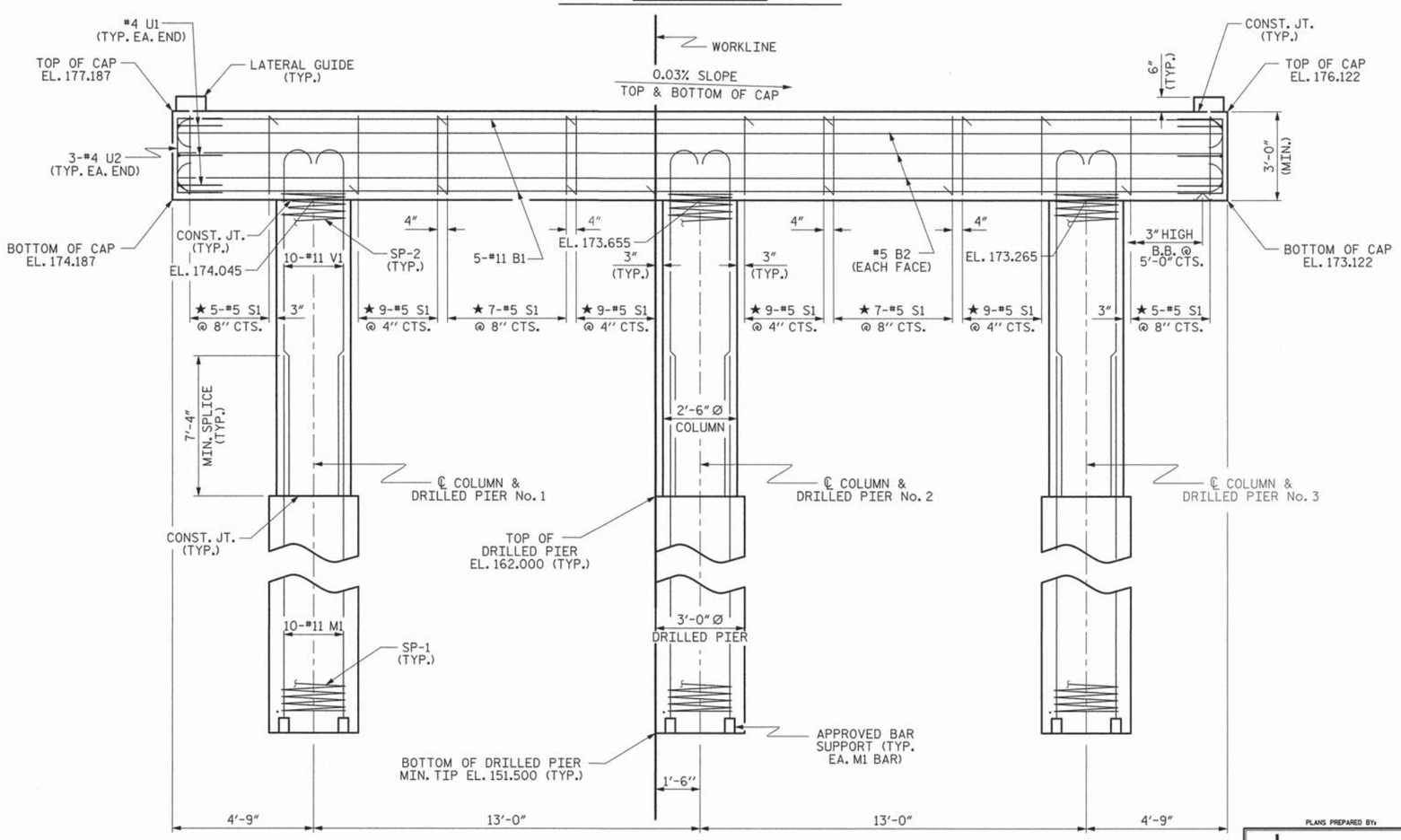

ELEVATION

DIMENSIONS & REINFORCING STEEL ARE TYPICAL FOR EACH COLUMN & DRILLED PIER UNLESS OTHERWISE NOTED.

NOTES

STIRRUPS IN CAP MAY BE SHIFTED AS NECESSARY TO CLEAR DOWELS.

HOOKS ON "V" BARS MAY BE TURNED AS NECESSARY FOR PLACING REINFORCING STEEL.

FOR DRILLED PIERS, SEE SECTION 411 OF THE STANDARD SPECIFICATIONS.

ALL STEEL IN THE DRILLED PIERS IS INCLUDED IN THE PAY ITEMS FOR "REINFORCING STEEL" AND "SPIRAL COLUMN REINFORCING STEEL."

THE LATERAL GUIDES ARE NOT TO BE POURED UNTIL AFTER THE CORED SLAB UNITS ARE IN PLACE.

★ INVERT ALTERNATE STIRRUPS.

THE LOCATION OF THE CONSTRUCTION JOINT IN THE DRILLED PIERS IS BASED ON AN APPROXIMATE GROUND LINE ELEVATION. IF THE CONSTRUCTION JOINT IS ABOVE THE ACTUAL GROUND LINE ELEVATION, THE CONTRACTOR SHALL PLACE THE CONSTRUCTION JOINT ONE FOOT BELOW THE GROUND LINE.

DRILLED PIERS SHALL BE TERMINATED ONE FOOT ± ABOVE NORMAL WATER SURFACE ELEVATION FOR SHAFTS LOCATED IN WATER.

THE CONTRACTOR'S ATTENTION IS CALLED TO THE FACT THAT THE LONGITUDINAL REINFORCEMENT FOR DRILLED PIERS IS DETAILED WITH 3 FEET OF EXTRA LENGTH.

THE CONTRACTOR HAS THE OPTION TO OMIT THE LATERAL GUIDE IF APPROVED BY THE ENGINEER.

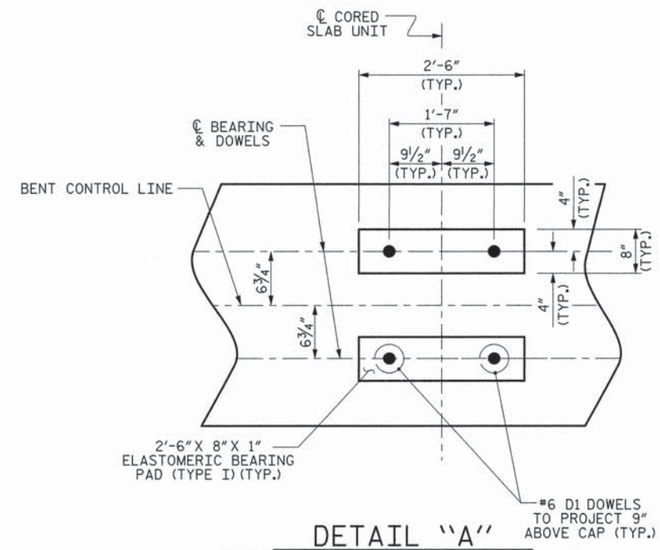

DETAIL "A"

(DIMENSIONS ARE TYPICAL EACH BEARING)

PROJECT NO. 17BP.4.R.42

NASH COUNTY

STATION: 13+75.00 -L-

SHEET 1 OF 2

STATE OF NORTH CAROLINA
DEPARTMENT OF TRANSPORTATION
RALEIGH

SUBSTRUCTURE

BENT No. 1

REVISIONS								SHEET NO.
NO.	BY:	DATE:	NO.	BY:	DATE:			26
1			3					TOTAL SHEETS
2			4					35

THIS STANDARD DRAWING REVIEWED & ADOPTED FOR USE AT THE REFERENCED LOCATION BY THE UNDERSIGNED:

NORTH CAROLINA PROFESSIONAL ENGINEER SEAL 19661 L. KEVIN AUSTIN 6/13/13

PLANS PREPARED BY:
MULKEY ENGINEERS & CONSULTANTS
PO Box 33127
Raleigh, N.C. 27636
(919) 851-1912
(919) 851-1918 (FAX)
WWW.MULKEYINC.COM
NC LICENSE NO. C-1021

ASSEMBLED BY :	Z. H. BROWN	DATE :	5/6/13
CHECKED BY :	W. A. DAVIS	DATE :	5/14/13
DRAWN BY :	DGE	03/10	
CHECKED BY :	MKT	03/10	

STD. NO. DP_BT_33_90S_<50'

6/13/13 G:\Project\2009\2009253.5\CLIENT\Structures\Nash (84.50.B1.0).dgn 6/12/2013

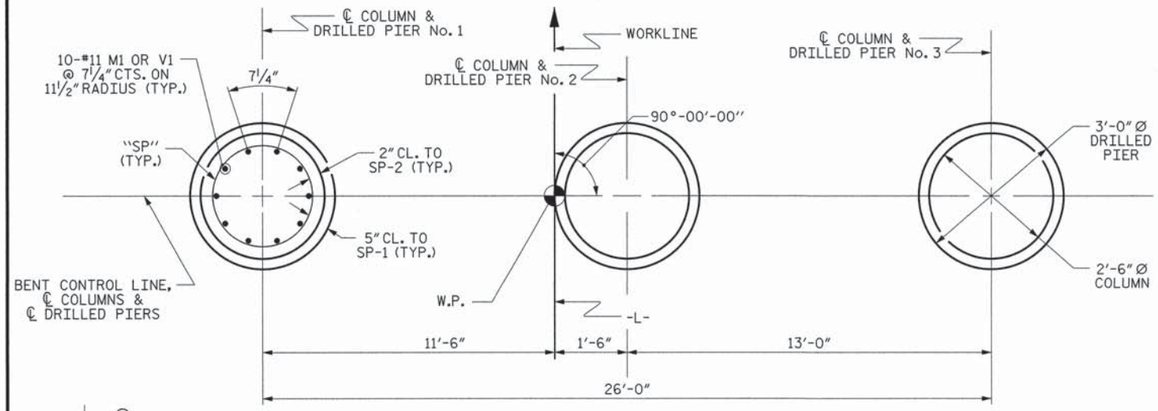

PLAN OF DRILLED PIERS & COLUMNS

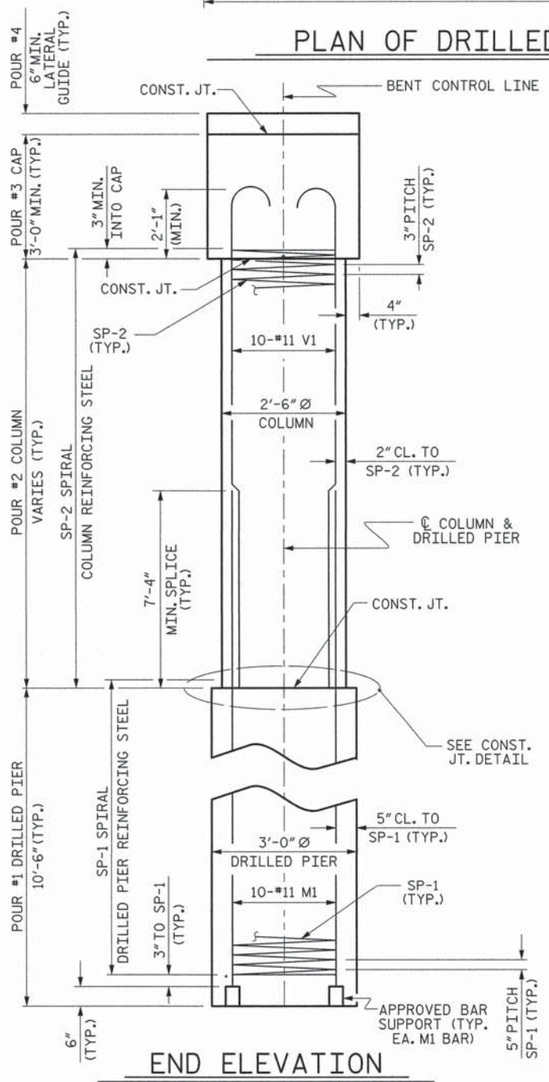

END ELEVATION

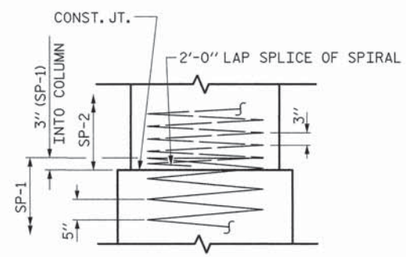

CONSTRUCTION JOINT DETAIL

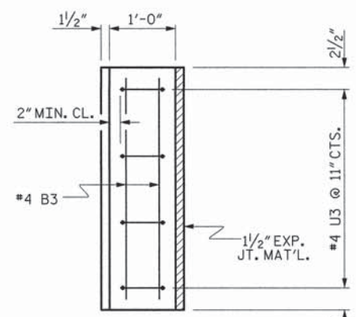

PLAN

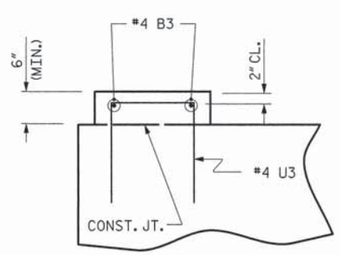

ELEVATION

LATERAL GUIDE DETAILS

(LEFT LATERAL GUIDE SHOWN, RIGHT SIDE SIMILAR)

BAR TYPES

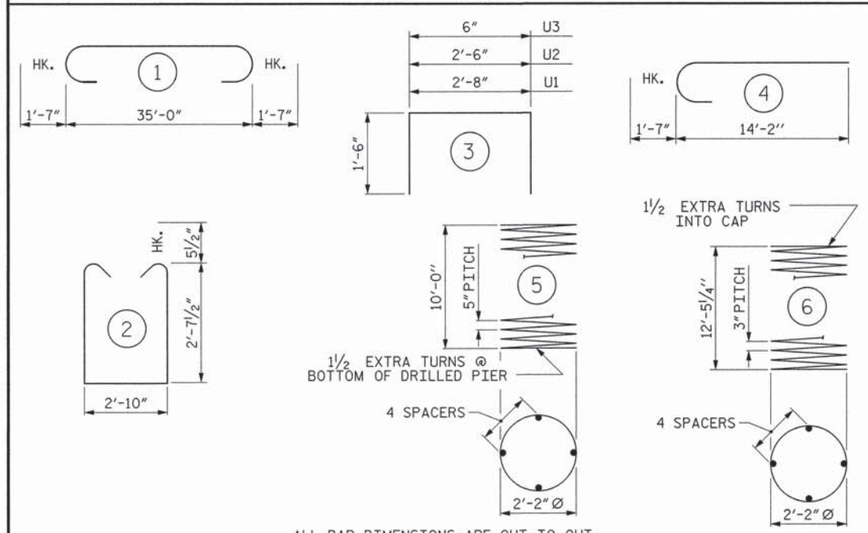

ALL BAR DIMENSIONS ARE OUT TO OUT

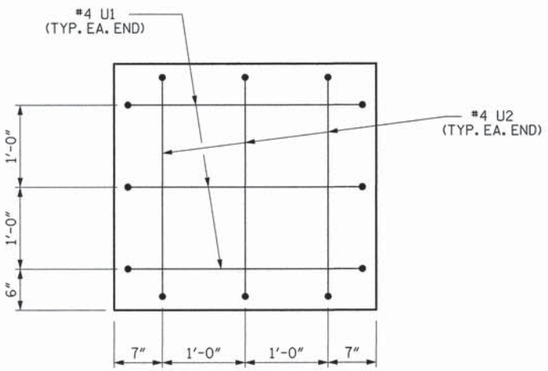

END OF CAP VIEW

(TYPICAL BOTH ENDS)

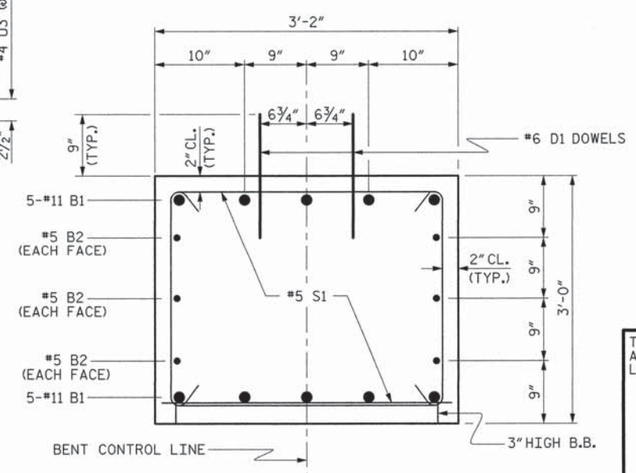

SECTION THRU CAP

BILL OF MATERIAL
FOR ONE BENT

BAR	NO.	SIZE	TYPE	LENGTH	WEIGHT
B1	10	#11	1	38'-2"	2028
B2	6	#5	STR	35'-2"	220
B3	4	#4	STR	2'-10"	8
D1	44	#6	STR	1'-6"	99
M1	30	#11	STR	20'-7"	3281
S1	60	#5	2	9'-0"	563
U1	6	#4	3	5'-8"	23
U2	6	#4	3	5'-6"	22
U3	8	#4	3	3'-6"	19
V1	30	#11	4	15'-9"	2510

REINFORCING STEEL (FOR ONE BENT) 8773 LBS.

SP-1	3	*	5	222'-1"	232
SP-2	3	**	6	435'-3"	291

SPIRAL COLUMN REINFORCING STEEL (FOR ONE BENT) 523 LBS.

* THE SP-1 SPIRAL REINFORCING STEEL SHALL BE W31 OR D-31 COLD DRAWN WIRE OR #5 PLAIN OR DEFORMED BAR

** THE SP-2 SPIRAL REINFORCING STEEL SHALL BE W20 OR D-20 COLD DRAWN WIRE OR #4 PLAIN OR DEFORMED BAR

CLASS A CONCRETE BREAKDOWN (FOR ONE BENT)

POUR #2 (COLUMNS)	3.2 C.Y.
POUR #3 (CAP)	12.5 C.Y.
POUR #4 (LATERAL GUIDE)	0.1 C.Y.
TOTAL CLASS A CONCRETE	15.8 C.Y.

DRILLED PIERS: (FOR ONE BENT)

DRILLED PIER CONCRETE POUR #1 (DRILLED PIERS)	3.7 C.Y.
3'-0" Ø DRILLED PIER NOT IN SOIL	25 LIN. FT.
3'-0" Ø DRILLED PIER IN SOIL	6.5 LIN. FT.
PERMANENT STEEL CASING FOR 3'-0" Ø DRILLED PIER	10.2 LIN. FT.
CSL TUBES	12 LIN. FT.

PROJECT NO. 17BP.4.R.42

NASH COUNTY

STATION: 13+75.00 -L-

SHEET 2 OF 2

PLANS PREPARED BY:
MULKEY ENGINEERS & CONSULTANTS
PO Box 33127 Raleigh, N.C. 27636
(919) 851-1912
(919) 851-1918 (FAX)
WWW.MULKEYINC.COM
NC LICENSE NO. C-1021

THIS STANDARD DRAWING REVIEWED & ADOPTED FOR USE AT THE REFERENCED LOCATION BY THE UNDERSIGNED:

NORTH CAROLINA PROFESSIONAL ENGINEER SEAL 19661 KEVIN AUSTIN 6/13/13

STATE OF NORTH CAROLINA
DEPARTMENT OF TRANSPORTATION
RALEIGH

SUBSTRUCTURE

BENT No. 1

REVISIONS							SHEET NO.
NO.	BY:	DATE:	NO.	BY:	DATE:		27
1			3				TOTAL SHEETS
2			4				35

ASSEMBLED BY : Z. H. BROWN DATE : 5/6/13
CHECKED BY : W. A. DAVIS DATE : 5/14/13
DRAWN BY : DGE 03/10
CHECKED BY : MKT 03/10

6/12/2013 4:45:56 PM G:\Project\2009\2009123.52\CLIENT\Structures\Nash (94.50) BL02.dgn

STD. NO. DP_BT_33_90S_<50'

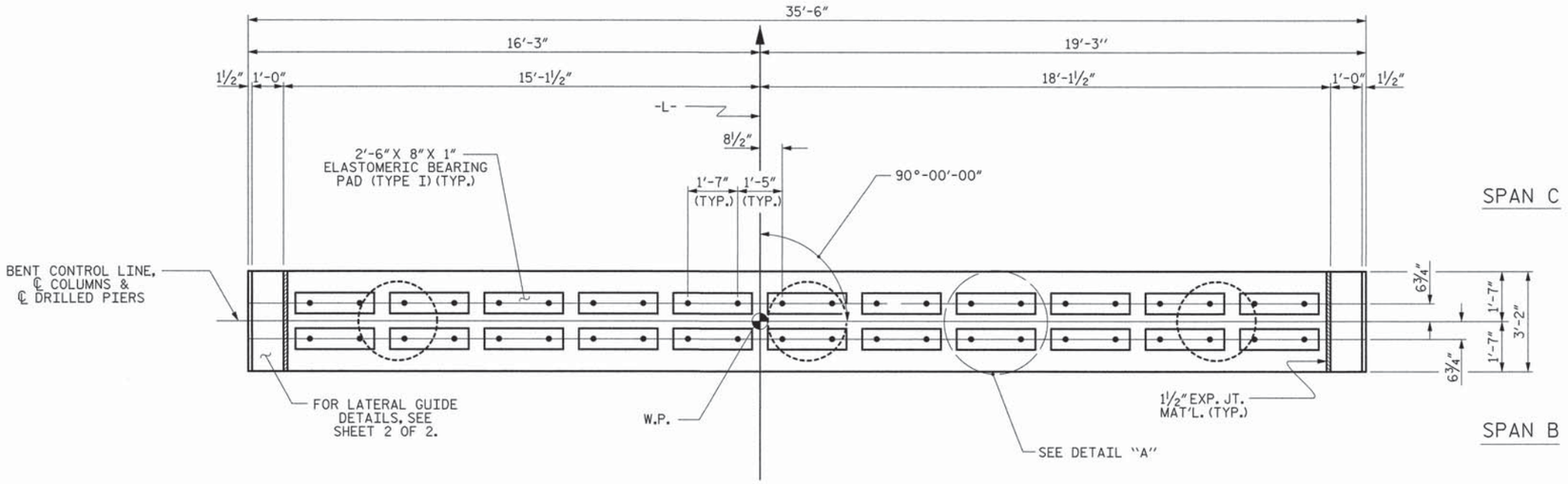

PLAN

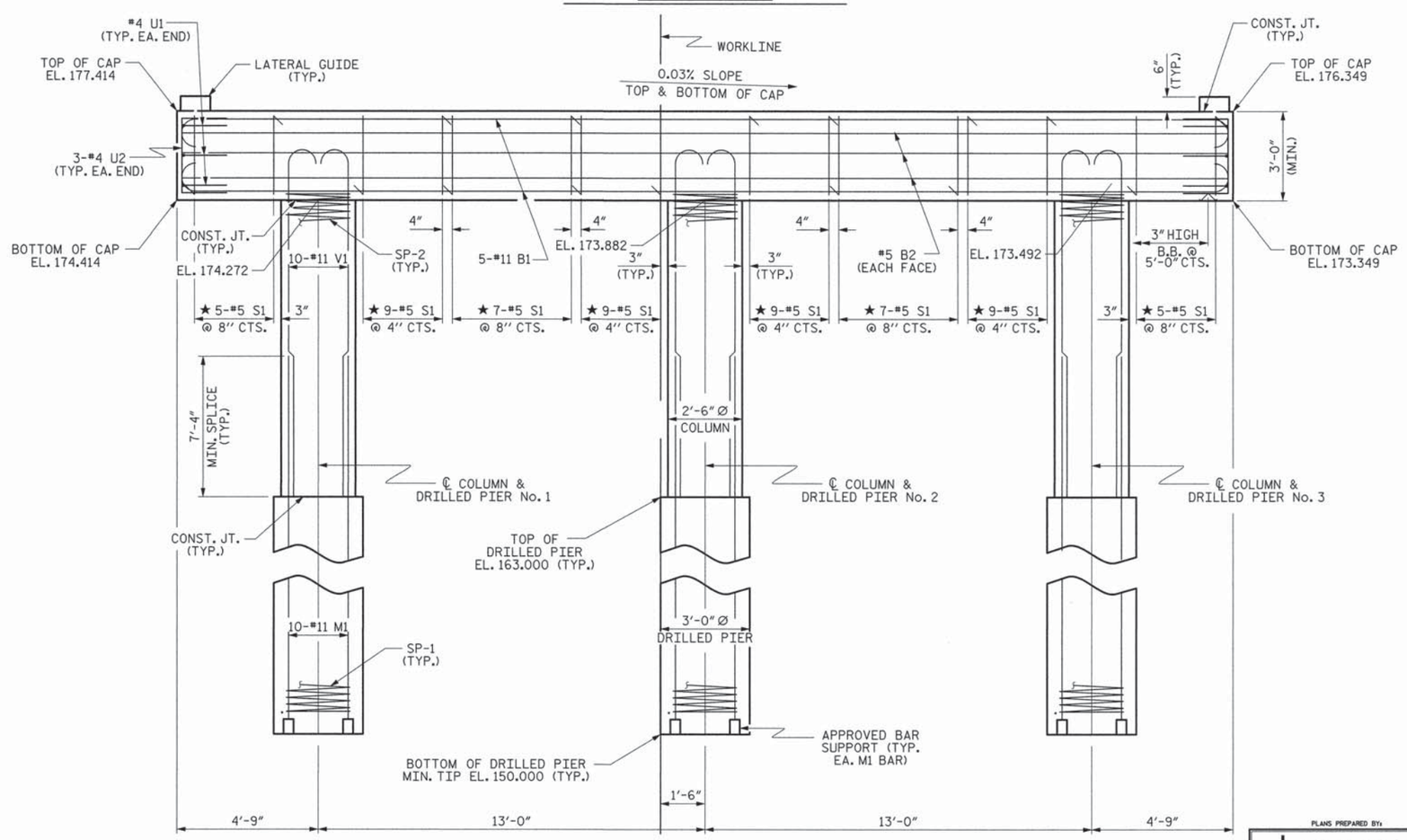

ELEVATION

DIMENSIONS & REINFORCING STEEL ARE TYPICAL FOR EACH COLUMN & DRILLED PIER UNLESS OTHERWISE NOTED.

NOTES

STIRRUPS IN CAP MAY BE SHIFTED AS NECESSARY TO CLEAR DOWELS.

HOOKS ON "V" BARS MAY BE TURNED AS NECESSARY FOR PLACING REINFORCING STEEL.

FOR DRILLED PIERS, SEE SECTION 411 OF THE STANDARD SPECIFICATIONS.

ALL STEEL IN THE DRILLED PIERS IS INCLUDED IN THE PAY ITEMS FOR "REINFORCING STEEL" AND "SPIRAL COLUMN REINFORCING STEEL."

THE LATERAL GUIDES ARE NOT TO BE POURED UNTIL AFTER THE CORED SLAB UNITS ARE IN PLACE.

★ INVERT ALTERNATE STIRRUPS.

THE LOCATION OF THE CONSTRUCTION JOINT IN THE DRILLED PIERS IS BASED ON AN APPROXIMATE GROUND LINE ELEVATION. IF THE CONSTRUCTION JOINT IS ABOVE THE ACTUAL GROUND LINE ELEVATION, THE CONTRACTOR SHALL PLACE THE CONSTRUCTION JOINT ONE FOOT BELOW THE GROUND LINE.

DRILLED PIERS SHALL BE TERMINATED ONE FOOT ± ABOVE NORMAL WATER SURFACE ELEVATION FOR SHAFTS LOCATED IN WATER.

THE CONTRACTOR'S ATTENTION IS CALLED TO THE FACT THAT THE LONGITUDINAL REINFORCEMENT FOR DRILLED PIERS IS DETAILED WITH 3 FEET OF EXTRA LENGTH.

THE CONTRACTOR HAS THE OPTION TO OMIT THE LATERAL GUIDE IF APPROVED BY THE ENGINEER.

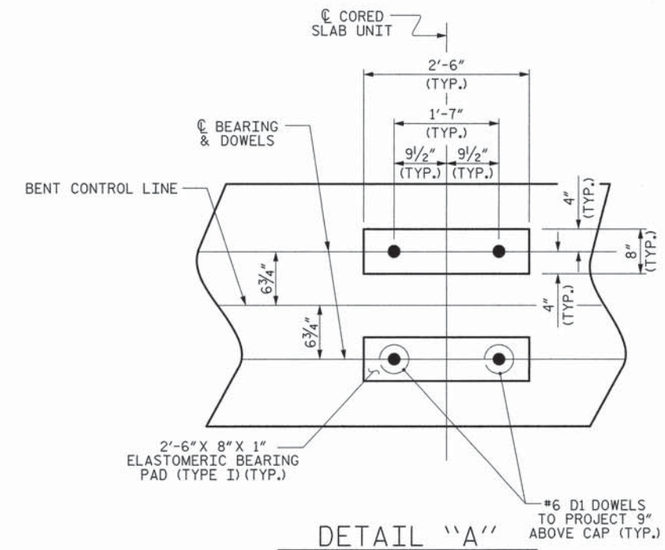

DETAIL "A"

(DIMENSIONS ARE TYPICAL EACH BEARING)

PROJECT NO. 17BP.4.R.42

NASH COUNTY

STATION: 13+75.00 -L-

SHEET 1 OF 2

STATE OF NORTH CAROLINA
DEPARTMENT OF TRANSPORTATION
RALEIGH

SUBSTRUCTURE

BENT No. 2

THIS STANDARD DRAWING REVIEWED & ADOPTED FOR USE AT THE REFERENCED LOCATION BY THE UNDERSIGNED:

NORTH CAROLINA PROFESSIONAL ENGINEER SEAL 19661 L. KEVIN AUSTIN 6/13/13

PLANS PREPARED BY:
MULKEY ENGINEERS & CONSULTANTS
PO Box 33127
Raleigh, N.C. 27636
(919) 851-1912
(919) 851-1918 (FAX)
WWW.MULKEYINC.COM
NC LICENSE NO. C-1321

REVISIONS							SHEET NO.
NO.	BY:	DATE:	NO.	BY:	DATE:		28
1			3				TOTAL SHEETS
2			4				35

ASSEMBLED BY : Z. H. BROWN DATE : 5/6/13
CHECKED BY : W. A. DAVIS DATE : 5/14/13
DRAWN BY : DGE 03/10
CHECKED BY : MKT 03/10

STD. NO. DP_BT_33_90S_<50'

6/13/2013
11:10:35 AM
G:\Project\2009\2009923.527\CLIENT\Structures\Nash I94 SD.B2.04.dgn

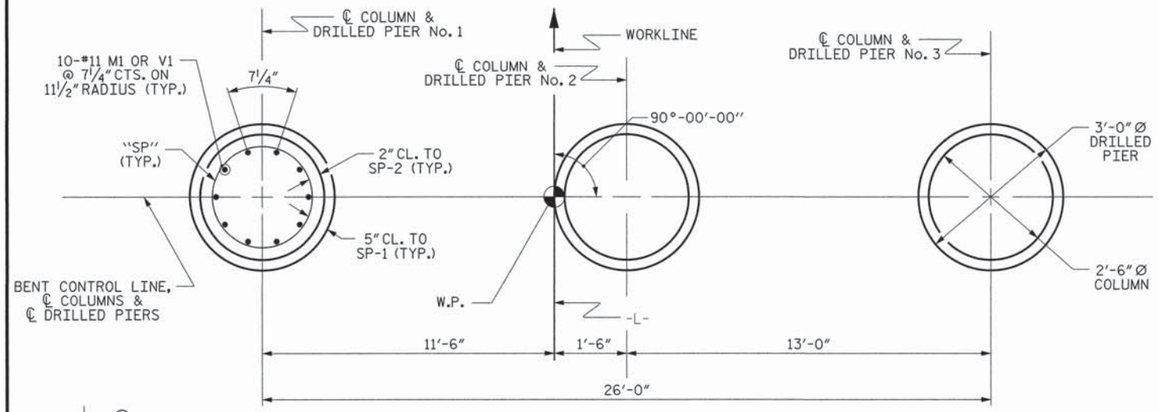

PLAN OF DRILLED PIERS & COLUMNS

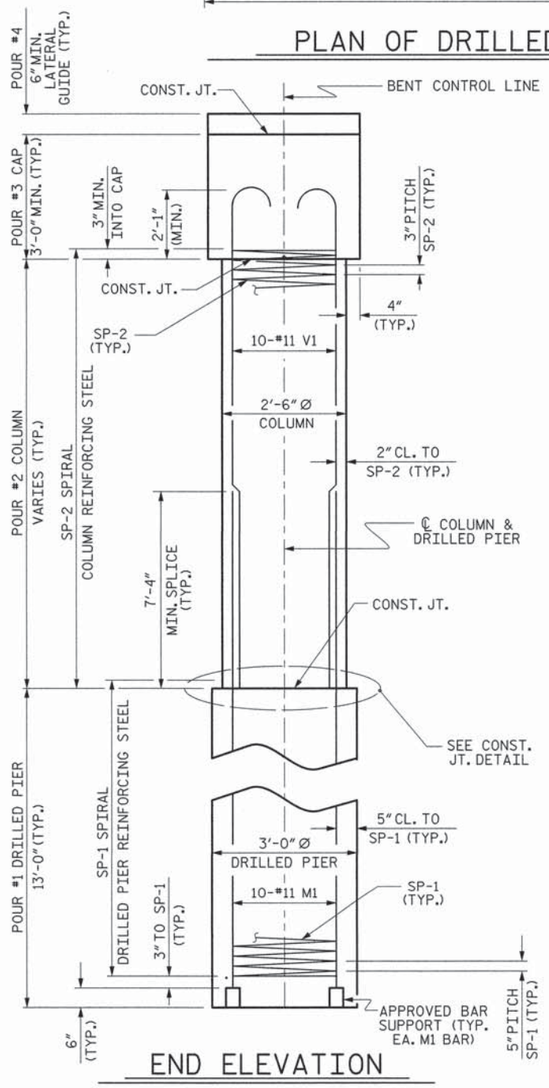

END ELEVATION

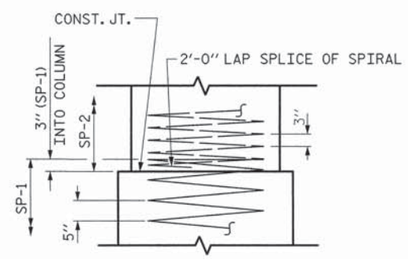

CONSTRUCTION JOINT DETAIL

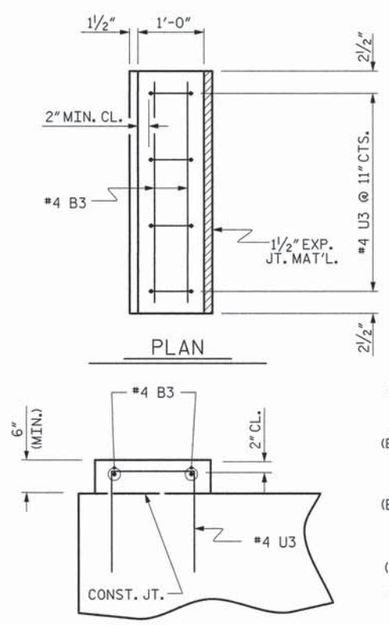

LATERAL GUIDE DETAILS

(LEFT LATERAL GUIDE SHOWN, RIGHT SIDE SIMILAR)

BAR TYPES

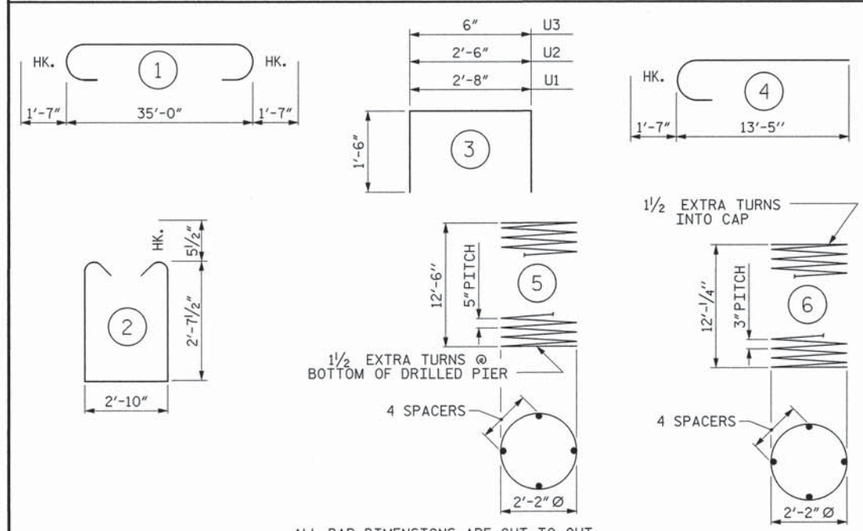

ALL BAR DIMENSIONS ARE OUT TO OUT

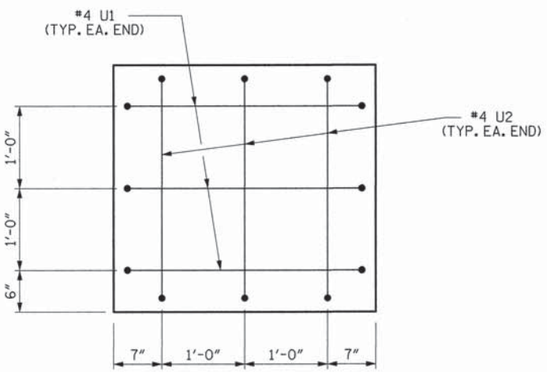

END OF CAP VIEW

(TYPICAL BOTH ENDS)

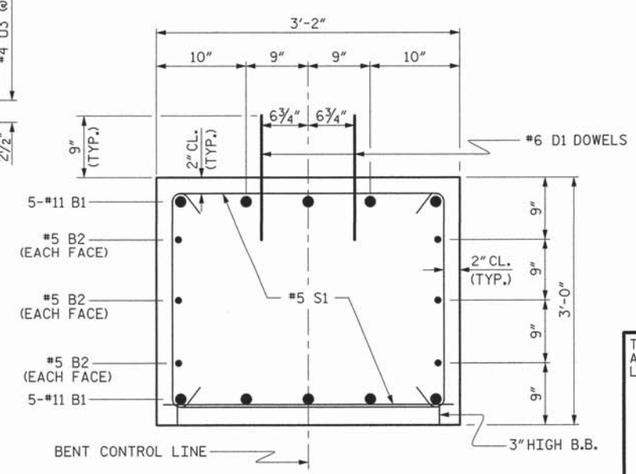

SECTION THRU CAP

BILL OF MATERIAL

FOR ONE BENT

BAR	NO.	SIZE	TYPE	LENGTH	WEIGHT
B1	10	#11	1	38'-2"	2028
B2	6	#5	STR	35'-2"	220
B3	4	#4	STR	2'-10"	8
D1	44	#6	STR	1'-6"	99
M1	30	#11	STR	23'-1"	3679
S1	60	#5	2	9'-0"	563
U1	6	#4	3	5'-8"	23
U2	6	#4	3	5'-6"	22
U3	8	#4	3	3'-6"	19
V1	30	#11	4	15'-0"	2391

REINFORCING STEEL (FOR ONE BENT) 9052 LBS.

SP-1	3	*	5	271'-5"	283
SP-2	3	**	6	422'-11"	283

SPIRAL COLUMN REINFORCING STEEL (FOR ONE BENT) 566 LBS.

* THE SP-1 SPIRAL REINFORCING STEEL SHALL BE W31 OR D-31 COLD DRAWN WIRE OR #5 PLAIN OR DEFORMED BAR

** THE SP-2 SPIRAL REINFORCING STEEL SHALL BE W20 OR D-20 COLD DRAWN WIRE OR #4 PLAIN OR DEFORMED BAR

CLASS A CONCRETE BREAKDOWN (FOR ONE BENT)

POUR #2 (COLUMNS)	3.1 C.Y.
POUR #3 (CAP)	12.5 C.Y.
POUR #4 (LATERAL GUIDE)	0.1 C.Y.
TOTAL CLASS A CONCRETE	15.7 C.Y.

DRILLED PIERS: (FOR ONE BENT)

DRILLED PIER CONCRETE POUR #1 (DRILLED PIERS)	4.6 C.Y.
3'-0" Ø DRILLED PIER NOT IN SOIL	25 LIN. FT.
3'-0" Ø DRILLED PIER IN SOIL	11 LIN. FT.
PERMANENT STEEL CASING FOR 3'-0" Ø DRILLED PIER	15.6 LIN. FT.
CSL TUBES	14.5 LIN. FT.

PROJECT NO. 17BP.4.R.42

NASH COUNTY

STATION: 13+75.00 -L-

SHEET 2 OF 2

PLANS PREPARED BY:

MULKEY ENGINEERS & CONSULTANTS
PO Box 33127 RALEIGH, N.C. 27636
(919) 851-1912
(919) 851-1918 (FAX)
WWW.MULKEYINC.COM
NC LICENSE NO. C-1021

THIS STANDARD DRAWING REVIEWED & ADOPTED FOR USE AT THE REFERENCED LOCATION BY THE UNDERSIGNED:

NORTH CAROLINA PROFESSIONAL SEAL ENGINEER 19661 KEVIN AUSTIN 6/13/13

STATE OF NORTH CAROLINA
DEPARTMENT OF TRANSPORTATION
RALEIGH

SUBSTRUCTURE

BENT No. 2

REVISIONS								SHEET NO.
NO.	BY:	DATE:	NO.	BY:	DATE:			29
1			3					TOTAL SHEETS
2			4					35

ASSEMBLED BY :	Z. H. BROWN	DATE :	5/6/13
CHECKED BY :	W. A. DAVIS	DATE :	5/14/13
DRAWN BY :	DGE	03/10	
CHECKED BY :	MKT	03/10	

6/12/2013 5:06:53 PM G:\Project\2009\200923.52\CLE\1\Structures\Nash (94.50.82.02).dgn

STD. NO. DP_BT_33_90S_<50'

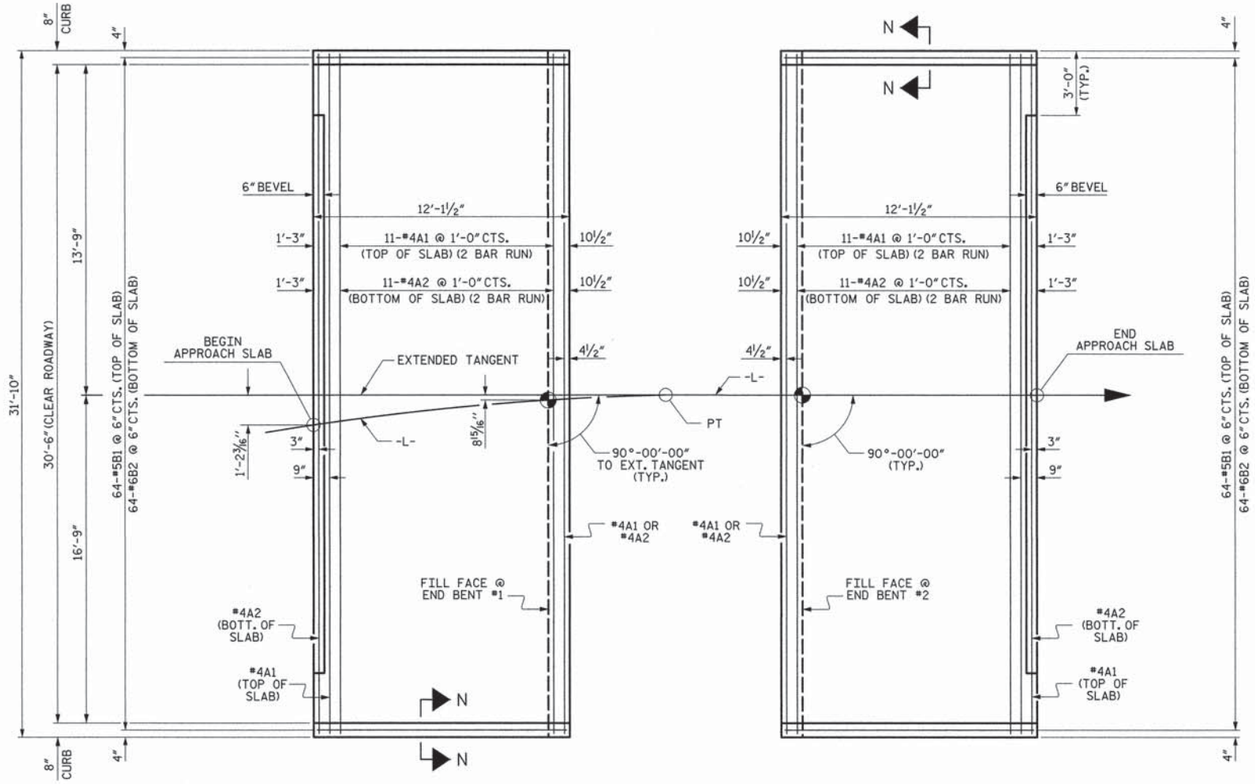

PLAN @ END BENT #1

PLAN @ END BENT #2

DIMENSIONS SHOWN ARE TYPICAL FOR BOTH APPROACH SLABS

NOTES

FOR BRIDGE APPROACH FILL INCLUDING GEOTEXTILE, 4"Ø DRAINAGE PIPE, AND #78M STONE BACKFILL, SEE ROADWAY PLANS.

GEOTEXTILE SHALL BE TYPE 1IN ACCORDANCE WITH THE STANDARD SPECIFICATIONS SECTION 1056.

#78M STONE BACKFILL (CLASS V SELECT MATERIAL) SHALL BE IN ACCORDANCE WITH STANDARD SPECIFICATIONS SECTION 1016.

#78M STONE BACKFILL IS TO BE CONTINUOUS ALONG FILL FACE OF BACKWALL FROM OUTSIDE EDGE TO OUTSIDE EDGE OF APPROACH SLAB.

FOR THE 4"Ø DRAINAGE PIPE OUTLET(S), SEE ROADWAY STANDARD DRAWINGS.

AREA BETWEEN THE WINGWALL AND APPROACH SLAB SHALL BE GRADED TO DRAIN THE WATER AWAY FROM THE FILL FACE OF THE BRIDGE AND SHALL BE PAVED. SEE ROADWAY PLANS.

APPROACH SLAB GROOVING IS NOT REQUIRED.

BILL OF MATERIAL

APPROACH SLAB AT EB #1

BAR	NO.	SIZE	TYPE	LENGTH	WEIGHT
✳ A1	26	#4	STR	16'-11"	294
A2	26	#4	STR	16'-9"	291
✳ B1	64	#5	STR	11'-2"	745
B2	64	#6	STR	11'-8"	1121
REINFORCING STEEL				LBS.	1412
✳ EPOXY COATED REINFORCING STEEL				LBS.	1039
CLASS AA CONCRETE				C. Y.	19.9

APPROACH SLAB AT EB #2

BAR	NO.	SIZE	TYPE	LENGTH	WEIGHT
✳ A1	26	#4	STR	16'-11"	294
A2	26	#4	STR	16'-9"	291
✳ B1	64	#5	STR	11'-2"	745
B2	64	#6	STR	11'-8"	1121
REINFORCING STEEL				LBS.	1412
✳ EPOXY COATED REINFORCING STEEL				LBS.	1039
CLASS AA CONCRETE				C. Y.	19.7

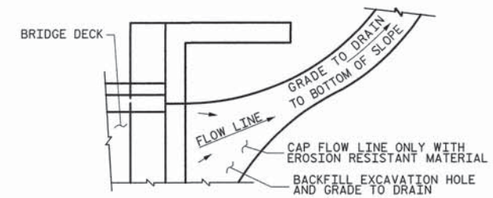

NOTE: IF THE APPROACH SLAB IS NOT CONSTRUCTED IMMEDIATELY AFTER THE BACKFILLING OF THE END BENT EXCAVATION, GRADE TO DRAIN TO THE BOTTOM OF THE SLOPE AND PROVIDE EROSION RESISTANT MATERIAL, SUCH AS FIBERGLASS ROVING OR AS DIRECTED BY THE ENGINEER TO PREVENT SOIL EROSION AND TO PROTECT THE AREA ADJACENT TO THE STRUCTURE. THE CONTRACTOR WILL BE REQUIRED TO REMOVE THESE MATERIALS PRIOR TO CONSTRUCTION OF THE APPROACH SLAB.

TEMPORARY DRAINAGE DETAIL

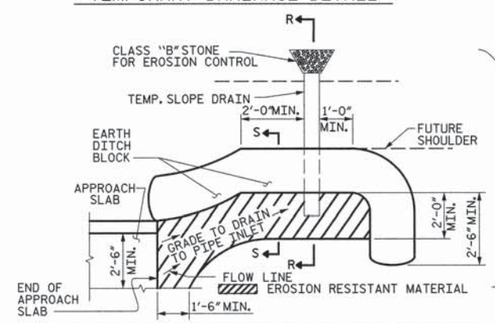

NOTE: IMMEDIATELY AFTER THE CONSTRUCTION OF THE APPROACH SLAB, THE CONTRACTOR SHALL PROVIDE TEMPORARY BERM AND SLOPE DRAIN. CONTRACTOR SHALL GRADE TO PIPE INLET AND PROVIDE EROSION RESISTANT MATERIAL AS SHOWN. THE EROSION RESISTANT MATERIAL SHALL BE EITHER 1) ASPHALT PLANT MIX, TYPE 1 OR TYPE 2, MIN. 2" DEPTH, 2) EROSION CONTROL MAT, OR 3) CONCRETE, AS DIRECTED BY THE ENGINEER. THE SLOPE DRAIN SHALL CONSIST OF A NON-PERFORATED TEMPORARY DRAINAGE PIPE, 12 INCHES IN DIAMETER.

PLAN VIEW

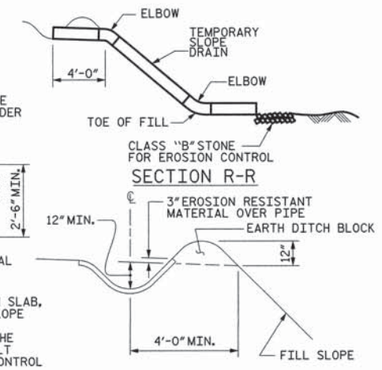

SECTION S-S

TEMPORARY BERM AND SLOPE DRAIN DETAILS

(TO BE USED WHEN SHOULDER BERM GUTTER IS REQUIRED)

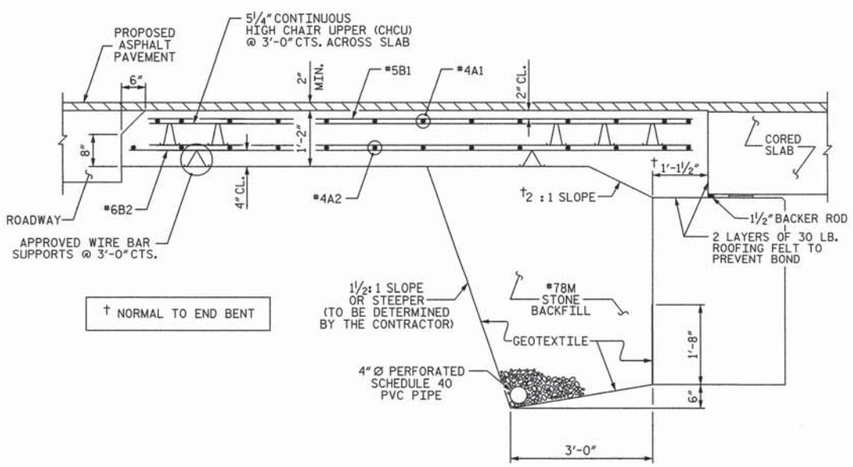

† NORMAL TO END BENT

SECTION THRU SLAB

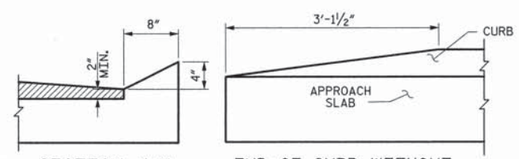

SECTION N-N

END OF CURB WITHOUT SHOULDER BERM GUTTER

CURB DETAILS

SPLICE LENGTHS		
BAR SIZE	EPOXY COATED	UNCOATED
#4	2'-0"	1'-9"
#5	2'-6"	2'-2"
#6	3'-10"	2'-7"

PROJECT NO. 17BP.4.R.42

NASH COUNTY

STATION: 13+75.00 -L-

PLANS PREPARED BY:

MULKEY ENGINEERS & CONSULTANTS
PO Box 33127
Raleigh, N.C. 27636
(919) 851-1912
(919) 851-1918 (FAX)
NC LICENSE NO. C-1021
WWW.MULKEYINC.COM

THIS STANDARD DRAWING REVIEWED & ADOPTED FOR USE AT THE REFERENCED LOCATION BY THE UNDERSIGNED:

NORTH CAROLINA PROFESSIONAL ENGINEER SEAL 19661 L. KEVIN AUSTIN

6/13/13

STATE OF NORTH CAROLINA
DEPARTMENT OF TRANSPORTATION
RALEIGH

STANDARD
BRIDGE APPROACH SLAB
FOR PRESTRESSED CONCRETE
CORED SLAB UNIT
(SUB-REGIONAL TIER)
90° SKEW

REVISIONS								SHEET NO.
NO.	BY:	DATE:	NO.	BY:	DATE:			30
1			3					TOTAL SHEETS
2			4					35

ASSEMBLED BY : Z. H. BROWN DATE : 11/19/12
CHECKED BY : W. A. DAVIS DATE : 5/14/13
DRAWN BY : SHS/MAA 5-09
CHECKED BY : BCH 5-09
REV. 12-11 MAA/AAC

6/13/2013 9:01:01 AM G:\Project\2009\2009923.57\CLENT\Structures\Nash 194_SD_AS_01.dgn

STD. NO. BAS_30_90S

STANDARD NOTES

DESIGN DATA:

SPECIFICATIONS	A.A.S.H.T.O. (CURRENT)
LIVE LOAD	SEE PLANS
IMPACT ALLOWANCE	SEE A.A.S.H.T.O.
STRESS IN EXTREME FIBER OF	
STRUCTURAL STEEL - AASHTO M270 GRADE 36	20,000 LBS. PER SQ. IN.
- AASHTO M270 GRADE 50W	27,000 LBS. PER SQ. IN.
- AASHTO M270 GRADE 50	27,000 LBS. PER SQ. IN.
REINFORCING STEEL IN TENSION	
GRADE 60	24,000 LBS. PER SQ. IN.
CONCRETE IN COMPRESSION	1,200 LBS. PER SQ. IN.
CONCRETE IN SHEAR	SEE A.A.S.H.T.O.
STRUCTURAL TIMBER - TREATED OR	
UNTREATED - EXTREME FIBER STRESS	1,800 LBS. PER SQ. IN.
COMPRESSION PERPENDICULAR TO GRAIN OF TIMBER	375 LBS. PER SQ. IN.
EQUIVALENT FLUID PRESSURE OF EARTH	30 LBS. PER CU. FT. (MINIMUM)

MATERIAL AND WORKMANSHIP:

EXCEPT AS MAY OTHERWISE BE SPECIFIED ON PLANS OR IN THE SPECIAL PROVISIONS, ALL MATERIAL AND WORKMANSHIP SHALL BE IN ACCORDANCE WITH THE 2012 "STANDARD SPECIFICATIONS FOR ROADS AND STRUCTURES" OF THE N. C. DEPARTMENT OF TRANSPORTATION.

STEEL SHEET PILING FOR PERMANENT OR TEMPORARY APPLICATIONS SHALL BE HOT ROLLED.

CONCRETE:

UNLESS OTHERWISE REQUIRED ON PLANS, CLASS A CONCRETE SHALL BE USED FOR ALL PORTIONS OF ALL STRUCTURES WITH THE EXCEPTION THAT: CLASS AA CONCRETE SHALL BE USED IN BRIDGE SUPERSTRUCTURES, ABUTMENT BACKWALLS, AND APPROACH SLABS; AND CLASS B CONCRETE SHALL BE USED FOR SLOPE PROTECTION AND RIP RAP.

CONCRETE CHAMFERS:

UNLESS OTHERWISE NOTED ON THE PLANS, ALL EXPOSED CORNERS ON STRUCTURES SHALL BE CHAMFERED 3/4" WITH THE FOLLOWING EXCEPTIONS: TOP CORNERS OF CURBS MAY BE ROUNDED TO 1-1/2" RADIUS WHICH IS BUILT INTO CURB FORMS; CORNERS OF TRANSVERSE FLOOR EXPANSION JOINTS SHALL BE ROUNDED WITH A 1/4" FINISHING TOOL UNLESS OTHERWISE REQUIRED ON PLANS; AND CORNERS OF EXPANSION JOINTS IN THE ROADWAY FACES AND TOPS OF CURBS AND SIDEWALKS SHALL BE ROUNDED TO A 1/4" RADIUS WITH A FINISHING STONE OR TOOL UNLESS OTHERWISE REQUIRED ON PLANS.

DOWELS:

DOWELS WHEN INDICATED ON PLANS AS FOR CULVERT EXTENSIONS, SHALL BE EMBEDDED AT LEAST 12" INTO THE OLD CONCRETE AND GROUTED INTO PLACE WITH 1:2 CEMENT MORTAR.

ALLOWANCE FOR DEAD LOAD DEFLECTION, SETTLEMENT, ETC. IN CASTING SUPERSTRUCTURES:

BRIDGES SHALL BE BUILT ON THE GRADE OR VERTICAL CURVE SHOWN ON PLANS. SLABS, CURBS AND PARAPETS SHALL CONFORM TO THE GRADE OR CURVE.

ALL DIMENSIONS WHICH ARE GIVEN IN SECTION AND ARE AFFECTED BY DEAD LOAD DEFLECTIONS ARE DIMENSIONS AT CENTER LINE OF BEARING UNLESS OTHERWISE NOTED ON PLANS. IN SETTING FORMS FOR STEEL BEAM BRIDGES AND PRESTRESSED CONCRETE GIRDER BRIDGES, ADJUSTMENTS SHALL BE MADE DUE TO THE DEAD LOAD DEFLECTIONS FOR THE ELEVATIONS SHOWN. WHERE BLOCKS ARE SHOWN OVER BEAMS FOR BUILDING UP TO THE SLAB, THE VERTICAL DIMENSIONS OF THE BLOCKS SHALL BE ADJUSTED BETWEEN BEARINGS TO COMPENSATE FOR DEAD LOAD DEFLECTIONS, VERTICAL CURVE ORDINATE, AND ACTUAL BEAM CAMBER. WHERE BOTTOM OF SLAB IS IN LINE WITH BOTTOM OF TOP FLANGES, DEPTH OF SLAB BETWEEN BEARINGS SHALL BE ADJUSTED TO COMPENSATE FOR DEAD LOAD DEFLECTION, VERTICAL CURVE ORDINATE, AND ACTUAL BEAM CAMBER.

IN SETTING FALSEWORK AND FORMS FOR REINFORCED CONCRETE SPANS, AN ALLOWANCE SHALL BE MADE FOR DEAD LOAD DEFLECTIONS, SETTLEMENT OF FALSEWORK, AND PERMANENT CAMBER WHICH SHALL BE PROVIDED FOR IN ADDITION TO THE ELEVATIONS SHOWN. AFTER REMOVAL OF THE FALSEWORK, THE FINISHED STRUCTURES SHALL CONFORM TO THE PROFILE AND ELEVATIONS SHOWN ON THE PLANS AND CONSTRUCTION ELEVATIONS FURNISHED BY THE ENGINEER.

DETAILED DRAWINGS FOR FALSEWORK OR FORMS FOR BRIDGE SUPERSTRUCTURE AND ANY STRUCTURE OR PARTS OF A STRUCTURE AS NOTED ON THE PLANS SHALL BE SUBMITTED TO THE ENGINEER FOR APPROVAL BEFORE CONSTRUCTION OF THE FALSEWORK OR FORMS IS STARTED.

REINFORCING STEEL:

ALL REINFORCING STEEL SHALL BE DEFORMED. DIMENSIONS RELATIVE TO PLACEMENT OF REINFORCING ARE TO CENTERS OF BARS UNLESS OTHERWISE INDICATED IN THE PLANS. DIMENSIONS ON BAR DETAILS ARE TO CENTERS OF BARS OR ARE OUT TO OUT AS INDICATED ON PLANS.

WIRE BAR SUPPORTS SHALL BE PROVIDED FOR REINFORCING STEEL WHERE INDICATED ON THE PLANS. WHEN BAR SUPPORT PIECES ARE PLACED IN CONTINUOUS LINES, THEY SHALL BE SO PLACED THAT THE ENDS OF THE SUPPORTING WIRES SHALL BE LAPPED TO LOCK LEGS ON ADJOINING PIECES.

STRUCTURAL STEEL:

AT THE CONTRACTOR'S OPTION, HE MAY SUBSTITUTE 7/8" Ø SHEAR STUDS FOR THE 3/4" Ø STUDS SPECIFIED ON THE PLANS. THIS SUBSTITUTION SHALL BE MADE AT THE RATE OF 3 - 7/8" Ø STUDS FOR 4 - 3/4" Ø STUDS, AND STUD SPACING CHANGES SHALL BE MADE AS NECESSARY TO PROVIDE THE SAME EQUIVALENT NUMBER OF 7/8" Ø STUDS ALONG THE BEAM AS SHOWN FOR 3/4" Ø STUDS BASED ON THE RATIO OF 3 - 7/8" Ø STUDS FOR 4 - 3/4" Ø STUDS. STUDS OF THE LENGTH SPECIFIED ON THE PLANS MUST BE PROVIDED. THE MAXIMUM SPACING SHALL BE 2'-0".

EXCEPT AT THE INTERIOR SUPPORTS OF CONTINUOUS BEAMS WHERE THE COVER PLATE IS IN CONTACT WITH BEARING PLATE, THE CONTRACTOR MAY, AT HIS OPTION, SUBSTITUTE FOR THE COVER PLATES DESIGNATED ON THE PLANS COVER PLATES OF THE EQUIVALENT AREA PROVIDED THESE PLATES ARE AT LEAST 5/16" IN THICKNESS AND DO NOT EXCEED A WIDTH EQUAL TO THE FLANGE WIDTH LESS 2" OR A THICKNESS EQUAL TO 2 TIMES THE FLANGE THICKNESS. THE SIZE OF FILLET WELDS SHALL CONFORM TO THE REQUIREMENTS OF THE CURRENT ANSI/AASHTO/AWS "BRIDGE WELDING CODE". ELECTROSLAG WELDING WILL NOT BE PERMITTED.

WITH THE SOLE EXCEPTION OF EDGES AT SURFACES WHICH BEAR ON OTHER SURFACES, ALL SHARP EDGES AND ENDS OF SHAPES AND PLATES SHALL BE SLIGHTLY ROUNDED BY SUITABLE MEANS TO A RADIUS OF APPROXIMATELY 1/16 INCH OR EQUIVALENT FLAT SURFACE AT A SUITABLE ANGLE PRIOR TO PAINTING, GALVANIZING, OR METALLIZING.

HANDRAILS AND POSTS:

METAL STANDARDS AND FACES OF THE CONCRETE END POSTS FOR THE METAL RAIL SHALL BE SET NORMAL TO THE GRADE OF THE CURB, UNLESS OTHERWISE SHOWN ON PLANS. THE METAL RAIL AND TOPS OF CONCRETE POSTS USED WITH THE ALUMINUM RAIL SHALL BE BUILT PARALLEL TO THE GRADE OF THE CURB.

METAL HANDRAILS SHALL BE IN ACCORDANCE WITH THE PLANS. RAILS SHALL BE AS MANUFACTURED FOR BRIDGE RAILING. CASTINGS SHALL BE OF A UNIFORM APPEARANCE. FINS AND OTHER DEFORMATIONS RESULTING FROM CASTING OR OTHERWISE SHALL BE REMOVED IN A MANNER SO THAT A UNIFORM COLORING OF THE COMPLETED CASTING SHALL BE OBTAINED. CASTINGS WITH DISCOLORATIONS OR OF NON-UNIFORM COLORING WILL NOT BE ACCEPTED. CERTIFIED MILL REPORTS ARE REQUIRED FOR METAL RAILS AND POSTS.

SPECIAL NOTES:

GENERALLY, IN CASE OF DISCREPANCY, THIS STANDARD SHEET OF NOTES SHALL GOVERN OVER THE SPECIFICATIONS, BUT THE REMAINDER OF THE PLANS SHALL GOVERN OVER NOTES HEREON, AND SPECIAL PROVISIONS SHALL GOVERN OVER ALL. SEE SPECIFICATIONS ARTICLE 105-4.

6/4/2013 3:05:44 PM G:\Projects\2009\2009923.52\CLIENT\Structures\Nash 194.SD.SN.01.dgn

REV. 6-16-95 EEM (✓) RGW REV. 5-7-03 RWW (✓) JTE REV. 10-1-11 MAA (✓) GM
REV. 8-16-99 RWW (✓) LES REV. 5-1-06 TLA (✓) GM

EROSION CONTROL PLAN

ENVIRONMENTALLY SENSITIVE AREA
SEE PROJECT SPECIAL PROVISIONS

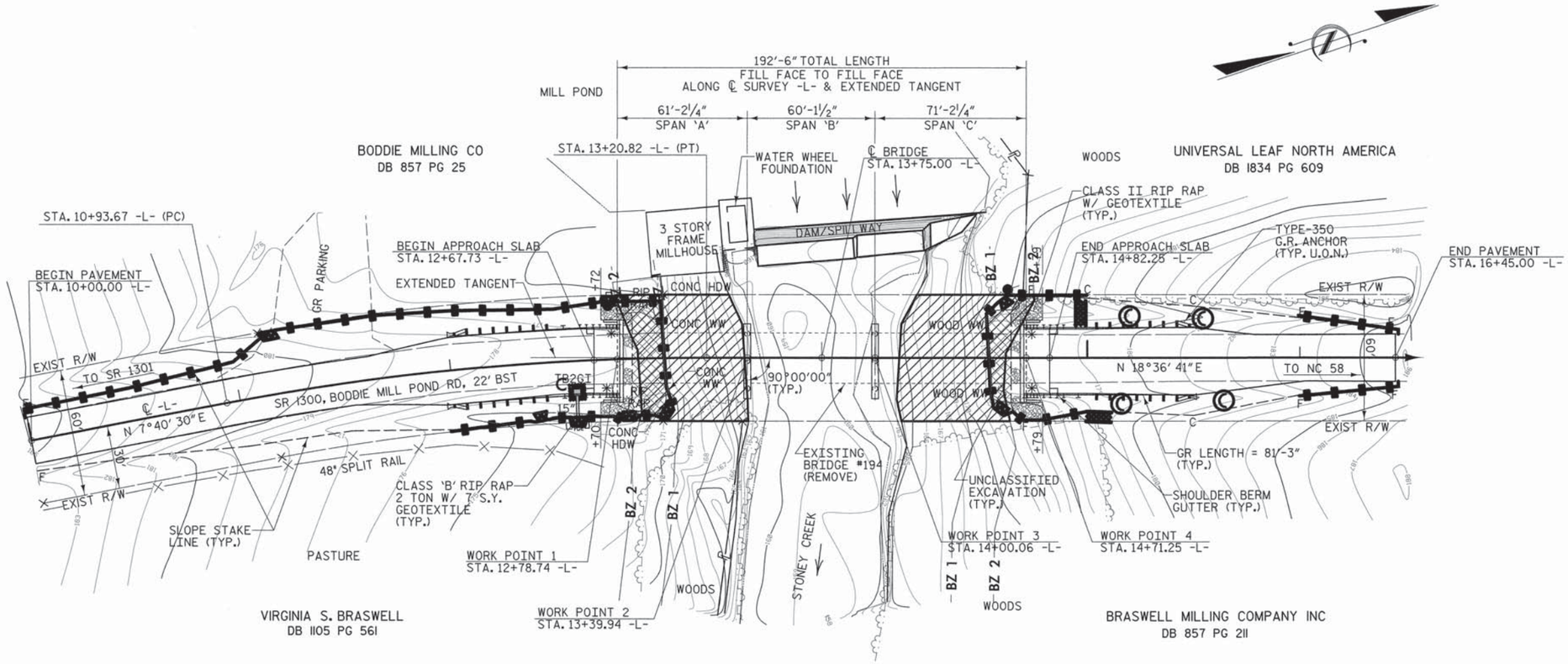

Std. #	Description	Symbol
1605.01	Temporary Silt Fence	
1606.01	Special Sediment Control Fence	
1622.01	Temporary Berms and Slope Drains	
1630.02	Silt Basin Type B	
1630.03	Temporary Silt Ditch	TSD
1630.05	Temporary Diversion	TD
1630.06	Special Stilling Basin	
1632.03	Rock Inlet Sediment Trap Type C	
1633.01	Temporary Rock Silt Check Type-A	
	Temporary Rock Silt Check Type-A with Matting and Polyacrylamide (PAM)	
1633.02	Temporary Rock Silt Check Type-B	
	Coir Fiber Wattle	
	Coir Fiber Wattle with Polyacrylamide (PAM)	
1634.02	Temporary Rock Sediment Dam Type-B	
1635.01	Rock Pipe Inlet Sediment Trap Type-A	

THESE EROSION AND SEDIMENT CONTROL PLANS COMPLY WITH THE REGULATIONS SET FORTH BY THE NCG-010000 GENERAL CONSTRUCTION PERMIT EFFECTIVE AUGUST 3, 2011 ISSUED BY THE NORTH CAROLINA DEPARTMENT OF ENVIRONMENT AND NATURAL RESOURCES DIVISION OF WATER QUALITY.

2012 STANDARD DRAWINGS

1604.01	Railroad Erosion Control Detail	1632.01	Rock Inlet Sediment Trap Type A
1605.01	Temporary Silt Fence	1632.02	Rock Inlet Sediment Trap Type B
1606.01	Special Sediment Control Fence	1632.03	Rock Inlet Sediment Trap Type C
1607.01	Gravel Construction Entrance	1633.01	Temporary Rock Silt Check Type A
1622.01	Temporary Berms and Slope Drains	1633.02	Temporary Rock Silt Check Type B
1630.01	Riser Basin	1634.01	Temporary Rock Sediment Dam Type A
1630.02	Silt Basin Type B	1634.02	Temporary Rock Sediment Dam Type B
1630.03	Temporary Silt Ditch	1635.01	Rock Pipe Inlet Sediment Trap Type A
1630.04	Stilling Basin	1635.02	Rock Pipe Inlet Sediment Trap Type B
1630.05	Temporary Diversion	1640.01	Coir Fiber Baffle
1630.06	Special Stilling Basin	1645.01	Temporary Stream Crossing
1631.01	Matting Installation		

NOTE:
UTILIZE TEMPORARY SEDIMENT BASIN OR SPECIAL STILLING BASIN(S) AS STILLING BASIN WHERE APPLICABLE.

NOTES: ANY DEVIATION FROM OPTIONS GIVEN WILL REQUIRE PRIOR APPROVAL BY ENGINEER.

ADDITIONAL EROSION CONTROL DEVICES MAY NEED TO BE INSTALLED AS DIRECTED BY THE ENGINEER.

ROADSIDE ENVIRONMENTAL UNIT
DEPARTMENT OF TRANSPORTATION
DIVISION OF HIGHWAYS
RALEIGH, N.C.

2012 STANDARD SPECIFICATIONS

PROJECT NO. 17BP.4.R.42
NASH COUNTY
STATION: 13+75.00 -L-

REPLACES BRIDGE NO. 194

STATE OF NORTH CAROLINA
DEPARTMENT OF TRANSPORTATION
RALEIGH

BRIDGE ON SR 1300
OVER STONEY CREEK
BETWEEN SR 1301
& NC 58

30'-6" CLEAR ROADWAY - 90° SKEW

REVISIONS							SHEET NO.
NO.	BY:	DATE:	NO.	BY:	DATE:		EC-1
1			3				TOTAL SHEETS
2			4				35

6/12/2013 5:08:55 PM G:\Project\2009\200923.52\CLENT\Structures\Erosion Control\Nash 194-50-EC-01.dgn

PROJECT REFERENCE NO.	SHEET NO.
17BP.4.R.42	EC-2
R/W SHEET NO.	
ROADWAY DESIGN ENGINEER	HYDRAULICS ENGINEER

WATTLE WITH POLYACRYLAMIDE (PAM) DETAIL

ROADSIDE ENVIRONMENTAL UNIT
DEPARTMENT OF TRANSPORTATION
DIVISION OF HIGHWAYS
RALEIGH, N.C.

2012 STANDARD SPECIFICATIONS

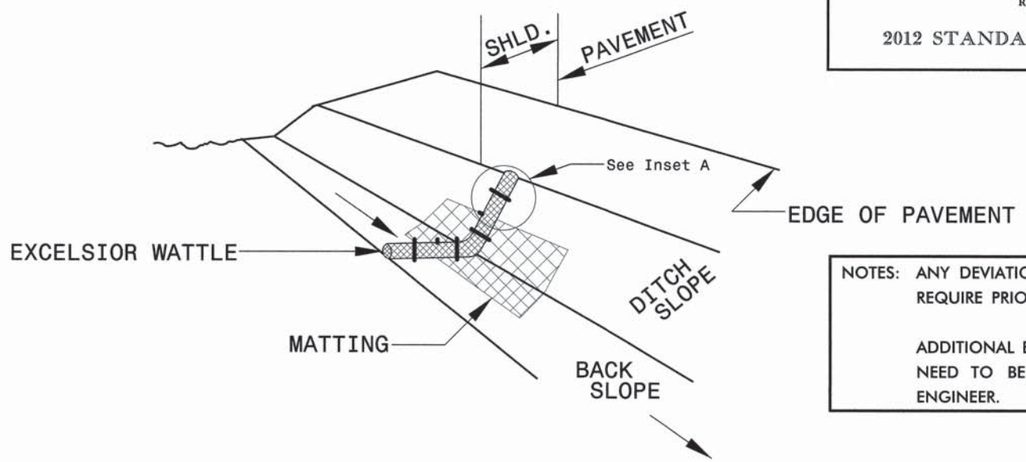

ISOMETRIC VIEW

NOTES: ANY DEVIATION FROM OPTIONS GIVEN WILL REQUIRE PRIOR APPROVAL BY ENGINEER.

ADDITIONAL EROSION CONTROL DEVICES MAY NEED TO BE INSTALLED AS DIRECTED BY THE ENGINEER.

NOTES:

USE MINIMUM 12 IN. DIAMETER EXCELSIOR WATTLE.

USE 2 FT. WOODEN STAKES WITH A 2 IN. BY 2 IN. NOMINAL CROSS SECTION.

ONLY INSTALL WATTLE(S) TO A HEIGHT IN DITCH SO FLOW WILL NOT WASH AROUND WATTLE AND SCOUR DITCH SLOPES AND AS DIRECTED.

INSTALL A MINIMUM OF 2 UPSLOPE STAKES AND 4 DOWNSLOPE STAKES AT AN ANGLE TO WEDGE WATTLE TO BOTTOM OF DITCH.

PROVIDE STAPLES MADE OF 0.125 IN. DIAMETER STEEL WIRE FORMED INTO A U SHAPE NOT LESS THAN 12″ IN LENGTH.

INSTALL STAPLES APPROXIMATELY EVERY 1 LINEAR FOOT ON BOTH SIDES OF WATTLE AND AT EACH END TO SECURE IT TO THE SOIL.

INSTALL MATTING IN ACCORDANCE WITH SECTION 1631 OF THE STANDARD SPECIFICATIONS.

PRIOR TO POLYACRYLAMIDE (PAM) APPLICATION, OBTAIN A SOIL SAMPLE FROM PROJECT LOCATION, AND FROM OFFSITE MATERIAL, AND ANALYZE FOR APPROPRIATE PAM FLOCCULANT TO BE APPLIED TO EACH WATTLE.

INITIALLY APPLY 2 OUNCES OF ANIONIC OR NEUTRALLY CHARGED PAM OVER WATTLE WHERE WATER WILL FLOW AND 1 OUNCE OF PAM ON MATTING ON EACH SIDE OF WATTLE. REAPPLY PAM AFTER EVERY RAINFALL EVENT THAT IS EQUAL TO OR EXCEEDS 0.50 IN.

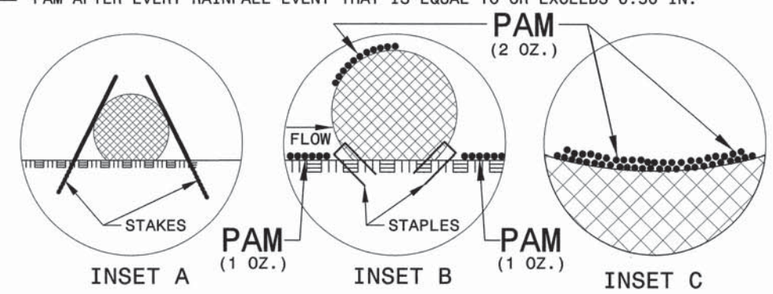

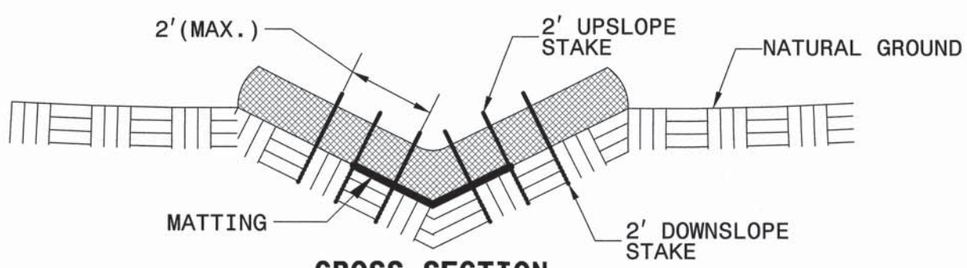

CROSS SECTION VEE DITCH

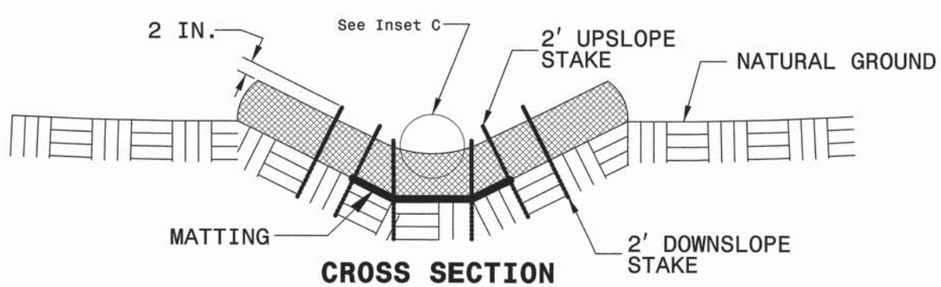

CROSS SECTION TRAPEZOIDAL DITCH

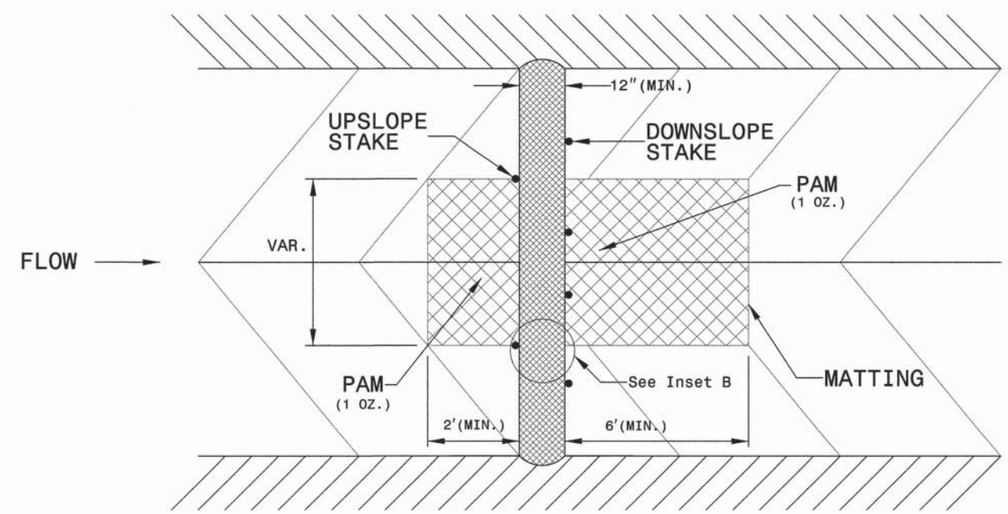

TOP VIEW

6/4/2013 3:02:54 PM G:\Project\2009\20092152\CLIENT\Structures\Erosion Control\WattleWithPAM_detail_englandn.dgn

PROJECT REFERENCE NO.	SHEET NO.
17BP.4.R.42	EC-3
ROADWAY DESIGN ENGINEER	HYDRAULICS ENGINEER

DIVISION OF HIGHWAYS
STATE OF NORTH CAROLINA

SOIL STABILIZATION TIMEFRAMES

SITE DESCRIPTION	STABILIZATION TIME	TIMEFRAME EXCEPTIONS
PERIMETER DIKES, SWALES, DITCHES AND SLOPES	7 DAYS	NONE
HIGH QUALITY WATER (HQW) ZONES	7 DAYS	NONE
SLOPES STEEPER THAN 3:1	7 DAYS	IF SLOPES ARE 10' OR LESS IN LENGTH AND ARE NOT STEEPER THAN 2:1, 14 DAYS ARE ALLOWED.
SLOPES 3:1 OR FLATTER	14 DAYS	7 DAYS FOR SLOPES GREATER THAN 50' IN LENGTH.
ALL OTHER AREAS WITH SLOPES FLATTER THAN 4:1	14 DAYS	NONE, EXCEPT FOR PERIMETERS AND HQW ZONES.

NOTES: ANY DEVIATION FROM OPTIONS GIVEN WILL REQUIRE PRIOR APPROVAL BY ENGINEER.

ADDITIONAL EROSION CONTROL DEVICES MAY NEED TO BE INSTALLED AS DIRECTED BY THE ENGINEER.

ROADSIDE ENVIRONMENTAL UNIT
DEPARTMENT OF TRANSPORTATION
DIVISION OF HIGHWAYS
RALEIGH, N.C.

2012 STANDARD SPECIFICATIONS

6/8/2015 3:03:28 PM G:\Project\2009\200923.52\CLIENT\Structures\Erosion Control\stabilization_guidelines_english.dgn

PROJECT REFERENCE NO.	SHEET NO.
17BP.4.R.42	EC-4
R/W SHEET NO.	
ROADWAY DESIGN ENGINEER	HYDRAULICS ENGINEER

PLANTING DETAILS

SEEDLING / LINER BAREROOT PLANTING DETAIL

HEALING IN

1. Locate a healing-in site in a shady, well protected area.
2. Excavate a flat bottom trench 12 inches deep and provide drainage.

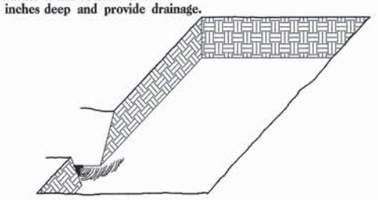

3. Backfill the trench with 2 inches well rotted sawdust. Place a 2 inch layer of well rotted sawdust at a sloping angle at one end of the trench.

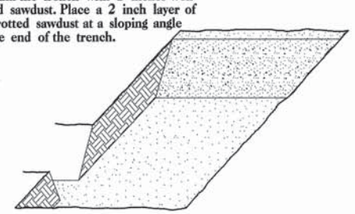

4. Place a single layer of plants against the sloping end so that the root collar is at ground level.

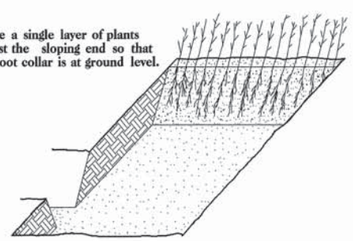

5. Place a 2 inch layer of well rotted sawdust over the roots maintaining a sloping angle.

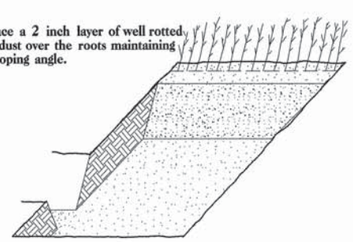

6. Repeat layers of plants and sawdust as necessary and water thoroughly.

DIBBLE PLANTING METHOD
USING THE KBC PLANTING BAR

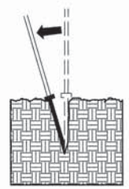

1. Insert planting bar as shown and pull handle toward planter.

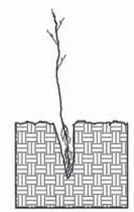

2. Remove planting bar and place seedling at correct depth.

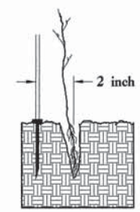

3. Insert planting bar 2 inches toward planter from seedling.

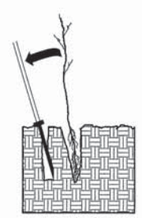

4. Pull handle of bar toward planter, firming soil at bottom.

5. Push handle forward firming soil at top.

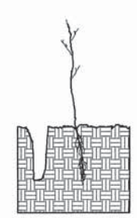

6. Leave compaction hole open. Water thoroughly.

PLANTING NOTES:

PLANTING BAG
During planting, seedlings shall be kept in a moist canvas bag or similar container to prevent the root systems from drying.

KBC PLANTING BAR
Planting bar shall have a blade with a triangular cross section, and shall be 12 inches long, 4 inches wide and 1 inch thick at center.

ROOT PRUNING
All seedlings shall be root pruned, if necessary, so that no roots extend more than 10 inches below the root collar.

REFORESTATION

☐ TREE REFORESTATION SHALL BE PLANTED 6 FT. TO 10 FT. ON CENTER, RANDOM SPACING, AVERAGING 8 FT. ON CENTER, APPROXIMATELY 680 PLANTS PER ACRE.

REFORESTATION

MIXTURE, TYPE, SIZE, AND FURNISH SHALL CONFORM TO THE FOLLOWING:

25% PLATANUS OCCIDENTALIS	AMERICAN SYCAMORE	12 in - 18 in BR
25% LIRIODENDRON TULIPIFERA	YELLOW POPLAR	12 in - 18 in BR
25% FRAXINUS PENNSYLVANICA	GREEN ASH	12 in - 18 in BR
25% QUERCUS ALBA	WHITE OAK	12 in - 18 in BR

NOTES: ANY DEVIATION FROM OPTIONS GIVEN WILL REQUIRE PRIOR APPROVAL BY ENGINEER.

ADDITIONAL EROSION CONTROL DEVICES MAY NEED TO BE INSTALLED AS DIRECTED BY THE ENGINEER.

ROADSIDE ENVIRONMENTAL UNIT
DEPARTMENT OF TRANSPORTATION
DIVISION OF HIGHWAYS
RALEIGH, N.C.

2012 STANDARD SPECIFICATIONS

REFORESTATION DETAIL SHEET

N.C.D.O.T. - ROADSIDE ENVIRONMENTAL UNIT

6/4/2013 3:04:06 PM G:\Project\2009\200923.52\CLIENT\Structures\Erosion Control\engreforest.dgn