09/08/99

TIP PROJECT: BD-5105P

CONTRACT: 45351.1.16

See Sheet 1-A For Index of Sheets

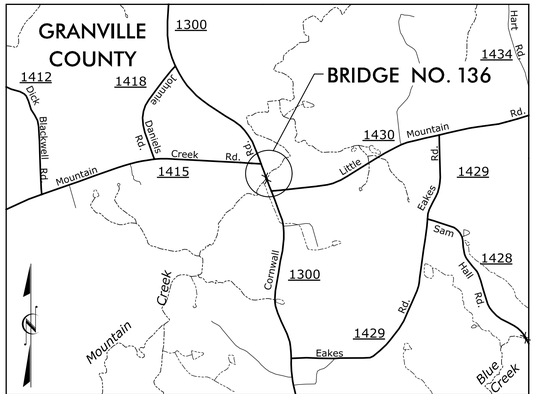

LOCATION MAP

SEE SHEET TCP-2 FOR DETOUR ROUTE

STATE OF NORTH CAROLINA
DIVISION OF HIGHWAYS

GRANVILLE COUNTY

STATE	STATE PROJECT REFERENCE NO.	SHEET NO.	TOTAL SHEETS
N.C.	BD-5105P	1	

STATE PROJ. NO.	F.A. PROJ. NO.	DESCRIPTION
45351.1.16	BRZ-1300 (12)	P.E.
45351.2.16	BRZ-1300 (12)	R/W
45351.3.16	BRZ-1300 (12)	CONST.

LOCATION: BRIDGE NO. 136 ON SR 1300 (CORNWALL RD.) OVER MOUNTAIN CREEK

TYPE OF WORK: GRADING, DRAINAGE, PAVING & STRUCTURE

NAD 83/ NSRS 2007

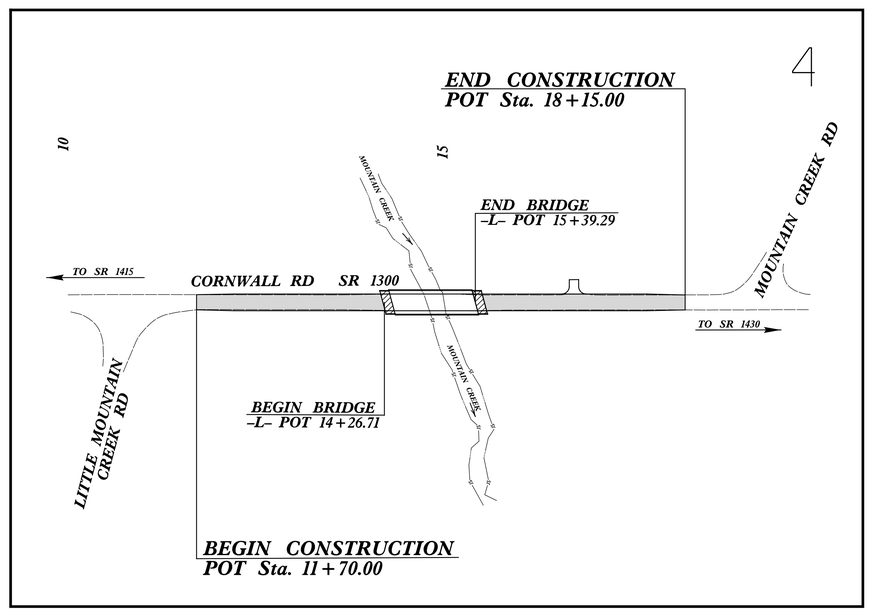

CLEARING ON THIS PROJECT SHALL BE PERFORMED TO THE LIMITS ESTABLISHED BY METHOD III

GRAPHIC SCALES

50 25 0 50 100
PLANS

50 25 0 50 100
PROFILE (HORIZONTAL)

10 5 0 10 20
PROFILE (VERTICAL)

DESIGN DATA

ADT 2011 = 1350
ADT 2031 = 2800
DHV = 10 %
D = 50 %
T = 6 % *
V = 55 MPH
* TTST = N/A DUAL N/A
FUNC CLASS =
LOCAL
SUB-REGIONAL TIER

PROJECT LENGTH

LENGTH ROADWAY STATE PROJECT BD-5105P	=	0.101 MILES
LENGTH STRUCTURES STATE PROJECT BD-5105P	=	0.021 MILES
TOTAL LENGTH STATE PROJECT BD-5105P	=	0.122 MILES

PREPARED FOR THE NORTH CAROLINA DEPARTMENT OF TRANSPORTATION IN THE OFFICE OF:

Florence & Hutcheson
An ICA Company
5121 Kingdom Way, Raleigh, NC 27607
NC License No: F-0258

2012 STANDARD SPECIFICATIONS

RIGHT OF WAY DATE:
APRIL 15, 2012

LETTING DATE:
JANUARY 9, 2013

DENNIS MORY, PE
PROJECT ENGINEER

HENRY BARE
PROJECT DESIGN ENGINEER

HYDRAULICS ENGINEER

NORTH CAROLINA PROFESSIONAL SEAL 34364 ENGINEER PRENTON J. CORNER

SIGNATURE: P.E. 12/10/12

ROADWAY DESIGN ENGINEER

NORTH CAROLINA PROFESSIONAL SEAL 20031 ENGINEER DENNIS JAMES MORY

SIGNATURE: P.E. 12/10/12

DIVISION OF HIGHWAYS
STATE OF NORTH CAROLINA

STATE OF NORTH CAROLINA DEPARTMENT OF TRANSPORTATION

P.E.
STATE HIGHWAY DESIGN ENGINEER

$$$$$$$$SYSTIME$$$$$$$$
$$$$$$$$USERNAME$$$$$$$$EDGN$$$$$$$$$$$$$$$$$$$$

8/17/99

PROJECT REFERENCE NO.	SHEET NO.
BD-5105P	1-A

Florence & Hutcheson
An ICA Company
5121 Kingdom Way, Raleigh, NC 27607
NC License No: F-0258

ROADWAY DESIGN ENGINEER

NORTH CAROLINA PROFESSIONAL SEAL 030391 ENGINEER DENNIS JAMES MORY

12/10/12

GENERAL NOTES

GENERAL NOTES: 2012 SPECIFICATIONS
EFFECTIVE: 01-17-12

GRADING AND SURFACING OR RESURFACING AND WIDENING:

THE GRADE LINES SHOWN DENOTE THE FINISHED ELEVATION OF THE PROPOSED SURFACING AT GRADE POINTS SHOWN ON THE TYPICAL SECTIONS. WHERE NO GRADE LINES ARE SHOWN, THE PROFILES SHOWN DENOTE THE TOP ELEVATION OF THE EXISTING PAVEMENT ALONG THE CENTER LINE OF SURVEY ON WHICH THE PROPOSED RESURFACING WILL BE PLACED. GRADE LINES MAY BE ADJUSTED BY THE ENGINEER IN ORDER TO SECURE A PROPER TIE-IN.

CLEARING:

CLEARING ON THIS PROJECT SHALL BE PERFORMED TO THE LIMITS ESTABLISHED BY METHOD III.

SHOULDER CONSTRUCTION:

ASPHALT, EARTH, AND CONCRETE SHOULDER CONSTRUCTION ON THE HIGH SIDE OF SUPERELEVATED CURVES SHALL BE IN ACCORDANCE WITH STD. NO. 560.01.

DRIVEWAYS:

DRIVEWAYS SHALL BE CONSTRUCTED IN ACCORDANCE WITH STD. 848.02 AT LOCATIONS SHOWN ON PLANS OR AS DIRECTED BY THE ENGINEER.

GUARDRAIL:

THE GUARDRAIL LOCATIONS SHOWN ON THE PLANS MAY BE ADJUSTED DURING CONSTRUCTION AS DIRECTED BY THE ENGINEER. THE CONTRACTOR SHOULD CONSULT WITH THE ENGINEER PRIOR TO ORDERING GUARDRAIL MATERIAL.

END BENTS:

THE SURVEYOR SHALL CHECK THE STRUCTURE END BENT PLANS, DETAILS, AND CROSS-SECTIONS PRIOR TO SETTING OF THE SLOPE STAKES FOR THE EMBANKMENT OR EXCAVATION APPROACHING A BRIDGE.

UTILITIES:

ANY RELOCATION OF EXISTING UTILITIES WILL BE ACCOMPLISHED BY OTHERS.

RIGHT-OF-WAY MARKERS:

ALL RIGHT-OF-WAY MARKERS ON THIS PROJECT SHALL BE PLACED BY CONTRACT.

ROADWAY STANDARD DRAWINGS

2012 ROADWAY ENGLISH STANDARD DRAWINGS

The following Roadway Standards as appear in "Roadway Standard Drawings" Highway Design Branch - N. C. Department of Transportation - Raleigh, N. C., Dated January, 2012 are applicable to this project and by reference hereby are considered a part of these plans:

STD.NO.	TITLE
DIVISION 2 - EARTHWORK	
200.03	Method of Clearing - Method III
225.02	Guide for Grading Subgrade - Secondary and Local
225.04	Method of Obtaining Superelevation - Two Lane Pavement
DIVISION 3 - PIPE CULVERTS	
300.01	Method of Pipe Installation
310.10	Driveway Pipe Construction
DIVISION 4 - MAJOR STRUCTURES	
422.11	Bridge Approach Fills - Sub Regional Tier
DIVISION 5 - SUBGRADE, BASES AND SHOULDERS	
560.01	Method of Shoulder Construction - High Side of Superelevated Curve - Method I
DIVISION 8 - INCIDENTALS	
806.01	Concrete Right-of-Way Marker
840.20	Frames and Wide Slot Flat Grates
840.35	Traffic Bearing Grated Drop Inlet - for Cast Iron Double Frame and Grates
840.46	Traffic Bearing Precast Drainage Structure
846.01	Concrete Curb, Gutter and Curb & Gutter
846.04	Drop Inlet Installation in Shoulder Berm Gutter
848.02	Driveway Turnout - Radius Type
862.01	Guardrail Placement
862.02	Guardrail Installation
862.03	Structure Anchor Units
876.02	Guide for Rip Rap at Pipe Outlets
876.04	Drainage Ditches with Class 'B' Rip Rap

INDEX OF SHEETS

SHEET NUMBER	SHEET
1	TITLE SHEET
1-A	INDEX OF SHEETS GENERAL NOTES LIST OF STANDARD DRAWINGS
1-B	CONVENTIONAL SYMBOLS
3	DRAINAGE SUMMARY GUARDRAIL SUMMARY SUMMARY OF EARTHWORK SUMMARY OF PAVEMENT REMOVAL SUMMARY OF SHOULDER BERM GUTTER
4	PLAN & PROFILE TYPICAL SECTIONS & PAVEMENT SCHEDULE PARCEL INDEX DRAINAGE DITCH DETAILS
TCP-1 THRU TCP-2	TRAFFIC CONTROL PLANS
EC-1 THRU EC-6	EROSION CONTROL PLANS
X-1 THRU X-4	CROSS-SECTIONS
S-1 THRU S-19	STRUCTURE PLANS
SN	STANDARD NOTES

09/08/09

PROJECT REFERENCE NO.	SHEET NO.
BD-5105P	1-B

Note: Not to Scale

****S.U.E. = Subsurface Utility Engineering***

STATE OF NORTH CAROLINA
DIVISION OF HIGHWAYS

CONVENTIONAL PLAN SHEET SYMBOLS

BOUNDARIES AND PROPERTY:

- State Line
- County Line
- Township Line
- City Line
- Reservation Line
- Property Line
- Existing Iron Pin — EIP
- Property Corner
- Property Monument — ECM
- Parcel/Sequence Number — 123
- Existing Fence Line
- Proposed Woven Wire Fence
- Proposed Chain Link Fence
- Proposed Barbed Wire Fence
- Existing Wetland Boundary — WLB
- Proposed Wetland Boundary — WLB
- Existing Endangered Animal Boundary — EAB
- Existing Endangered Plant Boundary — EPB

BUILDINGS AND OTHER CULTURE:

- Gas Pump Vent or U/G Tank Cap
- Sign — S
- Well — W
- Small Mine
- Foundation
- Area Outline
- Cemetery
- Building
- School
- Church
- Dam

HYDROLOGY:

- Stream or Body of Water
- Hydro, Pool or Reservoir
- Jurisdictional Stream — JS
- Buffer Zone 1 — BZ 1
- Buffer Zone 2 — BZ 2
- Flow Arrow
- Disappearing Stream
- Spring
- Wetland
- Proposed Lateral, Tail, Head Ditch — FLOW
- False Sump

RAILROADS:

- Standard Gauge — CSX TRANSPORTATION
- RR Signal Milepost — MILEPOST 35
- Switch — SWITCH
- RR Abandoned
- RR Dismantled

RIGHT OF WAY:

- Baseline Control Point
- Existing Right of Way Marker
- Existing Right of Way Line
- Proposed Right of Way Line — RW
- Proposed Right of Way Line with Iron Pin and Cap Marker — RW
- Proposed Right of Way Line with Concrete or Granite Marker — RW
- Existing Control of Access — CA
- Proposed Control of Access — CA
- Existing Easement Line — E
- Proposed Temporary Construction Easement — E
- Proposed Temporary Drainage Easement — TDE
- Proposed Permanent Drainage Easement — PDE
- Proposed Permanent Drainage / Utility Easement — DUE
- Proposed Permanent Utility Easement — PUE
- Proposed Temporary Utility Easement — TUE
- Proposed Permanent Easement with Iron Pin and Cap Marker

ROADS AND RELATED FEATURES:

- Existing Edge of Pavement
- Existing Curb
- Proposed Slope Stakes Cut — C
- Proposed Slope Stakes Fill — F
- Proposed Wheel Chair Ramp — WCR
- Existing Metal Guardrail
- Proposed Guardrail
- Existing Cable Guiderail
- Proposed Cable Guiderail
- Equality Symbol
- Pavement Removal

VEGETATION:

- Single Tree
- Single Shrub
- Hedge
- Woods Line
- Orchard
- Vineyard — Vineyard

EXISTING STRUCTURES:

MAJOR:

- Bridge, Tunnel or Box Culvert — CONC
- Bridge Wing Wall, Head Wall and End Wall — CONC WW

MINOR:

- Head and End Wall — CONC HW
- Pipe Culvert
- Footbridge
- Drainage Box: Catch Basin, DI or JB — CB
- Paved Ditch Gutter
- Storm Sewer Manhole — S
- Storm Sewer — S

UTILITIES:

POWER:

- Existing Power Pole
- Proposed Power Pole
- Existing Joint Use Pole
- Proposed Joint Use Pole
- Power Manhole — P
- Power Line Tower
- Power Transformer
- U/G Power Cable Hand Hole — HH
- H-Frame Pole
- Recorded U/G Power Line — P
- Designated U/G Power Line (S.U.E.*) — P

TELEPHONE:

- Existing Telephone Pole
- Proposed Telephone Pole
- Telephone Manhole — T
- Telephone Booth
- Telephone Pedestal — T
- Telephone Cell Tower
- U/G Telephone Cable Hand Hole — HH
- Recorded U/G Telephone Cable — T
- Designated U/G Telephone Cable (S.U.E.*) — T
- Recorded U/G Telephone Conduit — TC
- Designated U/G Telephone Conduit (S.U.E.*) — TC
- Recorded U/G Fiber Optics Cable — T FO
- Designated U/G Fiber Optics Cable (S.U.E.*) — T FO

WATER:

- Water Manhole — W
- Water Meter
- Water Valve
- Water Hydrant
- Recorded U/G Water Line — W
- Designated U/G Water Line (S.U.E.*) — W
- Above Ground Water Line — A/G Water

TV:

- TV Satellite Dish
- TV Pedestal — C
- TV Tower
- U/G TV Cable Hand Hole — HH
- Recorded U/G TV Cable — TV
- Designated U/G TV Cable (S.U.E.*) — TV
- Recorded U/G Fiber Optic Cable — TV FO
- Designated U/G Fiber Optic Cable (S.U.E.*) — TV FO

GAS:

- Gas Valve
- Gas Meter
- Recorded U/G Gas Line — G
- Designated U/G Gas Line (S.U.E.*) — G
- Above Ground Gas Line — A/G Gas

SANITARY SEWER:

- Sanitary Sewer Manhole
- Sanitary Sewer Cleanout
- U/G Sanitary Sewer Line — SS
- Above Ground Sanitary Sewer — A/G Sanitary Sewer
- Recorded SS Forced Main Line — FSS
- Designated SS Forced Main Line (S.U.E.*) — FSS

MISCELLANEOUS:

- Utility Pole
- Utility Pole with Base
- Utility Located Object
- Utility Traffic Signal Box — S
- Utility Unknown U/G Line — ?UTL
- U/G Tank; Water, Gas, Oil
- A/G Tank; Water, Gas, Oil
- U/G Test Hole (S.U.E.*)
- Abandoned According to Utility Records — AATUR
- End of Information — E.O.I.

12/06/07

COMPUTED BY: ________________ DATE: ________________
CHECKED BY: ________________ DATE: ________________

STATE OF NORTH CAROLINA
DIVISION OF HIGHWAYS

PROJECT REFERENCE NO.	SHEET NO.
BD-5105P	3

SUMMARY OF EARTHWORK

STATION	STATION	UNCL. EXCAV.	EMBANK. +%	BORROW	WASTE
-L- 11+70.00	-L- 14+26	20	296	276	
	SUBTOTAL	20	296	276	
-L- 15+39	-L- 18+15	37	158	121	
	SUBTOTAL	37	158	121	
SUMMARY TOTALS		57	454	397	
WASTE TO BE USED IN LIEU OF BORROW					
SHOULDER CONSTRUCTION			30	30	
PROJECT TOTALS		57		427	
5% TO REPLACE TOPSOIL IN BORROW PIT				22	
GRAND TOTALS		57		449	
SAY		57		449	

PAVEMENT REMOVAL SUMMARY

SURVEY LINE	STATION	STATION	LOCATION LT/RT/CL	YD²
-L-	11+70	14+32 (EX. BRIDGE)	CL	583
-L-	15+25 (EX. BRIDGE)	18+15	CL	645
			TOTAL:	1228
			SAY:	1230

SHOULDER BERM GUTTER SUMMARY

SURVEY LINE	STATION	STATION	LENGTH
-L-	15+46 LT	15+68 LT	22
-L-	15+54 RT	15+73 RT	19
		TOTAL:	41
		SAY:	41

LIST OF PIPES, ENDWALLS, ETC. (FOR PIPES 48" & UNDER)

DRAINAGE PIPE (RCP, CSP, CAAP, HDPE, or PVC) — NOTE: DO NOT USE CAAP, HDPE or PVC

STATION	LOCATION (LT,RT, OR CL)	STRUCTURE NO. FROM	STRUCTURE NO. TO	TOP ELEVATION	INVERT ELEVATION	INVERT ELEVATION	SLOPE CRITICAL	DRAINAGE PIPE 12"	15"	18"	24"	30"	36"	42"	48"
15+63	LT	0401		399.8											
15+68	RT	0402		399.8											
		0401	0402		396.2	396.0									
15+68	RT	0402	0403		396.0	393.2			20						
16+68	LT	0404													
					PROJECT	TOTAL			20						
						SAY			20						

C.S. PIPE (UNLESS NOTED OTHERWISE); CLASS IV R.C. PIPE (UNLESS OTHERWISE NOTED)

STATION	C.S. PIPE 12" (.064)	15" (.064)	18" (.064)	24" (.064)	30" (.079)	36" (.079)	42" (.109)	48" (.109)	CLASS IV R.C. PIPE 12"	15"	18"	24"	30"	36"	42"	48"
15+63																
15+68																
										28						
15+68																
16+68																
PROJECT TOTAL										28						
SAY										28						

ENDWALLS: STD. 838.01, STD. 838.11 OR STD. 838.80 (UNLESS NOTED OTHERWISE). QUANTITIES FOR DRAINAGE STRUCTURES: * TOTAL L.F. FOR PAY QUANTITY SHALL BE COL. 'A' + (1.3 X COL.'B'). FRAME, GRATES AND HOOD STANDARD 840.03

STATION	15" SIDE DRAIN PIPE	18" SIDE DRAIN PIPE	24" SIDE DRAIN PIPE	ENDWALLS CU. YDS. R.C.P.	ENDWALLS CU. YDS. C.S.P.	PER EACH (0' THRU 5.0')	LIN. *FT. A: 5.0' THRU 10.0'	LIN. *FT. B: 10.0' AND ABOVE	C.B. STD. 840.01 OR STD. 840.02	TYPE OF GRATE E	F	G	
15+63						1							
15+68						1							
15+68													
16+68		32											
PROJECT TOTAL		32				2							
SAY		32				2							

STATION	D.I. STD. 840.14 OR STD. 840.15	D.I. FRAME & GRATE STD. 840.16	G.D.I. TYPE "A" STD. 840.17 OR 840.26	G.D.I. TYPE "B" STD. 840.18 OR 840.27	G.D.I. TYPE "D" STD. 840.19 OR 840.28	G.D.I. FRAME WITH GRATE STD. 840.22	G.D.I. FRAME WITH TWO GRATES STD. 840.22	G.D.I. (N.S.) FRAME WITH GRATE STD. 840.24	G.D.I. (N.S.) FRAME WITH TWO GRATES STD. 840.24	J.B. STD. 840.31 OR 840.32	T.B.D.I. STD. 840.35	G.D.I. FRAME WITH TWO GRATES STD. 840.20						15" CORR. STEEL ELBOWS NO. & SIZE	CONC. COLLARS CL. "B" C.Y. STD. 840.72	CONC. & BRICK PIPE PLUG, C.Y. STD. 840.71	PIPE REMOVAL LIN.FT.	REMARKS
15+63											1	1										
15+68											1	1										
15+68																						
16+68																					28	
PROJECT TOTAL											2	2									28	
SAY											2	2									28	

ABBREVIATIONS

C.B.	CATCH BASIN
N.D.I.	NARROW DROP INLET
D.I.	DROP INLET
G.D.I.	GRATED DROP INLET
G.D.I. (N.S.)	GRATED DROP INLET (NARROW SLOT)
J.B.	JUNCTION BOX
M.H.	MANHOLE
T.B.D.I.	TRAFFIC BEARING DROP INLET
T.B.J.B.	TRAFFIC BEARING JUNCTION BOX

"N" = DISTANCE FROM EDGE OF LANE TO FACE OF GUARDRAIL.
TOTAL SHOULDER WIDTH = DISTANCE FROM EDGE OF TRAVEL LANE TO SHOULDER BREAK POINT.
FLARE LENGTH = DISTANCE FROM LAST SECTION OF PARALLEL GUARDRAIL TO END OF GUARDRAIL.
W = TOTAL WIDTH OF FLARE FROM BEGINNING OF TAPER TO END OF GUARDRAIL.
G = GATING IMPACT ATTENUATOR TYPE 350
NG = NON-GATING IMPACT ATTENUATOR TYPE 350

GUARDRAIL SUMMARY

SURVEY LINE	BEG. STA.	END STA.	LOCATION	LENGTH STRAIGHT	LENGTH SHOP CURVED	LENGTH DOUBLE FACED	WARRANT POINT APPROACH END	WARRANT POINT TRAILING END	"N" DIST. FROM E.O.L.	TOTAL SHOUL. WIDTH	FLARE LENGTH APPROACH END	FLARE LENGTH TRAILING END	W APPROACH END	W TRAILING END	ANCHORS TYPE III	XI	GRAU 350	M-350	XIII	CAT-1	VI MOD	BIC	AT-1	IMPACT ATTENUATOR TYPE 350 EA	G	NG	SINGLE FACED GUARDRAIL	REMOVE EXISTING GUARDRAIL	REMOVE AND STOCKPILE EXISTING GUARDRAIL	REMARKS
-L-	13+44.5	14+32	RT	87.5			14+32		4.42	7.42	50		1		1		1													
-L-	13+35.5	14+23	LT	87.5				14+23	4.42	7.42		50		1	1		1													
-L-	15+54	16+41.5	RT	87.5				15+18.19	4.42	7.42		50		1	1		1													
-L-	15+46	16+21	LT	75			15+18.19		4.42	7.42	50		1		1		1													
			SUBTOTAL	337.5											4		4		ANCHOR DEDUCTIONS											
			LESS ANCHORS	(-) 275																TYPE III = 4 @ 18.75 =	75.00									
			TOTAL	62.5																GRAU 350 = 4 @ 50.00 =	200.00									
			SAY	75			ADDITIONAL GUARDRAIL POSTS = 5 EA													TOTAL =	275.00									

$$$$SYSTIME$$$$
$$$$DGN$$$$
$$$$USERNAME$$$$

8/17/99

DATUM DESCRIPTION

THE LOCALIZED COORDINATE SYSTEM DEVELOPED FOR THIS PROJECT IS BASED ON THE STATE PLANE COORDINATES ESTABLISHED BY OTHERS FOR MONUMENT "BL-2"
WITH NAD 83/NSRS 2007 STATE PLANE GRID COORDINATES OF
NORTHING: 982164.04(ft) EASTING: 2101597.55(ft)
ELEVATION: 404.06(ft)
THE AVERAGE COMBINED GRID FACTOR USED ON THIS PROJECT (GROUND TO GRID) IS: 0.999923726
THE N.C. LAMBERT GRID BEARING AND LOCALIZED HORIZONTAL GROUND DISTANCE FROM "BL-2" TO -L- STATION IS

ALL LINEAR DIMENSIONS ARE LOCALIZED HORIZONTAL DISTANCES
VERTICAL DATUM USED IS NAVD 88

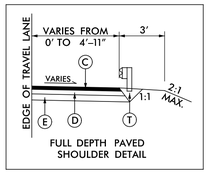

FULL DEPTH PAVED SHOULDER DETAIL

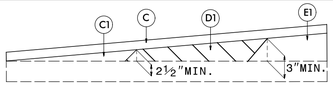

WEDGING DETAIL

BL NO.	NORTH	EAST	ELEVATION	-L- STATION	OFFSET
BL-1	N 981294.83	E 2101979.94	398.21'	10+15.65	24.63' RT
BL-2	N 982164.04	E 2101597.55	404.06'	19+64.10	25.09' LT

BM#1
RR SPIKE SET IN 24" SWEET GUM
-L- STA 12+90.62 66.33' LT.
ELEV = 395.45'

-L- COORDINATE LIST

STATION	NORTH	EAST
10+00	N 981271.47	E 2101962.43
11+00	N 981365.01	E 2101927.05
12+00	N 981458.54	E 2101891.67
13+00	N 981552.07	E 2101856.29
14+00	N 981645.60	E 2101820.91
15+00	N 981739.13	E 2101785.53
16+00	N 981832.66	E 2101750.15
17+00	N 981926.20	E 2101714.77
18+00	N 982019.73	E 2101679.38

PAVEMENT SCHEDULE

C	PROP. APPROX. 1½" ASPHALT CONCRETE SURFACE COURSE, TYPE SF9.5A, AT AN AVERAGE RATE OF 165 LBS. PER SQ. YD.
C1	PROP. VAR. DEPTH ASPHALT CONCRETE SURFACE COURSE, TYPE SF9.5A, AT AN AVERAGE RATE OF 110 LBS. PER SQ. YD. PER 1" DEPTH. TO BE PLACED IN LAYERS NOT TO EXCEED 1½" IN DEPTH.
D	PROP. APPROX. 3½" ASPHALT CONCRETE INTERMEDIATE COURSE, TYPE I19.0B, AT AN AVERAGE RATE OF 399 LBS. PER SQ. YD.
D1	PROP. VAR. DEPTH ASPHALT CONCRETE INTERMEDIATE COURSE, TYPE I19.0B, AT AN AVERAGE RATE OF 114 LBS. PER SQ. YD. PER 1" DEPTH. TO BE PLACED IN LAYERS NOT LESS THAN 2½" IN DEPTH OR GREATER THAN 4" IN DEPTH.
E	PROP. APPROX. 4" ASPHALT CONCRETE BASE COURSE, TYPE B25.0B, AT AN AVERAGE RATE OF 456 LBS. PER SQ. YD.
E1	PROP. VAR. DEPTH ASPHALT CONCRETE BASE COURSE, TYPE B25.0B, AT AN AVERAGE RATE OF 114 LBS. PER SQ. YD. PER 1" DEPTH. TO BE PLACED IN LAYERS NOT LESS THAN 3" IN DEPTH OR GREATER THAN 5½" IN DEPTH.
T	EARTH MATERIAL
W	PAVEMENT WEDGING

NOTE:FULL DEPTH PAVED SHOULDER REQUIRED AT GUARDRAIL LOCATIONS (SEE FULL DEPTH PAVED SHOULDER DETAIL)

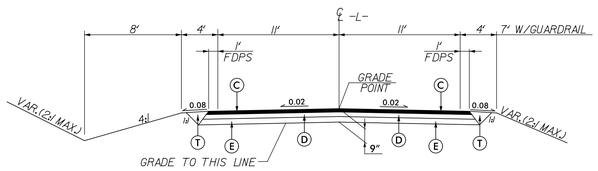

TYPICAL SECTION No.1
-L- STA 11+70.00 TO -L- STA 14+26.71 (BRIDGE)
-L- STA 15+39.29 (BRIDGE) TO -L- STA 18+15.00

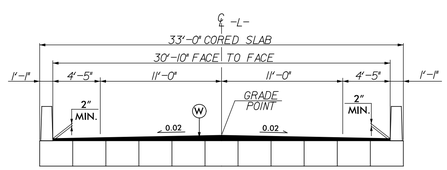

TYPICAL SECTION OF STRUCTURE

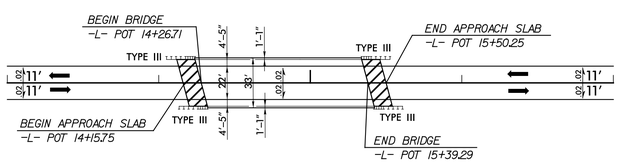

BRIDGE SKETCH

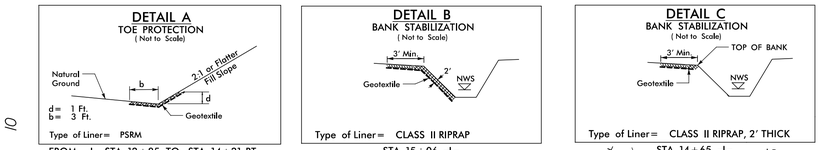

FROM -L- STA. 12+85 TO STA. 14+21 RT. STA. 15+06 -L- STA. 14+65 -L-

Florence & Hutcheson
An ICA Company
5121 Kingdom Way, Raleigh, NC 27607
NC License No: F-0258

PROJECT REFERENCE NO.	SHEET NO.
BD-5105P	4
R/W SHEET NO.	

ROADWAY DESIGN ENGINEER — NORTH CAROLINA PROFESSIONAL SEAL 2005 ENGINEER DENNIS JAMES MARTIN — 12/10/12

HYDRAULICS ENGINEER — NORTH CAROLINA PROFESSIONAL SEAL 34364 ENGINEER TIMOTHY J. CORMIER — 12/10/12

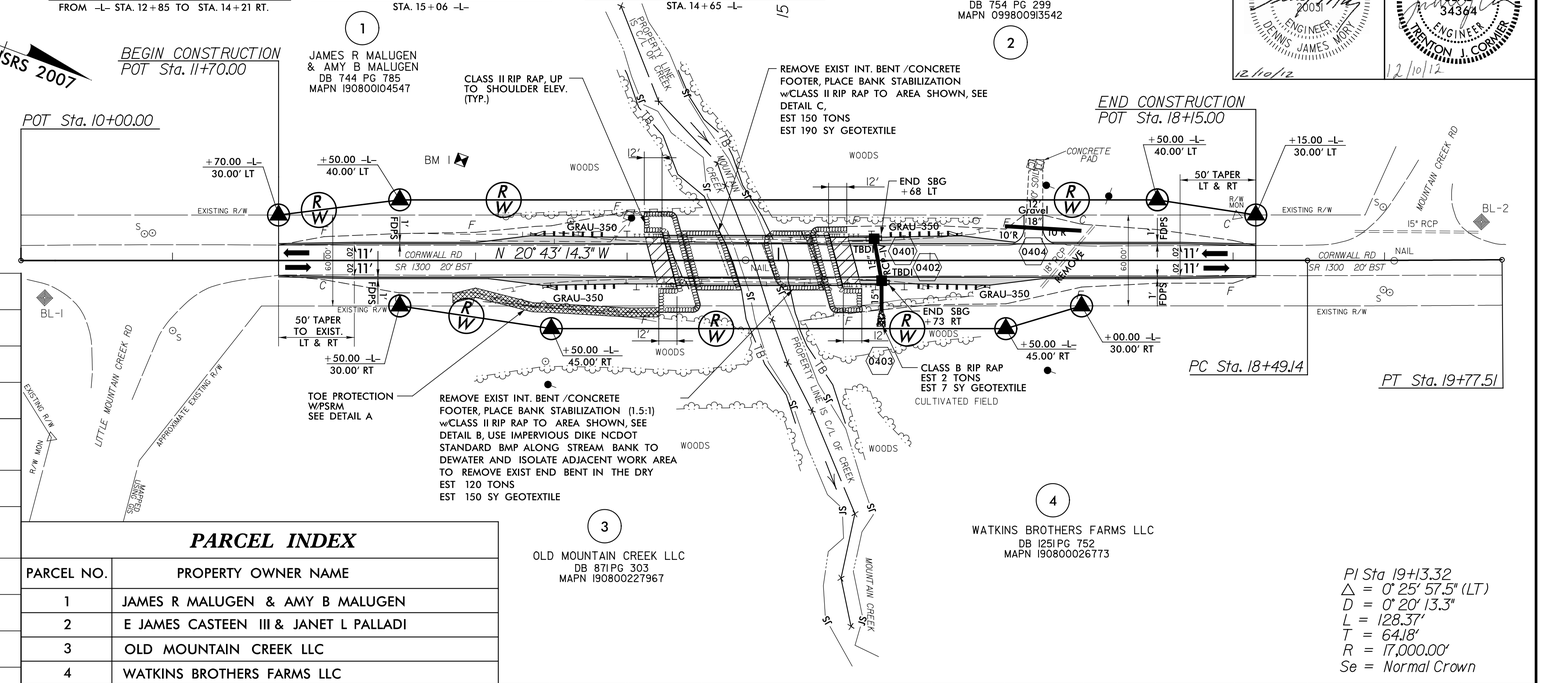

PARCEL INDEX

PARCEL NO.	PROPERTY OWNER NAME
1	JAMES R MALUGEN & AMY B MALUGEN
2	E JAMES CASTEEN III & JANET L PALLADI
3	OLD MOUNTAIN CREEK LLC
4	WATKINS BROTHERS FARMS LLC

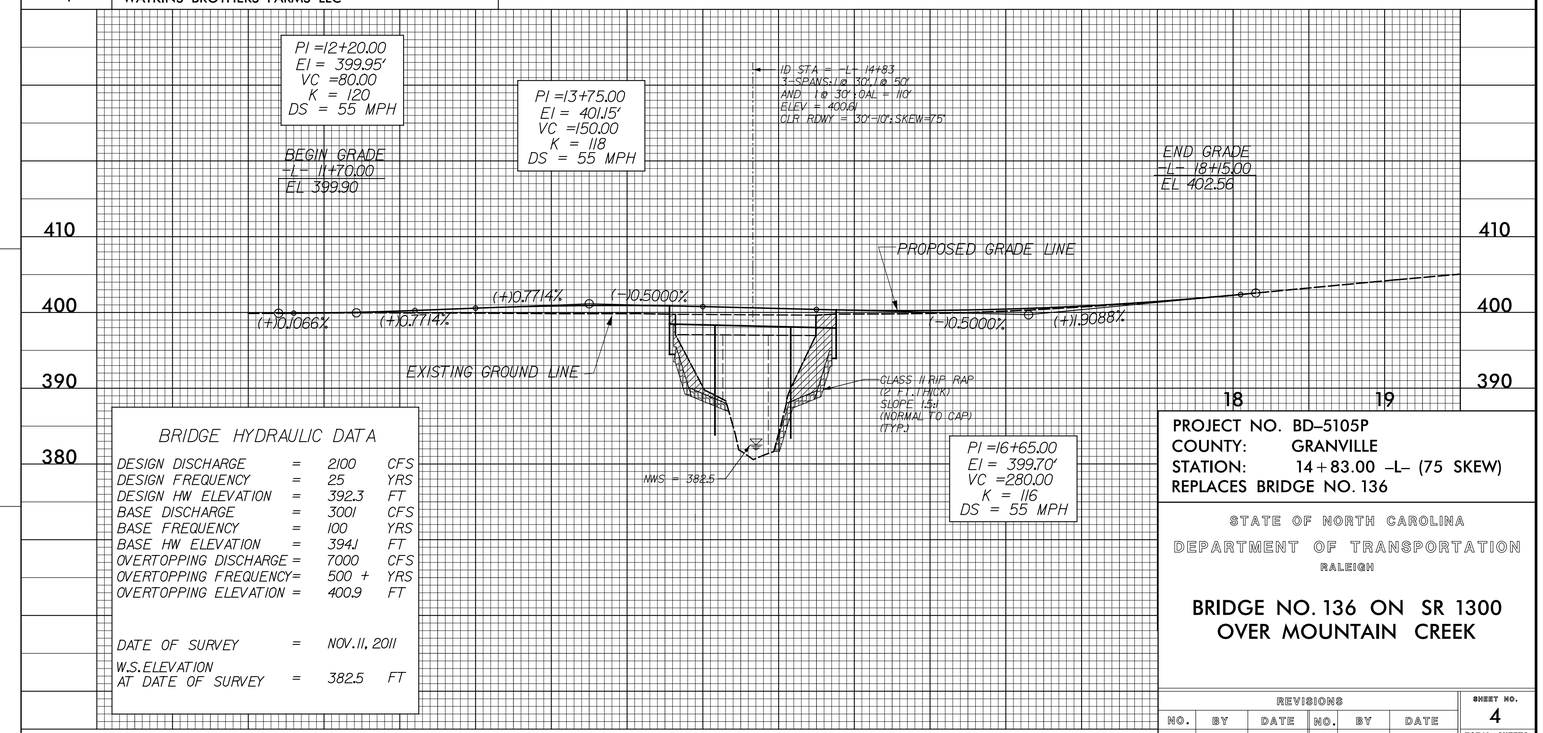

BRIDGE HYDRAULIC DATA

DESIGN DISCHARGE	=	2100	CFS
DESIGN FREQUENCY	=	25	YRS
DESIGN HW ELEVATION	=	392.3	FT
BASE DISCHARGE	=	3001	CFS
BASE FREQUENCY	=	100	YRS
BASE HW ELEVATION	=	394.1	FT
OVERTOPPING DISCHARGE	=	7000	CFS
OVERTOPPING FREQUENCY	=	500 +	YRS
OVERTOPPING ELEVATION	=	400.9	FT
DATE OF SURVEY	=	NOV. 11, 2011	
W.S. ELEVATION AT DATE OF SURVEY	=	382.5	FT

PROJECT NO. BD-5105P
COUNTY: GRANVILLE
STATION: 14+83.00 -L- (75 SKEW)
REPLACES BRIDGE NO. 136

STATE OF NORTH CAROLINA
DEPARTMENT OF TRANSPORTATION
RALEIGH

BRIDGE NO. 136 ON SR 1300 OVER MOUNTAIN CREEK

REVISIONS						SHEET NO.
NO.	BY	DATE	NO.	BY	DATE	4
1			3			TOTAL SHEETS
2			4			

GENERAL NOTES

CHANGES MAY BE REQUIRED WHEN PHYSICAL DIMENSIONS IN THE DETAIL DRAWINGS, STANDARD DETAILS, AND ROADWAY DETAILS ARE NOT ATTAINABLE TO MEET FIELD CONDITIONS OR RESULT IN DUPLICATE OR UNDESIRED OVERLAPPING OF DEVICES. MODIFICATION MAY INCLUDE: MOVING, SUPPLEMENTING, COVERING, OR REMOVAL OF DEVICES AS DIRECTED BY THE ENGINEER.

THE FOLLOWING GENERAL NOTES APPLY AT ALL TIMES FOR THE DURATION OF THE CONSTRUCTION PROJECT EXCEPT WHEN OTHERWISE NOTED IN THE PLAN OR DIRECTED BY THE ENGINEER.

LANE AND SHOULDER CLOSURE REQUIREMENTS

A) WHEN PERSONNEL AND/OR EQUIPMENT ARE WORKING WITHIN 15 FT OF AN OPEN TRAVEL LANE, CLOSE THE NEAREST OPEN SHOULDER USING ROADWAY STANDARD DRAWING NO. 1101.04 UNLESS THE WORK AREA IS PROTECTED BY BARRIER OR GUARDRAIL OR A LANE CLOSURE IS INSTALLED.

TRAFFIC PATTERN ALTERATIONS

B) NOTIFY THE ENGINEER THIRTY (30) CALENDAR DAYS PRIOR TO ANY TRAFFIC PATTERN ALTERATION.

SIGNING

C) PROVIDE SIGNING AND DEVICES REQUIRED TO CLOSE THE ROAD ACCORDING TO THE ROADWAY STANDARD DRAWINGS AND TRAFFIC CONTROL PLANS.

PROVIDE SIGNING REQUIRED FOR THE OFF-SITE DETOUR ROUTE AS SHOWN IN THE TRAFFIC CONTROL PLANS.

D) COVER OR REMOVE ALL SIGNS AND DEVICES REQUIRED TO CLOSE THE ROAD WHEN ROAD CLOSURE IS NOT IN OPERATION.

COVER OR REMOVE ALL SIGNS REQUIRED FOR THE OFF-SITE DETOUR WHEN THE DETOUR IS NOT IN OPERATION.

E) ENSURE ALL NECESSARY SIGNING IS IN PLACE PRIOR TO ALTERING ANY TRAFFIC PATTERN.

TRAFFIC CONTROL DEVICES

F) PLACE TYPE III BARRICADES, WITH "ROAD CLOSED" SIGN R11-2 ATTACHED, OF SUFFICIENT LENGTH TO CLOSE ENTIRE ROADWAY.

PAVEMENT MARKING AND MARKERS

G) INSTALL PAVEMENT MARKINGS ON THE FINAL SURFACE AS FOLLOWS:

ROAD NAME	MARKING
SR 1300 (CORNWALL RD)	PAINT

H) INSTALL PAVEMENT MARKINGS ON THE FINAL SURFACE ACCORDING TO THE ROADWAY STANDARDS.

I) TIE PROPOSED PAVEMENT MARKING LINES TO EXISTING PAVEMENT MARKING LINES.

MISCELLANEOUS

J) MAINTAIN ACCESS TO ALL RESIDENCES AND BUSINESSES BETWEEN THE CLOSURE POINTS AT ALL TIMES DURING CONSTRUCTION.

ROADWAY STANDARD DRAWINGS

THE FOLLOWING ROADWAY STANDARDS AS APPEAR IN "ROADWAY STANDARD DRAWINGS" - PROJECT SERVICES UNIT - N.C. DEPARTMENT OF TRANSPORTATION - RALEIGH, N.C., DATED JANUARY 2012 ARE APPLICABLE TO THIS PROJECT AND BY REFERENCE HEREBY ARE CONSIDERED A PART OF THESE PLANS:

STD. NO.	TITLE
1101.03	TEMPORARY ROAD CLOSURES
1101.04	TEMPORARY SHOULDER CLOSURES
1110.02	PORTABLE WORK ZONE SIGNS
1145.01	BARRICADES
1205.01	PAVEMENT MARKINGS - LINE TYPES AND OFFSETS
1205.02	PAVEMENT MARKINGS - TWO LANE AND MULTILANE ROADWAYS
1205.12	PAVEMENT MARKINGS - BRIDGES
1261.01	GUARDRAIL AND BARRIER DELINEATORS - INSTALLATION SPACING
1261.02	GUARDRAIL AND BARRIER DELINEATORS - TYPES AND MOUNTING
1262.01	GUARDRAIL END DELINEATION

PHASING

STEP 1

USING ROADWAY STANDARD DRAWING NUMBER 1101.04, SHEET 1 OF 1, INSTALL ALL DETOUR SIGNING KEEPING SIGNS COVERED.

STEP 2

PRIOR TO CLOSING SR 1300 (CORNWALL ROAD), UNCOVER ALL DETOUR SIGNING AND OPEN DETOUR TO TRAFFIC.

USING ROADWAY STANDARD DRAWING NUMBER 1101.03, SHEET 1 OF 9, CLOSE SR 1300 (CORNWALL RD.).

STEP 3

DISMANTLE AND REMOVE EXISTING BRIDGE.

STEP 4

COMPLETE CONSTRUCTION OF PROPOSED STRUCTURE, APPROACH ROADWAY TIE-INS, AND ASSOCIATED ITEMS.

STEP 5

PLACE FINAL PAVEMENT MARKINGS ON SR 1300 (CORNWALL RD.) AND OPEN TO TRAFFIC.

STEP 6

USING ROADWAY STANDARD DRAWING NUMBER 1101.04, SHEET 1 OF 1, REMOVE ALL DETOUR SIGNING AND ALL TRAFFIC CONTROL DEVICES.

TEMPORARY PAVEMENT MARKING SCHEDULE

DESCRIPTION	PAY ITEM
WHITE STOP BAR (2X)	PAINT (24")

FINAL PAVEMENT MARKING SCHEDULE

DESCRIPTION	PAY ITEM
WHITE EDGELINE (2X)	PAINT (4")
DOUBLE YELLOW CENTER LINE (2X)	PAINT (4")

APPROVED: Michael T. Rzepka DATE: 12-10-12

SEAL

NORTH CAROLINA PROFESSIONAL SEAL 15876 ENGINEER MICHAEL T. RZEPKA

GENERAL NOTES, PHASING, ROADWAY STANDARD DRAWINGS, PAVEMENT MARKING SCHEDULES

SCALE:	NONE
DATE:	DEC. '12
DWG. BY:	YTM
DESIGN BY:	TAG
REVIEWED BY:	MTR

REVISIONS

CADD FILE

12/10/2012
P:\LBRprojects\Div05\BD-5105P\Traffic\TrafficControl\TCP\bd5105p_tcp_tcp1.dgn

Florence & Hutcheson An ICA Company 5121 Kingdom Way, Suite 100 Raleigh, NC 27607 NC License No: F-0258	PROJ. REFERENCE NO.	SHEET NO.
	BD-5105P	TCP-2

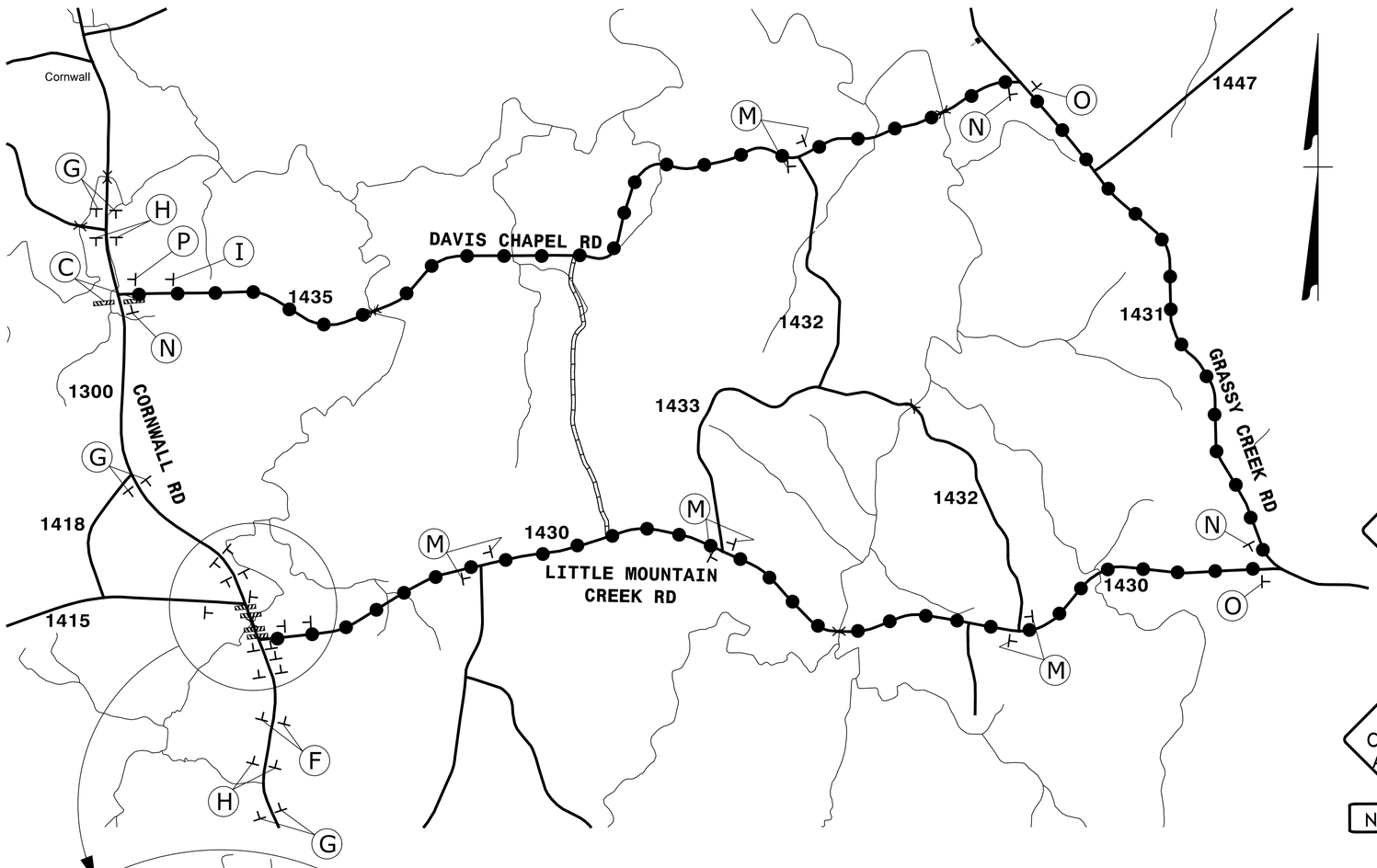

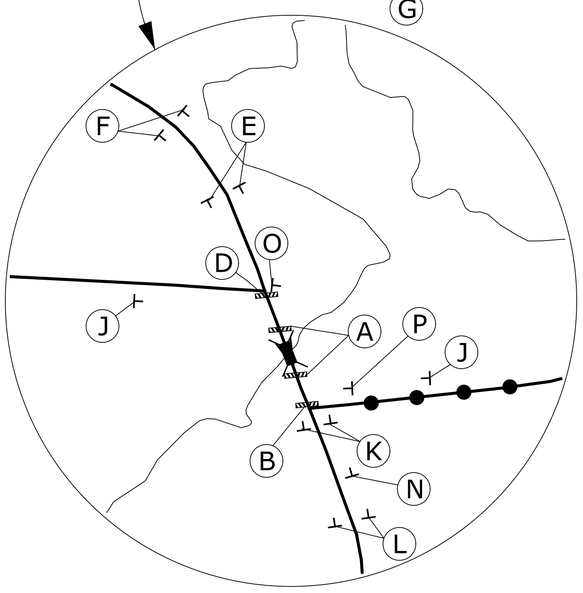

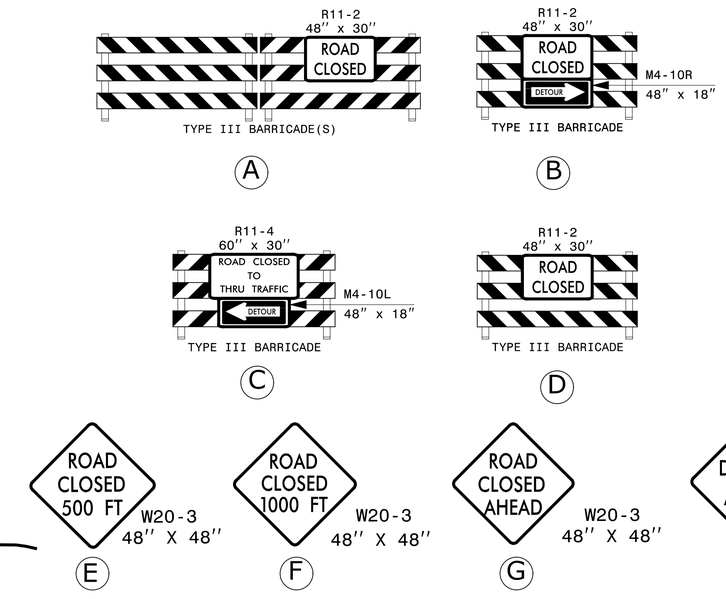

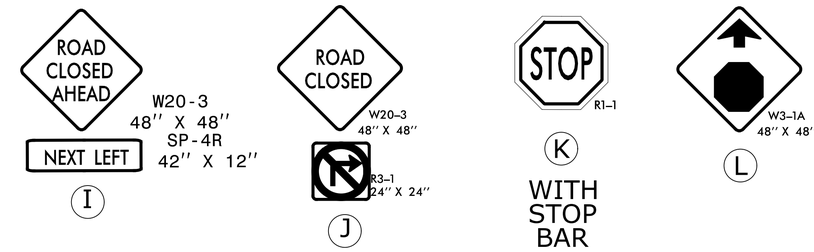

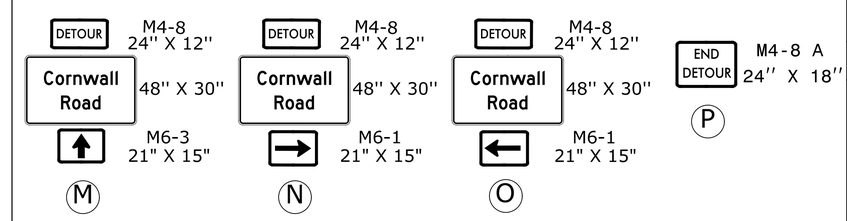

SIGN NUMBER: name
TYPE: STATIONARY
QUANTITY: SEE PLANS

SIGN WIDTH: 3'-0"
HEIGHT: 2'-0"
TOTAL AREA: 6.0 Sq.Ft.

BORDER TYPE: INSET
RECESS: 0.5"
WIDTH: 0.5"
RADII: 3"

NO. Z BARS:
LENGTH:

BACKG COLOR: Fluorescent Orange
COPY COLOR: Black

SYMBOL	X	Y	WID	HT

MAT'L: 0.080" (2.0 mm) ALUMINUM

USE NOTES: 1,2

1. Legend and border shall be direct applied black non-reflective sheeting.
2. Background shall be NC GRADE C fluoresent orange retroreflective sheeting.

DESIGN BY: TAG
PROJECT ID: ID
CHECKED BY:
DIV: DIV 5
DATE: Dec 10, 2012

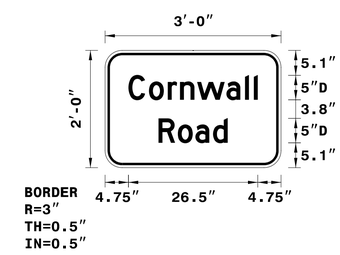

Spacing Factor is 1 unless specified otherwise

LETTER POSITIONS

Letter spacings are to start of next letter

												Series/Size Text Length
	C	o	r	n	w	a	l	l				D 2000
4.8	4.2	3.9	2.5	3.5	6	3.8	1.8	0.8	4.8			26.5
	R	o	a	d								D 2000
10.9	4	3.6	3.6	3	10.9							14.2

NORTH CAROLINA D.O.T. SIGN DETAIL

LEGEND

DETOUR ROUTE

APPROVED: Michael T. Kiepka DATE: 2-10-12

SEAL

DETOUR FOR CORNWALL RD CLOSURE

SCALE:	NONE
DATE:	DEC. '12
DWG. BY:	YTM
DESIGN BY:	TAG
REVIEWED BY:	MTR

REVISIONS

CADD FILE

12/10/2012
P:\LIBRProjects\Div05\BD-5105P\Traffic\TrafficControl\TCP\DETOUR.dgn

GRAPHIC SCALE

50 0 50 100

PROJECT REFERENCE NO.	SHEET NO.
BD-5105P	EC-1/CONST.4
R/W SHEET NO.	___
ROADSIDE ENVIRONMENTAL PROJECT ENGINEER	

LEVEL III CERTIFIED BY:
ALEXANDER SNIDER, E.I.
CERTIFICATION NUMBER: 3064
ISSUED: DECEMBER 10, 2012

NAD 83/NSRS 2007 NC GRID

CLEARING AND GRUBBING
EROSION CONTROL FOR
CONSTRUCTION SHEET 4

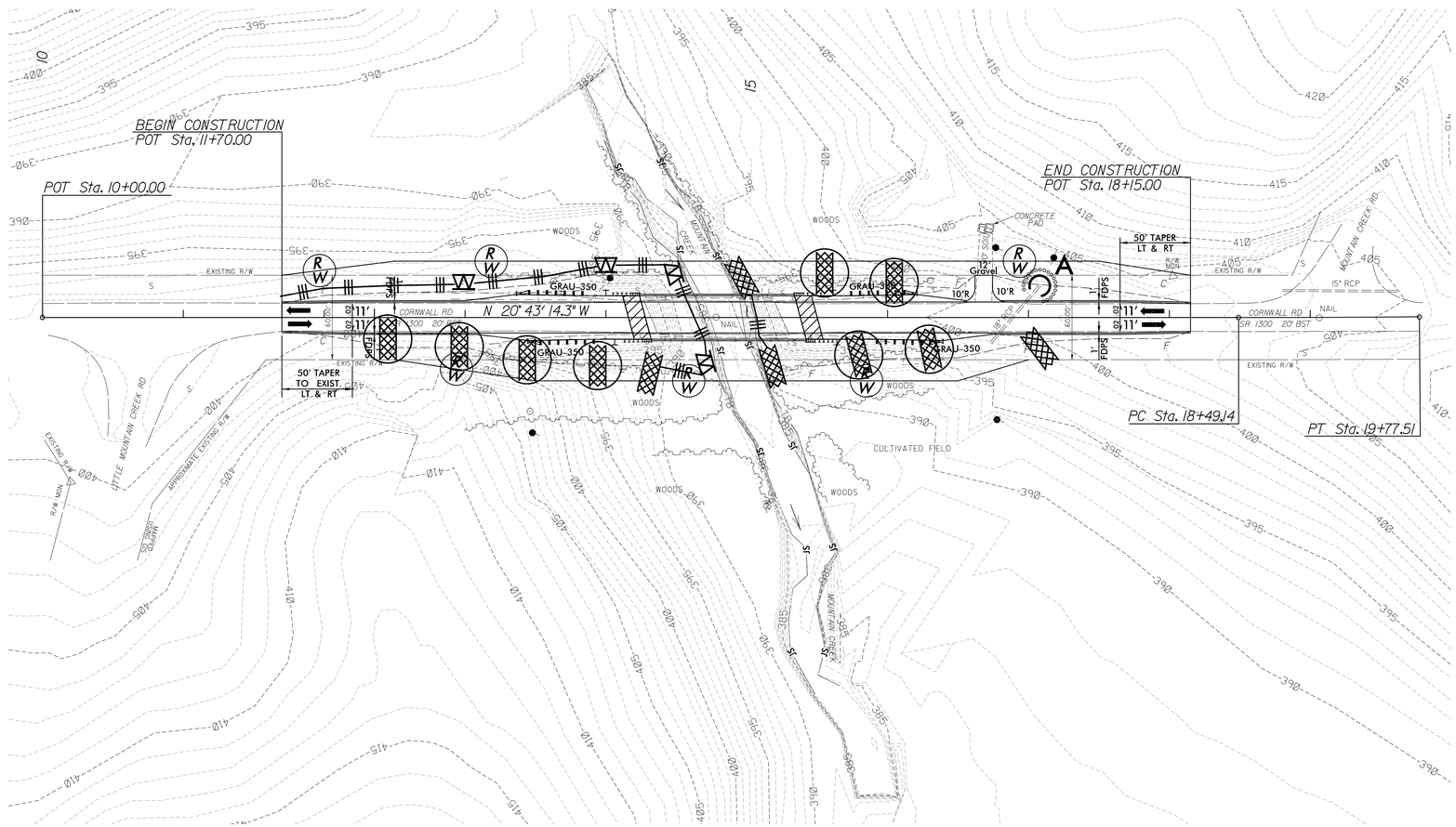

EROSION AND SEDIMENT CONTROL MEASURES

Std. #	Description	Symbol
1605.01	Temporary Silt Fence	
1606.01	Special Sediment Control Fence	
1633.01	Temporary Rock Silt Check Type-A	
	Temporary Rock Silt Check Type-A with Matting and Polyacrylamide (PAM)	
1635.01	Rock Pipe Inlet Sediment Trap Type-A	

THESE EROSION AND SEDIMENT CONTROL PLANS COMPLY WITH THE REGULATIONS SET FORTH BY THE NCG-010000 GENERAL CONSTRUCTION PERMIT EFFECTIVE AUGUST 3, 2011 ISSUED BY THE NORTH CAROLINA DEPARTMENT OF ENVIRONMENT AND NATURAL RESOURCES DIVISION OF WATER QUALITY.

Prepared in the Office of:

FLORENCE & HUTCHESON

5121 KINGDOM WAY, SUITE 100
RALEIGH NC 27607
NC License No: F-0258

2012 STANDARD SPECIFICATIONS

Roadway Standard Drawings

The following roadway english standards as appear in "Roadway Standard Drawings"– Roadway Design Unit – N. C. Department of Transportation – Raleigh, N. C., dated January 2012 and the latest revison thereto are applicable to this project and by reference hereby are considered a part of these plans.

1604.01	Railroad Erosion Control Detail	1632.01	Rock Inlet Sediment Trap Type A
1605.01	Temporary Silt Fence	1632.02	Rock Inlet Sediment Trap Type B
1606.01	Special Sediment Control Fence	1632.03	Rock Inlet Sediment Trap Type C
1607.01	Gravel Construction Entrance	1633.01	Temporary Rock Silt Check Type A
1622.01	Temporary Berms and Slope Drains	1633.02	Temporary Rock Silt Check Type B
1630.01	Riser Basin	1634.01	Temporary Rock Sediment Dam Type A
1630.02	Silt Basin Type B	1634.02	Temporary Rock Sediment Dam Type B
1630.03	Temporary Silt Ditch	1635.01	Rock Pipe Inlet Sediment Trap Type A
1630.04	Stilling Basin	1635.02	Rock Pipe Inlet Sediment Trap Type B
1630.05	Temporary Diversion	1640.01	Coir Fiber Baffle
1630.06	Special Stilling Basin	1645.01	Temporary Stream Crossing
1631.01	Matting Installation		

ALEXANDER SNIDER, E.I.
ROADSIDE ENVIRONMENTAL ENGINEER

3064
LEVEL III CERTIFICATION NUMBER

TRENTON J. CORMIER, P.E.
ROADSIDE ENVIRONMENTAL PROJECT ENGINEER

118
LEVEL III CERTIFICATION NUMBER

NOTE:
ALL EROSION CONTROL DEVICES SHOWN ARE LOCATED WITHIN EXISTING R/W OR EASEMENT.

Florence & Hutcheson
CONSULTING ENGINEERS
5121 Kingdom Way, Suite 100 Raleigh, NC 27607
NC License No: F-0258

12/10/2012
R:\Hydraulics\Erosion Control\cadd\bd5105P_hyd_erosion_c&g.dgn
Ko & Associates P.C.

GRAPHIC SCALE
50 0 50 100

PROJECT REFERENCE NO.	SHEET NO.
BD-5105P	EC-2/CONST.4
R/W SHEET NO.	___
ROADSIDE ENVIRONMENTAL PROJECT ENGINEER	

LEVEL III CERTIFIED BY:
ALEXANDER SNIDER, E.I.
CERTIFICATION NUMBER: 3064
ISSUED: DECEMBER 10, 2012

NAD 83/NSRS 2007
NC GRID

FINAL EROSION CONTROL FOR CONSTRUCTION SHEET 4

DETAIL A
TOE PROTECTION
(Not to Scale)

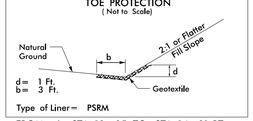

Type of Liner= PSRM
FROM -L- STA. 12+85 TO STA. 14+21 RT.

DETAIL B
BANK STABILIZATION
(Not to Scale)

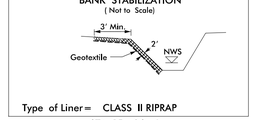

Type of Liner= CLASS II RIPRAP
STA. 15+06 -L-

DETAIL C
BANK STABILIZATION
(Not to Scale)

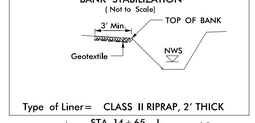

Type of Liner= CLASS II RIPRAP, 2' THICK
STA. 14+65 -L-

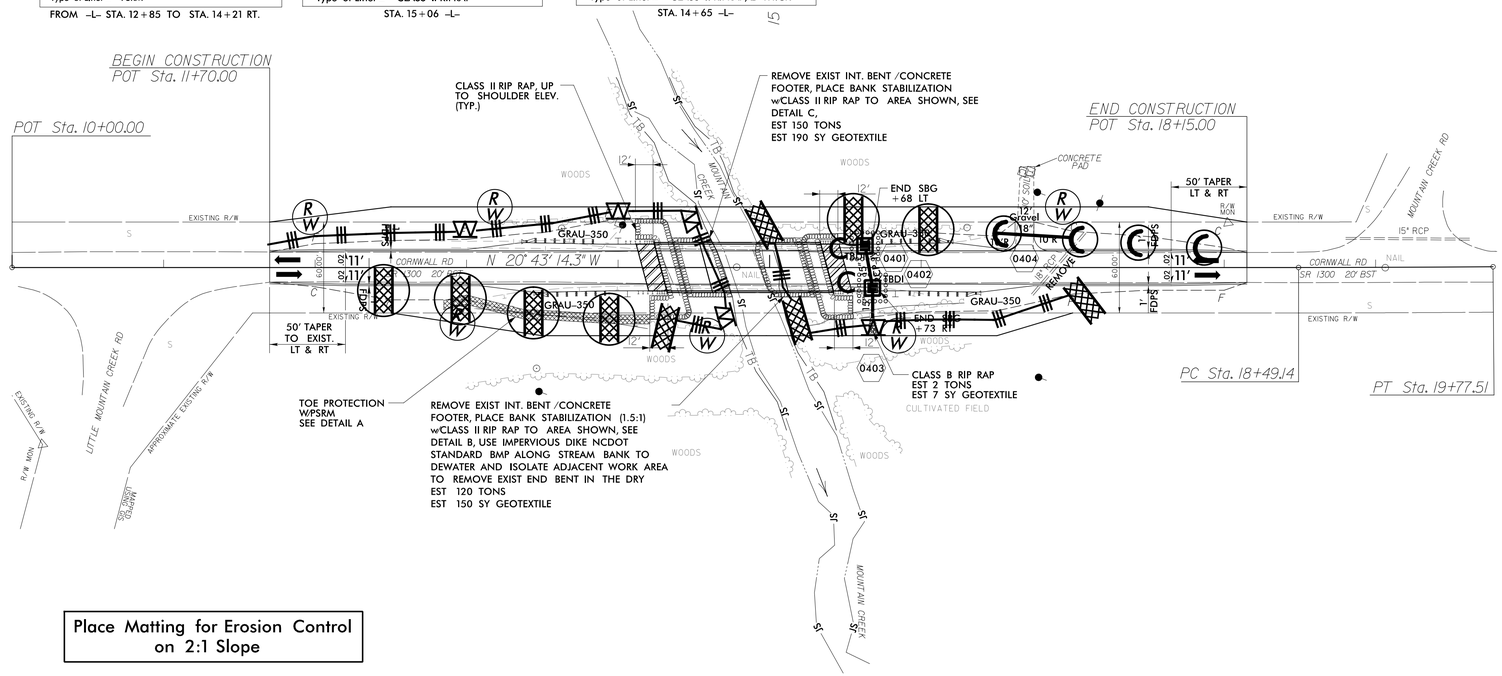

Place Matting for Erosion Control on 2:1 Slope

Contractor will install impervious dike to dewater both streambanks to allow for removal of existing concrete footers in the dry
Use "NCDOT Best Management Practices for Construction and Maintenance Activities" manual for isolation and dewatering operations

NOTE: IMPERVIOUS DIKE SHALL BE CONSIDERED INCIDENTAL TO THE REMOVAL OF THE EXISTING STRUCTURE.

EROSION AND SEDIMENT CONTROL MEASURES

Std. #	Description	Symbol
1605.01	Temporary Silt Fence	
1606.01	Special Sediment Control Fence	
1632.03	Rock Inlet Sediment Trap: Type C	
1633.01	Temporary Rock Silt Check Type-A	
	Temporary Rock Silt Check Type-A with Matting and Polyacrylamide (PAM)	
1633.02	Wattle/ Coir Fiber Wattle with Polyacrylamide (PAM)	

THESE EROSION AND SEDIMENT CONTROL PLANS COMPLY WITH THE REGULATIONS SET FORTH BY THE NCG-010000 GENERAL CONSTRUCTION PERMIT EFFECTIVE AUGUST 3, 2011 ISSUED BY THE NORTH CAROLINA DEPARTMENT OF ENVIRONMENT AND NATURAL RESOURCES DIVISION OF WATER QUALITY.

Prepared in the Office of:

FLORENCE & HUTCHESON
5121 KINGDOM WAY, SUITE 100
RALEIGH NC 27607
NC License No: F-0258

2012 STANDARD SPECIFICATIONS

Roadway Standard Drawings

The following roadway english standards as appear in "Roadway Standard Drawings"– Roadway Design Unit – N. C. Department of Transportation – Raleigh, N. C., dated January 2012 and the latest revison thereto are applicable to this project and by reference hereby are considered a part of these plans.

1604.01	Railroad Erosion Control Detail	1632.01	Rock Inlet Sediment Trap Type A
1605.01	Temporary Silt Fence	1632.02	Rock Inlet Sediment Trap Type B
1606.01	Special Sediment Control Fence	1632.03	Rock Inlet Sediment Trap Type C
1607.01	Gravel Construction Entrance	1633.01	Temporary Rock Silt Check Type A
1622.01	Temporary Berms and Slope Drains	1633.02	Temporary Rock Silt Check Type B
1630.01	Riser Basin	1634.01	Temporary Rock Sediment Dam Type A
1630.02	Silt Basin Type B	1634.02	Temporary Rock Sediment Dam Type B
1630.03	Temporary Silt Ditch	1635.01	Rock Pipe Inlet Sediment Trap Type A
1630.04	Stilling Basin	1635.02	Rock Pipe Inlet Sediment Trap Type B
1630.05	Temporary Diversion	1640.01	Coir Fiber Baffle
1630.06	Special Stilling Basin	1645.01	Temporary Stream Crossing
1631.01	Matting Installation		

ALEXANDER SNIDER, E.I.
ROADSIDE ENVIRONMENTAL ENGINEER
3064
LEVEL III CERTIFICATION NUMBER
TRENTON J. CORMIER, P.E.
ROADSIDE ENVIRONMENTAL PROJECT ENGINEER
118
LEVEL III CERTIFICATION NUMBER

NOTE:
ALL EROSION CONTROL DEVICES SHOWN ARE LOCATED WITHIN EXISTING R/W OR EASEMENT.

Florence & Hutcheson
CONSULTING ENGINEERS
5121 Kingdom Way, Suite 100 Raleigh, NC 27607
NC License No: F-0258

12/14/2012
R:\Utilities\Erosion Control\cadd\bd5105P_hyd_erosion_final.dgn
Kc & Associates, PC

PROJECT REFERENCE NO.	SHEET NO.
BD-5105P	EC-3

DIVISION OF HIGHWAYS
STATE OF NORTH CAROLINA

SOIL STABILIZATION TIMEFRAMES

SITE DESCRIPTION	STABILIZATION TIME	TIMEFRAME EXCEPTIONS
PERIMETER DIKES, SWALES, DITCHES AND SLOPES	7 DAYS	NONE
HIGH QUALITY WATER (HQW) ZONES	7 DAYS	NONE
SLOPES STEEPER THAN 3:1	7 DAYS	IF SLOPES ARE 10' OR LESS IN LENGTH AND ARE NOT STEEPER THAN 2:1, 14 DAYS ARE ALLOWED.
SLOPES 3:1 OR FLATTER	14 DAYS	7 DAYS FOR SLOPES GREATER THAN 50' IN LENGTH.
ALL OTHER AREAS WITH SLOPES FLATTER THAN 4:1	14 DAYS	NONE, EXCEPT FOR PERIMETERS AND HQW ZONES.

PROJECT REFERENCE NO.	SHEET NO.
BD-5105P	EC-4

WATTLE WITH POLYACRYLAMIDE (PAM) DETAIL

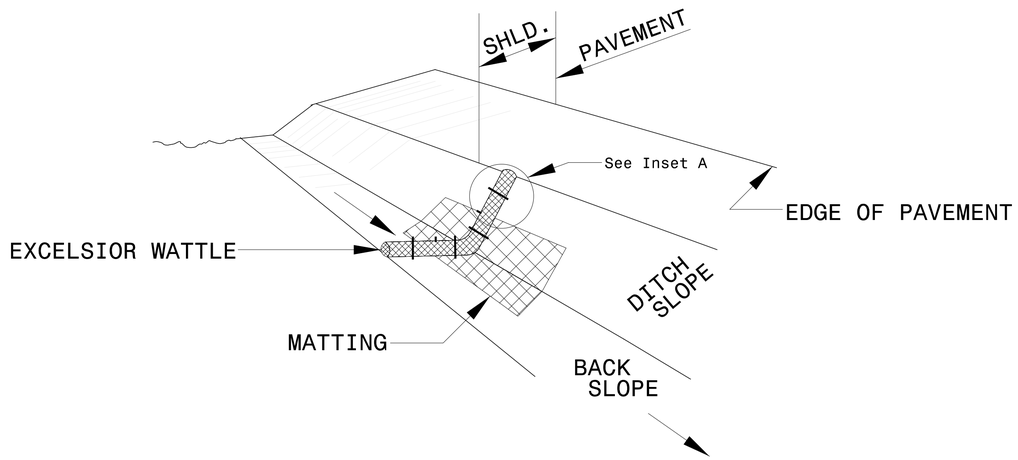

ISOMETRIC VIEW

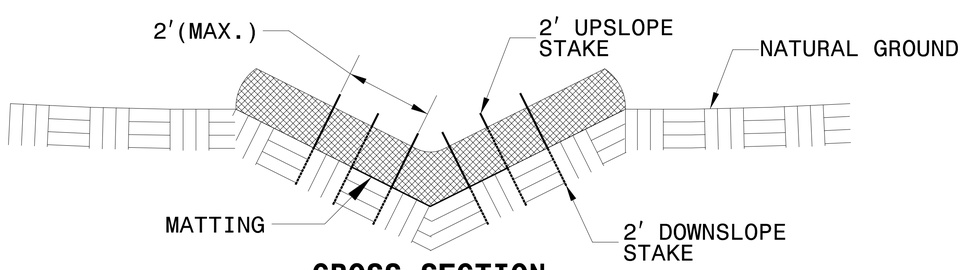

CROSS SECTION VEE DITCH

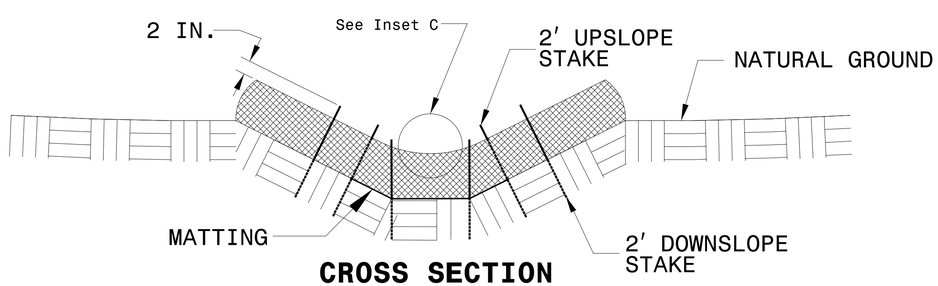

CROSS SECTION TRAPEZOIDAL DITCH

NOTES:

USE MINIMUM 12 IN. DIAMETER EXCELSIOR WATTLE.

USE 2 FT. WOODEN STAKES WITH A 2 IN. BY 2 IN. NOMINAL CROSS SECTION.

ONLY INSTALL WATTLE(S) TO A HEIGHT IN DITCH SO FLOW WILL NOT WASH AROUND WATTLE AND SCOUR DITCH SLOPES AND AS DIRECTED.

INSTALL A MINIMUM OF 2 UPSLOPE STAKES AND 4 DOWNSLOPE STAKES AT AN ANGLE TO WEDGE WATTLE TO BOTTOM OF DITCH.

PROVIDE STAPLES MADE OF 0.125 IN. DIAMETER STEEL WIRE FORMED INTO A U SHAPE NOT LESS THAN 12" IN LENGTH.

INSTALL STAPLES APPROXIMATELY EVERY 1 LINEAR FOOT ON BOTH SIDES OF WATTLE AND AT EACH END TO SECURE IT TO THE SOIL.

INSTALL MATTING IN ACCORDANCE WITH SECTION 1631 OF THE STANDARD SPECIFICATIONS.

PRIOR TO POLYACRYLAMIDE (PAM) APPLICATION, OBTAIN A SOIL SAMPLE FROM PROJECT LOCATION, AND FROM OFFSITE MATERIAL, AND ANALYZE FOR APPROPRIATE PAM FLOCCULANT TO BE APPLIED TO EACH WATTLE.

INITIALLY APPLY 2 OUNCES OF ANIONIC OR NEUTRALLY CHARGED PAM OVER WATTLE WHERE WATER WILL FLOW AND 1 OUNCE OF PAM ON MATTING ON EACH SIDE OF WATTLE. REAPPLY PAM AFTER EVERY RAINFALL EVENT THAT IS EQUAL TO OR EXCEEDS 0.50 IN.

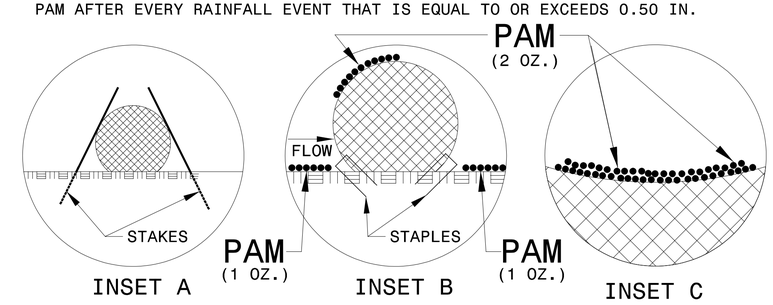

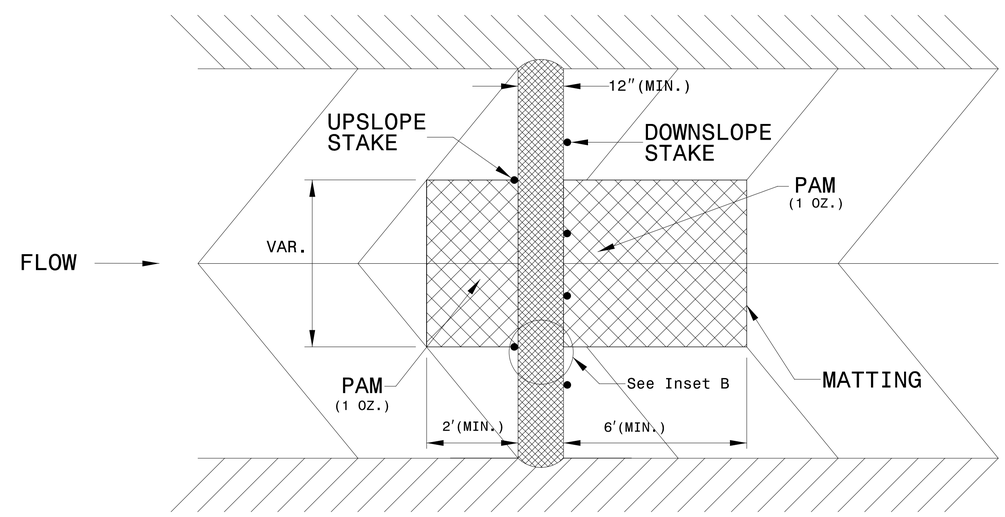

TOP VIEW

PROJECT REFERENCE NO.	SHEET NO.
BD-5105P	EC-5

TEMPORARY ROCK SILT CHECK TYPE 'A' WITH EXCELSIOR MATTING AND POLYACRYLAMIDE (PAM)

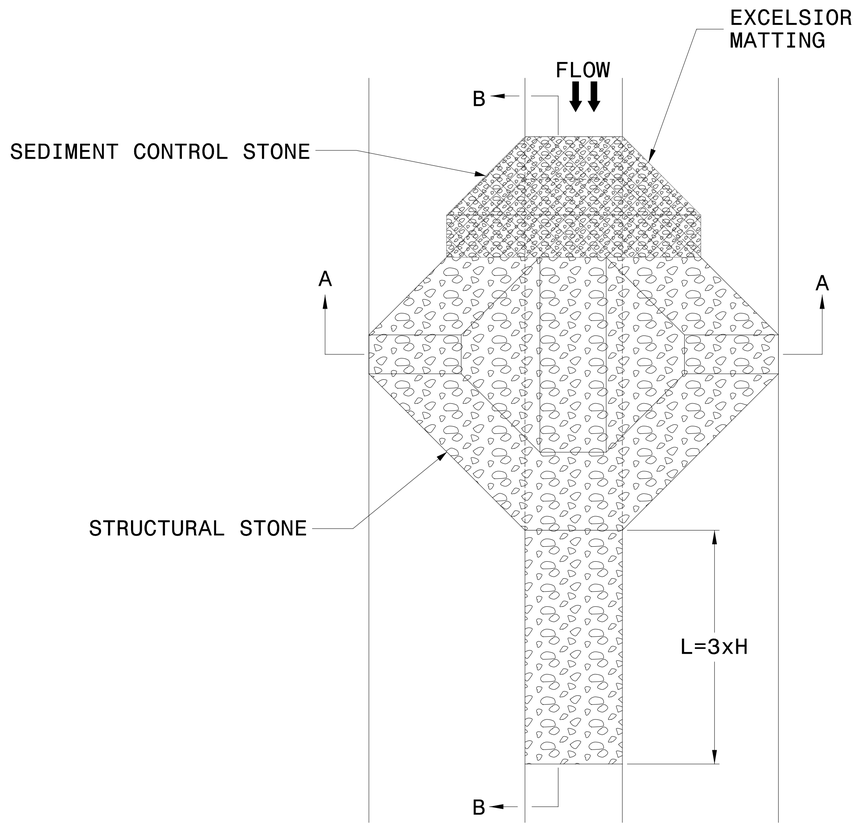

PLAN

NOTES

USE EXCELSIOR FOR MATTING MATERIAL AND ANCHOR MATTING SECTION AT TOP AND BOTTOM WITH CLASS B STONE.

PRIOR TO POLYACRYLAMIDE (PAM) APPLICATION, OBTAIN A SOIL SAMPLE FROM PROJECT LOCATION, AND FROM OFFSITE MATERIAL, AND ANALYZE FOR APPROPRIATE PAM FLOCCULANT TO BE APPLIED TO EACH ROCK SILT CHECK.

INITIALLY APPLY 3.5 OUNCES OF POLYACRYLAMIDE (PAM) TO TOP OF MATTING SECTION AND AFTER EVERY RAINFALL EVENT THAT EQUALS OR EXCEEDS 0.50 INCHES.

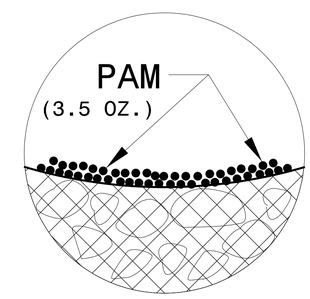

INSET A

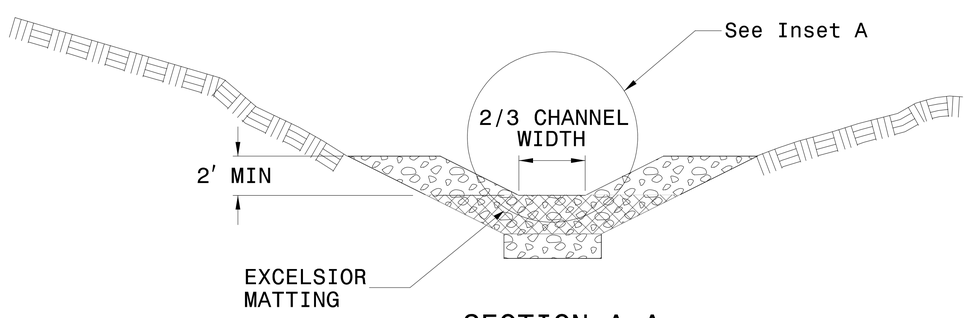

SECTION A-A

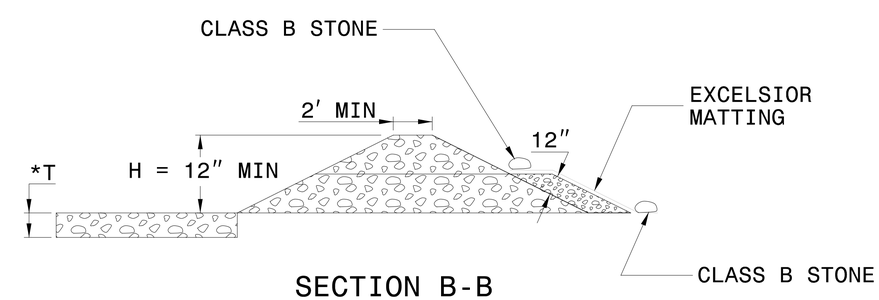

SECTION B-B

*T = 12" MIN., 18" MAX.

NOT TO SCALE

PROJECT REFERENCE NO.	SHEET NO.
BD-5105P	EC-6

DIVISION OF HIGHWAYS
STATE OF NORTH CAROLINA

SOIL STABILIZATION SUMMARY SHEET

MATTING FOR EROSION CONTROL

CONST SHEET NO.	LINE	FROM STATION	TO STATION	SIDE	ESTIMATE (SY)
4	-L-	12+25	12+75	RT	70
4	-L-	17+00	17+50	LT	35
				SUBTOTAL	105
MISCELLANEOUS MATTING TO BE INSTALLED AS DIRECTED BY THE ENGINEER					0
				TOTAL	105
				SAY	105

PERMANENT SOIL REINFORCEMENT MAT

CONST SHEET NO.	LINE	FROM STATION	TO STATION	SIDE	ESTIMATE (SY)
				SUBTOTAL	0
		ADDITIONAL PSRM TO BE INSTALLED			0
				TOTAL	0
				SAY	0

8/23/99

0 5 10	PROJ. REFERENCE NO.	SHEET NO.
	BD-5105P	X-1

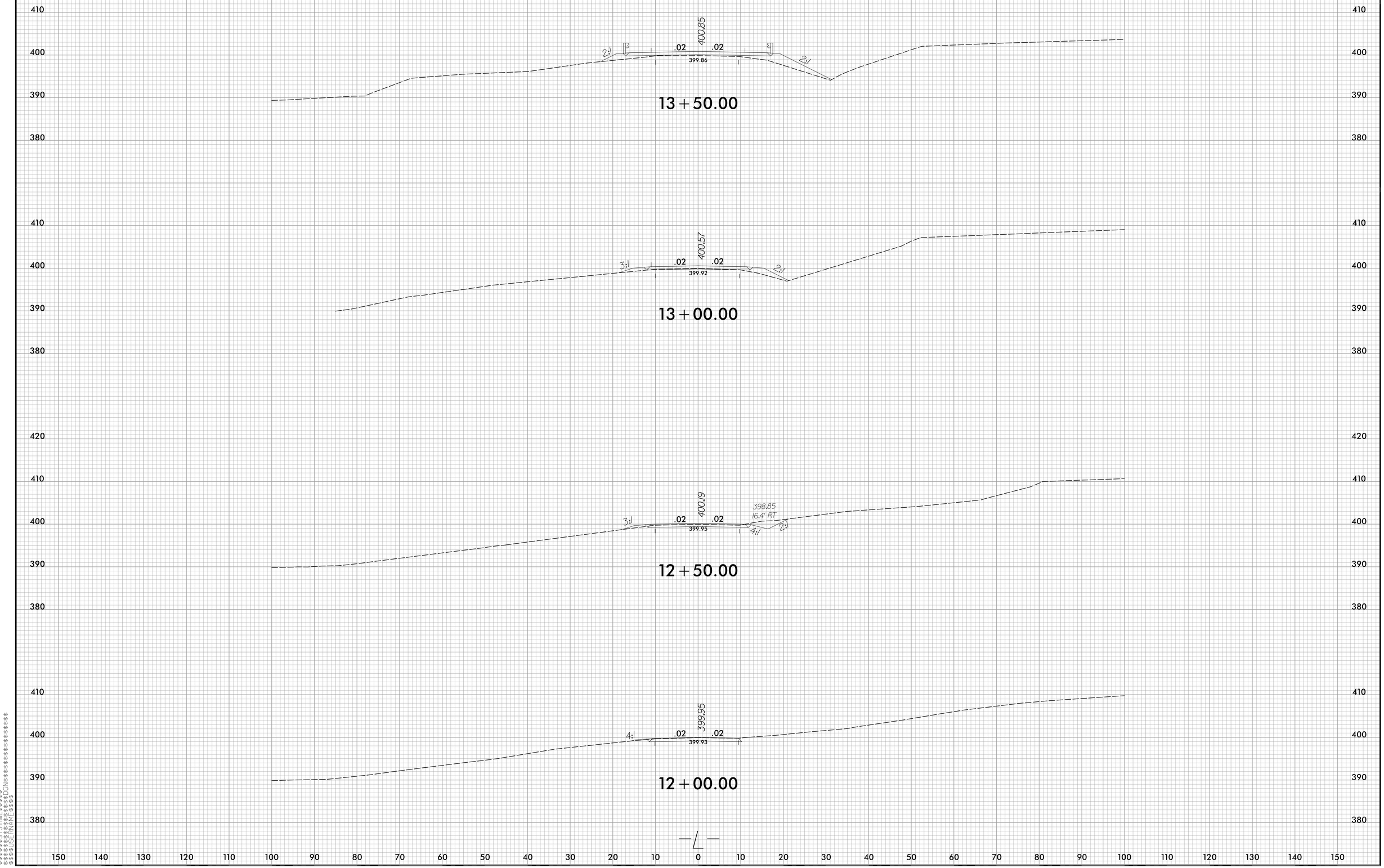

$$$$$SYSTIME$$$$
$$$$$$$$$$DGN$$$$$$$$$$$$$$$$$$
$$$$USERNAME$$$$

0 5 10	PROJ. REFERENCE NO.	SHEET NO.
	BD-5105P	X-2

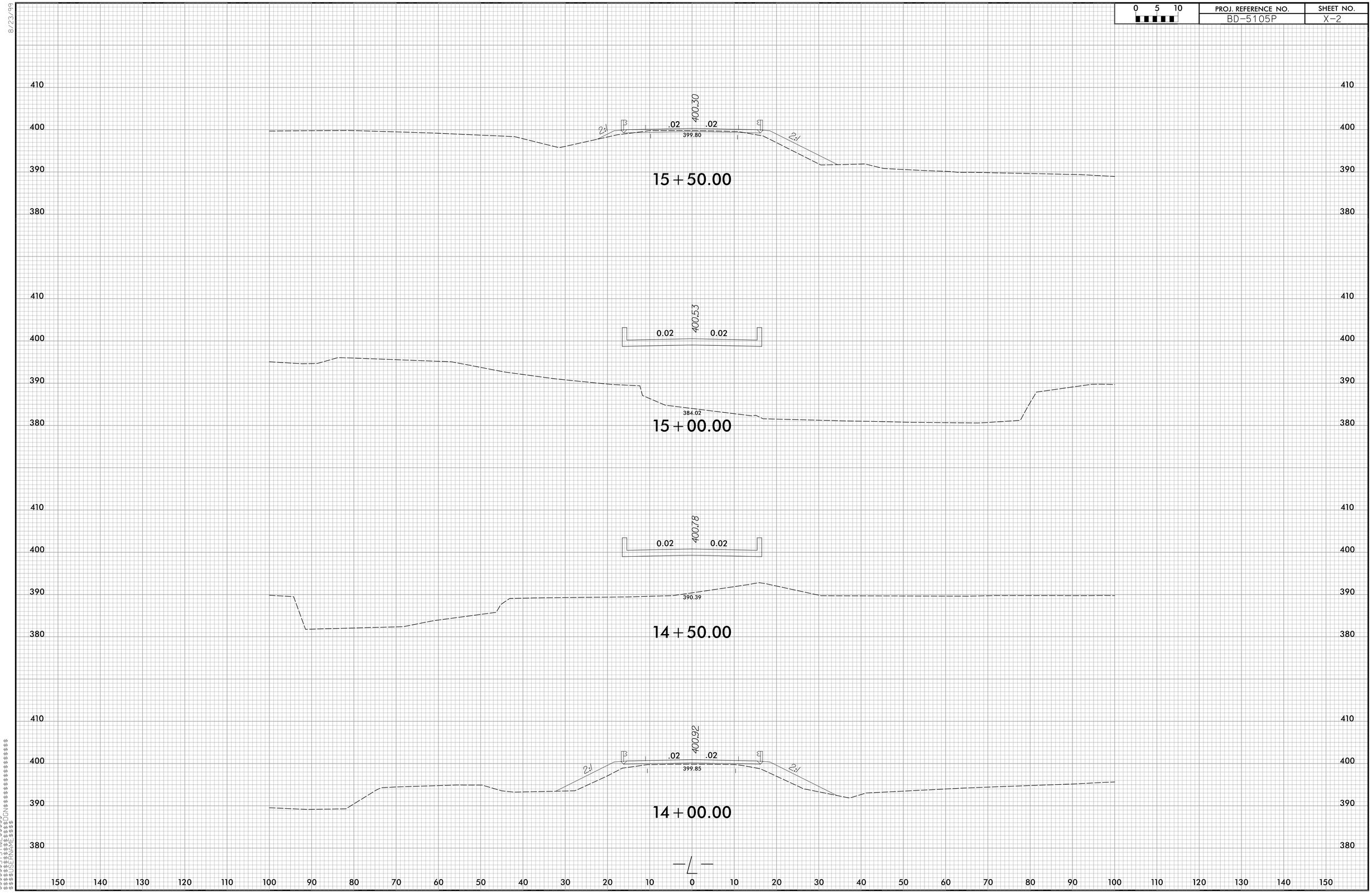

8/23/99

$$$$SYSTIME$$$$
$$$$DGNFILE$$$$
$$$$USERNAME$$$$

8/23/99

0 5 10	PROJ. REFERENCE NO.	SHEET NO.
	BD-5105P	X-3

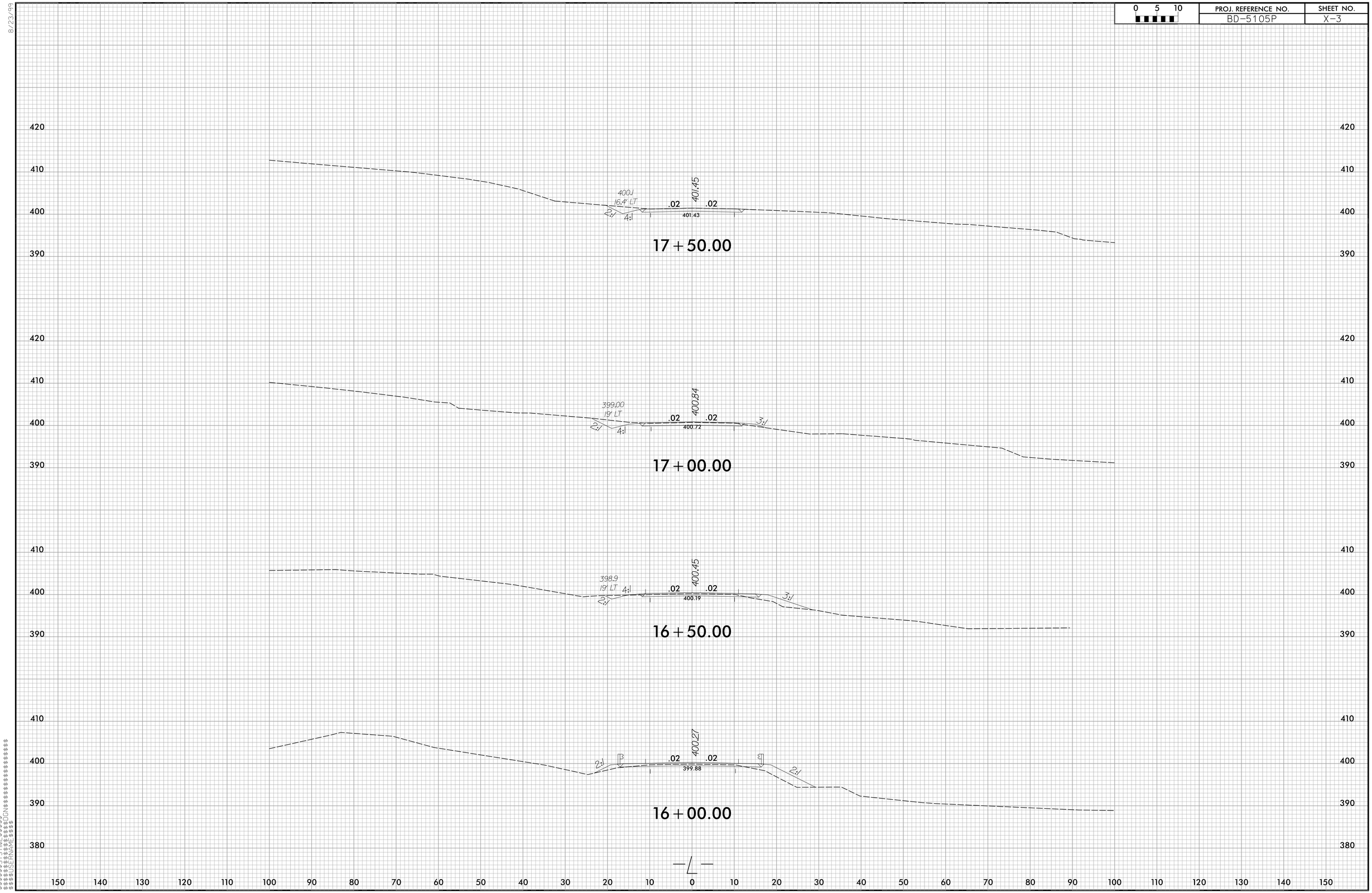

$$$$SYSTIME$$$$
$$$$SHEET$$$$DGN$$$$$$$$$$$$$$$$$$$$
$$$$USERNAME$$$$

8/23/99

0 5 10	PROJ. REFERENCE NO.	SHEET NO.
	BD-5105P	X-4

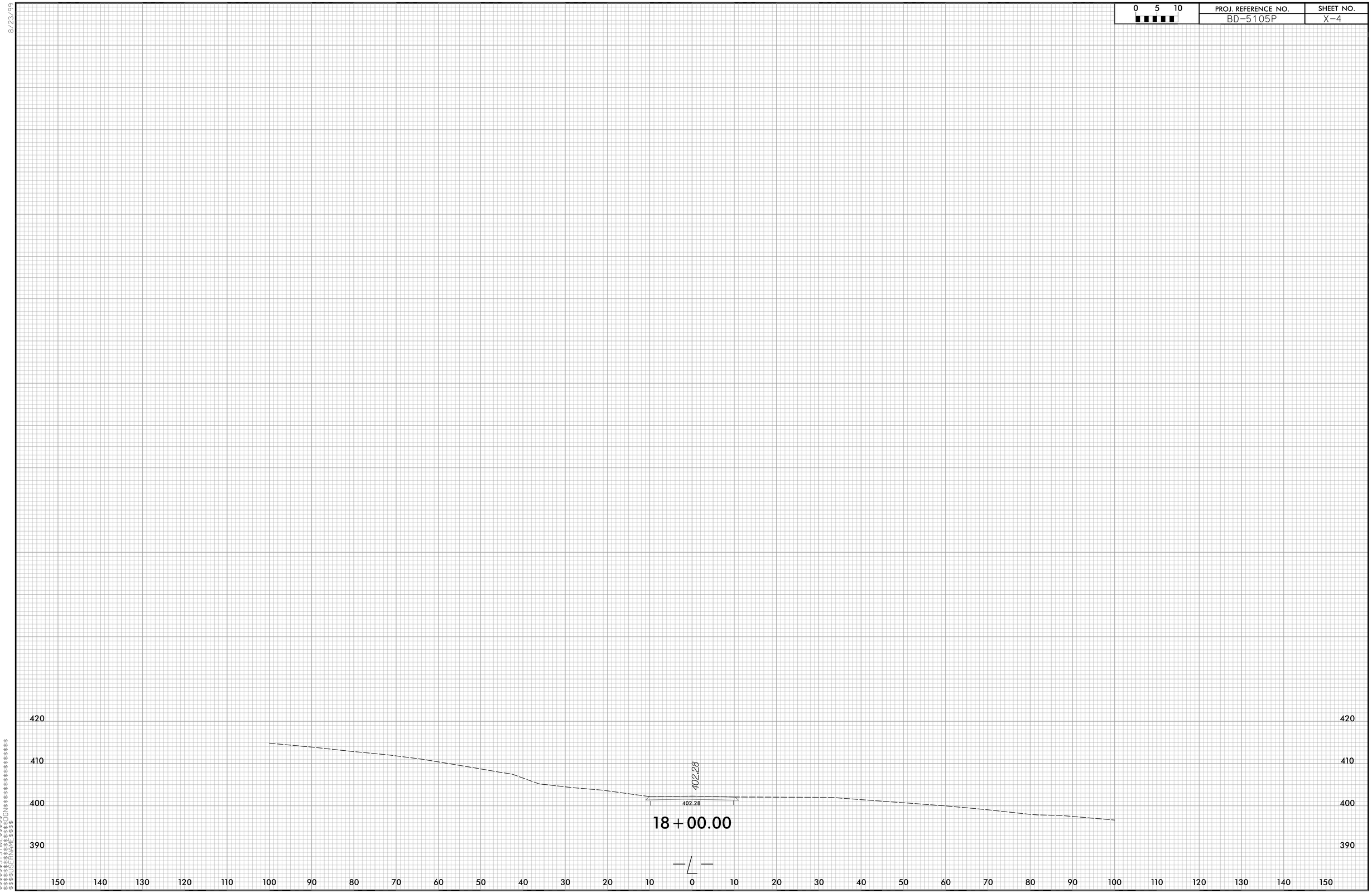

$$$$SYSTIME$$$$
$$$$SYSDATE$$$$
$$$$DWG$$$$
$$$$USERNAME$$$$

F. A. PROJECT No. BRZ - 1300 (12)

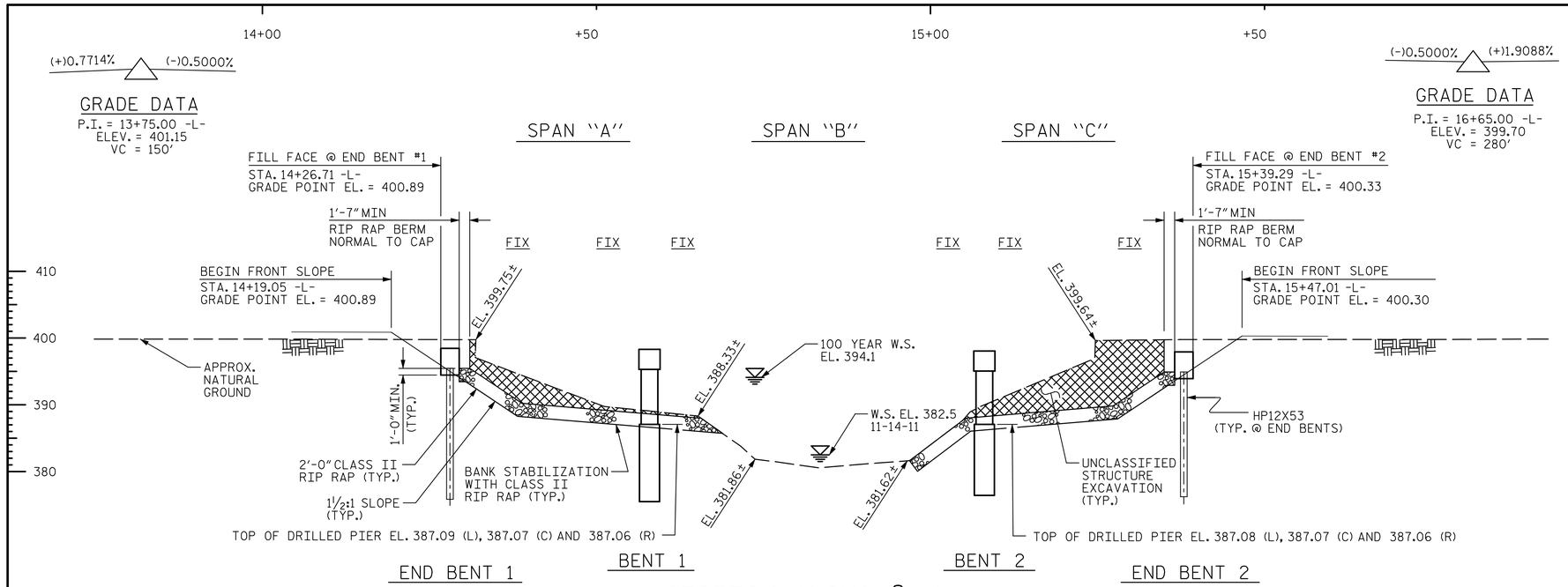

SECTION ALONG ℄ -L-

(BENTS ON SECTION AT RIGHT ANGLES TO BENTS)

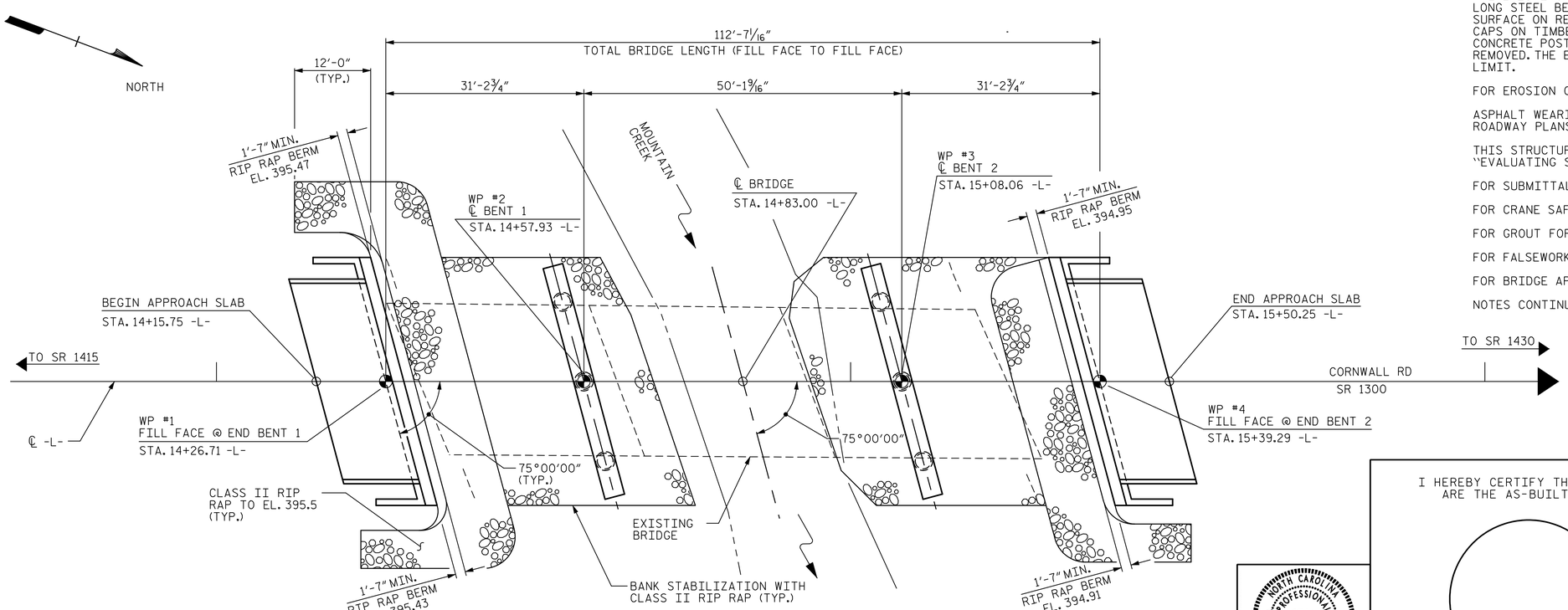

PLAN

PILES NOT SHOWN FOR CLARITY

NOTES

ASSUMED LIVE LOAD = HL-93 OR ALTERNATE LOADING.

THIS BRIDGE HAS BEEN DESIGNED IN ACCORDANCE WITH THE REQUIREMENTS OF THE AASHTO LRFD BRIDGE DESIGN SPECIFICATIONS.

FOR OTHER DESIGN DATA AND GENERAL NOTES, SEE SHEET SN.

INASMUCH AS THE PAINT SYSTEM ON THE EXISTING STRUCTURAL STEEL CONTAINS LEAD, THE CONTRACTOR'S ATTENTION IS DIRECTED TO ARTICLE 107-1 OF THE STANDARD SPECIFICATIONS. ANY COST RESULTING FROM COMPLIANCE WITH APPLICABLE STATE OR FEDERAL REGULATIONS PERTAINING TO HANDLING OF MATERIALS CONTAINING LEAD BASED PAINT SHALL BE INCLUDED IN THE BID PRICE FOR "REMOVAL OF EXISTING STRUCTURE".

THE CONTRACTOR SHALL PROVIDE INDEPENDENT ASSURANCE SAMPLES OF REINFORCING STEEL AS FOLLOWS: FOR PROJECTS REQUIRING UP TO 400 TONS OF REINFORCING STEEL, ONE 30 INCH SAMPLE OF EACH SIZE BAR USED, AND FOR PROJECTS REQUIRING OVER 400 TONS OF REINFORCING STEEL, TWO 30 INCH SAMPLES OF EACH SIZE BAR USED. THE BARS FROM WHICH THE SAMPLES ARE TAKEN MUST THEN BE SPLICED WITH REPLACEMENT BARS OF THE SIZE AND PAYMENT FOR THE SAMPLES OF REINFORCING STEEL SHALL BE CONSIDERED INCIDENTAL TO VARIOUS PAY ITEMS.

THE MATERIAL IN THE CROSS HATCHED AREA SHALL BE EXCAVATED FOR A DISTANCE OF 30 FEET EACH SIDE OF CENTERLINE ROADWAY AS DIRECTED BY THE ENGINEER. THIS WORK WILL BE PAID FOR AS "UNCLASSIFIED STRUCTURE EXCAVATION", LUMP SUM. SEE SECTION 412 OF THE STANDARD SPECIFICATIONS.

BOTTOM OF EXCAVATION IS AT APPROXIMATE ELEVATION 388.0 AND 388.1 AT END BENT 1 AND END BENT 2, RESPECTIVELY.

THE SUBSTRUCTURE OF THE EXISTING BRIDGE INDICATED ON THE PLANS IS FROM THE BEST INFORMATION AVAILABLE. SINCE THIS INFORMATION IS SHOWN FOR THE CONVENIENCE OF THE CONTRACTOR, THE CONTRACTOR SHALL HAVE NO CLAIM WHATSOEVER AGAINST THE NORTH CAROLINA DEPARTMENT OF TRANSPORTATION FOR ANY DELAYS OR ADDITIONAL COST INCURRED BASED ON DIFFERENCES BETWEEN THE EXISTING BRIDGE SUBSTRUCTURE SHOWN ON THE PLANS AND THE ACTUAL CONDITIONS AT THE PROJECT SITE.

REMOVAL OF THE EXISTING BRIDGE SHALL BE PERFORMED SO AS NOT TO ALLOW DEBRIS TO FALL INTO THE WATER. THE CONTRACTOR SHALL REMOVE THE BRIDGE AND SUBMIT PLANS FOR DEMOLITION IN ACCORDANCE WITH ARTICLE 402-2 OF THE STANDARD SPECIFICATIONS.

THE EXISTING STRUCTURE CONSISTING OF THREE 30.3, 30.0 AND 30.3 FOOT LONG STEEL BEAM SPANS; 24.0' CLEAR ROADWAY; 5 INCH ASPHALT WEARING SURFACE ON REINFORCED CONCRETE DECK ON REINFORCED CONCRETE END BENT CAPS ON TIMBER PILES AND REINFORCED CONCRETE BENT CAPS ON REINFORCED CONCRETE POSTS AND BEAMS LOCATED ON THE PROPOSED ALIGNMENT SHALL BE REMOVED. THE EXISTING BRIDGE IS PRESENTLY POSTED BELOW THE LEGAL LOAD LIMIT.

FOR EROSION CONTROL MEASURES, SEE EROSION CONTROL PLANS.

ASPHALT WEARING SURFACE IS INCLUDED IN ROADWAY QUANTITY ON ROADWAY PLANS.

THIS STRUCTURE HAS BEEN DESIGNED IN ACCORDANCE WITH HEC 18, "EVALUATING SCOUR AT BRIDGES", MAY, 2001.

FOR SUBMITTAL OF WORKING DRAWINGS, SEE SPECIAL PROVISIONS.

FOR CRANE SAFETY, SEE SPECIAL PROVISIONS.

FOR GROUT FOR STRUCTURES, SEE SPECIAL PROVISIONS.

FOR FALSEWORK AND FORMWORK, SEE SPECIAL PROVISIONS.

FOR BRIDGE APPROACH FILLS, SEE SPECIAL PROVISIONS.

NOTES CONTINUED ON SHEET S-2.

PROJECT NO. BD-5105P (45351.1.16)

GRANVILLE COUNTY

STATION: 14+83.00 -L-

SHEET 1 OF 2 REPLACES BRIDGE NO. 136

I HEREBY CERTIFY THESE PLANS ARE THE AS-BUILT PLANS

STATE OF NORTH CAROLINA
DEPARTMENT OF TRANSPORTATION
RALEIGH

GENERAL DRAWING
BRIDGE ON SR 1300
OVER MOUNTAIN CREEK

REVISIONS						SHEET NO.
NO.	BY:	DATE:	NO.	BY:	DATE:	S-1
1			3			TOTAL SHEETS
2			4			19

Florence & Hutcheson
An ICA Company
5121 Kingdom Way, Suite 100 Raleigh, NC 27607
NC License No: P-0258

NORTH CAROLINA PROFESSIONAL SEAL 20532 ENGINEER JAMES E. MONDOLFI
9-4-12

DRAWN BY : D.H. CARTER DATE : SEP 2012
CHECKED BY : J. E. MONDOLFI DATE : SEP 2012

12/10/2012
p:\libraprojects\dlv05\bd-5105p\structures\plans\BD_5105P_GD.dgn
Florence & Hutcheson - An ICA Company

BENCH MARK: BM #1, RR SPIKE IN 24" SWEET GUM, -L- STA. 12+90.62, 66.33' LT

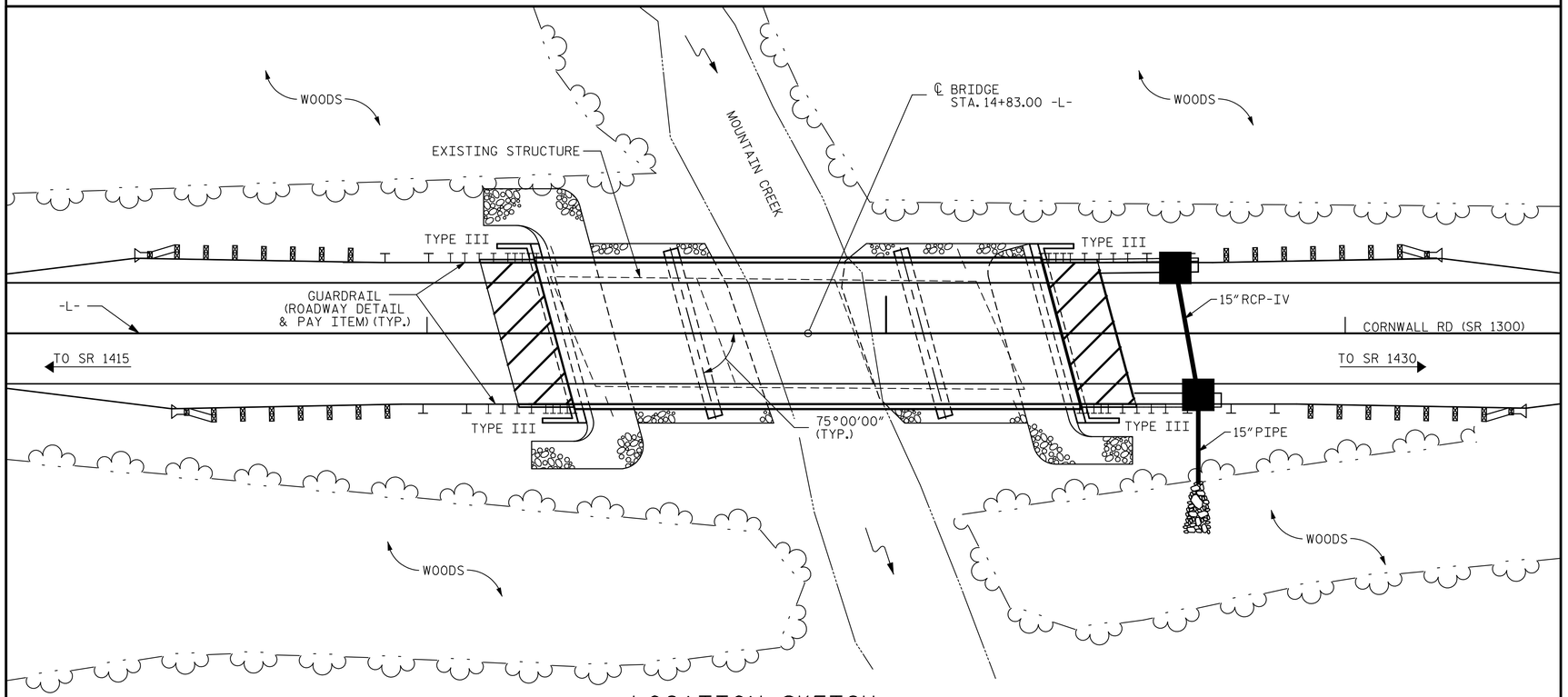

LOCATION SKETCH

FOR UTILITY INFORMATION,
SEE UTILITY PLANS AND
SPECIAL PROVISIONS

NOTES

FOUNDATION RECOMENDATIONS:

FOR PILES, SEE SECTION 450 OF THE STANDARD SPECIFICATIONS.

PILES AT END BENT NO. 1 AND END BENT NO. 2 ARE DESIGNED FOR A FACTORED RESISTANCE OF 51 TONS PER PILE.

DRIVE PILES AT END BENT NO. 1 AND END BENT NO. 2 TO A REQUIRED DRIVING RESISTANCE OF 85 TONS PER PILE.

STEEL H-PILE POINTS ARE REQUIRED FOR STEEL H-PILES AT END BENT NO.1 AND END BENT NO. 2. FOR STEEL PILE POINTS, SEE SECTION 450 OF THE STANDARD SPECIFICATIONS.

FOR DRILLED PIERS, SEE SECTION 411 OF THE STANDARD SPECIFICATIONS.

DRILLED PIERS AT BENT NO. 1 ARE DESIGNED FOR A FACTORED RESISTANCE OF 275 TONS PER PIER. CHECK FIELD CONDITIONS FOR THE REQUIRED TIP RESISTANCE OF 40 TSF.

DRILLED PIERS AT BENT NO. 2 ARE DESIGNED FOR A FACTORED RESISTANCE OF 275 TONS PER PIER. CHECK FIELD CONDITIONS FOR THE REQUIRED TIP RESISTANCE OF 80 TSF.

PERMANENT STEEL CASINGS MAY BE REQUIRED FOR DRILLED PIERS AT BENT NO. 1 AND BENT NO. 2 IF REQUIRED, DO NOT EXTEND PERMANENT CASINGS BELOW ELEVATION 380 FT WITHOUT PRIOR APPROVAL FROM THE ENGINEER. THE ENGINEER WILL DETERMINE THE NEED FOR PERMANENT CASINGS.

INSTALL DRILLED PIERS AT BENT NO. 1 THAT EXTEND TO AN ELEVATION NO HIGHER THAN 371 FEET AND SATISFY THE REQUIRED TIP RESISTANCE.

INSTALL DRILLED PIERS AT BENT NO. 2 THAT EXTEND TO AN ELEVATION NO HIGHER THAN 371 FEET AND SATISFY THE REQUIRED TIP RESISTANCE.

THE SCOUR CRITICAL ELEVATION FOR BENT NO. 1 AND BENT NO. 2 IS ELEVATION 381 FEET. SCOUR CRITICAL ELEVATIONS ARE USED TO MONITOR POSSIBLE SCOUR PROBLEMS DURING THE LIFE OF THE STRUCTURE.

SPT MAY BE REQUIRED FOR DRILLED PIERS. THE ENGINEER WILL DETERMINE THE NEED FOR SPT. FOR SPT TESTING, SEE SECTION 411 OF THE STANDARD SPECIFICATIONS.

CSL TUBES AND TESTING ARE REQUIRED FOR DRILLED PIERS AT BENT NO. 1 AND BENT NO.2. FOR SPT TESTING, SEE SECTION 411 OF THE STANDARD SPECIFICATIONS.

SID INSPECTIONS MAY BE REQUIRED FOR DIRLLED PIERS. THE ENGINEER WILL DETERMINE THE NEED FOR SID INSPECTIONS. FOR SID INSPECTIONS, SEE SECTION 411 OF THE STANDARD SPECIFICATIONS.

THE CONTRACT UNIT PRICE FOR 36" DIAMETER DRILLED PIERS WILL BE FULL COMPENSATION FOR DRILLING THROUGH ANY MATERIALS ENCOUNTERED.

HYDRAULIC DATA

DESIGN DISCHARGE	= 2100 CFS
FREQUENCY OF DESIGN FLOOD	= 25 yrs.
DESIGN HIGH WATER ELEVATION	= 392.3
DRAINAGE AREA	= 9.1 SQ MI
BASIC DISCHARGE (Q100)	= 3001 CFS
BASIC HIGH WATER ELEVATION	= 394.1

OVERTOPPING FLOOD DATA

OVERTOPPING DISCHARGE	= 7000± CFS
FREQUENCY OF OVERTOPPING FLOOD	= 500 yrs.+
OVERTOPPING FLOOD ELEVATION	= 400.9

TOTAL BILL OF MATERIAL

	REMOVAL OF EXISTING STRUCTURE AT STA. 14+83.00 -L-	3'-0" DIA DRILLED PIERS	PERMANENT STEEL CASING FOR 3'-0" DIA. DRILLED PIER	SID INSPECTION	CSL TESTING	SPT TESTING	BRIDGE APPROACH FILL SUBREGIONAL TIER AT STA. 14+83.00 -L-	UNCLASSIFIED STRUCTURE EXCAVATION AT STA. 14+83.00 -L-	CLASS A CONCRETE	BRIDGE APPROACH SLABS AT STA. 14+83.00 -L-	REINFORCING STEEL	SPIRAL COLUMN REINFORCING STEEL	HP 12 X 53 STEEL PILES		STEEL PILE POINTS	VERTICAL CONCRETE BARRIER RAIL	RIP RAP CLASS II	GEOTEXTILE FOR DRAINAGE	ELASTOMERIC BEARINGS	3'-0" X 1'-9" PRESTRESSED CONCRETE CORED SLABS	
	LUMP SUM	LIN. FT.	LIN. FT.	EA.	EA.	EA.	LUMP SUM	LUMP SUM	CU. YDS.	LUMP SUM	LBS.	LBS.	NO.	LIN. FT.	NO.	LIN. FT.	TONS	SQ. YDS.	LUMP SUM	NO.	LIN. FT.
SUPERSTRUCTURE																220.75				33	1,210
END BENT NO. 1									22.2		2,714		7	105	7		157	175			
BENT NO. 1		48.22	25			3			18.0		9,221	1,294									
BENT NO. 2		48.21	24			3			17.9		9,183	1,279									
END BENT NO. 2									22.2		2,714		7	175	7		116	130			
TOTAL	LUMP SUM	96.43	49	1	1	6	LUMP SUM	LUMP SUM	80.3	LUMP SUM	23,832	2,573	14	280	14	220.75	273	305	LUMP SUM	33	1,210

PROJECT NO. BD-5105P (45351.1.16)

GRANVILLE COUNTY

STATION: 14+83.00 -L-

SHEET 2 OF 2

STATE OF NORTH CAROLINA
DEPARTMENT OF TRANSPORTATION
RALEIGH

GENERAL DRAWING

BRIDGE ON SR 1300
OVER MOUNTAIN CREEK

Florence & Hutcheson
An ICA Company
5121 Kingsborough Way, Suite 100 Raleigh, NC 27607
NC License No: F-0258

NORTH CAROLINA PROFESSIONAL SEAL 20532 ENGINEER J. E. MONDOLFI
9-4-12

REVISIONS								SHEET NO.
NO.	BY:	DATE:	NO.	BY:	DATE:			S-2
1			3					TOTAL SHEETS
2			4					19

DRAWN BY : D.H. CARTER DATE : SEP 2012
CHECKED BY : J. E. MONDOLFI DATE : SEP 2012

12/10/2012
p:\libr\projects\div05\bd-5105p\structures\plans\BD_5105P_LS_.dgn
Florence & Hutcheson - An ICA Company

LOAD AND RESISTANCE FACTOR RATING (LRFD) SUMMARY FOR PRESTRESSED CONCRETE GIRDERS

LEVEL		VEHICLE	WEIGHT (W) (TONS)	CONTROLLING LOAD RATING	MINIMUM RATING FACTORS (RF)	TONS = W X RF	STRENGTH I LIMIT STATE											SERVICE III LIMIT STATE						COMMENT NUMBER
							LIVELOAD FACTORS	MOMENT					SHEAR					LIVELOAD FACTORS	MOMENT					
								DISTRIBUTION FACTORS (DF)	RATING FACTOR	SPAN	GIRDER LOCATION	DISTANCE FROM LEFT END OF SPAN (ft)	DISTRIBUTION FACTORS (DF)	RATING FACTOR	SPAN	GIRDER LOCATION	DISTANCE FROM LEFT END OF SPAN (ft)		DISTRIBUTION FACTORS (DF)	RATING FACTOR	SPAN	GIRDER LOCATION	DISTANCE FROM LEFT END OF SPAN (ft)	
DESIGN LOAD RATING		HL-93(Inv)	N/A	**1**	1.223	--	1.75	0.278	1.87	30'	EL	14.482	0.629	**1.22**	30'	EL	**1.448**	0.80	0.278	1.60	30'	EL	14.482	
		HL-93(Opr)	N/A	--	1.586	--	1.35	0.278	2.42	30'	EL	14.482	0.629	1.59	30'	EL	1.448	N/A	--	--	--	--	--	
		HS-20(Inv)	36.000	**2**	1.396	50.263	1.75	0.278	2.57	30'	EL	11.586	0.629	**1.4**	30'	EL	**1.448**	0.80	0.278	2.23	30'	EL	11.586	
		HS-20(Opr)	36.000	--	1.81	65.156	1.35	0.278	3.34	30'	EL	11.586	0.629	1.81	30'	EL	1.448	N/A	--	--	--	--	--	
LEGAL LOAD RATING	SV	SNSH	13.500	--	3.415	46.108	1.4	0.278	5.27	30'	EL	14.482	0.629	3.42	30'	EL	1.448	0.80	0.278	3.61	30'	EL	14.482	
		SNGARBS2	20.000	--	2.643	52.856	1.4	0.278	4.6	30'	EL	11.586	0.629	2.64	30'	EL	1.448	0.80	0.278	3.19	30'	EL	11.586	
		SNAGRIS2	22.000	--	2.546	56.012	1.4	0.278	4.68	30'	EL	11.586	0.629	2.55	30'	EL	1.448	0.80	0.278	3.25	30'	EL	11.586	
		SNCOTTS3	27.250	--	1.725	47.014	1.4	0.278	2.64	30'	EL	14.482	0.629	1.73	30'	EL	1.448	0.80	0.278	1.81	30'	EL	14.482	
		SNAGGRS4	34.925	--	1.588	55.465	1.4	0.278	2.55	30'	EL	14.482	0.629	1.59	30'	EL	1.448	0.80	0.278	1.74	30'	EL	14.482	
		SNS5A	35.550	--	1.684	59.866	1.4	0.278	2.46	30'	EL	14.482	0.629	1.68	30'	EL	1.448	0.80	0.278	1.69	30'	EL	14.482	
		SNS6A	39.950	--	1.583	63.244	1.4	0.278	2.33	30'	EL	14.482	0.629	1.58	30'	EL	1.448	0.80	0.278	1.60	30'	EL	14.482	
		SNS7B	42.000	--	1.552	65.191	1.4	0.278	2.26	30'	EL	14.482	0.629	1.62	30'	EL	1.448	0.80	0.278	1.55	30'	EL	14.482	
	TTST	TNAGRIT3	33.000	--	1.881	62.062	1.4	0.278	3.02	30'	EL	14.482	0.629	1.88	30'	EL	1.448	0.80	0.278	2.07	30'	EL	14.482	
		TNT4A	33.075	--	1.75	57.88	1.4	0.278	2.86	30'	EL	14.482	0.629	1.75	30'	EL	1.448	0.80	0.278	1.97	30'	EL	14.482	
		TNT6A	41.600	--	1.691	70.356	1.4	0.278	2.6	30'	EL	14.482	0.629	1.69	30'	EL	1.448	0.80	0.278	1.78	30'	EL	14.482	
		TNT7A	42.000	--	1.609	67.589	1.4	0.278	2.69	30'	EL	14.482	0.629	1.61	30'	EL	1.448	0.80	0.278	1.84	30'	EL	14.482	
		TNT7B	42.000	--	1.571	66.001	1.4	0.278	2.53	30'	EL	14.482	0.629	1.57	30'	EL	1.448	0.80	0.278	1.74	30'	EL	14.482	
		TNAGRIT4	43.000	--	1.52	65.345	1.4	0.278	2.62	30'	EL	14.482	0.629	1.52	30'	EL	1.448	0.80	0.278	1.80	30'	EL	14.482	
		TNAGT5A	45.000	--	1.63	73.366	1.4	0.278	2.55	30'	EL	14.482	0.629	1.63	30'	EL	1.448	0.80	0.278	1.75	30'	EL	14.482	
		TNAGT5B	45.000	**3**	1.431	64.38	1.4	0.278	2.45	30'	EL	11.586	0.629	**1.43**	30'	EL	**1.448**	0.80	0.278	1.69	30'	EL	11.586	

LOAD FACTORS:

DESIGN LOAD RATING FACTORS	LIMIT STATE	γ_{DC}	γ_{DW}
	STRENGTH I	1.25	1.50
	SERVICE III	1.00	1.00

NOTES:

MINIMUM RATING FACTORS ARE BASED ON THE STRENGTH I AND SERVICE III LIMIT STATES.

ALLOWABLE STRESSES FOR SERVICE III LIMIT STATE ARE AS REQUIRED FOR DESIGN.

(#) CONTROLLING LOAD RATING

(1) DESIGN LOAD RATING (HL-93)

(2) DESIGN LOAD RATING (HS-20)

(3) LEGAL LOAD RATING **

** SEE CHART FOR VEHICLE TYPE

GIRDER LOCATION

I - INTERIOR GIRDER
EL - EXTERIOR LEFT GIRDER
ER - EXTERIOR RIGHT GIRDER

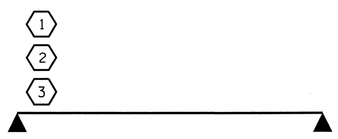

LRFR SUMMARY

FOR SPAN 'A' AND 'C'

PROJECT NO. BD-5105P
GRANVILLE COUNTY
STATION: 14+83.00 -L-

SHEET 1 OF 2

STATE OF NORTH CAROLINA
DEPARTMENT OF TRANSPORTATION
RALEIGH

STANDARD
LRFR SUMMARY FOR
30' CORED SLAB UNIT
75° SKEW & 105° SKEW
(NON-INTERSTATE TRAFFIC)

NORTH CAROLINA PROFESSIONAL SEAL 029441 ENGINEER KRISTY W. ALFORD

REVISIONS						SHEET NO.
NO.	BY:	DATE:	NO.	BY:	DATE:	S-3
1			3			TOTAL SHEETS
2			4			19

ASSEMBLED BY :	A.C. OUTLAW	DATE : 4/25/12
CHECKED BY :	Fr. Lea	DATE : 6/22/12
DRAWN BY : CVC	6/10	
CHECKED BY : DNS	6/10	

30-AUG-2012 12:44
S:\DPG2\KRISTY\DivisionProjects\BD5105P\Drafting\Miscellaneous\BD5105P_SD_LR_01.dgn
kalford

STD. NO. 21LRFR1_75&105S_30L

LOAD AND RESISTANCE FACTOR RATING (LRFD) SUMMARY FOR PRESTRESSED CONCRETE GIRDERS

LEVEL		VEHICLE	WEIGHT (W) (TONS)	CONTROLLING LOAD RATING	MINIMUM RATING FACTORS (RF)	TONS = W X RF	STRENGTH I LIMIT STATE											SERVICE III LIMIT STATE						COMMENT NUMBER
								MOMENT					SHEAR						MOMENT					
							LIVELOAD FACTORS	DISTRIBUTION FACTORS (DF)	RATING FACTOR	SPAN	GIRDER LOCATION	DISTANCE FROM LEFT END OF SPAN (ft)	DISTRIBUTION FACTORS (DF)	RATING FACTOR	SPAN	GIRDER LOCATION	DISTANCE FROM LEFT END OF SPAN (ft)	LIVELOAD FACTORS	DISTRIBUTION FACTORS (DF)	RATING FACTOR	SPAN	GIRDER LOCATION	DISTANCE FROM LEFT END OF SPAN (ft)	
DESIGN LOAD RATING		HL-93(Inv)	N/A	1	1.205	--	1.75	0.271	1.59	50'	EL	24.482	0.616	**1.2**	50'	EL	**4.896**	0.80	0.271	1.46	50'	EL	24.482	
		HL-93(Opr)	N/A	--	1.562	--	1.35	0.271	2.06	50'	EL	24.482	0.616	1.56	50'	EL	4.896	N/A	--	--	--	--	--	
		HS-20(Inv)	36.000	2	1.434	51.614	1.75	0.271	1.97	50'	EL	24.482	0.616	**1.43**	50'	EL	**4.896**	0.80	0.271	1.81	50'	EL	24.482	
		HS-20(Opr)	36.000	--	1.859	66.906	1.35	0.271	2.56	50'	EL	24.482	0.616	1.86	50'	EL	4.896	N/A	--	--	--	--	--	
LEGAL LOAD RATING	SV	SNSH	13.500	--	3.678	49.655	1.4	0.271	5.02	50'	EL	24.482	0.616	4	50'	EL	4.896	0.80	0.271	3.68	50'	EL	24.482	
		SNGARBS2	20.000	--	2.905	58.101	1.4	0.271	3.97	50'	EL	24.482	0.616	2.93	50'	EL	4.896	0.80	0.271	2.91	50'	EL	24.482	
		SNAGRIS2	22.000	--	2.748	60.456	1.4	0.271	3.83	50'	EL	19.586	0.616	2.75	50'	EL	4.896	0.80	0.271	2.81	50'	EL	24.482	
		SNCOTTS3	27.250	--	1.835	49.998	1.4	0.271	2.5	50'	EL	24.482	0.616	2.01	50'	EL	4.896	0.80	0.271	1.83	50'	EL	24.482	
		SNAGGRS4	34.925	--	1.595	55.714	1.4	0.271	2.18	50'	EL	24.482	0.616	1.72	50'	EL	4.896	0.80	0.271	1.60	50'	EL	24.482	
		SNS5A	35.550	--	1.556	55.303	1.4	0.271	2.12	50'	EL	24.482	0.616	1.77	50'	EL	4.896	0.80	0.271	1.56	50'	EL	24.482	
		SNS6A	39.950	--	1.455	58.112	1.4	0.271	1.99	50'	EL	24.482	0.616	1.64	50'	EL	4.896	0.80	0.271	1.45	50'	EL	24.482	
		SNS7B	42.000	--	1.386	58.224	1.4	0.271	1.89	50'	EL	24.482	0.616	1.65	50'	EL	4.896	0.80	0.271	1.39	50'	EL	24.482	
	TTST	TNAGRIT3	33.000	--	1.782	58.809	1.4	0.271	2.43	50'	EL	24.482	0.616	1.94	50'	EL	4.896	0.80	0.271	1.78	50'	EL	24.482	
		TNT4A	33.075	--	1.798	59.458	1.4	0.271	2.45	50'	EL	24.482	0.616	1.86	50'	EL	4.896	0.80	0.271	1.80	50'	EL	24.482	
		TNT6A	41.600	--	1.497	62.293	1.4	0.271	2.04	50'	EL	24.482	0.616	1.8	50'	EL	4.896	0.80	0.271	1.50	50'	EL	24.482	
		TNT7A	42.000	--	1.52	63.842	1.4	0.271	2.08	50'	EL	24.482	0.616	1.67	50'	EL	4.896	0.80	0.271	1.52	50'	EL	24.482	
		TNT7B	42.000	--	1.585	66.559	1.4	0.271	2.16	50'	EL	24.482	0.616	1.59	50'	EL	4.896	0.80	0.271	1.58	50'	EL	24.482	
		TNAGRIT4	43.000	--	1.504	64.667	1.4	0.271	2.05	50'	EL	24.482	0.616	1.53	50'	EL	4.896	0.80	0.271	1.50	50'	EL	24.482	
		TNAGT5A	45.000	--	1.405	63.217	1.4	0.271	1.92	50'	EL	24.482	0.616	1.56	50'	EL	4.896	0.80	0.271	1.40	50'	EL	24.482	
		TNAGT5B	45.000	3	1.376	61.936	1.4	0.271	1.88	50'	EL	24.482	0.616	1.45	50'	EL	4.896	0.80	0.271	**1.38**	50'	EL	**24.482**	

LOAD FACTORS:

DESIGN LOAD RATING FACTORS	LIMIT STATE	γ_{DC}	γ_{DW}
	STRENGTH I	1.25	1.50
	SERVICE III	1.00	1.00

NOTES:

MINIMUM RATING FACTORS ARE BASED ON THE STRENGTH I AND SERVICE III LIMIT STATES.

ALLOWABLE STRESSES FOR SERVICE III LIMIT STATE ARE AS REQUIRED FOR DESIGN.

(#) CONTROLLING LOAD RATING

(1) DESIGN LOAD RATING (HL-93)

(2) DESIGN LOAD RATING (HS-20)

(3) LEGAL LOAD RATING **

** SEE CHART FOR VEHICLE TYPE

GIRDER LOCATION

I - INTERIOR GIRDER
EL - EXTERIOR LEFT GIRDER
ER - EXTERIOR RIGHT GIRDER

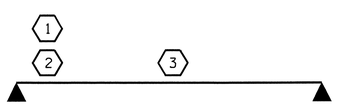

LRFR SUMMARY

FOR SPAN 'B'

PROJECT NO. BD-5105P

GRANVILLE COUNTY

STATION: 14+83.00 -L-

SHEET 2 OF 2

STATE OF NORTH CAROLINA
DEPARTMENT OF TRANSPORTATION
RALEIGH

STANDARD

LRFR SUMMARY FOR 50' CORED SLAB UNIT 75° SKEW & 105° SKEW (NON-INTERSTATE TRAFFIC)

NORTH CAROLINA PROFESSIONAL SEAL 029441 ENGINEER KRISTY W. ALFORD

REVISIONS						SHEET NO.
NO.	BY:	DATE:	NO.	BY:	DATE:	S-4
1			3			TOTAL SHEETS
2			4			19

ASSEMBLED BY :	A.C. OUTLAW	DATE : 4/25/12
CHECKED BY :	Fr. Lea	DATE : 6/22/12
DRAWN BY : CVC	6/10	
CHECKED BY : DNS	6/10	

30-AUG-2012 12:44
S:\DPG2\KRISTY\DivisionProjects\BD5105P\Drafting\Miscellaneous\BD5105P_SD_LR_01.dgn
kalford

STD. NO. 21LRFR1_75&105S_50L

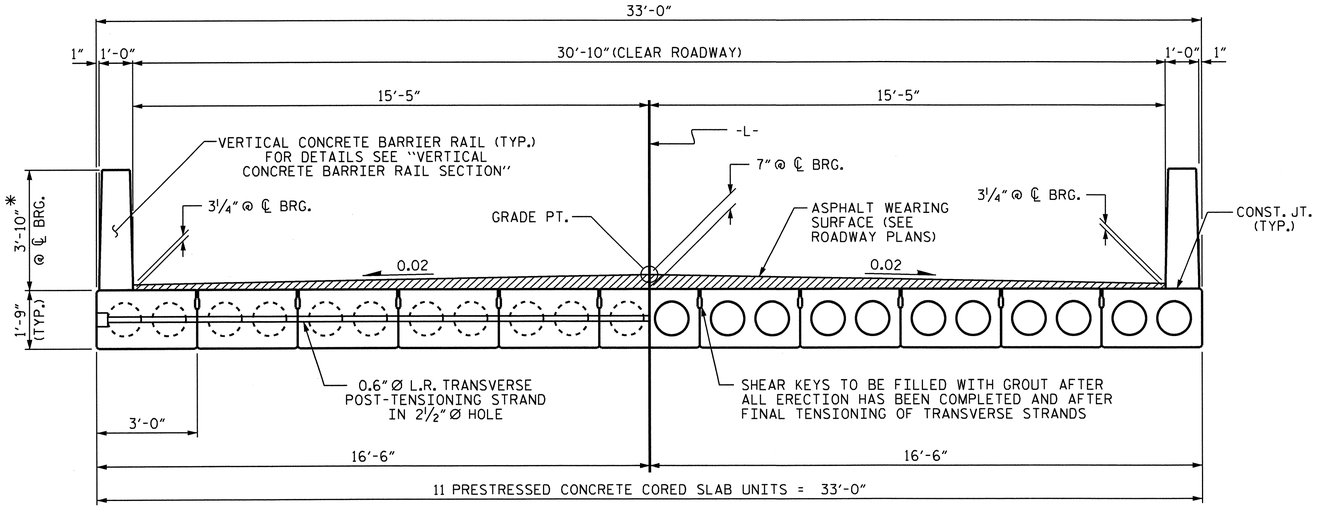

HALF SECTION
AT INTERMEDIATE DIAPHRAGMS

HALF SECTION
THROUGH VOIDS

TYPICAL SECTION

* - THE MAXIMUM BARRIER RAIL HEIGHT AND ASPHALT THICKNESS IS SHOWN. THE HEIGHT OF THE BARRIER RAIL AND ASPHALT THICKNESS VARIES WHILE THE TOP OF THE BARRIER RAIL FOLLOWS THE PROFILE OF THE GUTTERLINE. FOR RAIL HEIGHT DETAILS AND ASPHALT THICKNESS SEE THE "VERTICAL CONCRETE BARRIER RAIL SECTION" DETAIL.

FIXED END

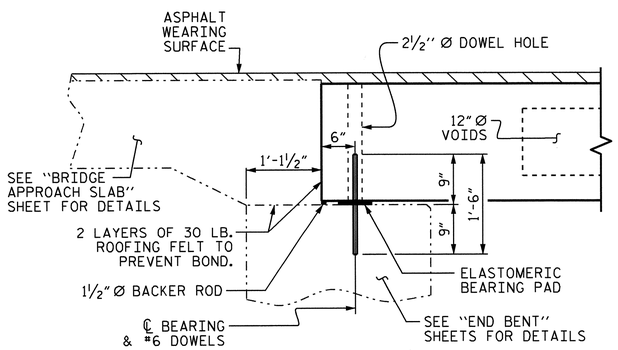

SECTION AT END BENT

FIXED END FIXED END

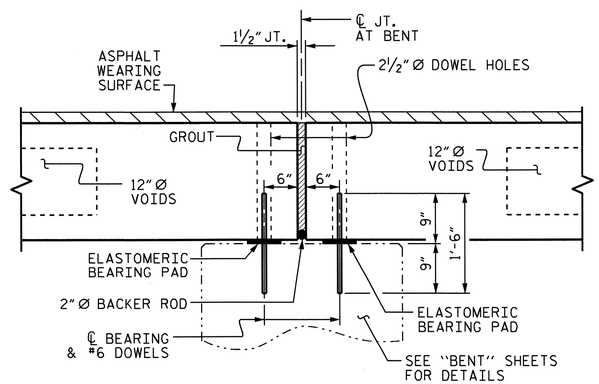

SECTION AT BENT

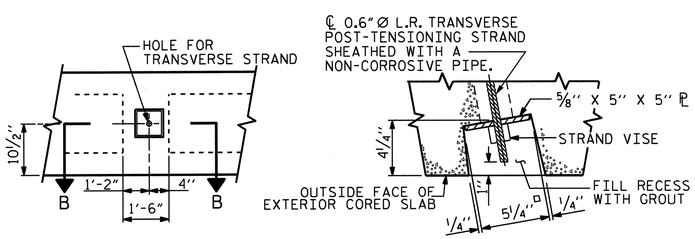

ELEVATION VIEW

SECTION B-B

GROUTED RECESS AT END OF POST-TENSIONED STRAND OF CORED SLABS

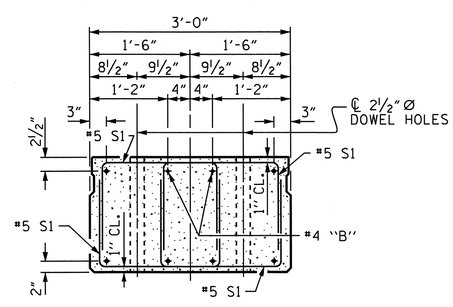

END ELEVATION

SHOWING PLACEMENT OF DOUBLE STIRRUPS AND LOCATION OF DOWEL HOLES. (STRAND LAYOUT NOT SHOWN.) INTERIOR SLAB UNIT SHOWN-EXTERIOR SLAB UNIT SIMILAR EXCEPT SHEAR KEY LOCATION.

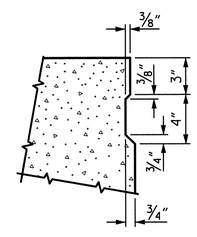

SHEAR KEY DETAIL

NOTE: OMIT SHEAR KEY ON OUTSIDE FACE OF EXTERIOR CORED SLABS.

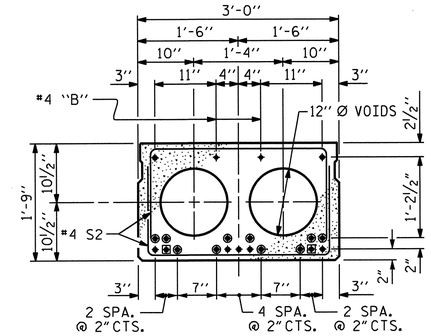

INTERIOR SLAB SECTION
(30' UNIT)
(9 STRANDS REQUIRED)

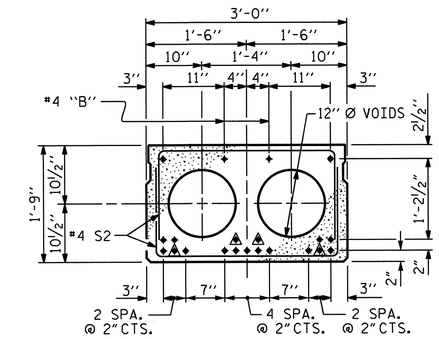

INTERIOR SLAB SECTION
(50' UNIT)
(19 STRANDS REQUIRED)

0.6" Ø LOW RELAXATION STRAND LAYOUT

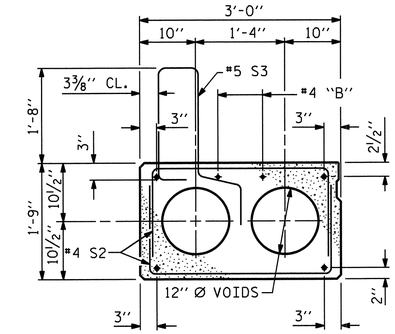

EXT. SLAB SECTION

(FOR PRESTRESSED STRAND LAYOUT, SEE INTERIOR SLAB SECTION.)

▲ BOND SHALL BE BROKEN ON THESE STRANDS FOR A DISTANCE OF 6'-0" FROM END OF CORED SLAB UNIT. SEE STANDARD SPECIFICATIONS, ARTICLE 1078-7.

◉ BOND SHALL BE BROKEN ON THESE STRANDS FOR A DISTANCE OF 2'-0" FROM END OF CORED SLAB UNIT. SEE STANDARD SPECIFICATIONS, ARTICLE 1078-7.

◎ OPTIONAL FULL LENGTH DEBONDED STRANDS. THESE STRANDS ARE NOT REQUIRED. IF THE FABRICATOR CHOOSES TO INCLUDE THESE STRANDS IN THE CORED SLAB UNIT, THE STRANDS SHALL BE DEBONDED FOR THE FULL LENGTH OF THE UNIT AT NO ADDITIONAL COST. SEE STANDARD SPECIFICATIONS, ARTICLE 1078-7.

DEBONDING LEGEND

PROJECT NO. BD-5105P
GRANVILLE COUNTY
STATION: 14+83.00 -L-

SHEET 1 OF 5

STATE OF NORTH CAROLINA
DEPARTMENT OF TRANSPORTATION
RALEIGH

STANDARD
3'-0" X 1'-9"
PRESTRESSED CONCRETE
CORED SLAB UNIT
75° SKEW

REVISIONS						SHEET NO.
NO.	BY:	DATE:	NO.	BY:	DATE:	S-5
1			3			TOTAL SHEETS
2			4			19

STD. NO. 21" PCS2_33_75S

ASSEMBLED BY :	A.C. OUTLAW	DATE :	4/25/12
CHECKED BY :	Fr. Leg	DATE :	6/22/12
DRAWN BY : DGE	5/09	REV. 12/11	MAA/AAC
CHECKED BY : BCH	6/09		

30-AUG-2012 12:44
S:\OPG2\KRISTY\DivisionProjects\BD5105P\Drafting\Superstructure\BD5105P_SD_CS_01.dgn
kalford

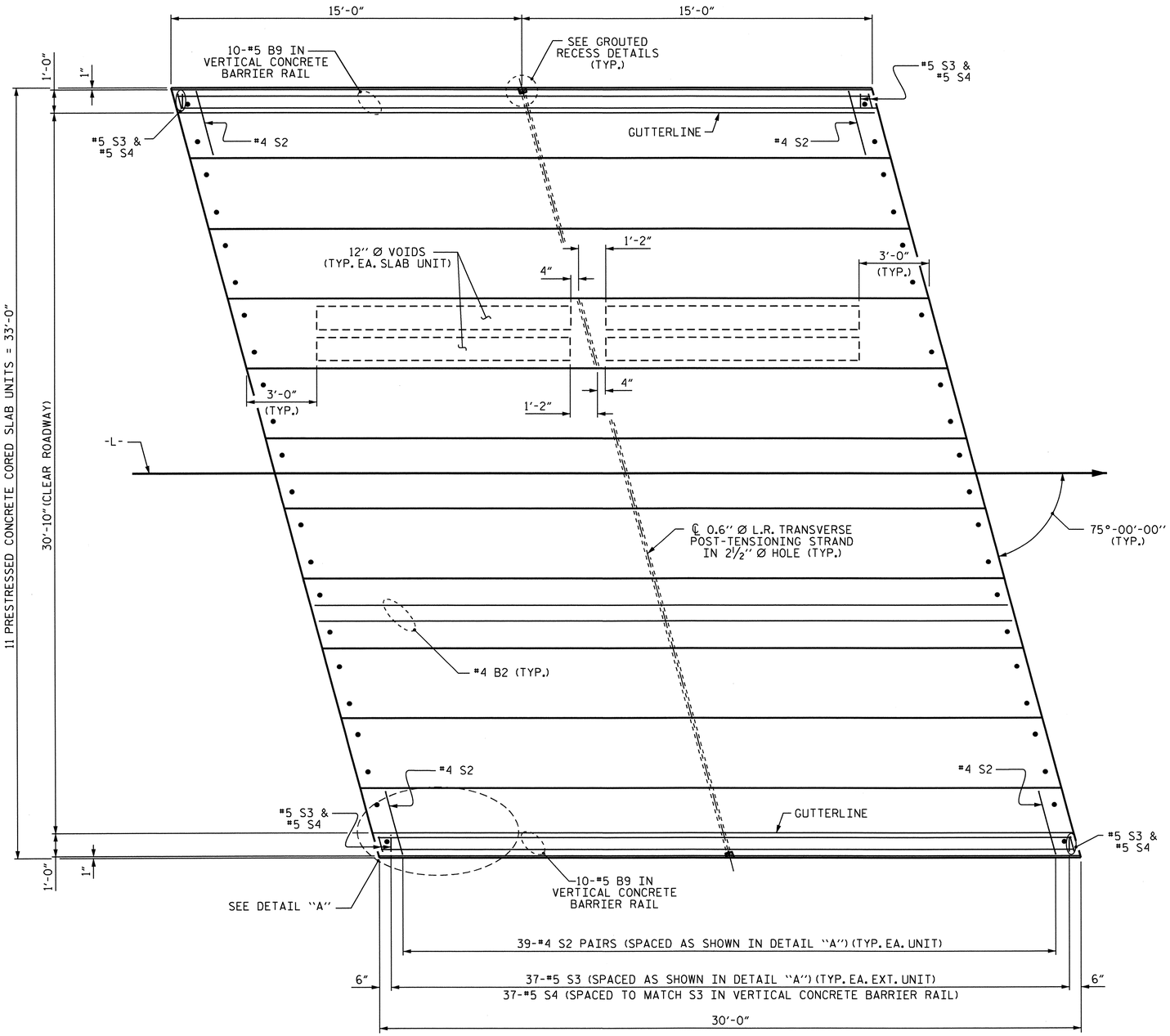

PLAN OF SPAN A OR C

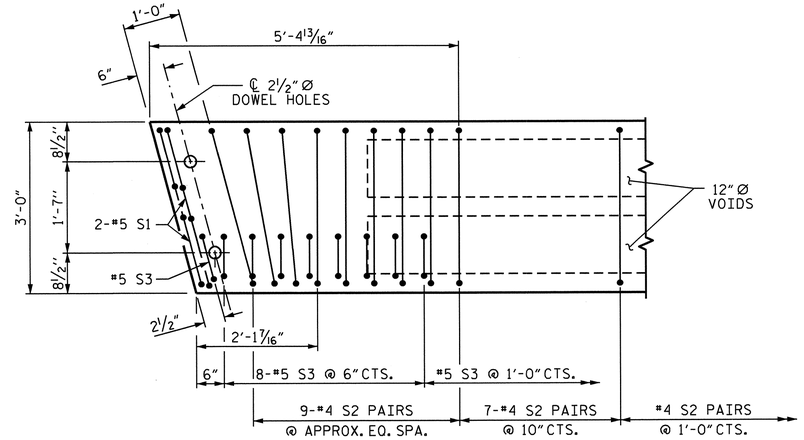

DETAIL "A"

NOTE: EXTERIOR UNIT SHOWN - INTERIOR UNIT SIMILAR EXCEPT OMIT #5 S3 BARS.

PROJECT NO. BD-5105P

GRANVILLE COUNTY

STATION: 14+83.00 -L-

SHEET 2 OF 5

STATE OF NORTH CAROLINA
DEPARTMENT OF TRANSPORTATION
RALEIGH

PLAN OF 30' UNIT
30'-10" CLEAR ROADWAY
75° SKEW

NORTH CAROLINA PROFESSIONAL SEAL 20541 ENGINEER KRISTY W. ALFORD

REVISIONS						SHEET NO.
NO.	BY:	DATE:	NO.	BY:	DATE:	S-6
1			3			TOTAL SHEETS
2			4			19

ASSEMBLED BY :	A.C. OUTLAW	DATE :	4/25/12
CHECKED BY :	Fr. Lea	DATE :	6/22/12
DRAWN BY : DGE 3/09	REV. 12/5/11 MAA/AAC		
CHECKED BY : BCH 3/09			

30-AUG-2012 12:43
S:\DPG2\KRISTY\DivisionProjects\BD5105P\Drafting\Superstructure\BD5105P_SD_CS_01.dgn
kalford

STD. NO. 21" PCS_33_75S_30L

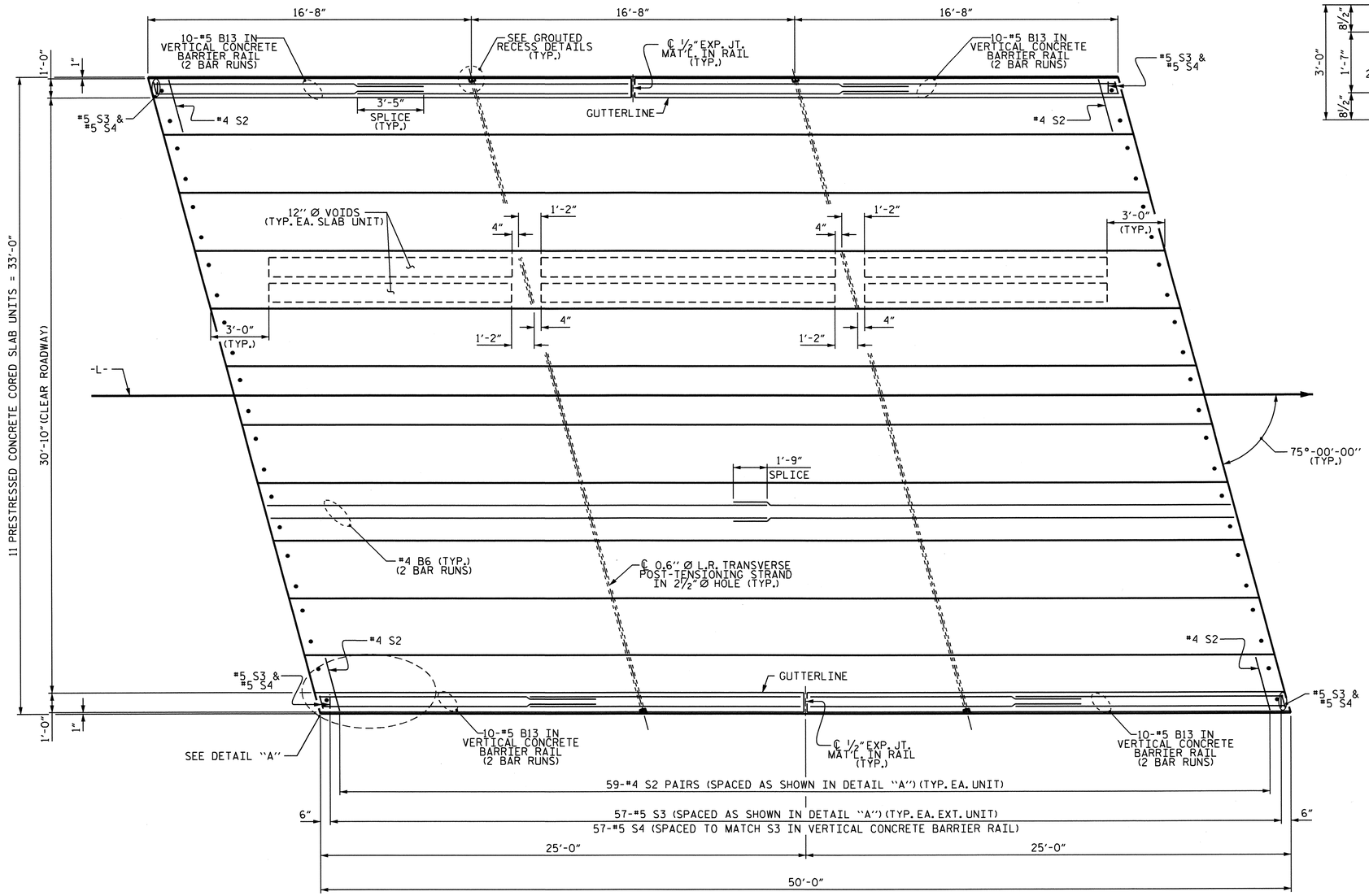

PLAN OF SPAN B

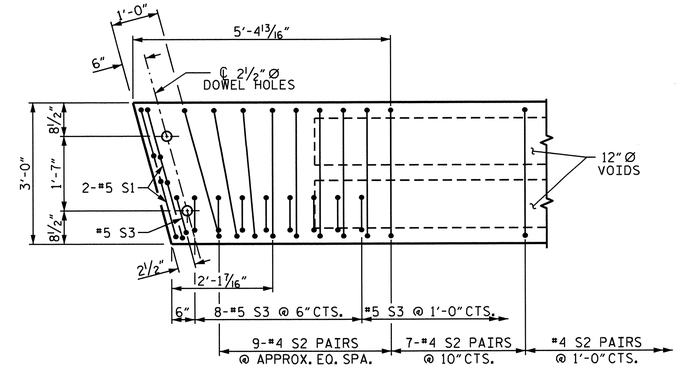

DETAIL "A"

NOTE: EXTERIOR UNIT SHOWN - INTERIOR UNIT SIMILAR EXCEPT OMIT #5 S3 BARS.

PROJECT NO. BD-5105P

GRANVILLE COUNTY

STATION: 14+83.00 -L-

SHEET 3 OF 5

STATE OF NORTH CAROLINA
DEPARTMENT OF TRANSPORTATION
RALEIGH

PLAN OF 50' UNIT
30'-10" CLEAR ROADWAY
75° SKEW

NORTH CAROLINA PROFESSIONAL SEAL 026494 ENGINEER KRISTY W. ALFORD 8-30-12

REVISIONS							SHEET NO.
NO.	BY:	DATE:	NO.	BY:	DATE:		S-7
1			3				TOTAL SHEETS
2			4				19

ASSEMBLED BY :	A.C. OUTLAW	DATE :	4/25/12
CHECKED BY :	Fr. Lea	DATE :	6/22/12
DRAWN BY : DGE 5/09	REV. 12/5/11 MAA/AAC		
CHECKED BY: BCH 6/09			

30-AUG-2012 12:43
S:\DPG2\KRISTY\DivisionProjects\BD5105P\Drafting\Superstructure\BD5105P_SD_CS_01.dgn
kalford

STD. NO. 21" PCS_33_75S_50L

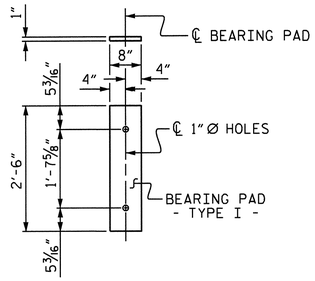

FIXED END
(TYPE I - 66 REQ'D)

ELASTOMERIC BEARING DETAILS

ELASTOMER IN ALL BEARINGS SHALL BE 50 DUROMETER HARDNESS.

CONCRETE RELEASE STRENGTH	
UNIT	PSI
30' UNIT	4000
50' UNIT	4900

BILL OF MATERIAL FOR ONE 30' CORED SLAB UNIT

				EXTERIOR UNIT		INTERIOR UNIT	
BAR	NUMBER	SIZE	TYPE	LENGTH	WEIGHT	LENGTH	WEIGHT
B2	2	#4	STR	29'-7"	40	29'-7"	40
S1	8	#5	3	4'-3"	35	4'-3"	35
S2	78	#4	3	5'-4"	278	5'-4"	278
✻ S3	39	#5	1	6'-2"	251		
REINFORCING STEEL			LBS.		353		353
✻ EPOXY COATED REINFORCING STEEL			LBS.		251		
5000 P.S.I. CONCRETE			CU. YDS.		4.5		4.5
0.6" Ø L.R. STRANDS			No.		9		9

BILL OF MATERIAL FOR ONE 50' CORED SLAB UNIT

				EXTERIOR UNIT		INTERIOR UNIT	
BAR	NUMBER	SIZE	TYPE	LENGTH	WEIGHT	LENGTH	WEIGHT
B6	4	#4	STR	25'-9"	69	25'-9"	69
S1	8	#5	3	4'-3"	35	4'-3"	35
S2	118	#4	3	5'-4"	420	5'-4"	420
✻ S3	59	#5	1	6'-2"	379		
REINFORCING STEEL			LBS.		524		524
✻ EPOXY COATED REINFORCING STEEL			LBS.		379		
6500 P.S.I. CONCRETE			CU. YDS.		7.3		7.3
0.6" Ø L.R. STRANDS			No.		19		19

GRADE 270 STRANDS	
	0.6" Ø L.R.
AREA (SQUARE INCHES)	0.217
ULTIMATE STRENGTH (LBS. PER STRAND)	58,600
APPLIED PRESTRESS (LBS. PER STRAND)	43,950

BAR TYPES

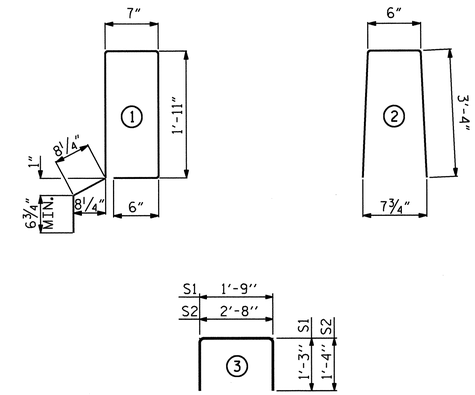

ALL BAR DIMENSIONS ARE OUT TO OUT

DEAD LOAD DEFLECTION AND CAMBER

	3'-0" x 1'-9"
30' CORED SLAB UNIT	0.6" Ø L.R. STRAND
CAMBER (SLAB ALONE IN PLACE)	1/2" ↑
DEFLECTION DUE TO SUPERIMPOSED DEAD LOAD✻✻	1/8" ↓
FINAL CAMBER	3/8" ↑

✻✻ INCLUDES FUTURE WEARING SURFACE

DEAD LOAD DEFLECTION AND CAMBER

	3'-0" x 1'-9"
50' CORED SLAB UNIT	0.6" Ø L.R. STRAND
CAMBER (SLAB ALONE IN PLACE)	2 1/2" ↑
DEFLECTION DUE TO SUPERIMPOSED DEAD LOAD✻✻	1/4" ↓
FINAL CAMBER	2 1/4" ↑

✻✻ INCLUDES FUTURE WEARING SURFACE

NOTES

ALL PRESTRESSING STRANDS SHALL BE 7-WIRE LOW RELAXATION GRADE 270 STRANDS AND SHALL CONFORM TO AASHTO M203 EXCEPT FOR SAMPLING REQUIREMENTS WHICH SHALL BE IN ACCORDANCE WITH THE STANDARD SPECIFICATIONS.

ALL REINFORCING STEEL CAST WITH THE CORED SLAB SECTIONS SHALL BE GRADE 60 AND SHALL BE INCLUDED IN THE UNIT PRICE BID FOR PRESTRESSED CONCRETE CORED SLABS.

RECESSES FOR TRANSVERSE STRANDS SHALL BE GROUTED AFTER THE TENSIONING OF THE STRANDS.

THE 2 1/2" Ø DOWEL HOLES AT FIXED ENDS OF SLAB SECTIONS SHALL BE FILLED WITH NON-SHRINK GROUT.

THE BACKER RODS SHALL CONFORM TO THE REQUIREMENTS OF TYPE M BOND BREAKER. SEE SECTION 1028 OF THE STANDARD SPECIFICATIONS.

WHEN CORED SLABS ARE CAST, AN INTERNAL HOLD-DOWN SYSTEM SHALL BE EMPLOYED TO PREVENT VOIDS FROM RISING OR MOVING SIDEWAYS. AT LEAST SIX WEEKS PRIOR TO CASTING CORED SLABS, THE CONTRACTOR SHALL SUBMIT TO THE ENGINEER FOR REVIEW AND COMMENT, DETAILED DRAWINGS OF THE PROPOSED HOLD-DOWN SYSTEM. IN ADDITION TO STRUCTURAL DETAILS, LOCATION AND SPACING OF THE HOLD-DOWNS SHALL BE INDICATED.

ALL REINFORCING STEEL IN THE VERTICAL CONCRETE BARRIER RAIL SHALL BE EPOXY COATED.

PRESTRESSING STRANDS SHALL BE CUT FLUSH WITH THE CORED SLAB UNIT ENDS.

APPLY EPOXY PROTECTIVE COATING TO CORED SLAB UNIT ENDS.

GROOVED CONTRACTION JOINTS, 1/2" IN DEPTH, SHALL BE TOOLED IN ALL EXPOSED FACES OF THE BARRIER RAIL AND IN ACCORDANCE WITH ARTICLE 825-10(B) OF THE STANDARD SPECIFICATIONS. A CONTRACTION JOINT SHALL BE LOCATED AT EACH THIRD POINT BETWEEN BARRIER RAIL EXPANSION JOINTS. ONLY ONE CONTRACTION JOINT IS REQUIRED AT MIDPOINT OF BARRIER RAIL SEGMENTS LESS THAN 20 FEET IN LENGTH AND NO CONTRACTION JOINTS ARE REQUIRED FOR THOSE SEGMENTS LESS THAN 10 FEET IN LENGTH.

TRANSVERSE POST TENSIONING OF THE CORED SLAB UNITS SHALL BE DONE IN ACCORDANCE WITH THE STANDARD SPECIFICATIONS.

THE TRANSFER OF LOAD FROM THE ANCHORAGES TO THE CORED SLAB UNIT SHALL BE DONE WHEN THE CONCRETE HAS REACHED A COMPRESSIVE STRENGTH OF NOT LESS THAN THE REQUIRED STRENGTH SHOWN IN THE "CONCRETE RELEASE STRENGTH" TABLE.

FOR GROUT FOR STRUCTURES, SEE SPECIAL PROVISIONS.

CORED SLABS REQUIRED

	NUMBER	LENGTH	TOTAL LENGTH
30' UNIT			
EXTERIOR C.S.	4	30'-0"	120'-0"
INTERIOR C.S.	18	30'-0"	540'-0"
TOTAL	22	30'-0"	660'-0"

CORED SLABS REQUIRED

	NUMBER	LENGTH	TOTAL LENGTH
50' UNIT			
EXTERIOR C.S.	2	50'-0"	100'-0"
INTERIOR C.S.	9	50'-0"	450'-0"
TOTAL	11	50'-0"	550'-0"

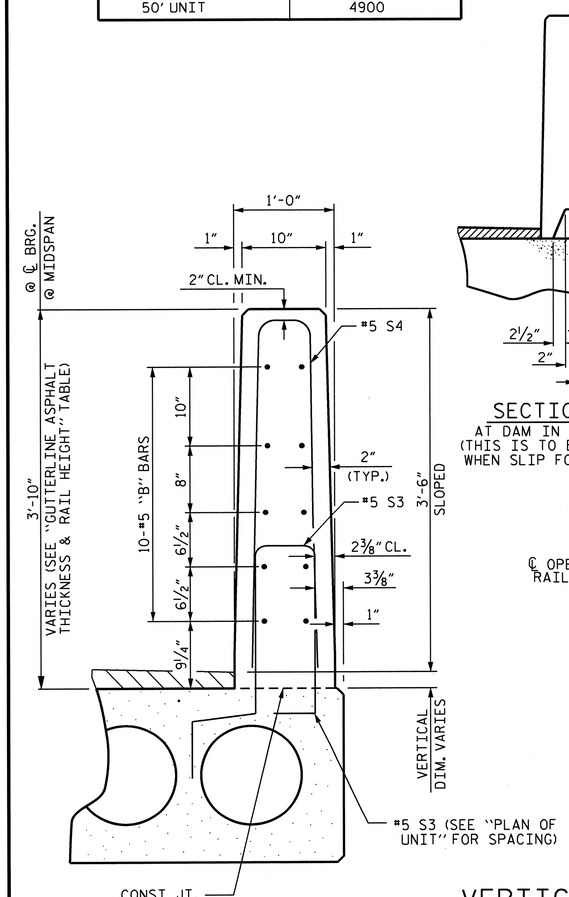

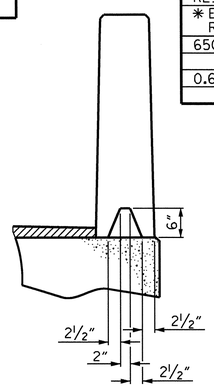

SECTION S-S
AT DAM IN OPEN JOINT
(THIS IS TO BE USED ONLY WHEN SLIP FORM IS USED)

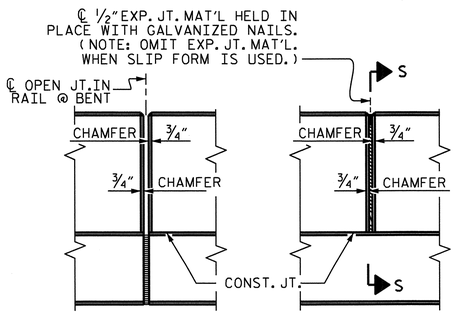

ELEVATION AT EXPANSION JOINTS

BILL OF MATERIAL FOR VERTICAL CONCRETE BARRIER RAIL

BAR	BARS PER PAIR OF EXTERIOR UNITS	TOTAL NO.	SIZE	TYPE	LENGTH	WEIGHT
	30' UNIT					
✻ B9	20	40	#5	STR	29'-6"	1231
✻ S4	78	156	#5	2	7'-2"	1166
✻ EPOXY COATED REINFORCING STEEL				LBS.		2397
CLASS AA CONCRETE				CU.YDS.		15.8
TOTAL VERTICAL CONCRETE BARRIER RAIL				LN. FT.		120.50

BILL OF MATERIAL FOR VERTICAL CONCRETE BARRIER RAIL

BAR	BARS PER PAIR OF EXTERIOR UNITS	TOTAL NO.	SIZE	TYPE	LENGTH	WEIGHT
	50' UNIT					
✻ B13	80	80	#5	STR	14'-2"	1182
✻ S4	118	118	#5	2	7'-2"	882
✻ EPOXY COATED REINFORCING STEEL				LBS.		2064
CLASS AA CONCRETE				CU.YDS.		13.1
TOTAL VERTICAL CONCRETE BARRIER RAIL				LN. FT.		100.25

GUTTERLINE ASPHALT THICKNESS & RAIL HEIGHT

	ASPHALT OVERLAY THICKNESS	RAIL HEIGHT
	@ MID-SPAN	@ MID-SPAN
30' UNIT	2 7/8"	3'-9 5/8"
50' UNIT	1"	3'-7 3/4"

VERTICAL CONCRETE BARRIER RAIL DETAILS

PROJECT NO. BD-5105P
GRANVILLE COUNTY
STATION: 14+83.00 -L-

SHEET 4 OF 5

STATE OF NORTH CAROLINA
DEPARTMENT OF TRANSPORTATION
RALEIGH

STANDARD
3'-0" X 1'-9"
PRESTRESSED CONCRETE
CORED SLAB UNIT
75° SKEW

NORTH CAROLINA PROFESSIONAL SEAL 029441 ENGINEER KRISTY W. ALFORD

REVISIONS						SHEET NO.
NO.	BY:	DATE:	NO.	BY:	DATE:	S-8
1			3			TOTAL SHEETS
2			4			19

ASSEMBLED BY :	A.C. OUTLAW	DATE :	4/25/12
CHECKED BY :	Fr. Lea	DATE :	6/22/12
DRAWN BY :	DGE 5/09	REV. 12/11	MAA/AAC
CHECKED BY :	BCH 6/09		

30-AUG-2012 12:43
S:\DPG2\KRISTY\DivisionProjects\BD5105P\Drafting\Superstructure\BD5105P_SD_CS_01.dgn

STD. NO. 21" PCS3_33_75S

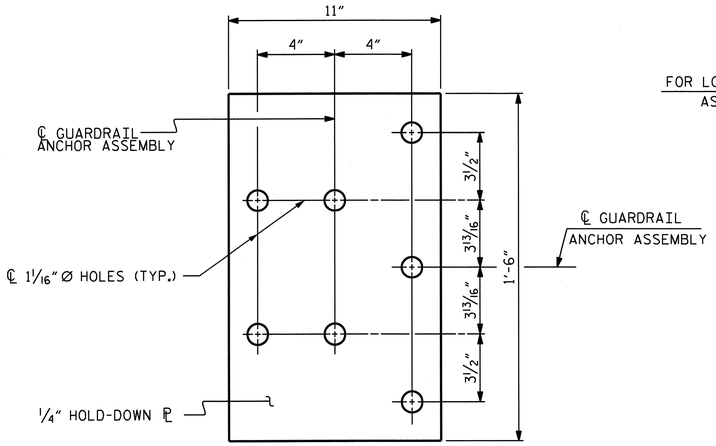

PLAN

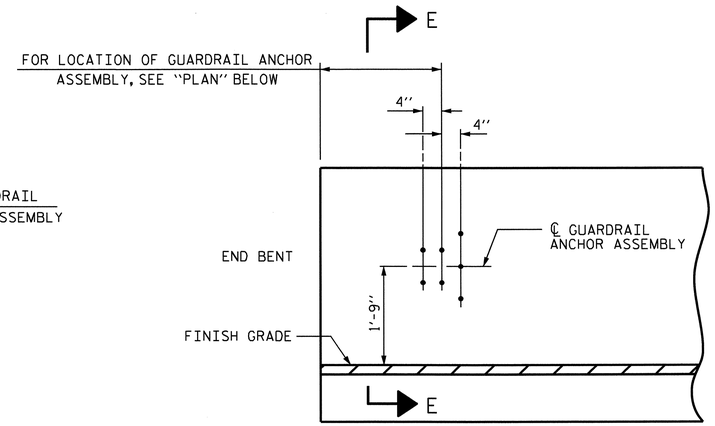

ELEVATION

NOTES

THE GUARDRAIL ANCHOR ASSEMBLY SHALL CONSIST OF A 1/4" HOLD DOWN PLATE AND 7 - 7/8" Ø BOLTS WITH NUTS AND WASHERS.

THE HOLD-DOWN PLATE SHALL CONFORM TO AASHTO M270 GRADE 36. AFTER FABRICATION, THE HOLD-DOWN PLATE SHALL BE HOT-DIP GALVANIZED IN ACCORDANCE WITH AASHTO M111.

BOLTS SHALL CONFORM TO THE REQUIREMENTS OF ASTM A307 AND NUTS SHALL CONFORM TO THE REQUIREMENTS OF AASHTO M291. BOLTS, NUTS AND WASHERS SHALL BE GALVANIZED. (AT THE CONTRACTOR'S OPTION, STAINLESS STEEL BOLTS, NUTS AND WASHERS MAY BE USED AS AN ALTERNATE FOR THE 7/8" Ø GALVANIZED BOLTS, NUTS AND WASHERS. THEY SHALL CONFORM TO OR EXCEED THE MECHANICAL REQUIREMENTS OF ASTM A307. THE USE OF THIS ALTERNATE SHALL BE APPROVED BY THE ENGINEER.)

THE GUARDRAIL ANCHOR ASSEMBLY IS REQUIRED AT ALL POINTS WHERE APPROACH GUARDRAIL IS TO BE ATTACHED TO THE END OF BARRIER RAIL. FOR POINTS OF ATTACHMENT, SEE SKETCH.

AFTER INSTALLATION, THE EXPOSED THREAD OF THE BOLT SHALL BE BURRED WITH A SHARP POINTED TOOL.

THE COST OF THE GUARDRAIL ANCHOR ASSEMBLY SHALL BE INCLUDED IN THE UNIT CONTRACT PRICE BID FOR VERTICAL CONCRETE BARRIER RAIL.

THE VERTICAL REINFORCING BARS MAY BE SHIFTED SLIGHTLY IN THE VERTICAL CONCRETE BARRIER RAIL TO CLEAR ASSEMBLY BOLTS.

THE 1 1/4" Ø HOLES SHALL BE FORMED OR DRILLED WITH A CORE BIT. IMPACT TOOLS WILL NOT BE PERMITTED. ANY CONCRETE DAMAGED BY THIS WORK SHALL BE REPAIRED TO THE SATISFACTION OF THE ENGINEER.

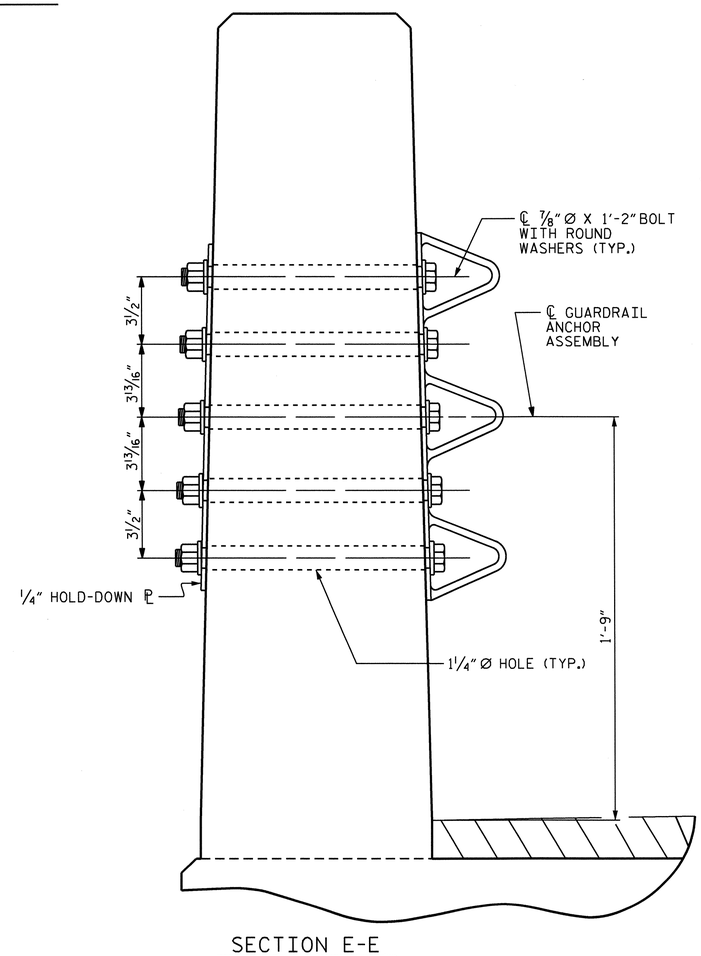

SECTION E-E

GUARDRAIL ANCHOR ASSEMBLY DETAILS

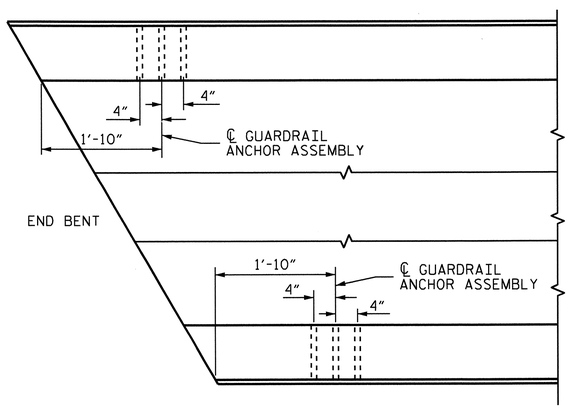

PLAN

LOCATION OF ANCHORS FOR GUARDRAIL

END BENT #1 SHOWN, END BENT #2 SIMILAR.

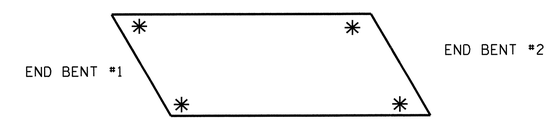

SKETCH SHOWING POINTS OF ATTACHMENT

✳ DENOTES GUARDRAIL ANCHOR ASSEMBLY

PROJECT NO. BD-5105P

GRANVILLE COUNTY

STATION: 14+83.00 -L-

SHEET 5 OF 5

STATE OF NORTH CAROLINA
DEPARTMENT OF TRANSPORTATION
RALEIGH

STANDARD
GUARDRAIL ANCHORAGE FOR VERTICAL CONCRETE BARRIER RAIL

NORTH CAROLINA PROFESSIONAL SEAL 029641 ENGINEER KRISTY W. ALFORD

REVISIONS							SHEET NO.
NO.	BY:	DATE:	NO.	BY:	DATE:		S-9
1			3				TOTAL SHEETS
2			4				19

ASSEMBLED BY : A.C. OUTLAW	DATE : 4/25/12
CHECKED BY : Fr. Lea	DATE : 6/22/12
DRAWN BY : MAA 5/10	ADDED 5/6/10
CHECKED BY : GM 5/10	REV. 10/1/11 MAA/GM
	REV. 12/5/11 MAA/GM

30-AUG-2012 12:42
S:\DPG2\KRISTY\DivisionProjects\BD5105P\Drafting\Miscellaneous\BD5105P_SD_GR_01.dgn
kalford

(SHT 3) STD. NO. GRA3

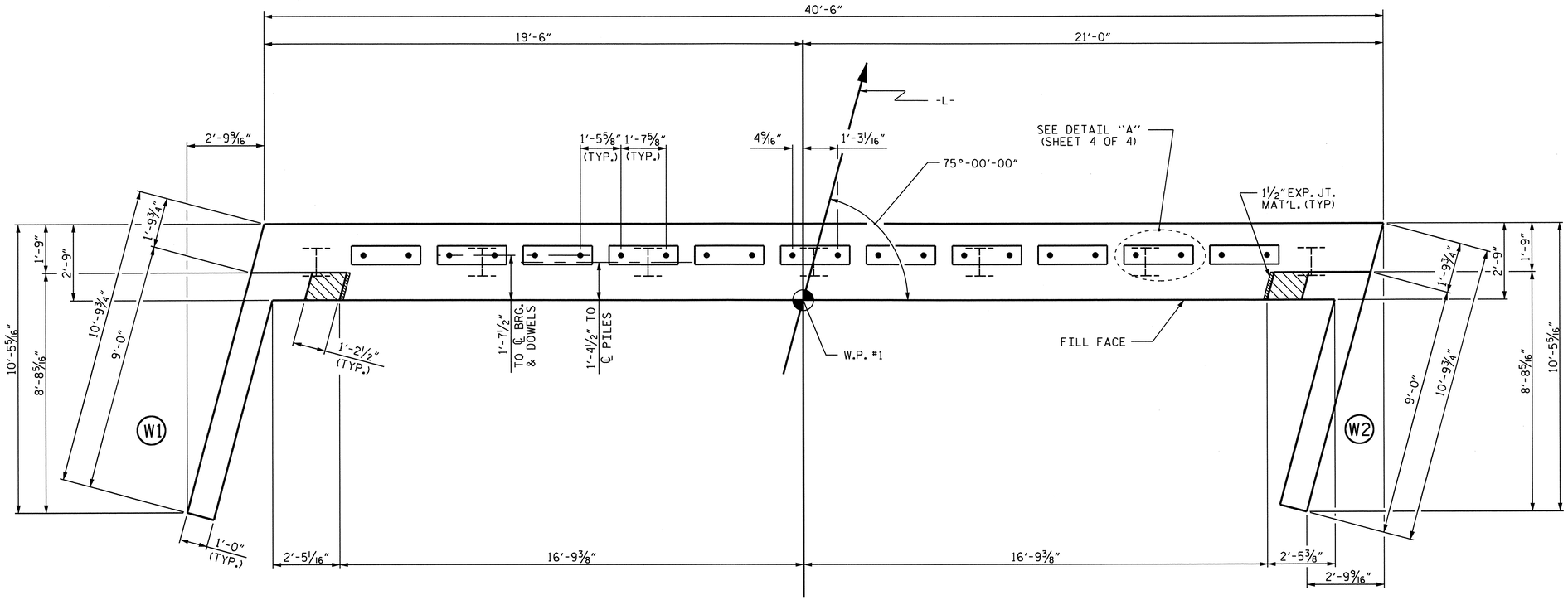

PLAN

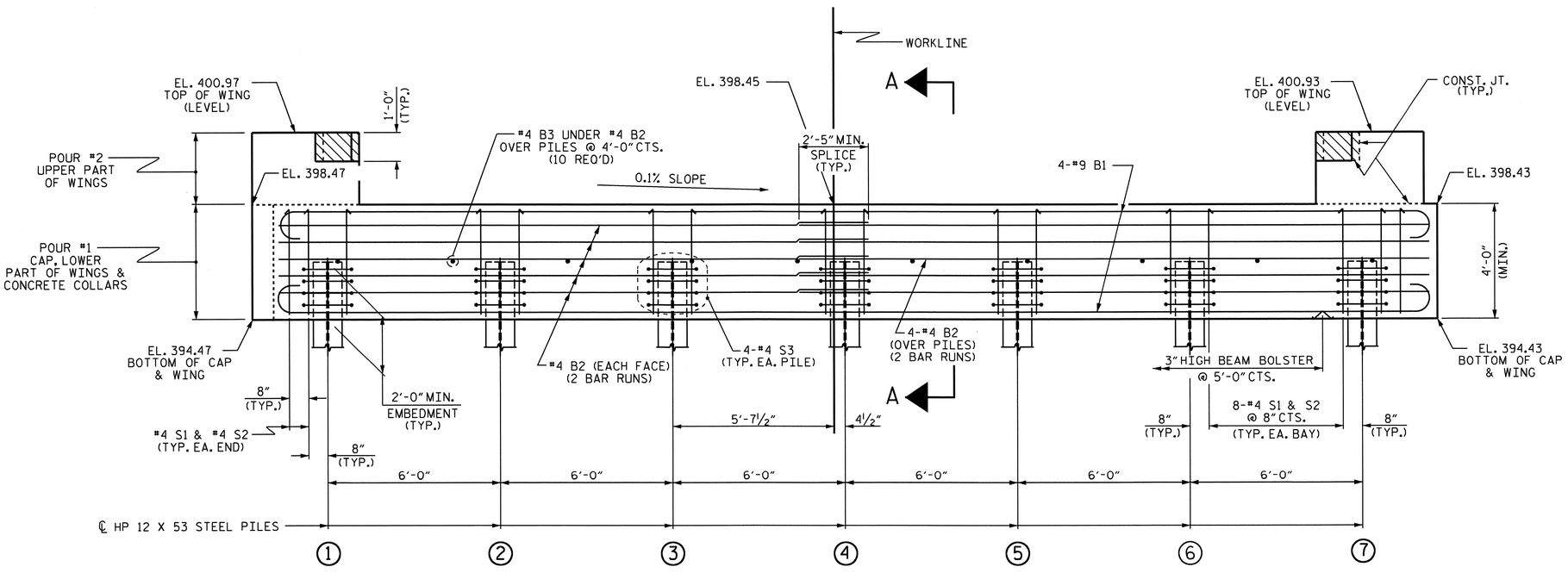

ELEVATION

WINGS NOT SHOWN FOR CLARITY.
FOR SECTION A-A, SEE SHEET 4 OF 4.
CONCRETE COLLARS FOR STEEL PILES NOT SHOWN IN PLAN AND ELEVATION VIEWS FOR CLARITY.
SEE "CORROSION PROTECTION FOR STEEL PILES DETAIL", SHEET 4 OF 4.

NOTES

STIRRUPS IN CAP MAY BE SHIFTED AS NECESSARY TO CLEAR DOWELS.

THE CONCRETE IN THE SHADED AREA OF THE WING SHALL BE POURED AFTER THE VERTICAL CONCRETE BARRIER RAIL IS CAST IF SLIP FORMING IS USED.

FOR PILE SPLICE DETAILS, SEE SHEET 4 OF 4.

FOR WING DETAILS, SEE SHEET 3 OF 4.

TOP OF PILE ELEVATIONS	
1	396.47
2	396.46
3	396.46
4	396.45
5	396.44
6	396.44
7	396.43

PROJECT NO. BD-5105P
GRANVILLE COUNTY
STATION: 14+83.00 -L-

SHEET 1 OF 4

STATE OF NORTH CAROLINA
DEPARTMENT OF TRANSPORTATION
RALEIGH

SUBSTRUCTURE

END BENT No. 1

NORTH CAROLINA PROFESSIONAL SEAL 030341 ENGINEER KRISTY W. ALFORD

REVISIONS							SHEET NO.
NO.	BY:	DATE:	NO.	BY:	DATE:		S-10
1			3				TOTAL SHEETS
2			4				19

ASSEMBLED BY :	A.C. OUTLAW	DATE :	4/26/12
CHECKED BY :	Fr. Lea	DATE :	6/22/12
DRAWN BY :	WJH	12/11	
CHECKED BY :	AAC	12/11	

30-AUG-2012 12:42
S:\DPG2\KRISTY\DivisionProjects\BD5105P\Drafting\Substructure\BD5105P_SD_E*_01.dgn
kalford

STD. NO. EB_33_75S4

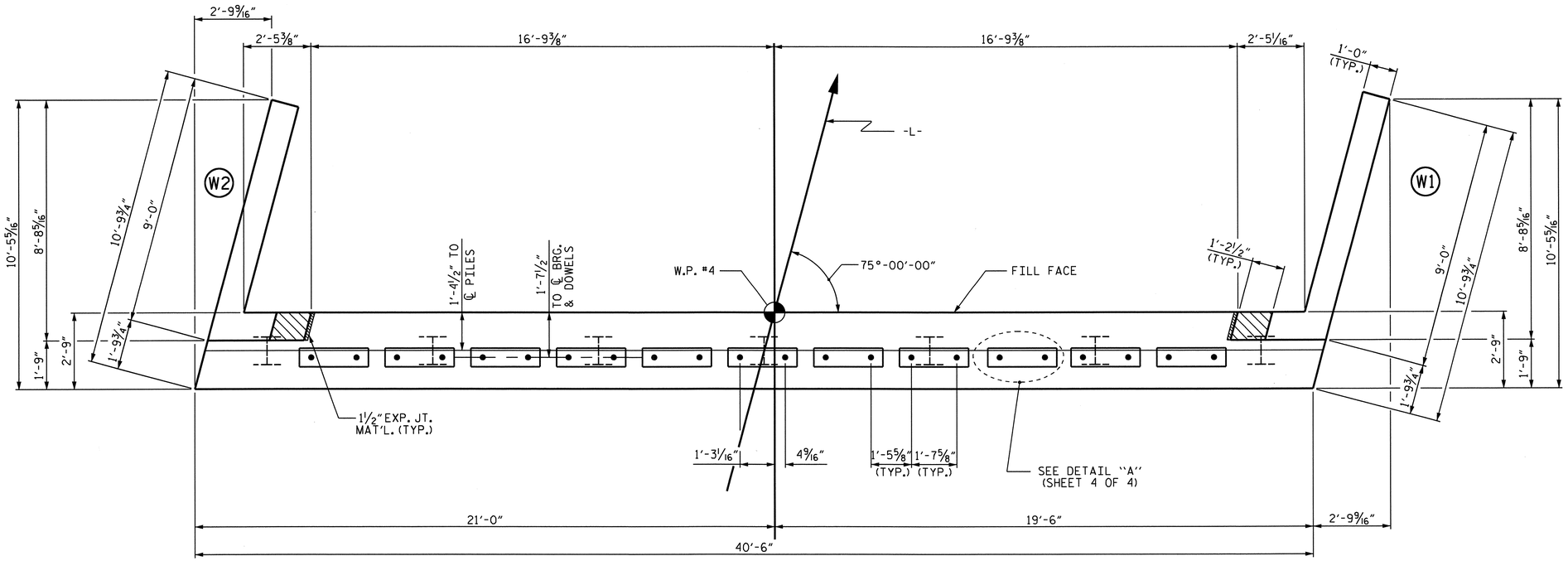

PLAN

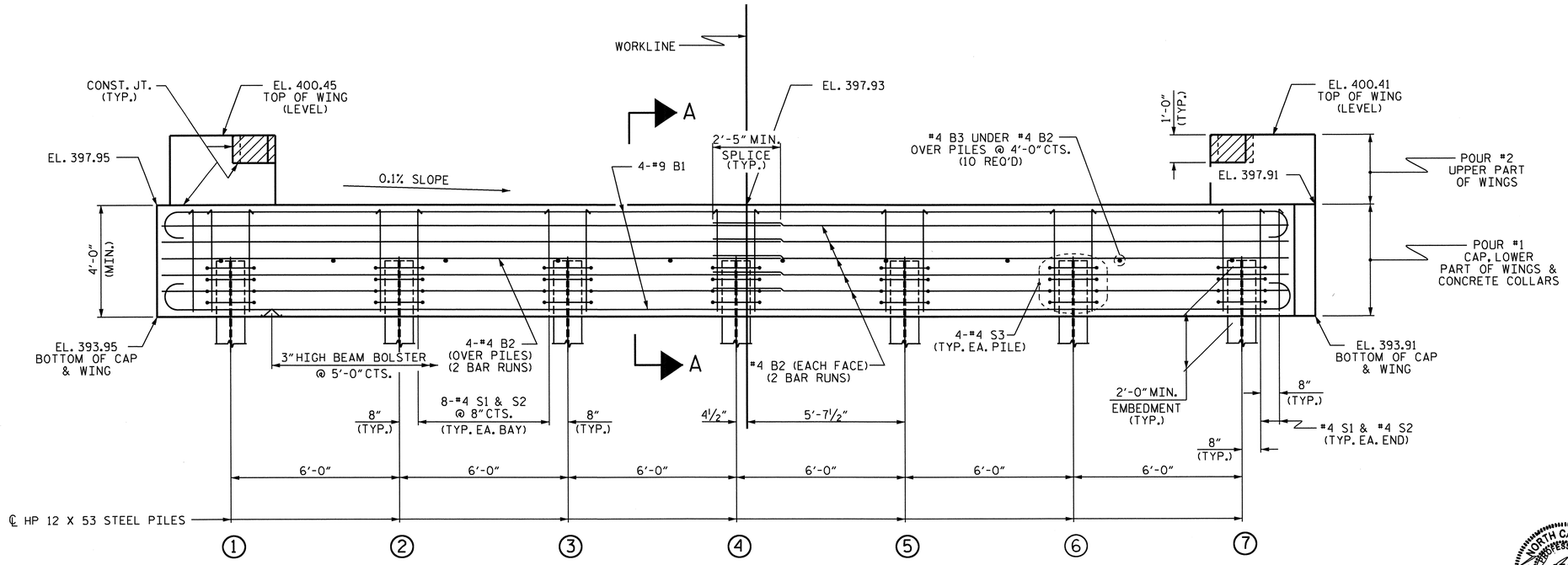

ELEVATION

WINGS NOT SHOWN FOR CLARITY.
FOR SECTION A-A, SEE SHEET 4 OF 4.
CONCRETE COLLARS FOR STEEL PILES NOT SHOWN IN PLAN AND ELEVATION VIEWS FOR CLARITY.
SEE "CORROSION PROTECTION FOR STEEL PILES DETAIL", SHEET 4 OF 4.

NOTES

STIRRUPS IN CAP MAY BE SHIFTED AS NECESSARY TO CLEAR DOWELS.

THE CONCRETE IN THE SHADED AREA OF THE WING SHALL BE POURED AFTER THE VERTICAL CONCRETE BARRIER RAIL IS CAST IF SLIP FORMING IS USED.

FOR PILE SPLICE DETAILS, SEE SHEET 4 OF 4.

FOR WING DETAILS, SEE SHEET 3 OF 4.

TOP OF PILE ELEVATIONS

1	395.95
2	395.94
3	395.94
4	395.93
5	395.93
6	395.92
7	395.91

PROJECT NO. BD-5105P
GRANVILLE COUNTY
STATION: 14+83.00 -L-

SHEET 2 OF 4

STATE OF NORTH CAROLINA
DEPARTMENT OF TRANSPORTATION
RALEIGH

SUBSTRUCTURE
END BENT No. 2

NORTH CAROLINA PROFESSIONAL SEAL 029441 ENGINEER KRISTY W. ALFORD

ASSEMBLED BY :	A.C. OUTLAW	DATE :	4/26/12
CHECKED BY :	Fr. Lea	DATE :	6/22/12
DRAWN BY :	WJH	12/11	
CHECKED BY :	AAC	12/11	

REVISIONS								SHEET NO.
NO.	BY:	DATE:	NO.	BY:	DATE:			S-11
1			3					TOTAL SHEETS
2			4					19

30-AUG-2012 12:42
S:\DPG2\KRISTY\DivisionProjects\BD5105P\Drafting\Substructure\BD5105P_SD_E*_01.dgn
kalford

STD. NO. EB_33_75S4

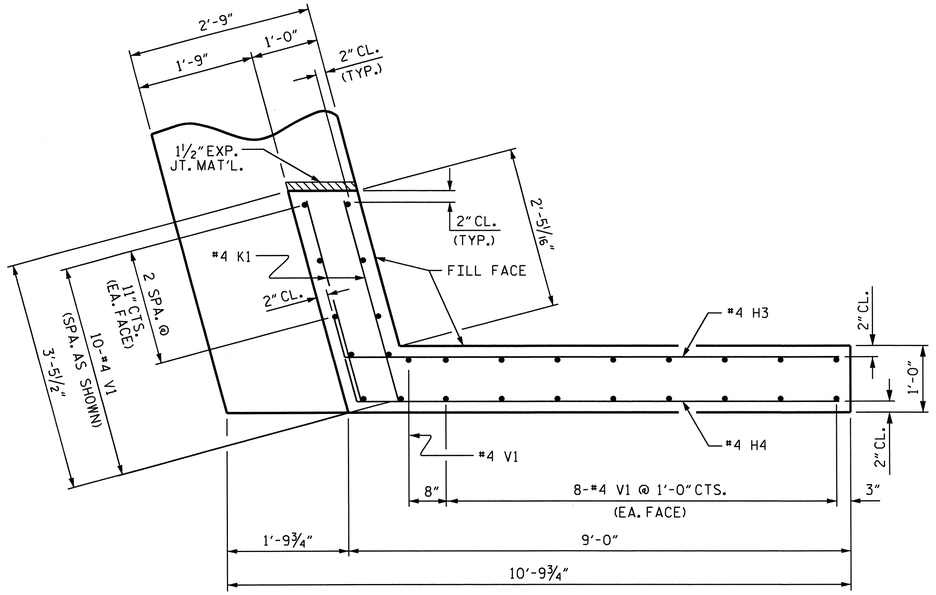

PLAN OF WING (W1)

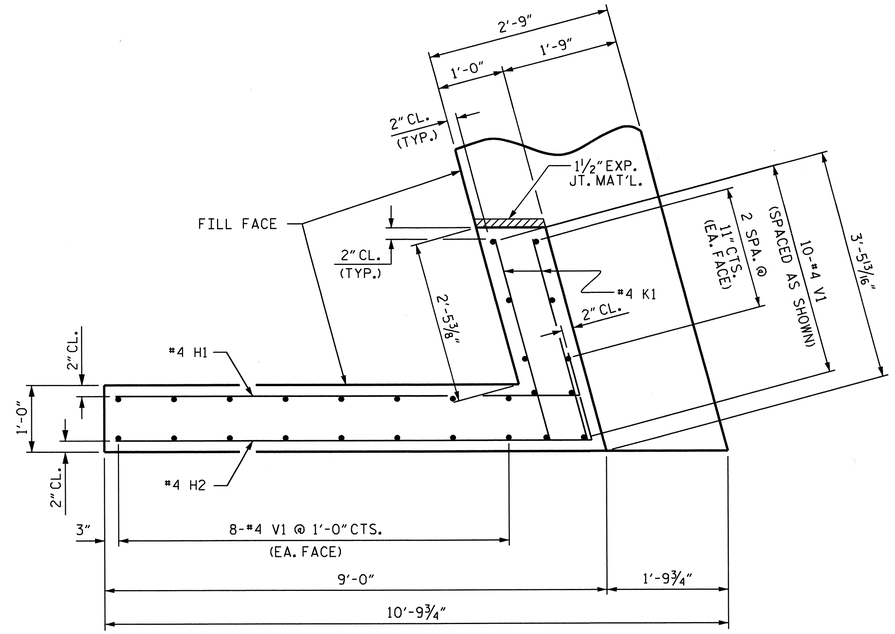

PLAN OF WING (W2)

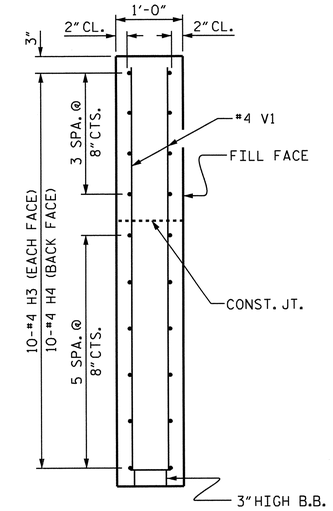

SECTION X-X

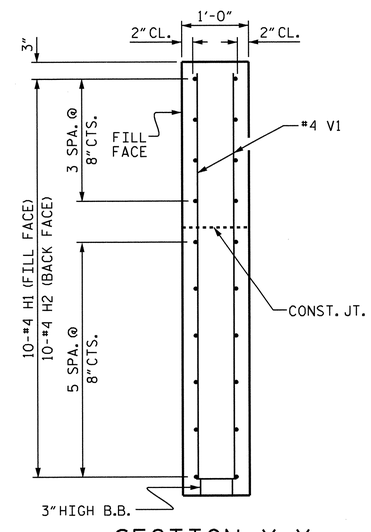

SECTION Y-Y

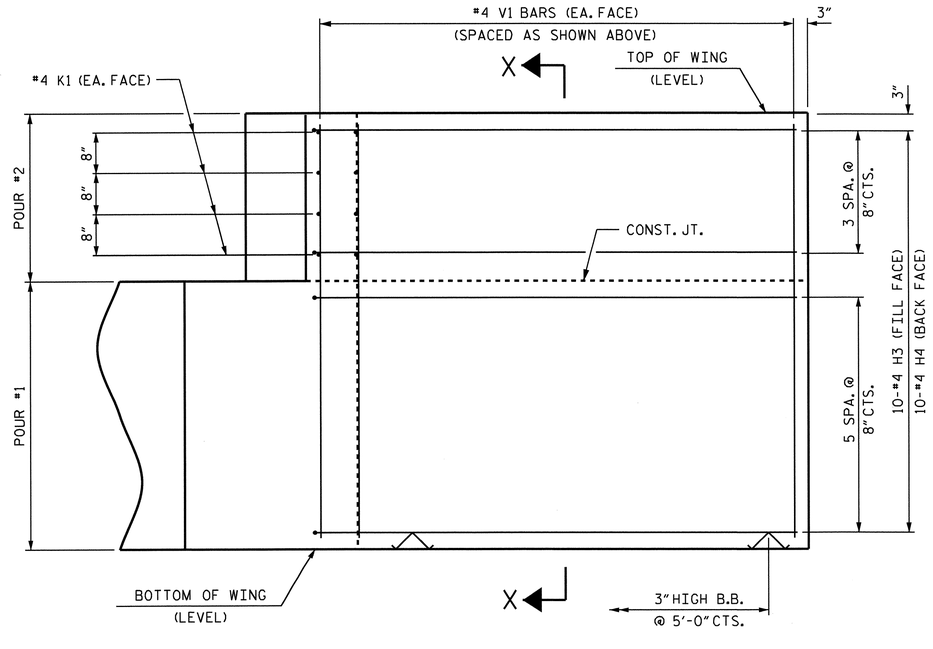

ELEVATION OF WING (W1)

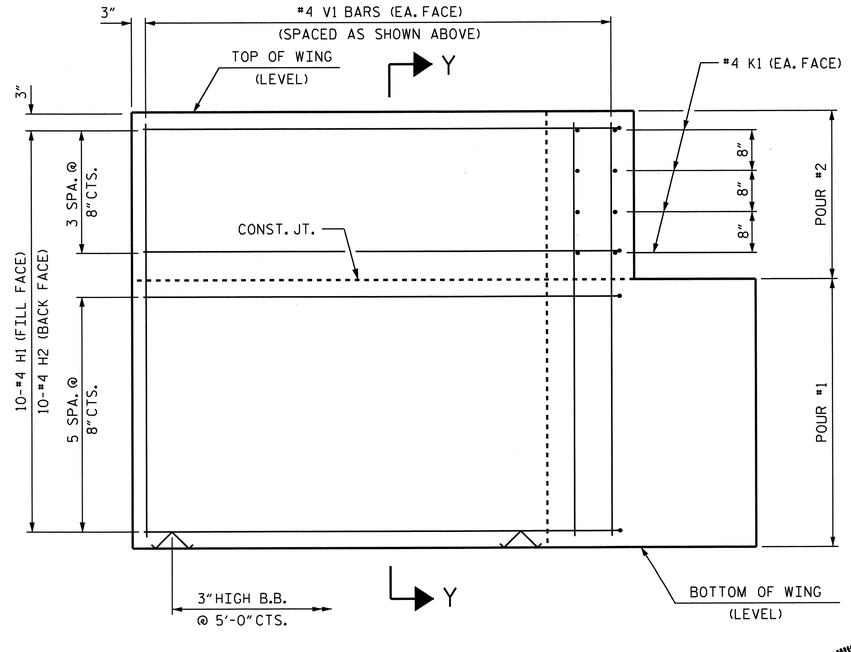

ELEVATION OF WING (W2)

WING DETAILS

PROJECT NO. BD-5105P
GRANVILLE COUNTY
STATION: 14+83.00 -L-

SHEET 3 OF 4

STATE OF NORTH CAROLINA
DEPARTMENT OF TRANSPORTATION
RALEIGH

SUBSTRUCTURE
END BENT
WING DETAILS

REVISIONS							SHEET NO.
NO.	BY:	DATE:	NO.	BY:	DATE:		S-12
1			3				TOTAL SHEETS
2			4				19

NORTH CAROLINA PROFESSIONAL SEAL 025441 ENGINEER KRISTY W. ALFORD

ASSEMBLED BY :	A.C. OUTLAW	DATE :	4/26/12
CHECKED BY :	Fr. Lee	DATE :	6/22/12
DRAWN BY :	WJH	12/11	
CHECKED BY :	AAC	12/11	

30-AUG-2012 12:42
S:\DPG2\KRISTY\DivisionProjects\BD5105P\Drafting\Substructure\BD5105P_SD_E*_01.dgn
kalford

STD. NO. EB_33_75S4

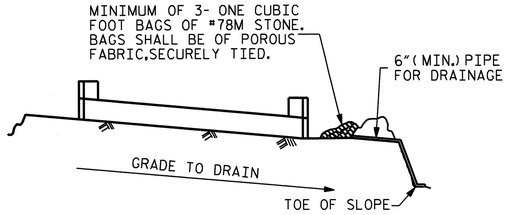

BAGGED STONE AND PIPE SHALL BE PLACED IMMEDIATELY AFTER COMPLETION OF END BENT EXCAVATION. PIPE MAY BE EITHER CONCRETE, CORRUGATED STEEL, CORRUGATED ALUMINUM ALLOY, OR CORRUGATED PLASTIC. PERFORATED PIPE WILL NOT BE ALLOWED.

BAGGED STONE SHALL REMAIN IN PLACE UNTIL THE ENGINEER DIRECTS THAT IT BE REMOVED. THE CONTRACTOR SHALL REMOVE AND DISPOSE OF SILT ACCUMULATIONS AT BAGGED STONE WHEN SO DIRECTED BY THE ENGINEER. BAGS SHALL BE REMOVED AND REPLACED WHENEVER THE ENGINEER DETERMINES THAT THEY HAVE DETERIORATED AND LOST THEIR EFFECTIVENESS.

NO SEPARATE PAYMENT WILL BE MADE FOR THIS WORK AND THE ENTIRE COST OF THIS WORK SHALL BE INCLUDED IN THE UNIT CONTRACT PRICE BID FOR THE SEVERAL PAY ITEMS.

TEMPORARY DRAINAGE AT END BENT

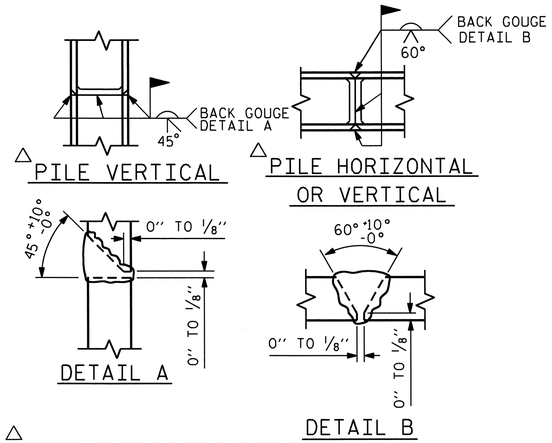

△ POSITION OF PILE DURING WELDING.

PILE SPLICE DETAILS

BAR TYPES

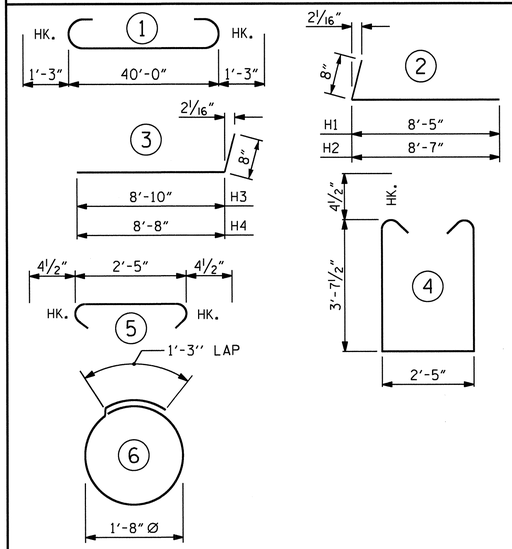

ALL BAR DIMENSIONS ARE OUT TO OUT.

END BENT No. 1	END BENT No. 2
HP 12 X 53 STEEL PILES	HP 12 X 53 STEEL PILES
NO: 7 LIN. FT.= 105	NO: 7 LIN. FT.= 175
STEEL PILE POINTS 7 EACH	STEEL PILE POINTS 7 EACH

BILL OF MATERIAL FOR ONE END BENT

BAR	NO.	SIZE	TYPE	LENGTH	WEIGHT
B1	8	#9	1	42'-6"	1156
B2	28	#4	STR	21'-4"	399
B3	10	#4	STR	2'-5"	16
D1	22	#6	STR	1'-6"	50
H1	10	#4	2	9'-1"	61
H2	10	#4	2	9'-3"	62
H3	10	#4	3	9'-6"	63
H4	10	#4	3	9'-4"	62
K1	16	#4	STR	3'-1"	33
S1	52	#4	4	10'-5"	362
S2	52	#4	5	3'-2"	110
S3	28	#4	6	6'-6"	122
V1	53	#4	STR	6'-2"	218

REINFORCING STEEL (FOR ONE END BENT) 2714 LBS.

CLASS A CONCRETE BREAKDOWN (FOR ONE END BENT)

POUR #1 CAP, LOWER PART OF WINGS & COLLARS 20.1 C.Y.

POUR #2 UPPER PART OF WINGS 2.1 C.Y.

TOTAL CLASS A CONCRETE 22.2 C.Y.

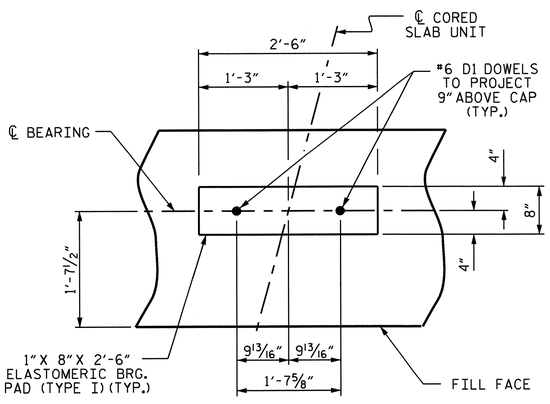

DETAIL "A"

(END BENT No. 1 SHOWN, END BENT No. 2 SIMILAR BY ROTATION)

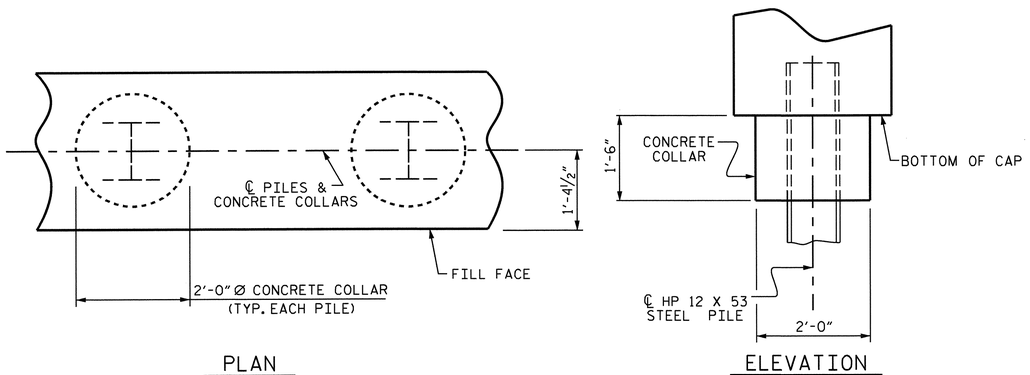

PLAN

ELEVATION

CORROSION PROTECTION FOR STEEL PILES DETAIL

(END BENT No. 1 SHOWN, END BENT No. 2 SIMILAR BY ROTATION)

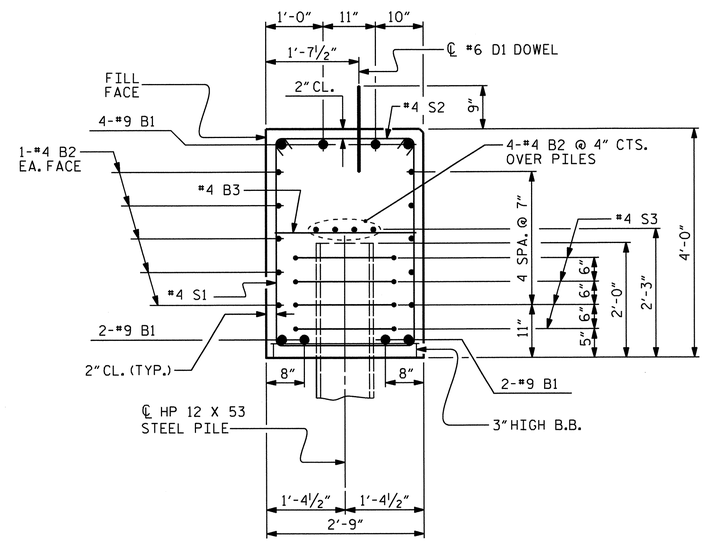

SECTION A-A

(CONCRETE COLLAR NOT SHOWN FOR CLARITY. SEE "CORROSION PROTECTION FOR STEEL PILES DETAIL.")

PROJECT NO. BD-5105P

GRANVILLE COUNTY

STATION: 14+83.00 -L-

SHEET 4 OF 4

STATE OF NORTH CAROLINA
DEPARTMENT OF TRANSPORTATION
RALEIGH

SUBSTRUCTURE

END BENT No. 1 & 2 DETAILS

NORTH CAROLINA PROFESSIONAL SEAL 029441 ENGINEER KRISTY W. ALFORD 9-30-12

REVISIONS								SHEET NO.
NO.	BY:	DATE:	NO.	BY:	DATE:			S-13
1			3					TOTAL SHEETS
2			4					19

ASSEMBLED BY :	A.C. OUTLAW	DATE :	4/26/12
CHECKED BY :	Fr. Lea	DATE :	6/22/12
DRAWN BY :	WJH	12/11	
CHECKED BY :	AAC	12/11	

30-AUG-2012 12:41
S:\DPG2\KRISTY\DivisionProjects\BD5105P\Drafting\Substructure\BD5105P_SD_E*_01.dgn
kalford

STD. NO. EB_33_75S4

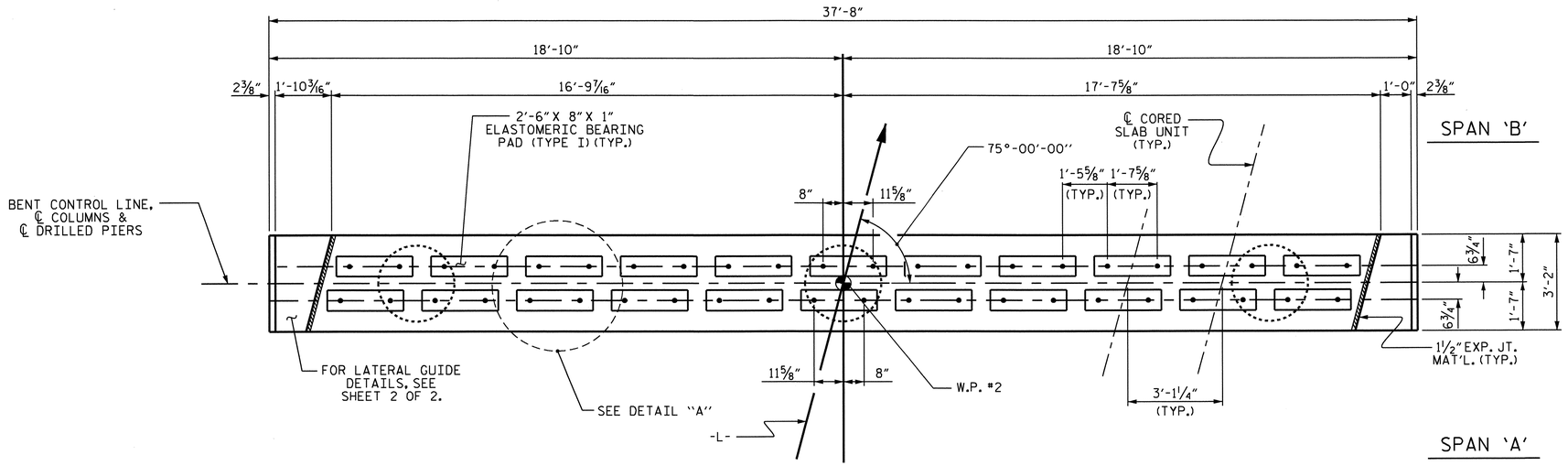

PLAN

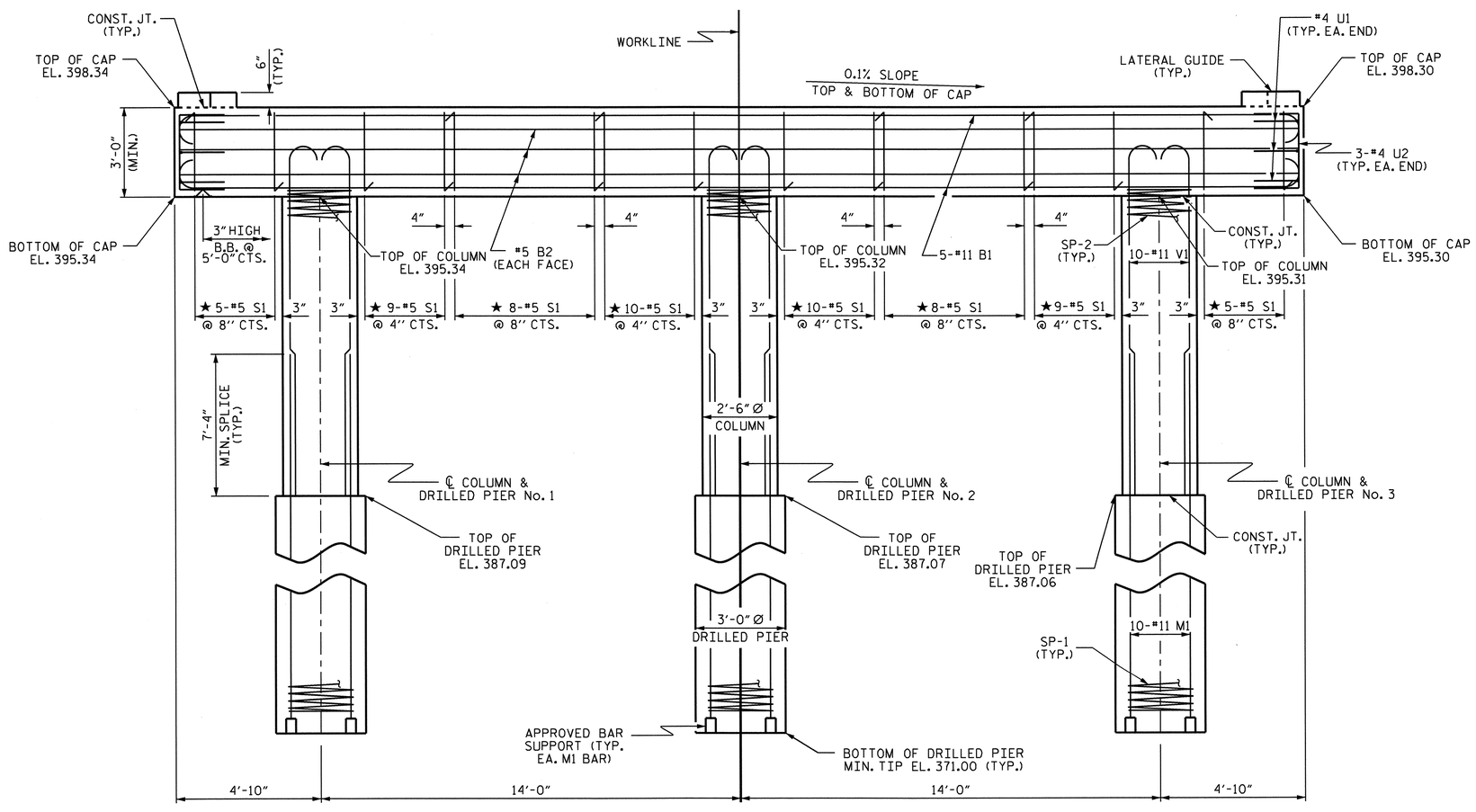

ELEVATION

DIMENSIONS & REINFORCING STEEL ARE TYPICAL FOR EACH COLUMN & DRILLED PIER UNLESS OTHERWISE NOTED.

NOTES

STIRRUPS IN CAP MAY BE SHIFTED AS NECESSARY TO CLEAR DOWELS.

HOOKS ON "V" BARS MAY BE TURNED AS NECESSARY FOR PLACING REINFORCING STEEL.

FOR DRILLED PIERS, SEE SECTION 411 OF THE STANDARD SPECIFICATIONS.

ALL STEEL IN THE DRILLED PIERS IS INCLUDED IN THE PAY ITEMS FOR "REINFORCING STEEL" AND "SPIRAL COLUMN REINFORCING STEEL."

THE LATERAL GUIDES ARE NOT TO BE POURED UNTIL AFTER THE CORED SLAB UNITS ARE IN PLACE.

★ INVERT ALTERNATE STIRRUPS.

THE LOCATION OF THE CONSTRUCTION JOINT IN THE DRILLED PIERS IS BASED ON AN APPROXIMATE GROUND LINE ELEVATION. IF THE CONSTRUCTION JOINT IS ABOVE THE ACTUAL GROUND LINE ELEVATION, THE CONTRACTOR SHALL PLACE THE CONSTRUCTION JOINT ONE FOOT BELOW THE GROUND LINE.

THE CONTRACTOR'S ATTENTION IS CALLED TO THE FACT THAT THE LONGITUDINAL REINFORCEMENT FOR DRILLED PIERS IS DETAILED WITH 3 FEET OF EXTRA LENGTH.

THE CONTRACTOR HAS THE OPTION TO OMIT THE LATERAL GUIDE IF APPROVED BY THE ENGINEER.

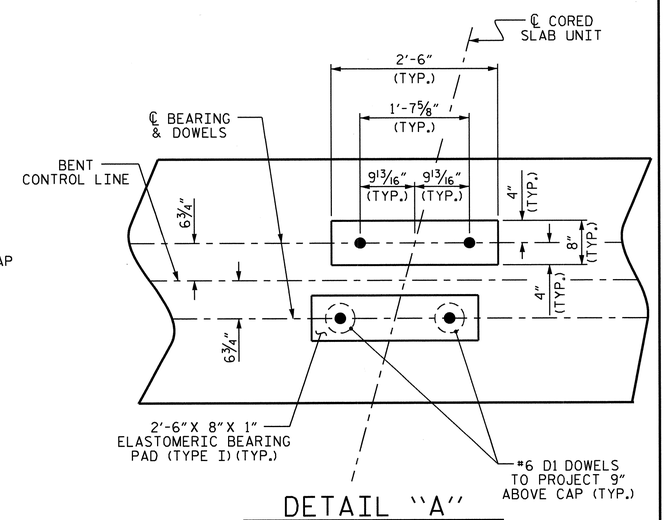

DETAIL "A"

(DIMENSIONS ARE TYPICAL EACH BEARING)

PROJECT NO. BD-5105P

GRANVILLE COUNTY

STATION: 14+83.00 -L-

SHEET 1 OF 2

STATE OF NORTH CAROLINA
DEPARTMENT OF TRANSPORTATION
RALEIGH

SUBSTRUCTURE

BENT No. 1

NORTH CAROLINA PROFESSIONAL SEAL 029441 ENGINEER KRISTY W. ALFORD

REVISIONS							
NO.	BY:	DATE:	NO.	BY:	DATE:		SHEET NO. S-14
1			3				TOTAL SHEETS 19
2			4				

ASSEMBLED BY :	A.C. OUTLAW	DATE :	5/09/12
CHECKED BY :	Fr. Lea	DATE :	6/25/12
DRAWN BY :	DGE	04/10	
CHECKED BY :	MKT	04/10	

30-AUG-2012 12:41
S:\DPG2\KRISTY\DivisionProjects\BD5105P\Drafting\Substructure\BD5105P_SD_B*_01.dgn
kalford

STD. NO. DP_BT_33_75S_<50'

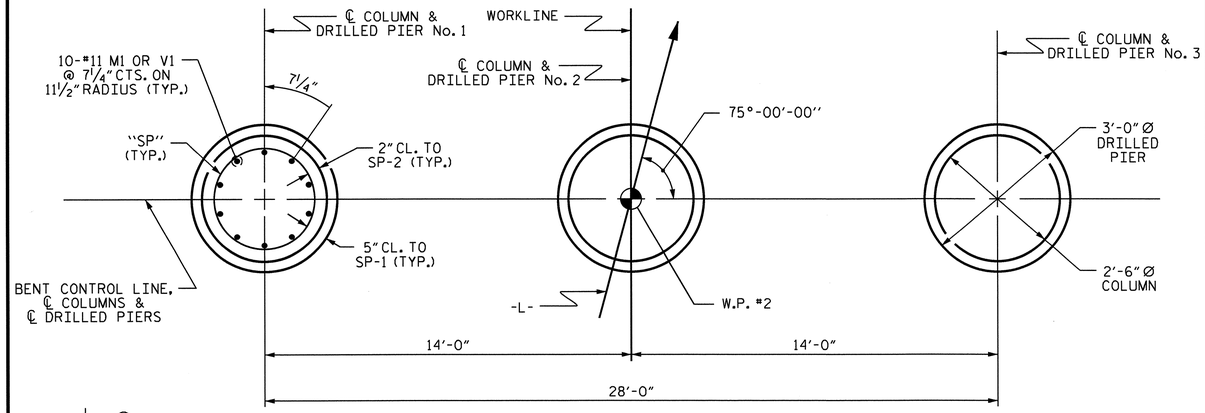

PLAN OF DRILLED PIERS & COLUMNS

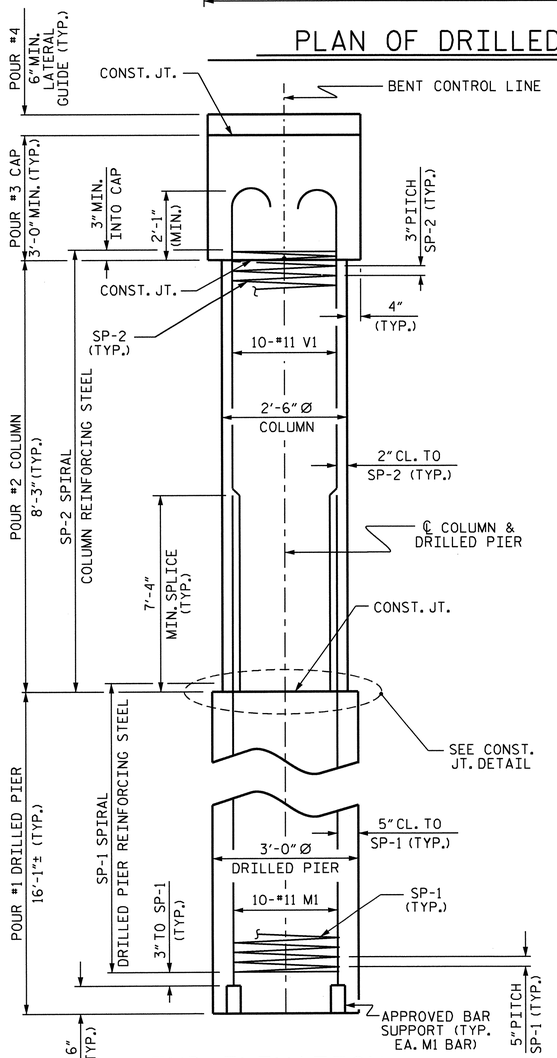

END ELEVATION

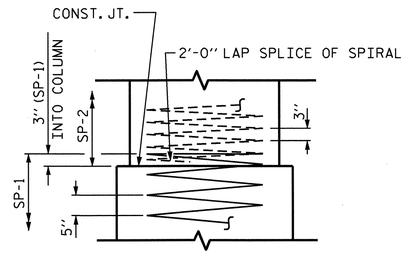

CONSTRUCTION JOINT DETAIL

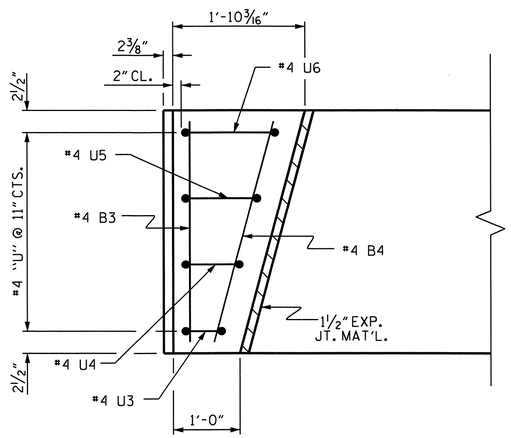

PLAN

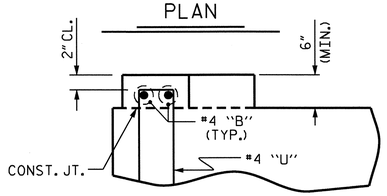

ELEVATION

LATERAL GUIDE DETAILS

(LEFT LATERAL GUIDE SHOWN, RIGHT SIDE SIMILAR)

BAR TYPES

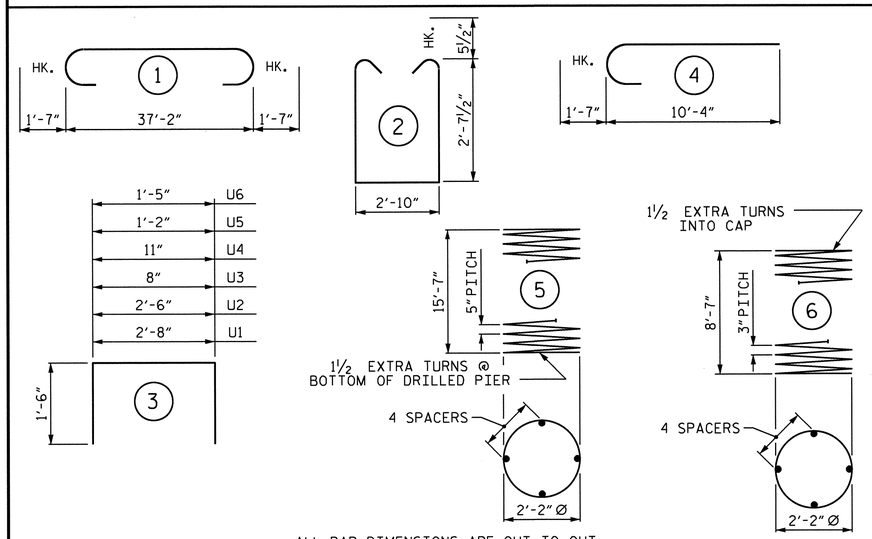

ALL BAR DIMENSIONS ARE OUT TO OUT

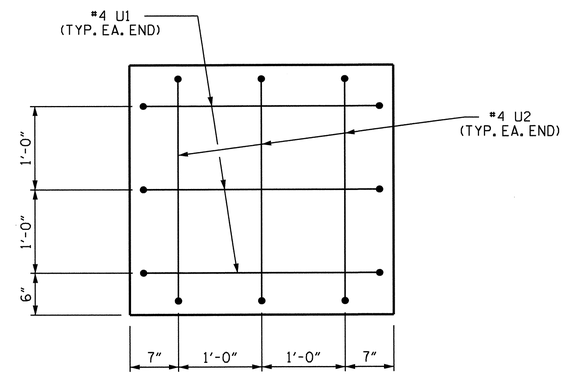

END OF CAP VIEW

(TYPICAL BOTH ENDS)

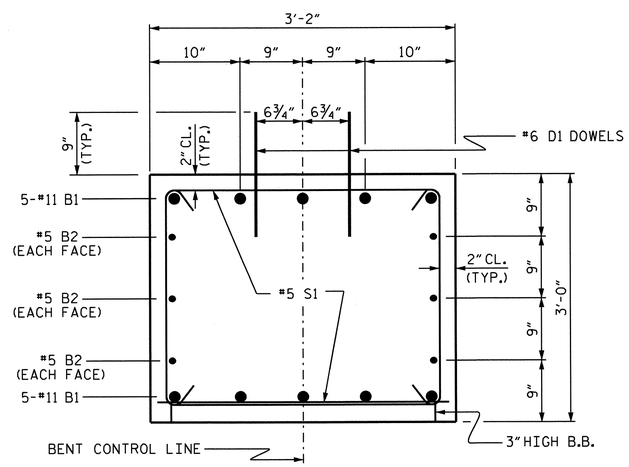

SECTION THRU CAP

BILL OF MATERIAL
FOR ONE BENT

BAR	NO.	SIZE	TYPE	LENGTH	WEIGHT
B1	10	#11	1	40'-4"	2143
B2	6	#5	STR	37'-4"	234
B3	2	#4	STR	2'-10"	4
B4	2	#4	STR	2'-11"	4
D1	44	#6	STR	1'-6"	99
M1	30	#11	STR	26'-2"	4170
S1	64	#5	2	9'-0"	601
U1	6	#4	3	5'-8"	23
U2	6	#4	3	5'-6"	22
U3	2	#4	3	3'-8"	5
U4	2	#4	3	3'-11"	5
U5	2	#4	3	4'-2"	6
U6	2	#4	3	4'-5"	6
V1	30	#11	4	11'-11"	1899

REINFORCING STEEL (FOR ONE BENT) 9221 LBS.

SP-1	3	*	5	259'-7"	812
SP-2	3	**	6	240'-6"	482

SPIRAL COLUMN REINFORCING STEEL (FOR ONE BENT) 1294 LBS.

* THE SP-1 SPIRAL REINFORCING STEEL SHALL BE W31 OR D-31 COLD DRAWN WIRE OR #5 PLAIN OR DEFORMED BAR

** THE SP-2 SPIRAL REINFORCING STEEL SHALL BE W20 OR D-20 COLD DRAWN WIRE OR #4 PLAIN OR DEFORMED BAR

CLASS A CONCRETE BREAKDOWN (FOR ONE BENT)

POUR #2 (COLUMNS)	4.5 C.Y.
POUR #3 (CAP)	13.3 C.Y.
POUR #4 (LATERAL GUIDE)	0.2 C.Y.
TOTAL CLASS A CONCRETE	18.0 C.Y.

DRILLED PIERS: (FOR ONE BENT)

DRILLED PIER CONCRETE POUR #1 (DRILLED PIERS)	12.6 C.Y.
3'-0" Ø DRILLED PIER	48.22 LIN. FT.
PERMANENT STEEL CASING FOR 3'-0" Ø DRILLED PIER	25 LIN. FT.
CSL TUBES	211 LIN. FT.

PROJECT NO. BD-5105P
GRANVILLE COUNTY
STATION: 14+83.00 -L-

SHEET 2 OF 2

STATE OF NORTH CAROLINA
DEPARTMENT OF TRANSPORTATION
RALEIGH

SUBSTRUCTURE
BENT No. 1

REVISIONS							SHEET NO.
NO.	BY:	DATE:	NO.	BY:	DATE:		S-15
1			3				TOTAL SHEETS
2			4				19

ASSEMBLED BY : A.C. OUTLAW DATE : 5/09/12
CHECKED BY : Fr. Leo DATE : 6/25/12
DRAWN BY : DGE 03/10
CHECKED BY : MKT 03/10

30-AUG-2012 12:41
S:\DPG2\KRISTY\DivisionProjects\BD5105P\Drafting\Substructure\BD5105P_SD_B*_01.dgn
kalford

STD. NO. DP_BT_33_75S_<50'

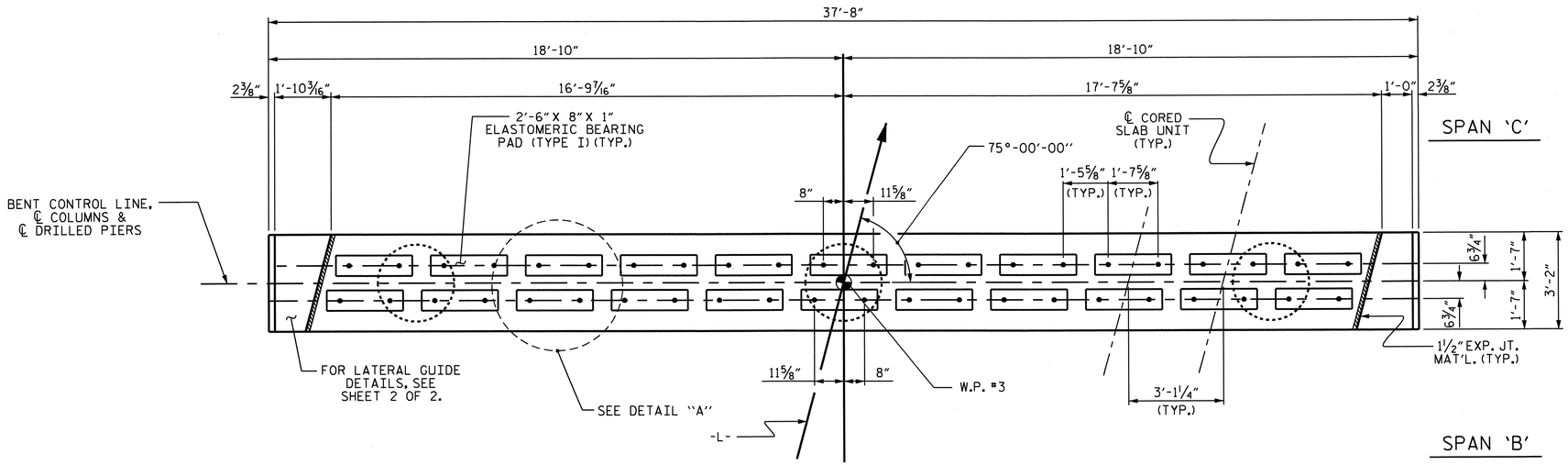

PLAN

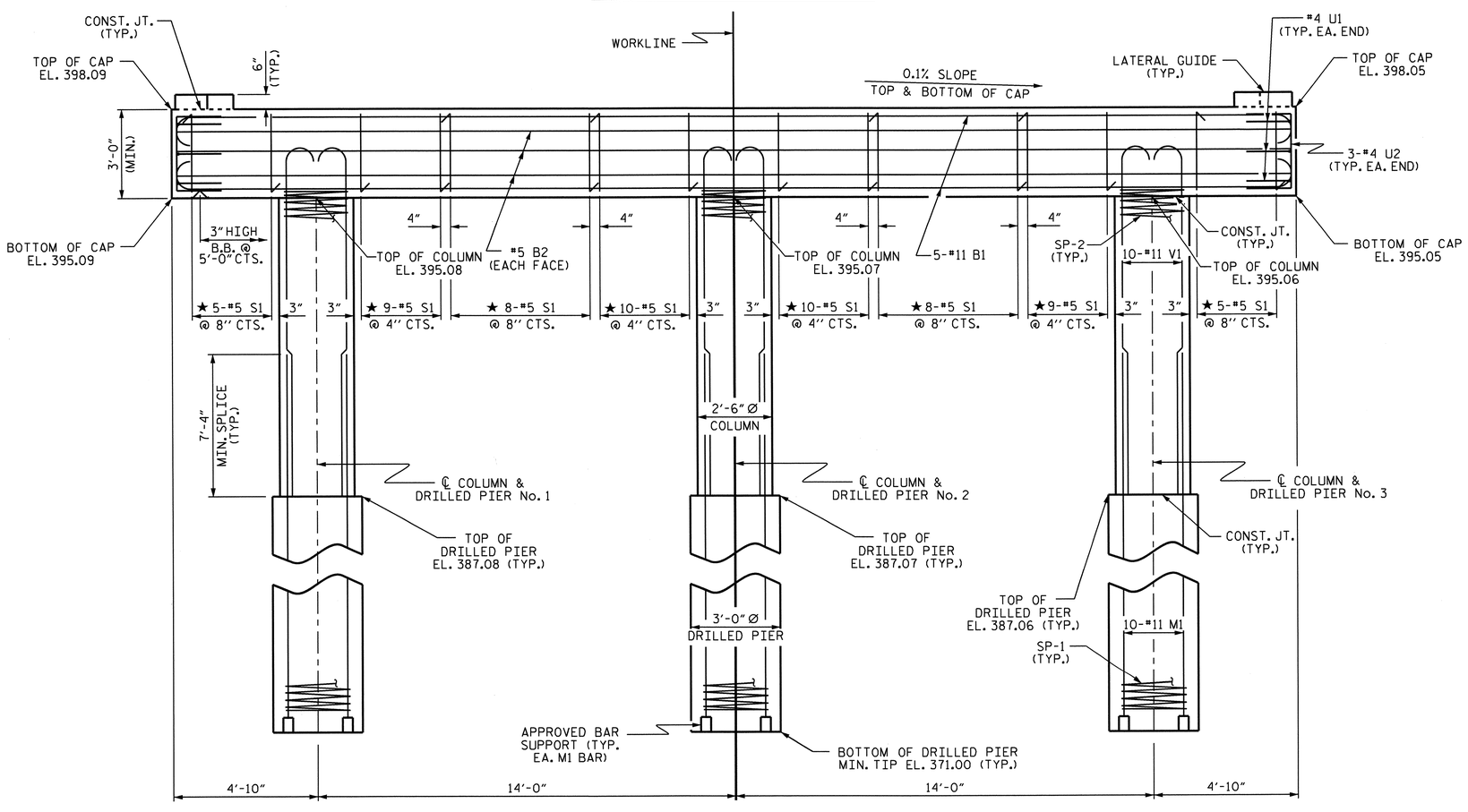

ELEVATION

DIMENSIONS & REINFORCING STEEL ARE TYPICAL FOR EACH COLUMN & DRILLED PIER UNLESS OTHERWISE NOTED.

NOTES

STIRRUPS IN CAP MAY BE SHIFTED AS NECESSARY TO CLEAR DOWELS.

HOOKS ON "V" BARS MAY BE TURNED AS NECESSARY FOR PLACING REINFORCING STEEL.

FOR DRILLED PIERS, SEE SECTION 411 OF THE STANDARD SPECIFICATIONS.

ALL STEEL IN THE DRILLED PIERS IS INCLUDED IN THE PAY ITEMS FOR "REINFORCING STEEL" AND "SPIRAL COLUMN REINFORCING STEEL."

THE LATERAL GUIDES ARE NOT TO BE POURED UNTIL AFTER THE CORED SLAB UNITS ARE IN PLACE.

★ INVERT ALTERNATE STIRRUPS.

THE LOCATION OF THE CONSTRUCTION JOINT IN THE DRILLED PIERS IS BASED ON AN APPROXIMATE GROUND LINE ELEVATION. IF THE CONSTRUCTION JOINT IS ABOVE THE ACTUAL GROUND LINE ELEVATION, THE CONTRACTOR SHALL PLACE THE CONSTRUCTION JOINT ONE FOOT BELOW THE GROUND LINE.

THE CONTRACTOR'S ATTENTION IS CALLED TO THE FACT THAT THE LONGITUDINAL REINFORCEMENT FOR DRILLED PIERS IS DETAILED WITH 3 FEET OF EXTRA LENGTH.

THE CONTRACTOR HAS THE OPTION TO OMIT THE LATERAL GUIDE IF APPROVED BY THE ENGINEER.

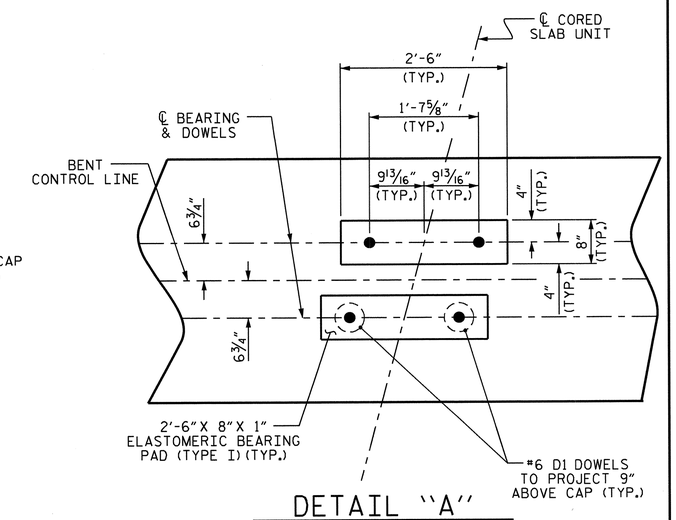

DETAIL "A"

(DIMENSIONS ARE TYPICAL EACH BEARING)

PROJECT NO. BD-5105P

GRANVILLE COUNTY

STATION: 14+83.00 -L-

SHEET 1 OF 2

STATE OF NORTH CAROLINA
DEPARTMENT OF TRANSPORTATION
RALEIGH

SUBSTRUCTURE

BENT No. 2

NORTH CAROLINA PROFESSIONAL SEAL 026441 ENGINEER KRISTY W. ALFORD

REVISIONS						SHEET NO.
NO.	BY:	DATE:	NO.	BY:	DATE:	S-16
1			3			TOTAL SHEETS
2			4			19

ASSEMBLED BY :	A.C. OUTLAW	DATE :	5/09/12
CHECKED BY :	Fr. Lea	DATE :	6/25/12
DRAWN BY :	DGE	04/10	
CHECKED BY :	MKT	04/10	

30-AUG-2012 12:41
S:\DPG2\KRISTY\DivisionProjects\BD5105P\Drafting\Substructure\BD5105P_SD_B*_01.dgn
kalford

STD. NO. DP_BT_33_75S_<50'

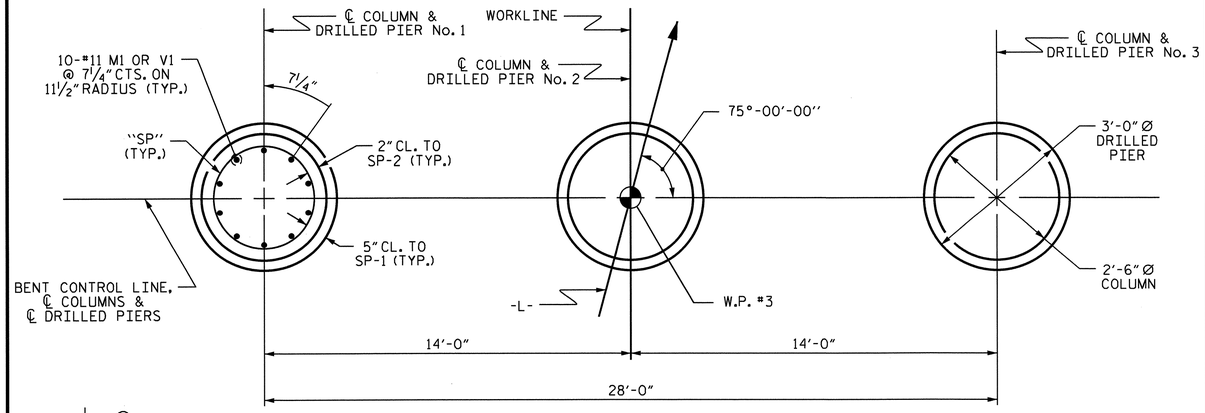

PLAN OF DRILLED PIERS & COLUMNS

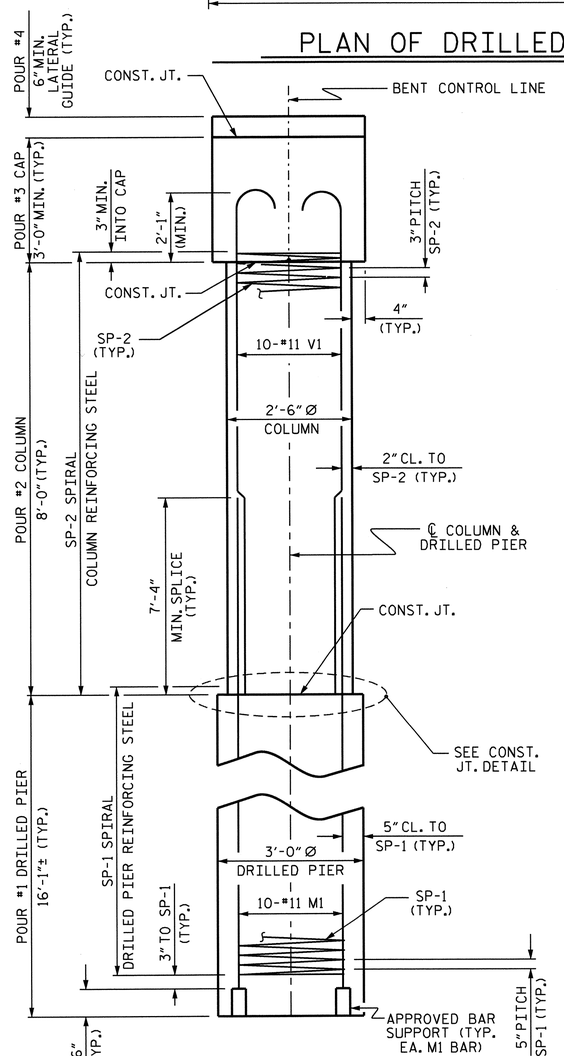

END ELEVATION

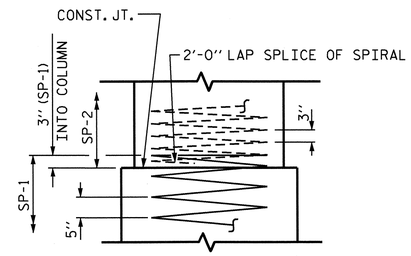

CONSTRUCTION JOINT DETAIL

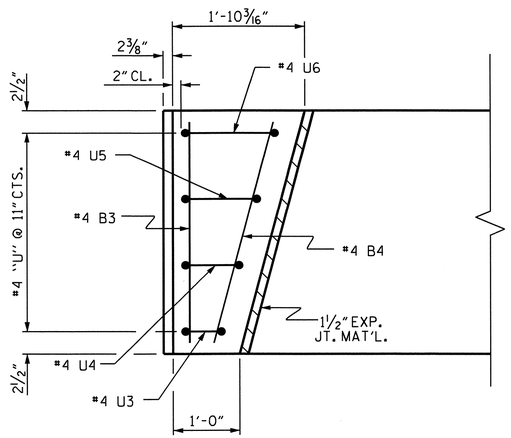

PLAN

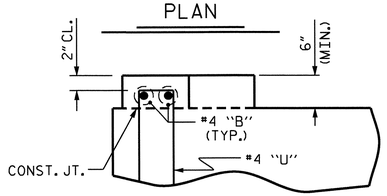

ELEVATION

LATERAL GUIDE DETAILS

(LEFT LATERAL GUIDE SHOWN, RIGHT SIDE SIMILAR)

BAR TYPES

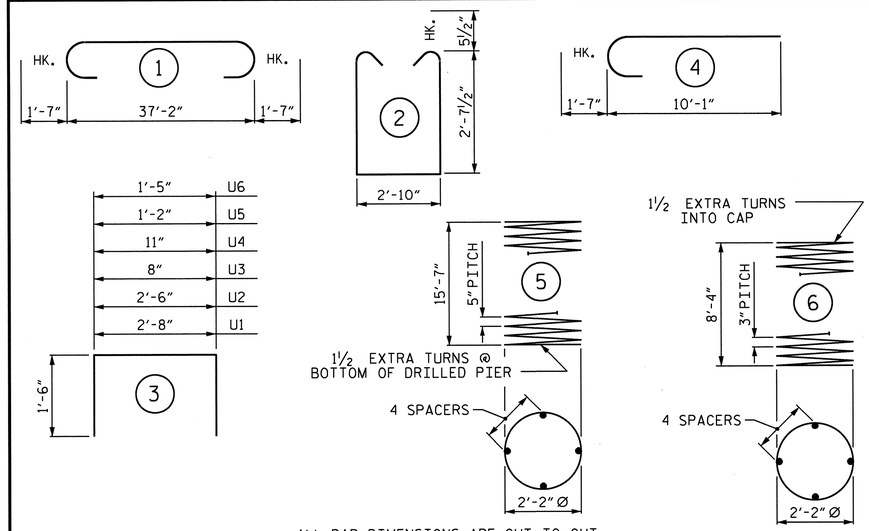

ALL BAR DIMENSIONS ARE OUT TO OUT

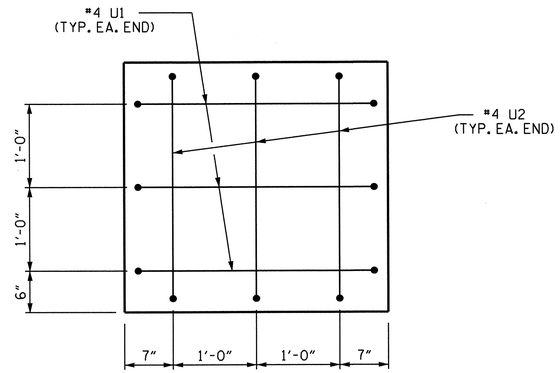

END OF CAP VIEW

(TYPICAL BOTH ENDS)

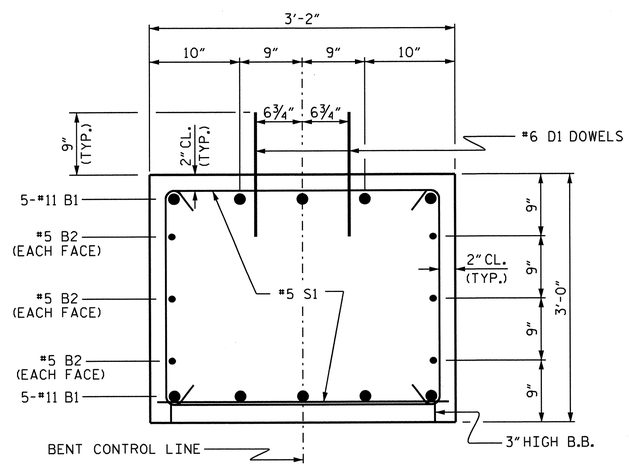

SECTION THRU CAP

BILL OF MATERIAL FOR ONE BENT

BAR	NO.	SIZE	TYPE	LENGTH	WEIGHT
B1	10	#11	1	40'-4"	2143
B2	6	#5	STR	37'-4"	234
B3	2	#4	STR	2'-10"	4
B4	2	#4	STR	2'-11"	4
D1	44	#6	STR	1'-6"	99
M1	30	#11	STR	26'-2"	4171
S1	64	#5	2	9'-0"	601
U1	6	#4	3	5'-8"	23
U2	6	#4	3	5'-6"	22
U3	2	#4	3	3'-8"	5
U4	2	#4	3	3'-11"	5
U5	2	#4	3	4'-2"	6
U6	2	#4	3	4'-5"	6
V1	30	#11	4	11'-8"	1860

REINFORCING STEEL (FOR ONE BENT) 9183 LBS.

SP-1	3	*	5	259'-7"	812
SP-2	3	**	6	233'-10"	467

SPIRAL COLUMN REINFORCING STEEL (FOR ONE BENT) 1279 LBS.

* THE SP-1 SPIRAL REINFORCING STEEL SHALL BE W31 OR D-31 COLD DRAWN WIRE OR #5 PLAIN OR DEFORMED BAR

** THE SP-2 SPIRAL REINFORCING STEEL SHALL BE W20 OR D-20 COLD DRAWN WIRE OR #4 PLAIN OR DEFORMED BAR

CLASS A CONCRETE BREAKDOWN (FOR ONE BENT)

POUR #2 (COLUMNS)	4.4 C.Y.
POUR #3 (CAP)	13.3 C.Y.
POUR #4 (LATERAL GUIDE)	0.2 C.Y.
TOTAL CLASS A CONCRETE	17.9 C.Y.

DRILLED PIERS: (FOR ONE BENT)

DRILLED PIER CONCRETE POUR #1 (DRILLED PIERS)	12.6 C.Y.
3'-0" Ø DRILLED PIER	48.21 LIN. FT.
PERMANENT STEEL CASING FOR 3'-0" Ø DRILLED PIER	24 LIN. FT.
CSL TUBES	210.8 LIN. FT.

PROJECT NO. BD-5105P
GRANVILLE COUNTY
STATION: 14+83.00 -L-

SHEET 2 OF 2

STATE OF NORTH CAROLINA
DEPARTMENT OF TRANSPORTATION
RALEIGH

SUBSTRUCTURE
BENT No. 2

NORTH CAROLINA PROFESSIONAL SEAL 029441 ENGINEER KRISTY W. ALFORD

ASSEMBLED BY : A.C. OUTLAW	DATE : 5/09/12		
CHECKED BY : Fr. Leo	DATE : 6/25/12		
DRAWN BY : DGE 03/10			
CHECKED BY : MKT 03/10			

REVISIONS						SHEET NO.
NO.	BY:	DATE:	NO.	BY:	DATE:	S-17
1			3			TOTAL SHEETS
2			4			19

30-AUG-2012 12:41
S:\DPG2\KRISTY\DivisionProjects\BD5105P\Drafting\Substructure\BD5105P_SD_B*_01.dgn
kalford

STD. NO. DP_BT_33_75S_<50'

NOTES :

FOR BERM WIDTH DIMENSIONS, SEE GENERAL DRAWING.

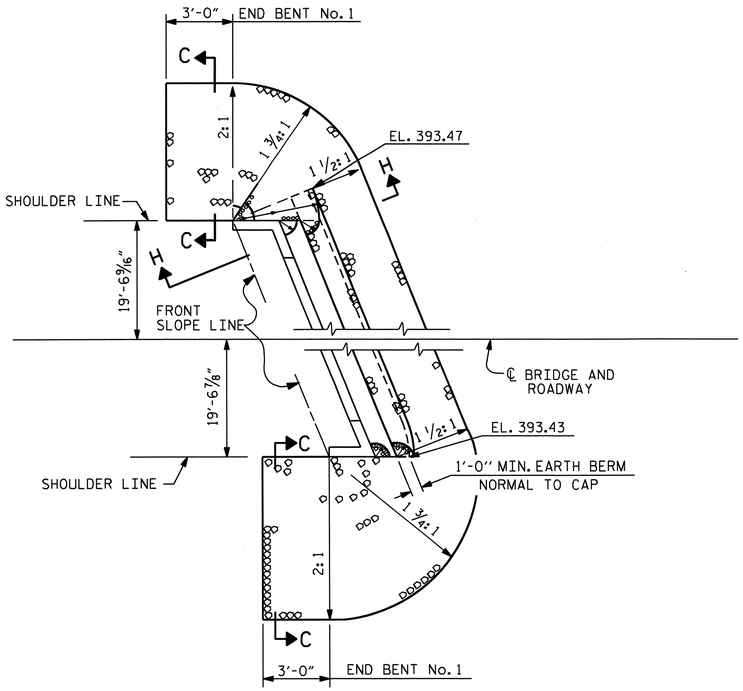

END BENT No. 1

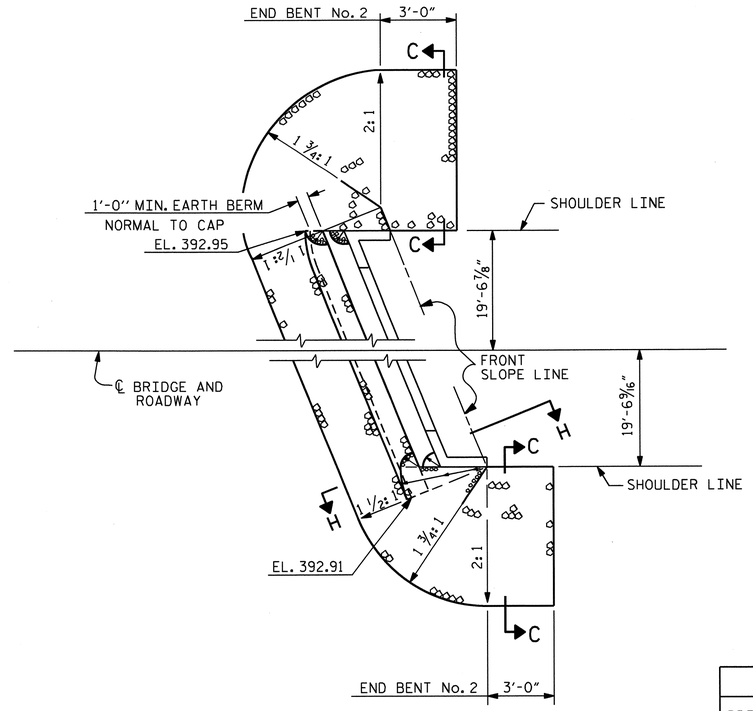

END BENT No. 2

ESTIMATED QUANTITIES		
BRIDGE @ STA. 14+83.00 -L-	RIP RAP CLASS II (2'-0" THICK)	GEOTEXTILE FOR DRAINAGE
	TONS	SQUARE YARDS
END BENT 1	157	175
END BENT 2	116	130

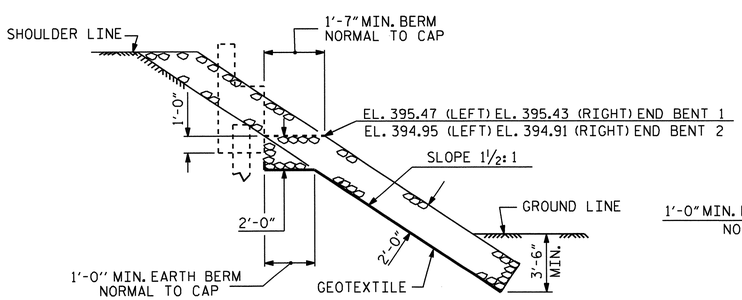

SECTION H-H

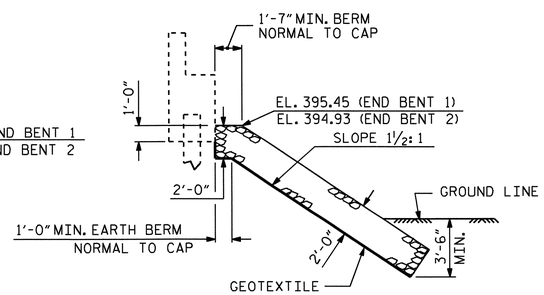

℄ SECTION
BERM RIP RAPPED

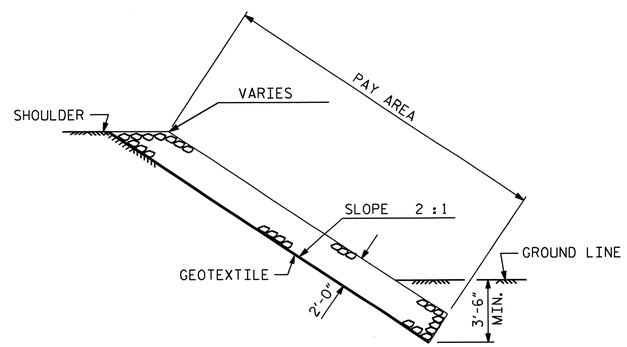

SECTION C-C

PROJECT NO. BD-5105P

GRANVILE COUNTY

STATION: 14+83.00 -L-

STATE OF NORTH CAROLINA
DEPARTMENT OF TRANSPORTATION
RALEIGH

STANDARD

RIP RAP DETAILS

REVISIONS								SHEET NO.
NO.	BY:	DATE:	NO.	BY:	DATE:			S-18
1			3					TOTAL SHEETS
2			4					19

ASSEMBLED BY :	A.C. OUTLAW	DATE :	4/26/12
CHECKED BY :	Fr. Lea	DATE :	6/25/12
DRAWN BY : REK 1/84	REV. 5/1/06R		TLA/GM
CHECKED BY : RDU 1/84	REV. 10/1/11		MAA/GM
	REV. 12/21/11		MAA/GM

30-AUG-2012 12:40
S:\DPG2\KRISTY\DivisionProjects\BD5105P\Drafting\Miscellaneous\BD5105P_SD_RR_01.dgn
kalford

STD. NO. RR1

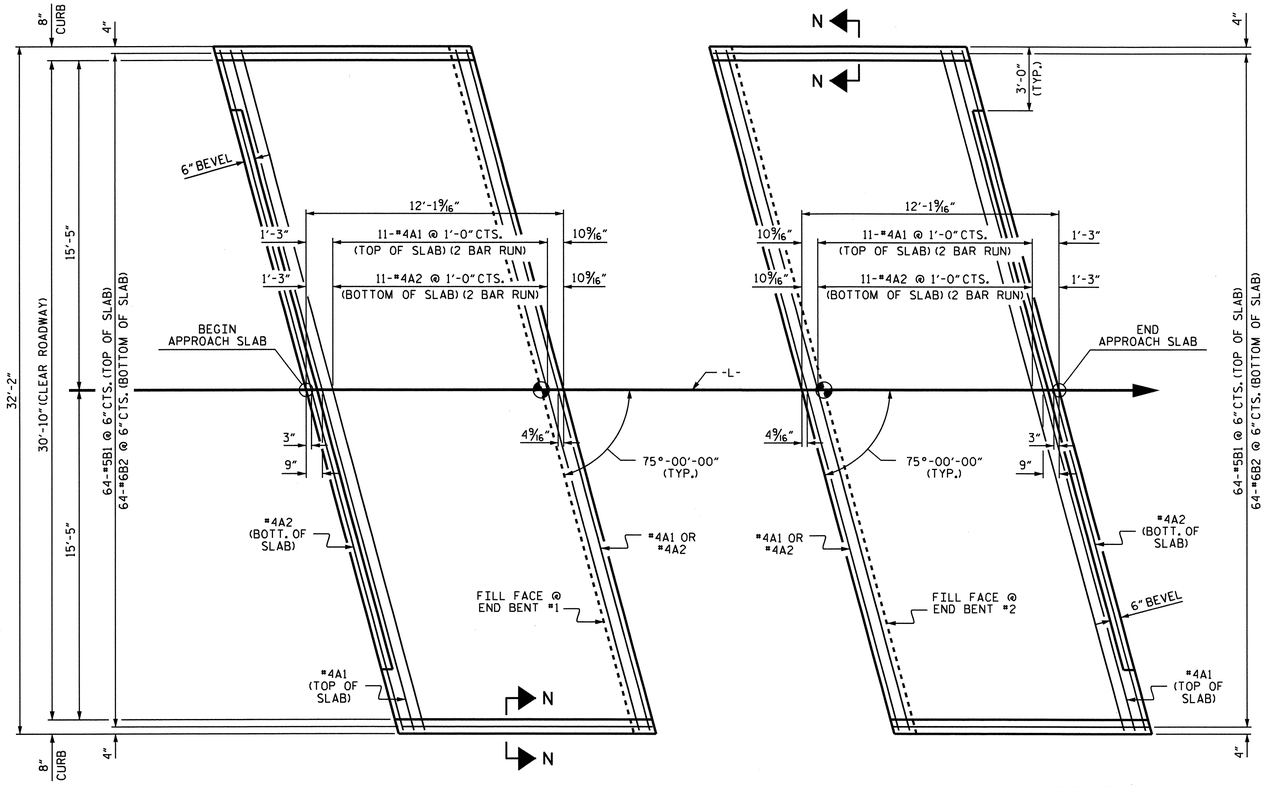

PLAN @ END BENT #1

PLAN @ END BENT #2

DIMENSIONS SHOWN ARE TYPICAL FOR BOTH APPROACH SLABS

NOTES

FOR BRIDGE APPROACH FILL INCLUDING GEOTEXTILE, 4" Ø DRAINAGE PIPE, AND #78M STONE BACKFILL, SEE ROADWAY PLANS.

GEOTEXTILE SHALL BE TYPE 1 IN ACCORDANCE WITH THE STANDARD SPECIFICATIONS SECTION 1056.

#78M STONE BACKFILL (CLASS V SELECT MATERIAL) SHALL BE IN ACCORDANCE WITH STANDARD SPECIFICATIONS SECTION 1016.

#78M STONE BACKFILL IS TO BE CONTINUOUS ALONG FILL FACE OF BACKWALL FROM OUTSIDE EDGE TO OUTSIDE EDGE OF APPROACH SLAB.

FOR THE 4" Ø DRAINAGE PIPE OUTLET(S), SEE ROADWAY STANDARD DRAWINGS.

AREA BETWEEN THE WINGWALL AND APPROACH SLAB SHALL BE GRADED TO DRAIN THE WATER AWAY FROM THE FILL FACE OF THE BRIDGE AND SHALL BE PAVED. SEE ROADWAY PLANS.

APPROACH SLAB GROOVING IS NOT REQUIRED.

BILL OF MATERIAL

APPROACH SLAB AT EB #1

BAR	NO.	SIZE	TYPE	LENGTH	WEIGHT
* A1	26	#4	STR	17'-6"	304
A2	26	#4	STR	17'-5"	302
* B1	64	#5	STR	11'-1"	740
B2	64	#6	STR	11'-7"	1113
REINFORCING STEEL				LBS.	1415
* EPOXY COATED REINFORCING STEEL				LBS.	1044
CLASS AA CONCRETE				C. Y.	18.7

APPROACH SLAB AT EB #2

BAR	NO.	SIZE	TYPE	LENGTH	WEIGHT
* A1	26	#4	STR	17'-6"	304
A2	26	#4	STR	17'-5"	302
* B1	64	#5	STR	11'-1"	740
B2	64	#6	STR	11'-7"	1113
REINFORCING STEEL				LBS.	1415
* EPOXY COATED REINFORCING STEEL				LBS.	1044
CLASS AA CONCRETE				C. Y.	18.7

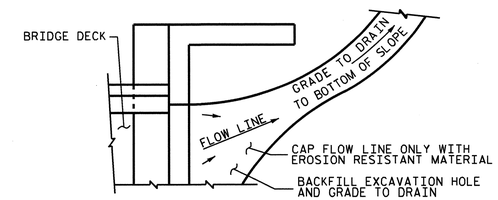

NOTE: IF THE APPROACH SLAB IS NOT CONSTRUCTED IMMEDIATELY AFTER THE BACKFILLING OF THE END BENT EXCAVATION, GRADE TO DRAIN TO THE BOTTOM OF THE SLOPE AND PROVIDE EROSION RESISTANT MATERIAL, SUCH AS FIBERGLASS ROVING OR AS DIRECTED BY THE ENGINEER TO PREVENT SOIL EROSION AND TO PROTECT THE AREA ADJACENT TO THE STRUCTURE. THE CONTRACTOR WILL BE REQUIRED TO REMOVE THESE MATERIALS PRIOR TO CONSTRUCTION OF THE APPROACH SLAB.

TEMPORARY DRAINAGE DETAIL

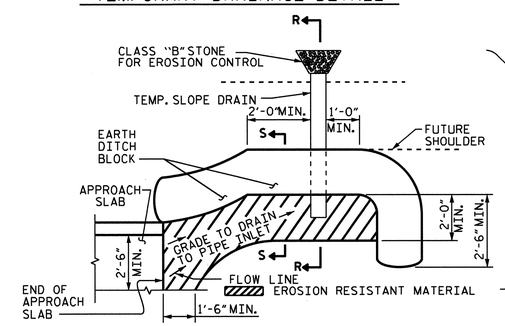

PLAN VIEW

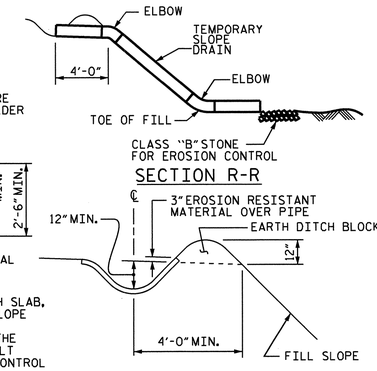

NOTE: IMMEDIATELY AFTER THE CONSTRUCTION OF THE APPROACH SLAB, THE CONTRACTOR SHALL PROVIDE TEMPORARY BERM AND SLOPE DRAIN. CONTRACTOR SHALL GRADE TO PIPE INLET AND PROVIDE EROSION RESISTANT MATERIAL AS SHOWN. THE EROSION RESISTANT MATERIAL SHALL BE EITHER 1) ASPHALT PLANT MIX, TYPE 1 OR TYPE 2, MIN. 2" DEPTH, 2) EROSION CONTROL MAT, OR 3) CONCRETE, AS DIRECTED BY THE ENGINEER. THE SLOPE DRAIN SHALL CONSIST OF A NON-PERFORATED TEMPORARY DRAINAGE PIPE, 12 INCHES IN DIAMETER.

TEMPORARY BERM AND SLOPE DRAIN DETAILS

(TO BE USED WHEN SHOULDER BERM GUTTER IS REQUIRED)

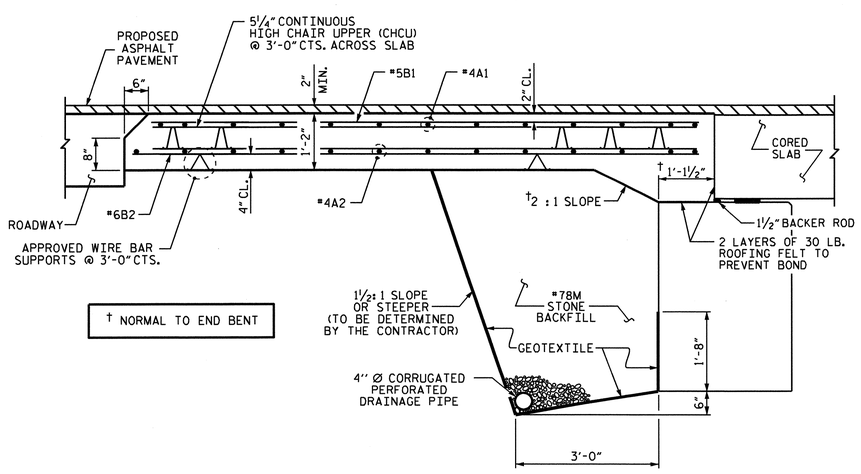

SECTION THRU SLAB

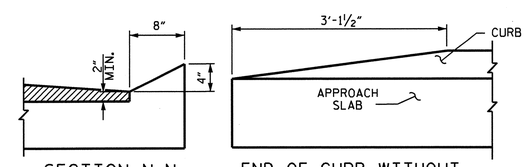

SECTION N-N

END OF CURB WITHOUT SHOULDER BERM GUTTER

CURB DETAILS

SPLICE LENGTHS		
BAR SIZE	EPOXY COATED	UNCOATED
#4	2'-0"	1'-9"
#5	2'-6"	2'-2"
#6	3'-10"	2'-7"

PROJECT NO. BD-5105P

GRANVILLE COUNTY

STATION: 14+83.00 -L-

STATE OF NORTH CAROLINA
DEPARTMENT OF TRANSPORTATION
RALEIGH

STANDARD
BRIDGE APPROACH SLAB
FOR PRESTRESSED CONCRETE
CORED SLAB UNIT
(SUB-REGIONAL TIER)
75° SKEW

REVISIONS							SHEET NO.
NO.	BY:	DATE:	NO.	BY:	DATE:		S-19
1			3				TOTAL SHEETS
2			4				19

ASSEMBLED BY :	A.C. OUTLAW	DATE :	4/26/12
CHECKED BY :	Fr. Lea	DATE :	6/25/12
DRAWN BY : SHS/MAA 5-09		REV. 12-11	MAA/AAC
CHECKED BY : BCH 5-09			

30-AUG-2012 12:40
S:\DPG2\KRISTY\DivisionProjects\BD5105P\Drafting\Miscellaneous\BD5105P_SD_AS_01.dgn
kalford

STANDARD NOTES

DESIGN DATA:

SPECIFICATIONS	A.A.S.H.T.O. (CURRENT)
LIVE LOAD	SEE PLANS
IMPACT ALLOWANCE	SEE A.A.S.H.T.O.
STRESS IN EXTREME FIBER OF	
STRUCTURAL STEEL - AASHTO M270 GRADE 36	20,000 LBS. PER SQ. IN.
- AASHTO M270 GRADE 50W	27,000 LBS. PER SQ. IN.
- AASHTO M270 GRADE 50	27,000 LBS. PER SQ. IN.
REINFORCING STEEL IN TENSION	
GRADE 60	24,000 LBS. PER SQ. IN.
CONCRETE IN COMPRESSION	1,200 LBS. PER SQ. IN.
CONCRETE IN SHEAR	SEE A.A.S.H.T.O.
STRUCTURAL TIMBER - TREATED OR	
UNTREATED - EXTREME FIBER STRESS	1,800 LBS. PER SQ. IN.
COMPRESSION PERPENDICULAR TO GRAIN OF TIMBER	375 LBS. PER SQ. IN.
EQUIVALENT FLUID PRESSURE OF EARTH	30 LBS. PER CU. FT. (MINIMUM)

MATERIAL AND WORKMANSHIP:

EXCEPT AS MAY OTHERWISE BE SPECIFIED ON PLANS OR IN THE SPECIAL PROVISIONS, ALL MATERIAL AND WORKMANSHIP SHALL BE IN ACCORDANCE WITH THE 2012 "STANDARD SPECIFICATIONS FOR ROADS AND STRUCTURES" OF THE N. C. DEPARTMENT OF TRANSPORTATION.

STEEL SHEET PILING FOR PERMANENT OR TEMPORARY APPLICATIONS SHALL BE HOT ROLLED.

CONCRETE:

UNLESS OTHERWISE REQUIRED ON PLANS, CLASS A CONCRETE SHALL BE USED FOR ALL PORTIONS OF ALL STRUCTURES WITH THE EXCEPTION THAT: CLASS AA CONCRETE SHALL BE USED IN BRIDGE SUPERSTRUCTURES, ABUTMENT BACKWALLS, AND APPROACH SLABS; AND CLASS B CONCRETE SHALL BE USED FOR SLOPE PROTECTION AND RIP RAP.

CONCRETE CHAMFERS:

UNLESS OTHERWISE NOTED ON THE PLANS, ALL EXPOSED CORNERS ON STRUCTURES SHALL BE CHAMFERED 3/4" WITH THE FOLLOWING EXCEPTIONS: TOP CORNERS OF CURBS MAY BE ROUNDED TO 1-1/2" RADIUS WHICH IS BUILT INTO CURB FORMS; CORNERS OF TRANSVERSE FLOOR EXPANSION JOINTS SHALL BE ROUNDED WITH A 1/4" FINISHING TOOL UNLESS OTHERWISE REQUIRED ON PLANS; AND CORNERS OF EXPANSION JOINTS IN THE ROADWAY FACES AND TOPS OF CURBS AND SIDEWALKS SHALL BE ROUNDED TO A 1/4" RADIUS WITH A FINISHING STONE OR TOOL UNLESS OTHERWISE REQUIRED ON PLANS.

DOWELS:

DOWELS WHEN INDICATED ON PLANS AS FOR CULVERT EXTENSIONS, SHALL BE EMBEDDED AT LEAST 12" INTO THE OLD CONCRETE AND GROUTED INTO PLACE WITH 1:2 CEMENT MORTAR.

ALLOWANCE FOR DEAD LOAD DEFLECTION, SETTLEMENT, ETC. IN CASTING SUPERSTRUCTURES:

BRIDGES SHALL BE BUILT ON THE GRADE OR VERTICAL CURVE SHOWN ON PLANS. SLABS, CURBS AND PARAPETS SHALL CONFORM TO THE GRADE OR CURVE.

ALL DIMENSIONS WHICH ARE GIVEN IN SECTION AND ARE AFFECTED BY DEAD LOAD DEFLECTIONS ARE DIMENSIONS AT CENTER LINE OF BEARING UNLESS OTHERWISE NOTED ON PLANS. IN SETTING FORMS FOR STEEL BEAM BRIDGES AND PRESTRESSED CONCRETE GIRDER BRIDGES, ADJUSTMENTS SHALL BE MADE DUE TO THE DEAD LOAD DEFLECTIONS FOR THE ELEVATIONS SHOWN. WHERE BLOCKS ARE SHOWN OVER BEAMS FOR BUILDING UP TO THE SLAB, THE VERTICAL DIMENSIONS OF THE BLOCKS SHALL BE ADJUSTED BETWEEN BEARINGS TO COMPENSATE FOR DEAD LOAD DEFLECTIONS, VERTICAL CURVE ORDINATE, AND ACTUAL BEAM CAMBER. WHERE BOTTOM OF SLAB IS IN LINE WITH BOTTOM OF TOP FLANGES, DEPTH OF SLAB BETWEEN BEARINGS SHALL BE ADJUSTED TO COMPENSATE FOR DEAD LOAD DEFLECTION, VERTICAL CURVE ORDINATE, AND ACTUAL BEAM CAMBER.

IN SETTING FALSEWORK AND FORMS FOR REINFORCED CONCRETE SPANS, AN ALLOWANCE SHALL BE MADE FOR DEAD LOAD DEFLECTIONS, SETTLEMENT OF FALSEWORK, AND PERMANENT CAMBER WHICH SHALL BE PROVIDED FOR IN ADDITION TO THE ELEVATIONS SHOWN. AFTER REMOVAL OF THE FALSEWORK, THE FINISHED STRUCTURES SHALL CONFORM TO THE PROFILE AND ELEVATIONS SHOWN ON THE PLANS AND CONSTRUCTION ELEVATIONS FURNISHED BY THE ENGINEER.

DETAILED DRAWINGS FOR FALSEWORK OR FORMS FOR BRIDGE SUPERSTRUCTURE AND ANY STRUCTURE OR PARTS OF A STRUCTURE AS NOTED ON THE PLANS SHALL BE SUBMITTED TO THE ENGINEER FOR APPROVAL BEFORE CONSTRUCTION OF THE FALSEWORK OR FORMS IS STARTED.

REINFORCING STEEL:

ALL REINFORCING STEEL SHALL BE DEFORMED. DIMENSIONS RELATIVE TO PLACEMENT OF REINFORCING ARE TO CENTERS OF BARS UNLESS OTHERWISE INDICATED IN THE PLANS. DIMENSIONS ON BAR DETAILS ARE TO CENTERS OF BARS OR ARE OUT TO OUT AS INDICATED ON PLANS.

WIRE BAR SUPPORTS SHALL BE PROVIDED FOR REINFORCING STEEL WHERE INDICATED ON THE PLANS. WHEN BAR SUPPORT PIECES ARE PLACED IN CONTINUOUS LINES, THEY SHALL BE SO PLACED THAT THE ENDS OF THE SUPPORTING WIRES SHALL BE LAPPED TO LOCK LEGS ON ADJOINING PIECES.

STRUCTURAL STEEL:

AT THE CONTRACTOR'S OPTION, HE MAY SUBSTITUTE 7/8" Ø SHEAR STUDS FOR THE ¾" Ø STUDS SPECIFIED ON THE PLANS. THIS SUBSTITUTION SHALL BE MADE AT THE RATE OF 3 - 7/8" Ø STUDS FOR 4 - 3/4" Ø STUDS, AND STUD SPACING CHANGES SHALL BE MADE AS NECESSARY TO PROVIDE THE SAME EQUIVALENT NUMBER OF 7/8" Ø STUDS ALONG THE BEAM AS SHOWN FOR 3/4" Ø STUDS BASED ON THE RATIO OF 3 - 7/8" Ø STUDS FOR 4 - 3/4" Ø STUDS. STUDS OF THE LENGTH SPECIFIED ON THE PLANS MUST BE PROVIDED. THE MAXIMUM SPACING SHALL BE 2'-0".

EXCEPT AT THE INTERIOR SUPPORTS OF CONTINUOUS BEAMS WHERE THE COVER PLATE IS IN CONTACT WITH BEARING PLATE, THE CONTRACTOR MAY, AT HIS OPTION, SUBSTITUTE FOR THE COVER PLATES DESIGNATED ON THE PLANS COVER PLATES OF THE EQUIVALENT AREA PROVIDED THESE PLATES ARE AT LEAST 5/16" IN THICKNESS AND DO NOT EXCEED A WIDTH EQUAL TO THE FLANGE WIDTH LESS 2" OR A THICKNESS EQUAL TO 2 TIMES THE FLANGE THICKNESS. THE SIZE OF FILLET WELDS SHALL CONFORM TO THE REQUIREMENTS OF THE CURRENT ANSI/AASHTO/AWS "BRIDGE WELDING CODE". ELECTROSLAG WELDING WILL NOT BE PERMITTED.

WITH THE SOLE EXCEPTION OF EDGES AT SURFACES WHICH BEAR ON OTHER SURFACES, ALL SHARP EDGES AND ENDS OF SHAPES AND PLATES SHALL BE SLIGHTLY ROUNDED BY SUITABLE MEANS TO A RADIUS OF APPROXIMATELY 1/16 INCH OR EQUIVALENT FLAT SURFACE AT A SUITABLE ANGLE PRIOR TO PAINTING, GALVANIZING, OR METALLIZING.

HANDRAILS AND POSTS:

METAL STANDARDS AND FACES OF THE CONCRETE END POSTS FOR THE METAL RAIL SHALL BE SET NORMAL TO THE GRADE OF THE CURB, UNLESS OTHERWISE SHOWN ON PLANS. THE METAL RAIL AND TOPS OF CONCRETE POSTS USED WITH THE ALUMINUM RAIL SHALL BE BUILT PARALLEL TO THE GRADE OF THE CURB.

METAL HANDRAILS SHALL BE IN ACCORDANCE WITH THE PLANS. RAILS SHALL BE AS MANUFACTURED FOR BRIDGE RAILING. CASTINGS SHALL BE OF A UNIFORM APPEARANCE. FINS AND OTHER DEFORMATIONS RESULTING FROM CASTING OR OTHERWISE SHALL BE REMOVED IN A MANNER SO THAT A UNIFORM COLORING OF THE COMPLETED CASTING SHALL BE OBTAINED. CASTINGS WITH DISCOLORATIONS OR OF NON-UNIFORM COLORING WILL NOT BE ACCEPTED. CERTIFIED MILL REPORTS ARE REQUIRED FOR METAL RAILS AND POSTS.

SPECIAL NOTES:

GENERALLY, IN CASE OF DISCREPANCY, THIS STANDARD SHEET OF NOTES SHALL GOVERN OVER THE SPECIFICATIONS, BUT THE REMAINDER OF THE PLANS SHALL GOVERN OVER NOTES HEREON, AND SPECIAL PROVISIONS SHALL GOVERN OVER ALL. SEE SPECIFICATIONS ARTICLE 105-4.

ENGLISH

JANUARY, 1990