PROJECT REFERENCE NO.	SHEET NO.
U-5118EN	Sig. 3.2

EDI MODEL 2018ECL-NC CONFLICT MONITOR PROGRAMMING DETAIL

(remove jumpers and set switches as shown)

REMOVE DIODE JUMPERS 2-6, 2-9, 2-11, 2-13, 2-15, 4-8, 4-10, 4-14, 4-16, 6-9, 6-11, 6-13, 6-15, 8-10, 8-14, 8-16, 9-11, 9-13, 9-15, 10-14, 10-16, 11-13, 11-15, 13-15, and 14-16.

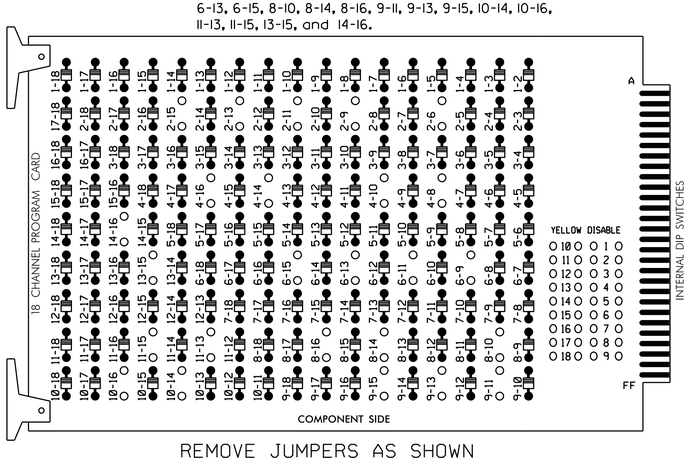

REMOVE JUMPERS AS SHOWN

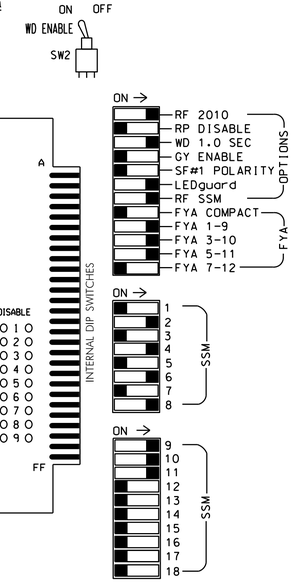

NOTES:

1. Card is provided with all diode jumpers in place. Removal of any jumper allows its channels to run concurrently.
2. Ensure jumpers SEL2-SEL5 and SEL9 are present on the monitor board.
3. Ensure that Red Enable is active at all times during normal operation.
4. Connect serial cable from conflict monitor to comm. port 1 of 2070 controller. Ensure conflict monitor communicates with 2070.

NOTES

1. To prevent "flash-conflict" problems, insert red flash program blocks for all unused vehicle load switches in the output file. The installer shall verify that signal heads flash in accordance with the Signal Plans.
2. Program phases 4 and 8 for Dual Entry.
3. Enable Simultaneous Gap-Out for all phases.
4. Program phases 2 and 6 for Variable Initial and Gap Reduction.
5. Program phases 2 and 6 for Start Up In Green.
6. Program phases 2, 4, 6 and 8 for 'STARTUP PED CALL'.
7. Program phases 2 and 6 for Yellow Flash, and overlaps 1 and 2 as Wag Overlaps.

EQUIPMENT INFORMATION

CONTROLLER.....2070L
CABINET.....332 W/ AUX
SOFTWARE.....ECONOLITE OASIS
CABINET MOUNT.....BASE
OUTPUT FILE POSITIONS...18 WITH AUX. OUTPUT FILE
LOAD SWITCHES USED.....S2,S3,S5,S6,S8,S9,S11,S12, AUX S1,AUX S2,AUX S4
PHASES USED.....2,2PED,4,4PED,6,6PED,8,8PED
OVERLAP "A".....6
OVERLAP "B".....8
OVERLAP "C".....2
OVERLAP "D".....NOT USED

SIGNAL HEAD HOOK-UP CHART

LOAD SWITCH NO.	S1	S2	S3	S4	S5	S6	S7	S8	S9	S10	S11	S12	AUX S1	AUX S2	AUX S3	AUX S4	AUX S5	AUX S6
CMU CHANNEL NO.	1	2	13	3	4	14	5	6	15	7	8	16	9	10	17	11	12	18
PHASE	1	2	2 PED	3	4	4 PED	5	6	6 PED	7	8	8 PED	OLA	OLB	SPARE	OLC	OLD	SPARE
SIGNAL HEAD NO.	NU	22,23	P21, P22	NU	41,42	P41, P42	NU	62,63	P61, P62	NU	82,83	P81, P82	61★	81★	NU	21★	NU	NU
RED		128			101			134			107							
YELLOW		129			102			135			108							
GREEN		130			103			136			109							
RED ARROW													A121	A124		A114		
YELLOW ARROW													A122	A125		A115		
FLASHING YELLOW ARROW													A123	A126		A116		
GREEN ARROW																		
✋			113		104			119			110							
🚶			115		106			121			112							

NU = Not Used

★ See pictorial of head wiring in detail below.

FYA SIGNAL WIRING DETAIL

(wire signal heads as shown)

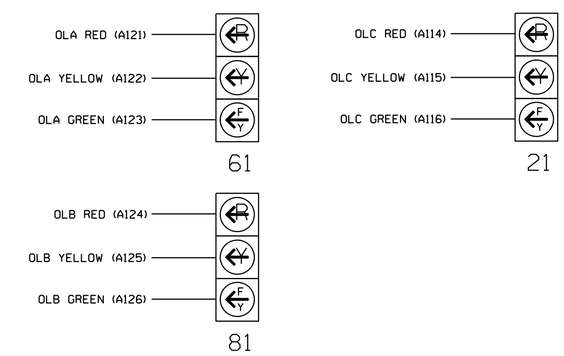

INPUT FILE POSITION LAYOUT

(front view)

		1	2	3	4	5	6	7	8	9	10	11	12	13	14
FILE "I"	U	SLOT EMPTY	Ø2 2A	SLOT EMPTY	SLOT EMPTY	SLOT EMPTY	Ø4 4A	SLOT EMPTY	SLOT EMPTY	SLOT EMPTY	SLOT EMPTY	SLOT EMPTY	Ø2 PED DC ISOLATOR	Ø6 PED DC ISOLATOR	FS DC ISOLATOR
	L		Ø2 2B				NOT USED						Ø4 PED DC ISOLATOR	Ø8 PED DC ISOLATOR	ST DC ISOLATOR
FILE "J"	U	SLOT EMPTY	Ø6 6A	SLOT EMPTY	SLOT EMPTY	SLOT EMPTY	Ø8 8A	Ø8 8C	SLOT EMPTY	SLOT EMPTY	SLOT EMPTY	SLOT EMPTY	SLOT EMPTY	SLOT EMPTY	SLOT EMPTY
	L		Ø6 6B				Ø8 8B	NOT USED							

EX.: 1A, 2A, ETC. = LOOP NO.'S

FS = FLASH SENSE
ST = STOP TIME

INPUT FILE CONNECTION & PROGRAMMING CHART

LOOP NO.	LOOP TERMINAL	INPUT FILE POS.	PIN NO.	INPUT ASSIGNMENT NO.	DETECTOR NO.	NEMA PHASE	CALL	EXTEND	FULL TIME DELAY	STRETCH TIME	DELAY TIME
2A	TB2-5,6	I2U	39	1	2	2	Y	Y			
2B	TB2-7,8	I2L	43	5	12	2	Y	Y	Y		3
4A	TB4-9,10	I6U	41	3	4	4	Y	Y			
6A	TB3-5,6	J2U	40	2	6	6	Y	Y			
6B	TB3-7,8	J2L	44	6	16	6	Y	Y	Y		3
8A	TB5-9,10	J6U	42	4	8	8	Y	Y			3
8B	TB5-11,12	J6L	46	8	18	8	Y	Y			
8C	TB7-1,2	J7U	66	28	38	8	Y	Y			15
PED PUSH BUTTONS											
P21,P22	TB8-4,6	I12U	67	29	PED 2	2 PED					
P41,P42	TB8-5,6	I12L	69	31	PED 4	4 PED					
P61,P62	TB8-7,9	I13U	68	30	PED 6	6 PED					
P81,P82	TB8-8,9	I13L	70	32	PED 8	8 PED					

NOTE:
INSTALL DC ISOLATORS IN INPUT FILE SLOTS I12 AND I13.

INPUT FILE POSITION LEGEND: J2L
FILE J
SLOT 2
LOWER

COUNTDOWN PEDESTRIAN SIGNAL OPERATION

Countdown Ped Signals are required to display timing only during Ped Clearance Interval. Consult Ped Signal Module user's manual for instructions on selecting this feature.

FLASHER CIRCUIT MODIFICATION DETAIL

IN ORDER TO INSURE THAT SIGNALS FLASH CONCURRENTLY ON THE SAME APPROACH, MAKE THE FOLLOWING FLASHER CIRCUIT CHANGES:

1. ON REAR OF PDA - REMOVE WIRE FROM TERM. T2-4 AND TERMINATE ON T2-2.
2. ON REAR OF PDA - REMOVE WIRE FROM TERM. T2-5 AND TERMINATE ON T2-3.
3. REMOVE FLASHER UNIT 2.

THE CHANGES LISTED ABOVE TIES ALL PHASES AND OVERLAPS TO FLASHER UNIT 1.

THIS ELECTRICAL PLAN SUPERSEDES THE PLAN ORIGINALLY SEALED ON 11/6/14.

THIS ELECTRICAL DETAIL IS FOR
THE SIGNAL DESIGN: 05-1499
DESIGNED: January 2015
SEALED: 1/23/2015
REVISED: N/A

Electrical Detail - Sheet 1 of 2

ELECTRICAL AND PROGRAMMING DETAILS FOR:

SR 2053 (Jones Dairy Road) at SR 2054 (Chalks Road)/ Green Mountain Drive

Division 5 Wake County Wake Forest

PLAN DATE: January 2015 REVIEWED BY:
PREPARED BY: S. Armstrong REVIEWED BY:

REVISIONS	INIT.	DATE

Prepared in the Offices of: Transportation Mobility and Safety Division, Traffic Engineering Branch, Signals Management Section, Department of Transportation, State of North Carolina
750 N.Greenfield Pkwy,Garner,NC 27529

SEAL
NORTH CAROLINA PROFESSIONAL SEAL 008453 ENGINEER JOHN T. ROWE, JR.

DocuSigned by: John T. Rowe, Jr. 1/26/2015
641D60C145EE4F5...
DATE

SIG. INVENTORY NO. 05-1499

26-JAN-2015 08:13
S:\TSG\ITS\Signals\Workgroups\Sig Mgmt\Armstrong\051499_sm_ele_xxx.dgn
sarmstrong