PROJECT REFERENCE NO.	SHEET NO.
U-5118EN	Sig. 1.2

EDI MODEL 2018ECL-NC CONFLICT MONITOR PROGRAMMING DETAIL

(remove jumpers and set switches as shown)

REMOVE DIODE JUMPERS I-5, I-6, I-9, I-11, I-15, 2-5, 2-6, 2-9, 2-11, 2-13, 2-15, 4-8, 4-10, 4-12, 4-14, 4-16, 5-9, 5-11, 5-13, 6-9, 6-11, 6-13, 6-15, 8-10, 8-12, 8-14, 8-16, 9-11, 9-13, 9-15, 10-12, 10-14, 10-16, 11-13, 11-15, 12-14, 12-16, 13-15 and 14-16.

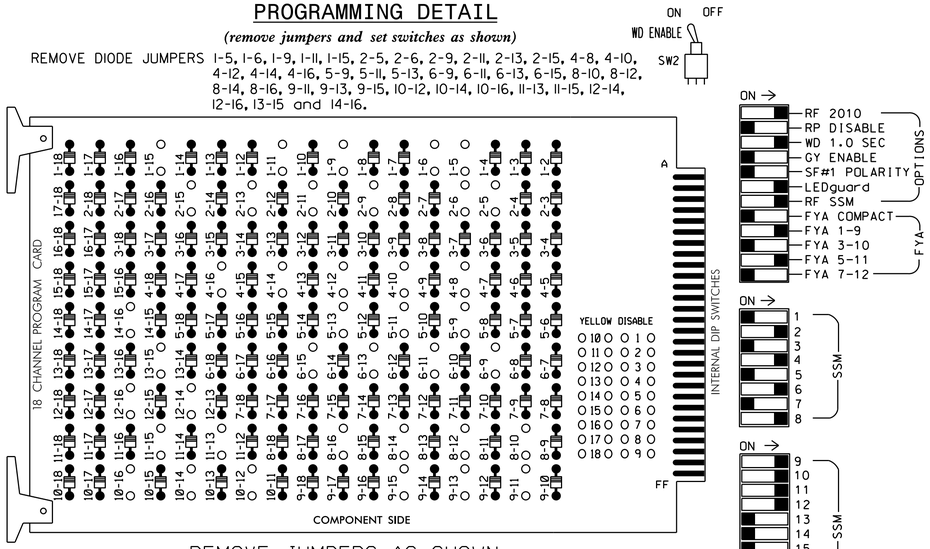

REMOVE JUMPERS AS SHOWN

NOTES:

1. Card is provided with all diode jumpers in place. Removal of any jumper allows its channels to run concurrently.
2. Ensure jumpers SEL2-SEL5 and SEL9 are present on the monitor board.
3. Ensure that Red Enable is active at all times during normal operation.
4. Connect serial cable from conflict monitor to comm. port 1 of 2070 controller. Ensure conflict monitor communicates with 2070.

NOTES

1. To prevent "flash-conflict" problems, insert red flash program blocks for all unused vehicle load switches in the output file. The installer shall verify that signal heads flash in accordance with the Signal Plans.
2. Program phases 4 and 8 for Dual Entry.
3. Enable Simultaneous Gap-Out for all phases.
4. Program phases 2 and 6 for Variable Initial and Gap Reduction.
5. Program phases 2 and 6 for Start Up In Green.
6. Program phases 2, 4, 6 and 8 for 'STARTUP PED CALL'.
7. Program phases 2 and 6 for Yellow Flash, and overlaps 1 and 2 as Wag Overlaps.

EQUIPMENT INFORMATION

CONTROLLER.....2070L
CABINET.....332 W/ AUX
SOFTWARE.....ECONOLITE OASIS
CABINET MOUNT.....BASE
OUTPUT FILE POSITIONS...18 (12-STD; 6-AUX)
LOAD SWITCHES USED.....S1,S2,S3,S5,S6,S7,S8,S9,S11,S12
AUX S1,AUX S2,AUX S4,AUX S5
PHASES USED.....1,2,2 PED,4,4 PED,5,6,6 PED,8,8 PED
OVERLAP "A".....1+2
OVERLAP "B".....8
OVERLAP "C".....5+6
OVERLAP "D".....4

SIGNAL HEAD HOOK-UP CHART

LOAD SWITCH NO.	S1	S2	S3	S4	S5	S6	S7	S8	S9	S10	S11	S12	AUX S1	AUX S2	AUX S3	AUX S4	AUX S5	AUX S6
CMU CHANNEL NO.	1	2	13	3	4	14	5	6	15	7	8	16	9	10	17	11	12	18
PHASE	1	2	2 PED	3	4	4 PED	5	6	6 PED	7	8	8 PED	OLA	OLB	SPARE	OLC	OLD	SPARE
SIGNAL HEAD NO.	11★	21,22	P21, P22	NU	42,43	P41, P42	51★	61,62	P61, P62	NU	82,83	P81, P82	11★	81★	NU	51★	41★	NU
RED		128			101			134			107							
YELLOW	✳	129			102		✳	135			108							
GREEN		130			103			136			109							
RED ARROW													A121	A124		A114	A101	
YELLOW ARROW													A122	A125		A115	A102	
FLASHING YELLOW ARROW													A123	A126		A116	A103	
GREEN ARROW	127						133											
✋			113			104			119			110						
🚶			115			106			121			112						

NU = Not Used

✳ Denotes install load resistor. See load resistor installation detail this sheet.

★ See pictorial of head wiring in detail below.

FYA SIGNAL WIRING DETAIL

(wire signal heads as shown)

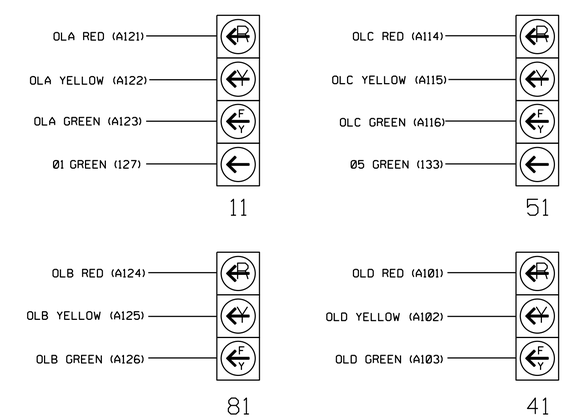

NOTE

1. The sequence display for signal heads 11 and 51 require special logic programming. See sheet 2 of 2 for programming instructions.

INPUT FILE POSITION LAYOUT

(front view)

		1	2	3	4	5	6	7	8	9	10	11	12	13	14
FILE "I"	U	Ø 1 / 1A	Ø 2 / 2A	SLOT EMPTY	WIRED INPUT ⊗	SLOT EMPTY	Ø 4 / 4A	Ø 4 / 4C	SLOT EMPTY	SLOT EMPTY	SLOT EMPTY	SLOT EMPTY	Ø2 PED / DC ISOLATOR	Ø6 PED / DC ISOLATOR	FS / DC ISOLATOR
	L	NOT USED	Ø 2 / 2B				Ø 4 / 4B	NOT USED					Ø4 PED / DC ISOLATOR	Ø8 PED / DC ISOLATOR	ST / DC ISOLATOR
FILE "J"	U	Ø 5 / 5A	Ø 6 / 6A	SLOT EMPTY	WIRED INPUT ⊗	SLOT EMPTY	Ø 8 / 8A	SLOT EMPTY	SLOT EMPTY	SLOT EMPTY	SLOT EMPTY	SLOT EMPTY	SLOT EMPTY	SLOT EMPTY	SLOT EMPTY
	L	NOT USED	Ø 6 / 6B				Ø 8 / 8B								

EX.: 1A, 2A, ETC. = LOOP NO.'S

FS = FLASH SENSE
ST = STOP TIME

⊗ Wired Input - Do not populate slot with detector card

INPUT FILE CONNECTION & PROGRAMMING CHART

LOOP NO.	LOOP TERMINAL	INPUT FILE POS.	PIN NO.	INPUT ASSIGNMENT NO.	DETECTOR NO.	NEMA PHASE	CALL	EXTEND	FULL TIME DELAY	STRETCH TIME	DELAY TIME
1A[1]	TB2-1,2	I1U	56	18	1	1	Y	Y			15
	-	J4U	48	10	26	6	Y	Y	Y		3
2A	TB2-5,6	I2U	39	1	2	2	Y	Y			
2B	TB2-7,8	I2L	43	5	12	2	Y	Y			
4A	TB4-9,10	I6U	41	3	4	4	-	Y		2.4	
4B	TB4-11,12	I6L	45	7	14	4	Y	Y			3
4C	TB6-1,2	I7U	65	27	34	4	Y	Y			10
5A[2]	TB3-1,2	J1U	55	17	5	5	Y	Y			15
	-	I4U	47	9	22	2	Y	Y	Y		3
6A	TB3-5,6	J2U	40	2	6	6	Y	Y			
6B	TB3-7,8	J2L	44	6	16	6	Y	Y			
8A	TB5-9,10	J6U	42	4	8	8	Y	Y			3
8B	TB5-11,12	J6L	46	8	18	8	Y	Y			10
PED PUSH BUTTONS											
P21,P22	TB8-4,6	I12U	67	29	PED 2	2 PED					
P41,P42	TB8-5,6	I12L	69	31	PED 4	4 PED					
P61,P62	TB8-7,9	I13U	68	30	PED 6	6 PED					
P81,P82	TB8-8,9	I13L	70	32	PED 8	8 PED					

NOTE:
INSTALL DC ISOLATORS IN INPUT FILE SLOTS I12 AND I13.

[1] Add jumper from I1-W to J4-W, on rear of input file.
[2] Add jumper from J1-W to I4-W, on rear of input file.

INPUT FILE POSITION LEGEND: J2L
FILE J
SLOT 2
LOWER

LOAD RESISTOR INSTALLATION DETAIL

ACCEPTABLE VALUES

VALUE (ohms)	WATTAGE
1.5K - 1.9K	25W (min)
2.0K - 3.0K	10W (min)

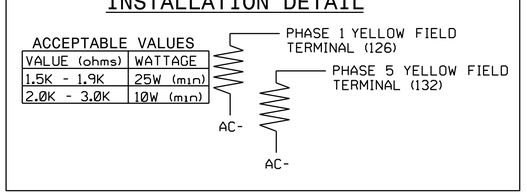

COUNTDOWN PEDESTRIAN SIGNAL OPERATION

Countdown Ped Signals are required to display timing only during Ped Clearance Interval. Consult Ped Signal Module user's manual for instructions on selecting this feature.

THIS ELECTRICAL DETAIL IS FOR
THE SIGNAL DESIGN: 05-1818
DESIGNED: November 2014
SEALED: 12/3/14
REVISED: N/A

Electrical Detail - Sheet 1 of 2

ELECTRICAL AND PROGRAMMING DETAILS FOR:

Prepared in the Offices of:
Transportation Mobility and Safety Division
STATE OF NORTH CAROLINA DEPARTMENT OF TRANSPORTATION
Signals Management Section
750 N.Greenfield Pkwy,Garner,NC 27529

NC 55 (N. Broad Street)
at
SR 1111 (Old Powell Road)

Division 5 | Wake County | Fuquay-Varina

PLAN DATE:	December 2014	REVIEWED BY:	T. Joyce
PREPARED BY:	B. Simmons	REVIEWED BY:	

REVISIONS	INIT.	DATE

SEAL
NORTH CAROLINA PROFESSIONAL SEAL 022013 ENGINEER GEORGE C. BROWN

DocuSigned by: George C. Brown 12/5/2014
F12601ED0BEB434...
DATE

SIG. INVENTORY NO. 05-1818

05-DEC-2014 08:51
S:\TTSSGN\ITS Signals\Workgroups\Sig Mon\Simmons\Working Folder\Electrical Details\Division 05\051818_sm.elte.xxx.dgn
bsimmons