STATE OF NORTH CAROLINA
DEPARTMENT OF TRANSPORTATION
HIGHWAY DIVISION 5

PROPOSAL

DATE AND TIME OF BID OPENING: February 28, 2018 AT 2:00 PM

CONTRACT ID: DE00247

WBS ELEMENT NO.: 44851.3.10

FEDERAL AID NO.: HSIP-3109(003)

COUNTY: Wake

TIP NO.: W-5705I

MILES: 0.00 MILES

ROUTE NO.: SR 3109 (Brier Creek Pkwy)

LOCATION: Raleigh, NC

TYPE OF WORK: SIGNAL INSTALLATION

NOTICE:

ALL BIDDERS SHALL COMPLY WITH ALL APPLICABLE LAWS REGULATING THE PRACTICE OF GENERAL CONTRACTING AS CONTAINED IN CHAPTER 87 OF THE GENERAL STATUTES OF NORTH CAROLINA WHICH REQUIRES THE BIDDER TO BE LICENSED BY THE N.C. LICENSING BOARD FOR CONTRACTORS WHEN BIDDING ON ANY NON-FEDERAL AID PROJECT WHERE THE BID IS $30,000 OR MORE, EXCEPT FOR CERTAIN SPECIALTY WORK AS DETERMINED BY THE LICENSING BOARD. BIDDERS SHALL ALSO COMPLY WITH ALL OTHER APPLICABLE LAWS REGULATING THE PRACTICES OF ELECTRICAL, PLUMBING, HEATING AND AIR CONDITIONING AND REFRIGERATION CONTRACTING AS CONTAINED IN CHAPTER 87 OF THE GENERAL STATUTES OF NORTH CAROLINA. NOTWITHSTANDING THESE LIMITATIONS ON BIDDING, THE BIDDER WHO IS AWARDED ANY FEDERAL - AID FUNDED PROJECT SHALL COMPLY WITH CHAPTER 87 OF THE GENERAL STATUTES OF NORTH CAROLINA FOR LICENSING REQUIREMENTS WITHIN 60 CALENDAR DAYS OF BID OPENING.

THIS IS A ROADWAY PROJECT. **BID BONDS ARE NOT REQUIRED.**

_____

NAME OF BIDDER

_____

ADDRESS OF BIDDER

PROPOSAL FOR THE CONSTRUCTION OF

CONTRACT No. DE00247 IN WAKE COUNTY, NORTH CAROLINA

Date_____ 20_____

DEPARTMENT OF TRANSPORTATION,

RALEIGH, NORTH CAROLINA

The Bidder has carefully examined the location of the proposed work to be known as Contract No. **DE00247**; has carefully examined the plans and specifications, which are acknowledged to be part of the proposal, the special provisions, the proposal, the form of contract, and the forms of contract payment bond and contract performance bond; and thoroughly understands the stipulations, requirements and provisions. The undersigned bidder agrees to bound upon his execution of the bid and subsequent award to him by the Department of Transportation in accordance with this proposal to provide the necessary contract payment bond and contract performance bond within fourteen days after the written notice of award is received by him. The undersigned Bidder further agrees to provide all necessary machinery, tools, labor, and other means of construction; and to do all the work and to furnish all materials, except as otherwise noted, necessary to perform and complete the said contract in accordance with *the 2018 Standard Specifications for Roads and Structures* by the dates(s) specified in the Project Special Provisions and in accordance with the requirements of the Engineer, and at the unit or lump sum prices, as the case may be, for the various items given on the sheets contained herein.

The Bidder shall provide and furnish all the materials, machinery, implements, appliances and tools, and perform the work and required labor to construct and complete State Highway Contract No. **DE00247** in **Wake County** for the unit or lump sum prices, as the case may be, bid by the Bidder in his bid and according to the proposal, plans, and specifications prepared by said Department, which proposal, plans, and specifications show the details covering this project, and hereby become a part of this contract.

The published volume entitled *North Carolina Department of Transportation, Raleigh, Standard Specifications for Roads and Structures, January 2018* with all amendments and supplements thereto, is by reference incorporated into and made a part of this contract; that, except as herein modified, all the construction and work included in this contract is to be done in accordance with the specifications contained in said volume, and amendments and supplements thereto, under the direction of the Engineer.

If the proposal is accepted and the award is made, the contract is valid only when signed either by the Contract Officer or such other person as may be designated by the Secretary to sign for the Department of Transportation. The conditions and provisions herein cannot be changed except over the signature of the said Contract Officer or Division Engineer.

The quantities shown in the itemized proposal for the project are considered to be approximate only and are given as the basis for comparison of bids. The Department of Transportation may increase or decrease the quantity of any item or portion of the work as may be deemed necessary or expedient.

An increase or decrease in the quantity of an item will not be regarded as sufficient ground for an increase or decrease in the unit prices, nor in the time allowed for the completion of the work, except as provided for the contract.

Accompanying this bid is a bid bond secured by a corporate surety, or certified check payable to the order of the Department of Transportation, for five percent of the total bid price, which deposit is to be forfeited as liquidated damages in case this bid is accepted and the Bidder shall fail to provide the required payment and performance bonds with the Department of Transportation, under the condition of this proposal, within 14 calendar days after the written notice of award is received by him, as provided in the Standard Specifications; otherwise said deposit will be returned to the Bidder.

TABLE OF CONTENTS

COVER SHEET
PROPOSAL SHEET

PROJECT SPECIAL PROVISIONS

GENERAL G-1
BOND REQUIREMENTS – No Bonds Required G-1
CONTRACT TIME AND LIQUIDATED DAMAGES: G-1
INTERMEDIATE CONTRACT TIME NUMBER 1 AND LIQUIDATED DAMAGES: ... G-1
INTERMEDIATE CONTRACT TIME NUMBER 2 AND LIQUIDATED DAMAGES: ... G-2
NO MAJOR CONTRACT ITEMS: G-3
NO SPECIALTY ITEMS: G-3
FUEL PRICE ADJUSTMENT: G-3
SCHEDULE OF ESTIMATED COMPLETION PROGRESS: G-4
DISADVANTAGED BUSINESS ENTERPRISE (DIVISIONS): G-4
CERTIFICATION FOR FEDERAL-AID CONTRACTS: G-17
CONTRACTOR'S LICENSE REQUIREMENTS: G-18
U.S. DEPARTMENT OF TRANSPORTATION HOTLINE: G-18
CARGO PREFERENCE ACT: G-18
SUBSURFACE INFORMATION: G-19
BIDS OVER LIMIT: G-19
DIVISION LET CONTRACT PREQUALIFICATION: G-19
CONTRACTOR CLAIM SUBMITTAL FORM: G-20

ROADWAY R-1

STANDARD SPECIAL PROVISIONS

AVAILABILITY OF FUNDS – TERMINATION OF CONTRACTS SSP-1
ERRATA SSP-2
PLANT AND PEST QUARANTINES SSP-3
MINORITY AND FEMALE EMPLOYMENT REQUIREMENTS SSP-4
REQUIRED CONTRACT PROVISIONS FEDERAL - AID CONSTRUCTION CONTRACTS SSP-7
ON-THE-JOB TRAINING SSP-16
MINIMUM WAGES SSP-19

UNIT PROJECT SPECIAL PROVISIONS

TRAFFIC SIGNALS TS-1

DBE LISTING FORM
ADDENDUM(S)
AWARD LIMITS ON MULTIPLE PROJECTS
PROPOSAL ITEM SHEET AND SIGNATURE SHEET

INSTRUCTIONS TO BIDDERS

PLEASE READ ALL INSTRUCTIONS CAREFULLY
BEFORE PREPARING AND SUBMITTING YOUR BID.

All bids shall be prepared and submitted in accordance with the following requirements. Failure to comply with any requirement may cause the bid to be considered irregular and may be grounds for rejection of the bid.

For preparing and submitting the bid electronically using the on-line system Bid Express®, refer to Article 102-8(B) of the *2018 Standard Specifications.*

Bidders that bid electronically on Raleigh Central-Let projects will need a separate Digital Signature form Bid Express® for Division Contracts.

ELECTRONIC ON-LINE BID THRU BID EXPRESS:

1. Download entire proposal from Connect NCDOT website. Download EBS file from Bid Express website.
2. Prepare and submit EBS file using Expedite software.
3. Expedite software necessary for electronic bid preparation may be downloaded from the Connect NCDOT website at: https://connect.ncdot.gov/letting/Pages/EBS-Information.aspx or from Bid Express.

PROJECT SPECIAL PROVISIONS

GENERAL

BOND REQUIREMENTS – No Bonds Required
(06-01-16) SPD 01-420B

The provisions of Articles 102-10 and 103-7 of the *2018 Standard Specifications for Roads and Structures* are waived for this project. No bonds required.

CONTRACT TIME AND LIQUIDATED DAMAGES:
(7-1-95) (Rev. 12-18-07) 108 SP1 G10 B

The date of availability for this contract is **March 28, 2018.**

The completion date for this contract is **July 18, 2018**.

The liquidated damages for this contract are **Five Hundred Dollars ($ 500.00)** per calendar day.

INTERMEDIATE CONTRACT TIME NUMBER 1 AND LIQUIDATED DAMAGES:
(2-20-07) 108 SP1 G14 A

The Contractor shall complete the required work of installing, maintaining, and removing the traffic control devices for lane closures and restoring traffic to the existing traffic pattern. The Contractor shall not close or narrow a lane of traffic on **ANY ROAD** during the following time restrictions:

DAY AND TIME RESTRICTIONS

MONDAY THRU FRIDAY 6 AM TO 9 AM
MONDAY THRU FRIDAY 4 PM TO 7 PM

In addition, the Contractor shall not close or narrow a lane of traffic on **ANY ROAD**, detain and/or alter the traffic flow on or during holidays, holiday weekends, special events, or any other time when traffic is unusually heavy, including the following schedules:

HOLIDAY AND HOLIDAY WEEKEND LANE CLOSURE RESTRICTIONS

1. For **unexpected occurrence** that creates unusually high traffic volumes, as directed by the Engineer.

2. For **New Year's Day**, between the hours of **4:00 PM** December 31st and **9:00 AM** January 2nd. If New Year's Day is on a Friday, Saturday, Sunday or Monday, then until **6:00 PM** the following Tuesday.

3. For **Easter**, between the hours of **4:00 PM** Thursday and **9:00 AM** Monday.

4. For **Memorial Day**, between the hours of **4:00 PM** Friday and **9:00 AM** Tuesday.

5. For **Independence Day**, between the hours of **4:00 PM** the day before Independence Day and **9:00 AM** the day after Independence Day.

   If **Independence Day** is on a Friday, Saturday, Sunday or Monday, then between the hours of **4:00 PM** the Thursday before Independence Day and **9:00 AM** the Tuesday after Independence Day.

6. For **Labor Day**, between the hours of **4:00 PM** Friday and **9:00 AM** Tuesday.

7. For **Thanksgiving Day**, between the hours of **4:00 PM** Tuesday and **9:00 AM** Monday.

8. For **Christmas**, between the hours of **4:00 PM** the Friday before the week of Christmas Day and **9:00 AM** the following Tuesday after the week of Christmas Day.

Holidays and holiday weekends shall include New Year's, Easter, Memorial Day, Independence Day, Labor Day, Thanksgiving, and Christmas. The Contractor shall schedule his work so that lane closures will not be required during these periods, unless otherwise directed by the Engineer.

The time of availability for this intermediate contract work shall be the time the Contractor begins to install all traffic control devices for lane closures according to the time restrictions listed herein.

The completion time for this intermediate contract work shall be the time the Contractor is required to complete the removal of all traffic control devices for lane closures according to the time restrictions stated above and place traffic in the existing traffic pattern.

The liquidated damages are **Five Hundred Dollars ($ 500.00**) per **quarter** hour.

INTERMEDIATE CONTRACT TIME NUMBER 2 AND LIQUIDATED DAMAGES:

(5-21-13) 108 SP1 G14 I

The Contractor shall complete the work required of installing each new inductive loop after the removal of each existing loop by the milling, patching or resurfacing operations and shall place and maintain traffic on same.

The date of availability for this intermediate contract time for each inductive loop installation will be the date when the Contractor elects to disturb the existing inductive loop.

The completion date for this intermediate contract time for each inductive loop installation will be the date which is seven (7) consecutive calendar days after the date of availability.

The liquidated damages are **Five Hundred Dollars ($ 500.00)** per calendar day.

NO MAJOR CONTRACT ITEMS:
(2-19-02) (Rev. 8-21-07) 104 SP1 G31

None of the items included in this contract will be major items.

NO SPECIALTY ITEMS:
(7-1-95) 108-6 SP1 G34

None of the items included in this contract will be specialty items (see Article 108-6 of the *2018 Standard Specifications*).

FUEL PRICE ADJUSTMENT:
(11-15-05) (Rev. 2-18-14) 109-8 SP1 G43

Revise the *2018 Standard Specifications* as follows:

Page 1-83, Article 109-8, Fuel Price Adjustments, add the following:

The base index price for DIESEL #2 FUEL is **$ 1.9853** per gallon. Where any of the following are included as pay items in the contract, they will be eligible for fuel price adjustment.

The pay items and the fuel factor used in calculating adjustments to be made will be as follows:

Description	Units	Fuel Usage Factor Diesel
Unclassified Excavation	Gal/CY	0.29
Borrow Excavation	Gal/CY	0.29
Class IV Subgrade Stabilization	Gal/Ton	0.55
Aggregate Base Course	Gal/Ton	0.55
Sub-Ballast	Gal/Ton	0.55
Asphalt Concrete Base Course, Type ____	Gal/Ton	2.90
Asphalt Concrete Intermediate Course, Type ____	Gal/Ton	2.90
Asphalt Concrete Surface Course, Type ____	Gal/Ton	2.90
Open-Graded Asphalt Friction Course	Gal/Ton	2.90
Permeable Asphalt Drainage Course, Type ____	Gal/Ton	2.90
Sand Asphalt Surface Course, Type ____	Gal/Ton	2.90
Aggregate for Cement Treated Base Course	Gal/Ton	0.55
Portland Cement for Cement Treated Base Course	Gal/Ton	0.55
__" Portland Cement Concrete Pavement	Gal/SY	0.245
Concrete Shoulders Adjacent to __" Pavement	Gal/SY	0.245

SCHEDULE OF ESTIMATED COMPLETION PROGRESS:

(7-15-08) (Rev. 5-16-17) 108-2 SP1 G58

The Contractor's attention is directed to the Standard Special Provision entitled *Availability of Funds Termination of Contracts* included elsewhere in this proposal. The Department of Transportation's schedule of estimated completion progress for this project as required by that Standard Special Provision is as follows:

	Fiscal Year	Progress (% of Dollar Value)
2018	(7/01/17 - 6/30/18)	**85**% of Total Amount Bid
2019	(7/01/18 - 6/30/19)	**100**% of Total Amount Bid

The Contractor shall also furnish his own progress schedule in accordance with Article 108-2 of the *2018 Standard Specifications*. Any acceleration of the progress as shown by the Contractor's progress schedule over the progress as shown above shall be subject to the approval of the Engineer.

DISADVANTAGED BUSINESS ENTERPRISE (DIVISIONS):

(10-16-07)(Rev.1-16-18) 102-15(J) SP1 G62

Description

The purpose of this Special Provision is to carry out the U.S. Department of Transportation's policy of ensuring nondiscrimination in the award and administration of contracts financed in whole or in part with Federal funds. This provision is guided by 49 CFR Part 26.

Definitions

Additional DBE Subcontractors - Any DBE submitted at the time of bid that will not be used to meet the DBE goal. No submittal of a Letter of Intent is required.

Committed DBE Subcontractor - Any DBE submitted at the time of bid that is being used to meet the DBE goal by submission of a Letter of Intent. Or any DBE used as a replacement for a previously committed DBE firm.

Contract Goal Requirement - The approved DBE participation at time of award, but not greater than the advertised contract goal.

DBE Goal - A portion of the total contract, expressed as a percentage, that is to be performed by committed DBE subcontractor(s).

Disadvantaged Business Enterprise (DBE) - A firm certified as a Disadvantaged Business Enterprise through the North Carolina Unified Certification Program.

Goal Confirmation Letter - Written documentation from the Department to the bidder confirming the Contractor's approved, committed DBE participation along with a listing of the committed DBE firms.

Manufacturer - A firm that operates or maintains a factory or establishment that produces on the premises, the materials or supplies obtained by the Contractor.

Regular Dealer - A firm that owns, operates, or maintains a store, warehouse, or other establishment in which the materials or supplies required for the performance of the contract are bought, kept in stock, and regularly sold to the public in the usual course of business. A regular dealer engages in, as its principal business and in its own name, the purchase and sale or lease of the products in question. A regular dealer in such bulk items as steel, cement, gravel, stone, and petroleum products need not keep such products in stock, if it owns and operates distribution equipment for the products. Brokers and packagers are not regarded as manufacturers or regular dealers within the meaning of this section.

North Carolina Unified Certification Program (NCUCP) - A program that provides comprehensive services and information to applicants for DBE certification, such that an applicant is required to apply only once for a DBE certification that will be honored by all recipients of USDOT funds in the state and not limited to the Department of Transportation only. The Certification Program is in accordance with 49 CFR Part 26.

United States Department of Transportation (USDOT) - Federal agency responsible for issuing regulations (49 CFR Part 26) and official guidance for the DBE program.

Forms and Websites Referenced in this Provision

DBE Payment Tracking System - On-line system in which the Contractor enters the payments made to DBE subcontractors who have performed work on the project. https://apps.dot.state.nc.us/Vendor/PaymentTracking/

DBE-IS *Subcontractor Payment Information* - Form for reporting the payments made to all DBE firms working on the project. This form is for paper bid projects only. https://connect.ncdot.gov/business/Turnpike/Documents/Form%20DBE-IS%20Subcontractor%20Payment%20Information.pdf

RF-1 *DBE Replacement Request Form* - Form for replacing a committed DBE. http://connect.ncdot.gov/projects/construction/Construction%20Forms/DBE%20MBE%20WBE%20Replacement%20Request%20Form.pdf

SAF *Subcontract Approval Form* - Form required for approval to sublet the contract. http://connect.ncdot.gov/projects/construction/Construction%20Forms/Subcontract%20Approval%20Form%20Rev.%202012.zip

JC-1 *Joint Check Notification Form* - Form and procedures for joint check notification. The form acts as a written joint check agreement among the parties providing full and prompt

disclosure of the expected use of joint checks.
http://connect.ncdot.gov/projects/construction/Construction%20Forms/Joint%20Check%20Notification%20Form.pdf

Letter of Intent - Form signed by the Contractor and the DBE subcontractor, manufacturer or regular dealer that affirms that a portion of said contract is going to be performed by the signed DBE for the amount listed at the time of bid.
http://connect.ncdot.gov/letting/LetCentral/Letter%20of%20Intent%20to%20Perform%20as%20a%20Subcontractor.pdf

Listing of DBE Subcontractors Form - Form for entering DBE subcontractors on a project that will meet this DBE goal. This form is for paper bids only.
http://connect.ncdot.gov/municipalities/Bid%20Proposals%20for%20LGA%20Content/08%20DBE%20Subcontractors%20(Federal).docx

Subcontractor Quote Comparison Sheet - Spreadsheet for showing all subcontractor quotes in the work areas where DBEs quoted on the project. This sheet is submitted with good faith effort packages.
http://connect.ncdot.gov/business/SmallBusiness/Documents/DBE%20Subcontractor%20Quote%20Comparison%20Example.xls

DBE Goal

The following DBE goal for participation by Disadvantaged Business Enterprises is established for this contract:

Disadvantaged Business Enterprises **0.0** %

(A) *If the DBE goal is more than zero*, the Contractor shall exercise all necessary and reasonable steps to ensure that DBEs participate in at least the percent of the contract as set forth above as the DBE goal.

(B) *If the DBE goal is zero*, the Contractor shall make an effort to recruit and use DBEs during the performance of the contract. Any DBE participation obtained shall be reported to the Department.

Directory of Transportation Firms (Directory)

Real-time information is available about firms doing business with the Department and firms that are certified through NCUCP in the Directory of Transportation Firms. Only firms identified in the Directory as DBE certified shall be used to meet the DBE goal. The Directory can be found at the following link. https:// www.ebs.nc.gov/VendorDirectory/default.html

The listing of an individual firm in the directory shall not be construed as an endorsement of the firm's capability to perform certain work.

Listing of DBE Subcontractors

At the time of bid, bidders shall submit all DBE participation that they anticipate to use during the life of the contract. Only those identified to meet the DBE goal will be considered committed, even though the listing shall include both committed DBE subcontractors and additional DBE subcontractors. Additional DBE subcontractor participation submitted at the time of bid will be used toward the Department's overall race-neutral goal. Only those firms with current DBE certification at the time of bid opening will be acceptable for listing in the bidder's submittal of DBE participation. The Contractor shall indicate the following required information:

(A) Electronic Bids

Bidders shall submit a listing of DBE participation in the appropriate section of Expedite, the bidding software of Bid Express®.

(1) Submit the names and addresses of DBE firms identified to participate in the contract. If the bidder uses the updated listing of DBE firms shown in Expedite, the bidder may use the dropdown menu to access the name and address of the DBE firm.

(2) Submit the contract line numbers of work to be performed by each DBE firm. When no figures or firms are entered, the bidder will be considered to have no DBE participation.

(3) The bidder shall be responsible for ensuring that the DBE is certified at the time of bid by checking the Directory of Transportation Firms. If the firm is not certified at the time of the bid-letting, that DBE's participation will not count towards achieving the DBE goal.

(B) Paper Bids

(1) *If the DBE goal is more than zero,*

(a) Bidders, at the time the bid proposal is submitted, shall submit a listing of DBE participation, including the names and addresses on *Listing of DBE Subcontractors* contained elsewhere in the contract documents in order for the bid to be considered responsive. Bidders shall indicate the total dollar value of the DBE participation for the contract.

(b) If bidders have no DBE participation, they shall indicate this on the *Listing of DBE Subcontractors* by entering the word "None" or the number "0." This form shall be completed in its entirety. **Blank forms will not be deemed to represent zero participation**. Bids submitted that do not have DBE participation indicated on the appropriate form will not be read publicly during the opening of bids. The Department will not

consider these bids for award and the proposal will be rejected.

(c) The bidder shall be responsible for ensuring that the DBE is certified at the time of bid by checking the Directory of Transportation Firms. If the firm is not certified at the time of the bid-letting, that DBE's participation will not count towards achieving the DBE goal.

(2) *If the DBE goal is zero*, entries on the *Listing of DBE Subcontractors* are not required, however any DBE participation that is achieved during the project shall be reported in accordance with requirements contained elsewhere in the special provision.

DBE Prime Contractor

When a certified DBE firm bids on a contract that contains a DBE goal, the DBE firm is responsible for meeting the goal or making good faith efforts to meet the goal, just like any other bidder. In most cases, a DBE bidder on a contract will meet the DBE goal by virtue of the work it performs on the contract with its own forces. However, all the work that is performed by the DBE bidder and any other DBE subcontractors will count toward the DBE goal. The DBE bidder shall list itself along with any DBE subcontractors, if any, in order to receive credit toward the DBE goal.

For example, if the DBE goal is 45% and the DBE bidder will only perform 40% of the contract work, the prime will list itself at 40%, and the additional 5% shall be obtained through additional DBE participation with DBE subcontractors or documented through a good faith effort.

DBE prime contractors shall also follow Sections A or B listed under *Listing of DBE Subcontractor* just as a non-DBE bidder would.

Written Documentation – Letter of Intent

The bidder shall submit written documentation for each DBE that will be used to meet the DBE goal of the contract, indicating the bidder's commitment to use the DBE in the contract. This documentation shall be submitted on the Department's form titled *Letter of Intent*.

The documentation shall be received in the office of the Engineer no later than 2:00 p.m. of the fifth calendar day following opening of bids, unless the fifth day falls on Saturday, Sunday or an official state holiday. In that situation, it is due in the office of the Engineer no later than 10:00 a.m. on the next official state business day.

If the bidder fails to submit the Letter of Intent from each committed DBE to be used toward the DBE goal, or if the form is incomplete (i.e. both signatures are not present), the DBE participation will not count toward meeting the DBE goal. If the lack of this participation drops the commitment below the DBE goal, the Contractor shall submit evidence of good faith efforts, completed in its entirety, to the Engineer no later than 2:00 p.m. on the eighth calendar day following opening of bids, unless the eighth day falls on Saturday, Sunday or an official state

holiday. In that situation, it is due in the office of the Engineer no later than 10:00 a.m. on the next official state business day.

Submission of Good Faith Effort

If the bidder fails to meet or exceed the DBE goal the apparent lowest responsive bidder shall submit to the Department documentation of adequate good faith efforts made to reach the DBE goal.

One complete set and one copy of this information shall be received in the office of the Engineer no later than 2:00 p.m. of the fifth calendar day following opening of bids, unless the fifth day falls on Saturday, Sunday or an official state holiday. In that situation, it is due in the office of the Engineer no later than 10:00 a.m. on the next official state business day.

Note: Where the information submitted includes repetitious solicitation letters, it will be acceptable to submit a representative letter along with a distribution list of the firms that were solicited. Documentation of DBE quotations shall be a part of the good faith effort submittal. This documentation may include written subcontractor quotations, telephone log notations of verbal quotations, or other types of quotation documentation.

Consideration of Good Faith Effort for Projects with DBE Goals More Than Zero

Adequate good faith efforts mean that the bidder took all necessary and reasonable steps to achieve the goal which, by their scope, intensity, and appropriateness, could reasonably be expected to obtain sufficient DBE participation. Adequate good faith efforts also mean that the bidder actively and aggressively sought DBE participation. Mere *pro forma* efforts are not considered good faith efforts.

The Department will consider the quality, quantity, and intensity of the different kinds of efforts a bidder has made. Listed below are examples of the types of actions a bidder will take in making a good faith effort to meet the goal and are not intended to be exclusive or exhaustive, nor is it intended to be a mandatory checklist.

(A) Soliciting through all reasonable and available means (e.g. attendance at pre-bid meetings, advertising, written notices, use of verifiable electronic means through the use of the NCDOT Directory of Transportation Firms) the interest of all certified DBEs who have the capability to perform the work of the contract. The bidder must solicit this interest within at least 10 days prior to bid opening to allow the DBEs to respond to the solicitation. Solicitation shall provide the opportunity to DBEs within the Division and surrounding Divisions where the project is located. The bidder must determine with certainty if the DBEs are interested by taking appropriate steps to follow up initial solicitations.

(B) Selecting portions of the work to be performed by DBEs in order to increase the likelihood that the DBE goals will be achieved.

(1) Where appropriate, break out contract work items into economically feasible units to facilitate DBE participation, even when the prime contractor might otherwise prefer to perform these work items with its own forces.

(2) Negotiate with subcontractors to assume part of the responsibility to meet the contract DBE goal when the work to be sublet includes potential for DBE participation (2nd and 3rd tier subcontractors).

(C) Providing interested DBEs with adequate information about the plans, specifications, and requirements of the contract in a timely manner to assist them in responding to a solicitation.

(D) (1) Negotiating in good faith with interested DBEs. It is the bidder's responsibility to make a portion of the work available to DBE subcontractors and suppliers and to select those portions of the work or material needs consistent with the available DBE subcontractors and suppliers, so as to facilitate DBE participation. Evidence of such negotiation includes the names, addresses, and telephone numbers of DBEs that were considered; a description of the information provided regarding the plans and specifications for the work selected for subcontracting; and evidence as to why additional agreements could not be reached for DBEs to perform the work.

(2) A bidder using good business judgment would consider a number of factors in negotiating with subcontractors, including DBE subcontractors, and would take a firm's price and capabilities as well as contract goals into consideration. However, the fact that there may be some additional costs involved in finding and using DBEs is not in itself sufficient reason for a bidder's failure to meet the contract DBE goal, as long as such costs are reasonable. Also, the ability or desire of a prime contractor to perform the work of a contract with its own organization does not relieve the bidder of the responsibility to make good faith efforts. Bidding contractors are not, however, required to accept higher quotes from DBEs if the price difference is excessive or unreasonable.

(E) Not rejecting DBEs as being unqualified without sound reasons based on a thorough investigation of their capabilities. The bidder's standing within its industry, membership in specific groups, organizations, or associates and political or social affiliations (for example, union vs. non-union employee status) are not legitimate causes for the rejection or non-solicitation of bids in the bidder's efforts to meet the project goal.

(F) Making efforts to assist interested DBEs in obtaining bonding, lines of credit, or insurance as required by the recipient or bidder.

(G) Making efforts to assist interested DBEs in obtaining necessary equipment, supplies,

materials, or related assistance or services.

(H) Effectively using the services of available minority/women community organizations; minority/women contractors' groups; Federal, State, and local minority/women business assistance offices; and other organizations as allowed on a case-by-case basis to provide assistance in the recruitment and placement of DBEs. Contact within 7 days from the bid opening the Business Opportunity and Work Force Development Unit at DBE@ncdot.gov to give notification of the bidder's inability to get DBE quotes.

(I) Any other evidence that the bidder submits which shows that the bidder has made reasonable good faith efforts to meet the DBE goal.

In addition, the Department may take into account the following:

(1) Whether the bidder's documentation reflects a clear and realistic plan for achieving the DBE goal.

(2) The bidders' past performance in meeting the DBE goals.

(3) The performance of other bidders in meeting the DBE goal. For example, when the apparent successful bidder fails to meet the DBE goal, but others meet it, you may reasonably raise the question of whether, with additional reasonable efforts the apparent successful bidder could have met the goal. If the apparent successful bidder fails to meet the DBE goal, but meets or exceeds the average DBE participation obtained by other bidders, the Department may view this, in conjunction with other factors, as evidence of the apparent successful bidder having made a good faith effort.

If the Department does not award the contract to the apparent lowest responsive bidder, the Department reserves the right to award the contract to the next lowest responsive bidder that can satisfy to the Department that the DBE goal can be met or that an adequate good faith effort has been made to meet the DBE goal.

Non-Good Faith Appeal

The Engineer will notify the contractor verbally and in writing of non-good faith. A contractor may appeal a determination of non-good faith made by the Goal Compliance Committee. If a contractor wishes to appeal the determination made by the Committee, they shall provide written notification to the Engineer. The appeal shall be made within 2 business days of notification of the determination of non-good faith.

Counting DBE Participation Toward Meeting DBE Goal

(A) Participation

The total dollar value of the participation by a committed DBE will be counted toward

the contract goal requirement. The total dollar value of participation by a committed DBE will be based upon the value of work actually performed by the DBE and the actual payments to DBE firms by the Contractor.

(B) Joint Checks

Prior notification of joint check use shall be required when counting DBE participation for services or purchases that involves the use of a joint check. Notification shall be through submission of Form JC-1 *(Joint Check Notification Form)* and the use of joint checks shall be in accordance with the Department's Joint Check Procedures.

(C) Subcontracts (Non-Trucking)

A DBE may enter into subcontracts. Work that a DBE subcontracts to another DBE firm may be counted toward the contract goal requirement. Work that a DBE subcontracts to a non-DBE firm does <u>not</u> count toward the contract goal requirement. If a DBE contractor or subcontractor subcontracts a significantly greater portion of the work of the contract than would be expected on the basis of standard industry practices, it shall be presumed that the DBE is not performing a commercially useful function. The DBE may present evidence to rebut this presumption to the Department. The Department's decision on the rebuttal of this presumption is subject to review by the Federal Highway Administration but is not administratively appealable to USDOT.

(D) Joint Venture

When a DBE performs as a participant in a joint venture, the Contractor may count toward its contract goal requirement a portion of the total value of participation with the DBE in the joint venture, that portion of the total dollar value being a distinct clearly defined portion of work that the DBE performs with its forces.

(E) Suppliers

A contractor may count toward its DBE requirement 60 percent of its expenditures for materials and supplies required to complete the contract and obtained from a DBE regular dealer and 100 percent of such expenditures from a DBE manufacturer.

(F) Manufacturers and Regular Dealers

A contractor may count toward its DBE requirement the following expenditures to DBE firms that are not manufacturers or regular dealers:

(1) The fees or commissions charged by a DBE firm for providing a *bona fide* service, such as professional, technical, consultant, or managerial services, or for providing bonds or insurance specifically required for the performance of a DOT-assisted contract, provided the fees or commissions are determined to be reasonable and not excessive as compared with fees and commissions customarily

allowed for similar services.

(2) With respect to materials or supplies purchased from a DBE, which is neither a manufacturer nor a regular dealer, count the entire amount of fees or commissions charged for assistance in the procurement of the materials and supplies, or fees or transportation charges for the delivery of materials or supplies required on a job site (but not the cost of the materials and supplies themselves), provided the fees are determined to be reasonable and not excessive as compared with fees customarily allowed for similar services.

Commercially Useful Function

(A) DBE Utilization

The Contractor may count toward its contract goal requirement only expenditures to DBEs that perform a commercially useful function in the work of a contract. A DBE performs a commercially useful function when it is responsible for execution of the work of the contract and is carrying out its responsibilities by actually performing, managing, and supervising the work involved. To perform a commercially useful function, the DBE shall also be responsible with respect to materials and supplies used on the contract, for negotiating price, determining quality and quantity, ordering the material and installing (where applicable) and paying for the material itself. To determine whether a DBE is performing a commercially useful function, the Department will evaluate the amount of work subcontracted, industry practices, whether the amount the firm is to be paid under the contract is commensurate with the work it is actually performing and the DBE credit claimed for its performance of the work, and any other relevant factors.

(B) DBE Utilization in Trucking

The following factors will be used to determine if a DBE trucking firm is performing a commercially useful function:

(1) The DBE shall be responsible for the management and supervision of the entire trucking operation for which it is responsible on a particular contract, and there shall not be a contrived arrangement for the purpose of meeting DBE goals.

(2) The DBE shall itself own and operate at least one fully licensed, insured, and operational truck used on the contract.

(3) The DBE receives credit for the total value of the transportation services it provides on the contract using trucks it owns, insures, and operates using drivers it employs.

(4) The DBE may subcontract the work to another DBE firm, including an owner-operator who is certified as a DBE. The DBE who subcontracts work to

another DBE receives credit for the total value of the transportation services the subcontracted DBE provides on the contract.

(5) The DBE may also subcontract the work to a non-DBE firm, including from an owner-operator. The DBE who subcontracts the work to a non-DBE is entitled to credit for the total value of transportation services provided by the non-DBE subcontractor not to exceed the value of transportation services provided by DBE-owned trucks on the contract. Additional participation by non-DBE subcontractors receives credit only for the fee or commission it receives as a result of the subcontract arrangement. The value of services performed under subcontract agreements between the DBE and the Contractor will not count towards the DBE contract requirement.

(6) A DBE may lease truck(s) from an established equipment leasing business open to the general public. The lease must indicate that the DBE has exclusive use of and control over the truck. This requirement does not preclude the leased truck from working for others during the term of the lease with the consent of the DBE, so long as the lease gives the DBE absolute priority for use of the leased truck. This type of lease may count toward the DBE's credit as long as the driver is under the DBE's payroll.

(7) Subcontracted/leased trucks shall display clearly on the dashboard the name of the DBE that they are subcontracted/leased to and their own company name if it is not identified on the truck itself. Magnetic door signs are not permitted.

DBE Replacement

When a Contractor has relied on a commitment to a DBE firm (or an approved substitute DBE firm) to meet all or part of a contract goal requirement, the contractor shall not terminate the DBE for convenience. This includes, but is not limited to, instances in which the Contractor seeks to perform the work of the terminated subcontractor with another DBE subcontractor, a non-DBE subcontractor, or with the Contractor's own forces or those of an affiliate. A DBE may only be terminated after receiving the Engineer's written approval based upon a finding of good cause for the termination. The prime contractor must give the DBE firm five (5) calendar days to respond to the prime contractor's notice of termination and advise the prime contractor and the Department of the reasons, if any, why the firm objects to the proposed termination of its subcontract and why the Department should not approve the action.

All requests for replacement of a committed DBE firm shall be submitted to the Engineer for approval on Form RF-1 *(DBE Replacement Request).* If the Contractor fails to follow this procedure, the Contractor may be disqualified from further bidding for a period of up to 6 months.

The Contractor shall comply with the following for replacement of a committed DBE:

(A) Performance Related Replacement

When a committed DBE is terminated for good cause as stated above, an additional DBE that was submitted at the time of bid may be used to fulfill the DBE commitment. A good faith effort will only be required for removing a committed DBE if there were no additional DBEs submitted at the time of bid to cover the same amount of work as the DBE that was terminated.

If a replacement DBE is not found that can perform at least the same amount of work as the terminated DBE, the Contractor shall submit a good faith effort documenting the steps taken. Such documentation shall include, but not be limited to, the following:

(1) Copies of written notification to DBEs that their interest is solicited in contracting the work defaulted by the previous DBE or in subcontracting other items of work in the contract.

(2) Efforts to negotiate with DBEs for specific subbids including, at a minimum:

(a) The names, addresses, and telephone numbers of DBEs who were contacted.
(b) A description of the information provided to DBEs regarding the plans and specifications for portions of the work to be performed.

(3) A list of reasons why DBE quotes were not accepted.

(4) Efforts made to assist the DBEs contacted, if needed, in obtaining bonding or insurance required by the Contractor.

(B) Decertification Replacement

(1) When a committed DBE is decertified by the Department after the SAF (*Subcontract Approval Form*) has been received by the Department, the Department will not require the Contractor to solicit replacement DBE participation equal to the remaining work to be performed by the decertified firm. The participation equal to the remaining work performed by the decertified firm will count toward the contract goal requirement.
(2) When a committed DBE is decertified prior to the Department receiving the SAF (*Subcontract Approval Form*) for the named DBE firm, the Contractor shall take all necessary and reasonable steps to replace the DBE subcontractor with another DBE subcontractor to perform at least the same amount of work to meet the DBE goal requirement. If a DBE firm is not found to do the same amount of work, a good faith effort must be submitted to NCDOT (see A herein for required documentation).

Changes in the Work

When the Engineer makes changes that result in the reduction or elimination of work to be performed by a committed DBE, the Contractor will not be required to seek additional participation. When the Engineer makes changes that result in additional work to be performed by a DBE based upon the Contractor's commitment, the DBE shall participate in additional work to the same extent as the DBE participated in the original contract work.

When the Engineer makes changes that result in extra work, which has more than a minimal impact on the contract amount, the Contractor shall seek additional participation by DBEs unless otherwise approved by the Engineer.

When the Engineer makes changes that result in an alteration of plans or details of construction, and a portion or all of the work had been expected to be performed by a committed DBE, the Contractor shall seek participation by DBEs unless otherwise approved by the Engineer.

When the Contractor requests changes in the work that result in the reduction or elimination of work that the Contractor committed to be performed by a DBE, the Contractor shall seek additional participation by DBEs equal to the reduced DBE participation caused by the changes.

Reports and Documentation

A SAF (*Subcontract Approval Form*) shall be submitted for all work which is to be performed by a DBE subcontractor. The Department reserves the right to require copies of actual subcontract agreements involving DBE subcontractors.

When using transportation services to meet the contract commitment, the Contractor shall submit a proposed trucking plan in addition to the SAF. The plan shall be submitted prior to beginning construction on the project. The plan shall include the names of all trucking firms proposed for use, their certification type(s), the number of trucks owned by the firm, as well as the individual truck identification numbers, and the line item(s) being performed.

Within 30 calendar days of entering into an agreement with a DBE for materials, supplies or services, not otherwise documented by the SAF as specified above, the Contractor shall furnish the Engineer a copy of the agreement. The documentation shall also indicate the percentage (60% or 100%) of expenditures claimed for DBE credit.

Reporting Disadvantaged Business Enterprise Participation

The Contractor shall provide the Engineer with an accounting of payments made to all DBE firms, including material suppliers and contractors at all levels (prime, subcontractor, or second tier subcontractor). This accounting shall be furnished to the Engineer for any given month by the end of the following month. Failure to submit this information accordingly may result in the following action:

(A) Withholding of money due in the next partial pay estimate; or

(B) Removal of an approved contractor from the prequalified bidders' list or the removal of other entities from the approved subcontractors list.

While each contractor (prime, subcontractor, 2nd tier subcontractor) is responsible for accurate accounting of payments to DBEs, it shall be the prime contractor's responsibility to report all monthly and final payment information in the correct reporting manner.

Failure on the part of the Contractor to submit the required information in the time frame specified may result in the disqualification of that contractor and any affiliate companies from further bidding until the required information is submitted.

Failure on the part of any subcontractor to submit the required information in the time frame specified may result in the disqualification of that contractor and any affiliate companies from being approved for work on future projects until the required information is submitted.

Contractors reporting transportation services provided by non-DBE lessees shall evaluate the value of services provided during the month of the reporting period only.

At any time, the Engineer can request written verification of subcontractor payments.

The Contractor shall report the accounting of payments through the Department's DBE Payment Tracking System.

Failure to Meet Contract Requirements

Failure to meet contract requirements in accordance with Subarticle 102-15(J) of the *2018 Standard Specifications* may be cause to disqualify the Contractor.

CERTIFICATION FOR FEDERAL-AID CONTRACTS:

(3-21-90) SP1 G85

The prospective participant certifies, by signing and submitting this bid or proposal, to the best of his or her knowledge and belief, that:

(A) No Federal appropriated funds have been paid or will be paid, by or on behalf of the undersigned, to any person for influencing or attempting to influence an officer or employee of any Federal agency, a Member of Congress, an officer or employee of Congress, or an employee of a Member of Congress in connection with the awarding of any Federal contract, the making of any Federal grant, the making of any Federal loan, the entering into of any cooperative agreement, and the extension, continuation, renewal, amendment, or modification of any Federal contract, grant, loan, or cooperative agreement.

(B) If any funds other than Federal appropriated funds have been paid or will be paid to any person for influencing or attempting to influence an officer or employee of any Federal agency, a Member of Congress, an officer or employee of Congress, or an employee of

a Member of Congress in connection with this Federal contract, grant, loan, or cooperative agreement, the undersigned shall complete and submit Standard Form-LLL, *Disclosure Form to Report Lobbying*, in accordance with its instructions.

This certification is a material representation of fact upon which reliance was placed when this transaction was made or entered into. Submission of this certification is a prerequisite for making or entering into this transaction imposed by *Section 1352, Title 31, U.S. Code*. Any person who fails to file the required certification shall be subject to a civil penalty of not less than $10,000 and not more than $100,000 for each such failure.

The prospective participant also agrees by submitting his or her bid or proposal that he or she shall require that the language of this certification be included in all lower tier subcontracts, which exceed $100,000 and that all such subrecipients shall certify and disclose accordingly.

CONTRACTOR'S LICENSE REQUIREMENTS:

(7-1-95) 102-14 SP1 G88

If the successful bidder does not hold the proper license to perform any plumbing, heating, air conditioning, or electrical work in this contract, he will be required to sublet such work to a contractor properly licensed in accordance with *Article 2 of Chapter 87 of the General Statutes* (licensing of heating, plumbing, and air conditioning contractors) and *Article 4 of Chapter 87* of the *General Statutes* (licensing of electrical contractors).

U.S. DEPARTMENT OF TRANSPORTATION HOTLINE:

(11-22-94) 108-5 SP1 G100

To report bid rigging activities call: **1-800-424-9071**

The U.S. Department of Transportation (DOT) operates the above toll-free hotline Monday through Friday, 8:00 a.m. to 5:00 p.m. eastern time. Anyone with knowledge of possible bid rigging, bidder collusion, or other fraudulent activities should use the hotline to report such activities.

The hotline is part of the DOT's continuing effort to identify and investigate highway construction contract fraud and abuse is operated under the direction of the DOT Inspector General. All information will be treated confidentially and caller anonymity will be respected.

CARGO PREFERENCE ACT:

(2-16-16)

Privately owned United States-flag commercial vessels transporting cargoes are subject to the Cargo Preference Act (CPA) of 1954 requirements and regulations found in 46 CFR 381.7. Contractors are directed to clause (b) of 46 CFR 381.7 as follows:

(b) Contractor and Subcontractor Clauses. "Use of United States-flag vessels: The contractor agrees-

" (1) To utilize privately owned United States-flag commercial vessels to ship at least 50 percent of the gross tonnage (computed separately for dry bulk carriers, dry cargo liners, and tankers) involved, whenever shipping any equipment, material, or commodities pursuant to this contract, to the extent such vessels are available at fair and reasonable rates for United States-flag commercial vessels.

(2) To furnish within 20 days following the date of loading for shipments originating within the United States or within 30 working days following the date of loading for shipments originating outside the United States a legible copy of a rated, 'on-board' commercial ocean bill-of-lading in English for each shipment of cargo described in paragraph (b) (1) of this section to both the Contracting Officer (through the prime contractor in the case of subcontractor bills-of-lading) and to the Division of National Cargo, Office of Market Development, Maritime Administration, Washington, DC 20590.

(3) To insert the substance of the provisions of this clause in all subcontracts issued pursuant to this contract."

SUBSURFACE INFORMATION:

(7-1-95) 450 SP1 G112 A

There is **no** subsurface information available on this project. The Contractor shall make his own investigation of subsurface conditions.

BIDS OVER LIMIT:

(08-01-16) SPD 01-400

In accordance with GS 136-28.1(b), if the total bid amount of the contract exceeds $5.0 million, the bid will not be considered for award.

DIVISION LET CONTRACT PREQUALIFICATION:

(07-01-14)(12-1-16) SPD 01-410

Any firm that wishes to bid as a prime contractor shall be prequalified as a Bidder or PO Prime Contractor prior to submitting a bid. Information regarding prequalification can be found at: https://connect.ncdot.gov/business/Prequal/Pages/default.aspx.

Prior to performing the work, the prime contractor and/or subcontractor(s) shall be prequalified in the work code(s) which are identified as work items in the prime contractor's construction progress schedule that they will complete themselves. Any contractor identified as working outside their expertise may be considered in default of contract.

CONTRACTOR CLAIM SUBMITTAL FORM:

(2-12-14) 104-3 SPD 01-440

If the Contractor elects to file a written claim or requests an extension of contract time, it shall be submitted on the *Contractor Claim Submittal Form (CCSF)* available through the Construction Unit or at https://connect.ncdot.gov/projects/construction/Pages/Construction-Resources.aspx as Form CCSF under Construction Forms.

Any claims for additional compensation and/or extensions of the completion date shall be submitted to the Division Engineer in writing, with detailed justification, prior to submitting the final invoice payment. Once an invoice is received and accepted that is marked as "Final", the Contractor shall be barred from recovery.

PROJECT SPECIAL PROVISIONS

ROADWAY

BURNING RESTRICTIONS:

(7-1-95) 200, 210, 215

Open burning is not permitted on any portion of the right-of-way limits established for this project. Do not burn the clearing, grubbing or demolition debris designated for disposal and generated from the project at locations within the project limits, off the project limits or at any waste or borrow sites in this county. Dispose of the clearing, grubbing and demolition debris by means other than burning, according to state or local rules and regulations.

LUMP SUM PAYMENT FOR TRAFFIC CONTROL:

The Contractor shall maintain traffic during construction and shall provide, install and maintain all traffic control devices as shown in the *2018 Roadway Standard Drawings* and *2018 Standard Specifications for Roads and Structures* or as directed by the Engineer.

The lump sum price bid for traffic control shall include but not be limited to signs (portable, stationary, or barricade), which includes detour signing, Truck Mounted Attenuators (TMA), Changeable Message Signs (CMS), Flashing Arrow Boards (FAB), Pilot Vehicle, Flaggers, Cones, Skinny Drums and Drums and all labor, tools, equipment and incidentals necessary to furnish, install, maintain and remove traffic control devices when no longer required.

Basis of Payment

Partial payments will be made on each payment estimate based on the following: Fifty percent of the contract lump sum price bid will be paid on the first monthly estimate and the remaining 50% of the contract lump sum price bid will be paid on each subsequent estimate based on the percent of the project completed.

Payment will be made under:

Pay Item	Pay Unit
Traffic Control	L.S.

STANDARD SPECIAL PROVISION
AVAILABILITY OF FUNDS – TERMINATION OF CONTRACTS

(5-20-08) Z-2

General Statute 143C-6-11. (h) Highway Appropriation is hereby incorporated verbatim in this contract as follows:

(h) Amounts Encumbered. – Transportation project appropriations may be encumbered in the amount of allotments made to the Department of Transportation by the Director for the estimated payments for transportation project contract work to be performed in the appropriation fiscal year. The allotments shall be multiyear allotments and shall be based on estimated revenues and shall be subject to the maximum contract authority contained in *General Statute 143C-6-11(c)*. Payment for transportation project work performed pursuant to contract in any fiscal year other than the current fiscal year is subject to appropriations by the General Assembly. Transportation project contracts shall contain a schedule of estimated completion progress, and any acceleration of this progress shall be subject to the approval of the Department of Transportation provided funds are available. The State reserves the right to terminate or suspend any transportation project contract, and any transportation project contract shall be so terminated or suspended if funds will not be available for payment of the work to be performed during that fiscal year pursuant to the contract. In the event of termination of any contract, the contractor shall be given a written notice of termination at least 60 days before completion of scheduled work for which funds are available. In the event of termination, the contractor shall be paid for the work already performed in accordance with the contract specifications.

Payment will be made on any contract terminated pursuant to the special provision in accordance with Subarticle 108-13(D) of the *2018 Standard Specifications*.

STANDARD SPECIAL PROVISION

ERRATA

(2-12-18) Z-4

Revise the *2018 Standard Specifications* as follows:

Division 7

Page 7-27, line 4, Article 725-1 MEASUREMENT AND PAYMENT, replace article number "725-1" with "724-4".

Page 7-28, line 10, Article 725-1 MEASUREMENT AND PAYMENT, replace article number "725-1" with "725-3".

Division 10

Page 10-162, line 1, Article 1080-50 PAINT FOR VERTICAL MARKERS, replace article number "1080-50" with "1080-10".

Page 10-162, line 5, Article 1080-61 EPOXY RESIN FOR REINFORCING STEEL, replace article number "1080-61" with "1080-11".

Page 10-162, line 22, Article 1080-72 ABRASIVE MATERIALS FOR BLAST CLEANING STEEL, replace article number "1080-72" with "1080-12".

Page 10-163, line 25, Article 1080-83 FIELD PERFORMANCE AND SERVICES, replace article number "1080-83" with "1080-13".

STANDARD SPECIAL PROVISION

PLANT AND PEST QUARANTINES
(Imported Fire Ant, Gypsy Moth, Witchweed, Emerald Ash Borer, And Other Noxious Weeds)

(3-18-03) (Rev. 12-20-16) Z-04a

Within Quarantined Area

This project may be within a county regulated for plant and/or pests. If the project or any part of the Contractor's operations is located within a quarantined area, thoroughly clean all equipment prior to moving out of the quarantined area. Comply with federal/state regulations by obtaining a certificate or limited permit for any regulated article moving from the quarantined area.

Originating in a Quarantined County

Obtain a certificate or limited permit issued by the N.C. Department of Agriculture/United States Department of Agriculture. Have the certificate or limited permit accompany the article when it arrives at the project site.

Contact

Contact the N.C. Department of Agriculture/United States Department of Agriculture at 1-800-206-9333, 919-707-3730, or *http://www.ncagr.gov/plantindustry/* to determine those specific project sites located in the quarantined area or for any regulated article used on this project originating in a quarantined county.

Regulated Articles Include

1. Soil, sand, gravel, compost, peat, humus, muck, and decomposed manure, separately or with other articles. This includes movement of articles listed above that may be associated with cut/waste, ditch pulling, and shoulder cutting.
2. Plants with roots including grass sod.
3. Plant crowns and roots.
4. Bulbs, corms, rhizomes, and tubers of ornamental plants.
5. Hay, straw, fodder, and plant litter of any kind.
6. Clearing and grubbing debris.
7. Used agricultural cultivating and harvesting equipment.
8. Used earth-moving equipment.
9. Any other products, articles, or means of conveyance, of any character, if determined by an inspector to present a hazard of spreading imported fire ant, gypsy moth, witchweed, emerald ash borer, or other noxious weeds.

STANDARD SPECIAL PROVISION

MINORITY AND FEMALE EMPLOYMENT REQUIREMENTS

Z-7

NOTICE OF REQUIREMENTS FOR AFFIRMATIVE ACTION TO ENSURE EQUAL EMPLOYMENT OPPORTUNITY (*EXECUTIVE NUMBER 11246*)

1. The goals and timetables for minority and female participation, expressed in percentage terms for the Contractor's aggregate workforce in each trade on all construction work in the covered area, see as shown on the attached sheet entitled "Employment Goals for Minority and Female participation".

These goals are applicable to all the Contractor's construction work (whether or not it is Federal or federally assisted) performed in the covered area. If the Contractor performs construction work in a geographical area located outside of the covered area, it shall apply the goals established for such geographical area where the work is actually performed. With regard to this second area, the Contractor also is subject to the goals for both its federally involved and nonfederally involved construction.

The Contractor's compliance with the Executive Order and the regulations in *41 CFR Part 60-4* shall be based on its implementation of the Equal Opportunity Clause, specific affirmative action obligations required by the specifications set forth in *41 CFR 60-4.3(a)*, and its effort to meet the goals. The hours of minority and female employment and training must be substantially uniform throughout the length of the contract, and in each trade and the Contractor shall make a good faith effort to employ minorities and women evenly on each of its projects. The transfer of minority or female employees or trainees from Contractor to Contractor or from project to project for the sole purpose of meeting the Contractor's goals shall be a violation of the contract, the executive Order and the regulations *in 41 CFR Part 60-4*. Compliance with the goals will be measured against the total work hours performed.

2. As used in this Notice and in the contract resulting from this solicitation, the "covered area" is the county or counties shown on the cover sheet of the proposal form and contract.

EMPLOYMENT GOALS FOR MINORITY AND FEMALE PARTICIPATION

Economic Areas

Area 023 29.7%
Bertie County
Camden County
Chowan County
Gates County
Hertford County
Pasquotank County
Perquimans County

Area 024 31.7%
Beaufort County
Carteret County
Craven County
Dare County
Edgecombe County
Green County
Halifax County
Hyde County
Jones County
Lenoir County
Martin County
Nash County
Northampton County
Pamlico County
Pitt County
Tyrrell County
Washington County
Wayne County
Wilson County

Area 025 23.5%
Columbus County
Duplin County
Onslow County
Pender County

Area 026 33.5%
Bladen County
Hoke County
Richmond County
Robeson County
Sampson County
Scotland County

Area 027 24.7%
Chatham County
Franklin County
Granville County
Harnett County
Johnston County
Lee County
Person County
Vance County
Warren County

Area 028 15.5%
Alleghany County
Ashe County
Caswell County
Davie County
Montgomery County
Moore County
Rockingham County
Surry County
Watauga County
Wilkes County

Area 029 15.7%
Alexander County
Anson County
Burke County
Cabarrus County
Caldwell County
Catawba County
Cleveland County
Iredell County
Lincoln County
Polk County
Rowan County
Rutherford County
Stanly County

Area 0480 8.5%
Buncombe County
Madison County

Area 030 6.3%
Avery County
Cherokee County
Clay County
Graham County
Haywood County
Henderson County
Jackson County
McDowell County
Macon County
Mitchell County
Swain County
Transylvania County
Yancey County

SMSA Areas

Area 5720 26.6%
Currituck County

Area 9200 20.7%
Brunswick County
New Hanover County

Area 2560 24.2%
Cumberland County

Area 6640 22.8%
Durham County
Orange County
Wake County

Area 1300 16.2%
Alamance County

Area 3120 16.4%
Davidson County
Forsyth County
Guilford County
Randolph County
Stokes County
Yadkin County

Area 1520 18.3%
Gaston County
Mecklenburg County
Union County

Goals for Female

Participation in Each Trade

(Statewide) 6.9%

STANDARD SPECIAL PROVISION

REQUIRED CONTRACT PROVISIONS FEDERAL - AID CONSTRUCTION CONTRACTS

FHWA - 1273 Electronic Version - May 1, 2012 Z-8

I. General
II. Nondiscrimination
III. Nonsegregated Facilities
IV. Davis-Bacon and Related Act Provisions
V. Contract Work Hours and Safety Standards Act Provisions
VI. Subletting or Assigning the Contract
VII. Safety: Accident Prevention
VIII. False Statements Concerning Highway Projects
IX. Implementation of Clean Air Act and Federal Water Pollution Control Act
X. Compliance with Governmentwide Suspension and Debarment Requirements
XI. Certification Regarding Use of Contract Funds for Lobbying

ATTACHMENTS

A. Employment and Materials Preference for Appalachian Development Highway System or Appalachian Local Access Road Contracts (included in Appalachian contracts only)

I. GENERAL

1. Form FHWA-1273 must be physically incorporated in each construction contract funded under Title 23 (excluding emergency contracts solely intended for debris removal). The contractor (or subcontractor) must insert this form in each subcontract and further require its inclusion in all lower tier subcontracts (excluding purchase orders, rental agreements and other agreements for supplies or services).

   The applicable requirements of Form FHWA-1273 are incorporated by reference for work done under any purchase order, rental agreement or agreement for other services. The prime contractor shall be responsible for compliance by any subcontractor, lower-tier subcontractor or service provider.

   Form FHWA-1273 must be included in all Federal-aid design-build contracts, in all subcontracts and in lower tier subcontracts (excluding subcontracts for design services, purchase orders, rental agreements and other agreements for supplies or services). The design-builder shall be responsible for compliance by any subcontractor, lower-tier subcontractor or service provider.

   Contracting agencies may reference Form FHWA-1273 in bid proposal or request for proposal documents, however, the Form FHWA-1273 must be physically incorporated (not referenced) in all contracts, subcontracts and lower-tier subcontracts (excluding purchase orders, rental agreements and other agreements for supplies or services related to a construction contract).
2. Subject to the applicability criteria noted in the following sections, these contract provisions shall apply to all work performed on the contract by the contractor's own organization and with the assistance of workers under the contractor's immediate superintendence and to all work performed on the contract by piecework, station work, or by subcontract.
3. A breach of any of the stipulations contained in these Required Contract Provisions may be sufficient grounds for withholding of progress payments, withholding of final payment, termination of the contract, suspension / debarment or any other action determined to be appropriate by the contracting agency and FHWA.
4. Selection of Labor: During the performance of this contract, the contractor shall not use convict labor for any purpose within the limits of a construction project on a Federal-aid highway unless it is labor performed by convicts who are on parole, supervised release, or probation. The term Federal-aid highway does not include roadways functionally classified as local roads or rural minor collectors.

II. NONDISCRIMINATION

The provisions of this section related to 23 CFR Part 230 are applicable to all Federal-aid construction contracts and to all related construction subcontracts of $10,000 or more. The provisions of 23 CFR Part 230 are not applicable to material supply, engineering, or architectural service contracts.

In addition, the contractor and all subcontractors must comply with the following policies: Executive Order 11246, 41 CFR 60, 29 CFR 1625-1627, Title 23 USC Section 140, the Rehabilitation Act of 1973, as amended (29 USC 794), Title VI of the Civil Rights Act of 1964, as amended, and related regulations including 49 CFR Parts 21, 26 and 27; and 23 CFR Parts 200, 230, and 633.

The contractor and all subcontractors must comply with: the requirements of the Equal Opportunity Clause in 41 CFR 60-1.4(b) and, for all construction contracts exceeding $10,000, the Standard Federal Equal Employment Opportunity Construction Contract Specifications in 41 CFR 60-4.3.

Note: The U.S. Department of Labor has exclusive authority to determine compliance with Executive Order 11246 and the policies of the Secretary of Labor including 41 CFR 60, and 29 CFR 1625-1627. The contracting agency and the FHWA have the authority and the responsibility to ensure compliance with Title 23 USC Section 140, the Rehabilitation Act of 1973, as amended (29 USC 794), and Title VI of the Civil Rights Act of 1964, as amended, and related regulations including 49 CFR Parts 21, 26 and 27; and 23 CFR Parts 200, 230, and 633.

The following provision is adopted from 23 CFR 230, Appendix A, with appropriate revisions to conform to the U.S. Department of Labor (US DOL) and FHWA requirements.

1. **Equal Employment Opportunity:** Equal employment opportunity (EEO) requirements not to discriminate and to take affirmative action to assure equal opportunity as set forth under laws, executive orders, rules, regulations (28 CFR 35, 29 CFR 1630, 29 CFR 1625-1627, 41 CFR 60 and 49 CFR 27) and orders of the Secretary of Labor as modified by the provisions prescribed herein, and imposed pursuant to 23 U.S.C. 140 shall constitute the EEO and specific affirmative action standards for the contractor's project activities under this contract. The provisions of the Americans with Disabilities Act of 1990 (42 U.S.C. 12101 et seq.) set forth under 28 CFR 35 and 29 CFR 1630 are incorporated by reference in this contract. In the execution of this contract, the contractor agrees to comply with the following minimum specific

requirement activities of EEO:

a. The contractor will work with the contracting agency and the Federal Government to ensure that it has made every good faith effort to provide equal opportunity with respect to all of its terms and conditions of employment and in their review of activities under the contract.
b. The contractor will accept as its operating policy the following statement:
"It is the policy of this Company to assure that applicants are employed, and that employees are treated during employment, without regard to their race, religion, sex, color, national origin, age or disability. Such action shall include: employment, upgrading, demotion, or transfer; recruitment or recruitment advertising; layoff or termination; rates of pay or other forms of compensation; and selection for training, including apprenticeship, pre-apprenticeship, and/or on-the-job training."

2. **EEO Officer:** The contractor will designate and make known to the contracting officers an EEO Officer who will have the responsibility for and must be capable of effectively administering and promoting an active EEO program and who must be assigned adequate authority and responsibility to do so.
3. **Dissemination of Policy:** All members of the contractor's staff who are authorized to hire, supervise, promote, and discharge employees, or who recommend such action, or who are substantially involved in such action, will be made fully cognizant of, and will implement, the contractor's EEO policy and contractual responsibilities to provide EEO in each grade and classification of employment. To ensure that the above agreement will be met, the following actions will be taken as a minimum:
   a. Periodic meetings of supervisory and personnel office employees will be conducted before the start of work and then not less often than once every six months, at which time the contractor's EEO policy and its implementation will be reviewed and explained. The meetings will be conducted by the EEO Officer.
   b. All new supervisory or personnel office employees will be given a thorough indoctrination by the EEO Officer, covering all major aspects of the contractor's EEO obligations within thirty days following their reporting for duty with the contractor.
   c. All personnel who are engaged in direct recruitment for the project will be instructed by the EEO Officer in the contractor's procedures for locating and hiring minorities and women.
   d. Notices and posters setting forth the contractor's EEO policy will be placed in areas readily accessible to employees, applicants for employment and potential employees.
   e. The contractor's EEO policy and the procedures to implement such policy will be brought to the attention of employees by means of meetings, employee handbooks, or other appropriate means.
4. **Recruitment:** When advertising for employees, the contractor will include in all advertisements for employees the notation: "An Equal Opportunity Employer." All such advertisements will be placed in publications having a large circulation among minorities and women in the area from which the project work force would normally be derived.
   a. The contractor will, unless precluded by a valid bargaining agreement, conduct systematic and direct recruitment through public and private employee referral sources likely to yield qualified minorities and women. To meet this requirement, the contractor will identify sources of potential minority group employees, and establish with such identified sources procedures whereby minority and women applicants may be referred to the contractor for employment consideration.
   b. In the event the contractor has a valid bargaining agreement providing for exclusive hiring hall referrals, the contractor is expected to observe the provisions of that agreement to the extent that the system meets the contractor's compliance with EEO contract provisions. Where implementation of such an agreement has the effect of discriminating against minorities or women, or obligates the contractor to do the same, such implementation violates Federal nondiscrimination provisions.
   c. The contractor will encourage its present employees to refer minorities and women as applicants for employment. Information and procedures with regard to referring such applicants will be discussed with employees.
5. **Personnel Actions:** Wages, working conditions, and employee benefits shall be established and administered, and personnel actions of every type, including hiring, upgrading, promotion, transfer, demotion, layoff, and termination, shall be taken without regard to race, color, religion, sex, national origin, age or disability. The following procedures shall be followed:
   a. The contractor will conduct periodic inspections of project sites to insure that working conditions and employee facilities do not indicate discriminatory treatment of project site personnel.
   b. The contractor will periodically evaluate the spread of wages paid within each classification to determine any evidence of discriminatory wage practices.
   c. The contractor will periodically review selected personnel actions in depth to determine whether there is evidence of discrimination. Where evidence is found, the contractor will promptly take corrective action. If the review indicates that the discrimination may extend beyond the actions reviewed, such corrective action shall include all affected persons.
   d. The contractor will promptly investigate all complaints of alleged discrimination made to the contractor in connection with its obligations under this contract, will attempt to resolve such complaints, and will take appropriate corrective action within a reasonable time. If the investigation indicates that the discrimination may affect persons other than the complainant, such corrective action shall include such other persons. Upon completion of each investigation, the contractor will inform every complainant of all of their avenues of appeal.
6. **Training and Promotion:**
   a. The contractor will assist in locating, qualifying, and increasing the skills of minorities and women who are applicants for employment or current employees. Such efforts should be aimed at developing full journey level status employees in the type of trade or job classification involved.
   b. Consistent with the contractor's work force requirements and as permissible under Federal and State regulations, the contractor shall make full use of training programs, i.e., apprenticeship, and on-the-job training programs for the geographical area of contract performance. In the event a special provision for training is provided under this contract, this subparagraph will be superseded as indicated in the special provision. The contracting agency may reserve training positions for persons who receive welfare assistance in accordance with 23 U.S.C. 140(a).
   c The contractor will advise employees and applicants for employment of available training programs and entrance requirements for each.
   d. The contractor will periodically review the training and promotion potential of employees who are minorities and women and will encourage eligible employees to apply for such training and promotion.

7. **Unions:** If the contractor relies in whole or in part upon unions as a source of employees, the contractor will use good faith efforts to obtain the cooperation of such unions to increase opportunities for minorities and women. Actions by the contractor, either directly or through a contractor's association acting as agent, will include the procedures set forth below:
   a. The contractor will use good faith efforts to develop, in cooperation with the unions, joint training programs aimed toward qualifying more minorities and women for membership in the unions and increasing the skills of minorities and women so that they may qualify for higher paying employment.
   b. The contractor will use good faith efforts to incorporate an EEO clause into each union agreement to the end that such union will be contractually bound to refer applicants without regard to their race, color, religion, sex, national origin, age or disability.
   c. The contractor is to obtain information as to the referral practices and policies of the labor union except that to the extent such information is within the exclusive possession of the labor union and such labor union refuses to furnish such information to the contractor, the contractor shall so certify to the contracting agency and shall set forth what efforts have been made to obtain such information.
   d. In the event the union is unable to provide the contractor with a reasonable flow of referrals within the time limit set forth in the collective bargaining agreement, the contractor will, through independent recruitment efforts, fill the employment vacancies without regard to race, color, religion, sex, national origin, age or disability; making full efforts to obtain qualified and/or qualifiable minorities and women. The failure of a union to provide sufficient referrals (even though it is obligated to provide exclusive referrals under the terms of a collective bargaining agreement) does not relieve the contractor from the requirements of this paragraph. In the event the union referral practice prevents the contractor from meeting the obligations pursuant to Executive Order 11246, as amended, and these special provisions, such contractor shall immediately notify the contracting agency.
8. **Reasonable Accommodation for Applicants / Employees with Disabilities:** The contractor must be familiar with the requirements for and comply with the Americans with Disabilities Act and all rules and regulations established there under. Employers must provide reasonable accommodation in all employment activities unless to do so would cause an undue hardship.
9. **Selection of Subcontractors, Procurement of Materials and Leasing of Equipment:** The contractor shall not discriminate on the grounds of race, color, religion, sex, national origin, age or disability in the selection and retention of subcontractors, including procurement of materials and leases of equipment. The contractor shall take all necessary and reasonable steps to ensure nondiscrimination in the administration of this contract.
   a. The contractor shall notify all potential subcontractors and suppliers and lessors of their EEO obligations under this contract.
   b. The contractor will use good faith efforts to ensure subcontractor compliance with their EEO obligations.
10. **Assurance Required by 49 CFR 26.13(b):**
   a. The requirements of 49 CFR Part 26 and the State DOT's U.S. DOT-approved DBE program are incorporated by reference.
   b. The contractor or subcontractor shall not discriminate on the basis of race, color, national origin, or sex in the performance of this contract. The contractor shall carry out applicable requirements of 49 CFR Part 26 in the award and administration of DOT-assisted contracts. Failure by the contractor to carry out these requirements is a material breach of this contract, which may result in the termination of this contract or such other remedy as the contracting agency deems appropriate.
11. **Records and Reports:** The contractor shall keep such records as necessary to document compliance with the EEO requirements. Such records shall be retained for a period of three years following the date of the final payment to the contractor for all contract work and shall be available at reasonable times and places for inspection by authorized representatives of the contracting agency and the FHWA.
   a. The records kept by the contractor shall document the following:
      (1) The number and work hours of minority and non-minority group members and women employed in each work classification on the project;
      (2) The progress and efforts being made in cooperation with unions, when applicable, to increase employment opportunities for minorities and women; and
      (3) The progress and efforts being made in locating, hiring, training, qualifying, and upgrading minorities and women;
   b. The contractors and subcontractors will submit an annual report to the contracting agency each July for the duration of the project, indicating the number of minority, women, and non-minority group employees currently engaged in each work classification required by the contract work. This information is to be reported on Form FHWA-1391. The staffing data should represent the project work force on board in all or any part of the last payroll period preceding the end of July. If on-the-job training is being required by special provision, the contractor will be required to collect and report training data. The employment data should reflect the work force on board during all or any part of the last payroll period preceding the end of July.

III. NONSEGREGATED FACILITIES

This provision is applicable to all Federal-aid construction contracts and to all related construction subcontracts of $10,000 or more.

The contractor must ensure that facilities provided for employees are provided in such a manner that segregation on the basis of race, color, religion, sex, or national origin cannot result. The contractor may neither require such segregated use by written or oral policies nor tolerate such use by employee custom. The contractor's obligation extends further to ensure that its employees are not assigned to perform their services at any location, under the contractor's control, where the facilities are segregated. The term "facilities" includes waiting rooms, work areas, restaurants and other eating areas, time clocks, restrooms, washrooms, locker rooms, and other storage or dressing areas, parking lots, drinking fountains, recreation or entertainment areas, transportation, and housing provided for employees. The contractor shall provide separate or single-user restrooms and necessary dressing or sleeping areas to assure privacy between sexes.

IV. DAVIS-BACON AND RELATED ACT PROVISIONS

This section is applicable to all Federal-aid construction projects exceeding $2,000 and to all related subcontracts and lower-tier subcontracts (regardless of subcontract size). The requirements apply to all projects located within the right-of-way of a roadway that is functionally classified as Federal-aid highway. This excludes roadways functionally classified as local roads or rural minor collectors, which are exempt. Contracting agencies may elect to apply these requirements to other projects.

The following provisions are from the U.S. Department of Labor regulations in 29 CFR 5.5 "Contract provisions and related matters" with minor revisions to conform to the FHWA-1273 format and FHWA program requirements.

1. **Minimum wages**
   a. All laborers and mechanics employed or working upon the site of the work, will be paid unconditionally and not less often than once a week, and without subsequent deduction or rebate on any account (except such payroll deductions as are permitted by regulations issued by the

Secretary of Labor under the Copeland Act (29 CFR part 3)), the full amount of wages and bona fide fringe benefits (or cash equivalents thereof) due at time of payment computed at rates not less than those contained in the wage determination of the Secretary of Labor which is attached hereto and made a part hereof, regardless of any contractual relationship which may be alleged to exist between the contractor and such laborers and mechanics.

Contributions made or costs reasonably anticipated for bona fide fringe benefits under section 1(b)(2) of the Davis-Bacon Act on behalf of laborers or mechanics are considered wages paid to such laborers or mechanics, subject to the provisions of paragraph 1.d. of this section; also, regular contributions made or costs incurred for more than a weekly period (but not less often than quarterly) under plans, funds, or programs which cover the particular weekly period, are deemed to be constructively made or incurred during such weekly period. Such laborers and mechanics shall be paid the appropriate wage rate and fringe benefits on the wage determination for the classification of work actually performed, without regard to skill, except as provided in 29 CFR 5.5(a)(4). Laborers or mechanics performing work in more than one classification may be compensated at the rate specified for each classification for the time actually worked therein: Provided, That the employer's payroll records accurately set forth the time spent in each classification in which work is performed. The wage determination (including any additional classification and wage rates conformed under paragraph 1.b. of this section) and the Davis-Bacon poster (WH–1321) shall be posted at all times by the contractor and its subcontractors at the site of the work in a prominent and accessible place where it can be easily seen by the workers.

b. (1) The contracting officer shall require that any class of laborers or mechanics, including helpers, which is not listed in the wage determination and which is to be employed under the contract shall be classified in conformance with the wage determination. The contracting officer shall approve an additional classification and wage rate and fringe benefits therefore only when the following criteria have been met:

(i) The work to be performed by the classification requested is not performed by a classification in the wage determination; and

(ii) The classification is utilized in the area by the construction industry; and

(iii) The proposed wage rate, including any bona fide fringe benefits, bears a reasonable relationship to the wage rates contained in the wage determination.

(2) If the contractor and the laborers and mechanics to be employed in the classification (if known), or their representatives, and the contracting officer agree on the classification and wage rate (including the amount designated for fringe benefits where appropriate), a report of the action taken shall be sent by the contracting officer to the Administrator of the Wage and Hour Division, Employment Standards Administration, U.S. Department of Labor, Washington, DC 20210. The Administrator, or an authorized representative, will approve, modify, or disapprove every additional classification action within 30 days of receipt and so advise the contracting officer or will notify the contracting officer within the 30-day period that additional time is necessary.

(3) In the event the contractor, the laborers or mechanics to be employed in the classification or their representatives, and the contracting officer do not agree on the proposed classification and wage rate (including the amount designated for fringe benefits, where appropriate), the contracting officer shall refer the questions, including the views of all interested parties and the recommendation of the contracting officer, to the Wage and Hour Administrator for determination. The Wage and Hour Administrator, or an authorized representative, will issue a determination within 30 days of receipt and so advise the contracting officer or will notify the contracting officer within the 30-day period that additional time is necessary.

(4) The wage rate (including fringe benefits where appropriate) determined pursuant to paragraphs 1.b.(2) or 1.b.(3) of this section, shall be paid to all workers performing work in the classification under this contract from the first day on which work is performed in the classification.

c. Whenever the minimum wage rate prescribed in the contract for a class of laborers or mechanics includes a fringe benefit which is not expressed as an hourly rate, the contractor shall either pay the benefit as stated in the wage determination or shall pay another bona fide fringe benefit or an hourly cash equivalent thereof.

d. If the contractor does not make payments to a trustee or other third person, the contractor may consider as part of the wages of any laborer or mechanic the amount of any costs reasonably anticipated in providing bona fide fringe benefits under a plan or program, Provided, That the Secretary of Labor has found, upon the written request of the contractor, that the applicable standards of the Davis-Bacon Act have been met. The Secretary of Labor may require the contractor to set aside in a separate account assets for the meeting of obligations under the plan or program.

2. **Withholding.** The contracting agency shall upon its own action or upon written request of an authorized representative of the Department of Labor, withhold or cause to be withheld from the contractor under this contract, or any other Federal contract with the same prime contractor, or any other federally-assisted contract subject to Davis-Bacon prevailing wage requirements, which is held by the same prime contractor, so much of the accrued payments or advances as may be considered necessary to pay laborers and mechanics, including apprentices, trainees, and helpers, employed by the contractor or any subcontractor the full amount of wages required by the contract. In the event of failure to pay any laborer or mechanic, including any apprentice, trainee, or helper, employed or working on the site of the work, all or part of the wages required by the contract, the contracting agency may, after written notice to the contractor, take such action as may be necessary to cause the suspension of any further payment, advance, or guarantee of funds until such violations have ceased.

3. **Payrolls and basic records**

a. Payrolls and basic records relating thereto shall be maintained by the contractor during the course of the work and preserved for a period of three years thereafter for all laborers and mechanics working at the site of the work. Such records shall contain the name, address, and social security number of each such worker, his or her correct classification, hourly rates of wages paid (including rates of contributions or costs anticipated for bona fide fringe benefits or cash equivalents thereof of the types described in section 1(b)(2)(B) of the Davis-Bacon Act), daily and weekly number of hours worked, deductions made and actual wages paid. Whenever the Secretary of Labor has found under 29 CFR 5.5(a)(1)(iv) that the wages of any laborer or mechanic include the amount of any costs reasonably anticipated in providing benefits under a plan or program described in section 1(b)(2)(B) of the Davis-Bacon Act, the contractor shall maintain records which show that the commitment to provide such benefits is enforceable, that the plan or program is financially responsible, and that the plan or program has been communicated in writing to the laborers or mechanics affected, and records which show the costs anticipated or the actual cost incurred in providing such benefits. Contractors employing apprentices or trainees under approved programs shall maintain written evidence of the registration of apprenticeship programs and certification of trainee programs, the registration of the apprentices and trainees, and the ratios and wage rates prescribed in the applicable programs.

b. (1) The contractor shall submit weekly for each week in which any contract work is performed a copy of all payrolls to the contracting agency. The payrolls submitted shall set out accurately and completely all of the information required to be maintained under 29 CFR 5.5(a)(3)(i), except that full social security numbers and home addresses shall not be included on weekly transmittals. Instead the

payrolls shall only need to include an individually identifying number for each employee (e.g. , the last four digits of the employee's social security number). The required weekly payroll information may be submitted in any form desired. Optional Form WH–347 is available for this purpose from the Wage and Hour Division Web site at http://www.dol.gov/esa/whd/forms/ wh347instr.htm or its successor site. The prime contractor is responsible for the submission of copies of payrolls by all subcontractors. Contractors and subcontractors shall maintain the full social security number and current address of each covered worker, and shall provide them upon request to the contracting agency for transmission to the State DOT, the FHWA or the Wage and Hour Division of the Department of Labor for purposes of an investigation or audit of compliance with prevailing wage requirements. It is not a violation of this section for a prime contractor to require a subcontractor to provide addresses and social security numbers to the prime contractor for its own records, without weekly submission to the contracting agency.

(2) Each payroll submitted shall be accompanied by a "Statement of Compliance," signed by the contractor or subcontractor or his or her agent who pays or supervises the payment of the persons employed under the contract and shall certify the following:

(i) That the payroll for the payroll period contains the information required to be provided under §5.5 (a)(3)(ii) of Regulations, 29 CFR part 5, the appropriate information is being maintained under §5.5 (a)(3)(i) of Regulations, 29 CFR part 5, and that such information is correct and complete;

(ii) That each laborer or mechanic (including each helper, apprentice, and trainee) employed on the contract during the payroll period has been paid the full weekly wages earned, without rebate, either directly or indirectly, and that no deductions have been made either directly or indirectly from the full wages earned, other than permissible deductions as set forth in Regulations, 29 CFR part 3;

(iii) That each laborer or mechanic has been paid not less than the applicable wage rates and fringe benefits or cash equivalents for the classification of work performed, as specified in the applicable wage determination incorporated into the contract.

(3) The weekly submission of a properly executed certification set forth on the reverse side of Optional Form WH–347 shall satisfy the requirement for submission of the "Statement of Compliance" required by paragraph 3.b.(2) of this section.

(4) The falsification of any of the above certifications may subject the contractor or subcontractor to civil or criminal prosecution under section 1001 of title 18 and section 231 of title 31 of the United States Code.

c. The contractor or subcontractor shall make the records required under paragraph 3.a. of this section available for inspection, copying, or transcription by authorized representatives of the contracting agency, the State DOT, the FHWA, or the Department of Labor, and shall permit such representatives to interview employees during working hours on the job. If the contractor or subcontractor fails to submit the required records or to make them available, the FHWA may, after written notice to the contractor, the contracting agency or the State DOT, take such action as may be necessary to cause the suspension of any further payment, advance, or guarantee of funds. Furthermore, failure to submit the required records upon request or to make such records available may be grounds for debarment action pursuant to 29 CFR 5.12.

4. **Apprentices and trainees**

a. Apprentices (programs of the USDOL). Apprentices will be permitted to work at less than the predetermined rate for the work they performed when they are employed pursuant to and individually registered in a bona fide apprenticeship program registered with the U.S. Department of Labor, Employment and Training Administration, Office of Apprenticeship Training, Employer and Labor Services, or with a State Apprenticeship Agency recognized by the Office, or if a person is employed in his or her first 90 days of probationary employment as an apprentice in such an apprenticeship program, who is not individually registered in the program, but who has been certified by the Office of Apprenticeship Training, Employer and Labor Services or a State Apprenticeship Agency (where appropriate) to be eligible for probationary employment as an apprentice.

The allowable ratio of apprentices to journeymen on the job site in any craft classification shall not be greater than the ratio permitted to the contractor as to the entire work force under the registered program. Any worker listed on a payroll at an apprentice wage rate, who is not registered or otherwise employed as stated above, shall be paid not less than the applicable wage rate on the wage determination for the classification of work actually performed. In addition, any apprentice performing work on the job site in excess of the ratio permitted under the registered program shall be paid not less than the applicable wage rate on the wage determination for the work actually performed. Where a contractor is performing construction on a project in a locality other than that in which its program is registered, the ratios and wage rates (expressed in percentages of the journeyman's hourly rate) specified in the contractor's or subcontractor's registered program shall be observed.

Every apprentice must be paid at not less than the rate specified in the registered program for the apprentice's level of progress, expressed as a percentage of the journeymen hourly rate specified in the applicable wage determination. Apprentices shall be paid fringe benefits in accordance with the provisions of the apprenticeship program. If the apprenticeship program does not specify fringe benefits, apprentices must be paid the full amount of fringe benefits listed on the wage determination for the applicable classification. If the Administrator determines that a different practice prevails for the applicable apprentice classification, fringes shall be paid in accordance with that determination.

In the event the Office of Apprenticeship Training, Employer and Labor Services, or a State Apprenticeship Agency recognized by the Office, withdraws approval of an apprenticeship program, the contractor will no longer be permitted to utilize apprentices at less than the applicable predetermined rate for the work performed until an acceptable program is approved.

b. Trainees (programs of the USDOL). Except as provided in 29 CFR 5.16, trainees will not be permitted to work at less than the predetermined rate for the work performed unless they are employed pursuant to and individually registered in a program which has received prior approval, evidenced by formal certification by the U.S. Department of Labor, Employment and Training Administration.

The ratio of trainees to journeymen on the job site shall not be greater than permitted under the plan approved by the Employment and Training Administration.

Every trainee must be paid at not less than the rate specified in the approved program for the trainee's level of progress, expressed as a percentage of the journeyman hourly rate specified in the applicable wage determination. Trainees shall be paid fringe benefits in accordance with the provisions of the trainee program. If the trainee program does not mention fringe benefits, trainees shall be paid the full amount of fringe benefits listed on the wage determination unless the Administrator of the Wage and Hour Division determines that there is an apprenticeship program associated with the corresponding journeyman wage rate on the wage determination which provides for less than full fringe benefits for apprentices. Any employee listed on the payroll at a trainee rate who is not registered and participating in a training plan approved by the Employment and Training Administration shall be paid not less than the applicable wage rate on the wage determination for the classification of work actually performed. In addition, any trainee performing work on the job site in excess of the ratio permitted under the registered program shall be paid not less than the applicable wage rate on the wage determination for the work actually performed.

In the event the Employment and Training Administration withdraws approval of a training program, the contractor will no longer be

permitted to utilize trainees at less than the applicable predetermined rate for the work performed until an acceptable program is approved.

c. Equal employment opportunity. The utilization of apprentices, trainees and journeymen under this part shall be in conformity with the equal employment opportunity requirements of Executive Order 11246, as amended, and 29 CFR part 30.

d. Apprentices and Trainees (programs of the U.S. DOT). Apprentices and trainees working under apprenticeship and skill training programs which have been certified by the Secretary of Transportation as promoting EEO in connection with Federal-aid highway construction programs are not subject to the requirements of paragraph 4 of this Section IV. The straight time hourly wage rates for apprentices and trainees under such programs will be established by the particular programs. The ratio of apprentices and trainees to journeymen shall not be greater than permitted by the terms of the particular program.

5. **Compliance with Copeland Act requirements.** The contractor shall comply with the requirements of 29 CFR part 3, which are incorporated by reference in this contract.
6. **Subcontracts.** The contractor or subcontractor shall insert Form FHWA-1273 in any subcontracts and also require the subcontractors to include Form FHWA-1273 in any lower tier subcontracts. The prime contractor shall be responsible for the compliance by any subcontractor or lower tier subcontractor with all the contract clauses in 29 CFR 5.5.
7. **Contract termination:** debarment. A breach of the contract clauses in 29 CFR 5.5 may be grounds for termination of the contract, and for debarment as a contractor and a subcontractor as provided in 29 CFR 5.12.
8. **Compliance with Davis-Bacon and Related Act requirements.** All rulings and interpretations of the Davis-Bacon and Related Acts contained in 29 CFR parts 1, 3, and 5 are herein incorporated by reference in this contract.
9. **Disputes concerning labor standards.** Disputes arising out of the labor standards provisions of this contract shall not be subject to the general disputes clause of this contract. Such disputes shall be resolved in accordance with the procedures of the Department of Labor set forth in 29 CFR parts 5, 6, and 7. Disputes within the meaning of this clause include disputes between the contractor (or any of its subcontractors) and the contracting agency, the U.S. Department of Labor, or the employees or their representatives.
10. **Certification of eligibility.**
    a. By entering into this contract, the contractor certifies that neither it (nor he or she) nor any person or firm who has an interest in the contractor's firm is a person or firm ineligible to be awarded Government contracts by virtue of section 3(a) of the Davis-Bacon Act or 29 CFR 5.12(a)(1).
    b. No part of this contract shall be subcontracted to any person or firm ineligible for award of a Government contract by virtue of section 3(a) of the Davis-Bacon Act or 29 CFR 5.12(a)(1).
    c. The penalty for making false statements is prescribed in the U.S. Criminal Code, 18 U.S.C. 1001.

V. CONTRACT WORK HOURS AND SAFETY STANDARDS ACT

The following clauses apply to any Federal-aid construction contract in an amount in excess of $100,000 and subject to the overtime provisions of the Contract Work Hours and Safety Standards Act. These clauses shall be inserted in addition to the clauses required by 29 CFR 5.5(a) or 29 CFR 4.6. As used in this paragraph, the terms laborers and mechanics include watchmen and guards.

1. **Overtime requirements.** No contractor or subcontractor contracting for any part of the contract work which may require or involve the employment of laborers or mechanics shall require or permit any such laborer or mechanic in any workweek in which he or she is employed on such work to work in excess of forty hours in such workweek unless such laborer or mechanic receives compensation at a rate not less than one and one-half times the basic rate of pay for all hours worked in excess of forty hours in such workweek.
2. **Violation; liability for unpaid wages; liquidated damages.** In the event of any violation of the clause set forth in paragraph (1.) of this section, the contractor and any subcontractor responsible therefor shall be liable for the unpaid wages. In addition, such contractor and subcontractor shall be liable to the United States (in the case of work done under contract for the District of Columbia or a territory, to such District or to such territory), for liquidated damages. Such liquidated damages shall be computed with respect to each individual laborer or mechanic, including watchmen and guards, employed in violation of the clause set forth in paragraph (1.) of this section, in the sum of $10 for each calendar day on which such individual was required or permitted to work in excess of the standard workweek of forty hours without payment of the overtime wages required by the clause set forth in paragraph (1.) of this section.
3. **Withholding for unpaid wages and liquidated damages.** The FHWA or the contacting agency shall upon its own action or upon written request of an authorized representative of the Department of Labor withhold or cause to be withheld, from any moneys payable on account of work performed by the contractor or subcontractor under any such contract or any other Federal contract with the same prime contractor, or any other federally-assisted contract subject to the Contract Work Hours and Safety Standards Act, which is held by the same prime contractor, such sums as may be determined to be necessary to satisfy any liabilities of such contractor or subcontractor for unpaid wages and liquidated damages as provided in the clause set forth in paragraph (2.) of this section.
4. **Subcontracts.** The contractor or subcontractor shall insert in any subcontracts the clauses set forth in paragraph (1.) through (4.) of this section and also a clause requiring the subcontractors to include these clauses in any lower tier subcontracts. The prime contractor shall be responsible for compliance by any subcontractor or lower tier subcontractor with the clauses set forth in paragraphs (1.) through (4.) of this section.

VI. SUBLETTING OR ASSIGNING THE CONTRACT

This provision is applicable to all Federal-aid construction contracts on the National Highway System.

1. The contractor shall perform with its own organization contract work amounting to not less than 30 percent (or a greater percentage if specified elsewhere in the contract) of the total original contract price, excluding any specialty items designated by the contracting agency. Specialty items may be performed by subcontract and the amount of any such specialty items performed may be deducted from the total original contract price before computing the amount of work required to be performed by the contractor's own organization (23 CFR 635.116).
    a. The term “perform work with its own organization” refers to workers employed or leased by the prime contractor, and equipment owned or rented by the prime contractor, with or without operators. Such term does not include employees or equipment of a subcontractor or lower tier subcontractor, agents of the prime contractor, or any other assignees. The term may include payments for the costs of hiring leased employees

from an employee leasing firm meeting all relevant Federal and State regulatory requirements. Leased employees may only be included in this term if the prime contractor meets all of the following conditions:
(1) the prime contractor maintains control over the supervision of the day-to-day activities of the leased employees;
(2) the prime contractor remains responsible for the quality of the work of the leased employees;
(3) the prime contractor retains all power to accept or exclude individual employees from work on the project; and
(4) the prime contractor remains ultimately responsible for the payment of predetermined minimum wages, the submission of payrolls, statements of compliance and all other Federal regulatory requirements.

b. "Specialty Items" shall be construed to be limited to work that requires highly specialized knowledge, abilities, or equipment not ordinarily available in the type of contracting organizations qualified and expected to bid or propose on the contract as a whole and in general are to be limited to minor components of the overall contract.

2. The contract amount upon which the requirements set forth in paragraph (1) of Section VI is computed includes the cost of material and manufactured products which are to be purchased or produced by the contractor under the contract provisions.
3. The contractor shall furnish (a) a competent superintendent or supervisor who is employed by the firm, has full authority to direct performance of the work in accordance with the contract requirements, and is in charge of all construction operations (regardless of who performs the work) and (b) such other of its own organizational resources (supervision, management, and engineering services) as the contracting officer determines is necessary to assure the performance of the contract.
4. No portion of the contract shall be sublet, assigned or otherwise disposed of except with the written consent of the contracting officer, or authorized representative, and such consent when given shall not be construed to relieve the contractor of any responsibility for the fulfillment of the contract. Written consent will be given only after the contracting agency has assured that each subcontract is evidenced in writing and that it contains all pertinent provisions and requirements of the prime contract.
5. The 30% self-performance requirement of paragraph (1) is not applicable to design-build contracts; however, contracting agencies may establish their own self-performance requirements.

VII. SAFETY: ACCIDENT PREVENTION

This provision is applicable to all Federal-aid construction contracts and to all related subcontracts.

1. In the performance of this contract the contractor shall comply with all applicable Federal, State, and local laws governing safety, health, and sanitation (23 CFR 635). The contractor shall provide all safeguards, safety devices and protective equipment and take any other needed actions as it determines, or as the contracting officer may determine, to be reasonably necessary to protect the life and health of employees on the job and the safety of the public and to protect property in connection with the performance of the work covered by the contract.
2. It is a condition of this contract, and shall be made a condition of each subcontract, which the contractor enters into pursuant to this contract, that the contractor and any subcontractor shall not permit any employee, in performance of the contract, to work in surroundings or under conditions which are unsanitary, hazardous or dangerous to his/her health or safety, as determined under construction safety and health standards (29 CFR 1926) promulgated by the Secretary of Labor, in accordance with Section 107 of the Contract Work Hours and Safety Standards Act (40 U.S.C. 3704).
3. Pursuant to 29 CFR 1926.3, it is a condition of this contract that the Secretary of Labor or authorized representative thereof, shall have right of entry to any site of contract performance to inspect or investigate the matter of compliance with the construction safety and health standards and to carry out the duties of the Secretary under Section 107 of the Contract Work Hours and Safety Standards Act (40 U.S.C.3704).

VIII. FALSE STATEMENTS CONCERNING HIGHWAY PROJECTS

This provision is applicable to all Federal-aid construction contracts and to all related subcontracts.

In order to assure high quality and durable construction in conformity with approved plans and specifications and a high degree of reliability on statements and representations made by engineers, contractors, suppliers, and workers on Federal-aid highway projects, it is essential that all persons concerned with the project perform their functions as carefully, thoroughly, and honestly as possible. Willful falsification, distortion, or misrepresentation with respect to any facts related to the project is a violation of Federal law. To prevent any misunderstanding regarding the seriousness of these and similar acts, Form FHWA-1022 shall be posted on each Federal-aid highway project (23 CFR 635) in one or more places where it is readily available to all persons concerned with the project:

18 U.S.C. 1020 reads as follows:

"Whoever, being an officer, agent, or employee of the United States, or of any State or Territory, or whoever, whether a person, association, firm, or corporation, knowingly makes any false statement, false representation, or false report as to the character, quality, quantity, or cost of the material used or to be used, or the quantity or quality of the work performed or to be performed, or the cost thereof in connection with the submission of plans, maps, specifications, contracts, or costs of construction on any highway or related project submitted for approval to the Secretary of Transportation; or

Whoever knowingly makes any false statement, false representation, false report or false claim with respect to the character, quality, quantity, or cost of any work performed or to be performed, or materials furnished or to be furnished, in connection with the construction of any highway or related project approved by the Secretary of Transportation; or

Whoever knowingly makes any false statement or false representation as to material fact in any statement, certificate, or report submitted pursuant to provisions of the Federal-aid Roads Act approved July 1, 1916, (39 Stat. 355), as amended and supplemented;

Shall be fined under this title or imprisoned not more than 5 years or both."

IX. IMPLEMENTATION OF CLEAN AIR ACT AND FEDERAL WATER POLLUTION CONTROL ACT

This provision is applicable to all Federal-aid construction contracts and to all related subcontracts.

By submission of this bid/proposal or the execution of this contract, or subcontract, as appropriate, the bidder, proposer, Federal-aid construction contractor, or subcontractor, as appropriate, will be deemed to have stipulated as follows:

1. That any person who is or will be utilized in the performance of this contract is not prohibited from receiving an award due to a violation of Section 508 of the Clean Water Act or Section 306 of the Clean Air Act.
2. That the contractor agrees to include or cause to be included the requirements of paragraph (1) of this Section X in every subcontract, and further agrees to take such action as the contracting agency may direct as a means of enforcing such requirements.

X. CERTIFICATION REGARDING DEBARMENT, SUSPENSION, INELIGIBILITY AND VOLUNTARY EXCLUSION

This provision is applicable to all Federal-aid construction contracts, design-build contracts, subcontracts, lower-tier subcontracts, purchase orders, lease agreements, consultant contracts or any other covered transaction requiring FHWA approval or that is estimated to cost $25,000 or more – as defined in 2 CFR Parts 180 and 1200.

1. **Instructions for Certification – First Tier Participants:**
   a. By signing and submitting this proposal, the prospective first tier participant is providing the certification set out below.
   b. The inability of a person to provide the certification set out below will not necessarily result in denial of participation in this covered transaction. The prospective first tier participant shall submit an explanation of why it cannot provide the certification set out below. The certification or explanation will be considered in connection with the department or agency's determination whether to enter into this transaction. However, failure of the prospective first tier participant to furnish a certification or an explanation shall disqualify such a person from participation in this transaction.
   c. The certification in this clause is a material representation of fact upon which reliance was placed when the contracting agency determined to enter into this transaction. If it is later determined that the prospective participant knowingly rendered an erroneous certification, in addition to other remedies available to the Federal Government, the contracting agency may terminate this transaction for cause of default.
   d. The prospective first tier participant shall provide immediate written notice to the contracting agency to whom this proposal is submitted if any time the prospective first tier participant learns that its certification was erroneous when submitted or has become erroneous by reason of changed circumstances.
   e. The terms "covered transaction," "debarred," "suspended," "ineligible," "participant," "person," "principal," and "voluntarily excluded," as used in this clause, are defined in 2 CFR Parts 180 and 1200. “First Tier Covered Transactions” refers to any covered transaction between a grantee or subgrantee of Federal funds and a participant (such as the prime or general contract). “Lower Tier Covered Transactions” refers to any covered transaction under a First Tier Covered Transaction (such as subcontracts). “First Tier Participant” refers to the participant who has entered into a covered transaction with a grantee or subgrantee of Federal funds (such as the prime or general contractor). “Lower Tier Participant” refers any participant who has entered into a covered transaction with a First Tier Participant or other Lower Tier Participants (such as subcontractors and suppliers).
   f. The prospective first tier participant agrees by submitting this proposal that, should the proposed covered transaction be entered into, it shall not knowingly enter into any lower tier covered transaction with a person who is debarred, suspended, declared ineligible, or voluntarily excluded from participation in this covered transaction, unless authorized by the department or agency entering into this transaction.
   g. The prospective first tier participant further agrees by submitting this proposal that it will include the clause titled "Certification Regarding Debarment, Suspension, Ineligibility and Voluntary Exclusion-Lower Tier Covered Transactions," provided by the department or contracting agency, entering into this covered transaction, without modification, in all lower tier covered transactions and in all solicitations for lower tier covered transactions exceeding the $25,000 threshold.
   h. A participant in a covered transaction may rely upon a certification of a prospective participant in a lower tier covered transaction that is not debarred, suspended, ineligible, or voluntarily excluded from the covered transaction, unless it knows that the certification is erroneous. A participant is responsible for ensuring that its principals are not suspended, debarred, or otherwise ineligible to participate in covered transactions. To verify the eligibility of its principals, as well as the eligibility of any lower tier prospective participants, each participant may, but is not required to, check the Excluded Parties List System website (https://www.epls.gov/), which is compiled by the General Services Administration.
   i. Nothing contained in the foregoing shall be construed to require the establishment of a system of records in order to render in good faith the certification required by this clause. The knowledge and information of the prospective participant is not required to exceed that which is normally possessed by a prudent person in the ordinary course of business dealings.
   j. Except for transactions authorized under paragraph (f) of these instructions, if a participant in a covered transaction knowingly enters into a lower tier covered transaction with a person who is suspended, debarred, ineligible, or voluntarily excluded from participation in this transaction, in addition to other remedies available to the Federal Government, the department or agency may terminate this transaction for cause or default.

* * * * *

2. **Certification Regarding Debarment, Suspension, Ineligibility and Voluntary Exclusion – First Tier Participants:**
   a. The prospective first tier participant certifies to the best of its knowledge and belief, that it and its principals:
      (1) Are not presently debarred, suspended, proposed for debarment, declared ineligible, or voluntarily excluded from participating in covered transactions by any Federal department or agency;
      (2) Have not within a three-year period preceding this proposal been convicted of or had a civil judgment rendered against them for commission of fraud or a criminal offense in connection with obtaining, attempting to obtain, or performing a public (Federal, State or local) transaction or contract under a public transaction; violation of Federal or State antitrust statutes or commission of embezzlement, theft, forgery, bribery, falsification or destruction of records, making false statements, or receiving stolen property;
      (3) Are not presently indicted for or otherwise criminally or civilly charged by a governmental entity (Federal, State or local) with commission of any of the offenses enumerated in paragraph (a)(2) of this certification; and
      (4) Have not within a three-year period preceding this application/proposal had one or more public transactions (Federal, State or local) terminated for cause or default.
   b. Where the prospective participant is unable to certify to any of the statements in this certification, such prospective participant shall attach an explanation to this proposal.
2. **Instructions for Certification - Lower Tier Participants:**
   (Applicable to all subcontracts, purchase orders and other lower tier transactions requiring prior FHWA approval or estimated to cost $25,000 or more - 2 CFR Parts 180 and 1200)
   a. By signing and submitting this proposal, the prospective lower tier is providing the certification set out below.
   b. The certification in this clause is a material representation of fact upon which reliance was placed when this transaction was entered into. If it is later determined that the prospective lower tier participant knowingly rendered an erroneous certification, in addition to other remedies available to the Federal Government, the department, or agency with which this transaction originated may pursue available remedies, including suspension and/or debarment.

c. The prospective lower tier participant shall provide immediate written notice to the person to which this proposal is submitted if at any time the prospective lower tier participant learns that its certification was erroneous by reason of changed circumstances.
d. The terms "covered transaction," "debarred," "suspended," "ineligible," "participant," "person," "principal," and "voluntarily excluded," as used in this clause, are defined in 2 CFR Parts 180 and 1200. You may contact the person to which this proposal is submitted for assistance in obtaining a copy of those regulations. “First Tier Covered Transactions” refers to any covered transaction between a grantee or subgrantee of Federal funds and a participant (such as the prime or general contract). “Lower Tier Covered Transactions” refers to any covered transaction under a First Tier Covered Transaction (such as subcontracts). “First Tier Participant” refers to the participant who has entered into a covered transaction with a grantee or subgrantee of Federal funds (such as the prime or general contractor). “Lower Tier Participant” refers any participant who has entered into a covered transaction with a First Tier Participant or other Lower Tier Participants (such as subcontractors and suppliers).
e. The prospective lower tier participant agrees by submitting this proposal that, should the proposed covered transaction be entered into, it shall not knowingly enter into any lower tier covered transaction with a person who is debarred, suspended, declared ineligible, or voluntarily excluded from participation in this covered transaction, unless authorized by the department or agency with which this transaction originated.
f. The prospective lower tier participant further agrees by submitting this proposal that it will include this clause titled "Certification Regarding Debarment, Suspension, Ineligibility and Voluntary Exclusion-Lower Tier Covered Transaction," without modification, in all lower tier covered transactions and in all solicitations for lower tier covered transactions exceeding the $25,000 threshold.
g. A participant in a covered transaction may rely upon a certification of a prospective participant in a lower tier covered transaction that is not debarred, suspended, ineligible, or voluntarily excluded from the covered transaction, unless it knows that the certification is erroneous. A participant is responsible for ensuring that its principals are not suspended, debarred, or otherwise ineligible to participate in covered transactions. To verify the eligibility of its principals, as well as the eligibility of any lower tier prospective participants, each participant may, but is not required to, check the Excluded Parties List System website (https://www.epls.gov/), which is compiled by the General Services Administration.
h. Nothing contained in the foregoing shall be construed to require establishment of a system of records in order to render in good faith the certification required by this clause. The knowledge and information of participant is not required to exceed that which is normally possessed by a prudent person in the ordinary course of business dealings.
i. Except for transactions authorized under paragraph e of these instructions, if a participant in a covered transaction knowingly enters into a lower tier covered transaction with a person who is suspended, debarred, ineligible, or voluntarily excluded from participation in this transaction, in addition to other remedies available to the Federal Government, the department or agency with which this transaction originated may pursue available remedies, including suspension and/or debarment.

* * * * *

Certification Regarding Debarment, Suspension, Ineligibility and Voluntary Exclusion--Lower Tier Participants:

1. The prospective lower tier participant certifies, by submission of this proposal, that neither it nor its principals is presently debarred, suspended, proposed for debarment, declared ineligible, or voluntarily excluded from participating in covered transactions by any Federal department or agency.
2. Where the prospective lower tier participant is unable to certify to any of the statements in this certification, such prospective participant shall attach an explanation to this proposal.

* * * * *

XI. CERTIFICATION REGARDING USE OF CONTRACT FUNDS FOR LOBBYING

This provision is applicable to all Federal-aid construction contracts and to all related subcontracts which exceed $100,000 (49 CFR 20).

1. The prospective participant certifies, by signing and submitting this bid or proposal, to the best of his or her knowledge and belief, that:
   a. No Federal appropriated funds have been paid or will be paid, by or on behalf of the undersigned, to any person for influencing or attempting to influence an officer or employee of any Federal agency, a Member of Congress, an officer or employee of Congress, or an employee of a Member of Congress in connection with the awarding of any Federal contract, the making of any Federal grant, the making of any Federal loan, the entering into of any cooperative agreement, and the extension, continuation, renewal, amendment, or modification of any Federal contract, grant, loan, or cooperative agreement.
   b. If any funds other than Federal appropriated funds have been paid or will be paid to any person for influencing or attempting to influence an officer or employee of any Federal agency, a Member of Congress, an officer or employee of Congress, or an employee of a Member of Congress in connection with this Federal contract, grant, loan, or cooperative agreement, the undersigned shall complete and submit Standard Form-LLL, "Disclosure Form to Report Lobbying," in accordance with its instructions.
2. This certification is a material representation of fact upon which reliance was placed when this transaction was made or entered into. Submission of this certification is a prerequisite for making or entering into this transaction imposed by 31 U.S.C. 1352. Any person who fails to file the required certification shall be subject to a civil penalty of not less than $10,000 and not more than $100,000 for each such failure.
3. The prospective participant also agrees by submitting its bid or proposal that the participant shall require that the language of this certification be included in all lower tier subcontracts, which exceed $100,000 and that all such recipients shall certify and disclose accordingly.

STANDARD SPECIAL PROVISION

ON-THE-JOB TRAINING

(10-16-07) (Rev. 4-21-15) Z-10

Description

The North Carolina Department of Transportation will administer a custom version of the Federal On-the-Job Training (OJT) Program, commonly referred to as the Alternate OJT Program. All contractors (existing and newcomers) will be automatically placed in the Alternate Program. Standard OJT requirements typically associated with individual projects will no longer be applied at the project level. Instead, these requirements will be applicable on an annual basis for each contractor administered by the OJT Program Manager.

On the Job Training shall meet the requirements of 23 CFR 230.107 (b), 23 USC – Section 140, this provision and the On-the-Job Training Program Manual.

The Alternate OJT Program will allow a contractor to train employees on Federal, State and privately funded projects located in North Carolina. However, priority shall be given to training employees on NCDOT Federal-Aid funded projects.

Minorities and Women

Developing, training and upgrading of minorities and women toward journeyman level status is a primary objective of this special training provision. Accordingly, the Contractor shall make every effort to enroll minority and women as trainees to the extent that such persons are available within a reasonable area of recruitment. This training commitment is not intended, and shall not be used, to discriminate against any applicant for training, whether a member of a minority group or not.

Assigning Training Goals

The Department, through the OJT Program Manager, will assign training goals for a calendar year based on the contractors' past three years' activity and the contractors' anticipated upcoming year's activity with the Department. At the beginning of each year, all contractors eligible will be contacted by the Department to determine the number of trainees that will be assigned for the upcoming calendar year. At that time the Contractor shall enter into an agreement with the Department to provide a self-imposed on-the-job training program for the calendar year. This agreement will include a specific number of annual training goals agreed to by both parties. The number of training assignments may range from 1 to 15 per contractor per calendar year. The Contractor shall sign an agreement to fulfill their annual goal for the year.\

Training Classifications

The Contractor shall provide on-the-job training aimed at developing full journeyman level workers in the construction craft/operator positions. Preference shall be given to providing training in the following skilled work classifications:

Equipment Operators	Office Engineers
Truck Drivers	Estimators
Carpenters	Iron / Reinforcing Steel Workers
Concrete Finishers	Mechanics
Pipe Layers	Welders

The Department has established common training classifications and their respective training requirements that may be used by the contractors. However, the classifications established are not all-inclusive. Where the training is oriented toward construction applications, training will be allowed in lower-level management positions such as office engineers and estimators. Contractors shall submit new classifications for specific job functions that their employees are performing. The Department will review and recommend for acceptance to FHWA the new classifications proposed by contractors, if applicable. New classifications shall meet the following requirements:

Proposed training classifications are reasonable and realistic based on the job skill classification needs, and

The number of training hours specified in the training classification is consistent with common practices and provides enough time for the trainee to obtain journeyman level status.

The Contractor may allow trainees to be trained by a subcontractor provided that the Contractor retains primary responsibility for meeting the training and this provision is made applicable to the subcontract. However, only the Contractor will receive credit towards the annual goal for the trainee.

Where feasible, 25 percent of apprentices or trainees in each occupation shall be in their first year of apprenticeship or training. The number of trainees shall be distributed among the work classifications on the basis of the contractor's needs and the availability of journeymen in the various classifications within a reasonable area of recruitment.

No employee shall be employed as a trainee in any classification in which they have successfully completed a training course leading to journeyman level status or in which they have been employed as a journeyman.

Records and Reports

The Contractor shall maintain enrollment, monthly and completion reports documenting company compliance under these contract documents. These documents and any other information as requested shall be submitted to the OJT Program Manager.

Upon completion and graduation of the program, the Contractor shall provide each trainee with a certification Certificate showing the type and length of training satisfactorily completed.

Trainee Interviews

All trainees enrolled in the program will receive an initial and Trainee/Post graduate interview conducted by the OJT program staff.

Trainee Wages

Contractors shall compensate trainees on a graduating pay scale based upon a percentage of the prevailing minimum journeyman wages (Davis-Bacon Act). Minimum pay shall be as follows:

60 percent	of the journeyman wage for the first half of the training period
75 percent	of the journeyman wage for the third quarter of the training period
90 percent	of the journeyman wage for the last quarter of the training period

In no instance shall a trainee be paid less than the local minimum wage. The Contractor shall adhere to the minimum hourly wage rate that will satisfy both the NC Department of Labor (NCDOL) and the Department.

Achieving or Failing to Meet Training Goals

The Contractor will be credited for each trainee employed by him on the contract work who is currently enrolled or becomes enrolled in an approved program and who receives training for at least 50 percent of the specific program requirement. Trainees will be allowed to be transferred between projects if required by the Contractor's scheduled workload to meet training goals.

If a contractor fails to attain their training assignments for the calendar year, they may be taken off the NCDOT's Bidders List.

Measurement and Payment

No compensation will be made for providing required training in accordance with these contract documents.

STANDARD SPECIAL PROVISION
MINIMUM WAGES
GENERAL DECISION NC180103 01/05/2018 NC103

Z-103

Date: January 5, 2018

General Decision Number: NC180103 01/05/2018 NC103

Superseded General Decision Numbers: NC20170103

State: North Carolina

Construction Type: HIGHWAY

COUNTIES:

Brunswick	Greene	Onslow
Cumberland	Hoke	Pender
Currituck	Johnston	Pitt
Edgecombe	Nash	Wake
Franklin	New Hanover	Wayne

HIGHWAY CONSTRUCTION PROJECTS (excluding tunnels, building structures in rest area projects & railroad construction; bascule, suspension & spandrel arch bridges designed for commercial navigation, bridges involving marine construction; and other major bridges).

Note: Under Executive Order (EO) 13658, an hourly minimum wage of $10.35 for calendar year 2018 that applies to all contracts subject to the Davis-Bacon Act for which the contract is awarded (and any solicitation was issued) on or after January 1, 2015. If this contract is covered by the EO, the contractor must pay all workers in any classification listed on this wage determination at least $10.35 per hour (or the applicable wage rate listed on this wage determination, if it is higher) for all hours spent performing on the contract for calendar year 2018. The EO minimum wage rate will be adjusted annually. Please note that this EO applies to the above-mentioned types of contracts entered into by the federal government that are subject to the Davis-Bacon Act itself, but it does not apply to contracts subject only to the Davis-Bacon Related Acts, including those set forth at 29 CFR 5.1(a)(2) – (60). Additional information on contractor requirements and worker protections under the EO is available at www.dol.gov/whd/govcontracts.

Modification Number	Publication Date
0	01/05/2018

SUNC2014-005 11/17/2014

	Rates	Fringes
BLASTER	21.04	
CARPENTER	13.72	
CEMENT MASON/CONCRETE FINISHER	14.48	
ELECTRICIAN		
Electrician	17.97	
Telecommunications Technician	16.79	.63
IRONWORKER	16.02	

	Rates	Fringes
LABORER		
Asphalt Raker and Spreader	12.46	
Asphalt Screed/Jackman	14.33	
Carpenter Tender	12.88	
Cement Mason/Concrete Finisher Tender	12.54	
Common or General	10.20	
Guardrail/Fence Installer	12.87	
Pipelayer	12.17	
Traffic Signal/Lighting Installer	14.89	
PAINTER		
Bridge	24.57	
POWER EQUIPMENT OPERATORS		
Asphalt Broom Tractor	11.85	
Bulldozer Fine	17.04	
Bulldozer Rough	14.34	
Concrete Grinder/Groover	20.34	2.30
Crane Boom Trucks	20.54	
Crane Other	20.08	
Crane Rough/All-Terrain	20.67	
Drill Operator Rock	14.38	
Drill Operator Structure	21.14	
Excavator Fine	16.60	
Excavator Rough	14.00	
Grader/Blade Fine	18.47	
Grader/Blade Rough	14.62	
Loader 2 Cubic Yards or Less	13.76	
Loader Greater Than 2 Cubic Yards	14.14	
Material Transfer Vehicle (Shuttle Buggy)	15.18	
Mechanic	17.55	
Milling Machine	15.36	
Off-Road Hauler/Water Tanker	11.36	
Oiler/Greaser	13.55	
Pavement Marking Equipment	12.11	
Paver Asphalt	15.59	
Paver Concrete	18.20	
Roller Asphalt Breakdown	12.45	
Roller Asphalt Finish	13.85	
Roller Other	11.36	
Scraper Finish	12.71	
Scraper Rough	11.35	
Slip Form Machine	16.50	
Tack Truck/Distributor Operator	14.52	
TRUCK DRIVER		
GVWR of 26,000 Lbs or Less	11.12	
GVWR of 26,000 Lbs or Greater	12.37	

Welders – Receive rate prescribed for craft performing operation to which welding is incidental.

Note: Executive Order (EO) 13706, Establishing Paid Sick Leave for Federal Contractors applies to all contracts subject to the Davis-Bacon Act for which the contract is awarded (and any

solicitation was issued) on or after January 1, 2017. If this contract is covered by the EO, the contractor must provide employees with 1 hour of paid sick leave for every 30 hours they work, up to 56 hours of paid sick leave each year. Employees must be permitted to use paid sick leave for their own illness, injury or other health-related needs, including preventive care; to assist a family member (or person who is like family to the employee) who is ill, injured, or has other health-related needs, including preventive care; or for reasons resulting from, or to assist a family member (or person who is like family to the employee) who is a victim of, domestic violence, sexual assault, or stalking. Additional information on contractor requirements and worker protections under the EO is available at www.dol.gov/whd/govcontracts.

Unlisted classifications needed for work not included within the scope of the classifications listed may be added after award only as provided in the labor standards contract clauses (29 CFR 5.5(a)(1)(ii)).

The body of each wage determination lists the classification and wage rates that have been found to be prevailing for the cited type(s) of construction in the area covered by the wage determination. The classifications are listed in alphabetical order of "identifiers" that indicate whether the particular rate is a union rate (current union negotiated rate for local), a survey rate (weighted average rate) or a union average rate (weighted union average rate).

Union Rate Identifiers

A four letter classification abbreviation identifier enclosed in dotted lines beginning with characters other than "SU" or "UAVG" denotes that the union classification and rate were prevailing for that classification in the survey. Example: PLUM0198-005 07/01/2014. PLUM is an abbreviation identifier of the union which prevailed in the survey for this classification, which in this example would be Plumbers. 0198 indicates the local union number or district council number where applicable, i.e., Plumbers Local 0198. The next number, 005 in the example, is an internal number used in processing the wage determination. 07/01/2014 is the effective date of the most current negotiated rate, which in this example is July 1, 2014.

Union prevailing wage rates are updated to reflect all rate changes in the collective bargaining agreement (CBA) governing this classification and rate.

Survey Rate Identifiers

Classifications listed under the "SU" identifier indicate that no one rate prevailed for this classification in the survey and the published rate is derived by computing a weighted average rate based on all the rates reported in the survey for that classification. As this weighted average rate includes all rates reported in the survey, it may include both union and non-union rates. Example: SULA2012-007 5/13/2014. SU indicates the rates are survey rates based on a weighted average calculation of rates and are not majority rates. LA indicates the State of Louisiana. 2012 is the year of survey on which these classifications and rates are based. The next number, 007 in the example, is an internal number used in producing the wage determination. 5/13/2014 indicates the survey completion date for the classifications and rates under that identifier. Survey wage rates are not updated and remain in effect until a new survey is conducted.

Union Average Rate Identifiers

Classification(s) listed under the UAVG identifier indicate that no single majority rate prevailed for those classifications; however, 100% of the data reported for the classifications was union data. EXAMPLE: UAVG-OH-0010 08/29/2014. UAVG indicates that the rate is a weighted union average rate. OH indicates the state. The next number, 0010 in the example, is an internal number used in producing the wage determination. 08/29/2014 indicates the survey completion date for the classifications and rates under that identifier.

A UAVG rate will be updated once a year, usually in January of each year, to reflect a weighted average of the current negotiated/CBA rate of the union locals from which the rate is based.

WAGE DETERMINATION APPEALS PROCESS

1.) Has there been an initial decision in the matter? This can be:

* an existing published wage determination
* a survey underlying a wage determination
* a Wage and Hour Division letter setting forth a position on a wage determination matter
* a conformance (additional classification and rate) ruling

On survey related matters, initial contact, including requests for summaries of surveys, should be with the Wage and Hour Regional Office for the area in which the survey was conducted because those Regional Offices have responsibility for the Davis-Bacon survey program. If the response from this initial contact is not satisfactory, then the process described in 2.) and 3.) should be followed.

With regard to any other matter not yet ripe for the formal process described here, initial contact should be with the Branch of Construction Wage Determinations. Write to:

Branch of Construction Wage Determinations
Wage and Hour Division
U. S. Department of Labor
200 Constitution Avenue, N.W.
Washington, D.C. 20210

2.) If the answer to the question in 1.) is yes, then an interested party (those affected by the action) can request review and reconsideration from the Wage and Hour Administrator (See 29 CFR Part 1.8 and 29 CFR Part 7). Write to:

Wage and Hour Administrator
U.S. Department of Labor
200 Constitution Avenue, N.W.
Washington, D.C. 20210

The request should be accompanied by a full statement of the interested party's position and by any information (wage payment data, project description, area practice material, etc.) that the requestor considers relevant to the issue.

3.) If the decision of the Administrator is not favorable, an interested party may appeal directly to the Administrative Review Board (formerly the Wage Appeals Board). Write

to:

Administrative Review Board
U.S. Department of Labor
200 Constitution Avenue, N.W.
Washington, D.C. 20210

4.) All decisions by the Administrative Review Board are final.

END OF GENERAL DECISION

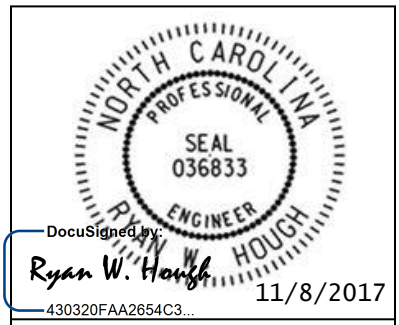

Document not considered final unless all signatures completed.

Signals and Intelligent Transportation Systems
Project Special Provisions
(Version 18.1)

Prepared By: RWH

Contents

1. 2018 STANDARD SPECIFICATIONS FOR ROADS & STRUCTURES 3
1.1. GENERAL REQUIREMENTS – CONSTRUCTION METHODS (1700-3(K)) 3
2. SIGNAL HEADS 3
2.1. MATERIALS 3
A. General: 3
B. Vehicle Signal Heads: 5
C. Pedestrian Signal Heads: 7
D. Signal Cable: 9
3. TRAFFIC SIGNAL SUPPORTS 10
3.1. METAL TRAFFIC SIGNAL SUPPORTS – ALL POLES 10
A. General: 10
B. Materials: 12
C. Construction Methods: 13
3.2. METAL POLE UPRIGHTS (VERTICAL MEMBERS) 13
A. Materials: 13
B. Construction Methods: 15
3.3. DRILLED PIER FOUNDATIONS FOR METAL TRAFFIC SIGNAL POLES 15
A. Description: 16
B. Soil Test and Foundation Determination: 16
C. Drilled Pier Construction: 18
3.4. CUSTOM DESIGN OF TRAFFIC SIGNAL SUPPORTS 19
A. General: 19
B. Metal Poles: 20
3.5. POLE NUMBERING SYSTEM 22
A. New Poles 22
3.6. MEASUREMENT AND PAYMENT 22
4. PROTECTIVE COATING FOR METAL POLES 22
4.1. DESCRIPTION 22
4.2. MATERIALS 22
4.3. COATING SHOP APPROVAL 23
4.4. POWDER COATING 24
A. Galvanizing 24
B. Surface Preparation 24
C. Powder Coating Application and Curing 24
D. Quality Control 25
E. Storage, Shipping, and Handling 25
F. Repair of Powder Coated Material 25
4.5. ACRYLIC PRIMER AND TOP COAT PAINT SYSTEM 4 (MODIFIED) 25
A. Description 25
B. Surface Preparation 26

C. Materials *26*
D. Painting *26*
E. Curing *27*
F. Inspection *27*
G. Handling *27*
H. Repair of Damaged Coating *27*
4.6. MEASUREMENT AND PAYMENT 27

5. CONTROLLERS WITH CABINETS 27
5.1. MATERIALS – TYPE 2070L CONTROLLERS 27
5.2. MATERIALS – GENERAL CABINETS 28
5.3. MATERIALS – TYPE 170E CABINETS 29
A. Type 170 E Cabinets General: *29*
B. Type 170 E Cabinet Electrical Requirements: *29*
C. Type 170 E Cabinet Physical Requirements: *37*
D. Model 2018 Enhanced Conflict Monitor: *39*
E. Preemption and Sign Control Box *49*
5.4. MATERIALS – TYPE 170 DETECTOR SENSOR UNITS 52
5.5. MATERIALS – TYPE 2070E CONTROLLERS 52
5.6. MATERIALS – TYPE 2070LX CONTROLLERS 52

6. ETHERNET EDGE SWITCH 53
6.1. DESCRIPTION 53
A. Ethernet Edge Switch: *53*
B. Network Management: *53*
6.2. MATERIALS 53
A. General: *53*
B. Compatibility Acceptance *53*
C. Standards: *53*
D. Functional: *54*
E. Physical Features: *55*
F. Management Capabilities: *55*
G. Electrical Specifications: *57*
H. Environmental Specifications: *57*
I. Ethernet Patch Cable: *57*
6.3. CONSTRUCTION METHODS 58
A. General: *58*
B. Edge Switch: *58*
6.4. MEASURMENT AND PAYMENT 58

7. PRETERMINATED FIBER OPTIC DROP CABLE 58
7.1. DESCRIPTION 58
7.2. MATERIALS 58
A. Drop Cable Assembly: *59*
B. Communications Cable Identification Markers: *60*
7.3. CONSTRUCTION METHODS 60
A. General: *60*
B. Aerial Installation: *61*
C. Underground Installation: *61*
D. Installation of Drop Cable: *62*
7.4. MEASURMENT AND PAYMENT 62

1. 2018 STANDARD SPECIFICATIONS FOR ROADS & STRUCTURES

The 2018 <u>Standard Specifications</u> are revised as follows:

1.1. GENERAL REQUIREMENTS – Construction Methods (1700-3(K))

Page 17-4, revise sentence starting on line 14 to read "Modify existing electrical services, as necessary, to meet the grounding requirements of the NEC, these *Standard Specifications, Standard Drawings*, and the project plans."

Page 17-4, revise sentence beginning on line 21 to read "Furnish and install additional ground rods to grounding electrode system as necessary to meet the *Standard Specifications, Standard Drawings*, and test requirements."

2. SIGNAL HEADS

2.1. MATERIALS

A. General:

Fabricate vehicle signal head housings and end caps from die-cast aluminum. Fabricate 12-inch and 16-inch pedestrian signal head housings and end caps from die-cast aluminum. Fabricate 9-inch pedestrian signal head housings, end caps, and visors from virgin polycarbonate material. Provide visor mounting screws, door latches, and hinge pins fabricated from stainless steel. Provide interior screws, fasteners, and metal parts fabricated from stainless steel.

Fabricate tunnel and traditional visors from sheet aluminum.

Paint all surfaces inside and outside of signal housings and doors. Paint outside surfaces of tunnel and traditional visors, wire outlet bodies, wire entrance fitting brackets and end caps when supplied as components of messenger cable mounting assemblies, pole and pedestal mounting assemblies, and pedestrian pushbutton housings. Have electrostatically-applied, fused-polyester paint in highway yellow (Federal Standard 595C, Color Chip Number 13538) a minimum of 2.5 to 3.5 mils thick. Do not apply paint to the latching hardware, rigid vehicle signal head mounting brackets for mast-arm attachments, messenger cable hanger components or balance adjuster components.

Have the interior surfaces of tunnel and traditional visors painted an alkyd urea black synthetic baking enamel with a minimum gloss reflectance and meeting the requirements of MIL-E-10169, "Enamel Heat Resisting, Instrument Black."

Where required, provide polycarbonate signal heads and visors that comply with the provisions pertaining to the aluminum signal heads listed on the QPL with the following exceptions:

Fabricate signal head housings, end caps, and visors from virgin polycarbonate material. Provide UV stabilized polycarbonate plastic with a minimum thickness of 0.1 ± 0.01 inches that is highway yellow (Federal Standard 595C, Color Chip 13538). Ensure the color is incorporated into the plastic material before molding the signal head housings and end caps. Ensure the plastic formulation provides the following physical properties in the assembly (tests may be performed on separately molded specimens):

Test	Required	Method
Specific Gravity	1.17 minimum	ASTM D 792
Flammability	Self-extinguishing	ASTM D 635
Tensile Strength, yield, PSI	8500 minimum	ASTM D 638
Izod impact strength, ft-lb/in [notched, 1/8 inch]	12 minimum	ASTM D 256

For pole mounting, provide side of pole mounting assemblies with framework and all other hardware necessary to make complete, watertight connections of the signal heads to the poles and pedestals. Fabricate the mounting assemblies and frames from aluminum with all necessary hardware, screws, washers, etc. to be stainless steel. Provide mounting fittings that match the positive locking device on the signal head with the serrations integrally cast into the brackets. Provide upper and lower pole plates that have a 1 ¼-inch vertical conduit entrance hubs with the hubs capped on the lower plate and 1 ½-inch horizontal hubs. Ensure that the assemblies provide rigid attachments to poles and pedestals so as to allow no twisting or swaying of the signal heads. Ensure that all raceways are free of sharp edges and protrusions, and can accommodate a minimum of ten Number 14 AWG conductors.

For pedestal mounting, provide a post-top slipfitter mounting assembly that matches the positive locking device on the signal head with serrations integrally cast into the slipfitter. Provide stainless steel hardware, screws, washers, etc. Provide a minimum of six 3/8 X 3/4-inch long square head bolts for attachment to pedestal. Provide a center post for multi-way slipfitters.

For light emitting diode (LED) traffic signal modules, provide the following requirements for inclusion on the Department's Qualified Products List for traffic signal equipment.

1. Sample submittal,
2. Third-party independent laboratory testing results for each submitted module with evidence of testing and conformance with all of the Design Qualification Testing specified in section 6.4 of each of the following Institute of Transportation Engineers (ITE) specifications:
   - Vehicle Traffic Control Signal Heads – Light Emitting Diode (LED) Circular Signal Supplement
   - Vehicle Traffic Control Signal Heads – Light Emitting Diode (LED) Vehicle Arrow Traffic Signal Supplement
   - Pedestrian Traffic Control Signal Indications –Light Emitting Diode (LED) Signal Modules.

   (Note: The Department currently recognizes two approved independent testing laboratories. They are Intertek ETL Semko and Light Metrics, Incorporated with Garwood Laboratories. Independent laboratory tests from other laboratories may be considered as part of the QPL submittal at the discretion of the Department,
3. Evidence of conformance with the requirements of these specifications,
4. A manufacturer's warranty statement in accordance with the required warranty, and
5. Submittal of manufacturer's design and production documentation for the model, including but not limited to, electrical schematics, electronic component values, proprietary part numbers, bill of materials, and production electrical and photometric test parameters.

6. Evidence of approval of the product to bear the Intertek ETL Verified product label for LED traffic signal modules.

In addition to meeting the performance requirements for the minimum period of 60 months, provide a written warranty against defects in materials and workmanship for the modules for a period of 60 months after installation of the modules. During the warranty period, the manufacturer must provide new replacement modules within 45 days of receipt of modules that have failed at no cost to the State. Repaired or refurbished modules may not be used to fulfill the manufacturer's warranty obligations. Provide manufacturer's warranty documentation to the Department during evaluation of product for inclusion on Qualified Products List (QPL).

B. Vehicle Signal Heads:

Comply with the ITE standard "Vehicle Traffic Control Signal Heads". Provide housings with provisions for attaching backplates.

Provide visors that are 8 inches in length for 8-inch vehicle signal head sections. Provide visors that are 10 inches in length for 12-inch vehicle signal heads.

Provide a termination block with one empty terminal for field wiring for each indication plus one empty terminal for the neutral conductor. Have all signal sections wired to the termination block. Provide barriers between the terminals that have terminal screws with a minimum Number 8 thread size and that will accommodate and secure spade lugs sized for a Number 10 terminal screw.

Mount termination blocks in the yellow signal head sections on all in-line vehicle signal heads. Mount the termination block in the red section on five-section vehicle signal heads.

Furnish vehicle signal head interconnecting brackets. Provide one-piece aluminum brackets less than 4.5 inches in height and with no threaded pipe connections. Provide hand holes on the bottom of the brackets to aid in installing wires to the signal heads. Lower brackets that carry no wires and are used only for connecting the bottom signal sections together may be flat in construction.

For messenger cable mounting, provide messenger cable hangers, wire outlet bodies, balance adjusters, bottom caps, wire entrance fitting brackets, and all other hardware necessary to make complete, watertight connections of the vehicle signal heads to the messenger cable. Fabricate messenger cable hanger components, wire outlet bodies and balance adjuster components from stainless steel or malleable iron galvanized in accordance with ASTM A153 (Class A) or ASTM A123. Provide serrated rings made of aluminum. Provide messenger cable hangers with U-bolt clamps. Fabricate washers, screws, hex-head bolts and associated nuts, clevis pins, cotter pins, U-bolt clamps and nuts from stainless steel.

For mast-arm mounting, provide rigid vehicle signal head mounting brackets and all other hardware necessary to make complete, watertight connections of the vehicle signal heads to the mast arms and to provide a means for vertically adjusting the vehicle signal heads to proper alignment. Fabricate the mounting assemblies from aluminum, and provide serrated rings made of aluminum. Provide stainless steel cable attachment assemblies to secure the brackets to the mast arms. Ensure all fastening hardware and fasteners are fabricated from stainless steel.

Provide LED vehicular traffic signal modules (hereafter referred to as modules) that consist of an assembly that uses LEDs as the light source in lieu of an incandescent lamp for use in traffic signal sections. Use LEDs that are aluminum indium gallium phosphorus (AlInGaP) technology for red and yellow indications and indium gallium nitride (InGaN) for green indications. Install the ultra bright type LEDs that are rated for 100,000 hours of continuous operation from -40°F to +165°F. Design

modules to have a minimum useful life of 60 months and to meet all parameters of this specification during this period of useful life.

For the modules, provide spade terminals crimped to the lead wires and sized for a #10 screw connection to the existing terminal block in a standard signal head. Do not provide other types of crimped terminals with a spade adapter.

Ensure the power supply is integral to the module assembly. On the back of the module, permanently mark the date of manufacture (month & year) or some other method of identifying date of manufacture.

Tint the red, yellow and green lenses to correspond with the wavelength (chromaticity) of the LED. Transparent tinting films are unacceptable. Provide a lens that is integral to the unit with a smooth outer surface.

1. LED Circular Signal Modules:

Provide modules in the following configurations: 12-inch circular sections. All makes and models of LED modules purchased for use on the State Highway System shall appear on the current NCDOT Traffic Signal Qualified Products List (QPL).

Provide the manufacturer's model number and the product number (assigned by the Department) for each module that appears on the 2018 or most recent Qualified Products List. In addition, provide manufacturer's certification in accordance with Article 106-3 of the *Standard Specifications,* that each module meets or exceeds the ITE "Vehicle Traffic Control Signal Heads – Light Emitting Diode (LED) Circular Signal Supplement" dated June 27, 2005 (hereafter referred to as VTCSH Circular Supplement) and other requirements stated in this specification.

Provide modules that meet the following requirements when tested under the procedures outlined in the VTCSH Circular Supplement:

Module Type	Max. Wattage at 165° F	Nominal Wattage at 77° F
12-inch red circular	17	11
12-inch green circular	15	15

For yellow circular signal modules, provide modules tested under the procedures outlined in the VTCSH Circular Supplement to insure power required at 77° F is 22 Watts or less for the 12-inch circular module and 13 Watts or less for the 8-inch circular module.

Note: Use a wattmeter having an accuracy of ±1% to measure the nominal wattage and maximum wattage of a circular traffic signal module. Power may also be derived from voltage, current and power factor measurements.

2. LED Arrow Signal Modules

Provide 12-inch omnidirectional arrow signal modules. All makes and models of LED modules purchased for use on the State Highway System shall appear on the current NCDOT Traffic Signal Qualified Products List (QPL).

Provide the manufacturer's model number and the product number (assigned by the Department) for each module that appears on the 2018 or most recent Qualified Products List. In addition, provide manufacturer's certification in accordance with Article 106-3 of the *Standard Specifications,* that each module meets or exceeds the requirements for 12-inch omnidirectional modules specified in the

ITE "Vehicle Traffic Control Signal Heads – Light Emitting Diode (LED) Vehicle Arrow Traffic Signal Supplement" dated July 1, 2007 (hereafter referred to as VTCSH Arrow Supplement) and other requirements stated in this specification.

Provide modules that meet the following requirements when tested under the procedures outlined in the VTCSH Arrow Supplement:

Module Type	Max. Wattage at 165° F	Nominal Wattage at 77° F
12-inch red arrow	12	9
12-inch green arrow	11	11

For yellow arrow signal modules, provide modules tested under the procedures outlined in the VTCSH Arrow Supplement to insure power required at 77° F is 12 Watts or less.

Note: Use a wattmeter having an accuracy of ±1% to measure the nominal wattage and maximum wattage of an arrow traffic signal module. Power may also be derived from voltage, current and power factor measurements.

3. LED U-Turn Arrow Signal Modules:

Provide modules in the following configurations: 12-inch left u-turn arrow signal modules and 12-inch right u-turn arrow signal modules.

Modules are not required to be listed on the ITS and Signals Qualified Products List. Provide manufacturer's certification in accordance with Article 106-3 of the *Standard Specifications,* that each module meets or exceeds the ITE "Vehicle Traffic Control Signal Heads – Light Emitting Diode (LED) Circular Signal Supplement" dated June 27, 2005 (hereafter referred to as VTCSH Circular Supplement) and other requirements stated in this specification.

Provide modules that have minimum maintained luminous intensity values that are not less than 16% of the values calculated using the method described in section 4.1 of the VTCSH Circular Supplement.

Provide modules that meet the following requirements when tested under the procedures outlined in the VTCSH Circular Supplement:

Module Type	Max. Wattage at 165° F	Nominal Wattage at 77° F
12-inch red u-turn arrow	17	11
12-inch green u-turn arrow	15	15

For yellow u-turn arrow signal modules, provide modules tested under the procedures outlined in the VTCSH Circular Supplement to ensure power required at 77° F is 22 Watts or less.

Note: Use a wattmeter having an accuracy of ±1% to measure the nominal wattage and maximum wattage of a circular traffic signal module. Power may also be derived from voltage, current and power factor measurements.

C. Pedestrian Signal Heads:

Provide pedestrian signal heads with international symbols that meet the MUTCD. Do not provide letter indications.

Comply with the ITE standard for "Pedestrian Traffic Control Signal Indications" and the following sections of the ITE standard for "Vehicle Traffic Control Signal Heads" in effect on the date of advertisement:

- Section 3.00 - “Physical and Mechanical Requirements”
- Section 4.01 - “Housing, Door, and Visor: General”
- Section 4.04 - “Housing, Door, and Visor: Materials and Fabrication”
- Section 7.00 - “Exterior Finish”

Provide a double-row termination block with three empty terminals and number 10 screws for field wiring. Provide barriers between the terminals that accommodate a spade lug sized for number 10 terminal screws. Mount the termination block in the hand section. Wire all signal sections to the terminal block.

Where required by the plans, provide 16-inch pedestrian signal heads with traditional three-sided, rectangular visors, 6 inches long. Where required by the plans, provide 12-inch pedestrian signal heads with traditional three-sided, rectangular visors, 8 inches long.

Provide 2-inch diameter pedestrian push-buttons with weather-tight housings fabricated from die-cast aluminum and threading in compliance with the NEC for rigid metal conduit. Provide a weep hole in the housing bottom and ensure that the unit is vandal resistant.

Provide push-button housings that are suitable for mounting on flat or curved surfaces and that will accept 1/2-inch conduit installed in the top. Provide units that have a heavy duty push-button assembly with a sturdy, momentary, normally-open switch. Have contacts that are electrically insulated from the housing and push-button. Ensure that the push-buttons are rated for a minimum of 5 mA at 24 volts DC and 250 mA at 12 volts AC.

Provide standard R10-3 signs with mounting hardware that comply with the MUTCD in effect on the date of advertisement. Provide R10-3E signs for countdown pedestrian heads and R10-3B for non-countdown pedestrian heads.

Design the LED pedestrian traffic signal modules (hereafter referred to as modules) for installation into standard pedestrian traffic signal sections that do not contain the incandescent signal section reflector, lens, eggcrate visor, gasket, or socket. Provide modules that consist of an assembly that uses LEDs as the light source in lieu of an incandescent lamp. Use LEDs that are of the latest aluminum indium gallium phosphorus (AlInGaP) technology for the Portland Orange hand and countdown displays. Use LEDs that are of the latest indium gallium nitride (InGaN) technology for the Lunar White walking man displays. Install the ultra-bright type LEDs that are rated for 100,000 hours of continuous operation from -40°F to +165°F. Design modules to have a minimum useful life of 60 months and to meet all parameters of this specification during this period of useful life.

Design all modules to operate using a standard 3 - wire field installation. Provide spade terminals crimped to the lead wires and sized for a #10 screw connection to the existing terminal block in a standard pedestrian signal housing. Do not provide other types of crimped terminals with a spade adapter.

Ensure the power supply is integral to the module assembly. On the back of the module, permanently mark the date of manufacture (month & year) or some other method of identifying date of manufacture.

Provide modules in the following configuration: 16-inch displays which have the solid hand/walking man overlay on the left and the countdown on the right, and 12-inch displays which have the solid hand/walking man module as an overlay. All makes and models of LED modules

purchased for use on the State Highway System shall appear on the current NCDOT Traffic Signal Qualified Products List (QPL).

Provide the manufacturer's model number and the product number (assigned by the Department) for each module that appears on the 2018 or most recent Qualified Products List. In addition, provide manufacturer's certification in accordance with Article 106-3 of the *Standard Specifications,* that each module meets or exceeds the ITE "Pedestrian Traffic Control Signal Indicators - Light Emitting Diode (LED) Signal Modules" dated August 04, 2010 (hereafter referred to as PTCSI Pedestrian Standard) and other requirements stated in this specification.

Provide modules that meet the following requirements when tested under the procedures outlined in the PTCSI Pedestrian Standard:

Module Type	Max. Wattage at 165° F	Nominal Wattage at 77° F
Hand Indication	16	13
Walking Man Indication	12	9
Countdown Indication	16	13

Note: Use a wattmeter having an accuracy of ±1% to measure the nominal wattage and maximum wattage of a circular traffic signal module. Power may also be derived from voltage, current and power factor measurements.

Provide module lens that is hard coated or otherwise made to comply with the material exposure and weathering effects requirements of the Society of Automotive Engineers (SAE) J576. Ensure all exposed components of the module are suitable for prolonged exposure to the environment, without appreciable degradation that would interfere with function or appearance.

Ensure the countdown display continuously monitors the traffic controller to automatically learn the pedestrian phase time and update for subsequent changes to the pedestrian phase time.

Ensure the countdown display begins normal operation upon the completion of the preemption sequence and no more than one pedestrian clearance cycle.

D. Signal Cable:

Furnish 16-4 and 16-7 signal cable that complies with IMSA specification 20-1 except provide the following conductor insulation colors:

- For 16-4 cable: white, yellow, red, and green
- For 16-7 cable: white, yellow, red, green, yellow with black stripe tracer, red with black stripe tracer, and green with black stripe tracer. Apply continuous stripe tracer on conductor insulation with a longitudinal or spiral pattern.

Provide a ripcord to allow the cable jacket to be opened without using a cutter. IMSA specification 19-1 will not be acceptable. Provide a cable jacket labeled with the IMSA specification number and provide conductors constructed of stranded copper.

3. TRAFFIC SIGNAL SUPPORTS

3.1. METAL TRAFFIC SIGNAL SUPPORTS – ALL POLES

A. General:

Furnish and install metal strain poles, grounding systems, and all necessary hardware. The work covered by this special provision includes requirements for the design, fabrication, and installation of both standard and custom/site specifically designed metal traffic signal supports and associated foundations.

Provide metal traffic signal support systems that contain no guy assemblies, struts, or stay braces. Provide designs of completed assemblies with hardware that equals or exceeds AASHTO *Standard Specifications for Structural Supports for Highway Signs, Luminaires and Traffic Signals* 6th Edition, 2013 (hereafter called 6th Edition AASHTO), including the latest interim specifications. Provide assemblies with a round or near-round (18 sides or more) cross-section, or a multi sided cross section with no less than six sides. The sides may be straight, convex, or concave.

Pole heights shown on signal plans are estimated from available data for bid purposes. Prior to furnishing metal signal poles, use field measurements and adjusted cross-sections to determine whether pole heights are sufficient to obtain required clearances. If pole heights are not sufficient, the Contractor should immediately notify the Engineer of the required revised pole heights.

Ensure that metal signal poles permit cables to be installed inside poles. For holes in the poles and arms used to accommodate cables, provide full-circumference grommets. Arm flange plate wire access holes should be deburred, non grommeted, and oversized to fit around the 2” diameter grommeted shaft flange plate wire access hole.

After fabrication, have steel poles, required mast arms, and all parts used in the assembly hot-dip galvanized per section 1076. Design structural assemblies with weep holes large enough and properly located to drain molten zinc during the galvanization process. Provide hot-dip galvanizing on structures that meets or exceeds ASTM Standard A-123. Provide galvanizing on hardware that meets or exceeds ASTM Standard A-153. Ensure that threaded material is brushed and retapped as necessary after galvanizing. Perform repair of damaged galvanizing that complies with the following:

Repair of Galvanizing.....Article 1076-7

Standard Drawings for Metal Poles are available that supplement these project special provisions. These drawings are located on the Department’s website:

https://connect.ncdot.gov/resources/safety/pages/ITS-Design-Resources.aspx

Comply with article 1098-1B of the *2018 STANDARD SPECIFICATIONS FOR ROADS & STRUCTURES*, hereinafter referred to as the *Standard Specifications* for submittal requirements. Furnish shop drawings for approval. Provide the copies of detailed shop drawings for each type of structure as summarized below. Ensure that shop drawings include material specifications for each component and identify welds by type and size on the detail drawing only, not in table format. **Do not release structures for fabrication until shop drawings have been approved by NCDOT**. Provide an itemized bill of materials for all structural components and associated connecting hardware on the drawings.

Comply with article 1098-1A of the *Standard Specifications* for Qualified Products List (QPL) submittals. All shop drawings must include project location description, signal inventory number(s) and a project number or work order number on the drawings.

Summary of information required for metal pole review submittal:

Item	Hardcopy Submittal	Electronic Submittal	Comments / Special Instructions
Sealed, Approved Signal Plan/Loading Diagram	1	1	All structure design information needs to reflect the latest approved signal plans
Custom Pole Shop Drawings	4 sets	1 set	Show NCDOT inventory number(s), contractor's name and relevant revision number in the title block. All drawings must have a unique drawing number for each project and identified for multiple pages.
Standard Pole Shop Drawings (from the QPL)	4 sets	1 set	Submit drawings on 11" x 17" format media. Show NCDOT inventory number(s), contractor's name and relevant revision number in the title block. All drawings must have a unique drawing number for each project and identified for multiple pages.
Structure Calculations	1 set	1 set	Not required for Standard QPL Poles
Standard Pole Foundation Drawings	1 set	1 set	Submit drawings on 11" x 17" format media. Submit a completed Standard Foundation Selection form for each pole using foundation table on Metal Pole Drawing M-8.
Custom Foundation Drawings	4 sets	1 set	Submit drawings on 11" x 17" format media. Show NCDOT inventory number(s), contractor's name and relevant revision number in the title block. All drawings must have a unique drawing number for each project and identified for multiple pages. If QPL Poles are used, include the corresponding QPL pole shop drawings with this submittal.
Foundation Calculations	1	1	**Submit copies of LPILE input, output and pile tip deflection graph per Section 11.4 of this specification for each foundation.** Not required for Standard QPL Poles
Soil Boring Logs and Report	1	1	Report should include a location plan and a soil classification report including soil capacity, water level, hammer efficiency, soil bearing pressure, soil density, etc. for each pole.

NOTE – All shop drawings and custom foundation design drawings must be sealed by a Professional Engineer licensed in the state of North Carolina. All geotechnical information must be sealed by either a Professional Engineer or geologist licensed in the state of North Carolina. Include

a title block and revision block on the shop drawings and foundation drawings showing the NCDOT inventory number.

Shop drawings and foundation drawings may be submitted together or separately for approval. However, shop drawings must be approved before foundations can be reviewed. Foundation designs will be returned without review if the associated shop drawing has not been approved. Boring reports should include the following: Engineer's summary, boring location maps, soil classification per AASHTO Classification System, hammer efficiency, and Metal Pole Standard Foundation Selection Form. Incomplete submittals will be returned without review. The Reviewer has the right to request additional analysis and copies of the calculations to expedite the approval process.

B. Materials:

Fabricate metal pole and arm shaft from coil or plate steel to meet the requirements of ASTM A 595 Grade A tubes. For structural steel shapes, plates and bars use A572 Gr 50 min or ASTM A709 Gr 50 min. Provide pole and arm shafts that are round in cross section or multisided tubular shapes and have a uniform linear taper of 0.14 in/ft. Construct shafts from one piece of single ply plate or coil so there are no circumferential weld splices. Galvanize in accordance with AASHTO M 111 or an approved equivalent.

Use the submerged arc process or other NCDOT previously approved process suitable for pole shaft and arms to continuously weld pole shafts and arm shafts along their entire length. The longitudinal seam weld will be finished flush to the outside contour of the base metal. Ensure shafts have no circumferential welds except at the lower end joining the shaft to the pole base and arm base. Use full penetration groove welds with backing ring for all tube-to-transverse-plate connections in accordance with 6th Edition AASHTO. Provide welding that conforms to Article 1072-18 of the *Standard Specifications*, except that no field welding on any part of the pole will be permitted unless approved by a qualified engineer.

Refer to Metal Pole Standard Drawing Sheets M2 through M5 for fabrication details. Fabricate anchor bases and mast arm connecting plates from plate steel meeting, as a minimum, the requirements of ASTM A572 Gr 50, AASHTO M270 Gr 50, ASTM A709 Gr50, or an approved equivalent. Conform to the applicable bolt pattern and orientation as shown on Metal Pole Standard Drawing Sheet M2.

Ensure all hardware is galvanized steel or stainless steel. The Contractor is responsible for ensuring that the designer/fabricator specifies connecting hardware and/or materials that do not create a dissimilar metal corrosive reaction.

Provide a minimum of four (4) 1-1/2" diameter high strength bolts for connection between arm plate and pole plate. Increase number of bolts to six (6) 1-1/2" diameter high strength bolts when arm lengths are greater than 50'-0" long.

Unless otherwise required by the design, ensure each anchor rod is 2" diameter and 60" length. Provide 10" minimum thread projection at the top of the rod, and 8" minimum at the bottom of the rod. Use anchor rod assembly and drilled pier foundation materials that meet the *Foundations and Anchor Rod Assemblies for Metal Poles* provision.

For each structural bolt and other steel hardware, hot dip galvanizing shall conform to the requirements of AASHTO M 232 (ASTM A 153). Ensure end caps for poles or mast arms are constructed of cast aluminum conforming to Aluminum Alloy 356.0F.

Provide a circular anchor bolt lock plate that will be secured to the anchor bolts at the embedded end with 2 washers and 2 nuts. Provide a base plate template that matches the bolt circle diameter of the anchor bolt lock plate. Construct plates and templates from ¼" minimum thick steel with a minimum width of 4". Galvanizing is not required for both plates.

Provide 4 heavy hex nuts and 4 flat washers for each anchor bolt. For nuts, use AASHTO M291 grade 2H, DH, or DH3 or equivalent material. For flat washers, use AASHTO M293 or equivalent material.

C. Construction Methods:

Erect signal support poles only after concrete has attained a minimum allowable compressive strength of 3000 psi. Install anchor rod assemblies in accordance with the *Foundations and Anchor Rod Assemblies for Metal Poles* provision.

For further construction methods, see construction methods for Metal Strain Pole, or Metal Pole with Mast Arm.

Connect poles to grounding electrodes and bond them to the electrical service grounding electrodes.

For holes in the poles used to accommodate cables, install grommets before wiring pole or arm. Do not cut or split grommets.

Attach the terminal compartment cover to the pole by a sturdy chain or cable. Ensure the chain or cable is long enough to permit the cover to hang clear of the compartment opening when the cover is removed, and is strong enough to prevent vandalism. Ensure the chain or cable will not interfere with service to the cables in the pole base.

Attach cap to pole with a sturdy chain or cable. Ensure the chain or cable is long enough to permit the cap to hang clear of the opening when the cap is removed.

Perform repair of damaged galvanizing that complies with the *Standard Specifications*, Article 1076-7 "Repair of Galvanizing."

Install galvanized wire mesh around the perimeter of the base plate to cover the gap between the base plate and top of foundation for debris and pest control.

Install a ¼" thick plate for concrete foundation tag to include: concrete grade, depth, diameter, and reinforcement sizes of the installed foundation.

3.2. METAL POLE UPRIGHTS (VERTICAL MEMBERS)

A. Materials:

- Provide tapered tubular shafts and fabricated of steel conforming to ASTM A-595 Grade A or an approved equivalent.
- Hot-dip galvanize poles in accordance with AASHTO M 111 or an approved equivalent.
- Have shafts that are continuously welded for the entire length by the submerged arc process, and with exposed welds ground or rolled smooth and flush with the base metal.

Provide welding that conforms to Article 1072-18 of the *Standard Specification* except that no field welding on any part of the pole will be permitted.

- Have Shafts with no circumferential welds except at the lower end joining the shaft to the base.
- Have anchor bases for steel poles fabricated from plate steel meeting as a minimum the requirements of ASTM A572 Gr 50, AASHTO M270 Gr 50, ASTM A709 Gr 50, or an approved equivalent.

Provide a grounding lug(s) in the approximate vicinity of the messenger cable clamp for bonding and grounding messenger cable. Lugs must accept #4 or #6 AWG wire to bond messenger cables to the pole in order to provide an effective ground fault circuit path. Refer to Metal Pole Standard Drawing Sheet M6 for construction details.

Have poles permanently stamped above the hand holes with the identification tag details as shown on Metal Pole Standard Drawing Sheet M2.

Provide liquid tight flexible metal conduit (Type LFMC), liquid tight flexible nonmetallic conduit (Type LFNC), high density polyethylene conduit (Type HDPE), or approved equivalent to isolate conductors feeding luminaires.

Fabricate poles from a single piece of steel or aluminum with single line seam weld with no transverse butt welds. Fabrication of two ply pole shafts is unacceptable with the exception of fluted shafts. Provide tapers for all shafts that begin at base and that have diameters which decrease uniformly at the rate of not more than 0.14 inch per foot (11.7 millimeters per meter) of length.

Provide four anchor nuts and four washers for each anchor bolt. Ensure that anchor bolts have required diameters, lengths, and positions, and will develop strengths comparable to their respective poles.

Provide a terminal compartment with cover and screws in each pole that encompasses the hand hole and contains a 12-terminal barrier type terminal block. Provide two terminal screws with a removable shorting bar between them for each termination. Furnish terminal compartment covers attached to the pole by a sturdy chain or cable approved by the Engineer. Ensure that the chain or cable is long enough to permit the cover to hang clear of the compartment opening when the cover is removed, and is strong enough to prevent vandals from being able to disconnect the cover from the pole. Ensure that the chain or cable will not interfere with service to the cables in the pole base.

Install grounding lugs that will accept #4 or #6 AWG wire to electrically bond messenger cables to the pole. Refer to Metal Pole Standard Drawing Sheet M6 for construction details.

For each pole, provide a 1/2 inch minimum thread diameter, coarse thread stud and nut for grounding which will accommodate #6 AWG ground wire. Ensure that the lug is electrically bonded to the pole and is conveniently located inside the pole at the hand hole.

Provide a removable pole cap with stainless steel attachment screws for the top of each pole. Ensure that the cap is cast aluminum conforming to Aluminum Association Alloy 356.0F. Furnish cap attached to the pole with a sturdy chain or cable approved by the Engineer. Ensure that the chain or cable is long enough to permit the cap to hang clear of the pole-top opening when the cap is removed.

When required by the plans, furnish couplings 42 inches above the bottom of the base for mounting of pedestrian pushbuttons. Provide mounting points consisting of 1-1/2 inch internally threaded half-

couplings that comply with the NEC and that are mounted within the poles. Ensure that couplings are essentially flush with the outside surfaces of the poles and are installed before any required galvanizing. Provide a threaded plug in each mounting point. Ensure that the surface of the plug is essentially flush with the outer end of the mounting point when installed and has a recessed hole to accommodate a standard wrench.

1. STRAIN POLE SHAFTS

Provide 2 messenger cable (span wire) clamps and associated hardware for attachment of messenger cable. Ensure that diameter of the clamp is appropriate to its location on the pole and is appropriately designed to be adjustable from 1'-6" below the top, down to 6'-6" below the top of the pole. Do not attach more than one support cable to a messenger cable clamp.

Provide a minimum of three (3) 2 inch (50 mm) holes equipped with an associated coupling and weatherhead on the messenger cable load side of the pole to accommodate passage of signal cables from inside the pole. Provide galvanized threaded plugs for all unused couplings at pole entrance points. Refer to Metal Pole Standard Drawing Sheet M3 for fabrication details.

Ensure that allowable pole deflection does not exceed that allowed per 6th Edition AASHTO. Ensure maximum deflection at the top of the pole does not exceed 2.5 percent of the pole height.

B. Construction Methods:

Install metal poles, hardware, and fittings as shown on the manufacturer's installation drawings. Install metal poles so that when the pole is fully loaded it is within 1 degree 40 minutes (1°40') of vertical. Install poles with the manufacturer's recommended "rake." Use threaded leveling nuts to establish rake if required.

3.3. DRILLED PIER FOUNDATIONS FOR METAL TRAFFIC SIGNAL POLES

Analysis procedures and formulas shall be based on AASHTO 6th Edition, latest ACI code and the *Drilled Shafts: Construction Procedures and Design Methods* FHWA-NHI-10-016 manual. Design methods based on engineering publications or research papers needs to have prior approval from NCDOT. The Department reserves the right to accept or disapprove any method used for the analysis.

Use a Factor of Safety of 1.33 for torsion and 2.0 for bending for the foundation design.

Foundation design for lateral load shall not exceed 1" lateral deflection at top of foundation.

For lateral analysis, use LPILE Plus V6.0 or later. Inputs, results and corresponding graphs are to be submitted with the design calculations.

Skin Friction is to be calculated using the α-method for cohesive soils and the β-method for cohesion-less soils (**Broms method will not be accepted**). Detailed descriptions of the "α" and "β" methods can be found in *FHWA-NHI-10-016*.

Omit first 2.5ft for cohesive soils when calculating skin friction.

When hammer efficiency is not provided, assume a value of 0.70.

Design all custom foundations to carry the maximum capacity of each metal pole. For standard case strain poles only, if a custom foundation is designed, use the actual shear, axial and moment reactions from the Standard Foundation Selection Table shown on Standard Drawing No. M8.

When poor soil conditions are encountered which could create an excessively large foundation design, consideration may be given to allowing an exemption to the maximum capacity design. The contractor must gain approval from the engineer before reducing a foundation's capacity. On projects where poor soil is known to be present, it is advisable that the contractor consider getting foundations approved before releasing poles for fabrication.

Have the contractor notify the engineer if the proposed foundation is to be installed on a slope other than 8H: 1V or flatter.

A. Description:

Furnish and install foundations for NCDOT metal poles with all necessary hardware in accordance with the plans and specifications.

Metal Pole Standards have been developed and implemented by NCDOT for use at signalized intersections in North Carolina. If the plans call for a standard pole, then a standard foundation may be selected from the plans. However, the Contractor is not required to use a standard foundation. If the Contractor chooses to design a non-standard site-specific foundation for a standard pole or if the plans call for a non-standard site-specific pole, design the foundation to conform to the applicable provisions in the NCDOT Metal Pole Standard Drawings and Section B7 (Non-Standard Foundation Design) below. If non-standard site specific foundations are designed for standard QPL approved strain poles, the foundation designer must use the design moment specified by load case on Metal Pole Standard Drawing Sheet M8. Failure to conform to this requirement will be grounds for rejection of the design.

If the Contractor chooses to design a non-standard foundation for a standard pole and the soil test results indicate a standard foundation is feasible for the site, the Contractor will be paid the cost of the standard foundation (drilled pier and wing wall, if applicable). Any additional costs associated with a non-standard site-specific foundation including additional materials, labor and equipment will be considered incidental to the cost of the standard foundation. All costs for the non-standard foundation design will also be considered incidental to the cost of the standard foundation.

B. Soil Test and Foundation Determination:

1. General:

Drilled piers are reinforced concrete sections, cast-in-place against in situ, undisturbed material. Drilled piers are of straight shaft type and vertical.

Some standard drilled piers for supporting poles with mast arms may require wing walls to resist torsional rotation. Based upon this provision and the results of the required soil test, a drilled pier length and wing wall requirement may be determined and constructed in accordance with the plans.

For non-standard site-specific poles, the contractor-selected pole fabricator will determine if the addition of wing walls is necessary for the supporting foundations.

2. Soil Test:

Perform a soil test at each proposed metal pole location. Complete all required fill placement and excavation at each signal pole location to finished grade before drilling each boring. Soil tests performed that are not in compliance with this requirement may be rejected and will not be paid. Drill one boring to a depth of 26 feet within a 25 foot radius of each proposed foundation.

Perform standard penetration tests (SPT) in accordance with ASTM D 1586 at depths of 1, 2.5, 5, 7.5, 10, 15, 20 and 26 feet. Discontinue the boring if one of the following occurs:

- A total of 100 blows have been applied in any 2 consecutive 6-in. intervals.
- A total of 50 blows have been applied with < 3-in. penetration.

Describe each intersection as the "Intersection of *(Route or SR #)*, *(Street Name)* and *(Route or SR #)*, *(Street Name)*, _____ County, Signal Inventory No. _____". Label borings with "B- *N, S, E, W, NE, NW, SE or SW*" corresponding to the quadrant location within the intersection. Pole numbers should be made available to the Drill Contractor. Include pole numbers in the boring label if they are available. If they are not available, ensure the boring labels can be cross-referenced to corresponding pole numbers. For each boring, submit a legible (hand written or typed) boring log signed and sealed by a licensed Geologist or Professional Engineer registered in North Carolina. Include on each boring the SPT blow counts and N-values at each depth, depth of the boring, hammer efficiency, depth of water table and a general description of the soil types encountered using the AASHTO Classification System.

3. Standard Foundation Determination:

Use the following method for determining the Design N-value:

$$N_{AVG} = \frac{(N@1' + N@2.5' + \ldots\ldots\ldots N@\text{Deepest Boring Depth})}{\text{Total Number of N-values}}$$

$$Y = (N@1')^2 + (N@2.5')^2 + \ldots\ldots\ldots (N@\text{Deepest Boring Depth})^2$$

$$Z = (N@1' + N@2.5' + \ldots\ldots\ldots N@\text{Deepest Boring Depth})$$

$$N_{STD\ DEV} = \left(\frac{(\text{Total Number of N-values} \times Y) - Z^2}{(\text{Total Number of N-values}) \times (\text{Total Number of N-values} - 1)} \right)^{0.5}$$

Design N-value equals lesser of the following two conditions:

$N_{AVG} - (N_{STD\ DEV} \times 0.45)$

Or

$$\text{Average of First Four N-Values} = \frac{(N@1' + N@2.5' + N@5' + N@7.5')}{4}$$

Note: If less than 4 N-values are obtained because of criteria listed in Section 2 above, use average of N-values collected for second condition. Do not include the N-value at the deepest boring depth for above calculations if the boring is discontinued at or before the required boring depth because of criteria listed in Section 2 above. Use N-value of zero for weight of hammer or weight of rod. If N-value is greater than 50, reduce N-value to 50 for calculations.

If standard NCDOT strain poles are shown on the plans and the Contractor chooses to use standard foundations, determine a drilled pier length, "L," for each signal pole from the Standard Foundations Chart (sheet M 8) based on the Design N-value and the predominant soil type. For each standard pole location, submit a completed "Metal Pole Standard Foundation Selection Form" signed by the Contractor's representative. Signature on form is for verification purposes only. Include the Design N-value calculation and resulting drilled pier length, "L," on each form.

If non-standard site-specific poles are shown on the plans, submit completed boring logs collected in accordance with Section 2 (Soil Test) above along with pole loading diagrams from the plans to the contractor-selected pole fabricator to assist in the pole and foundation design.

If one of the following occurs, the Standard Foundations Chart shown on the plans may not be used and a non-standard foundation may be required. In such case, contact the Engineer.

- The Design N-value is less than 4.
- The drilled pier length, "L", determined from the Standard Foundations Chart, is greater than the depth of the corresponding boring.

In the case where a standard foundation cannot be used, the Department will be responsible for the additional cost of the non-standard foundation.

Foundation designs are based on level ground around the traffic signal pole. If the slope around the edge of the drilled pier is steeper than 8:1 (H:V) or the proposed foundation will be less than 10 feet from the top of an embankment slope, the Contractor is responsible for providing slope information to the foundation designer and to the Engineer so it can be considered in the design.

The "Metal Pole Standard Foundation Selection Form" may be found at:

http://www.ncdot.gov/doh/preconstruct/highway/geotech/formdet/misc/MetalPole.pdf

If assistance is needed, contact the Engineer.

4. Non-Standard Foundation Design:

Design non-standard foundations based upon site-specific soil test information collected in accordance with Section 2 (Soil Test) above. Design drilled piers for side resistance only in accordance with Section 4.6 of the *AASHTO Standard Specifications for Highway Bridges*. Use the computer software LPILE version-6.0 or later manufactured by Ensoft, Inc. to analyze drilled piers. Use the computer software gINT V8i or later manufactured by Bentley Systems, Inc. with the current NCDOT gINT library and data template to produce SPT boring logs. Provide a drilled pier foundation for each pole with a length and diameter that result in a horizontal lateral movement of less than 1 inch at the top of the pier and a horizontal rotational movement of less than 1 inch at the edge of the pier. Contact the Engineer for pole loading diagrams for standard poles to be used for non-standard foundation designs. Submit any non-standard foundation designs including drawings, calculations, and soil boring logs to the Engineer for review and approval before construction.

C. Drilled Pier Construction:

Construct drilled pier foundations in accordance with the *Foundations and Anchor Rod Assemblies for Metal Poles* provision.

3.4. CUSTOM DESIGN OF TRAFFIC SIGNAL SUPPORTS

A. General:

Design traffic signal supports with foundations consisting of metal strain poles or metal poles with mast arms.

The lengths of the metal signal poles shown on the plans are estimated from available data for bid purposes. Determine the actual length of each pole from field measurements and adjusted cross-sections. Furnish the revised pole heights to the Engineer. Use all other dimensional requirements shown on the plans.

Ensure each pole includes an identification tag with information and location positions as defined on Metal Pole Standard Drawing Sheets M2, M3 and M4. All pole shaft tags must include the NCDOT Inventory number followed by the pole number shown on the traffic signal or ITS (non-signalized locations) plan.

Design all traffic signal support structures using the following 6th Edition AASHTO specifications:

- Design for a 50 year service life as recommended by Table 3.8.3-2.
- Use the wind pressure map developed from 3-second gust speeds, as provided in Article 3.8.
- Ensure signal support structures include natural wind gust loading and truck-induced gust loading in the fatigue design, as provided for in Articles 11.7.1.2 and 11.7.1.3, respectively. Designs need not consider periodic galloping forces.
- Assume the natural wind gust speed in North Carolina is 11.2 mph. For natural wind fatigue stress calculations, utilize a drag coefficient (C_d) computed for 11.2 mph wind velocity and not the basic wind speed velocity.
- Design for Category II fatigue, as provided for in Article 11.6, unless otherwise specified.
- Calculate all stresses using applicable equations from Section 5. The Maximum allowable stress ratios for all signal support designs are 0.9.
- Conform to article 10.4.2 and 11.8 for all deflection requirements.

Ensure that the design permits cables to be installed inside poles and mast arms.

Unless otherwise specified by special loading criteria, the computed surface area for ice load on signal heads is:

- 3-section, 12-inch, Surface area: 26.0 ft^2 (17.0 ft^2 without back plate)
- 4-section, 12-inch, Surface area: 32.0 ft^2 (21.0 ft^2 without back plate)
- 5-section, 12-inch, Surface area: 42.0 ft^2 (29.0 ft^2 without back plate)

The ice loading for signal heads defined above includes the additional surface area that back plates will induce. Special loading criteria may be specified in instances where back plates will not be installed on signal heads. Refer to the Loading Schedule on each Metal Pole Loading Diagram for revised signal head surface areas. The pole designer should revise ice loads accordingly in this instance. Careful examination of the plans when this is specified is important as this may impact sizing of the metal support structure and foundation design which could affect proposed bid quotes. All maximum stress ratios of 0.9 still apply.

Assume the combined minimum weight of a messenger cable bundle (including messenger cable, signal cable and detector lead-in cables) is 1.3 lbs/ft. Assume the combined minimum diameter of this cable bundle is 1.3 inches.

Ensure that designs provide a removable pole cap with stainless steel attachment screws for each pole top and mast arm end.

B. Metal Poles:

Submit design drawings for approval including pre-approved QPL pole drawings. Show all the necessary details and calculations for the metal poles including the foundation and connections. Include NCDOT inventory number on design drawings. Include as part of the design calculations the ASTM specification numbers for the materials to be used. Provide the types and sizes of welds on the design drawings. Include a Bill of Materials on design drawings. Ensure design drawings and calculations are signed, dated, and sealed by the responsible professional engineer licensed in the state of North Carolina. Immediately bring to the attention of the Engineer any structural deficiency that becomes apparent in any assembly or member of any assembly as a result of the design requirements imposed by these specifications, the plans, or the typical drawings. Said Professional Engineer is wholly responsible for the design of all poles and arms. Review and acceptance of these designs by the Department does not relieve the said Professional Engineer of his responsibility. **Do not fabricate the assemblies until receipt of the Department's approval of the design drawings.**

For mast arm poles, provide designs with provisions for pole plates and associated gussets and fittings for mast arm attachment. As part of each mast arm attachment, provide a grommeted 2" diameter hole on the shaft side of the connection to allow passage of the signal cables from the pole to the arm.

Where ice is present, assume wind loads as shown in Figure 3.9.4.2-3 of the 6th Edition AASHTO Specification for Group III loading.

For each strain pole, provide two messenger cable clamps and associated hardware to attach the messenger support cable. Ensure that the diameter of the clamps is appropriately designed to be adjustable from 1'-6" inches below the top, down to 6'-6" below the top of the pole. Do not attach more than one messenger support cable to a messenger cable clamp.

Provide a grounding lug(s) in the approximate vicinity of the messenger cable clamp for bonding and grounding messenger cable. Lugs must accept #4 or #6 AWG wire to bond messenger cables to the pole in order to provide an effective ground fault circuit path. Refer to Metal Pole Standard Drawing Sheet M6 for construction details.

Design tapers for all pole shafts that begin at the base with diameters that decrease uniformly at the rate of 0.14 inch per foot of length.

Design a base plate on each pole. The minimum base plate thickness for all poles is determined by the following criteria:

Case 1 Circular or rectangular solid base plate with the upright pole welded to the top surface of base plate with full penetration butt weld, and where no stiffeners are provided. A base plate with a small center hole, which is less than 1/3 of the upright diameter, and located concentrically with the upright pole, may be considered as a solid base plate.

The magnitude of bending moment in the base plate, induced by the anchoring force of each anchor bolt is $M = (P \times D_1) / 2$, where

M = bending moment at the critical section of the base plate induced by one anchor bolt

P = anchoring force of each anchor bolt

D_1 = horizontal distance between the anchor bolt center and the outer face of the upright, or the difference between the bolt circle radius and the outside radius of the upright

Locate the critical section at the face of the anchor bolt and perpendicular to the bolt circle radius. The overlapped part of two adjacent critical sections is considered ineffective.

Case 2 Circular or rectangular base plate with the upright pole socketed into and attached to the base plate with two lines of fillet weld, and where no stiffeners are provided, or any base plate with a center hole that is larger in diameter than 1/3 of the upright diameter.

The magnitude of bending moment induced by the anchoring force of each anchor bolt is $M = P \times D_2$,

where P = anchoring force of each anchor bolt

D_2 = horizontal distance between the face of the upright and the face of the anchor bolt nut

Locate the critical section at the face of the anchor bolt top nut and perpendicular to the radius of the bolt circle. The overlapped part of two adjacent critical sections is considered ineffective.

If the base plate thickness calculated for Case 2 is less than Case 1, use the thickness calculated for Case 1.

The following additional owner requirements apply concerning pole base plates.

- Ensure that whichever case governs as defined above, the anchor bolt diameter is set to match the base plate thickness. If the minimum diameter required for the anchor bolt exceeds the thickness required for the base plate, set the base plate thickness equal to the required bolt diameter.
- For dual mast arm supports, or for single mast arm supports 50’ or greater, use a minimum 8 bolt orientation with 2” diameter anchor bolts, and a 2” thick base plate.
- For all metal poles with mast arms, use a full penetration groove weld with a backing ring to connect the pole upright component to the base. Refer to Metal Pole Standard Drawing Sheet M4.

Ensure that designs have anchor bolt holes with a diameter 1/4 inch larger than the anchor bolt diameters in the base plate.

Ensure that the anchor bolts have the required diameters, lengths, and positions, and will develop strengths comparable to their respective poles.

Provide designs with a 6 x 12-inch hand hole with a reinforcing frame for each pole.

Provide designs with a terminal compartment with cover and screws in each pole that encompasses the hand hole and contains provisions for a 12-terminal barrier type terminal block.

For each pole, provide designs with provisions for a 1/2 inch minimum thread diameter, coarse thread stud and nut for grounding which will accommodate a #6 AWG ground wire. Ensure the lug is electrically bonded to the pole and is conveniently located inside the pole at the hand hole.

When required, design couplings on the pole for mounting pedestrian pushbuttons at a height of 42 inches above the bottom of the base. Provide mounting points consisting of 1-1/2 inch internally threaded half-couplings that comply with the NEC that are mounted within the poles. Ensure the couplings are essentially flush with the outside surfaces of the poles and are installed before any required galvanizing. Provide a threaded plug for each half coupling. Ensure that the surface of the plug is essentially flush with the outer end of the mounting point when installed and has a recessed hole to accommodate a standard wrench.

3.5. POLE NUMBERING SYSTEM

A. New Poles

Attach an identification tag to each pole shaft and mast arm section as shown on Metal Pole Standard Drawing Sheet M2 “Typical Fabrication Details Common To All Metal Poles”.

3.6. MEASUREMENT AND PAYMENT

Actual number of metal strain signal poles (without regard to height or load capacity) furnished, installed and accepted.

Actual number of soil tests with SPT borings drilled furnished and accepted.

Actual volume of concrete poured in cubic yards of drilled pier foundation furnished, installed and accepted.

No measurement will be made for foundation designs prepared with metal pole designs, as these will be considered incidental to designing signal support structures.

Payment will be made under:

Metal Strain Signal Pole .....Each
Soil Test .....Each
Drilled Pier Foundation..... Cubic Yard

4. PROTECTIVE COATING FOR METAL POLES

4.1. Description

Protective coating for metal poles is a supplemental durable color coating that is applied to galvanized steel and aluminum traffic signal structures installed in locations where maintaining an aesthetic appearance is important. Powder Coating is the preferred supplemental protective coating process for coating galvanized steel and aluminum structures. However, for the purposes of this special provision, an Acrylic Primer and top coat paint system is included as an acceptable alternative when protective color coating is required.

Provide protective coating over galvanization for all steel poles including all necessary hardware in accordance with the plans and specifications. Any aluminum components do not need to be galvanized before application of protective coating.

4.2. Materials

With the exception of aluminum components, furnish all metal poles with galvanic protection along with a tough and durable application of protective coating. Aluminum components shall have a durable powder coating application. Galvanization is not required for aluminum components.

Furnish pole caps that have a low gloss powder finish applied over a hot-dipped galvanized surface. Comply with the applicable provisions of Section 442-10 and 442-12 of the *Standard Specifications*.

Ensure the selected color for protective coating has been verified and approved by the Engineer prior to fabrication.

4.3. Coating Shop Approval

Approve the coating shop facility prior to the application of any coating process. Submit all requests, procedures and documents electronically to:

- Mr. Brian Hunter, P.E., Chemical Testing Engineer
- bhunter@ncdot.gov

A) Submit a quality control procedure that the company has established to ensure a quality and durable coating. The quality control procedure shall contain at a minimum the following:

- Qualified / Certified personnel to manage the QC Program and to conduct Quality Control tests
- Qualified / certified coaters
- Source and type of powder
- How the powder will be stored
- Powder application facility (heated or unheated)
- Surface pre-treatment
- Surface preparation including profile
- Application methods
- Curing conditions (conventional or infrared)
- Curing Temperature
- Adhesion & Holiday Detection
- Repair Procedure
- Storage and protection of coated items
- Shipping and handling (packing, protection, and wrapping)

B) Submit a powder certification from the manufacturer

C) Submit the following to the Chemical Testing Engineer a minimum of four weeks prior to coating application.

1. Two test panels of ASTM A36 steel, ¼ or greater in thickness measuring 8 inches by 11 inches using the proposed color of the final coat; a powder coated over galvanized test panel and a powder coated over un-galvanized test panel.
2. In addition, provide two (2) samples of the same or comparable material and thickness as production pieces. Ensure production piece replicas do not exceed twelve inches (12”) in length and width nor 50 pounds in weight.
3. Submit all test panels with inspection reports and records according to *Standard Specifications*, Section 442, Section 1072, Section 1076, and Section 1080.

4. Acceptance of the panels is determined by meeting the requirements of ASTM D-4541 of 800 psi for both galvanized and un-galvanized and production piece test panels.
5. Send all panels to :

   Materials and Tests Unit
   1801 Blue Ridge Road
   Raleigh, NC 27607
   Attn: Chemical Testing Engineer

4.4. POWDER COATING

A. Galvanizing

Galvanize steel products in accordance with Section 1076 of the *Standard Specifications*. Ensure the fabricator or designated representative(s) that is supplying the components to be galvanized communicates with the galvanizer to indicate that the galvanized pieces will be powder coated to avoid water or chromate quenching.

B. Surface Preparation

Comply with manufacturer's recommended surface coating specifications, Steel Structure Painting Council (SSPC) specifications and applicable articles of Section 442 (Painting Steel Structures) of the *Standard Specifications*. Ensure that surface preparations and treatments are performed and meet the requirements of the above referenced specifications.

Some pole components, specifically steel plates ¾ inches or more in thickness, may need blast cleaning prior to structure assembly to remove impurities and non-metallic foreign materials. Mechanically remove all weld flux after structure is assembled

Degrease and prepare steel structure for zinc coating after assembly using full immersion baths and pickling processes in heat controlled caustic and acid solutions. Rinse and clean structure to remove caustic or acid solutions by immersion in a circulating fresh water bath. Immerse structure in a heat controlled concentrated zinc ammonium chloride flux solution and air dry as a final prep before hot-dip galvanization.

Ensure that the surface preparation is no less than specified by the powder manufacturer's recommendations. Prepare all components to be coated in accordance with SSPC SP-2 (Hand Tool Cleaning) and/or SSPC SP-3 (Power Tool Cleaning). Remove all drainage spikes, high spots, protrusions or other surface defects using hand or power tools. Do not remove the galvanization below the limits set forth in AASHTO M111.

Remove grease, oils, moisture, scale, rust or any other foreign matter prior to powder coating to ensure ideal adhesion and coating performance. Prepare and coat the galvanized surface as soon as possible after the galvanization process.

C. Powder Coating Application and Curing

Prepare galvanized finish for powder coating by brush blasting in accordance with SSPC-SP7. Ensure all threaded components of the structure are protected from damage during blasting process.

Use thermosetting powder resin that meets 5A or 5B classifications of ASTM D3359. Apply powder coating electrostatically. Follow manufacturer's recommended preheating requirements. Ensure the top coat finish is applied uniformly to all surfaces with a dry film thickness of between 3.0 to 5.0 mils. Cure the top coat by heating the structure to manufacturer recommended temperatures at the duration required to ensure complete and uniform bond.

D. Quality Control

Ensure the applicator provides all test reports and documentation and inspects all coated material as outlined in the *Standard Specifications*, Section 442, Section 1072, Section 1076, and Section 1080. Ensure the quality control inspection is kept separate from the production functions.

E. Storage, Shipping, and Handling

Store all powder coated material inside or as directed by the Engineer.

Protect the product from incurring damage during all shipping, handling, and storing activities. Do not store the product directly on the ground or in areas where water may pool; the Engineer determines the effectiveness of all storage, shipping and handling methods.

F. Repair of Powder Coated Material

Repair all damage to the coating by the original method of application as outlined in the coating facility's repair procedure. Ensure all repair areas meet the original requirements for adhesion as stated in this Project Special Provision.

Photograph, document, and report all damages upon delivery to the project site prior to unloading. Provide documented damage notifications to the Engineer or to their authorized representative so the application firm can be notified. The Engineer has the authority to accept or reject the material as outlined in the *Standard Specifications*.

Submit to the Engineer a repair procedure for damaged coatings which occur during storage, transporting, handling and or installation. Utilize a liquid paint approved by the Department, compatible with the powder applied product. Ensure all repair areas demonstrate an adhesion rating of 400 psi in accordance with ASTM D-4541. Obtain Engineer's acceptance of the final finish.

4.5.ACRYLIC PRIMER AND TOP COAT PAINT SYSTEM 4 (MODIFIED)

A. Description

Follow NCDOT procedures for Powder Coating over Galvanizing. Provide an Acrylic Primer and top coat when a substitute for powder coating is necessary.

Provide supplemental coating for all mast arms with metal signal poles and all necessary hardware for the signalized intersection in accordance with NCDOT Standard specifications – sections 442 and 1080, as contained herein, and as shown on the plans.

Ensure all painting work for new structures, except field touch-up and bolt painting is performed in the shop.

B. Surface Preparation

Ensure all surface preparation is not less than that specified by the paint manufacturer's recommendations.

Ensure all components to be coated are prepared in accordance with SSPC SP2 (Hand Tool Cleaning and or SSPC SP-3 (Power Tool Cleaning). Remove all drainage spikes, high spots, protrusions or other surface defects using hand or power tools. Do not remove the galvanization below the limits set forth in AASHTO M111.

Perform abrasive sweep blasting in accordance with ASTM D6386. Refer to this section for a description of the abrasive blast material to be used. Use a material and technique capable of stripping action to remove corrosion products and to provide a rough surface profile while leaving base zinc layers intact.

Blow down all blasted surfaces with clean compressed air to provide a clean, dry surface.

Ensure all surfaces are free of visible zinc oxides or zinc hydroxides.

C. Materials

Use an approved/qualified waterborne paint meeting the requirements of NCDOT Standard specification section 1080. Do not apply paint until each batch has been tested by the Department. Provide color as specified in the contract documents.

Ensure all paint used on this contract is produced by the same manufacturer.

D. Painting

Apply paint in accordance with the requirements of Section 1080 and Section 442 of the 2010 *Standard Specifications* using System 4 as modified herein.

System 4 (Modified)
Acrylic Primer and Top Coats

Coat	Material	Mils Dry/Wet Film Thickness	Mils Dry/Wet Film Thickness
		Minimum	Maximum
Primer	1080-12 White	3.0 DFT	5.0 DFT
Stripe	1080-12 Brown	4.0 WFT	7.0 WFT
Topcoat	1080-12 Brown	2.0 DFT	4.0 DFT
Total		5.0 DFT	9.0 DFT

Shop paint all galvanized surfaces within 8 hours after surface preparation with the exception of field touch-up and bolt painting.

Mask off and do not paint all data plates and faying surfaces prior to application.

Spray apply all coatings except for the stripe coat. Brush apply the stripe coat to all plate edges, welds, bolt holes and bolts prior to applying the finish coat.

E. Curing

Store all material in a heated shop for a period no less than 24 hours once top coat has been applied. Continue storing material until requirements of ASTM D-1640 have been met.

F. Inspection

Provide inspection records showing the initial average thickness of the hot dipped galvanizing as well as the final average DFT measurement.

Ensure all material is of a uniform appearance free of runs, drips, and sags.

G. Handling

Do not handle, ship, or erect coated members until paint is thoroughly dry.

Protect all shipping and handling either from the coating facility to project site and or storage site to area(s) to construction location from incurring damage to product. Wood blocks and nylon slings are recommended for securing, loading, hoisting or storing members.

H. Repair of Damaged Coating

Repair damage occurring to the galvanized portion of the coating during shipment or installation in accordance with Articles 1076-6 and 1080-9 of the *Standard Specifications*. Repair damage occurring to the painted portion of the coating during shipment or installation by applying 4.0-7.0 wet mils of topcoat with a brush or roller and feather or taper this to be level with the surrounding areas.

4.6. MEASUREMENT AND PAYMENT

Actual number of strain poles with protective coating applied furnished, installed, and accepted.

Actual number of signal pedestals with powder coat applied furnished, installed, and accepted.

Payment will be made under:

Powder Coat for Strain Pole (_____).....Each
Powder Coat for Signal Pedestal (_____).....Each

5. CONTROLLERS WITH CABINETS

5.1. MATERIALS – TYPE 2070L CONTROLLERS

Conform to CALTRANS *Transportation Electrical Equipment Specifications* (TEES) (dated August 16, 2002, plus Errata 1 dated October 27, 2003 and Errata 2 dated June 08, 2004) except as required herein.

Furnish Model 2070L controllers. Ensure that removal of the CPU module from the controller will place the intersection into flash.

The Department will provide software at the beginning of the burning-in period. Contractor shall give 5 working days notice before needing software. Program software provided by the Department.

Provide model 2070L controllers with the latest version of OS9 operating software and device drivers, composed of the unit chassis and at a minimum the following modules and assemblies:

- MODEL 2070 1B, CPU Module, Single Board
- MODEL 2070-2A, Field I/O Module (FI/O)
  - Note: Configure the Field I/O Module to disable both the External WDT Shunt/Toggle Switch and SP3 (SP3 active indicator is "off")
- MODEL 2070-3B, Front Panel Module (FP), Display B (8x40)
- MODEL 2070-4A, Power Supply Module, 10 AMP
- MODEL 2070-7A, Async Serial Com Module (9-pin RS-232)

Furnish one additional MODEL 2070-7A, Async Serial Com Module (9-pin RS-232) for all master controller locations.

For each master location and central control center, furnish a U.S. Robotics V.92 or approved equivalent auto-dial/auto-answer external modem to accomplish the interface to the Department-furnished microcomputers. Include all necessary hardware to ensure telecommunications.

5.2.MATERIALS – GENERAL CABINETS

Provide a moisture resistant coating on all circuit boards.

Provide one 20 mm diameter radial lead UL-recognized metal oxide varistor (MOV) between each load switch field terminal and equipment ground. Electrical performance is outlined below.

PROPERTIES OF MOV SURGE PROTECTOR	
Maximum Continuous Applied Voltage at 185° F	150 VAC (RMS) 200 VDC
Maximum Peak 8x20µs Current at 185° F	6500 A
Maximum Energy Rating at 185° F	80 J
Voltage Range 1 mA DC Test at 77° F	212-268 V
Max. Clamping Voltage 8x20µs, 100A at 77° F	395 V
Typical Capacitance (1 MHz) at 77° F	1600 pF

Provide a power line surge protector that is a two-stage device that will allow connection of the radio frequency interference filter between the stages of the device. Ensure that a maximum continuous current is at least 10A at 120V. Ensure that the device can withstand a minimum of 20 peak surge current occurrences at 20,000A for an 8x20 microsecond waveform. Provide a maximum

clamp voltage of 395V at 20,000A with a nominal series inductance of 200μh. Ensure that the voltage does not exceed 395V. Provide devices that comply with the following:

Frequency (Hz)	Minimum Insertion Loss (dB)
60	0
10,000	30
50,000	55
100,000	50
500,000	50
2,000,000	60
5,000,000	40
10,000,000	20
20,000,000	25

5.3. MATERIALS – TYPE 170E CABINETS

A. Type 170 E Cabinets General:

Conform to the city of Los Angeles' Specification No. 54-053-08, *Traffic Signal Cabinet Assembly Specification* (dated July 2008), except as required herein.

Furnish model 336S pole mounted cabinets configured for 8 vehicle phases, 4 pedestrian phases, and 6 overlaps. Do not reassign load switches to accommodate overlaps unless shown on electrical details. Provide 336S pole mounted cabinets that are 46" high with 40" high internal rack assemblies.

Furnish model 332 base mounted cabinets configured for 8 vehicle phases, 4 pedestrian phases, and 6 overlaps. When overlaps are required, provide auxiliary output files for the overlaps. Do not reassign load switches to accommodate overlaps unless shown on electrical details.

Provide model 200 load switches, model 222 loop detector sensors, model 252 AC isolators, and model 242 DC isolators according to the electrical details. As a minimum, provide one (1) model 2018 conflict monitor, one (1) model 206L power supply unit, two (2) model 204 flashers, one (1) DC isolator (located in slot I14), and four (4) model 430 flash transfer relays (provide seven (7) model 430 flash transfer relays if auxiliary output file is installed) with each cabinet.

B. Type 170 E Cabinet Electrical Requirements:

Provide a cabinet assembly designed to ensure that upon leaving any cabinet switch or conflict monitor initiated flashing operation, the controller starts up in the programmed start up phases and start up interval.

Furnish two sets of non-fading cabinet wiring diagrams and schematics in a paper envelope or container and placed in the cabinet drawer.

All AC+ power is subject to radio frequency signal suppression.

Provide surge suppression in the cabinet for each type of cabinet device. Provide surge protection for the full capacity of the cabinet input file. Provide surge suppression devices that operate properly over a temperature range of -40º F to +185º F. Ensure the surge suppression devices provide both common and differential modes of protection.

Provide a pluggable power line surge protector that is installed on the back of the PDA (power distribution assembly) chassis to filter and absorb power line noise and switching transients. Ensure the device incorporates LEDs for failure indication and provides a dry relay contact closure for the purpose of remote sensing. Ensure the device meets the following specifications:

Peak Surge Current (Single pulse, 8x20µs)……..20,000A

Occurrences (8x20µs waveform)……..10 minimum @ 20,000A

Maximum Clamp Voltage…….395VAC

Operating Current……..15 amps

Response Time……..< 5 nanoseconds

Provide a loop surge suppressor for each set of loop terminals in the cabinet. Ensure the device meets the following specifications:

Peak Surge Current (6 times, 8x20µs)

(Differential Mode)…….400A

(Common Mode)……1,000A

Occurrences (8x20µs waveform)……..500 min @ 200A

Maximum Clamp Voltage

(Differential Mode @400A)……35V

(Common Mode @1,000A)…….35V

Response Time……..< 5 nanoseconds

Maximum Capacitance……..35 pF

Provide a data communications surge suppressor for each communications line entering or leaving the cabinet. Ensure the device meets the following specifications:

Peak Surge Current (Single pulse, 8x20µs)……..10,000A

Occurrences (8x20µs waveform)……..100 min @ 2,000A

Maximum Clamp Voltage…….Rated for equipment protected

Response Time……..< 1 nanosecond

Maximum Capacitance…….1,500 pF

Maximum Series Resistance…….15Ω

Provide a DC signal surge suppressor for each DC input channel in the cabinet. Ensure the device meets the following specifications:

Peak Surge Current (Single pulse, 8x20µs)……..10,000A

Occurrences (8x20µs waveform)……..100 @ 2,000A

Maximum Clamp Voltage…….30V

Response Time……..< 1 nanosecond

Provide a 120 VAC signal surge suppressor for each AC+ interconnect signal input. Ensure the device meets the following specifications:

Peak Surge Current (Single pulse, 8x20µs)……..20,000A

Maximum Clamp Voltage…….350VAC

Response Time……..< 200 nanoseconds

Discharge Voltage……<200 Volts @ 1,000A

Insulation Resistance……≥100 MΩ

Provide conductors for surge protection wiring that are of sufficient size (ampacity) to withstand maximum overcurrents which could occur before protective device thresholds are attained and current flow is interrupted.

If additional surge protected power outlets are needed to accommodate fiber transceivers, modems, etc., install a UL listed, industrial, heavy-duty type power outlet strip with a minimum rating of 15 A / 125 VAC, 60 Hz. Provide a strip that has a minimum of 3 grounded outlets. Ensure the power outlet strip plugs into one of the controller unit receptacles located on the rear of the PDA. Ensure power outlet strip is mounted securely; provide strain relief if necessary.

Provide a door switch in the front and a door switch in the rear of the cabinet that will provide the controller unit with a Door Ajar alarm when either the front or the rear door is open. Ensure the door switches apply DC ground to the Input File when either the front door or the rear door is open.

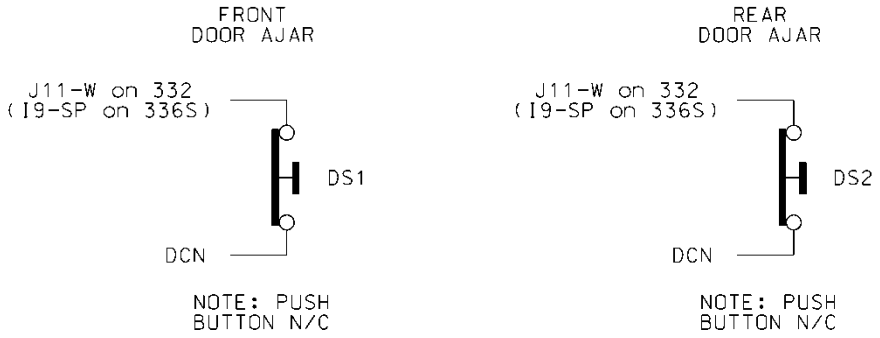

Furnish a fluorescent fixture in the rear across the top of the cabinet and another fluorescent fixture in the front across the top of the cabinet at a minimum. Ensure that the fixtures provide sufficient light to illuminate all terminals, labels, switches, and devices in the cabinet. Conveniently locate the fixtures so as not to interfere with a technician's ability to perform work on any devices or terminals in the cabinet. Provide a protective diffuser to cover exposed bulbs. Install 16 watt T-4 lamps in the fluorescent fixtures. Provide a door switch to provide power to each fixture when the respective door is open. Wire the fluorescent fixtures to the 15 amp ECB (equipment circuit breaker).

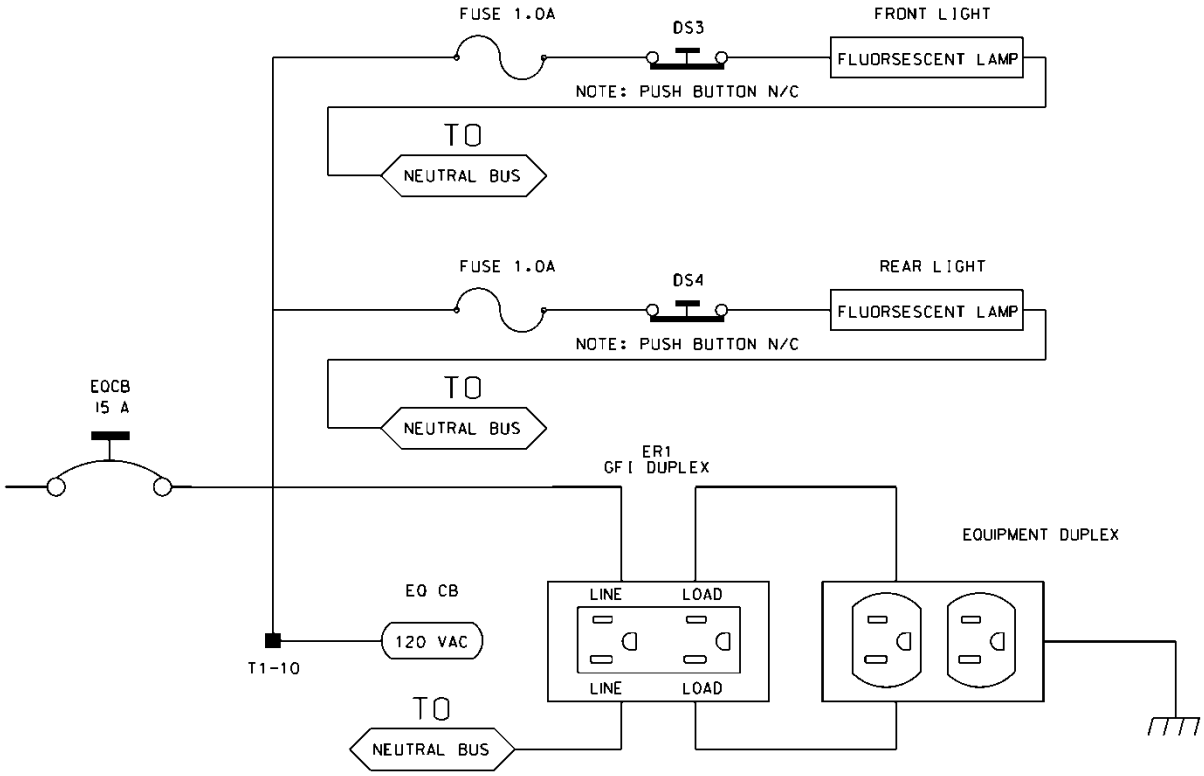

Furnish a police panel with a police panel door. For model 336S cabinets, mount the police panel on the rear door. Ensure that the police panel door permits access to the police panel when the main door is closed. Ensure that no rainwater can enter the cabinet even with the police panel door open. Provide a police panel door hinged on the right side as viewed from the front. Provide a police panel

door lock that is keyed to a standard police/fire call box key. In addition to the requirements of LA Specification No. 54-053-08, provide the police panel with a toggle switch connected to switch the intersection operation between normal stop-and-go operation (AUTO) and manual operation (MANUAL). Ensure that manual control can be implemented using inputs and software such that the controller provides full programmed clearance times for the yellow clearance and red clearance for each phase while under manual control.

Provide a 1/4-inch locking phone jack in the police panel for a hand control to manually control the intersection. Provide sufficient room in the police panel for storage of a hand control and cord.

Ensure the 336S cabinet Input File is wired as follows:

336S Cabinet Port-Bit/C-1 Pin Assignment														
Slot #	1	2	3	4	5	6	7	8	9	10	11	12	13	14
C-1 (Spares)	59	60	61	62	63	64	65	66	75	76	77	78	79	80
Port	3-2	1-1	3-4	1-3	3-1	1-2	3-3	1-4	2-5	5-5	5-6	5-1	5-2	6-7
C-1	56	39	58	41	55	40	57	42	51	71	72	67	68	81
Port	2-1	1-5	2-3	1-7	2-2	1-6	2-4	1-8	2-6	5-7	5-8	5-3	5-4	6-8
C-1	47	43	49	45	48	44	50	46	52	73	74	69	70	82

For model 332 base mounted cabinets, ensure terminals J14-E and J14-K are wired together on the rear of the Input File. Connect TB9-12 (J14 Common) on the Input Panel to T1-2 (AC-) on the rear of the PDA.

Provide detector test switches mounted at the top of the cabinet rack or other convenient location which may be used to place a call on each of eight phases based on the chart below. Provide three positions for each switch: On (place call), Off (normal detector operation), and Momentary On (place momentary call and return to normal detector operation after switch is released). Ensure that the switches are located such that the technician can read the controller display and observe the intersection.

Connect detector test switches for cabinets as follows:

336S Cabinet		332 Cabinet	
Detector Call Switches	**Terminals**	**Detector Call Switches**	**Terminals**
Phase 1	I1-F	Phase 1	I1-W
Phase 2	I2-F	Phase 2	I4-W
Phase 3	I3-F	Phase 3	I5-W
Phase 4	I4-F	Phase 4	I8-W
Phase 5	I5-F	Phase 5	J1-W
Phase 6	I6-F	Phase 6	J4-W
Phase 7	I7-F	Phase 7	J5-W
Phase 8	I8-F	Phase 8	J8-W

Provide the PCB 28/56 connector for the conflict monitor unit (CMU) with 28 independent contacts per side, dual-sided with 0.156 inch contact centers. Provide the PCB 28/56 connector contacts with solder eyelet terminations. Ensure all connections to the PCB 28/56 connector are soldered to the solder eyelet terminations.

Ensure that all cabinets have the CMU connector wired according to the 332 cabinet connector pin assignments (include all wires for auxiliary output file connection). Wire pins 13, 16, R, and U of the CMU connector to a separate 4 pin plug, P1, as shown below. Provide a second plug, P2, which will mate with P1 and is wired to the auxiliary output file as shown below. Provide an additional plug, P3, which will mate with P1 and is wired to the pedestrian yellow circuits as shown below. When no auxiliary output file is installed in the cabinet, provide wires for the green and yellow inputs for channels 11, 12, 17, and 18, the red inputs for channels 17 and 18, and the wires for the P2 plug. Terminate the two-foot wires with ring type lugs, insulated, and bundled for optional use.

	P1		P2		P3	
PIN	**FUNCTION**	**CONN TO**	**FUNCTION**	**CONN TO**	**FUNCTION**	**CONN TO**
1	CH-9G	CMU-13	OLA-GRN	A123	2P-YEL	114
2	CH-9Y	CMU-16	OLA-YEL	A122	4P-YEL	105
3	CH-10G	CMU-R	OLB-GRN	A126	6P-YEL	120
4	CH-10Y	CMU-U	OLB-YEL	A125	8P-YEL	111

Do not provide the P20 terminal assembly (red monitor board) or red interface ribbon cable as specified in LA Specification No. 54-053-08.

Provide a P20 connector that mates with and is compatible with the red interface connector mounted on the front of the conflict monitor. Ensure that the P20 connector and the red interface

connector on the conflict monitor are center polarized to ensure proper connection. Ensure that removal of the P20 connector will cause the conflict monitor to recognize a latching fault condition and place the cabinet into flashing operation.

Wire the P20 connector to the output file and auxiliary output file using 22 AWG stranded wires. Ensure the length of these wires is a minimum of 42 inches in length. Provide a durable braided sleeve around the wires to organize and protect the wires.

Wire the P20 connector to the traffic signal red displays to provide inputs to the conflict monitor as shown below. Ensure the pedestrian Don't Walk circuits are wired to channels 13 through 16 of the P20 connector. When no auxiliary output file is installed in the cabinet, provide wires for channels 9 through 12 reds. Provide a wire for special function 1. Terminate the unused wires with ring type lugs, insulated, and bundled for optional use.

	P20 Connector				
PIN	**FUNCTION**	**CONN TO**	**PIN**	**FUNCTION**	**CONN TO**
1	Channel 15 Red	119	2	Channel 16 Red	110
3	Channel 14 Red	104	4	Chassis GND	01-9
5	Channel 13 Red	113	6	N/C	
7	Channel 12 Red	AUX 101	8	Spec Function 1	
9	Channel 10 Red	AUX 124	10	Channel 11 Red	AUX 114
11	Channel 9 Red	AUX 121	12	Channel 8 Red	107
13	Channel 7 Red	122	14	Channel 6 Red	134
15	Channel 5 Red	131	16	Channel 4 Red	101
17	Channel 3 Red	116	18	Channel 2 Red	128
19	Channel 1 Red	125	20	Red Enable	01-14

Ensure the controller unit outputs to the auxiliary output file are pre-wired to the C5 connector. When no auxiliary output file is installed in the cabinet, connect the C5 connector to a storage socket located on the Input Panel or on the rear of the PDA.

Do not wire pin 12 of the load switch sockets.

In addition to the requirements of LA Specification No. 54-053-08, ensure relay K1 on the Power Distribution Assembly (PDA) is a four pole relay and K2 on the PDA is a two pole relay.

Provide a two pole, ganged circuit breaker for the flash bus circuit. Ensure the flash bus circuit breaker is an inverse time circuit breaker rated for 10 amps at 120 VAC with a minimum of 10,000 RMS symmetrical amperes short circuit current rating. Do not provide the auxiliary switch feature on the flash bus circuit breaker. Ensure the ganged flash bus circuit breaker is certified by the circuit breaker manufacturer to provide gang tripping operation.

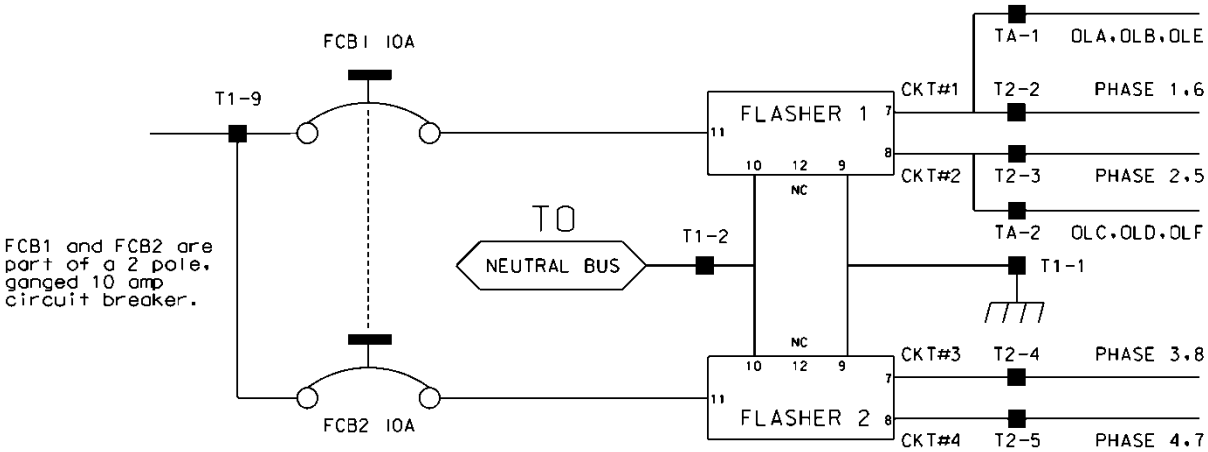

Ensure auxiliary output files are wired as follows:

AUXILIARY OUTPUT FILE TERMINAL BLOCK TA ASSIGNMENTS	
POSITION	**FUNCTION**
1	Flasher Unit #1, Circuit 1/FTR1 (OLA, OLB)/FTR3 (OLE)
2	Flasher Unit #1, Circuit 2/FTR2 (OLC, OLD)/FTR3 (OLF)
3	Flash Transfer Relay Coils
4	AC -
5	Power Circuit 5
6	Power Circuit 5
7	Equipment Ground Bus
8	NC

Provide four spare load resistors mounted in each cabinet. Ensure each load resistor is rated as shown in the table below. Wire one side of each load resistor to AC-. Connect the other side of each resistor to a separate terminal on a four (4) position terminal block. Mount the load resistors and terminal block either inside the back of Output File No. 1 or on the upper area of the Service Panel.

ACCEPTABLE LOAD RESISTOR VALUES	
VALUE (ohms)	**WATTAGE**
1.5K – 1.9 K	25W (min)
2.0K – 3.0K	10W (min)

Provide Model 200 load switches, Model 204 flashers, Model 242 DC isolators, Model 252 AC isolators, and Model 206L power supply units that conform to CALTRANS' "*Transportation Electrical Equipment Specifications*" dated March 12, 2009 with Erratum 1.

C. Type 170 E Cabinet Physical Requirements:

Do not mold, cast, or scribe the name "City of Los Angeles" on the outside of the cabinet door as specified in LA Specification No. 54-053-08. Do not provide a Communications Terminal Panel as specified in LA Specification No. 54-053-08. Do not provide terminal block TBB on the Service Panel. Do not provide Cabinet Verification Test Program software or associated test jigs as specified in LA Specification No. 54-053-08.

Furnish unpainted, natural, aluminum cabinet shells. Ensure that all non-aluminum hardware on the cabinet is stainless steel or a Department approved non-corrosive alternate.

Ensure the lifting eyes, gasket channels, police panel, and all supports welded to the enclosure and doors are fabricated from 0.125 inch minimum thickness aluminum sheet and meet the same standards as the cabinet and doors.

Provide front and rear doors with latching handles that allow padlocking in the closed position. Furnish 0.75 inch minimum diameter stainless steel handles with a minimum 0.5 inch shank. Place the padlocking attachment at 4.0 inches from the handle shank center to clear the lock and key. Provide an additional 4.0 inches minimum gripping length.

Provide Corbin #2 locks on the front and rear doors. Provide one (1) Corbin #2 and one (1) police master key with each cabinet. Ensure main door locks allow removal of keys in the locked position only.

Provide a surge protection panel with 16 loop surge protection devices and designed to allow sufficient free space for wire connection/disconnection and surge protection device replacement. For model 332 cabinets, provide an additional 20 loop surge protection devices. Provide an additional two AC+ interconnect surge devices to protect one slot and eight DC surge protection devices to protect four slots. Provide no protection devices on slot I14.

For pole mounted cabinets, mount surge protection devices for the AC+ interconnect inputs, inductive loop detector inputs, and low voltage DC inputs on a swing down panel assembly fabricated from sturdy aluminum. Attach the swing down panel to the bottom rear cabinet rack assembly using thumb screws. Ensure the swing down panel allows for easy removal of the input file without removing the surge protection panel assembly or its parts. Have the surge protection devices mounted horizontally on the panel and soldered to the feed through terminals of four 14 position terminal blocks with #8 screws mounted on the other side. Ensure the top row of terminals is connected to the upper slots and the bottom row of terminals is connected to the bottom slots. Provide a 15 position copper equipment ground bus attached to the field terminal side (outside) of

the swing down panel for termination of loop lead-in shield grounds. Ensure that a Number 4 AWG green wire connects the surge protection panel assembly ground bus to the main cabinet equipment ground.

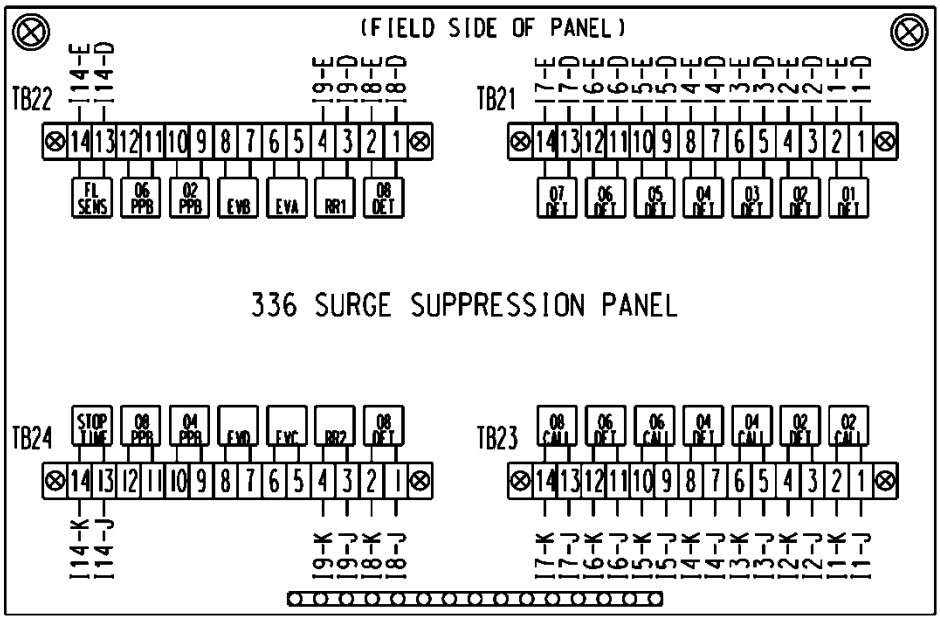

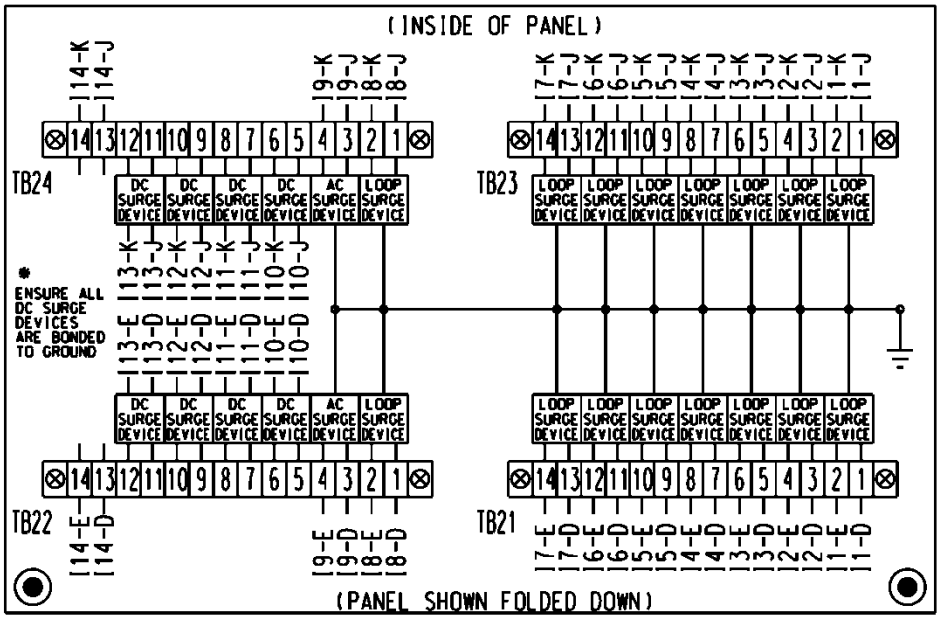

For base mounted cabinets, mount surge protection panels on the left side of the cabinet as viewed from the rear. Attach each panel to the cabinet rack assembly using bolts and make it easily removable. Mount the surge protection devices in vertical rows on each panel and connect the

devices to one side of 12 position, double row terminal blocks with #8 screws. For each surge protection panel, terminate all grounds from the surge protection devices on a copper equipment ground bus attached to the surge protection panel. Wire the terminals to the rear of a standard input file using spade lugs for input file protection.

Provide permanent labels that indicate the slot and the pins connected to each terminal that may be viewed from the rear cabinet door. Label and orient terminals so that each pair of inputs is next to each other. Indicate on the labeling the input file (I or J), the slot number (1-14) and the terminal pins of the input slots (either D & E for upper or J & K for lower).

Provide a minimum 14 x 16 inch pull out, hinged top shelf located immediately below controller mounting section of the cabinet. Ensure the shelf is designed to fully expose the table surface outside the controller at a height approximately even with the bottom of the controller. Ensure the shelf has a storage bin interior which is a minimum of 1 inch deep and approximately the same dimensions as the shelf. Provide an access to the storage area by lifting the hinged top of the shelf. Fabricate the shelf and slide from aluminum or stainless steel and ensure the assembly can support the 2070L controller plus 15 pounds of additional weight. Ensure shelf has a locking mechanism to secure it in the fully extended position and does not inhibit the removal of the 2070L controller or removal of cards inside the controller when fully extended. Provide a locking mechanism that is easily released when the shelf is to be returned to its non-use position directly under the controller.

D. Model 2018 Enhanced Conflict Monitor:

Furnish Model 2018 Enhanced Conflict Monitors that provide monitoring of 18 channels. Ensure each channel consists of a green, yellow, and red field signal input. Ensure that the conflict monitor meets or exceeds CALTRANS' Transportation Electrical Equipment Specifications dated March 12, 2009, with Erratum 1 (hereafter referred to as CALTRANS' 2009 TEES) for a model 210 monitor unit and other requirements stated in this specification.

Ensure the conflict monitor is provided with an 18 channel conflict programming card. Pin EE and Pin T of the conflict programming card shall be connected together. Pin 16 of the conflict programming card shall be floating. Ensure that the absence of the conflict programming card will cause the conflict monitor to trigger (enter into fault mode), and remain in the triggered state until the programming card is properly inserted and the conflict monitor is reset.

Provide a conflict monitor that incorporates LED indicators into the front panel to dynamically display the status of the monitor under normal conditions and to provide a comprehensive review of field inputs with monitor status under fault conditions. Ensure that the monitor indicates the channels that were active during a conflict condition and the channels that experienced a failure for all other per channel fault conditions detected. Ensure that these indications and the status of each channel are retained until the Conflict Monitor is reset. Furnish LED indicators for the following:

- AC Power (Green LED indicator)
- VDC Failed (Red LED indicator)
- WDT Error (Red LED indicator)
- Conflict (Red LED indicator)
- Red Fail (Red LED indicator)
- Dual Indication (Red LED indicator)

- Yellow/Clearance Failure (Red LED indicator)
- PCA/PC Ajar (Red LED indicator)
- Monitor Fail/Diagnostic Failure (Red LED indicator)
- 54 Channel Status Indicators (1 Red, 1 Yellow, and 1 Green LED indicator for each of the 18 channels)

Provide a switch to set the Red Fail fault timing. Ensure that when the switch is in the ON position the Red Fail fault timing value is set to 1350 +/- 150 ms (2018 mode). Ensure that when the switch is in the OFF position the Red Fail fault timing value is set to 850 +/- 150 ms (210 mode).

Provide a switch to set the Watchdog fault timing. Ensure that when the switch is in the ON position the Watchdog fault timing value is set to 1.0 +/- 0.1 s (2018 mode). Ensure that when the switch is in the OFF position the Watchdog fault timing value is set to 1.5 +/- 0.1 s (210 mode).

Provide a jumper or switch to set the AC line brown-out levels. Ensure that when the jumper is present or the switch is in the ON position the AC line dropout voltage threshold is 98 +/- 2 Vrms, the AC line restore voltage threshold is 103 +/- 2 Vrms, and the AC line brown-out timing value is set to 400 +/- 50ms (2018 mode). Ensure that when the jumper is not present or the switch is in the OFF position the AC line dropout voltage threshold is 92 +/- 2 Vrms, the AC line restore voltage threshold is 98 +/- 2 Vrms, and the AC line brown-out timing value is set to 80 +/- 17 ms (210 mode).

Provide a jumper or switch that will enable and disable the Watchdog Latch function. Ensure that when the jumper is not present or the switch is in the OFF position the Watchdog Latch function is disabled. In this mode of operation, a Watchdog fault will be reset following a power loss, brownout, or power interruption. Ensure that when the jumper is present or the switch is in the ON position the Watchdog Latch function is enabled. In this mode of operation, a Watchdog fault will be retained until a Reset command is issued.

Provide a jumper that will reverse the active polarity for pin #EE (output relay common). Ensure that when the jumper is not present pin #EE (output relay common) will be considered ‘Active’ at a voltage greater than 70 Vrms and ‘Not Active’ at a voltage less than 50 Vrms (Caltrans mode). Ensure that when the jumper is present pin #EE (output relay common) will be considered ‘Active’ at a voltage less than 50 Vrms and ‘Not Active’ at a voltage greater than 70 Vrms (Failsafe mode).

In addition to the connectors required by CALTRANS’ 2009 TEES, provide the conflict monitor with a red interface connector mounted on the front of the monitor. Ensure the connector is a 20 pin, right angle, center polarized, male connector with latching clip locks and polarizing keys. Ensure the right angle solder tails are designed for a 0.062” thick printed circuit board. Keying of the connector shall be between pins 3 and 5, and between 17 and 19. Ensure the connector has two rows of pins with the odd numbered pins on one row and the even pins on the other row. Ensure the connector pin row spacing is 0.10” and pitch is 0.10”. Ensure the mating length of the connector pins is 0.24”. Ensure the pins are finished with gold plating 30μ” thick.

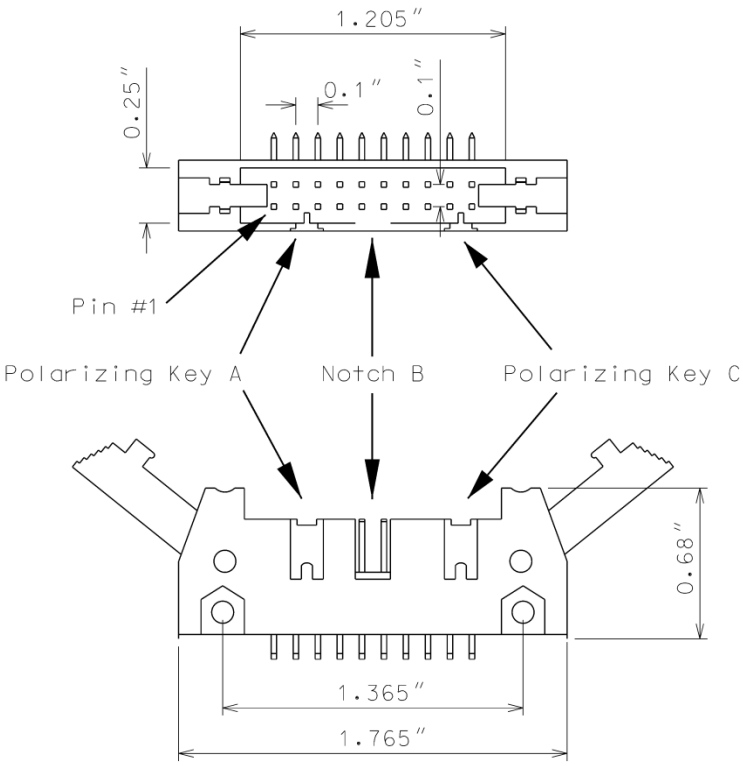

Ensure the red interface connector pins on the monitor have the following functions:

Pin #	Function	Pin #	Function
1	Channel 15 Red	2	Channel 16 Red
3	Channel 14 Red	4	Chassis Ground
5	Channel 13 Red	6	Special Function 2
7	Channel 12 Red	8	Special Function 1
9	Channel 10 Red	10	Channel 11 Red
11	Channel 9 Red	12	Channel 8 Red
13	Channel 7 Red	14	Channel 6 Red
15	Channel 5 Red	16	Channel 4 Red
17	Channel 3 Red	18	Channel 2 Red
19	Channel 1 Red	20	Red Enable

Ensure that removal of the P20 cable connector will cause the conflict monitor to recognize a latching fault condition and place the cabinet into flashing operation.

Provide Special Function 1 and Special Function 2 inputs to the unit which shall disable only Red Fail Monitoring when either input is sensed active. A Special Function input shall be sensed active when the input voltage exceeds 70 Vrms with a minimum duration of 550 ms. A Special Function input shall be sensed not active when the input voltage is less than 50 Vrms or the duration is less than 250 ms. A Special Function input is undefined by these specifications and may or may not be sensed active when the input voltage is between 50 Vrms and 70 Vrms or the duration is between 250 ms and 550 ms.

Ensure the conflict monitor recognizes field signal inputs for each channel that meet the following requirements:

- consider a Red input greater than 70 Vrms and with a duration of at least 500 ms as an "on" condition;
- consider a Red input less than 50 Vrms or with a duration of less than 200 ms as an "off" condition (no valid signal);
- consider a Red input between 50 Vrms and 70 Vrms or with a duration between 200 ms and 500 ms to be undefined by these specifications;
- consider a Green or Yellow input greater than 25 Vrms and with a duration of at least 500 ms as an "on" condition;
- consider a Green or Yellow input less than 15 Vrms or with a duration of less than 200 ms as an "off" condition; and
- consider a Green or Yellow input between 15 Vrms and 25 Vrms or with a duration between 200 ms and 500 ms to be undefined by these specifications.

Provide a conflict monitor that recognizes the faults specified by CALTRANS' 2009 TEES and the following additional faults. Ensure the conflict monitor will trigger upon detection of a fault and will remain in the triggered (in fault mode) state until the unit is reset at the front panel or through the external remote reset input for the following failures:

1. **Red Monitoring or Absence of Any Indication (Red Failure):** A condition in which no "on" voltage signal is detected on any of the green, yellow, or red inputs to a given monitor channel. If a signal is not detected on at least one input (R, Y, or G) of a conflict monitor channel for a period greater than 1000 ms when used with a 170 controller and 1500 ms when used with a 2070 controller, ensure monitor will trigger and put the intersection into flash. If the absence of any indication condition lasts less than 700 ms when used with a 170 controller and 1200 ms when used with a 2070 controller, ensure conflict monitor will not trigger. Red fail monitoring shall be enabled on a per channel basis by the use of switches located on the conflict monitor. Have red monitoring occur when all of the following input conditions are in effect:

   a) Red Enable input to monitor is active (Red Enable voltages are "on" at greater than 70 Vrms, off at less than 50 Vrms, undefined between 50 and 70 Vrms), and

   b) Neither Special Function 1 nor Special Function 2 inputs are active.

c) Pin #EE (output relay common) is not active

2. **Short/Missing Yellow Indication Fault (Clearance Error):** Yellow indication following a green is missing or shorter than 2.7 seconds (with ± 0.1-second accuracy). If a channel fails to detect an "on" signal at the Yellow input for a minimum of 2.7 seconds (± 0.1 second) following the detection of an "on" signal at a Green input for that channel, ensure that the monitor triggers and generates a clearance/short yellow error fault indication. Short/missing yellow (clearance) monitoring shall be enabled on a per channel basis by the use of switches located on the conflict monitor. This fault shall not occur when the channel is programmed for Yellow Inhibit, when the Red Enable signal is inactive or pin #EE (output relay common) is active.
3. **Dual Indications on the Same Channel:** In this condition, more than one indication (R,Y,G) is detected as "on" at the same time on the same channel. If dual indications are detected for a period greater than 500 ms, ensure that the conflict monitor triggers and displays the proper failure indication (Dual Ind fault). If this condition is detected for less than 200 ms, ensure that the monitor does not trigger. G-Y-R dual indication monitoring shall be enabled on a per channel basis by the use of switches located on the conflict monitor. G-Y dual indication monitoring shall be enabled for all channels by use of a switch located on the conflict monitor. This fault shall not occur when the Red Enable signal is inactive or pin #EE (output relay common) is active.
4. **Configuration Settings Change:** The configuration settings are comprised of (as a minimum) the permissive diode matrix, dual indication switches, yellow disable jumpers, any option switches, any option jumpers, and the Watchdog Enable switch. Ensure the conflict monitor compares the current configuration settings with the previous stored configuration settings on power-up, on reset, and periodically during operation. If any of the configuration settings are changed, ensure that the conflict monitor triggers and causes the program card indicator to flash. Ensure that configuration change faults are only reset by depressing and holding the front panel reset button for a minimum of three seconds. Ensure the external remote reset input does not reset configuration change faults.

Ensure the conflict monitor will trigger and the AC Power indicator will flash at a rate of 2 Hz ± 20% with a 50% duty cycle when the AC Line voltage falls below the "drop-out" level. Ensure the conflict monitor will resume normal operation when the AC Line voltage returns above the "restore" level. Ensure the AC Power indicator will remain illuminated when the AC voltage returns above the "restore" level. Should an AC Line power interruption occur while the monitor is in the fault mode, then upon restoration of AC Line power, the monitor will remain in the fault mode and the correct fault and channel indicators will be displayed.

Provide a flash interval of at least 6 seconds and at most 10 seconds in duration following a power-up, an AC Line interruption, or a brownout restore. Ensure the conflict monitor will suspend all fault monitoring functions, close the Output relay contacts, and flash the AC indicator at a rate of 4 Hz ± 20% with a 50% duty cycle during this interval. Ensure the termination of the flash interval after at least 6 seconds if the Watchdog input has made 5 transitions between the True and False state and the AC Line voltage is greater than the "restore" level. If the watchdog input has not made

5 transitions between the True and False state within 10 ± 0.5 seconds, the monitor shall enter a WDT error fault condition.

Ensure the conflict monitor will monitor an intersection with a minimum of four approaches using the four-section Flashing Yellow Arrow (FYA) vehicle traffic signal as outlined by the NCHRP 3-54 research project for protected-permissive left turn signal displays. Ensure the conflict monitor will operate in the FYA mode and FYAc (Compact) mode as specified below to monitor each channel pair for the following fault conditions: Conflict, Flash Rate Detection, Red Fail, Dual Indication, and Clearance. Provide a switch to select between the FYA mode and FYAc mode. Provide a switch to select each FYA phase movement for monitoring.

FYA mode

FYA Signal Head	Phase 1	Phase 3	Phase 5	Phase 7
Red Arrow	Channel 9 Red	Channel 10 Red	Channel 11 Red	Channel 12 Red
Yellow Arrow	Channel 9 Yellow	Channel 10 Yellow	Channel 11 Yellow	Channel 12 Yellow
Flashing Yellow Arrow	Channel 9 Green	Channel 10 Green	Channel 11 Green	Channel 12 Green
Green Arrow	Channel 1 Green	Channel 3 Green	Channel 5 Green	Channel 7 Green

FYAc mode

FYA Signal Head	Phase 1	Phase 3	Phase 5	Phase 7
Red Arrow	Channel 1 Red	Channel 3 Red	Channel 5 Red	Channel 7 Red
Yellow Arrow	Channel 1 Yellow	Channel 3 Yellow	Channel 5 Yellow	Channel 7 Yellow
Flashing Yellow Arrow	Channel 1 Green	Channel 3 Green	Channel 5 Green	Channel 7 Green
Green Arrow	Channel 9 Green	Channel 9 Yellow	Channel 10 Green	Channel 10 Yellow

If a FYA channel pair is enabled for FYA operation, the conflict monitor will monitor the FYA logical channel pair for the additional following conditions:

1. **Conflict:** Channel conflicts are detected based on the permissive programming jumpers on the program card. This operation remains unchanged from normal operation except for the solid Yellow arrow (FYA clearance) signal.
2. **Yellow Change Interval Conflict:** During the Yellow change interval of the Permissive Turn channel (flashing Yellow arrow) the conflict monitor shall verify that no conflicting channels to the solid Yellow arrow channel (clearance) are active. These conflicting channels shall be determined by the program card compatibility programming of the Permissive Turn channel (flashing Yellow arrow). During the Yellow change interval of the Protected Turn channel (solid Green arrow) the conflict monitor shall verify that no conflicting channels to the solid Yellow arrow channel (clearance) are active as determined by the program card compatibility programming of the Protected Turn channel (solid Green arrow).
3. **Flash Rate Detection:** The conflict monitor unit shall monitor for the absence of a valid flash rate for the Permissive turn channel (flashing Yellow arrow). If the Permissive turn channel (flashing Yellow arrow) is active for a period greater than 1600 milliseconds, ensure the conflict monitor triggers and puts the intersection into flash. If the Permissive turn channel (flashing Yellow arrow) is active for a period less than 1400 milliseconds, ensure the conflict monitor does not trigger. Ensure the conflict monitor will remain in the triggered (in fault mode) state until the unit is reset at the front panel or through the external remote reset input. Provide a jumper or switch that will enable and disable the Flash Rate Detection function. Ensure that when the jumper is not present or the switch is in the OFF position the Flash Rate Detection function is enabled. Ensure that when the jumper is present or the switch is in the ON position the Flash Rate Detection function is disabled.
4. **Red Monitoring or Absence of Any Indication (Red Failure):** The conflict monitor unit shall detect a red failure if there is an absence of voltage on all four of the inputs of a FYA channel pair (RA, YA, FYA, GA).
5. **Dual Indications on the Same Channel:** The conflict monitor unit shall detect a dual indication if two or more inputs of a FYA channel pair (RA, YA, FYA, GA) are “on” at the same time.
6. **Short/Missing Yellow Indication Fault (Clearance Error):** The conflict monitor unit shall monitor the solid Yellow arrow for a clearance fault when terminating both the Protected Turn channel (solid Green arrow) interval and the Permissive Turn channel (flashing Yellow arrow) interval.

Ensure that the conflict monitor will log at least nine of the most recent events detected by the monitor in non-volatile EEPROM memory (or equivalent). For each event, record at a minimum the time, date, type of event, status of each field signal indication with RMS voltage, and specific channels involved with the event. Ensure the conflict monitor will log the following events: monitor reset, configuration, previous fault, and AC line. Furnish the signal sequence log that shows all channel states (Greens, Yellows, and Reds) and the Red Enable State for a minimum of 2 seconds prior to the current fault trigger point. Ensure the display resolution of the inputs for the signal sequence log is not greater than 50 ms.

For conflict monitors used within an Ethernet communications system, provide a conflict monitor with an Ethernet 10/100 Mbps, RJ-45 port for data communication access to the monitor by a local notebook computer and remotely via a workstation or notebook computer device connected to the signal system local area network. The Ethernet port shall be electrically isolated from the conflict monitor's electronics and shall provide a minimum of 1500 Vrms isolation. Integrate monitor with Ethernet network in cabinet. Provide software to retrieve the time and date from a network server in order to synchronize the on-board times between the conflict monitor and the controller. Furnish and install the following Windows based, graphic user interface software on workstations and notebook computers where the signal system client software is installed: 1) software to view and retrieve all event log information, 2) software that will search and display a list of conflict monitor IP addresses and IDs on the network, and 3) software to change the conflict monitor's network parameters such as IP address and subnet mask.

For non-Ethernet connected monitors, provide a RS-232C/D compliant port (DB-9 female connector) on the front panel of the conflict monitor in order to provide communications from the conflict monitor to the 170/2070 controller or to a Department-furnished laptop computer. Electrically isolate the port interface electronics from all monitor electronics, excluding Chassis Ground. Ensure that the controller can receive all event log information through a controller Asynchronous Communications Interface Adapter (Type 170E) or Async Serial Comm Module (2070). Furnish and connect a serial cable from the conflict monitor's DB-9 connector to Comm Port 1 of the 2070 controller. Ensure conflict monitor communicates with the controller. Provide a Windows based graphic user interface software to communicate directly through the same monitor RS-232C/D compliant port to retrieve and view all event log information to a Department-furnished laptop computer. The RS-232C/D compliant port on the monitor shall allow the monitor to function as a DCE device with pin connections as follows:

Conflict Monitor RS-232C/D (DB-9 Female) Pinout		
Pin Number	**Function**	**I/O**
1	DCD	O
2	TX Data	O
3	RX Data	I
4	DTR	I
5	Ground	-
6	DSR	O
7	CTS	I
8	RTS	O
9	NC	-

MONITOR BOARD EDGE CONNECTOR

Pin #	Function (Back Side)	Pin #	Function (Component Side)
1	Channel 2 Green	A	Channel 2 Yellow
2	Channel 13 Green	B	Channel 6 Green
3	Channel 6 Yellow	C	Channel 15 Green
4	Channel 4 Green	D	Channel 4 Yellow
5	Channel 14 Green	E	Channel 8 Green
6	Channel 8 Yellow	F	Channel 16 Green
7	Channel 5 Green	H	Channel 5 Yellow
8	Channel 13 Yellow	J	Channel 1 Green
9	Channel 1 Yellow	K	Channel 15 Yellow
10	Channel 7 Green	L	Channel 7 Yellow
11	Channel 14 Yellow	M	Channel 3 Green
12	Channel 3 Yellow	N	Channel 16 Yellow
13	Channel 9 Green	P	Channel 17 Yellow
14	Channel 17 Green	R	Channel 10 Green
15	Channel 11 Yellow	S	Channel 11 Green
16	Channel 9 Yellow	T	Channel 18 Yellow
17	Channel 18 Green	U	Channel 10 Yellow
--		--	
18	Channel 12 Yellow	V	Channel 12 Green
19	Channel 17 Red	W	Channel 18 Red
20	Chassis Ground	X	Not Assigned
21	AC-	Y	DC Common
22	Watchdog Timer	Z	External Test Reset
23	+24VDC	AA	+24VDC
24	Tied to Pin 25	BB	Stop Time (Output)
25	Tied to Pin 24	CC	Not Assigned
26	Not Assigned	DD	Not Assigned
27	Relay Output, Side #3, N.O.	EE	Relay Output,Side #2,Common
28	Relay Output, Side #1, N.C.	FF	AC+

-- Slotted for keying between Pins 17/U and 18/V

CONFLICT PROGRAM CARD PIN ASSIGNMENTS

Pin #	Function (Back Side)	Pin #	Function (Component Side)
1	Channel 2 Green	A	Channel 1 Green
2	Channel 3 Green	B	Channel 2 Green
3	Channel 4 Green	C	Channel 3 Green
4	Channel 5 Green	D	Channel 4 Green
5	Channel 6 Green	E	Channel 5 Green
6	Channel 7 Green	F	Channel 6 Green
7	Channel 8 Green	H	Channel 7 Green
8	Channel 9 Green	J	Channel 8 Green
9	Channel 10 Green	K	Channel 9 Green
10	Channel 11 Green	L	Channel 10 Green
11	Channel 12 Green	M	Channel 11 Green
12	Channel 13 Green	N	Channel 12 Green
13	Channel 14 Green	P	Channel 13 Green
14	Channel 15 Green	R	Channel 14 Green
15	Channel 16 Green	S	Channel 15 Green
16	N/C	T	PC AJAR
17	Channel 1 Yellow	U	Channel 9 Yellow
18	Channel 2 Yellow	V	Channel 10 Yellow
19	Channel 3 Yellow	W	Channel 11 Yellow
20	Channel 4 Yellow	X	Channel 12 Yellow
21	Channel 5 Yellow	Y	Channel 13 Yellow
22	Channel 6 Yellow	Z	Channel 14 Yellow
23	Channel 7 Yellow	AA	Channel 15 Yellow
24	Channel 8 Yellow	BB	Channel 16 Yellow
--		--	
25	Channel 17 Green	CC	Channel 17 Yellow
26	Channel 18 Green	DD	Channel 18 Yellow
27	Channel 16 Green	EE	PC AJAR (Program Card)
28	Yellow Inhibit Common	FF	Channel 17 Green

-- Slotted for keying between Pins 24/BB and 25/CC

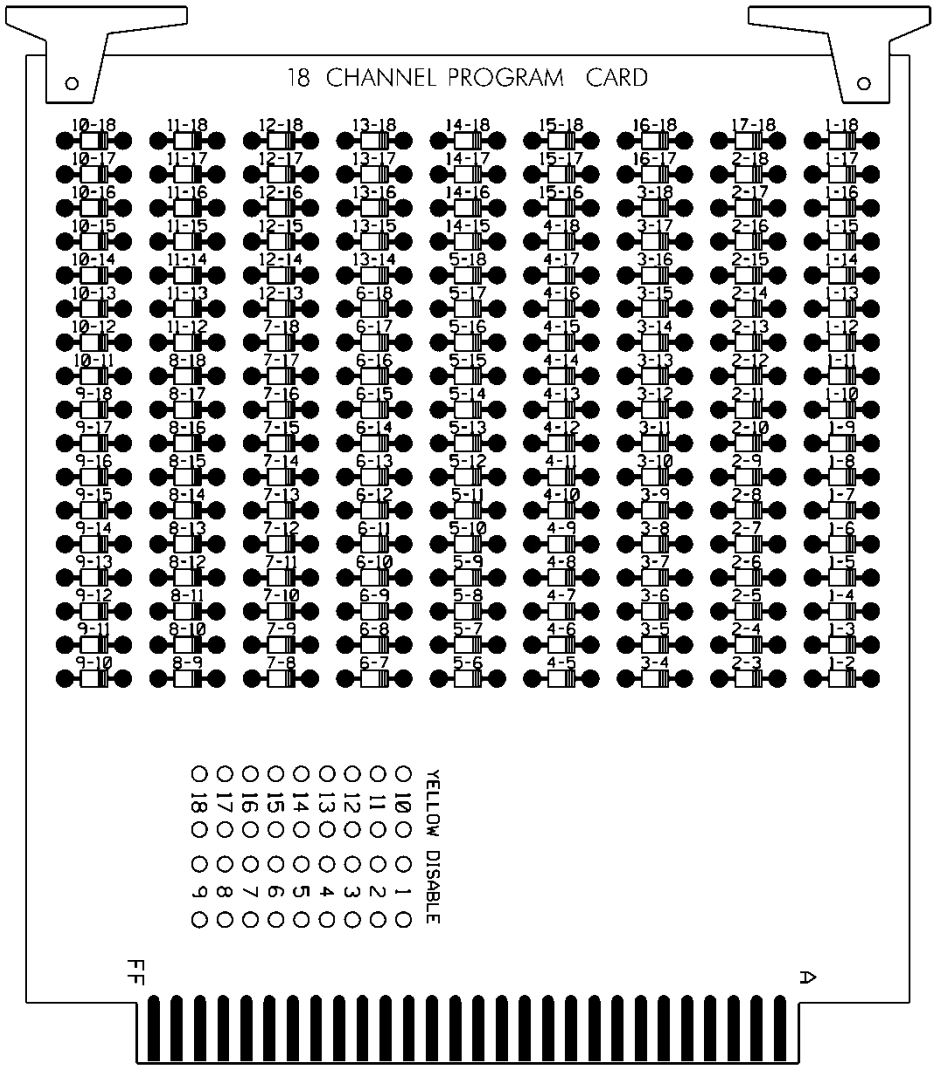

E. Preemption and Sign Control Box

Provide preemption and sign control box to operate in a Model 332 and Model 336S cabinet. Provide hardware to mount the box to the cage of the cabinet to ensure the front side is facing the opposite side of the cabinet. Furnish the material of the box from a durable finished metallic or thermoplastic case. Ensure the size of the box is not greater than 7(l) x 5(w) x 5(d) inches. Ensure that no modification is necessary to mount the box on the cabinet cage.

Provide the following components in the preemption and sign control box: relays, fuses, terminal blocks, MOVs, resistor, RC network, lamp, and push button switch.

Provide UL Listed or Recognized relay K1 as a DPDT enclosed relay (120 VAC, 60 Hz coil) with an 8-pin octal-style plug and associated octal base. Provide contact material made of AgCdO with a 10 amp, 240 VAC rating. Ensure the relay has a specified pickup voltage of 102 VAC.

Provide relay SSR1 as a Triac SPST normally open solid state relay that is rated for 120 VAC input and zero-crossing (resistive load) 25 amp @ 120 VAC output. Ensure the relay turns on at 90 Vrms within 10 ms and turns off at 10 Vrms within 40 ms. Ensure the relay has physical

characteristics as shown in the wiring detail in Figure 1. Provide 4 terminal screws with saddle clamps.

Provide fuses F1 and F2 as a UL Listed ¼″ x 1-1/4″ glass tube rated at 250 volts with a 10kA interrupting rating. Ensure F1 non-delay (fast-acting) and F2 slow-blow (time-delay) fuses have a maximum opening times of 60 minutes and 120 seconds for currents of 135 and 200 percent of the ampere rating, respectively. Ensure F2 slow-blow (time-delay) fuses have a minimum opening times of 12 seconds at 200 percent of the ampere rating. Provide fuse holders that are UL Recognized panel-mounted holders rated 250V, 15 ampere minimum with bayonet-type knobs which accept ¼″ x 1-1/4″ glass tube fuses.

Provide terminal blocks that are rated for 300V and are made of electrical grade thermoplastic or thermosetting plastic. Ensure each terminal block is of closed back design and has recessed-screw terminals with molded barriers between terminals. Ensure each terminal block is labeled with a block designation. Ensure each terminal is labeled with the function and a number.

Provide 3/4-inch diameter radial lead UL-recognized metal oxide varistors (MOVs) that have electrical performance as outlined below.

PROPERTIES OF MOV SURGE PROTECTOR	
Maximum Continuous Applied Voltage at 185° F	150 VAC (RMS) 200 VDC
Maximum Peak 8x20µs Current at 185° F	6500 A
Maximum Energy Rating at 185° F	80 J
Voltage Range 1 mA DC Test at 77° F	212-268 V
Max. Clamping Voltage 8x20µs, 100A at 77° F	395 V
Typical Capacitance (1 MHz) at 77° F	1600 pF

Provide resistor R1 as a 2K ohm, 12 watt, wirewound resistor with tinned terminals and attaching leads. Ensure the resistor is spaced apart from surrounding wires.

Provide a LED or incandescent lamp that has a voltage rating of 120 VAC with a minimum life rating at 50,000 hours.

Wire the preemption and sign control box as shown in Figure 1.

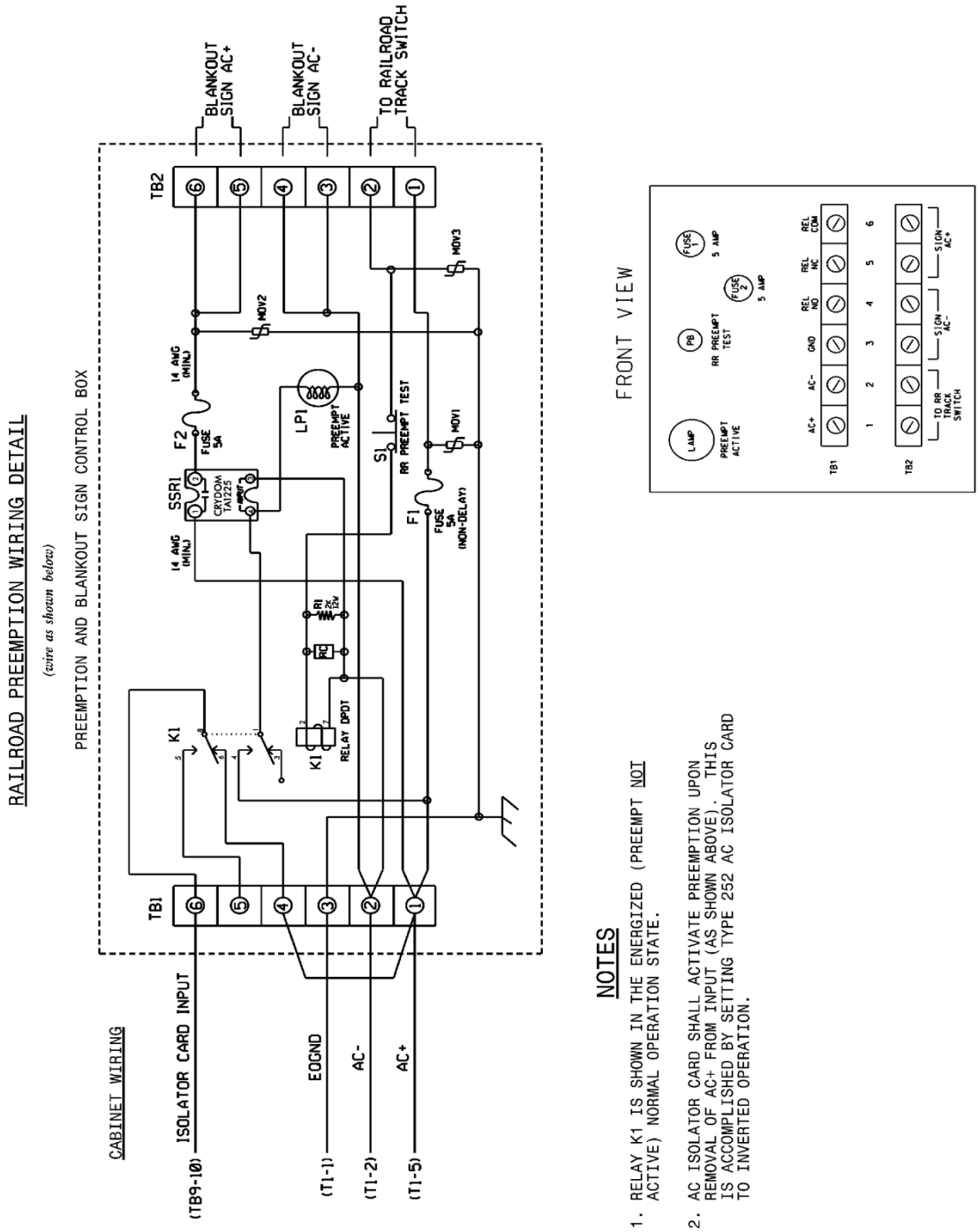
RAILROAD PREEMPTION WIRING DETAIL
(wire as shown below)
PREEMPTION AND BLANKOUT SIGN CONTROL BOX
CABINET WIRING
ISOLATOR CARD INPUT
(TB9-10)
(T1-1)
(T1-2)
(T1-5)
EQGND
AC-
AC+
TB1
TB2
K1
RELAY DPDT
R1
R2
SSR1
CRYDOM
14 AWG (MIN.)
F2
FUSE 5A
LP1
PREEMPT ACTIVE
S1
RR PREEMPT TEST
F1
FUSE 5A (NON-DELAY)
MOV1
MOV2
MOV3
BLANKOUT SIGN AC+
BLANKOUT SIGN AC-
TO RAILROAD TRACK SWITCH
FRONT VIEW
LAMP
PB
FUSE 1
FUSE 2
5 AMP
AC+
AC-
GND
REL NO
REL NC
REL COM
TO RR TRACK SWITCH
SIGN AC-
SIGN AC+
NOTES
1. RELAY K1 IS SHOWN IN THE ENERGIZED (PREEMPT NOT ACTIVE) NORMAL OPERATION STATE.
2. AC ISOLATOR CARD SHALL ACTIVATE PREEMPTION UPON REMOVAL OF AC+ FROM INPUT (AS SHOWN ABOVE). THIS IS ACCOMPLISHED BY SETTING TYPE 252 AC ISOLATOR CARD TO INVERTED OPERATION.

Figure 1

5.4. MATERIALS – TYPE 170 DETECTOR SENSOR UNITS

Furnish detector sensor units that comply with Chapter 5 Section 1, "General Requirements," and Chapter 5 Section 2, "Model 222 & 224 Loop Detector Sensor Unit Requirements," of the CALTRANS "Transportation Electrical Equipment Specifications" dated March 12, 2009 with Erratum 1.

5.5. MATERIALS – TYPE 2070E CONTROLLERS

Furnish model 2070E controller units that conform to CALTRANS *Transportation Electrical Equipment Specifications* (TEES) (dated March 12, 2009, plus Errata 1 dated January 21, 2010 and Errata 2 dated December 5, 2014) except as required herein.

The Department will provide software at the beginning of the burning-in period. Contractor shall give 5 working days notice before needing software. Program software provided by the Department.

Provide model 2070E controllers with OS-9 release 1.3.1 or later with kernel edition #380 or later operating software and device drivers, composed of the unit chassis and at a minimum the following modules and assemblies:

- MODEL 2070-1E, CPU Module, Single Board, with 8Mb Datakey (blue in color)
- MODEL 2070-2E+, Field I/O Module (FI/O)
  - Note: Configure the Field I/O Module to disable both the External WDT Shunt/Toggle Switch and SP3 (SP3 active indicator is "off")
- MODEL 2070-3B, Front Panel Module (FP), Display B (8x40)
- MODEL 2070-4A, Power Supply Module, 10 AMP
- MODEL 2070-7A, Async Serial Com Module (9-pin RS-232)

5.6. MATERIALS – TYPE 2070LX CONTROLLERS

Furnish model 2070LX controller units that conform to CALTRANS *Transportation Electrical Equipment Specifications* (TEES) (dated March 12, 2009, plus Errata 1 dated January 21, 2010 and Errata 2 dated December 5, 2014) except as required herein.

The Department will provide software at the beginning of the burning-in period. Contractor shall give 5 working days notice before needing software. Program software provided by the Department.

Provide model 2070LX controllers with Linux kernel 2.6.18 or higher and device drivers, composed of the unit chassis and at a minimum the following modules and assemblies:

- MODEL 2070-1C, CPU Module, Single Board, with 8Mb Datakey (blue in color)
- MODEL 2070-2E+, Field I/O Module (FI/O)
  - Note: Configure the Field I/O Module to disable both the External WDT Shunt/Toggle Switch and SP3 (SP3 active indicator is "off")
- MODEL 2070-3B, Front Panel Module (FP), Display B (8x40)
- MODEL 2070-4A, Power Supply Module, 10 AMP

Provide a Board Support Package (BSP) to the state and to any specified applications software manufacturer when requested by the state to facilitate the porting of application software.

6. ETHERNET EDGE SWITCH

Furnish and install a managed Ethernet edge switch as specified below that is fully compatible, interoperable, and completely interchangeable and functional within the existing City or Division traffic signal system communications network.

6.1. DESCRIPTION

A. Ethernet Edge Switch:

Furnish and install a hardened, field Ethernet edge switch (hereafter "edge switch") for traffic signal controllers as specified below. Ensure that the edge switch provides wire-speed, fast Ethernet connectivity at transmission rates of 100 megabits per second from each remote ITS device location to the routing switches.

Contact the City or Division to arrange for the programming of the new Field Ethernet Switches with the necessary network configuration data, including but not limited to, the Project IP Address, Default Gateway, Subnet Mask and VLAN ID information. Provide a minimum five (5) days working notice to allow the City or Division to program the new devices.

B. Network Management:

Ensure that the edge switch is fully compatible with the City's or Division's existing Network Management Software.

6.2. MATERIALS

A. General:

Ensure that the edge switch is fully compatible and interoperable with the trunk Ethernet network interface and that the edge switch supports half and full duplex Ethernet communications.

Furnish an edge switch that provide 99.999% error-free operation, and that complies with the Electronic Industries Alliance (EIA) Ethernet data communication requirements using single-mode fiber-optic transmission medium and copper transmission medium. Ensure that the edge switch has a minimum mean time between failures (MTBF) of 10 years, or 87,600 hours, as calculated using the Bellcore/Telcordia SR-332 standard for reliability prediction.

B. Compatibility Acceptance

The Engineer has the authority to require the Contractor to submit a sample Field Ethernet Switch and Field Ethernet Transceiver along with all supporting documentation, software and testing procedures to allow a compatibility acceptance test be performed prior to approving the proposed Field Ethernet Switch and Field Ethernet Transceiver for deployment**. The Compatibility Acceptance testing will ensure that the proposed device is 100% compatible and interoperable with the existing City Signal System network, monitoring software and Traffic Operations Center network hardware.** Allow fifteen (15) working days for the Compatibility Acceptance Testing to be performed

C. Standards:

Ensure that the edge switch complies with all applicable IEEE networking standards for Ethernet communications, including but not limited to:

- IEEE 802.1D standard for media access control (MAC) bridges used with the Spanning Tree Protocol (STP);
- IEEE 802.1Q standard for port-based virtual local area networks (VLANs);
- IEEE 802.1P standard for Quality of Service (QoS);
- IEEE 802.1w standard for MAC bridges used with the Rapid Spanning Tree Protocol (RSTP);
- IEEE 802.1s standard for MAC bridges used with the Multiple Spanning Tree Protocol;
- IEEE 802.1x standard for port based network access control, including RADIUS;
- IEEE 802.3 standard for local area network (LAN) and metropolitan area network (MAN) access and physical layer specifications;
- IEEE 802.3u supplement standard regarding 100 Base TX/100 Base FX;
- IEEE 802.3x standard regarding flow control with full duplex operation; and
- IFC 2236 regarding IGMP v2 compliance.
- IEEE 802.1AB Link Layer Discovery Protocol (LLDP)
- IEEE 802.3ad Ethernet Link Aggregation
- IEEE 802.3i for 10BASE-T (10 Mbit/s over Fiber-Optic)
- IEEE 802.3ab for 1000BASE-T (1Gbit/s over Ethernet)
- IEEE 802.3z for 1000BASE-X (1 Gbit/s Ethernet over Fiber-Optic)

D. Functional:

Ensure that the edge switch supports all Layer 2 management features and certain Layer 3 features related to multicast data transmission and routing. These features shall include, but not be limited to:

- An STP healing/convergence rate that meets or exceeds specifications published in the IEEE 802.1D standard.
- An RSTP healing/convergence rate that meets or exceeds specifications published in the IEEE 802.1w standard.
- An Ethernet edge switch that is a port-based VLAN and supports VLAN tagging that meets or exceeds specifications as published in the IEEE 802.1Q standard, and has a minimum 4-kilobit VLAN address table (254 simultaneous).
- A forwarding/filtering rate that is a minimum of 14,880 packets per second for 10 megabits per second and 148,800 packets per second for 100 megabits per second.
- A minimum 4-kilobit MAC address table.
- Support of Traffic Class Expediting and Dynamic Multicast Filtering.
- Support of, at a minimum, snooping of Version 2 & 3 of the Internet Group Management Protocol (IGMP).
- Support of remote and local setup and management via telnet or secure Web-based GUI and command line interfaces.
- Support of the Simple Network Management Protocol version 3 (SNMPv3). Verify that the Ethernet edge switch can be accessed using the resident EIA-232 management port, a telecommunication network, or the Trivial File Transfer Protocol (TFTP).

- Port security through controlling access by the users. Ensure that the Ethernet edge switch has the capability to generate an alarm and shut down ports when an unauthorized user accesses the network.
- Support of remote monitoring (RMON-1 & RMON-2) of the Ethernet agent.
- Support of the TFTP and SNTP. Ensure that the Ethernet edge switch supports port mirroring for troubleshooting purposes when combined with a network analyzer.

E. Physical Features:

Ports: Provide 10/100/1000 Mbps auto-negotiating ports (RJ-45) copper Fast Ethernet ports for all edge switches. Provide auto-negotiation circuitry that will automatically negotiate the highest possible data rate and duplex operation possible with attached devices supporting the IEEE 802.3 Clause 28 auto-negotiation standard.

Optical Ports: Ensure that all fiber-optic link ports operate at 1310 or 1550 nanometers in single mode. Provide Type LC connectors for the optical ports, as specified in the Plans or by the Engineer. Do not use mechanical transfer registered jack (MTRJ) type connectors.

Provide an edge switch having a minimum of two optical 100/1000 Base X ports capable of transmitting data at 100/1000 megabits per second. Ensure that each optical port consists of a pair of fibers; one fiber will transmit (TX) data and one fiber will receive (RX) data. Ensure that the optical ports have an optical power budget of at least 15 dB.

Copper Ports: Provide an edge switch that includes a minimum of four copper ports. Provide Type RJ-45 copper ports and that auto-negotiate speed (i.e., 10/100/1000 Base) and duplex (i.e., full or half). Ensure that all 10/100/1000 Base TX ports meet the specifications detailed in this section and are compliant with the IEEE 802.3 standard pinouts. Ensure that all Category 5E unshielded twisted pair/shielded twisted pair network cables are compliant with the EIA/TIA-568-B standard.

*Port Security***:** Ensure that the edge switch supports/complies with the following (remotely) minimum requirements:

- Ability to configure static MAC addresses access;
- Ability to disable automatic address learning per ports; know hereafter as Secure Port. Secure Ports only forward; and
- Trap and alarm upon any unauthorized MAC address and shutdown for programmable duration. Port shutdown requires administrator to manually reset the port before communications are allowed.

F. Management Capabilities:

Ensure that the edge switch supports all Layer 2 management features and certain Layer 3 features related to multicast data transmission and routing. These features shall include, but not be limited to:

- An STP healing/convergence rate that meets or exceeds specifications published in the IEEE 802.1 D standards;
- An RSTP healing/convergence rate that meets or exceeds specifications published in the IEEE 802.1w standard;
- An Ethernet edge switch that is a port-based VLAN and supports VLAN tagging that meets or exceeds specifications as published in the IEEE 802.1Q standard, and has a minimum 4-kilobit VLAN address table (254 simultaneous);

- A forwarding/filtering rate that is a minimum of 14,880 packets per second for 10 megabits per second, 148,800 packets per second for 100 megabits per second and 1,488,000 packets per second for 1000 megabits per second;
- A minimum 4-kilobit MAC address table;
- Support of Traffic Class Expediting and Dynamic Multicast Filtering.
- Support of, at a minimum, snooping of Version 2 & 3 of the Internet Group Management Protocol (IGMP);
- Support of remote and local setup and management via telnet or secure Web-based GUI and command line interfaces; and
- Support of the Simple Network Management Protocol (SNMP). Verify that the Ethernet edge switch can be accessed using the resident EIA-232 management port, a telecommunication network, or the Trivial File Transfer Protocol (TFTP).

*Network Capabilities***:** Provide an edge switch that supports/complies with the following minimum requirements:

- Provide full implementation of IGMPv2 snooping (RFC 2236);
- Provide full implementation of SNMPv1, SNMPv2c, and/or SNMPv3;
- Provide support for the following RMON–I groups, at a minimum:
  - Part 1: Statistics
  - Part 2: History
  - Part 3: Alarm
  - Part 9: Event
- Provide support for the following RMON–2 groups, at a minimum:
  - Part 13: Address Map
  - Part 16: Layer Host
  - Part 17:Layer Matrix
  - Part 18:User History
- Capable of mirroring any port to any other port within the switch;
- Meet the IEEE 802.1Q (VLAN) standard per port for up to four VLANs;
- Meet the IEEE 802.3ad (Port Trunking) standard for a minimum of two groups of four ports;
- Password manageable;
- Telnet/CLI;
- HTTP (Embedded Web Server) with Secure Sockets Layer (SSL); and
- Full implementation of RFC 783 (TFTP) to allow remote firmware upgrades.

*Network Security***:** Provide an edge switch that supports/complies with the following (remotely) minimum network security requirements:

- Multi-level user passwords;
- RADIUS centralized password management (IEEE 802.1X);
- SNMPv3 encrypted authentication and access security;
- Port security through controlling access by the users: ensure that the Ethernet edge switch has the capability to generate an alarm and shut down ports when an unauthorized user accesses the network;
- Support of remote monitoring (RMON-1&2) of the Ethernet agent; and
- Support of the TFTP and SNTP. Ensure that the Ethernet edge switch supports port mirroring for troubleshooting purposes when combined with a network analyzer.

G. Electrical Specifications:

Ensure that the edge switch operates and power is supplied with 115 volts of alternating current (VAC). Ensure that the edge switch has a minimum operating input of 110 VAC and a maximum operating input of 130 VAC. Ensure that if the device requires operating voltages other than 120 VAC, supply the required voltage converter. Ensure that the maximum power consumption does not exceed 50 watts. Ensure that the edge switch has diagnostic light emitting diodes (LEDs), including link, TX, RX, speed (for Category 5E ports only), and power LEDs.

H. Environmental Specifications:

Ensure that the edge switch performs all of the required functions during and after being subjected to an ambient operating temperature range of -30 degrees to 165 degrees Fahrenheit as defined in the environmental requirements section of the NEMA TS 2 standard, with a noncondensing humidity of 0 to 95%.

Provide certification that the device has successfully completed environmental testing as defined in the environmental requirements section of the NEMA TS 2 standard. Provide certification that the device meets the vibration and shock resistance requirements of Sections 2.1.9 and 2.1.10, respectively, of the NEMA TS 2 standard. Ensure that the edge switch is protected from rain, dust, corrosive elements, and typical conditions found in a roadside environment.

The edge switch shall meet or exceed the following environmental standards:

- IEEE 1613 (electric utility substations)
- IEC 61850-3 (electric utility substations)
- IEEE 61800-3 (variable speed drive systems)
- IEC 61000-6-2 (generic industrial)
- EMF – FCC Part 15 CISPR (EN5502) Class A

I. Ethernet Patch Cable:

Furnish a factory pre-terminated/pre-connectorized Ethernet patch cable with each edge switch. Furnish Ethernet patch cables meeting the following physical requirements:

- Five (5)-foot length
- Category 5e or better
- Factory-installed RJ-45 connectors on both ends
- Molded anti-snag hoods over connectors
- Gold plated connectors

Furnish Fast Ethernet patch cords meeting the following minimum performance requirements:

- TIA/EIA-568-B-5, Additional Transmission Performance Specifications for 4-pair 100 Ω Enhanced Category 5 Cabling
- Frequency Range: 1-100 MHz
- Near-End Crosstalk (NEXT): 30.1 dB
- Power-sum NEXT: 27.1 dB
- Attenuation to Crosstalk Ratio (ACR): 6.1 dB
- Power-sum ACR: 3.1 dB
- Return Loss: 10dB

- Propagation Delay: 548 nsec

6.3. CONSTRUCTION METHODS

A. General:

Ensure that the edge switch is UL listed.

Verify that network/field/data patch cords meet all ANSI/EIA/TIA requirements for Category 5E and Category 6 four-pair unshielded twisted pair cabling with stranded conductors and RJ45 connectors.

Contact the Signal Shop a minimum of 5 days prior to installation for the most current edge switch IP Address, VLAN, subnet mask, default gateway and configuration files.

B. Edge Switch:

Mount the edge switch inside each field cabinet by securely fastening the edge switch to the upper end of the right rear vertical rail of the equipment rack using manufacturer-recommended or Engineer-approved attachment methods, attachment hardware and fasteners.

Ensure that the edge switch is mounted securely in the cabinet and is fully accessible by field technicians without blocking access to other equipment. Verify that fiber-optic jumpers consist of a length of cable that has connectors on both ends, primarily used for interconnecting termination or patching facilities and/or equipment.

6.4. MEASURMENT AND PAYMENT

Ethernet edge switch will be measured and paid as the actual number of Ethernet edge switches furnished, installed, and accepted.

No separate measurement will be made for Ethernet patch cable, power cord, mounting hardware, nuts, bolts, brackets, or edge switch programming as these will be considered incidental to furnishing and installing the edge switch.

Payment will be made under:

Ethernet Edge Switch.....Each

7. PRETERMINATED FIBER OPTIC DROP CABLE

7.1. DESCRIPTION

Furnish and install single mode fiber-optic (SMFO) drop cable assemblies, communications cable identification markers, lashing wire, and all necessary hardware.

7.2. MATERIALS

Refer to Division 10.

Item	Section
Cable Identification Markers	1098-10
Fiber-Optic Cable	1098-10

Furnish material, equipment and hardware under this section that is pre-approved on the ITS and Signals QPL.

A. Drop Cable Assembly:

Furnish a drop cable assembly to provide communications links between splice enclosures and Ethernet edge switches mounted in controller cabinets.

Provide an assembly that is factory-assembled and factory pre-tested with the cable length as determined by the Contractor to reach between the controller cabinet and splice enclosure plus the designated lengths of stored cable. Furnish a drop a cable assembly comprised of fiber-optic cable that has been factory pre-terminated on a factory pre-connectorized patch panel with six PC/ST connectors to form an integral pre-assembled unit. Furnish a drop-cable assembly that requires no field assembly, connectorization or termination other than splicing the free end of the drop cable into the fiber-optic trunk cable in a splice enclosure external to the cabinet.

Provide a drop cable assembly with a patch panel housed in a slim, compact, modular housing (i.e., strip). The compact modular patch panel shall have a rugged, durable housing that can be surface-mounted vertically to the face of the 19-inch equipment rack rail inside a controller cabinet. The dimensions of the modular patch panel shall not exceed 10” (h) x 1.75” (w) x 1.75” (d).

Furnish highly flexible, low bend radius single-mode fiber-optic cable that is of gel-free (i.e., dry cable) construction as described Subarticle 1098-10(A). A low bend radius cable is defined as a fiber-optic cable whose manufacturer-specified minimum bend radius does not exceed 5” when loaded and 4” when installed. Provide outdoor-rated, non-armored, riser-rated cable. Provide UV rated cable.

Use single-mode fiber-optic cable that does not exceed attenuation of 0.30 dB/km at 1550 nm and 0.40 dB/km at 1310 nm. Ensure attenuation loss for complete drop cable assembly does not exceed a mean value of 1.5 dB.

Provide metal connector housing, ceramic ferrules and coupler inserts. Provide a connector attenuation of .20 dB and a reflectance of < -40 dB SPC/<-55 dB UPC. Use heat-cured epoxy material.

Provide length markings in sequential feet and within one percent of actual cable length. Ensure character height of markings is approximately 0.10".

Provide all mounting hardware, brackets and fasteners required to securely mount the patch panel to the face of the rack rail in accordance with the manufacturer’s instructions.

Furnish SMFO jumpers that are a minimum of 3 feet in length with factory-assembled ST/PC connectors on one end and LC/PC connectors on the other end for connecting Ethernet edge switches to the fiber-optic patch panels on the drop cable assemblies. Furnish the LC/PC connectors in a molded snap plug assembly labeled “A” and “B” and designed to insert both connectors simultaneously. Furnish each pair of jumpers with uniquely colored strain relief boots (i.e., blue and white) such that the boot color on the ST/PC end matches the boot color on the LC/PC end. In the molded snap plug assembly, install the jumper with the blue strain relief boot on the “A” side and the jumper with white strain relief boot on the “B” side.

Ensure SMFO jumpers meet the operating characteristics of the SMFO cable with which they are to be coupled.

B. Communications Cable Identification Markers:

Furnish yellow communications cable identification markers that are resistant to fading when exposed to UV sources and changes in weather. Use markers designed to coil around fiber-optic cable that do not slide or move along the surface of the cable once installed. Ensure exposure to UV light and weather does not affect the markers natural coiling effect or deteriorate performance. Provide communications cable wraps that permit writing with an indelible marking pen and contain the following text in black:

WARNING
CITY OF RALEIGH FIBER-OPTIC CABLE
CONTACT TELEPHONE NUMBER:
(919) 996-3020

WARNING
CITY OF RALEIGH FIBER-OPTIC CABLE

Figure 2-1. Communication Cable Identification Marker.
Overall Marker Dimensions: 7"(l) x 4"(w)
Lettering Height: 3/8"for WARNING, 1/4" for all other lettering

Submit a sample of proposed communications cable identification markers to the Engineer for approval before installation.

7.3. CONSTRUCTION METHODS

A. General:

Provide cable manufacturer's attenuation and Optical Time Domain Reflectometer (OTDR) testing data for each reel of cable upon request.

Install SMFO communications cable, communications cable identification markers, lashing wire and all necessary hardware.

Comply with manufacturer's recommendations. Install communications cable on signal poles, utility poles, messenger cable and in conduits as required to bring the fiber-optic cable into and, if necessary, out of each splice enclosure.

Take all precautions necessary to ensure cable is not damaged during storage, handling and installation. Do not violate minimum bending radius of 20 times the radius of cable diameter or manufacturer's recommendation, whichever is greater. Do not step on cable nor run over cable with vehicles or equipment. Do not pull cable over or around obstructions or along the ground.

Determine lengths of cable necessary to reach from termination-point to termination point. Install cable in continuous lengths between approved splicing facilities. Additionally, provide a

sufficient amount of slack cable to allow for an additional 20 ft. of cable to be present after removal of outer sheath for termination. Measure slack cable by extending cable straight out of cabinet door or junction box.

Keep cable ends sealed at all times during installation to effectively prevent the ingress of moisture. Use approved heat shrink cable end cap. Do not use tape to seal cable ends.

Before installing cable, provide 3 copies of cable manufacturer's recommended and maximum pulling tension. Do not exceed manufacturer's recommended pulling tension. Use pulling grips containing a rotating swivel. Coil cable in a figure-8 configuration whenever cable is unreeled for subsequent pulling.

Install fiber-optic cable in separate 2" risers with heat shrink tubing or conduits. Do not share risers or conduits containing fiber-optic cable with other type cable.

B. Aerial Installation:

Double lash fiber-optic cable to messenger cable with one 360° spiral per foot.

Use pole attachment hardware and roller guides with safety clips to install aerial run cable.

Maintain tension during the pulling process for aerial run cable by using an approved mechanical clutch (dynamometer) device. Do not allow cable to contact the ground or other obstructions between poles during installation. Do not use a motorized vehicle to generate cable pulling forces.

Use a cable suspension clamp when attaching cable tangent to a pole. Select and place cable blocks and corner blocks so as not to exceed the cable's minimum bending radius. Do not pull cable across J-hooks.

Store 100 ft. of each fiber-optic cable on all cable runs that are continuous without splices where specified. Obtain approval for spare cable storage locations. Store spare fiber optic cable on fiber-optic cable storage racks (snow shoes). Locate spare cable storage in the middle of spans between termination points. Do not store spare fiber-optic cable over the roadway or driveways.

Install one communications cable identification marker within 36" of pole attachment points and at locations where more than one cable originates or terminates.

C. Underground Installation:

Install fiber-optic cable underground in conduit using cable pulling lubricants recommended by the fiber-optic cable manufacturer.

Obtain approval of cable pulling lubricant and method of pulling before installing underground fiber-optic cable.

Use a dynamometer (clutch device) so as not to exceed maximum allowable pulling tension if cable is pulled by mechanical means. Do not use a motorized vehicle to generate cable pulling forces.

Keep tension on cable reel and pulling line at start of each pull. Do not release tension if pulling operation is halted. Restart pulling operation by gradually increasing tension until cable is in motion.

For pulling cable through manholes, junction boxes and vaults, feed cable by manually rotating the reel. Do not pull cable through intermediate junction boxes, handholds or openings in conduit unless otherwise approved.

Install communications cable identification markers on each communications cable entering a junction box.

D. Installation of Drop Cable:

Determine length of drop cable needed, including slack, to reach from cabinet mounting point to termination point.

At aerial splice enclosures, store 50 ft. of slack cable on cable storage racks. At below ground splice enclosures, coil 30 ft. of slack cable in manhole or junction box where enclosure is located.

Mount the patch panel of the drop cable assembly vertically to the surface of the rack frame with screws, mounting brackets and hardware provided with the drop cable assembly. Mount the patch panel in a location convenient to the Ethernet switch to facilitate installation of 3-foot SMFO jumpers between them. Mount the patch panel with the ST connectors in a downward pointing orientation. Do not use cable ties or cable management hardware on the drop cable within the cabinet. Instead, leave 15' of drop cable loosely coiled in the cabinet bottom.

Install SMFO jumpers between the appropriate connectors on the patch panel of the drop cable assembly and the Ethernet edge switch.

Label all connectors, pigtails, and the connector panel. At the aerial splice enclosure location, cap off all unused fibers and label to correspond with the connector panel.

Where the Plans call for a fiber-optic drop cable to be installed in an existing riser with existing fiber-optic cable, remove heat shrink tubing. Install the new fiber-optic drop cable assembly in the existing riser and install new heat shrink tubing at the top of the existing riser using a heat shrink tubing retrofit kit. Once splicing has been completed, permanently store all remaining spare cable on fiber-optic cable storage racks.

7.4. MEASURMENT AND PAYMENT

Pre-terminated Fiber Optic Drop Cable will be measured and paid as the actual number of new drop cable assemblies furnished, installed and accepted.

No measurement will be made for terminating, splicing and testing fiber-optic cable, or for communications cable identification markers, as these will be incidental to the installation of fiber-optic cable.

No measurement will be made for terminating, splicing and testing new fiber optic cable or drop cable assemblies, for fiber-optic jumpers, or communications cable identification markers, as these will be incidental to the installation of drop cable assemblies.

Payment will be made under:

Pay Item	Pay Unit
Pre-terminated Fiber Optic Drop Cable	Each

DBE LISTING FORM

Firm Name and Address	Item No.	Item Description	* Agreed upon Unit Price	** Dollar Volume of Item
Name Address				
Name Address				
Name Address				
Name Address				
Name Address				
Name Address				
Name Address				

***** The Dollar Volume shown in this column shall be the Actual Price Agreed Upon by the Prime Contractor and the DBE subcontractor, and these prices will be used to determine the percentage of the DBE participation in the contract.
** Dollar Volume of DBE Subcontractor Percentage of Total Contract Bid Price:
If firm is a Material Supplier Only, show Dollar Volume as 60% of Agreed Upon Amount from Letter of Intent.
If firm is a Manufacturer, show Dollar Volume as 100% of Agreed Upon Amount from Letter of Intent.

Firm Name and Address	Item No.	Item Description	* Agreed upon Unit Price	** Dollar Volume of Item
Name Address				
Name Address				
Name Address				
Name Address				
Name Address				
Name Address				

***** The Dollar Volume shown in this column shall be the Actual Price Agreed Upon by the Prime Contractor and the DBE subcontractor, and these prices will be used to determine the percentage of the DBE participation in the contract.

**** Dollar Volume of DBE Subcontractor $_____**

Percentage of Total Contract Bid Price _____%

** Dollar Volume of DBE Subcontractor Percentage of Total Contract Bid Price:

If firm is a Material Supplier Only, show Dollar Volume as 60% of Agreed Upon Amount from Letter of Intent.

If firm is a Manufacturer, show Dollar Volume as 100% of Agreed Upon Amount from Letter of Intent.

ADDENDUM(S)

ADDENDUM #1

I, _____ representing _____
(SIGNATURE)

Acknowledge receipt of Addendum #1.

ADDENDUM #2

I, _____ representing _____
(SIGNATURE)

Acknowledge receipt of Addendum #2.

ADDENDUM #3

I, _____ representing _____
(SIGNATURE)

Acknowledge receipt of Addendum #3.

AWARD LIMITS ON MULTIPLE PROJECTS

It is the desire of the Proposer to be awarded contracts, the value of which will not exceed a total of $_____, for those projects indicated below on which bids are being opened on the same date as shown in the Proposal Form. Individual projects shall be indicated by placing the project number and county in the appropriate place below. Projects not selected will not be subject to an award limit.

_____	_____
(Project Number)	(County)
_____	_____
(Project Number)	(County)
_____	_____
(Project Number)	(County)
_____	_____
(Project Number)	(County)

*If a Proposer desires to limit the total amount of work awarded to him in this letting, he shall state such limit in the space provided above in the second line of this form.

It is agreed that in the event that I am (we are) the successful bidder on indicated projects, the total value of which is more that the above stipulated award limits, the Board of Transportation will award me (us) projects from among those indicated which have a total value not exceeding the award limit and which will result in the best advantage to the Department of Transportation.

_____
**Signature of Authorized Person

**Only those persons authorized to sign bids under the provisions of Article 102-8, Item 7, shall be authorized to sign this form.

EXECUTION OF BID

NON-COLLUSION, DEBARMENT AND GIFT BAN CERTIFICATION

CORPORATION

The prequalified bidder being duly sworn, solemnly swears (or affirms) that neither he, nor any official, agent or employee has entered into any agreement, participated in any collusion, or otherwise taken any action which is in restraint of free competitive bidding in connection with any bid or contract, that the prequalified bidder has not been convicted of violating *N.C.G.S. §133-24* within the last three years, and that the prequalified bidder intends to do the work with his own bona fide employees or subcontractors and will not bid for the benefit of another contractor.

By submitting this non-collusion, debarment and gift ban certification, the Contractor is attesting his status under penalty of perjury under the laws of the United States in accordance with the Debarment Certification attached, provided that the Debarment Certification also includes any required statements concerning exceptions that are applicable.

N.C.G.S. §133-32 and Executive Order 24 prohibit the offer to, or acceptance by, any State Employee of any gift from anyone with a contract with the State, or from any person seeking to do business with the State. By execution of any response in this procurement, you attest, for your entire organization and its employees or agents, that you are not aware that any such gift has been offered, accepted, or promised by any employees of your organization.

SIGNATURE OF PREQUALIFIED BIDDER

_____
Full name of Corporation

_____
Address as Prequalified

Attest _____ By _____

Secretary/Assistant Secretary	President/Vice President/Assistant Vice President
(Select appropriate title)	*(Select appropriate title)*
Print or type Signer's name	Print or type Signer's name

CORPORATE SEAL

NON-COLLUSION AFFIDAVIT, DEBARMENT CERTIFICATION AND GIFT BAN CERTIFICATION

PARTNERSHIP

The prequalified bidder, being duly sworn, solemnly swears (or affirms) that neither he, nor any official, agent or employee has entered into any agreement, participated in any collusion, or otherwise taken any action which is in restraint of free competitive bidding in connection with any bid or contract, that the prequalified bidder has not been convicted of violating *N.C.G.S. § 133-24* within the last three years, and that the prequalified bidder intends to do the work with its own bona fide employees or subcontractors and will not bid for the benefit of another contractor.

By submitting this non-collusion, debarment and gift ban certification, the Contractor is attesting his status under penalty of perjury under the laws of the United States in accordance with the Debarment Certification attached, provided that the Debarment Certification also includes any required statements concerning exceptions that are applicable.

N.C.G.S. § 133-32 and Executive Order 24 prohibit the offer to, or acceptance by, any State Employee of any gift from anyone with a contract with the State, or from any person seeking to do business with the State. By execution of any response in this procurement, you attest, for your entire organization and its employees or agents, that you are not aware that any such gift has been offered, accepted, or promised by any employees of your organization.

SIGNATURE OF PREQUALIFIED BIDDER

_____

Full Name of Partnership

_____

Address as Prequalified

Signature of Witness	Signature of Partner
Print or Type Signer's Name	Print or Type Signer's Name

NON-COLLUSION AFFIDAVIT, DEBARMENT CERTIFICATION AND GIFT BAN CERTIFICATION

LIMITED LIABILITY COMPANY

The prequalified bidder, being duly sworn, solemnly swears (or affirms) that neither he, nor any official, agent or employee has entered into any agreement, participated in any collusion, or otherwise taken any action which is in restraint of free competitive bidding in connection with any bid or contract, that the prequalified bidder has not been convicted of violating *N.C.G.S. § 133-24* within the last three years, and that the prequalified bidder intends to do the work with its own bona fide employees or subcontractors and will not bid for the benefit of another contractor.

By submitting this non-collusion, debarment and gift ban certification, the Contractor is attesting his status under penalty of perjury under the laws of the United States in accordance with the Debarment Certification attached, provided that the Debarment Certification also includes any required statements concerning exceptions that are applicable.

N.C.G.S. § 133-32 and Executive Order 24 prohibit the offer to, or acceptance by, any State Employee of any gift from anyone with a contract with the State, or from any person seeking to do business with the State. By execution of any response in this procurement, you attest, for your entire organization and its employees or agents, that you are not aware that any such gift has been offered, accepted, or promised by any employees of your organization.

SIGNATURE OF PREQUALIFIED BIDDER

_____
Full Name of Firm

_____
Address as Prequalified

Signature of Witness	Signature of Member/Manager/Authorized Agent *(Select appropriate Title)*
Print or Type Signer's Name	Print or Type Signer's Name

NON-COLLUSION, DEBARMENT AND GIFT BAN CERTIFICATION

JOINT VENTURE (2) or (3)

The prequalified bidder, being duly sworn, solemnly swears (or affirms) that neither he, nor any official, agent or employee has entered into any agreement, participated in any collusion, or otherwise taken any action which is in restraint of free competitive bidding in connection with any bid or contract, that the prequalified bidder has not been convicted of violating *N.C.G.S. § 133-24* within the last three years, and that the prequalified bidder intends to do the work with its own bona fide employees or subcontractors and will not bid for the benefit of another contractor.

By submitting this non-collusion, debarment and gift ban certification, the Contractor is attesting his status under penalty of perjury under the laws of the United States in accordance with the Debarment Certification attached, provided that the Debarment Certification also includes any required statements concerning exceptions that are applicable.

N.C.G.S. § 133-32 and Executive Order 24 prohibit the offer to, or acceptance by, any State Employee of any gift from anyone with a contract with the State, or from any person seeking to do business with the State. By execution of any response in this procurement, you attest, for your entire organization and its employees or agents, that you are not aware that any such gift has been offered, accepted, or promised by any employees of your organization.

SIGNATURE OF PREQUALIFIED BIDDER

Instructions: **2 Joint Venturers** Fill in lines (1), (2) and (3) and execute. **3 Joint Venturers** Fill in lines (1), (2), (3) and (4) and execute. On Line (1), fill in the name of the Joint Venture Company. On Line (2), fill in the name of one of the joint venturers and execute below in the appropriate manner. On Line (3), print or type the name of the other joint venturer and execute below in the appropriate manner. On Line (4), fill in the name of the third joint venturer, if applicable and execute below in the appropriate manner.

(1) _____
Name of Joint Venture

(2) _____
Name of Contractor

_____
Address as Prequalified

_____ BY _____
Signature of Witness or Attest Signature of Contractor

_____ _____
Print or Type Signer's Name Print or Type Signer's Name

If Corporation, affix Corporate Seal AND

(3) _____
Name of Contractor

_____
Address as Prequalified

_____ BY _____
Signature of Witness or Attest Signature of Contractor

_____ _____
Print or Type Signer's Name Print or Type Signer's Name

If Corporation, affix Corporate Seal AND

(4) _____
Name of Contractor

_____
Address as Prequalified

_____ BY _____
Signature of Witness or Attest Signature of Contractor

_____ _____
Print or Type Signer's Name Print or Type Signer's Name

If Corporation, affix Corporate Seal

NON-COLLUSION AFFIDAVIT, DEBARMENT CERTIFICATION AND GIFT BAN CERTIFICATION

INDIVIDUAL DOING BUSINESS UNDER A FIRM NAME

The prequalified bidder, being duly sworn, solemnly swears (or affirms) that neither he, nor any official, agent or employee has entered into any agreement, participated in any collusion, or otherwise taken any action which is in restraint of free competitive bidding in connection with any bid or contract, that the prequalified bidder has not been convicted of violating *N.C.G.S. § 133-24* within the last three years, and that the prequalified bidder intends to do the work with its own bona fide employees or subcontractors and will not bid for the benefit of another contractor.

By submitting this non-collusion, debarment and gift ban certification, the Contractor is attesting his status under penalty of perjury under the laws of the United States in accordance with the Debarment Certification attached, provided that the Debarment Certification also includes any required statements concerning exceptions that are applicable.

N.C.G.S. § 133-32 and Executive Order 24 prohibit the offer to, or acceptance by, any State Employee of any gift from anyone with a contract with the State, or from any person seeking to do business with the State. By execution of any response in this procurement, you attest, for your entire organization and its employees or agents, that you are not aware that any such gift has been offered, accepted, or promised by any employees of your organization.

SIGNATURE OF PREQUALIFIED BIDDER

Name of Prequalified Bidder _____

Individual Name

Trading and Doing Business As _____

Full name of Firm

_____

Address as Prequalified

_____ _____

Signature of Witness Signature of Prequalified Bidder, Individual

_____ _____

Print or Type Signer's Name Print or Type Signer's Name

NON-COLLUSION AFFIDAVIT, DEBARMENT CERTIFICATION AND GIFT BAN CERTIFICATION

INDIVIDUAL DOING BUSINESS IN HIS OWN NAME

The prequalified bidder, being duly sworn, solemnly swears (or affirms) that neither he, nor any official, agent or employee has entered into any agreement, participated in any collusion, or otherwise taken any action which is in restraint of free competitive bidding in connection with any bid or contract, that the prequalified bidder has not been convicted of violating *N.C.G.S. § 133-24* within the last three years, and that the prequalified bidder intends to do the work with its own bona fide employees or subcontractors and will not bid for the benefit of another contractor.

By submitting this non-collusion, debarment and gift ban certification, the Contractor is attesting his status under penalty of perjury under the laws of the United States in accordance with the Debarment Certification attached, provided that the Debarment Certification also includes any required statements concerning exceptions that are applicable.

N.C.G.S. § 133-32 and Executive Order 24 prohibit the offer to, or acceptance by, any State Employee of any gift from anyone with a contract with the State, or from any person seeking to do business with the State. By execution of any response in this procurement, you attest, for your entire organization and its employees or agents, that you are not aware that any such gift has been offered, accepted, or promised by any employees of your organization.

SIGNATURE OF PREQUALIFIED BIDDER

Name of Prequalified Bidder _____

Print or Type Name

_____

Address as Prequalified

_____

Signature of Prequalified Bidder, Individually

_____

Print or type Signer's Name

_____

Signature of Witness

_____

Print or type Signer’s name

DEBARMENT CERTIFICATION OF PREQUALIFIED BIDDER

Conditions for certification:

1. The prequalified bidder shall provide immediate written notice to the Department if at any time the bidder learns that his certification was erroneous when he submitted his debarment certification or explanation that is file with the Department, or has become erroneous because of changed circumstances.

2. The terms *covered transaction*, *debarred*, *suspended*, *ineligible*, *lower tier covered transaction*, *participant*, *person*, *primary covered transaction*, *principal*, *proposal*, and *voluntarily excluded*, as used in this provision, have the meanings set out in the Definitions and Coverage sections of the rules implementing Executive Order 12549. A copy of the Federal Rules requiring this certification and detailing the definitions and coverages may be obtained from the Contract Officer of the Department.

3. The prequalified bidder agrees by submitting this form, that he will not knowingly enter into any lower tier covered transaction with a person who is debarred, suspended, declared ineligible, or voluntarily excluded from participation in NCDOT contracts, unless authorized by the Department.

4. For Federal Aid projects, the prequalified bidder further agrees that by submitting this form he will include the Federal-Aid Provision titled *Required Contract Provisions Federal-Aid Construction Contract (Form FHWA PR 1273*) provided by the Department, without subsequent modification, in all lower tier covered transactions.

5. The prequalified bidder may rely upon a certification of a participant in a lower tier covered transaction that he is not debarred, suspended, ineligible, or voluntarily excluded from the covered transaction, unless he knows that the certification is erroneous. The bidder may decide the method and frequency by which he will determine the eligibility of his subcontractors.

6. Nothing contained in the foregoing shall be construed to require establishment of a system of records in order to render in good faith the certification required by this provision. The knowledge and information of a participant is not required to exceed that which is normally possessed by a prudent person in the ordinary course of business dealings.

7. Except as authorized in paragraph 6 herein, the Department may terminate any contract if the bidder knowingly enters into a lower tier covered transaction with a person who is suspended, debarred, ineligible, or voluntarily excluded from participation in this transaction, in addition to other remedies available by the Federal Government.

DEBARMENT CERTIFICATION

The prequalified bidder certifies to the best of his knowledge and belief, that he and his principals:

a. Are not presently debarred, suspended, proposed for debarment, declared ineligible, or voluntarily excluded from covered transactions by any Federal department or agency;

b. Have not within a three-year period preceding this proposal been convicted of or had a civil judgment rendered against them for commission of fraud or a criminal offense in connection with obtaining, attempting to obtain, or performing a public (Federal, State or local) transaction or contract under a public transaction; violation of Federal or State antitrust statutes or commission of embezzlement, theft, forgery, bribery, falsification or destruction of records; making false statements; or receiving stolen property;

c. Are not presently indicted for or otherwise criminally or civilly charged by a governmental entity (Federal, State or local) with commission of any of the offenses enumerated in paragraph b. of this certification; and

d. Have not within a three-year period preceding this proposal had one or more public transactions (Federal, State or local) terminated for cause or default.

e. Will submit a revised Debarment Certification immediately if his status changes and will show in his bid proposal an explanation for the change in status.

If the prequalified bidder cannot certify that he is not debarred, he shall provide an explanation with this submittal. An explanation will not necessarily result in denial of participation in a contract.

Failure to submit a non-collusion affidavit and debarment certification will result in the prequalified bidder's bid being considered non-responsive.

☐ Check here if an explanation is attached to this certification.

County : Wake

Line #	Item Number	Sec #	Description	Quantity	Unit Cost	Amount
			ROADWAY ITEMS			
0001	0000100000-N	800	MOBILIZATION	Lump Sum	L.S.	
0002	4457000000-N	SP	TEMPORARY TRAFFIC CONTROL	Lump Sum	L.S.	
0003	4710000000-E	1205	THERMOPLASTIC PAVEMENT MARKING LINES (24", 120 MILS)	1,235 LF		
0004	4850000000-E	1205	REMOVAL OF PAVEMENT MARKING LINES (4")	100 LF		
0005	7048500000-E	1705	PEDESTRIAN SIGNAL HEAD (16", 1 SECTION W/COUNTDOWN)	6 EA		
0006	7060000000-E	1705	SIGNAL CABLE	3,300 LF		
0007	7120000000-E	1705	VEHICLE SIGNAL HEAD (12", 3 SECTION)	9 EA		
0008	7132000000-E	1705	VEHICLE SIGNAL HEAD (12", 4 SECTION)	1 EA		
0009	7264000000-E	1710	MESSENGER CABLE (3/8")	450 LF		
0010	7279000000-E	1715	TRACER WIRE	50 LF		
0011	7288000000-E	1715	PAVED TRENCHING (**********) (1 CONDUIT, 2 INCH)	50 LF		
0012	7300000000-E	1715	UNPAVED TRENCHING (**********) (1 CONDUIT, 2 INCH)	750 LF		
0013	7301000000-E	1715	DIRECTIONAL DRILL (**********) (1 CONDUIT, 2 INCH)	100 LF		
0014	7324000000-N	1716	JUNCTION BOX (STANDARD SIZE)	9 EA		
0015	7444000000-E	1725	INDUCTIVE LOOP SAWCUT	400 LF		
0016	7456000000-E	1726	LEAD-IN CABLE (**********) (14-2)	4,000 LF		
0017	7540000000-N	1731	SPLICE ENCLOSURE	1 EA		
0018	7576000000-N	SP	METAL STRAIN SIGNAL POLE	4 EA		

County : Wake

Line #	Item Number	Sec #	Description	Quantity	Unit Cost	Amount
0019	7613000000-N	SP	SOIL TEST	4 EA		
0020	7614100000-E	SP	DRILLED PIER FOUNDATION	16 CY		
0021	7636000000-N	1745	SIGN FOR SIGNALS	4 EA		
0022	7642200000-N	1743	TYPE II PEDESTAL WITH FOUND-ATION	4 EA		
0023	7684000000-N	1750	SIGNAL CABINET FOUNDATION	1 EA		
0024	7756000000-N	1751	CONTROLLER WITH CABINET (TYPE 2070L, BASE MOUNTED)	1 EA		
0025	7780000000-N	1751	DETECTOR CARD (TYPE 2070L)	4 EA		
0026	7901000000-N	1753	CABINET BASE EXTENDER	1 EA		
0027	7980000000-N	SP	GENERIC SIGNAL ITEM ETHERNET EDGE SWITCH	1 EA		
0028	7980000000-N	SP	GENERIC SIGNAL ITEM POWDER COAT FOR SIGNAL PEDESTA L	4 EA		
0029	7980000000-N	SP	GENERIC SIGNAL ITEM POWDER COAT FOR STRAIN POLE	4 EA		
0030	7980000000-N	SP	GENERIC SIGNAL ITEM PRE-TERMINATED FIBER OPTIC DROP CABLE	1 EA		