**This electronic collection of documents is provided for the convenience of the user and is Not a Certified Document –**

**The documents contained herein were originally issued and sealed by the individuals whose names and license numbers appear on each page, on the dates appearing with their signature on that page.**
**This file or an individual page shall not be considered a certified document.**

PROJECT: 17BP.5.R.50

CONTRACT: DE00152

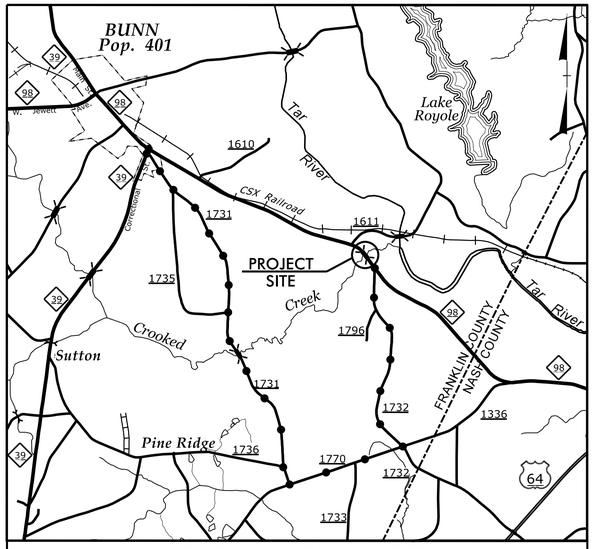


VICINITY MAP FOR 17BP.5.R.50

OFFSITE DETOUR ROUTE

See Sheet 1A For Index of Sheets
See Sheet 1B For Conventional Symbols

STATE OF NORTH CAROLINA
DIVISION OF HIGHWAYS

# FRANKLIN COUNTY

| STATE | STATE PROJECT REFERENCE NO. | SHEET NO. | TOTAL SHEETS |
|---|---|---|---|
| N.C. | 17BP.5.R.50 | 1 | |

| STATE PROJ. NO. | F.A. PROJ. NO. | DESCRIPTION |
|---|---|---|
| 17BP.5.R.50 | N/A | PE |
| 17BP.5.R.50 | N/A | ROW & UTL |
| 17BP.5.R.50 | N/A | CONSTRUCTION |
| | | |

**LOCATION: BRIDGE NO. 26 OVER CROOKED CREEK ON NC 98**

**TYPE OF WORK: GRADING, DRAINAGE, PAVING, AND STRUCTURE**

NAD 83/NA 2011

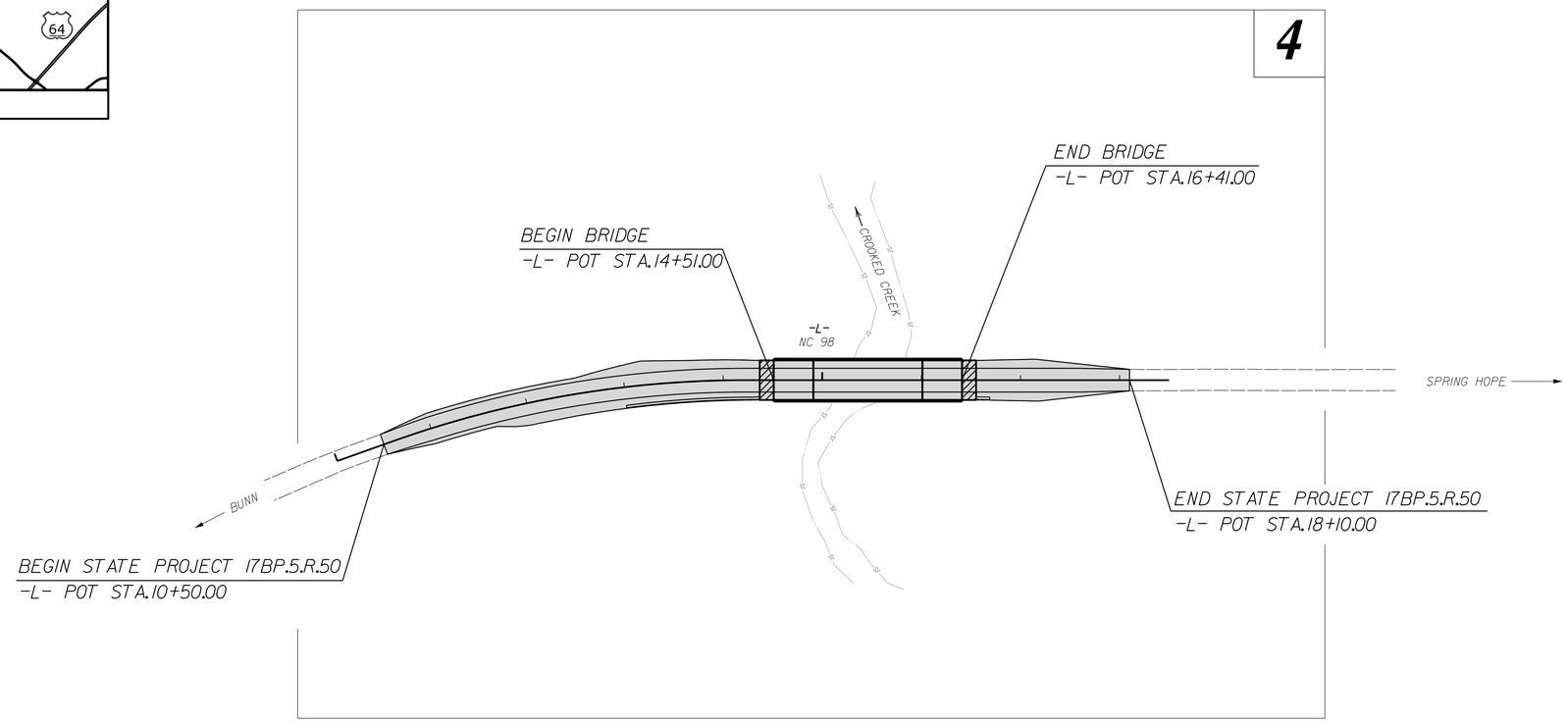


**DOCUMENT NOT CONSIDERED FINAL UNLESS ALL SIGNATURES COMPLETED**

## GRAPHIC SCALES

50 25 0 50 100
PLANS

50 25 0 50 100
PROFILE (HORIZONTAL)

10 5 0 10 20
PROFILE (VERTICAL)

## DESIGN DATA

ADT = 2200
V = 55 MPH
CLASS = MINOR ARTERIAL

REGIONAL TIER

## PROJECT LENGTH

| | | |
|---|---|---|
| LENGTH ROADWAY STATE PROJECT 17BP.5.R.50 | = | 0.108 mi. |
| LENGTH STRUCTURES STATE PROJECT 17BP.5.R.50 | = | 0.036 mi. |
| TOTAL LENGTH STATE PROJECT 17BP.5.R.50 | = | 0.144 mi. |

*Prepared in the Offices of:*

STEWART
421 FAYETTEVILLE ST, STE 400
RALEIGH, NC 27601
T 919.380.8750

NC FIRM LICENSE No: F-1148
1151 SE Cary Parkway, Suite 101
Cary, NC 27511
(919) 557-2929
Firm License #: C-1051
www.ecoengr@nc.com
PROJECT # IH14017
ECOLOGICAL ENGINEERING

*2012 STANDARD SPECIFICATIONS*

*RIGHT OF WAY DATE:*
MAY 18, 2015

*RIGHT OF WAY COMPLETE:*
AUGUST 5, 2016

*LETTING DATE:*
APRIL 26, 2017

ANDY YOUNG, PE
*PROJECT ENGINEER*

MICHAEL BURNS, EI
*PROJECT DESIGN ENGINEER*

LISA GILCHRIST, EI
*NCDOT CONTACT*

*HYDRAULICS ENGINEER*

DocuSigned by: Brandon Barham
C7B91A5F6F0D400...
2/14/2017
P.E.
*SIGNATURE:*

NORTH CAROLINA PROFESSIONAL SEAL 039102 ENGINEER BRANDON T. BARHAM

*ROADWAY DESIGN ENGINEER*

DocuSigned by: Andrew P. Young
EF21D93D0B2F4EF...
2/14/2017
P.E.
*SIGNATURE:*

NORTH CAROLINA PROFESSIONAL SEAL 034407 ENGINEER ANDREW P. YOUNG

STATE OF NORTH CAROLINA DEPARTMENT OF TRANSPORTATION

09/08/99

2/13/2017
:\Proj\340026_RDY_tsh.dgn
USER:Keys

| PROJECT REFERENCE NO. | SHEET NO. |
|---|---|
| 17BP.5.R.50 | 1A |

ROADWAY DESIGN ENGINEER

NORTH CAROLINA PROFESSIONAL SEAL 034407 ENGINEER ANDREW P. YOUNG

DocuSigned by: Andrew P. Young 2/14/2017
EF21D92DD62F4EF...

Firm License No. C-1051
421 Fayetteville St.
Suite 400
Raleigh, NC 27601
T: 919.366.8759
www.stewartinc.com
STEWART

**DOCUMENT NOT CONSIDERED FINAL UNLESS ALL SIGNATURES COMPLETED**

STATE OF NORTH CAROLINA
DIVISION OF HIGHWAYS

# *INDEX OF SHEETS, GENERAL NOTES, AND LIST OF STANDARD DRAWINGS*

INDEX OF SHEETS

| SHEET NUMBER | SHEET |
|---|---|
| 1 | TITLE SHEET |
| 1A | INDEX OF SHEETS, GENERAL NOTES, AND LIST OF STANDARD DRAWINGS |
| 1B | CONVENTIONAL SYMBOLS |
| 1C-1 | SURVEY CONTROL DATA SHEET |
| 2A-1 | PAVEMENT SCHEDULE, TYPICAL SECTIONS, AND WEDGING DETAILS |
| 2C-1 | GUARDRAIL ANCHOR UNIT DETAIL |
| 3B-1 | ROADWAY SUMMARY |
| 3D-1 | DRAINAGE SUMMARY |
| 4 | PLAN SHEET |
| 5 | PROFILE SHEET |
| TMP-1 THRU TMP-3 | TRAFFIC CONTROL PLANS |
| PMP-1 | PAVEMENT MARKING PLANS |
| EC-1 THRU EC-5 | EROSION CONTROL PLANS |
| RF-1 | REFORESTATION PLANS |
| UO-1 THRU UO-2 | UTILITIES BY OTHERS PLANS |
| X-1A | CROSS-SECTION SUMMARY SHEET |
| X-1 THRU X-6 | CROSS-SECTIONS |
| S-1 THRU S-35 | STRUCTURE PLANS |

EFF. 01-17-2012
REV. 02-29-2016

2012 ROADWAY ENGLISH STANDARD DRAWINGS

The following Roadway Standards as appear in "Roadway Standard Drawings" Highway Design Branch - N. C. Department of Transportation - Raleigh, N. C., Dated January, 2012 are applicable to this project and by reference hereby are considered a part of these plans:

| STD.NO. | TITLE |
|---|---|
| DIVISION 2 - EARTHWORK | |
| 200.03 | Method of Clearing - Method III |
| 225.02 | Guide for Grading Subgrade - Secondary and Local |
| 225.04 | Method of Obtaining Superelevation - Two Lane Pavement |
| DIVISION 3 - PIPE CULVERTS | |
| 300.01 | Method of Pipe Installation |
| DIVISION 4 - MAJOR STRUCTURES | |
| 422.10 | Reinforced Bridge Approach Fills |
| DIVISION 5 - SUBGRADE, BASES AND SHOULDERS | |
| 560.01 | Method of Shoulder Construction - High Side of Superelevated Curve - Method I |
| DIVISION 8 - INCIDENTALS | |
| 806.01 | Concrete Right-of-Way Marker |
| 806.02 | Granite Right-of-Way Marker |
| 840.00 | Concrete Base Pad for Drainage Structures |
| 840.25 | Anchorage for Frames - Brick or Concrete or Precast |
| 840.29 | Frames and Narrow Slot Flat Grates |
| 840.35 | Traffic Bearing Grated Drop Inlet - for Cast Iron Double Frame and Grates |
| 840.46 | Traffic Bearing Precast Drainage Structure |
| 846.01 | Concrete Curb, Gutter and Curb & Gutter |
| 846.04 | Drop Inlet Installation in Shoulder Berm Gutter |
| 862.01 | Guardrail Placement |
| 862.02 | Guardrail Installation |
| 876.02 | Guide for Rip Rap at Pipe Outlets |
| 876.04 | Drainage Ditches With Class 'B' Rip Rap |

GENERAL NOTES:

2012 SPECIFICATIONS
EFFECTIVE: 01-17-2012
REVISED: 10-31-2014

GRADE LINE:
GRADING AND SURFACING:

THE GRADE LINES SHOWN DENOTE THE FINISHED ELEVATION OF THE PROPOSED SURFACING AT GRADE POINTS SHOWN ON THE TYPICAL SECTIONS. GRADE LINES MAY BE ADJUSTED AT THEIR BEGINNING AND ENDING AND AT STRUCTURES AS DIRECTED BY THE ENGINEER IN ORDER TO SECURE A PROPER TIE-IN.

CLEARING:

CLEARING ON THIS PROJECT SHALL BE PERFORMED TO THE LIMITS ESTABLISHED BY METHOD III.

SUPERELEVATION:

ALL CURVES ON THIS PROJECT SHALL BE SUPERELEVATED IN ACCORDANCE WITH STD. NO. 225.04 USING THE RATE OF SUPERELEVATION AND RUNOFF SHOWN ON THE PLANS. SUPERELEVATION IS TO BE REVOLVED ABOUT THE GRADE POINTS SHOWN ON THE TYPICAL SECTIONS.

SHOULDER CONSTRUCTION:

ASPHALT, EARTH, AND CONCRETE SHOULDER CONSTRUCTION ON THE HIGH SIDE OFSUPERELEVATED CURVES SHALL BE IN ACCORDANCE WITH STD. NO. 560.01

GUARDRAIL:

THE GUARDRAIL LOCATIONS SHOWN ON THE PLANS MAY BE ADJUSTED DURING CONSTRUCTION AS DIRECTED BY THE ENGINEER. THE CONTRACTOR SHOULD CONSULTWITH THE ENGINEER PRIOR TO ORDERING GUARDRAIL MATERIAL.

TEMPORARY SHORING:

SHORING REQUIRED FOR THE MAINTENANCE OF TRAFFIC WILL BE PAID FOR AS "EXTRA WORK" IN ACCORDANCE WITH SECTION 104-7.

SUBSURFACE PLANS:

NO SUBSURFACE PLANS ARE AVAILABLE ON THIS PROJECT. THE CONTRACTOR SHOULD MAKE HIS OWN INVESTIGATION AS TO THE SUBSURFACE CONDITIONS.

END BENTS:

THE ENGINEER SHALL CHECK THE STRUCTURE END BENT PLANS, DETAILS, AND CROSS-SECTION PRIOR TO SETTING OF THE SLOPE STAKES FOR THE EMBANKMENT OR EXCAVATION APPROACHING A BRIDGE.

UTILITIES:

UTILITY OWNERS ON THIS PROJECT ARE

CENTURY LINK - TELEPHONE/FIBEROPTICS

ANY RELOCATION OF EXISTING UTILITIES WILL BE ACCOMPLISHED BY OTHERS.

RIGHT-OF-WAY MARKERS:

ALL RIGHT-OF-WAY MARKERS ON THIS PROJECT SHALL BE PLACED BY CONTRACT.

8/17/99
2/13/2017
...\340026_RDY_PSH_1A.dgn
USER: PEeis

12/2/2016

| PROJECT REFERENCE NO. | SHEET NO. |
|---|---|
| 17BP.5.R.50 | 1B |

STATE OF NORTH CAROLINA, DIVISION OF HIGHWAYS

# CONVENTIONAL PLAN SHEET SYMBOLS

*Note: Not to Scale*

***S.U.E. = *Subsurface Utility Engineering***

## *BOUNDARIES AND PROPERTY:*

- State Line
- County Line
- Township Line
- City Line
- Reservation Line
- Property Line
- Existing Iron Pin — EIP
- Computed Property Corner
- Property Monument — ECM
- Parcel/Sequence Number — 123
- Existing Fence Line
- Proposed Woven Wire Fence
- Proposed Chain Link Fence
- Proposed Barbed Wire Fence
- Existing Wetland Boundary — WLB
- Proposed Wetland Boundary — WLB
- Existing Endangered Animal Boundary — EAB
- Existing Endangered Plant Boundary — EPB
- Existing Historic Property Boundary — HPB
- Known Contamination Area: Soil — S
- Potential Contamination Area: Soil — S
- Known Contamination Area: Water — W
- Potential Contamination Area: Water — W
- Contaminated Site: Known or Potential

## *BUILDINGS AND OTHER CULTURE:*

- Gas Pump Vent or U/G Tank Cap
- Sign — S
- Well — W
- Small Mine
- Foundation
- Area Outline
- Cemetery
- Building
- School
- Church
- Dam

## *HYDROLOGY:*

- Stream or Body of Water
- Hydro, Pool or Reservoir
- Jurisdictional Stream — JS
- Buffer Zone 1 — BZ 1
- Buffer Zone 2 — BZ 2
- Flow Arrow
- Disappearing Stream
- Spring
- Wetland
- Proposed Lateral, Tail, Head Ditch — FLOW
- False Sump

## *RAILROADS:*

- Standard Gauge — CSX TRANSPORTATION
- RR Signal Milepost — MILEPOST 35
- Switch — SWITCH
- RR Abandoned
- RR Dismantled

## *RIGHT OF WAY & PROJECT CONTROL:*

- Secondary Horiz and Vert Control Point
- Primary Horiz Control Point
- Primary Horiz and Vert Control Point
- Exist Permanent Easment Pin and Cap
- New Permanent Easement Pin and Cap
- Vertical Benchmark
- Existing Right of Way Marker
- Existing Right of Way Line
- New Right of Way Line — RW
- New Right of Way Line with Pin and Cap — RW
- New Right of Way Line with Concrete or Granite R/W Marker — RW
- New Control of Access Line with Concrete C/A Marker — CA
- Existing Control of Access — CA
- New Control of Access — CA
- Existing Easement Line — E
- New Temporary Construction Easement — E
- New Temporary Drainage Easement — TDE
- New Permanent Drainage Easement — PDE
- New Permanent Drainage / Utility Easement — DUE
- New Permanent Utility Easement — PUE
- New Temporary Utility Easement — TUE
- New Aerial Utility Easement — AUE

## *ROADS AND RELATED FEATURES:*

- Existing Edge of Pavement
- Existing Curb
- Proposed Slope Stakes Cut — C
- Proposed Slope Stakes Fill — F
- Proposed Curb Ramp — CR
- Existing Metal Guardrail
- Proposed Guardrail
- Existing Cable Guiderail
- Proposed Cable Guiderail
- Equality Symbol
- Pavement Removal

## *VEGETATION:*

- Single Tree
- Single Shrub
- Hedge
- Woods Line
- Orchard
- Vineyard — Vineyard

## *EXISTING STRUCTURES:*

MAJOR:

- Bridge, Tunnel or Box Culvert — CONC
- Bridge Wing Wall, Head Wall and End Wall — CONC WW

MINOR:

- Head and End Wall — CONC HW
- Pipe Culvert
- Footbridge
- Drainage Box: Catch Basin, DI or JB — CB
- Paved Ditch Gutter
- Storm Sewer Manhole — S
- Storm Sewer — S

## *UTILITIES:*

POWER:

- Existing Power Pole
- Proposed Power Pole
- Existing Joint Use Pole
- Proposed Joint Use Pole
- Power Manhole — P
- Power Line Tower
- Power Transformer
- U/G Power Cable Hand Hole
- H-Frame Pole
- U/G Power Line LOS B (S.U.E.*) — P
- U/G Power Line LOS C (S.U.E.*) — P
- U/G Power Line LOS D (S.U.E.*) — P

TELEPHONE:

- Existing Telephone Pole
- Proposed Telephone Pole
- Telephone Manhole — T
- Telephone Pedestal — T
- Telephone Cell Tower
- U/G Telephone Cable Hand Hole
- U/G Telephone Cable LOS B (S.U.E.*) — T
- U/G Telephone Cable LOS C (S.U.E.*) — T
- U/G Telephone Cable LOS D (S.U.E.*) — T
- U/G Telephone Conduit LOS B (S.U.E.*) — TC
- U/G Telephone Conduit LOS C (S.U.E.*) — TC
- U/G Telephone Conduit LOS D (S.U.E.*) — TC
- U/G Fiber Optics Cable LOS B (S.U.E.*) — T FO
- U/G Fiber Optics Cable LOS C (S.U.E.*) — T FO
- U/G Fiber Optics Cable LOS D (S.U.E.*) — T FO

WATER:

- Water Manhole — W
- Water Meter
- Water Valve
- Water Hydrant
- U/G Water Line LOS B (S.U.E*) — W
- U/G Water Line LOS C (S.U.E*) — W
- U/G Water Line LOS D (S.U.E*) — W
- Above Ground Water Line — A/G Water

TV:

- TV Pedestal — C
- TV Tower
- U/G TV Cable Hand Hole — HH
- U/G TV Cable LOS B (S.U.E.*) — TV
- U/G TV Cable LOS C (S.U.E.*) — TV
- U/G TV Cable LOS D (S.U.E.*) — TV
- U/G Fiber Optic Cable LOS B (S.U.E.*) — TV FO
- U/G Fiber Optic Cable LOS C (S.U.E.*) — TV FO
- U/G Fiber Optic Cable LOS D (S.U.E.*) — TV FO

GAS:

- Gas Valve
- Gas Meter
- U/G Gas Line LOS B (S.U.E.*) — G
- U/G Gas Line LOS C (S.U.E.*) — G
- U/G Gas Line LOS D (S.U.E.*) — G
- Above Ground Gas Line — A/G Gas

SANITARY SEWER:

- Sanitary Sewer Manhole
- Sanitary Sewer Cleanout
- U/G Sanitary Sewer Line — SS
- Above Ground Sanitary Sewer — A/G Sanitary Sewer
- SS Forced Main Line LOS B (S.U.E.*) — FSS
- SS Forced Main Line LOS C (S.U.E.*) — FSS
- SS Forced Main Line LOS D (S.U.E.*) — FSS

MISCELLANEOUS:

- Utility Pole
- Utility Pole with Base
- Utility Located Object
- Utility Traffic Signal Box — S
- Utility Unknown U/G Line LOS B (S.U.E.*) — ?UTL
- U/G Tank; Water, Gas, Oil
- Underground Storage Tank, Approx. Loc. — UST
- A/G Tank; Water, Gas, Oil
- Geoenvironmental Boring
- U/G Test Hole LOS A (S.U.E.*)
- Abandoned According to Utility Records — AATUR
- End of Information — E.O.I.

| PROJECT REFERENCE NO. | SHEET NO. |
|---|---|
| 17BP.5.R50 | 1C |
| Location and Surveys | |

# SURVEY CONTROL SHEET 34–0026

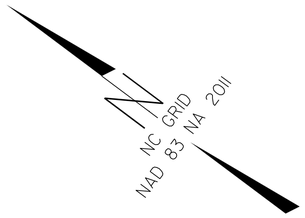


BASELINE

| POINT | DESC. | NORTH | EAST | ELEVATION | L STATION | OFFSET |
|---|---|---|---|---|---|---|
| 1 | BL1 | 797846.2200 | 2233852.0520 | 183.84 | 10+39.79 | 18.62 LT |
| 2 | BL2 | 797525.0400 | 2234175.3360 | 169.08 | 14+92.61 | 15.75 LT |
| 3 | BL3 | 797082.3310 | 2234506.1110 | 169.12 | OUTSIDE PROJECT LIMITS | |

| ALIGN | STATION | OFFSET | NORTH | EAST |
|---|---|---|---|---|
| L | 10+61.59 | 30.09 | 797793.59153 | 2233843.18661 |
| L | 10+61.59 | -70.00 | 797876.89485 | 2233898.67836 |
| L | 10+61.59 | -29.91 | 797843.53156 | 2233876.45371 |
| L | 10+85.30 | 46.66 | 797767.02781 | 2233852.72346 |
| L | 12+55.44 | 70.00 | 797646.82529 | 2233961.75047 |
| L | 14+22.99 | -70.00 | 797613.29169 | 2234177.07696 |
| L | 14+22.99 | 70.00 | 797529.43519 | 2234064.96948 |
| L | 18+00.00 | -30.00 | 797287.43214 | 2234370.86817 |
| L | 18+00.00 | -70.00 | 797311.39114 | 2234402.89888 |
| L | 18+10.00 | 70.00 | 797219.52696 | 2234296.78115 |
| L | 18+10.00 | 30.00 | 797243.48596 | 2234328.81186 |

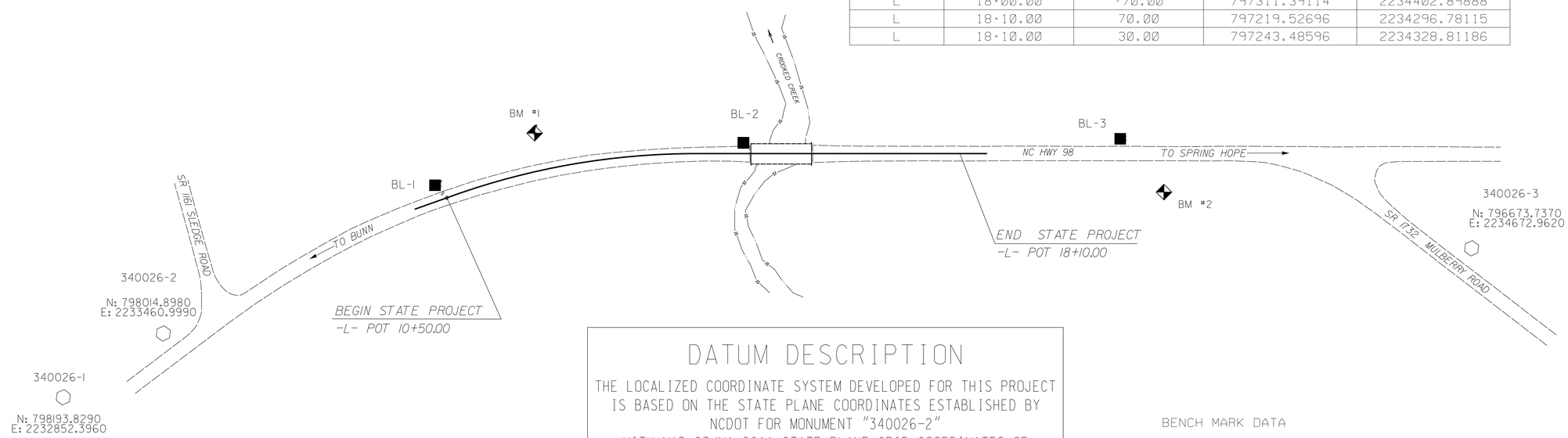


L

| TYPE | STATION | NORTH | EAST |
|---|---|---|---|
| POT | 10+00.00 | 797852.7840 | 2233808.6100 |
| PC | 10+61.59 | 797818.6372 | 2233859.8706 |
| PT | 14+22.99 | 797571.3634 | 2234121.0232 |
| POT | 18+50.00 | 797229.4245 | 2234376.7939 |

## DATUM DESCRIPTION

THE LOCALIZED COORDINATE SYSTEM DEVELOPED FOR THIS PROJECT IS BASED ON THE STATE PLANE COORDINATES ESTABLISHED BY NCDOT FOR MONUMENT "340026-2"
WITH NAD 83/NA 2011 STATE PLANE GRID COORDINATES OF
NORTHING: 798014.90(ft) EASTING: 2233461.00(ft)
ELEVATION: 196.89(ft)
THE AVERAGE COMBINED GRID FACTOR USED ON THIS PROJECT (GROUND TO GRID) IS: 0.999940804
THE N.C. LAMBERT GRID BEARING AND LOCALIZED HORIZONTAL GROUND DISTANCE FROM "340026-2" TO -L- 10+50.00 IS
S 64° 00′ 01″ E 433.05′
ALL LINEAR DIMENSIONS ARE LOCALIZED HORIZONTAL DISTANCES
VERTICAL DATUM USED IS NAVD 88

BENCH MARK DATA

BM1 ELEVATION = 178.37
N 797779 E 2234003
L STATION 11+96.00 55 LT
R/R SPIKE IN 18′ PINE

BM2 ELEVATION = 169.96
N 796988 E 2234486
L STATION 10+00.00
S 38°04′18" E DIST 1098′
R/R SPIKE IN 10" GUM

*NOTES:*

*SITE CALIBRATION INFORMATION HAS NOT BEEN PROVIDED FOR THIS PROJECT. IF FURTHER INFORMATION IS NEEDED, PLEASE CONTACT THE LOCATION AND SURVEYS UNIT.*

⬡ *INDICATES GEODETIC CONTROL MONUMENTS USED OR SET FOR HORIZONTAL PROJECT CONTROL BY THE NCDOT LOCATION AND SURVEYS UNIT.*

*PROJECT CONTROL ESTABLISHED USING GLOBAL POSITIONING SYSTEM.*

***GEOID G12NC***

***NOTE: DRAWING NOT TO SCALE***

9/20/16

2/13/2017
i:\Roadway\Proj\340026_ls_loc.dgn
$$$$USERNAME$$$$

STEWART
Firm License No. C-1561
421 Fayetteville St.
Suite 400
Raleigh, NC 27601
T 919.380.8750
www.stewartinc.com

| PROJECT REFERENCE NO. | SHEET NO. |
|---|---|
| I7BP.5.R.50 | 2A-1 |

ROADWAY DESIGN ENGINEER
NORTH CAROLINA PROFESSIONAL SEAL 034407 ENGINEER ANDREW P. YOUNG
DocuSigned by: Andrew P. Young
2/13/2017

PAVEMENT DESIGN ENGINEER
NORTH CAROLINA PROFESSIONAL SEAL 22896 ENGINEER CLARK S. MORRISON
DocuSigned by: Clark Morrison
2/14/2017

**DOCUMENT NOT CONSIDERED FINAL UNLESS ALL SIGNATURES COMPLETED**

## PAVEMENT SCHEDULE

*(FINAL PAVEMENT DESIGN)*

| | |
|---|---|
| C1 | PROP. APPROX. 1½″ ASPHALT CONCRETE SURFACE COURSE, TYPE S9.5B, AT AN AVERAGE RATE OF 168 LBS. PER SQ. YD. |
| C2 | PROP. VAR. DEPTH ASPHALT CONCRETE SURFACE COURSE, TYPE S9.5B, AT AN AVERAGE RATE OF 112 LBS. PER SQ. YD. PER 1″ DEPTH. TO BE PLACED IN LAYERS NOT TO EXCEED 2″ IN DEPTH. |
| D1 | PROP. APPROX. 3½″ ASPHALT CONCRETE INTERMEDIATE COURSE, TYPE I19.0B, AT AN AVERAGE RATE OF 399 LBS. PER SQ. YD. |
| D2 | PROP. VAR. DEPTH ASPHALT CONCRETE INTERMEDIATE COURSE, TYPE I19.0B, AT AN AVERAGE RATE OF 114 LBS. PER SQ. YD. PER 1″ DEPTH, TO BE PLACED IN LAYERS NOT LESS THAN 2½″ IN DEPTH OR GREATER THAN 4″ IN DEPTH. |
| E1 | PROP. APPROX. 5″ ASPHALT CONCRETE BASE COURSE, TYPE B25.0B, AT AN AVERAGE RATE OF 570 LBS. PER SQ. YD. |
| E2 | PROP. VAR. DEPTH ASPHALT CONCRETE BASE COURSE, TYPE B25.0B, AT AN AVERAGE RATE OF 114 LBS. PER SQ. YD. PER 1″ DEPTH. TO BE PLACED IN LAYERS NOT LESS THAN 3″ IN DEPTH OR GREATER THAN 5½″ IN DEPTH. |
| R1 | PROPOSED SHOULDER BERM GUTTER. |
| T | EARTH MATERIAL. |

NOTE: PAVEMENT EDGE SLOPES ARE 1:1 UNLESS SHOWN OTHERWISE.

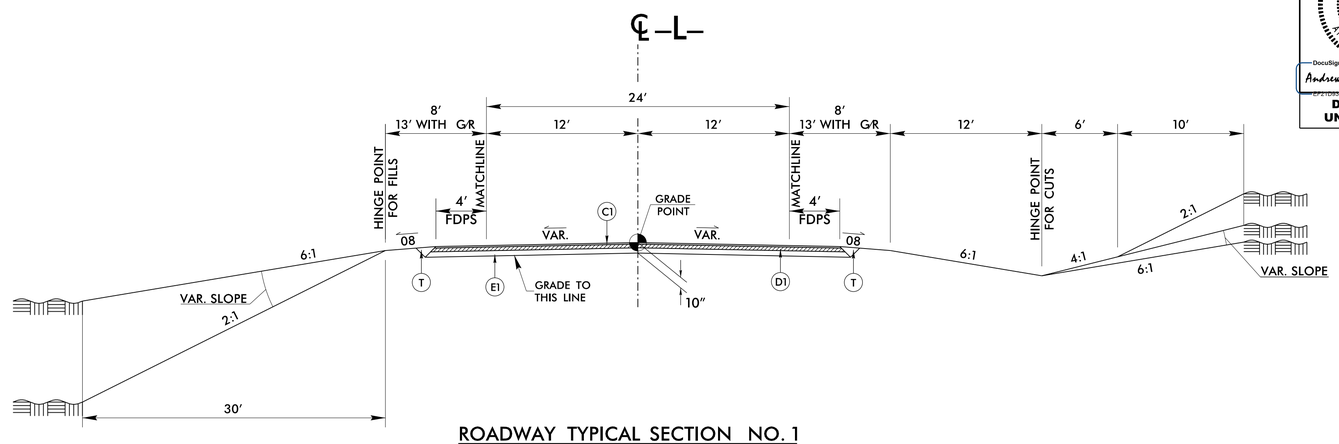


## ROADWAY TYPICAL SECTION NO. 1

–L– STA. 10+50.00 TO –L– STA. 14+51.00 (BEGIN BRIDGE)
–L– STA. 16+41.00 (END BRIDGE) TO –L– STA. 18+10.00

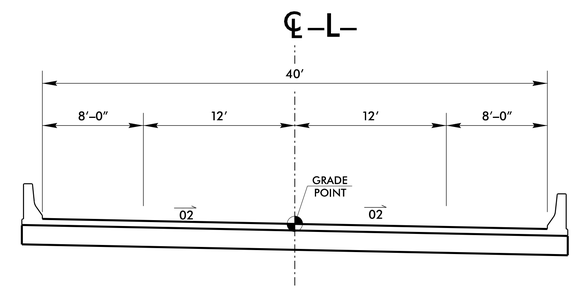


## BRIDGE TYPICAL SECTION

–L– STA. 14+51.00 TO –L– STA. 16+41.00

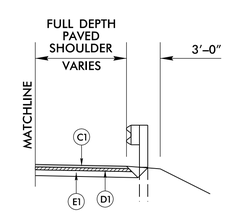


DETAIL SHOWING PAVING TO THE FACE OF GUARDRAIL

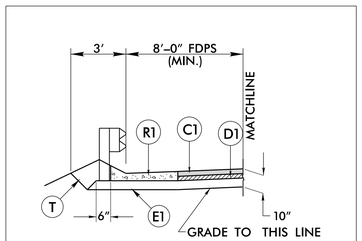


DETAIL SHOWING GUARDRAIL WITH SHOULDER BERM GUTTER

–L– STA. 13+00.00 TO –L– STA. 14+36.83 (RT)
–L– STA. 16+55.17 TO –L– STA. 16+69.00 (RT)

6/2/99
2/13/2017
I7BP.5.R.50_34A026_RDY_typ.dgn
USER: PKeys

| PROJECT REFERENCE NO. | SHEET NO. |
|---|---|
| 17BP.5.R.50 | 2C-1 |

NORTH CAROLINA PROFESSIONAL SEAL 022966 ENGINEER Paul S. Hom-Lee 2/14/2017

DocuSigned by: Jul Howerton 8F8F3D1D0D0C4F...

DOCUMENT NOT CONSIDERED FINAL UNLESS ALL SIGNATURES COMPLETED

**CONTRACT STANDARDS AND DEVELOPMENT UNIT**
Office 919-707-6950 FAX 919-250-4119

# SEE TITLE BLOCK

ORIGINAL BY: J HOWERTON DATE: 06-22-12
MODIFIED BY: DATE:
CHECKED BY: DATE:
FILE SPEC.:

STATE OF NORTH CAROLINA
DEPT. OF TRANSPORTATION
DIVISION OF HIGHWAYS
RALEIGH, N.C.

ENGLISH DETAIL DRAWING FOR
**GUARDRAIL ANCHOR UNIT**
GUARDRAIL ANCHOR UNIT TYPE B-77
FOR F-SHAPE BARRIER

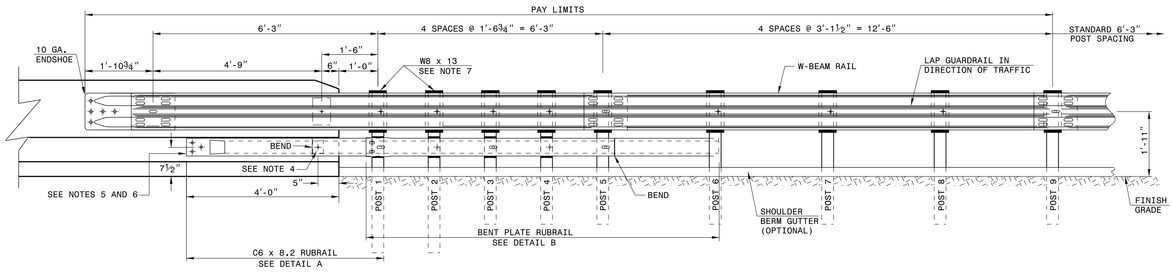


## ELEVATION

GENERAL NOTES:
1) POSTS 1 THROUGH 5 REQUIRE AN ADDITIONAL HOLE TO ATTACH LOWER BLOCKOUTS AND/OR RUBRAIL.
2) RUBRAIL BLOCKOUTS LOCATED ON POSTS 1 THROUGH 4 ARE OFFSET DRILLED AND SECURED WITH ⅝" BUTTONHEAD BOLTS (SEE CHART FOR BOLT LENGTHS). SECURE BLOCKS ONLY TO POSTS 2 AND 4. SECURE RUBRAIL AND BLOCKOUTS TO POSTS 1 AND 3. RUBRAIL IS SECURED TO POST 5 WITH A ⅝" x 4½" BUTTONHEAD BOLT. RUBRAIL IS FLARED TO BACK OF POST 6 AND NOT SECURED.
3) STEEL SPACER TUBE IS A SCHEDULE 40 GALVANIZED PIPE 6" INSIDE DIAMETER x 9" LONG. ATTACH TUBE TO GUARDRAIL ONLY WITH ⅝" x 1¼" LONG BUTTONHEAD BOLT AND RECTANGULAR PLATE WASHER.
4) SEE DETAIL D FOR SLOPED RUBRAIL BLOCKOUT. BLOCKOUT IS ATTACHED TO RAIL ELEMENT ONLY. USE ⅜" x 3" LAG BOLT WITH FLAT WASHER.
5) SHOP FABRICATE THE C6 x 8.2 RUBRAIL END TO BE CONSISTENT WITH THE SLOPE OF THE F SHAPE AND ATTACH FLUSH WITH THE SLOPED TOE OF THE BARRIER OR BRIDGE RAIL.
6) ANCHORAGE:
   (a) AT EXISTING BRIDGE RAIL AND NEW OR EXISTING BARRIERS, ANCHOR RUBRAIL USING THREE ⅝" x 6" CHEMICALLY ANCHORED BOLTS WITH WASHERS. MAXIMUM PROJECTION FOR BOLTS IS ½".
   (b) AT EXISTING BRIDGE RAIL AND NEW OR EXISTING BARRIERS, ANCHOR THE W-BEAM END SHOE USING A 4 BOLT HOLD DOWN PLATE (SEE STD. DWG. 862.04). A 4 BOLT INSERT ASSEMBLY IS ALLOWED ON PRECAST REINFORCED CONCRETE BARRIER (SEE STD. DWG. 857.01). INSTALL THE W-BEAM END SHOE BEHIND THE NESTED W-BEAM ELEMENTS.
   (c) AT NEW BRIDGE RAIL, ANCHOR THE W-BEAM END SHOE AND RUBRAIL AS DETAILED ON THE STRUCTURE PLANS.
7) POSTS 1 AND 2 ARE W8 x 13, 7'-6" LONG. ALL OTHER POSTS IN THE ANCHOR UNIT ARE W6 x 8.5.

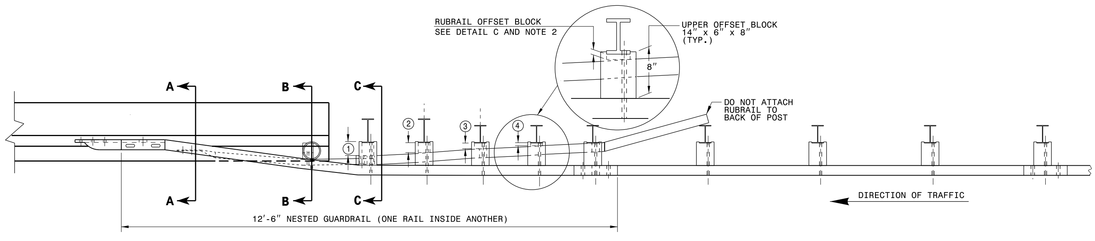


## PLAN

## GUARDRAIL ANCHOR UNIT TYPE B-77

SHEET 4 OF 7
**862D03**

STATE OF NORTH CAROLINA
DEPT. OF TRANSPORTATION
DIVISION OF HIGHWAYS
RALEIGH, N.C.

ENGLISH DETAIL DRAWING FOR
**STRUCTURE ANCHOR UNIT**
GUARDRAIL ANCHOR UNIT TYPE B-77
FOR F-SHAPE BARRIER

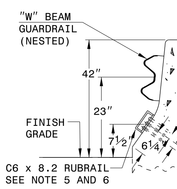


## SECTION A-A

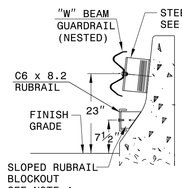


## SECTION B-B

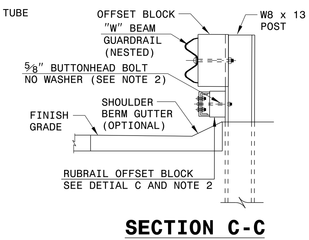


## SECTION C-C

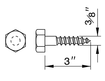


## DETAIL E
## LAG BOLT

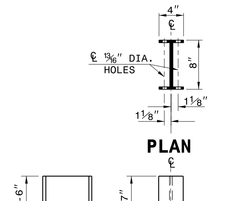


## PLAN

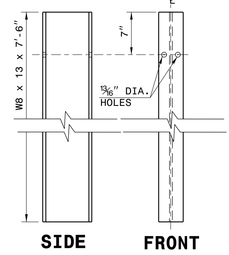


SIDE FRONT

## DETAIL F STEEL POST
## "W8 X 13 X 7'-6"

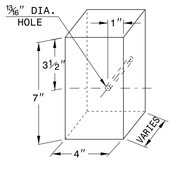


## DETAIL C
## RUBRAIL BLOCKOUT

| RUBRAIL BLOCKS 7" HIGH x 4" WIDE | | |
|---|---|---|
| POST | THICKNESS | BOLT LENGTH |
| 1 | 4¼" | 9" |
| 2 | 3¼" | 5" * |
| 3 | 2" | 6" |
| 4 | 1" | 3" * |

* BOLTS FOR POSTS 2 AND 4 ARE USED TO ATTACH BLOCK TO POST. RUBRAIL NOT ATTACHED TO BLOCK.

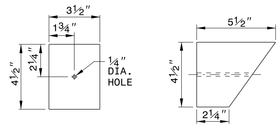


FRONT SIDE

## DETAIL D
## SLOPED RUBRAIL BLOCKOUT

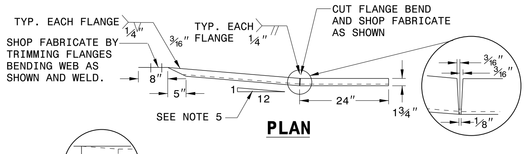


## PLAN

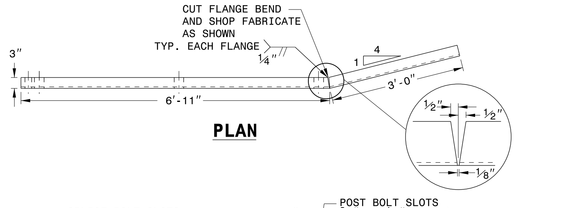


## PLAN

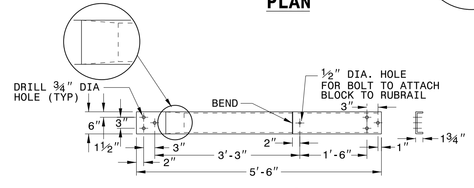


## ELEVATION
## DETAIL A
## C6 x 8.2 RUBRAIL

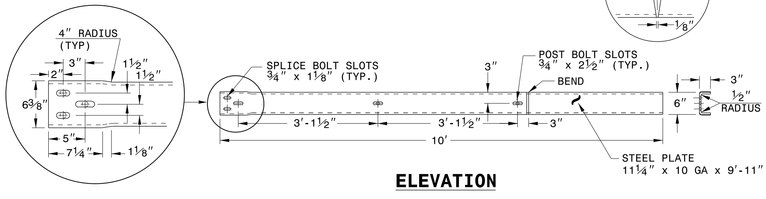


## ELEVATION
## DETAIL B
## BENT PLATE RUBRAIL

## GUARDRAIL ANCHOR UNIT TYPE B-77

SHEET 5 OF 7
**862D03**

STATE OF NORTH CAROLINA
DEPT. OF TRANSPORTATION
DIVISION OF HIGHWAYS
RALEIGH, N.C.

ENGLISH DETAIL DRAWING FOR
**STRUCTURE ANCHOR UNIT**
GUARDRAIL ANCHOR UNIT TYPE B-77
FOR F-SHAPE BARRIER

$$$$$$SYSTIME$$$$$$
$$$$$$

| PROJECT REFERENCE NO. | SHEET NO. |
|---|---|
| 17BP.5.R.50 | 3B-1 |

## SUMMARY OF EARTHWORK

IN CUBIC YARDS

| Station | Station | Uncl. Excav. | Embank. +% | Borrow | Waste |
|---|---|---|---|---|---|
| -L- STA. 10+50.00 | -L- STA. 14+51.00 | 63 | 3700 | 3637 | |
| -L- STA. 16+41.00 | -L- STA. 18+10.00 | 128 | 713 | 585 | |
| SUBTOTALS: | | 191 | 4413 | 4222 | |
| EST. 5% REPLACE TOPSOIL ON BORROW PIT | | | | 212 | |
| GRAND TOTALS: | | 191 | | 4434 | |
| SAY: | | 200 | | 4655 | |

DDE = 64 CY
UNDERCUT EXCAVATION (CONTINGENCY) = 200 CY
SELECT GRANULAR MATERIAL (CONTINGENCY) = 200 CY
GEOTEXTILE FOR SOIL STABILIZATION (CONTINGENCY) = 200 SY

*APPROXIMATE QUANTITIES ONLY.UNCLASSIFIED EXCAVATION,FINE GRADING,CLEARING AND GRUBBING, AND REMOVAL OF EXISTING PAVEMENT WILL BE PAID FOR AT THE CONTRACT LUMP SUM PRICE FOR "GRADING"*

## PAVEMENT REMOVAL SUMMARY

IN SQUARE YARDS

| SURVEY LINE | Station | Station | LOCATION LT/RT/CL | ASPHALT REMOVAL | ASPHALT BREAKUP | CONCRETE REMOVAL | CONCRETE BREAKUP |
|---|---|---|---|---|---|---|---|
| -L- | 10+50.00 | 15+02.07 | CL | 1087 | | | |
| -L- | 15+94.36 | 18+00.00 | CL | 510 | | | |
| | | TOTAL: | | 1597 | | | |
| | | SAY: | | 1605 | | | |

## SHOULDER BERM GUTTER SUMMARY

IN LINEAR FEET

| LINE | Station | Station | LENGTH |
|---|---|---|---|
| -L- (RT) | 13+00.00 | 14+36.83 | 136.83 |
| -L- (RT) | 16+55.17 | 16+69.00 | 13.83 |
| | | TOTAL: | 150.66 |
| | | SAY: | 155 |

"N" = DISTANCE FROM EDGE OF LANE TO FACE OF GUARDRAIL
TOTAL SHOULDER WIDTH = DISTANCE FROM EDGE OF TRAVEL LANE TO SHOULDER BREAK POINT.
FLARE LENGTH = DISTANCE FROM LAST SECTION OF PARALLEL GUARDRAIL TO END OF GUARDRAIL
W = TOTAL WIDTH OF FLARE FROM BEGINNING OF TAPER TO END OF GUARDRAIL

## *GUARDRAIL SUMMARY*

G = GATING IMPACT ATTENUATOR TYPE 350
NG = NON-GATING IMPACT ATTENUATOR TYPE 350

| SURVEY LINE | BEG. STA. | END STA. | LOCATION | LENGTH | | | WARRANT POINT | | "N" DIST. FROM E.O.L. | TOTAL SHOUL WIDTH | FLARE LENGTH | | W | | ANCHORS | | | | | | | | | IMPACT ATTENUATOR TYPE 350 | | SINGLE FACED CONCRETE BARRIER | REMOVE EXISTING GUARDRAIL | REMOVE & STOCKPILE EXISTING GUARDRAIL | REMARKS |
|---|---|---|---|---|---|---|---|---|---|---|---|---|---|---|---|---|---|---|---|---|---|---|---|---|---|---|---|---|---|
| | | | | STRAIGHT | SHOP CURVED | DOUBLE FACED | APPROACH END | TRAILING END | | | APPROACH END | TRAILING END | APPROACH END | TRAILING END | XI MOD | XI | GRAU 350 | M-350 | XIII | CAT-1 | VI MOD | BIC | B-77 | G | NG | | | | |
| -L- | 13+13.50 | 14+51.00 | LT | 137.5 | | | | 14+51.00 | 8' | 11' | | 50 | | 1 | | | 1 | | | | | | 1 | | | | | | TL-3 |
| -L- | 12+01.00 | 14+51.00 | RT | 250 | | | 14+51.00 | | 8' | 11' | 50 | | 1 | | | | 1 | | | | | | 1 | | | | | | TL-3 |
| -L- | 16+41.00 | 17+16.00 | LT | 75 | | | 16+41.00 | | 8' | 11' | 50 | | 1 | | | | 1 | | | | | | 1 | | | | | | TL-3 |
| -L- | 16+41.00 | 17+28.50 | RT | 87.5 | | | | 16+41.00 | 8' | 11' | | 50 | | 1 | | | 1 | | | | | | 1 | | | | | | TL-3 |
| | | | SUBTOTALS | 550 | | | | | | | | | | | | | | | | | | | | | | | | | |
| | | LESS ANCHOR DEDUCTIONS: | | | | | | | | | | | | | | | | | | | | | | | | | | | |
| | | | B-77 (4 @ 18.75') | -75 | | | | | | | | | | | | | | | | | | | | | | | | | |
| | | | GRAU-350 TL-3 (4 @ 50') | -200 | | | | | | | | | | | | | | | | | | | | | | | | | |
| | | | PROJECT TOTAL | 275 | | | | | | | | | | | | | 4 | | | | | | 4 | | | | | | |
| | | | SAY | 275 | | | | | | | | | | | | | | | | | | | | | | | | | |
| | | ADDITIONAL GUARDRAIL POSTS = | | 5 EA | | | | | | | | | | | | | | | | | | | | | | | | | |

REVISIONS

8/17/99

2/13/2017
13:20
USER: Pkris
17BP.340026.RDY_sum_03B-1.dgn

COMPUTED BY: ECOLOGICAL ENG., LLP DATE: 6/2/2016

CHECKED BY: ECOLOGICAL ENG., LLP DATE: 6/2/2016

| PROJECT REFERENCE NO. | SHEET NO. |
|---|---|
| 17BP.5.R.50 | 3D-1 |

# NORTH CAROLINA DEPARTMENT OF TRANSPORTATION
# DIVISION OF HIGHWAYS

**Note: Invert Elevations indicated are for Bid Purposes only and shall not be used for project construction stakeout. See "Standard Specifications For Roads and Structures, Section 300-5".**

## *LIST OF PIPES, ENDWALLS, ETC. (FOR PIPES 48 INCHES & UNDER)*

| STATION | LOCATION (LT, RT, OR CL)' | STRUCTURE NO. FROM | STRUCTURE NO. TO | TOP ELEVATION | INVERT ELEVATION | INVERT ELEVATION | SLOPE CRITICAL | DRAINAGE PIPE (RCP, CSP, CAAP, HDPE, or PVC) SIZE 12" | 15" | 18" | 24" | 30" | 36" | 42" | 48" | DO NOT USE RCP | DO NOT USE CSP | DO NOT USE CAAP | DO NOT USE HDPE | C.S. PIPE SIZE 12" | 15" | 18" | 24" | 30" | 36" | 42" | 48" | THICKNESS OR GAUGE .064 | .064 | .064 | .064 | .079 | .079 | .109 | .109 | R.C. PIPE CLASS III SIZE 12" | 15" | 18" | 24" | 30" | 36" | 42" | 48" | R.C. PIPE CLASS IV SIZE 12" | 15" | 18" | 24" | 30" | 36" | 42" | 48" | *** R.C. PIPE (CLASS V) | **** RC PIPE CULVERTS, CONTRACTOR DESIGN | ***** RC PIPE CULVERTS, CONTRACTOR DESIGN | 15" SIDE DRAIN PIPE | 18" SIDE DRAIN PIPE | ENDWALLS STD. 838.01 838.11 OR STD. 838.80 (UNLESS NOTED OTHERWISE) CU. YARDS R.C.P. | C.S.P. | QUANTITIES FOR DRAINAGE STRUCTURES PER EACH (0' THRU 5.0') | "TOTAL L.F. FOR PAY QUANTITY SHALL BE COL. 'A' + (1.3 X COL. 'B') LIN. FT. A 5.0' THRU 10.0' | B 10.0' AND ABOVE | C.B. STD. 840.01 OR STD. 840.02 | FRAME, GRATES, AND HOOD STANDARD 840.03 TYPE OF GRATE E | F | G | CONCRETE TRANSITIONAL SECTION DROP INLET | CATCH BASIN | D.I. STD. 840.14 OR STD. 840.15 | D.I. FRAME WITH TWO GRATES STD. 840.16 | G.D.I. TYPE "A" STD. 840.17 OR 840.26 | G.D.I. TYPE "B" STD. 840.18 OR 840.27 | G.D.I. TYPE "D" STD. 840.19 OR 840.28 | G.D.I. FRAME WITH GRATE STD. 840.20 | G.D.I. FRAME WITH TWO GRATES STD. 840.22 | G.D.I. (N.S.) FRAME WITH GRATE STD. 840.24 | G.D.I. FRAME (N.S. FLAT) W/2 GRATES STD. 840.29 | T.B.D.I. STD. 840.35 | 15" DRAINAGE PIPE ELBOW | | | | DRAINAGE PIPE ELBOWS NO. & SIZE | CONC. & BRICK PIPE PLUG, C.Y. STD. 840.71 | CONC. COLLARS CL. "B" C.Y. STD. 840.72 | PIPE REMOVAL LIN. FT. | REMARKS |
|---|---|---

| PROJECT REFERENCE NO. | SHEET NO. |
|---|---|
| 17BP.5.R.50 | 4 |
| R/W SHEET NO. | |

ROADWAY DESIGN ENGINEER
NORTH CAROLINA PROFESSIONAL SEAL 034407 ENGINEER ANDREW P. YOUNG
DocuSigned by: Andrew P. Young 2/14/2017
STEWART
Firm License No. C-1051
421 Fayetteville St.
Suite 400
Raleigh, NC 27601
T 919.380.8750
www.stewartinc.com

HYDRAULICS ENGINEER
NORTH CAROLINA PROFESSIONAL SEAL 039102 ENGINEER BRANDON T. BARHAM
DocuSigned by: Brandon Barham 2/14/2017
ECOLOGICAL ENGINEERING
NC FIRM LICENSE No: F-1148
1151 SE Cary Parkway, Suite 101
Cary, NC 27511
(919) 557-9929

**DOCUMENT NOT CONSIDERED FINAL UNLESS ALL SIGNATURES COMPLETED**

REVISIONS

8/17/99

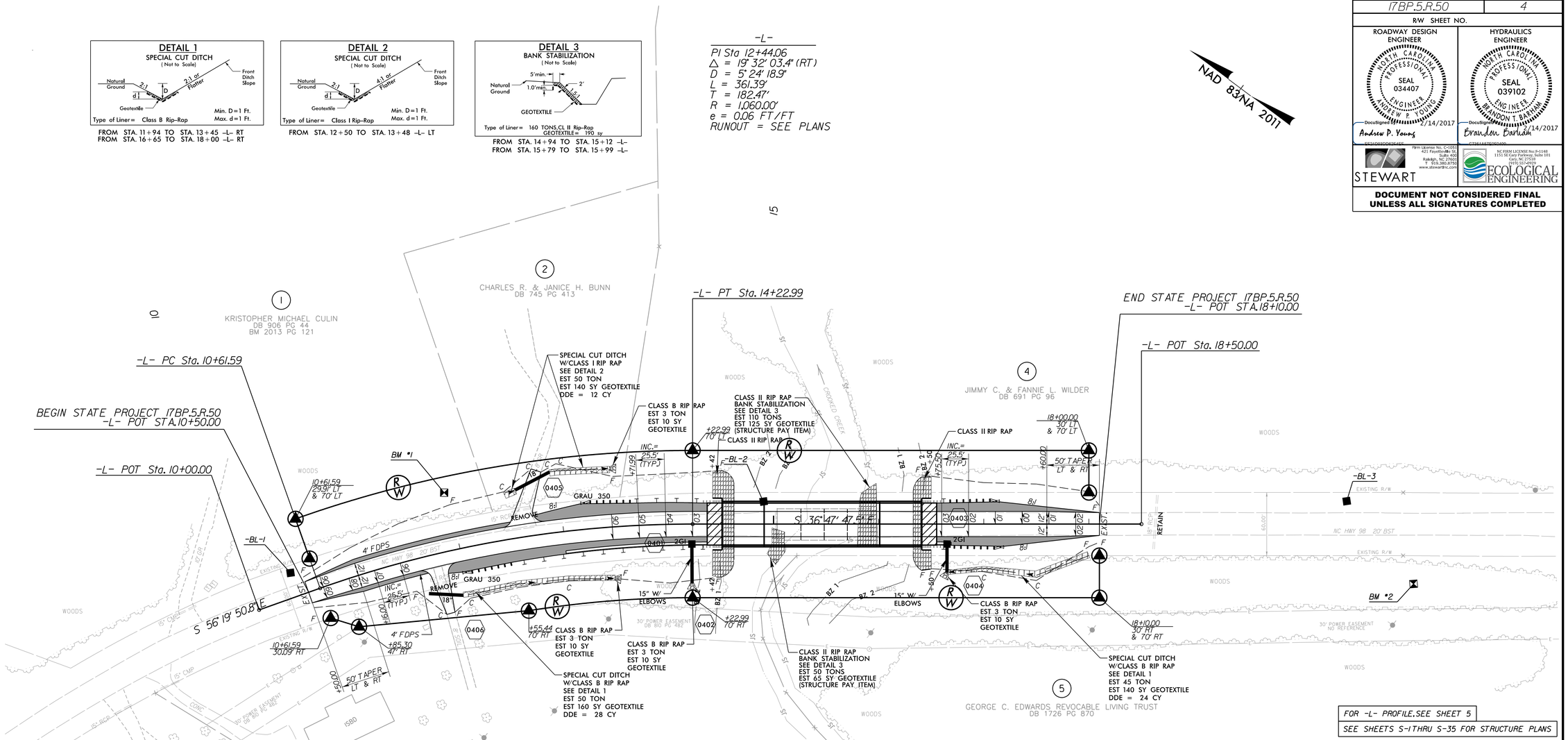


FOR -L- PROFILE,SEE SHEET 5

SEE SHEETS S-1THRU S-35 FOR STRUCTURE PLANS

REMOVE ALL PORTIONS OF END BENT AND PLACE BANK STABILIZATION WITH CLASS II RIP RAP TO AREA SHOWN ON STREAMBANK (EC-4, DETAIL 3). USE IMPERVIOUS DIKE NCDOT STANDARD BMP ALONG STREAMBANK TO DEWATER AND ISOLATE ADJACENT WORK AREA TO REMOVE EXSITING END BENT AND INSTALL STABALIZATION IN THE DRY. THE PLACEMENT OF THE IMPERVIOUS DIKE IS CONSIDERED INCIDENTIAL TO REMOVAL OF THE END BENT AND INSTALLATION OF THE BANK STABALIZATION.

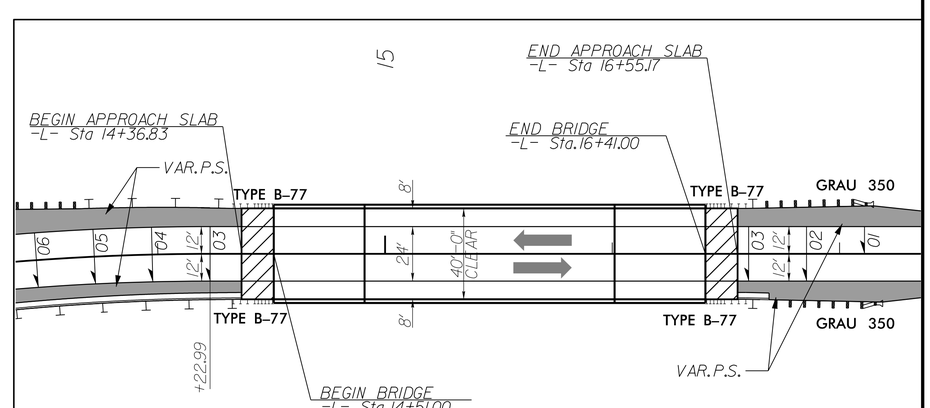


PAVEMENT-BRIDGE RELATIONSHIP SKETCH (NOT TO SCALE)

2/13/2017
17BP.5.R.50_340026.RDY.psh.04.dgn
USER: P.Barham

| PROJECT REFERENCE NO. | SHEET NO. |
|---|---|
| 17BP.5.R.50 | 5 |

ROADWAY DESIGN ENGINEER
NORTH CAROLINA PROFESSIONAL SEAL 034407 ENGINEER ANDREW P. YOUNG
DocuSigned by: Andrew P. Young 2/14/2017

HYDRAULICS ENGINEER
NORTH CAROLINA PROFESSIONAL SEAL 039102 ENGINEER BRANDON T. BARHAM
DocuSigned by: Brandon Barham 2/14/2017

STEWART — Firm License No. C-0051, 421 Fayetteville St., Suite 400, Raleigh, NC 27601, T: 919.380.8799, www.stewartinc.com

NC FIRM LICENSE No F-1148, 1155 SE Cary Parkway, Suite 101, Cary, NC 27518, (919) 557-0929

ECOLOGICAL ENGINEERING

**DOCUMENT NOT CONSIDERED FINAL UNLESS ALL SIGNATURES COMPLETED**

REVISIONS

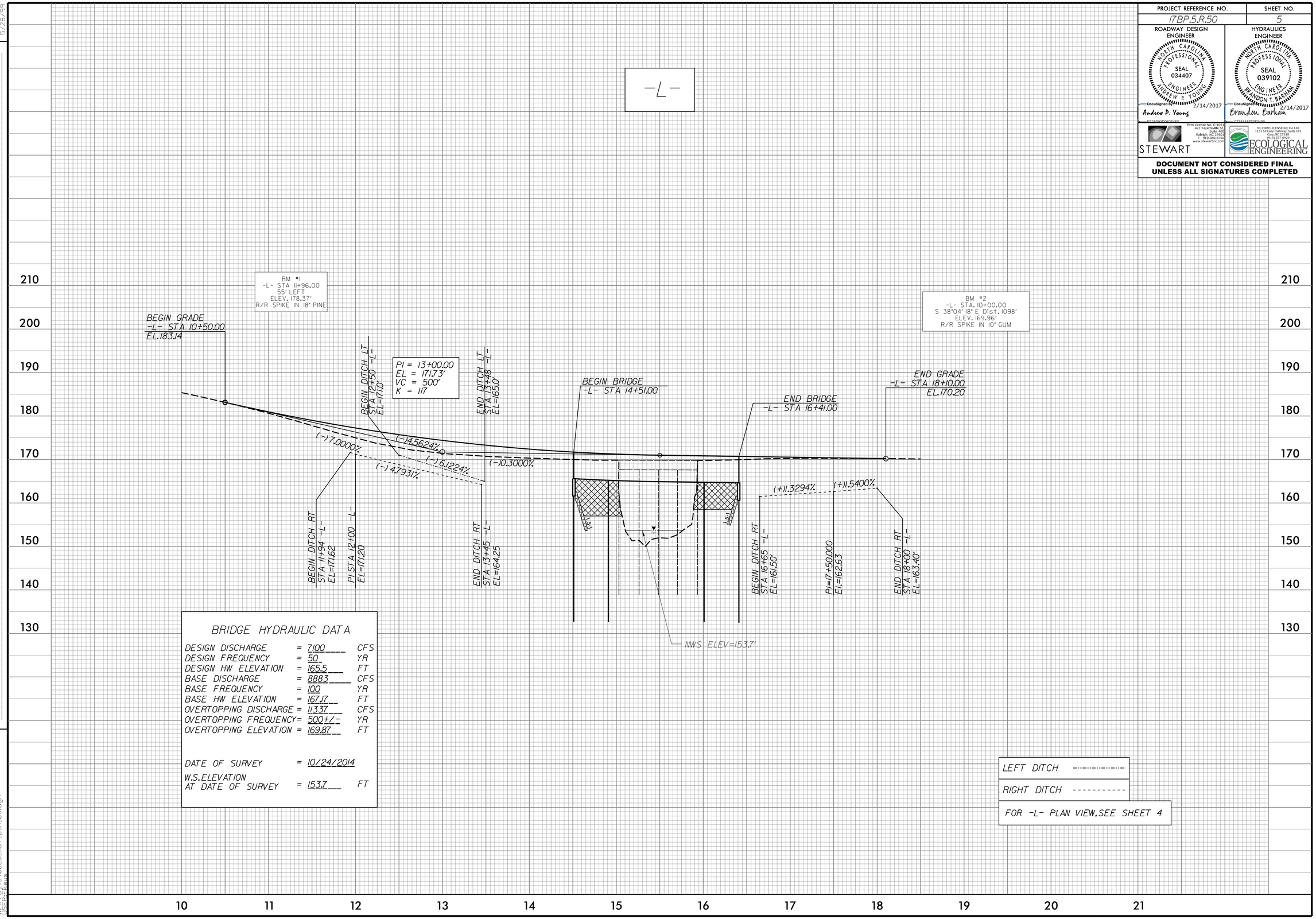


## BRIDGE HYDRAULIC DATA

| | | | |
|---|---|---|---|
| DESIGN DISCHARGE | = | 7100 | CFS |
| DESIGN FREQUENCY | = | 50 | YR |
| DESIGN HW ELEVATION | = | 165.5 | FT |
| BASE DISCHARGE | = | 8883 | CFS |
| BASE FREQUENCY | = | 100 | YR |
| BASE HW ELEVATION | = | 167.17 | FT |
| OVERTOPPING DISCHARGE | = | 1133.7 | CFS |
| OVERTOPPING FREQUENCY | = | 500+/- | YR |
| OVERTOPPING ELEVATION | = | 169.87 | FT |
| DATE OF SURVEY | = | 10/24/2014 | |
| W.S.ELEVATION AT DATE OF SURVEY | = | 153.7 | FT |

LEFT DITCH -·-·-·-·-·-·-·-

RIGHT DITCH - - - - - - - - - -

FOR -L- PLAN VIEW, SEE SHEET 4

5/28/99

2/13/2017
17BP.5.R.50_340026_RDY_psh_05.dgn
USER: kbaus

STATE OF NORTH CAROLINA
DIVISION OF HIGHWAYS

# TRANSPORTATION MANAGEMENT PLAN

# FRANKLIN COUNTY

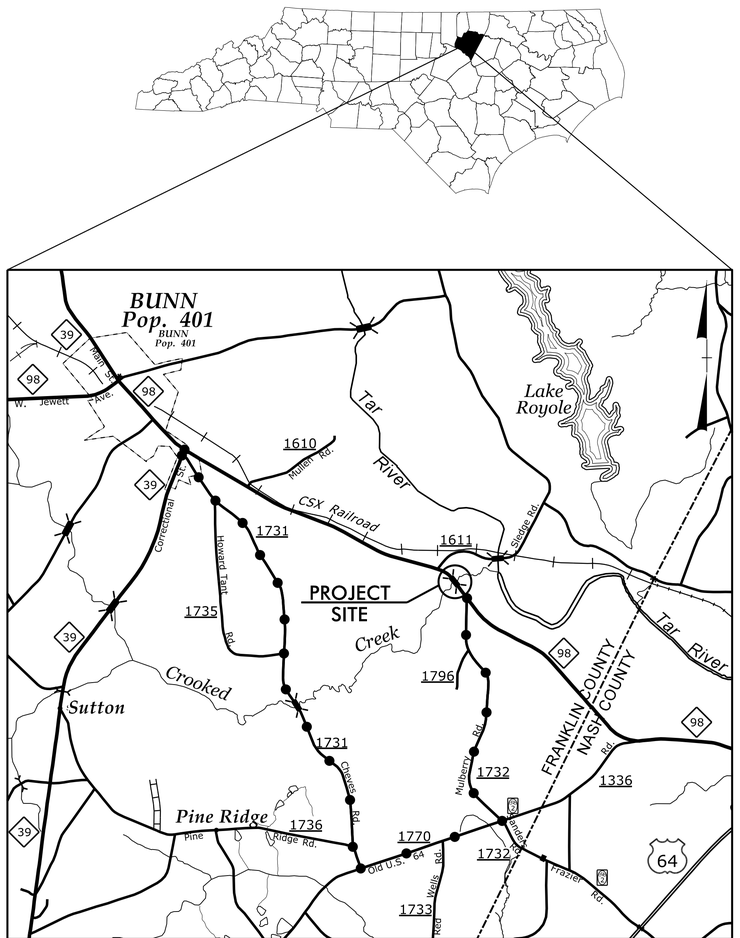


VICINITY MAP

OFFSITE DETOUR ROUTE

## INDEX OF SHEETS


| SHEET NO. | TITLE |
|---|---|
| TMP-1 | TITLE SHEET, AND INDEX OF SHEETS |
| TMP-1A | LIST OF APPLICABLE ROADWAY STANDARD DRAWINGS, LEGEND, AND TEMPORARY PAVEMENT MARKING |
| TMP-1B | TRANSPORTATION OPERATIONS PLAN: (MANAGEMENT STRATEGIES, GENERAL NOTES AND LOCAL NOTES) |
| TMP-2 | SPECIAL SIGN DESIGN |
| TMP-3 | TEMPORARY TRAFFIC CONTROL PHASING |


SHEET NO.
TMP-1

17BP.5.R.50

TIP PROJECT:

WORK ZONE SAFETY & MOBILITY
"from the MOUNTAINS to the COAST"


N.C.D.O.T. WORK ZONE TRAFFIC CONTROL
1561 MAIL SERVICE CENTER (MSC) RALEIGH, NC 27699-1561
750 N. GREENFIELD PARKWAY, GARNER, NC 27529 (DELIVERY)
PHONE: (919) 773-2800 FAX: (919) 771-2745

ANDY YOUNG, PE — TRAFFIC CONTROL PROJECT ENGINEER
MICHAEL BURNS, EI — TRAFFIC CONTROL PROJECT DESIGN ENGINEER


DIVISION OF HIGHWAYS · STATE OF NORTH CAROLINA · DEPARTMENT OF TRANSPORTATION · WORK ZONE TRAFFIC CONTROL

DOCUMENT NOT CONSIDERED FINAL
UNLESS ALL SIGNATURES COMPLETED

PLANS PREPARED BY:

STEWART
421 FAYETTEVILLE ST, STE 400
RALEIGH, NC 27601
T 919.380.8750
Firm License #: C-1051
www.stewartinc.com
PROJECT #:B11001

APPROVED: DocuSigned by: Andrew P. Young
DATE: 2/13/2017

SEAL

2/13/2017
...\TCP\720026_TC_TCP_01.dgn
USER:rfkeys

| PROJ. REFERENCE NO. | SHEET NO. |
|---|---|
| 17BP.5.R.50 | TMP-1A |

# ROADWAY STANDARD DRAWINGS

THE FOLLOWING ROADWAY STANDARDS AS SHOWN IN "ROADWAY STANDARD DRAWINGS" - PROJECT SERVICES UNIT - N.C. DEPARTMENT OF TRANSPORTATION - RALEIGH, N.C., DATED JANAUARY 2012 ARE APPLICABLE TO THIS PROJECT AND BY REFERENCE HEREBY ARE CONSIDERED A PART OF THESE PLANS:

| STD. NO. | TITLE |
|---|---|
| 1101.01 | WORK ZONE ADVANCE WARNING SIGNS |
| 1101.03 | TEMPORARY ROAD CLOSURES |
| 1101.11 | TRAFFIC CONTROL DESIGN TABLES |
| 1110.01 | STATIONARY WORK ZONE SIGNS |
| 1145.01 | BARRICADES |

# LEGEND

## GENERAL

DIRECTION OF TRAFFIC FLOW
DIRECTION OF PEDESTRIAN TRAFFIC FLOW
EXIST. PVMT.
NORTH ARROW
PROPOSED PVMT.
TEMP. SHORING (LOCATION PURPOSES ONLY)
WORK AREA
REMOVAL

## TRAFFIC CONTROL DEVICES

BARRICADE (TYPE III)
CONE
DRUM  SKINNY DRUM  TUBULAR MARKER
TEMPORARY CRASH CUSHION
FLASHING ARROW BOARD
FLAGGER
LAW ENFORCEMENT
TRUCK MOUNTED ATTENUATOR (TMA)
CHANGEABLE MESSAGE SIGN

## TEMPORARY SIGNING

PORTABLE SIGN
STATIONARY SIGN
STATIONARY OR PORTABLE SIGN

## SIGNALS

EXISTING  PROPOSED  TEMPORARY

## PAVEMENT MARKINGS

EXISTING LINES
TEMPORARY LINES

## PAVEMENT MARKERS

CRYSTAL/CRYSTAL
CRYSTAL/RED
YELLOW/YELLOW

## PAVEMENT MARKING SYMBOLS

PAVEMENT MARKING SYMBOLS

STEWART
Firm License No. C-1051
421 Fayetteville St,
Suite 400
Raleigh, NC 27601
T 919.380.8750
www.stewartinc.com

DOCUMENT NOT CONSIDERED FINAL UNLESS ALL SIGNATURES COMPLETED

APPROVED: Andrew P. Young DATE: 2/13/2017

SEAL

NORTH CAROLINA PROFESSIONAL SEAL 34407 ENGINEER ANDREW P. YOUNG

DIVISION OF HIGHWAYS STATE OF NORTH CAROLINA DEPARTMENT OF TRANSPORTATION WORK ZONE TRAFFIC CONTROL

ROADWAY STANDARD DRAWINGS & LEGEND

2/13/2017
...\TCP\T20026_TC_TCP_01A.dgn
USER:keys

| PROJ. REFERENCE NO. | SHEET NO. |
|---|---|
| 17BP.5.R.50 | TMP-1B |

# GENERAL NOTES

CHANGES MAY BE REQUIRED WHEN PHYSICAL DIMENSIONS IN THE DETAIL DRAWINGS, STANDARD DETAILS, AND ROADWAY DETAILS ARE NOT ATTAINABLE TO MEET FIELD CONDITIONS OR RESULT IN DUPLICATE OR UNDESIRED OVERLAPPING OF DEVICES. MODIFICATION MAY INCLUDE: MOVING, SUPPLEMENTING, COVERING, OR REMOVAL OF DEVICES AS DIRECTED BY THE ENGINEER.

THE FOLLOWING GENERAL NOTES APPLY AT ALL TIMES FOR THE DURATION OF THE CONSTRUCTION PROJECT EXCEPT WHEN OTHERWISE NOTED IN THE PLAN OR DIRECTED BY THE ENGINEER.

TRAFFIC PATTERN ALTERATIONS

A) NOTIFY THE ENGINEER THIRTY (30) CALENDAR DAYS PRIOR TO ANY TRAFFIC PATTERN ALTERATION.

SIGNING

B) INSTALL ADVANCE WORK ZONE WARNING SIGNS WHEN WORK IS WITHIN 40 FT FROM THE EDGE OF TRAVEL LANE AND NO MORE THAN THREE (3) DAYS PRIOR TO THE BEGINNING OF CONSTRUCTION.

C) PROVIDE SIGNING AND DEVICES REQUIRED TO CLOSE THE ROAD ACCORDING TO THE ROADWAY STANDARD DRAWINGS AND TRAFFIC CONTROL PLANS.

PROVIDE SIGNING REQUIRED FOR THE OFF-SITE DETOUR ROUTE AS SHOWN IN THE TRAFFIC CONTROL PLANS.

D) COVER OR REMOVE ALL SIGNS AND DEVICES REQUIRED TO CLOSE THE ROAD WHEN ROAD CLOSURE IS NOT IN OPERATION.

COVER OR REMOVE ALL SIGNS REQUIRED FOR THE OFF-SITE DETOUR WHEN THE DETOUR IS NOT IN OPERATION.

E) ENSURE ALL NECESSARY SIGNING IS IN PLACE PRIOR TO ALTERING ANY TRAFFIC PATTERN.

TRAFFIC CONTROL DEVICES

F) PLACE TYPE III BARRICADES, WITH "ROAD CLOSED" SIGN R11-2 ATTACHED, OF SUFFICIENT LENGTH TO CLOSE ENTIRE ROADWAY.

PAVEMENT MARKINGS AND MARKERS

G) TIE PROPOSED PAVEMENT MARKING LINES TO EXISTING PAVEMENT MARKING LINES.

# MANAGEMENT STRATEGIES

DURING CONSTRUCTION OF PROPOSED STRUCTURE BRIDGE No. 26 OVER CROOKED CREEK, NC 98 WILL BE CLOSED TO THROUGH TRAFFIC. LOCAL TRAFFIC ON NC 98 WILL BE MAINTAINED USING AN OFFSITE DETOUR.

ACCESS TO ALL RESIDENCES AND BUSINESSES WITHIN THE PROJECT LIMITS MUST BE MAINTAINED AT ALL TIMES.

NOTIFY THE ENGINEER, FRANKLIN COUNTY EMERGENCY SERVICES, AND FRANKLIN COUNTY SCHOOLS OF BRIDGE REMOVAL THIRTY (30) CALENDAR DAYS PRIOR TO ROAD CLOSURE.

# PHASING

STEP 1:

PROVIDE CHANGEABLE MESSAGE SIGN WITH COUNTDOWN FOURTEEN (14) DAYS PRIOR TO CLOSURE OF NC 98 AT BOTH POINTS OF ROAD CLOSURE.

STEP 2:

USING RSD 1101.03, SHEET 1 OF 9, SHEETS TMP-2 AND TMP-3, INSTALL DETOUR SIGNS, PLACE TYPE III BARRICADES TO CLOSE NC 98 TO THROUGH TRAFFIC, AND DETOUR TRAFFIC OFFSITE.

STEP 3:

AWAY FROM TRAFFIC, COMPLETE THE FOLLOWING:
(SEE ROADWAY AND STRUCTURE PLANS).

1) REMOVE EXISTING STRUCTURE No. 26 AND CONSTRUCT THE PROPOSED STRUCTURE FROM -L- STA. 14+51.00 TO -L- STA 16+41.00.

2) CONSTRUCT THE PROPOSED ROADWAY UP TO AND INCLUDING THE FINAL LAYER OF SURFACE COURSE FROM -L- STA. 10+50.00 TO -L- STA. 14+51.00 AND -L- STA 16+41.00 TO -L- STA 18+00.00.

3) USING THE FINAL PAVEMENT MARKING PLAN, PLACE FINAL PAVEMENT MARKINGS AND MARKERS, FROM -L- STA. 10+50.00 TO -L- STA. 18+00.00 AND TIE TO EXISTING PAVEMENT MARKINGS.

STEP 4:

OPEN ROADWAY TO TRAFFIC AND REMOVE ALL WORK ZONE SIGNAGE.

STEWART
Firm License No. C-1051
421 Fayetteville St,
Suite 400
Raleigh, NC 27601
T 919.380.8750
www.stewartinc.com

DOCUMENT NOT CONSIDERED FINAL UNLESS ALL SIGNATURES COMPLETED

APPROVED Andrew P. Young DATE: 2/13/2017

SEAL

NORTH CAROLINA PROFESSIONAL SEAL 34407 ENGINEER ANDREW P. YOUNG

DIVISION OF HIGHWAYS STATE OF NORTH CAROLINA DEPARTMENT OF TRANSPORTATION WORK ZONE TRAFFIC CONTROL

TRANSPORTATION OPERATIONS PLAN

2/13/2017
...\TCP\T20026_TC_TCP_01B.dgn
USER:Keys

| PROJ. REFERENCE NO. | SHEET NO. |
|---|---|
| 17BP.5.R.50 | TMP-2 |

SIGN NUMBER: NC 98
TYPE: STATIONARY
QUANTITY: SEE PLANS

SIGN WIDTH: 2′-0″
HEIGHT: 1′-6″
TOTAL AREA: 3.0 Sq.Ft.

BORDER TYPE: INSET
RECESS: 0.38″
WIDTH: 0.63″
RADII: 1.5″

NO. Z BARS:
LENGTH:

BACKG COLOR: Fluorescent Orange
COPY COLOR: Black

| SYMBOL | X | Y | WID | HT |
|---|---|---|---|---|
| | | | | |

MAT'L: 0.080″ (2.0 mm) ALUMINUM

DESIGN BY: MSB
CHECKED BY: DRR
DATE: Oct 16, 2015
PROJECT ID: 17BP.5.R.50
DIV: 5

USE NOTES: 1,2

1. Legend and border shall be direct applied black non-reflective sheeting.
2. Background shall be NC GRADE B fluoresent orange retroreflective sheeting.

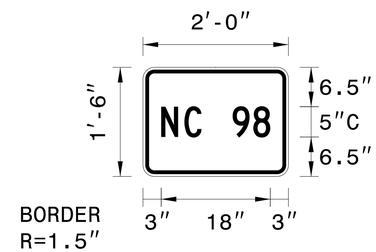


BORDER
R=1.5″
TH=0.63″
IN=0.38″

Panel Style: Traffic Control.ssi
M.U.T.C.D.: 2009 Edition

Spacing Factor is 1 unless specified otherwise

LETTER POSITIONS

**Letter locations are panel edge to lower left corner**

| | N | C | | 9 | 8 | Series/Size Text Length |
|---|---|---|---|---|---|---|
| | 3 | 6.8 | 9.6 | 14.8 | 18.2 | C 2000 18 |

FILENAME: 720026_TC_TCP_02

NORTH CAROLINA D.O.T. SIGN DETAIL

STEWART
Firm License No. C-1051
421 Fayetteville St,
Suite 400
Raleigh, NC 27601
T 919.380.8750
www.stewartinc.com

DOCUMENT NOT CONSIDERED FINAL UNLESS ALL SIGNATURES COMPLETED
APPROVED: Andrew P. Young DATE: 2/13/2017
SEAL
NORTH CAROLINA PROFESSIONAL SEAL 34407 ENGINEER ANDREW P YOUNG

DIVISION OF HIGHWAYS STATE OF NORTH CAROLINA DEPARTMENT OF TRANSPORTATION WORK ZONE TRAFFIC CONTROL

SPECIAL SIGN DESIGN

2/13/2017
...\TCP\T20026_TC_TCP_02.dgn
USER:rkeys

| PROJ. REFERENCE NO. | SHEET NO. |
|---|---|
| 17BP.5.R.50 | TMP-3 |

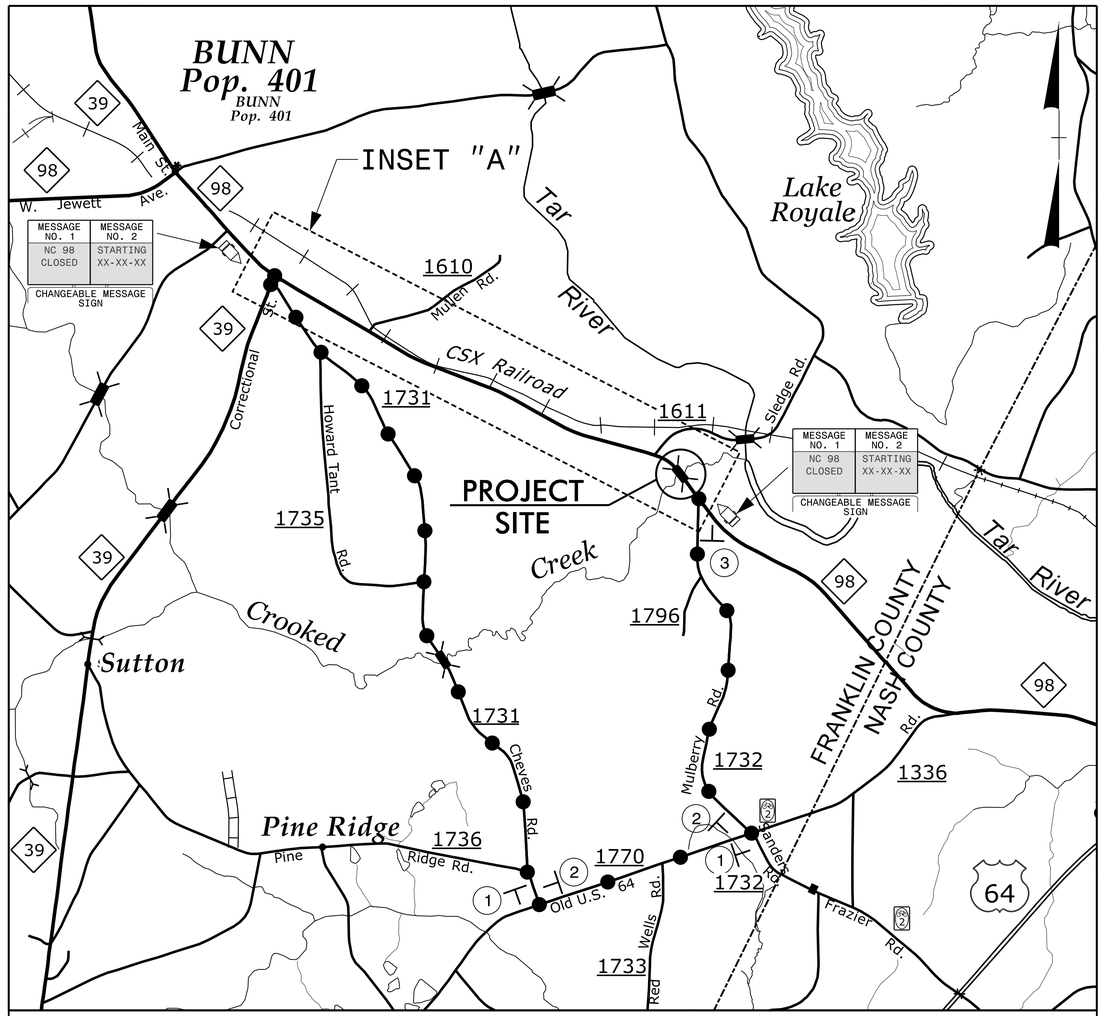


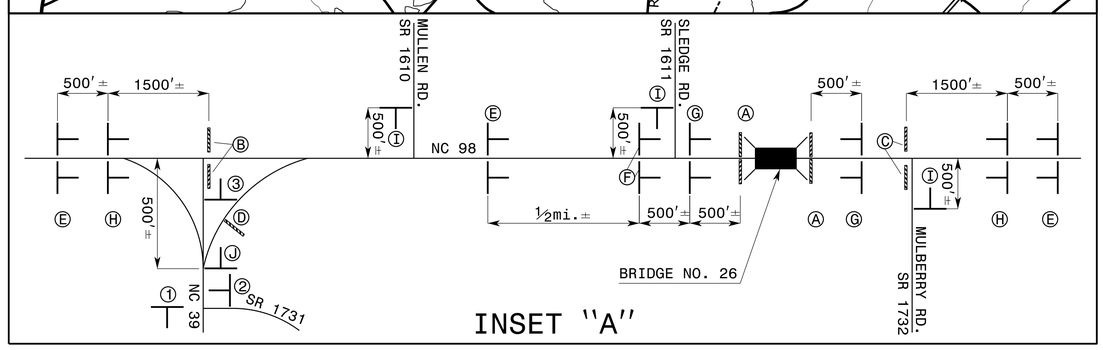


REFER TO ROADWAY STANDARD DRAWING 1101.03, SHEET 1 OF 9 FOR APPLICABLE NOTES.

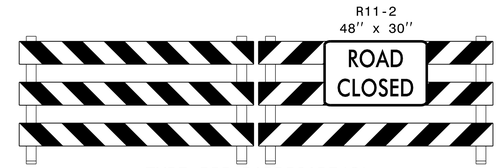


TYPE III BARRICADE(S)

A

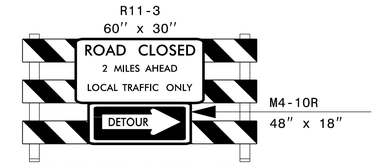


TYPE III BARRICADE

B

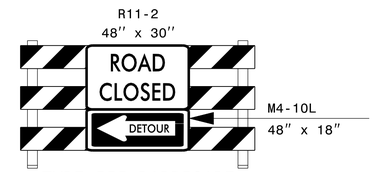


TYPE III BARRICADE

C

TYPE III BARRICADE

D

E

F

G

H

I

J

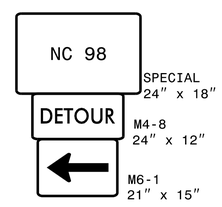


1

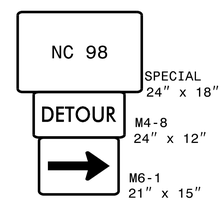


2

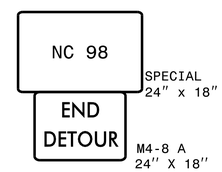


3

DOCUMENT NOT CONSIDERED FINAL UNLESS ALL SIGNATURES COMPLETED

APPROVED: Andrew P. Young DATE: 2/13/2017


STEWART
Firm License No. C-1051
421 Fayetteville St,
Suite 400
Raleigh, NC 27601
T 919.380.8750
www.stewartinc.com


SEAL

NORTH CAROLINA PROFESSIONAL SEAL 34407 ENGINEER ANDREW P. YOUNG

DIVISION OF HIGHWAYS STATE OF NORTH CAROLINA DEPARTMENT OF TRANSPORTATION WORK ZONE TRAFFIC CONTROL

# OFF-SITE DETOUR

2/13/2017
...\TCP\720026_TC_TCP_03.dgn
USER:Keys

WBS: 17BP.5.R.50

CONTRACT: DE00152

| TIP NO. | SHEET NO. |
|---|---|
| 17BP.5.R.50 | PMP-1 |

APPROVED: DocuSigned by: Andrew P. Young EF21D93DD62F4EF...

DATE: 2/13/2017

SEAL: NORTH CAROLINA PROFESSIONAL SEAL 34407 ENGINEER ANDREW P. YOUNG

**DOCUMENT NOT CONSIDERED FINAL UNLESS ALL SIGNATURES COMPLETED**

# STATE OF NORTH CAROLINA
# DEPARTMENT OF TRANSPORTATION

# PAVEMENT MARKING PLAN

## FRANKLIN COUNTY

### LOCATION: BRIDGE NO. 26 OVER CROOKED CREEK ON NC 98

## ROADWAY STANDARD DRAWING

THE FOLLOWING ROADWAY STANDARDS AS APPEAR IN "ROADWAY STANDARD DRAWINGS" - PROJECT SERVICES UNIT - N.C. DEPARTMENT OF TRANSPORTATION - RALEIGH, N.C., DATED JANUARY 2012 ARE APPLICABLE TO THIS PROJECT AND BY REFERENCE HEREBY ARE CONSIDERED A PART OF THESE PLANS:

| STD. NO. | TITLE |
|---|---|
| 1205.01 | PAVEMENT MARKINGS - LINE TYPES AND OFFSETS |
| 1205.02 | PAVEMENT MARKINGS - TWO-LANE AND MULTILANE ROADWAYS |
| 1205.12 | PAVEMENT MARKINGS - BRIDGES |
| 1250.01 | RAISED PAVEMENT MARKERS - INSTALLATION SPACING |
| 1251.01 | RAISED PAVEMENT MARKERS - PERMANENT AND TEMPORARY |
| 1261.01 | GUARDRAIL AND BARRIER DELINEATORS - INSTALLATION SPACING |
| 1261.02 | GUARDRAIL AND BARRIER DELINEATORS - TYPES AND MOUNTING |
| 1262.01 | GUARDRAIL END DELINEATION |

## PAVEMENT MARKING SCHEDULE

| SYMBOL | DESCRIPTION |
|---|---|
| TA | THERMOPLASIC WHITE EDGELINE (4") |
| TI | THERMOPLASTIC YELLOW DOUBLE CENTER (4") |
| CA | COLD APPLIED WHITE EDGELINE (4") |
| CI | COLD APPLIED YELLOW DOUBLE CENTER (4") |
| MA | PERMANENT RAISED PAVEMENT MARKER YELLOW AND YELLOW |

## GENERAL NOTES

THE FOLLOWING GENERAL NOTES APPLY AT ALL TIMES FOR THE DURATION OF THE CONSTRUCTION PROJECT, EXCEPT WHEN OTHERWISE NOTED IN THE PLAN, OR DIRECTED BY THE ENGINEER.

A) INSTALL PAVEMENT MARKINGS AND PAVEMENT MARKERS ON THE FINAL SURFACE AS FOLLOWS:

| ROAD NAME | MARKING | MARKER |
|---|---|---|
| NC 98 | THERMOPLASTIC | RAISED |
| BRIDGE | COLD APPLIED | RAISED |

B) TIE PROPOSED PAVEMENT MARKING LINES TO EXISTING PAVEMENT MARKING LINES.

C) REMOVE/REPLACE ANY CONFLICTING/DAMAGED PAVEMENT MARKINGS.

D) PASSING ZONES WILL BE DETERMINED IN THE FIELD AND MUST BE APPROVED BY THE ENGINEER.

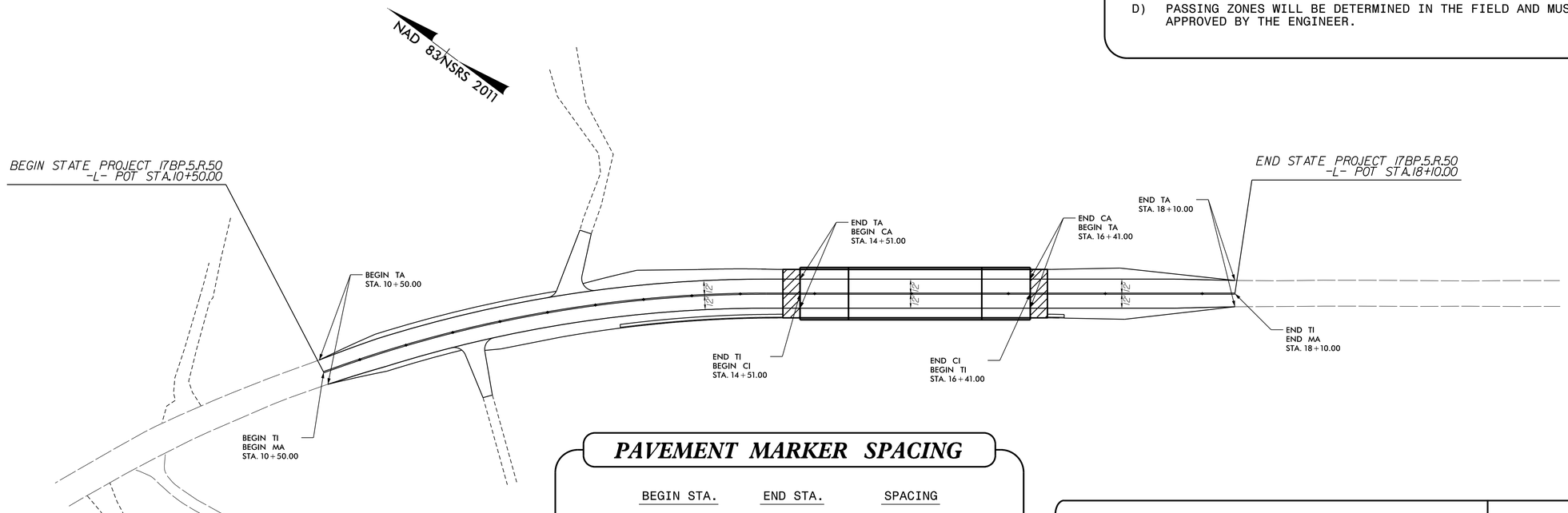


## PAVEMENT MARKER SPACING

| BEGIN STA. | END STA. | SPACING |
|---|---|---|
| 10+50.00 | 10+61.59 | 80' |
| 10+61.59 | 14+22.99 | 40' |
| 14+22.99 | 18+10.00 | 80' |

**PLAN PREPARED BY: STEWART**

| | |
|---|---|
| ANDY YOUNG, PE | PROJECT ENGINEER |
| MICHAEL BURNS, EI | PROJECT DESIGN ENGINEER |


STEWART
Firm License No. C-1051
421 Fayetteville St.
Suite 400
Raleigh, NC 27601
T 919.380.8750
www.stewartinc.com


2/13/2017
...\TCP\72026_TC_PMP_01.dgn
USER:Keys

TIP PROJECT: 17BP.5.R.50

| STATE | STATE PROJECT REFERENCE NO. | SHEET NO. | TOTAL SHEETS |
|---|---|---|---|
| N.C. | 17BP.5.R.50 | EC-1 | |

| STATE PROJ. NO. | F. A. PROJ. NO. | DESCRIPTION |
|---|---|---|
| | | |
| | | |
| | | |
| | | |
| | | |

# STATE OF NORTH CAROLINA
# DIVISION OF HIGHWAYS

## PLAN FOR PROPOSED
# HIGHWAY EROSION CONTROL

# *FRANKLIN COUNTY*

***LOCATION: BRIDGE NO. 26 OVER CROOKED CREEK ON NC 98***

***TYPE OF WORK: GRADING, DRAINAGE, PAVING, AND STRUCTURE***

**ENVIRONMENTALLY SENSITIVE AREA(S) EXIST ON THIS PROJECT**

***Refer To E. C. Special Provisions for Special Considerations.***

***THIS PROJECT CONTAINS EROSION CONTROL PLANS FOR CLEARING AND GRUBBING PHASE OF CONSTRUCTION.***

***THIS PROJECT HAS BEEN DESIGNED TO SENSITIVE WATERSHED STANDARDS.***

NC GRID NAD 83 NA 2011

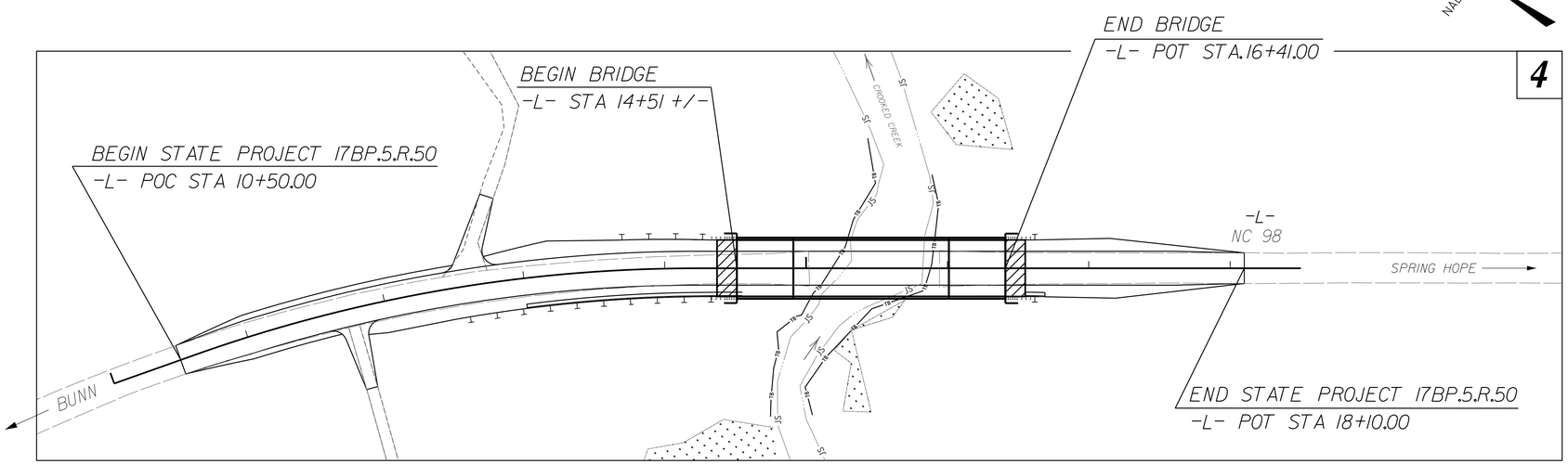


## EROSION AND SEDIMENT CONTROL MEASURES

| Std. # | Description | Symbol |
|---|---|---|
| 1630.03 | Temporary Silt Ditch | TSD |
| 1630.05 | Temporary Diversion | TD |
| 1605.01 | Temporary Silt Fence | |
| 1606.01 | Special Sediment Control Fence | |
| 1622.01 | Temporary Berms and Slope Drains | |
| 1630.02 | Silt Basin Type B | |
| 1633.01 | Temporary Rock Silt Check Type-A | |
| | Temporary Rock Silt Check Type-A with Matting and Polyacrylamide (PAM) | |
| 1633.02 | Temporary Rock Silt Check Type-B | |
| | Wattle/ Coir Fiber Wattle | EW CFW |
| | Wattle/ Coir Fiber Wattle with Polyacrylamide (PAM) | |
| 1634.01 | Temporary Rock Sediment Dam Type-A | |
| 1634.02 | Temporary Rock Sediment Dam Type-B | |
| 1635.01 | Rock Pipe Inlet Sediment Trap Type-A | |
| 1635.02 | Rock Pipe Inlet Sediment Trap Type-B | |
| 1630.04 | Stilling Basin | |
| 1630.06 | Special Stilling Basin | |
| | Rock Inlet Sediment Trap: | |
| 1632.01 | Type A | A |
| 1632.02 | Type B | B |
| 1632.03 | Type C | C |
| | Skimmer Basin | |
| | Tiered Skimmer Basin | |
| | Infiltration Basin | |

**GRAPHIC SCALE**

25 0 50
PLANS

25 0 50
PROFILE (HORIZONTAL)

5 0 10
PROFILE (VERTICAL)

***THESE EROSION AND SEDIMENT CONTROL PLANS COMPLY WITH THE REGULATIONS SET FORTH BY THE NCG-010000 GENERAL CONSTRUCTION PERMIT EFFECTIVE AUGUST 3, 2011 AND ISSUED BY THE NORTH CAROLINA DEPARTMENT OF ENVIRONMENT AND NATURAL RESOURCES DIVISION OF WATER RESOURCES.***

*Prepared in the Office of:*

ECOLOGICAL ENGINEERING

NC FIRM LICENSE No: F-1148
1151 SE Cary Parkway
Suite 101
Cary, NC 27518
(919) 557-0929

***2012 STANDARD SPECIFICATIONS***

*Designed by:*

***BRANDON BARHAM*** — *NAME*

***3368*** — *LEVEL III CERTIFICATION NO.*

*Reviewed in the Office of:*

***ROADSIDE ENVIRONMENTAL UNIT***

*1 South Wilmington St.*
*Raleigh, NC 27611*

***2012 STANDARD SPECIFICATIONS***

*Reviewed by:*

**Roadway Standard Drawings**

The following roadway english standards as appear in "Roadway Standard Drawings"– Roadway Design Unit – N. C. Department of Transportation – Raleigh, N. C., dated January 2012 and the latest revison thereto are applicable to this project and by reference hereby are considered a part of these plans.

| | | | |
|---|---|---|---|
| 1604.01 | Railroad Erosion Control Detail | 1632.01 | Rock Inlet Sediment Trap Type A |
| 1605.01 | Temporary Silt Fence | 1632.02 | *Rock Inlet Sediment Trap Type B* |
| 1606.01 | Special Sediment Control Fence | 1632.03 | Rock Inlet Sediment Trap Type C |
| 1607.01 | Gravel Construction Entrance | 1633.01 | Temporary Rock Silt Check Type A |
| 1622.01 | *Temporary Berms and Slope Drains* | 1633.02 | *Temporary Rock Silt Check Type B* |
| 1630.01 | *Riser Basin* | 1634.01 | Temporary Rock Sediment Dam Type A |
| 1630.02 | *Silt Basin Type B* | 1634.02 | *Temporary Rock Sediment Dam Type B* |
| 1630.03 | Temporary Silt Ditch | 1635.01 | Rock Pipe Inlet Sediment Trap Type A |
| 1630.04 | *Stilling Basin* | 1635.02 | *Rock Pipe Inlet Sediment Trap Type B* |
| 1630.05 | Temporary Diversion | 1640.01 | *Coir Fiber Baffle* |
| 1630.06 | *Special Stilling Basin* | 1645.01 | Temporary Stream Crossing |
| 1631.01 | Matting Installation | | |

9/30/2016
Prepared in 2012 CD Standards
USER: brham PW: EC_TSH.dgn

| PROJECT REFERENCE NO. | SHEET NO. |
|---|---|
| 17BP.5.R.50 | EC-02 |
| R/W SHEET NO. | |
| ROADWAY DESIGN ENGINEER | HYDRAULICS ENGINEER |

# TEMPORARY ROCK SILT CHECK TYPE 'A' WITH EXCELSIOR MATTING AND POLYACRYLAMIDE (PAM)

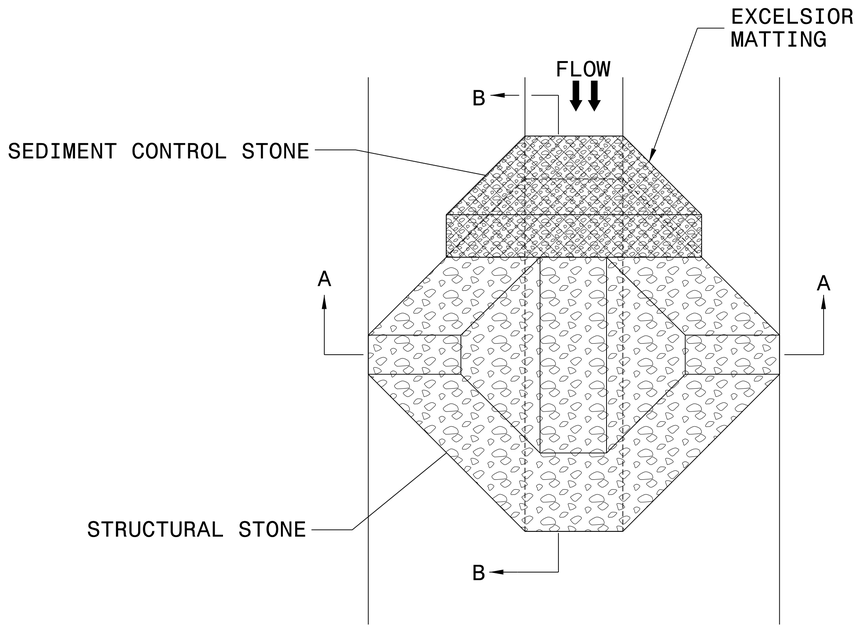


PLAN

NOTES:

INSTALL TEMPORARY ROCK SILT CHECK TYPE A IN ACCORDANCE WITH ROADWAY STANDARD DRAWING NO. 1633.01.

USE EXCELSIOR FOR MATTING MATERIAL AND ANCHOR MATTING SECTION AT TOP AND BOTTOM WITH CLASS B STONE.

PRIOR TO POLYACRYLAMIDE (PAM) APPLICATION, OBTAIN A SOIL SAMPLE FROM PROJECT LOCATION, AND FROM OFFSITE MATERIAL, AND ANALYZE FOR APPROPRIATE PAM FLOCCULANT TO BE APPLIED TO EACH ROCK SILT CHECK.

INITIALLY APPLY 4 OUNCES OF POLYACRYLAMIDE (PAM) TO TOP OF MATTING SECTION AND AFTER EVERY RAINFALL EVENT THAT EQUALS OR EXCEEDS 0.50 INCHES.

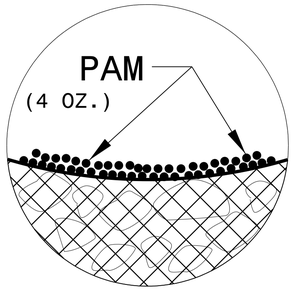


INSET A

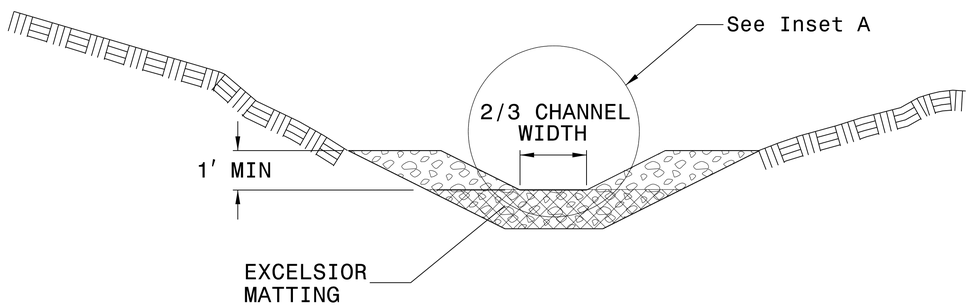


SECTION A-A

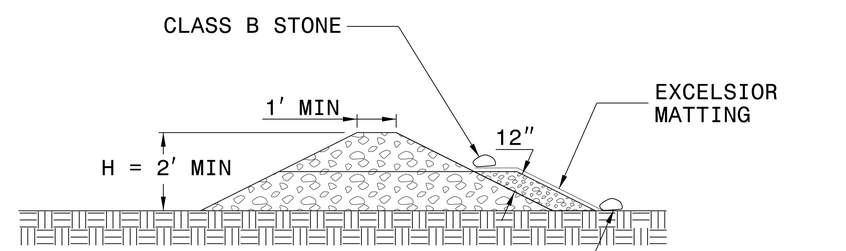


SECTION B-B

NOT TO SCALE

| PROJECT REFERENCE NO. | SHEET NO. |
|---|---|
| 17BP.5.R.50 | EC-03 |
| ROADWAY DESIGN ENGINEER | HYDRAULICS ENGINEER |

DIVISION OF HIGHWAYS
STATE OF NORTH CAROLINA

# SOIL STABILIZATION TIMEFRAMES

| SITE DESCRIPTION | STABILIZATION TIME | TIMEFRAME EXCEPTIONS |
|---|---|---|
| PERIMETER DIKES, SWALES, DITCHES AND SLOPES | 7 DAYS | NONE |
| HIGH QUALITY WATER (HQW) ZONES | 7 DAYS | NONE |
| SLOPES STEEPER THAN 3:1 | 7 DAYS | IF SLOPES ARE 10' OR LESS IN LENGTH AND ARE NOT STEEPER THAN 2:1, 14 DAYS ARE ALLOWED. |
| SLOPES 3:1 OR FLATTER | 14 DAYS | 7 DAYS FOR SLOPES GREATER THAN 50' IN LENGTH. |
| ALL OTHER AREAS WITH SLOPES FLATTER THAN 4:1 | 14 DAYS | NONE, EXCEPT FOR PERIMETERS AND HQW ZONES. |

| PROJECT REFERENCE NO. | SHEET NO. |
|---|---|
| 17BP.5.R.50 | EC-04/CONST.04 |
| R/W SHEET NO. | |
| ROADWAY DESIGN ENGINEER | HYDRAULICS ENGINEER |


STEWART
Firm License No. C-1051
421 Fayetteville St.
Suite 400
Raleigh, NC 27601
T: 919.380.8750
www.stewartinc.com

NC FIRM LICENSE No: F-1148
1151 SE Cary Parkway, Suite 101
Cary NC 27511
(919) 557-9909
ECOLOGICAL ENGINEERING


REVISIONS

8/17/99

## DETAIL 1
SPECIAL CUT DITCH
( Not to Scale)

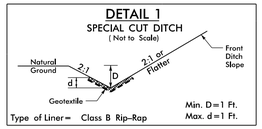


FROM STA. 11+94 TO STA. 13+45 -L- RT
FROM STA. 16+65 TO STA. 18+00 -L- RT

## DETAIL 2
SPECIAL CUT DITCH
( Not to Scale)

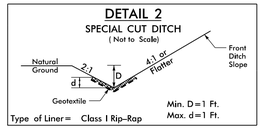


FROM STA. 12+50 TO STA. 13+48 -L- LT

## DETAIL 3
BANK STABILIZATION
( Not to Scale)

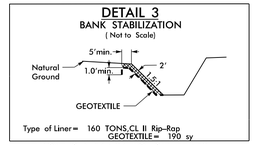


FROM STA. 14+94 TO STA. 15+12 -L-
FROM STA. 15+79 TO STA. 15+99 -L-

CLEARING AND GRUBBING
EROSION CONTROL FOR
CONSTRUCTION SHEET 4

NAD 83/NA 2011

15

10

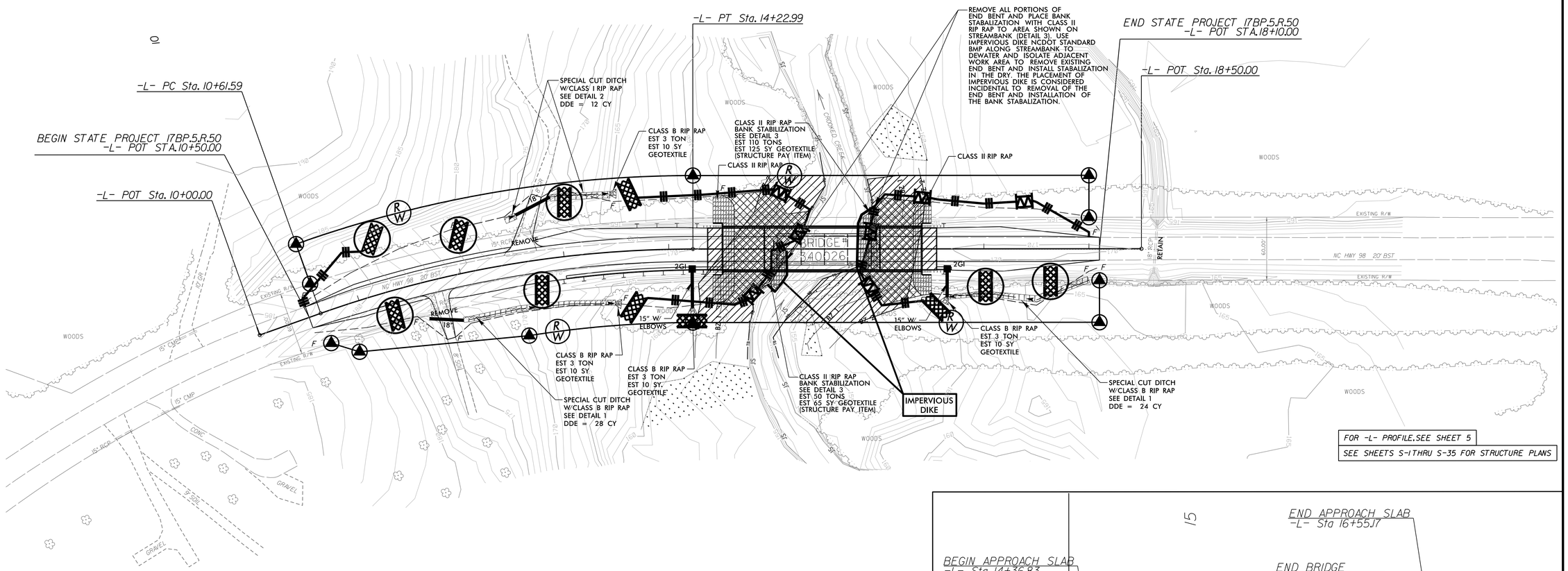


ENVIRONMENTALLY SENSITIVE AREA
SEE PROJECT SPECIAL PROVISIONS

LOCATION OF CONCRETE WASHOUT TO BE DETERMINED BY THE ENGINEER

15

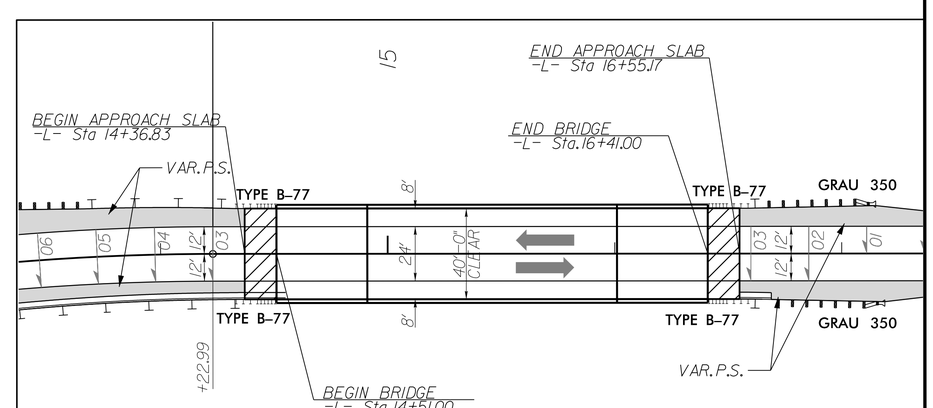


PAVEMENT-BRIDGE RELATIONSHIP SKETCH (NOT TO SCALE)

9/30/2016
17BP.5.R.50_Rev.EC_CG_psh.dgn
USER: Rdeffenbaugh

| PROJECT REFERENCE NO. | SHEET NO. |
|---|---|
| 17BP.5.R.50 | EC-05/CONST.04 |
| R/W SHEET NO. | |
| ROADWAY DESIGN ENGINEER | HYDRAULICS ENGINEER |


STEWART
Firm License No. C-1051
421 Fayetteville St.
Suite 400
Raleigh, NC 27601
T: 919.380.8750
www.stewartinc.com

NC FIRM LICENSE No: F-1148
1151 SE Cary Parkway, Suite 101
Cary NC 27511
(919) 557-9909
ECOLOGICAL ENGINEERING


NAD 83/NA 2011

## DETAIL 1
SPECIAL CUT DITCH
( Not to Scale)

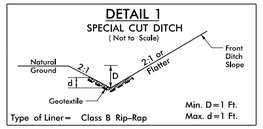


FROM STA. 11+94 TO STA. 13+45 -L- RT
FROM STA. 16+65 TO STA. 18+00 -L- RT

## DETAIL 2
SPECIAL CUT DITCH
( Not to Scale)

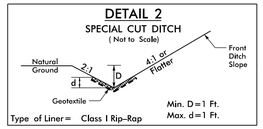


FROM STA. 12+50 TO STA. 13+48 -L- LT

## DETAIL 3
BANK STABILIZATION
( Not to Scale)

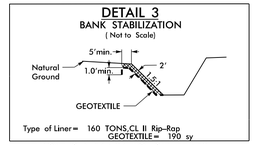


FROM STA. 14+94 TO STA. 15+12 -L-
FROM STA. 15+79 TO STA. 15+99 -L-

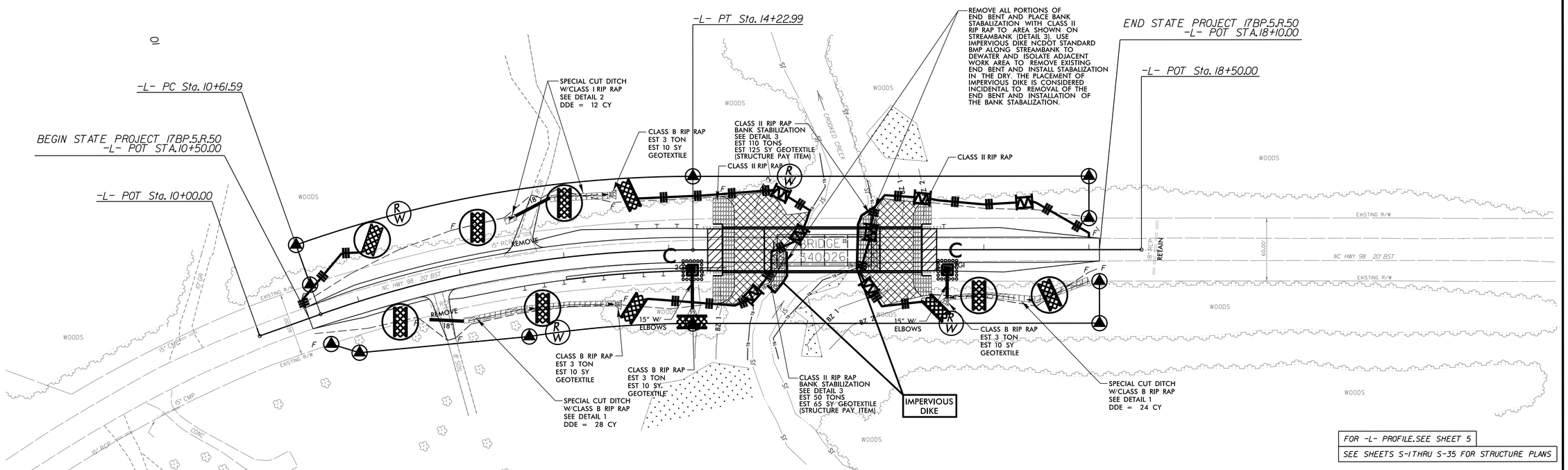


FOR -L- PROFILE.SEE SHEET 5

SEE SHEETS S-1 THRU S-35 FOR STRUCTURE PLANS

LOCATION OF CONCRETE WASHOUT TO BE DETERMINED BY THE ENGINEER

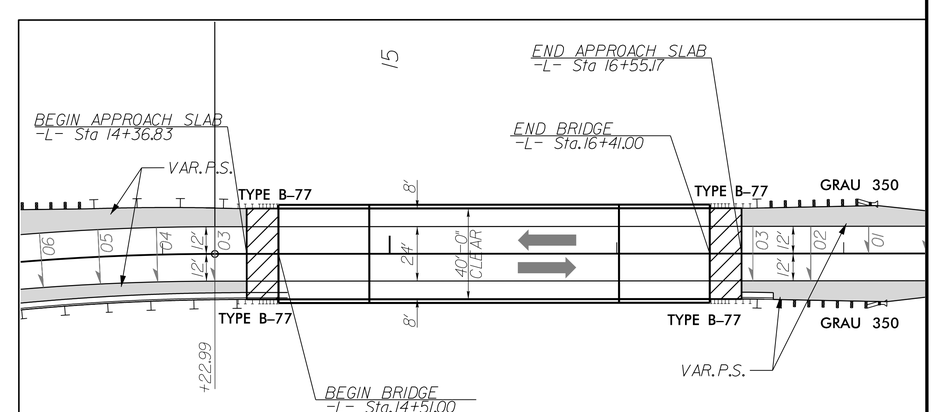


PAVEMENT-BRIDGE RELATIONSHIP SKETCH (NOT TO SCALE)

REVISIONS

8/17/99

9/30/2016
11:42:02 AM
Rev_EC_FINAL_psh.dgn
USERprelim

| STATE | STATE PROJECT REFERENCE NO. | SHEET NO. | TOTAL SHEETS |
|---|---|---|---|
| N.C. | 173P.5.R.50 | RF-1 | |
| STATE PROJ. NO. | F. A. PROJ. NO. | DESCRIPTION | |
| | | | |

# PLANTING DETAILS

## *SEEDLING / LINER BAREROOT PLANTING DETAIL*

### HEALING IN

1. Locate a healing-in site in a shady, well protected area.
2. Excavate a flat bottom trench 12 inches deep and provide drainage.

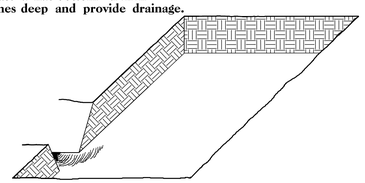

3. Backfill the trench with 2 inches well rotted sawdust. Place a 2 inch layer of well rotted sawdust at a sloping angle at one end of the trench.

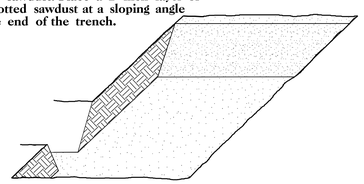

4. Place a single layer of plants against the sloping end so that the root collar is at ground level.

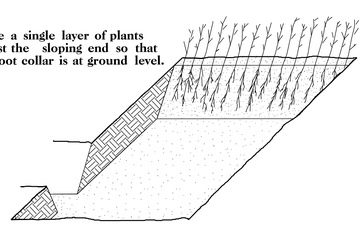

5. Place a 2 inch layer of well rotted sawdust over the roots maintaining a sloping angle.

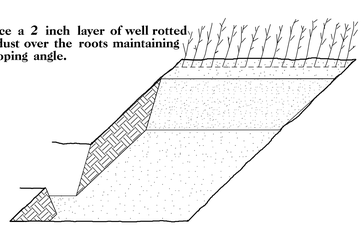

6. Repeat layers of plants and sawdust as necessary and water thoroughly.

### *DIBBLE PLANTING METHOD*
### *USING THE KBC PLANTING BAR*

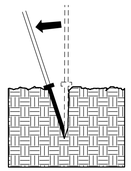

1. Insert planting bar as shown and pull handle toward planter.

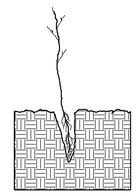

2. Remove planting bar and place seedling at correct depth.

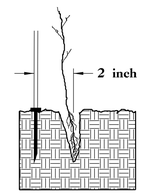


3. Insert planting bar 2 inches toward planter from seedling.

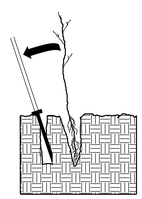

4. Pull handle of bar toward planter, firming soil at bottom.

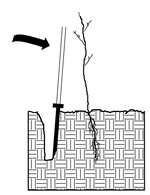

5. Push handle forward firming soil at top.

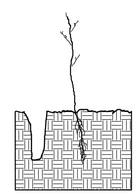

6. Leave compaction hole open. Water thoroughly.

### PLANTING NOTES:

***PLANTING BAG***
*During planting, seedlings shall be kept in a moist canvas bag or similar container to prevent the root systems from drying.*

***KBC PLANTING BAR***
*Planting bar shall have a blade with a triangular cross section, and shall be 12 inches long, 4 inches wide and 1 inch thick at center.*

***ROOT PRUNING***
*All seedlings shall be root pruned, if necessary, so that no roots extend more than 10 inches below the root collar.*

# REFORESTATION

☐ ***TREE REFORESTATION SHALL BE PLANTED 6 FT. TO 10 FT. ON CENTER, RANDOM SPACING, AVERAGING 8 FT. ON CENTER, APPROXIMATELY 680 PLANTS PER ACRE.***

**REFORESTATION**

MIXTURE, TYPE, SIZE, AND FURNISH SHALL CONFORM TO THE FOLLOWING:

| | | | |
|---|---|---|---|
| *25%* | ***LIRIODENDRON TULIPIFERA*** | ***TULIP POPLAR*** | **12 in – 18 in 3R** |
| *25%* | ***PLATANUS OCCIDENTALIS*** | ***AMERICAN SYCAMORE*** | **12 in – 18 in 3R** |
| *25%* | ***FRAXINUS PENNSYLVANICA*** | ***GREEN ASH*** | **12 in – 18 in 3R** |
| *25%* | ***BETULA NIGRA*** | ***RIVER BIRCH*** | **12 in – 18 in 3R** |

# REFORESTATION DETAIL SHEET

N.C.D.O.T. - ROADSIDE ENVIRONMENTAL UNIT

TIP PROJECT: 17BP.5.R.50

| T.I.P. NO. | SHEET NO. |
|---|---|
| 17BP.5.R.50 | UO–1 |

STATE OF NORTH CAROLINA
DIVISION OF HIGHWAYS

# UTILITIES BY OTHERS PLANS
# FRANKLIN COUNTY

**LOCATION: BRIDGE NO. 26 OVER CROOKED CREEK ON NC 98**

**TYPE OF WORK: PERMANENT FIBER OPTIC RELOCATION**

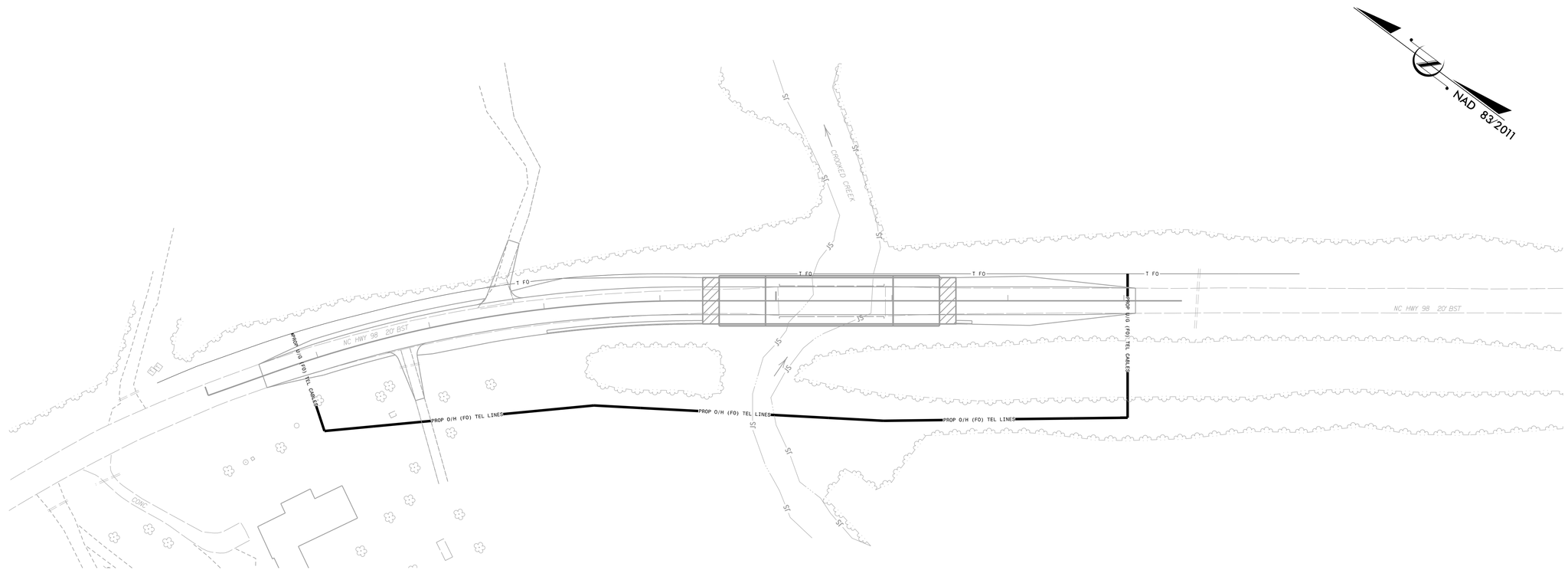


**GRAPHIC SCALES**

50 25 0 50 100
PLANS

50 25 0 50 100
PROFILE (HORIZONTAL)

10 5 0 10 20
PROFILE (VERTICAL)

## INDEX OF SHEETS


| SHEET NO. | DESCRIPTION |
|---|---|
| UO–1 | TITLE SHEET |
| UO–2 | UTILITY BY OTHERS PLAN SHEET |


## UTILITY OWNERS ON PROJECT

(1) CENTURY LINK – FIBER OPTIC


PREPARED IN THE OFFICE OF:

STEWART
421 FAYETTEVILLE ST, STE 400
RALEIGH, NC 27601
T 919.380.8750
Firm License #: C-1051
www.stewartinc.com
PROJECT #:B14001.03

DAVID RUGGLES, PE PROJECT ENGINEER
MICHAEL BURNS, EI PROJECT DESIGN ENGINEER



09/08/98
2/14/2017
U:\RGY_UT\Proj\340026_utl_tsh.dgn
USERFrkeys

| PROJECT REFERENCE NO. | SHEET NO. |
|---|---|
| 17BP.5.R.50 | UO-2 |

# UTILITIES BY OTHERS

NOTE:
ALL PROPOSED UTILITY WORK SHOWN ON THIS SHEET WILL BE DONE BY OTHERS

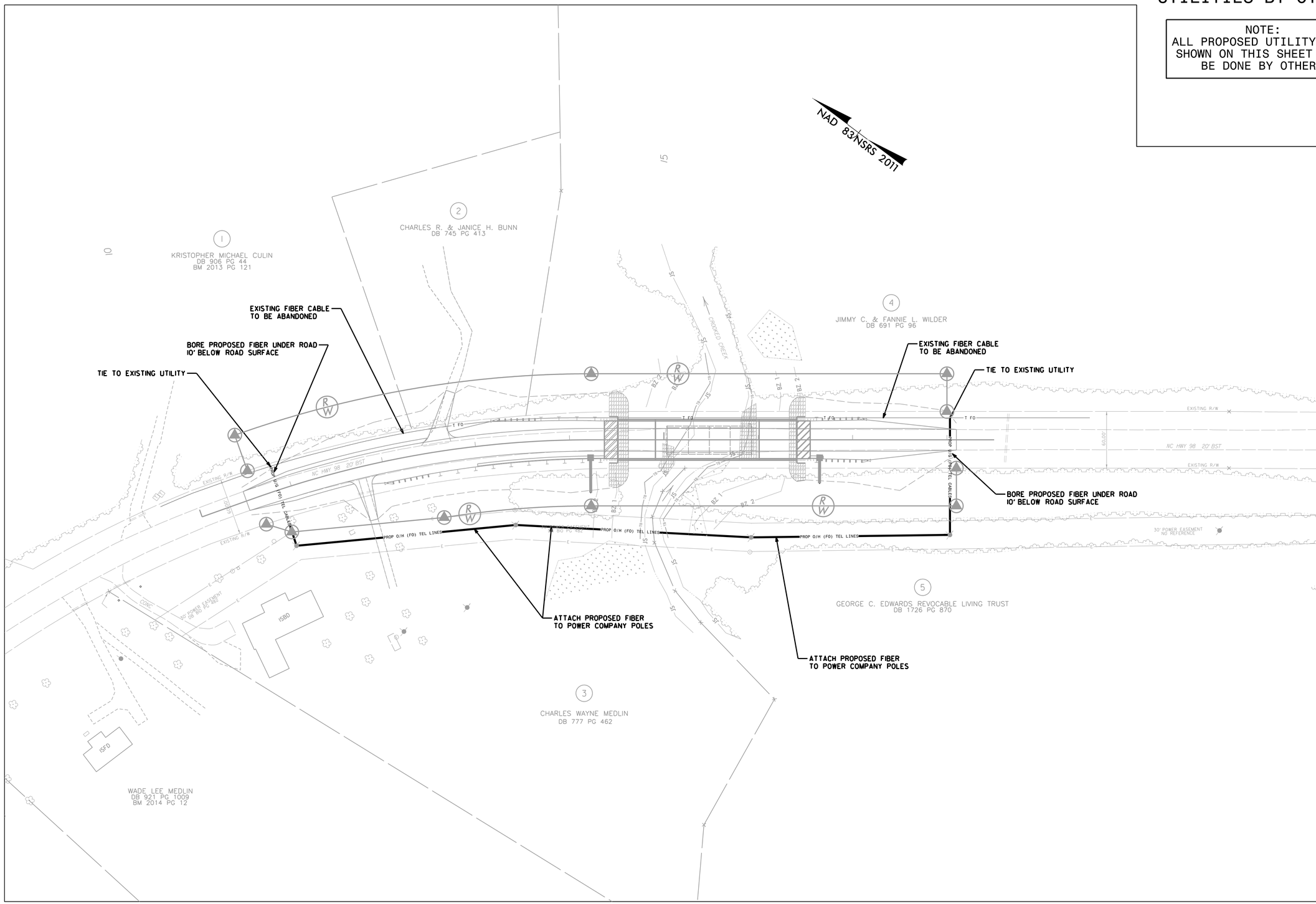


8/17/99

2/14/2017
17BP.5.R.50_340026_utl_psh04.dgn
USER: Reis

| PROJ. REFERENCE NO. | SHEET NO. |
|---|---|
| 17BP.5.R.50 | X-1A |

# STATE OF NORTH CAROLINA
# DIVISION OF HIGHWAYS

NOTE: EMBANKMENT COLUMN DOES NOT INCLUDE BACKFILL FOR UNDERCUT

## *CROSS-SECTION SUMMARY*

| Station<br>L | Uncl. Exc.<br>(cu. yd.) | Embt<br>(cu. yd.) |
|---|---|---|
| 10+50.00 | 0 | 0 |
| 11+00.00 | 26 | 17 |
| 11+50.00 | 8 | 88 |
| 12+00.00 | 7 | 219 |
| 12+50.00 | 13 | 331 |
| 13+00.00 | 7 | 474 |
| 13+50.00 | 2 | 619 |
| 14+00.00 | 0 | 673 |
| 14+50.00 | 0 | 650 |
| 14+51.00 | 0 | 12 |

| Station<br>L | Uncl. Exc.<br>(cu. yd.) | Embt<br>(cu. yd.) |
|---|---|---|
| 16+41.00 | 0 | 0 |
| 16+50.00 | 1 | 57 |
| 17+00.00 | 19 | 250 |
| 17+50.00 | 49 | 190 |
| 18+00.00 | 52 | 95 |
| 18+10.00 | 7 | 2 |

| 0 2.5 5 | PROJ. REFERENCE NO. | SHEET NO. |
|---|---|---|
| | 17BP.5.R.50 | X-1 |

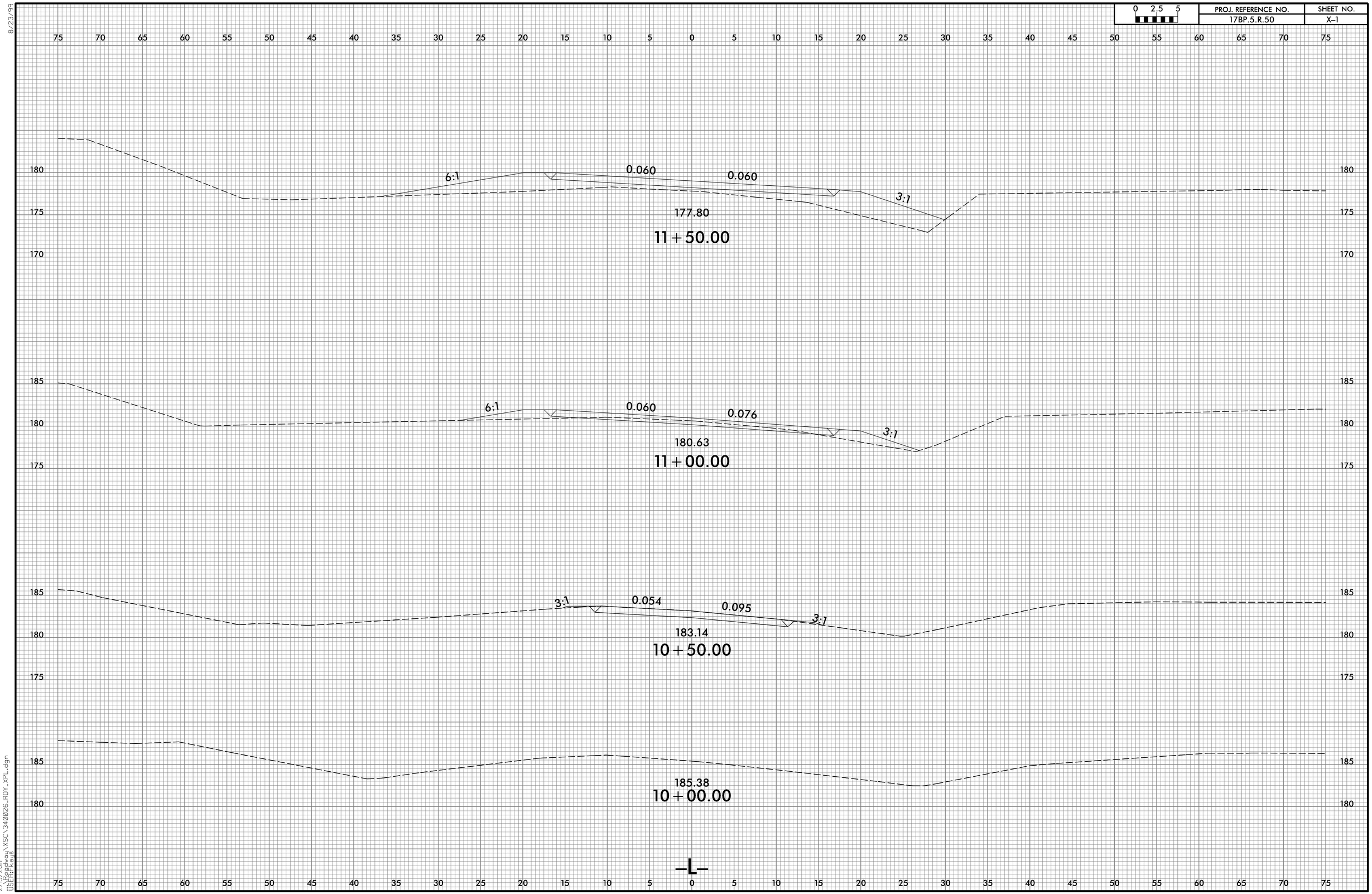


8/23/99

2/13/2017
USER: Pkeys
\\Bedfordway\WSC\340026_RDY_XPL.dgn

| 0 2.5 5 | PROJ. REFERENCE NO. | SHEET NO. |
|---|---|---|
| | 17BP.5.R.50 | X-2 |

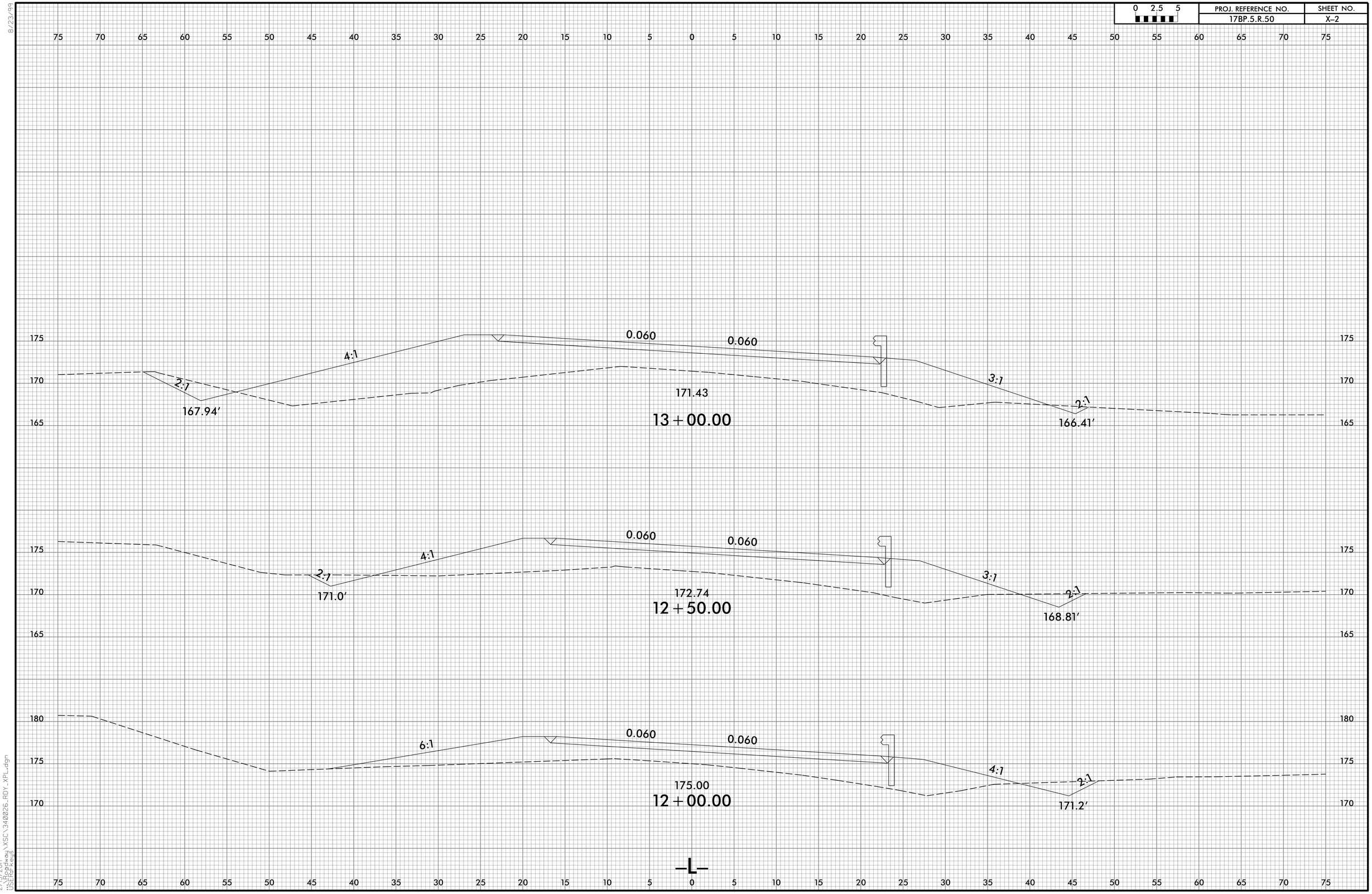


8/23/99

2/13/2017
USER: Keys

| 0 2.5 5 | PROJ. REFERENCE NO. | SHEET NO. |
|---|---|---|
| | 17BP.5.R.50 | X-3 |

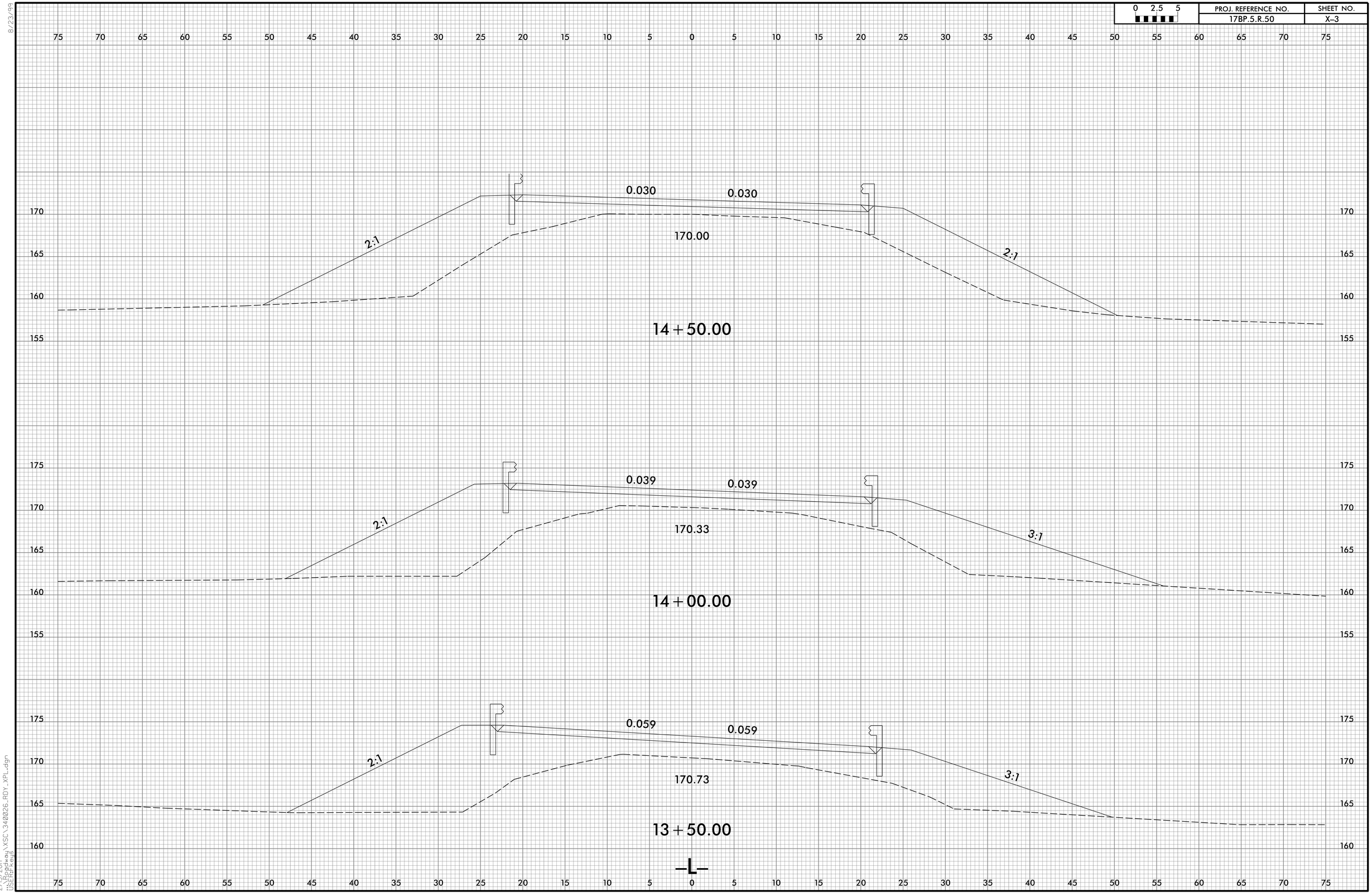


8/23/99

2/13/2017
USER: Pkeys

| 0 2.5 5 | PROJ. REFERENCE NO. | SHEET NO. |
|---|---|---|
| | 17BP.5.R.50 | X-4 |

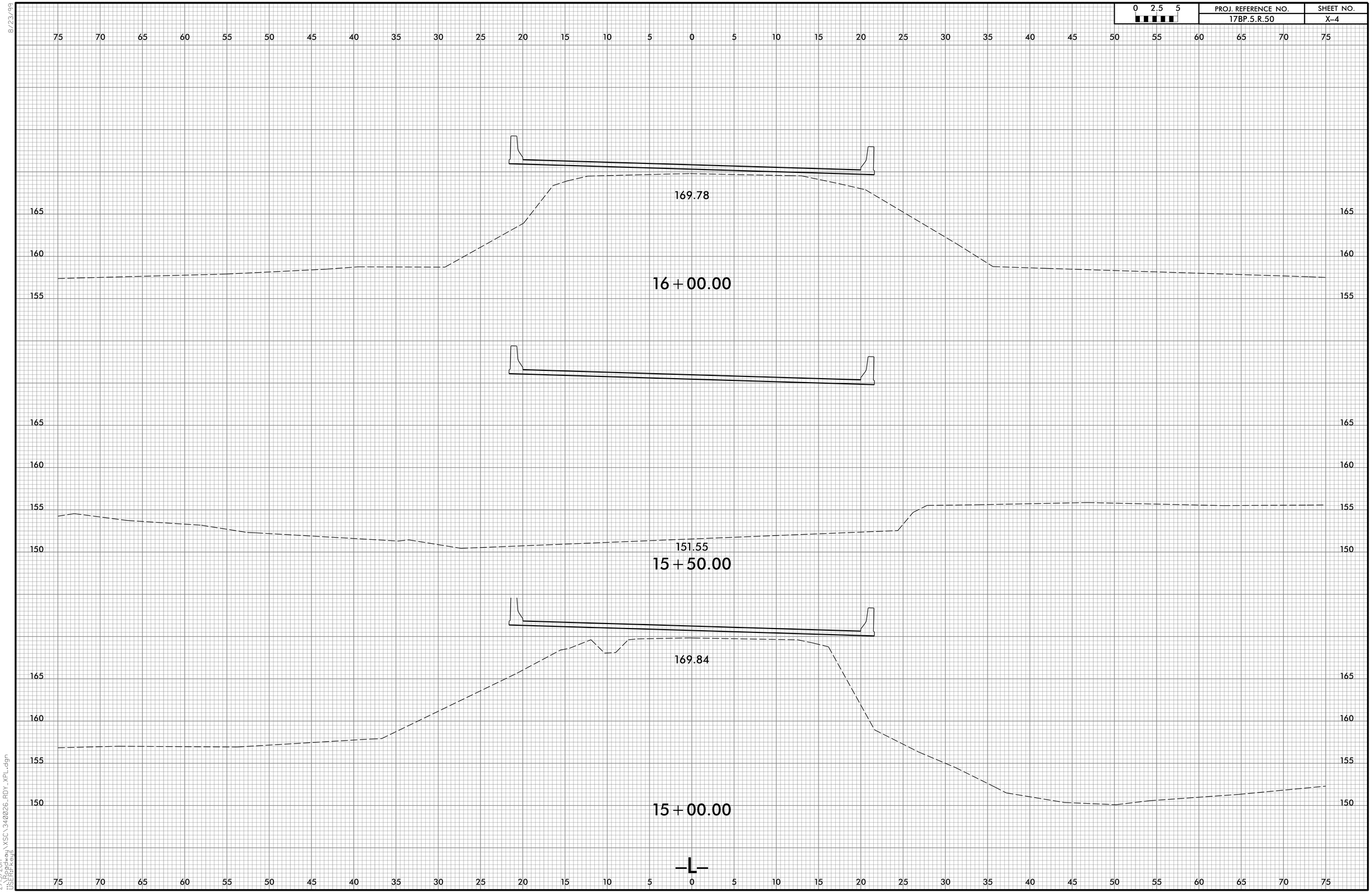


8/23/99

2/13/2017
USER: Keys

| 0 2.5 5 | PROJ. REFERENCE NO. | SHEET NO. |
|---|---|---|
| | 17BP.5.R.50 | X-5 |

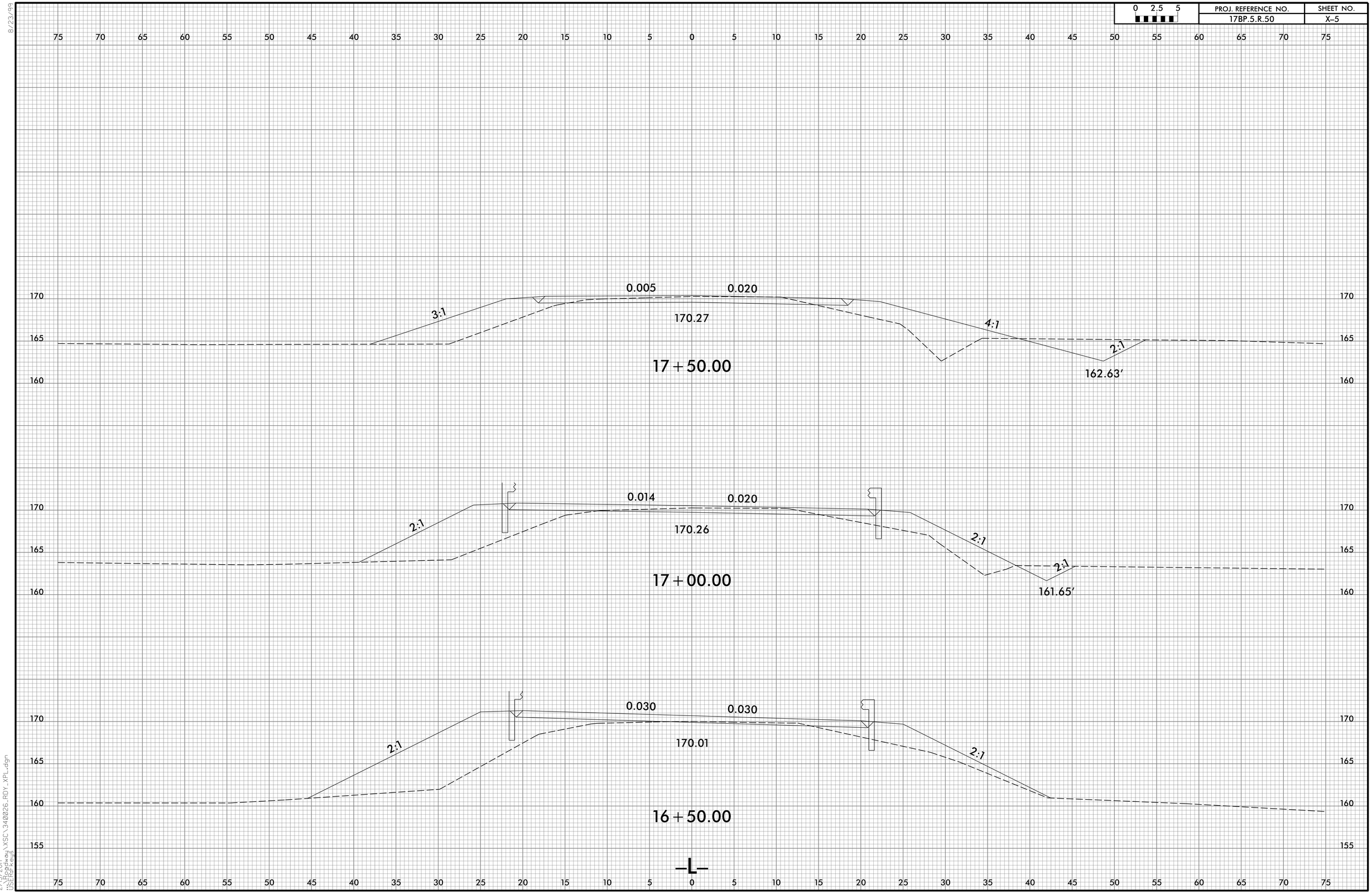


8/23/99

2/13/2017
USER: Pkeys

8/23/99

| 0 2.5 5 | PROJ. REFERENCE NO. | SHEET NO. |
|---|---|---|
| | 17BP.5.R.50 | X-6 |

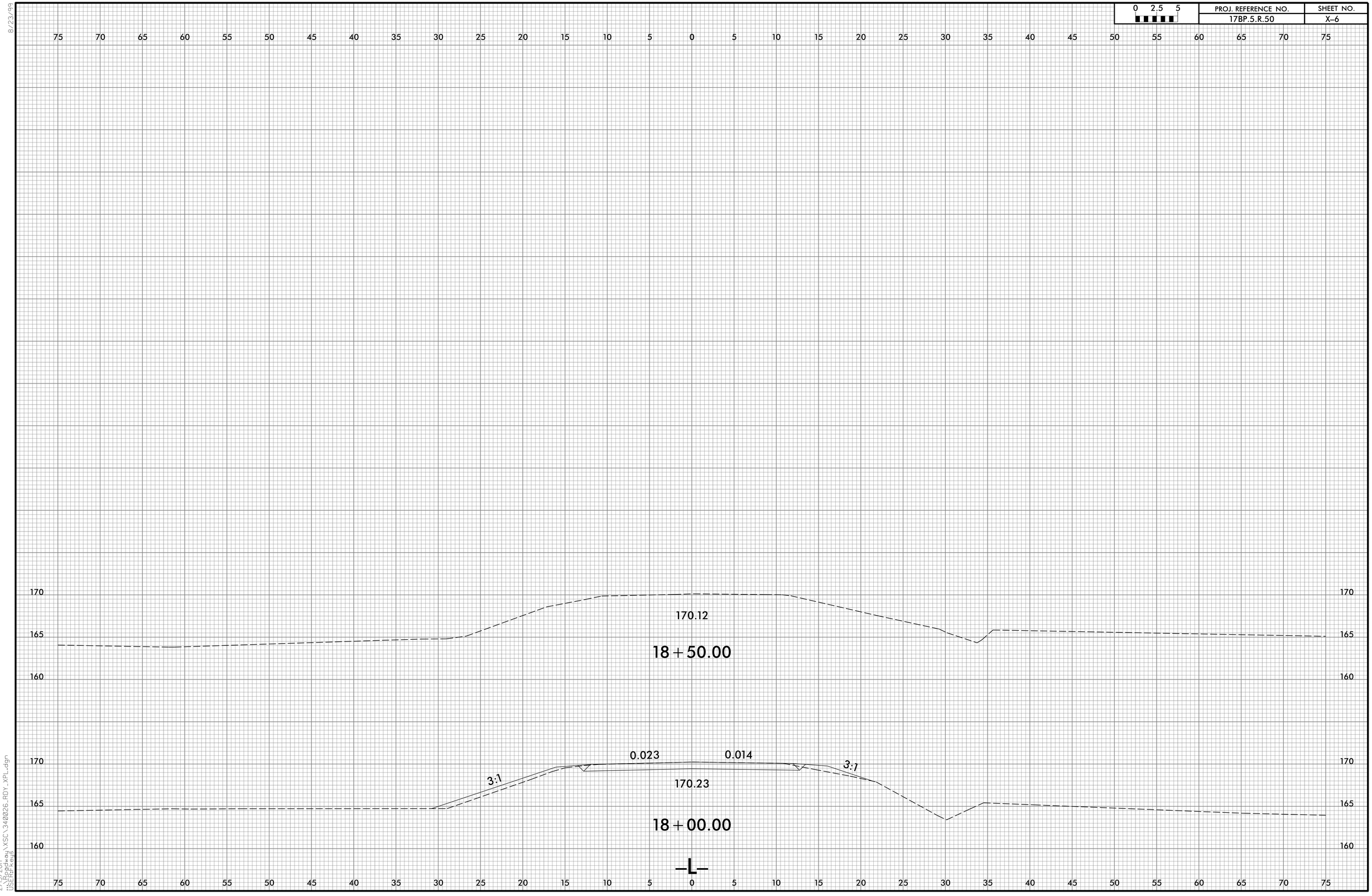


2/13/2017
USER: Pkeys

DocuSign Envelope ID: D287D744-7745-45ED-A608-C74816553493

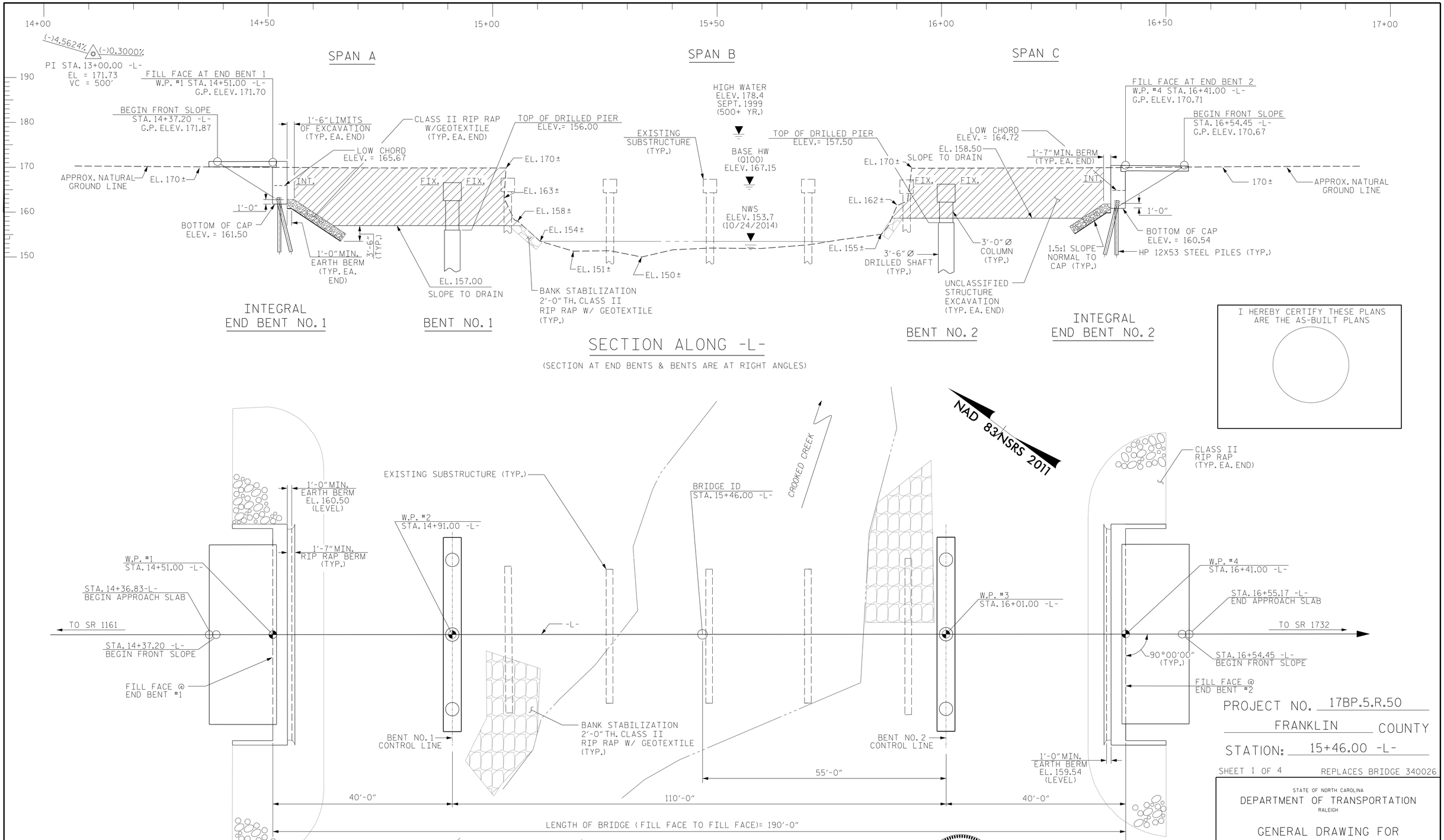


PROJECT NO. 17BP.5.R.50

FRANKLIN COUNTY

STATION: 15+46.00 -L-

SHEET 1 OF 4 REPLACES BRIDGE 340026

STATE OF NORTH CAROLINA
DEPARTMENT OF TRANSPORTATION
RALEIGH

GENERAL DRAWING FOR BRIDGE OVER CROOKED CREEK ON NC 98 BETWEEN SR 1611 AND SR 1732

DocuSigned by: Jeff Loftus
FE51DC02E6794A9...
8/26/2016

NORTH CAROLINA PROFESSIONAL SEAL 041425 ENGINEER JEFFREY M. LOFTUS

DOCUMENT NOT CONSIDERED FINAL UNLESS ALL SIGNATURES COMPLETED

STEWART

Firm License No. C-1051
421 Fayetteville St,
Suite 400
Raleigh, NC 27601
T 919.380.8750
www.stewartinc.com

| REVISIONS | | | | | | | SHEET NO. |
|---|---|---|---|---|---|---|---|
| NO. | BY: | DATE: | NO. | BY: | DATE: | | S-1 |
| 1 | | | 3 | | | | TOTAL SHEETS |
| 2 | | | 4 | | | | 35 |

| | | | |
|---|---|---|---|
| DRAWN BY: | H.ASSFOURA | DATE : | 07/15 |
| CHECKED BY: | D. RUGGLES | DATE : | 10/15 |
| DESIGN ENGINEER OF RECORD: | J. LOFTUS | DATE : | 03/16 |

BRIDGE NO: 720026

3/31/2016
...\400_001_17BP5R50_SMU_GD01.dgn
USER:jloftus

DocuSign Envelope ID: D287D744-7745-45ED-A608-C74816553493

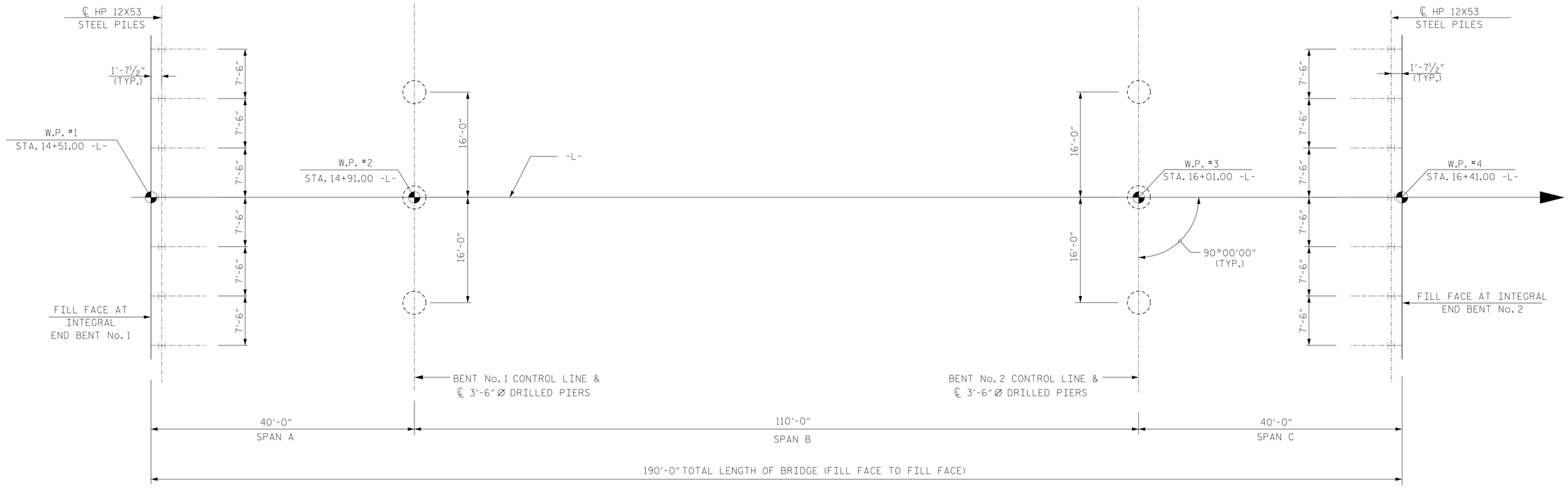


## FOUNDATION LAYOUT

DIMENSIONS LOCATING PILES AND DRILLED PIERS ARE SHOWN TO THE CENTERLINE OF PILES AND DRILLED PIERS.

## FOUNDATION NOTES

1. FOR PILES, SEE GEOTECHNICAL SPECIAL PROVISIONS AND SECTION 450 OF THE STANDARD SPECIFICATIONS.

2. PILES AT END BENT NO. 1 AND END BENT NO. 2 ARE DESIGNED FOR A FACTORED RESISTANCE OF 70 TONS PER PILE.

3. DRIVE PILES AT END BENT NO. 1 AND END BENT NO. 2 TO A REQUIRED DRIVING RESISTANCE OF 120 TONS PER PILE.

4. STEEL H-PILE POINTS ARE REQUIRED FOR STEEL H-PILES AT END BENT NO. 2. FOR STEEL PILE POINTS, SEE SECTION 450 OF THE STANDARD SPECIFICATIONS.

5. FOR DRILLED PIERS, SEE GEOTECHNICAL SPECIAL PROVISIONS AND SECTION 411 OF THE STANDARD SPECIFICATIONS.

6. DRILLED PIERS AT BENT NO. 1 ARE DESIGNED FOR A FACTORED RESISTANCE OF 490 TONS PER PIER. CHECK FIELD CONDITIONS FOR THE REQUIRED TIP RESISTANCE OF 120 TSF.

7. INSTALL DRILLED PIERS AT BENT NO. 1 TO A TIP ELEVATION NO HIGHER THAN 122.0 FT (LT), 121.0 FT (CTR.), 120.0 FT (RT), RESPECTIVELY, WITH THE REQUIRED TIP RESISTANCE AND A PENETRATION OF AT LEAST 6 FT INTO ROCK AS DEFINED BY ARTICLE 411-1 OF THE STANDARD SPECIFICATIONS.

8. PERMANENT STEEL CASINGS MAY BE REQUIRED FOR DRILLED PIERS AT BENT NO. 1. DO NOT EXTEND PERMANENT CASINGS BELOW ELEVATION 130.0 FT WITHOUT PRIOR APPROVAL FROM THE ENGINEER.

9. IF REQUIRED, INSTALL PERMANENT STEEL CASINGS AT BENT NO. 1 BY VIBRATING, SCREWING OR DRIVING PERMANENT CASINGS BEFORE EXCAVATING OR DISTURBING ANY MATERIAL BELOW ELEVATION 146.9 FT.

10. DRILLED PIERS AT BENT NO. 2 ARE DESIGNED FOR A FACTORED RESISTANCE OF 540 TONS PER PIER. CHECK FIELD CONDITIONS FOR THE REQUIRED TIP RESISTANCE OF 130 TSF.

11. INSTALL DRILLED PIERS AT BENT NO. 2 TO A TIP ELEVATION NO HIGHER THAN 138.0 FT (LT), 134.0 FT (CTR.), 130.0 FT (RT), RESPECTIVELY, WITH THE REQUIRED TIP RESISTANCE AND A PENETRATION OF AT LEAST 6 FT INTO ROCK AS DEFINED BY ARTICLE 411-1 OF THE STANDARD SPECIFICATIONS.

12. PERMANENT STEEL CASINGS MAY BE REQUIRED FOR DRILLED PIERS AT BENT NO. 2. DO NOT EXTEND PERMANENT CASINGS BELOW ELEVATIONS 146.0 FT (LT), 144 FT(CTR.), AND 141.0 FT (RT), RESPECTIVELY, WITHOUT PRIOR APPROVAL FROM THE ENGINEER.

13. IF REQUIRED, INSTALL PERMANENT STEEL CASINGS AT BENT NO. 2 BY VIBRATING, SCREWING OR DRIVING PERMANENT CASINGS BEFORE EXCAVATING OR DISTURBING ANY MATERIAL BELOW ELEVATION 148.8 FT.

14. THE SCOUR CRITICAL ELEVATIONS FOR BENT NO. 1 AND BENT NO. 2 ARE ELEVATIONS 145.0 FT AND 147.0 FT, RESPECTIVELY. SCOUR CRITICAL ELEVATIONS ARE USED TO MONITOR POSSIBLE SCOUR PROBLEMS DURING THE LIFE OF THE STRUCTURE.

15. CSL TUBES ARE REQUIRED AND CSL TESTING MAY BE REQUIRED FOR DRILLED PIERS. THE ENGINEER WILL DETERMINE THE NEED FOR CSL TESTING. FOR CSL TESTING, SEE SECTION 411 OF THE STANDARD SPECIFICATIONS.

16. SID INSPECTIONS MAY BE REQUIRED FOR DRILLED PIERS. THE ENGINEER WILL DETERMINE THE NEED FOR SID INSPECTIONS. FOR SID INSPECTIONS, SEE SECTION 411 OF THE STANDARD SPECIFICATIONS.

DocuSigned by: Jeff Loftus FE51DC02E6704A9... 8/26/2016

NORTH CAROLINA PROFESSIONAL SEAL 041425 ENGINEER JEFFREY M. LOFTUS

DOCUMENT NOT CONSIDERED FINAL UNLESS ALL SIGNATURES COMPLETED

STEWART
Firm License No. C-1051
421 Fayetteville St, Suite 400
Raleigh, NC 27601
T 919.380.8750
www.stewartinc.com

PROJECT NO. 17BP.5.R.50
FRANKLIN COUNTY
STATION: 15+46.00 -L-

SHEET 2 OF 4

STATE OF NORTH CAROLINA
DEPARTMENT OF TRANSPORTATION
RALEIGH

GENERAL DRAWING FOR BRIDGE OVER CROOKED CREEK ON NC 98 BETWEEN SR 1611 AND SR 1732

| REVISIONS | | | | | | SHEET NO. |
|---|---|---|---|---|---|---|
| NO. | BY: | DATE: | NO. | BY: | DATE: | S-2 |
| 1 | | | 3 | | | TOTAL SHEETS |
| 2 | | | 4 | | | 35 |

| | | | |
|---|---|---|---|
| DRAWN BY: | H.ASSFOURA | DATE : | 07/15 |
| CHECKED BY: | J. LOFTUS | DATE : | 10/15 |
| DESIGN ENGINEER OF RECORD: | J. LOFTUS | DATE : | 03/16 |

BRIDGE NO: 720026
8/26/2016
...\400_002_17BP5R50_SMU_GD02.dgn
USER:jloftus

DocuSign Envelope ID: D287D744-7745-45ED-A608-C74816553493

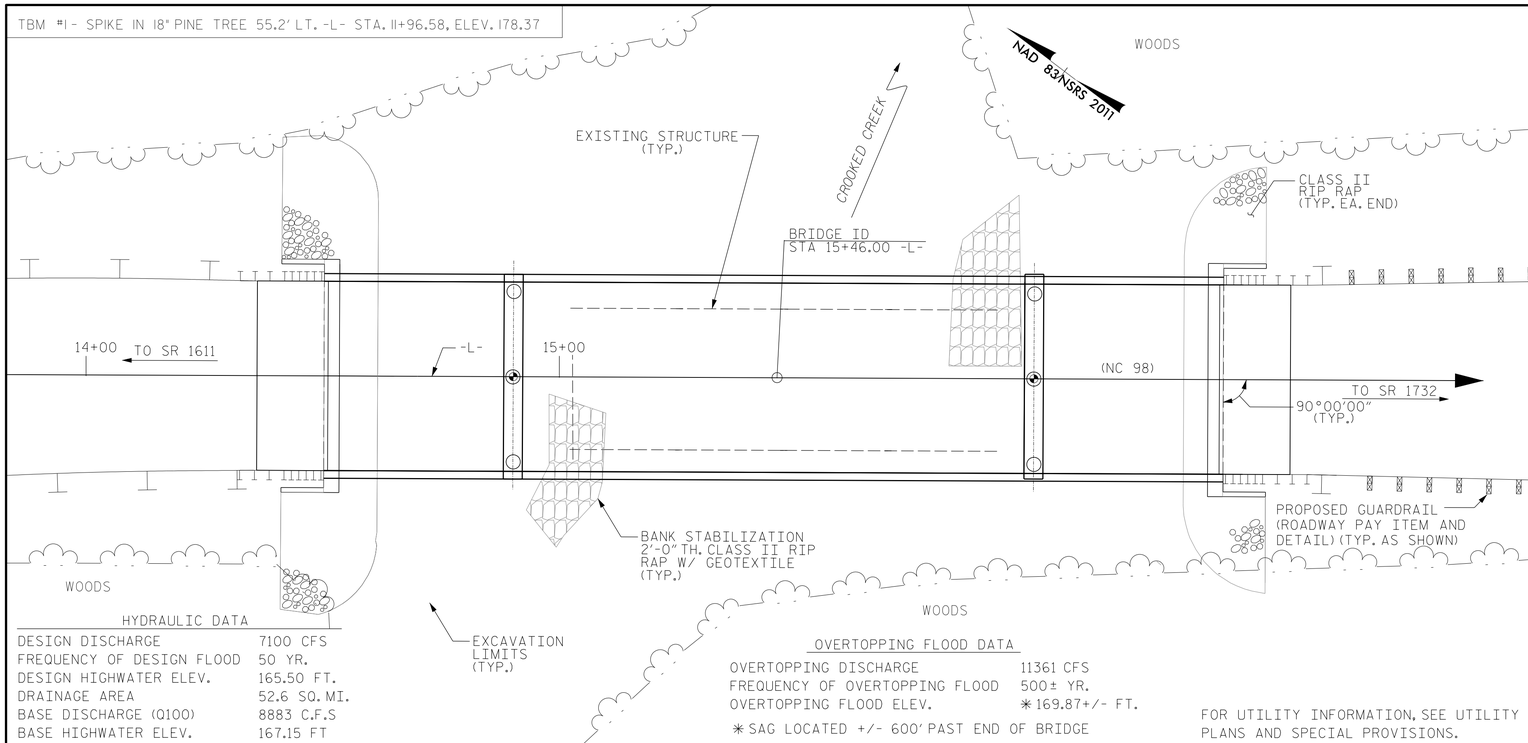


HYDRAULIC DATA

| | |
|---|---|
| DESIGN DISCHARGE | 7100 CFS |
| FREQUENCY OF DESIGN FLOOD | 50 YR. |
| DESIGN HIGHWATER ELEV. | 165.50 FT. |
| DRAINAGE AREA | 52.6 SQ. MI. |
| BASE DISCHARGE (Q100) | 8883 C.F.S |
| BASE HIGHWATER ELEV. | 167.15 FT |

OVERTOPPING FLOOD DATA

| | |
|---|---|
| OVERTOPPING DISCHARGE | 11361 CFS |
| FREQUENCY OF OVERTOPPING FLOOD | 500± YR. |
| OVERTOPPING FLOOD ELEV. | ✳169.87+/- FT. |

✳ SAG LOCATED +/- 600' PAST END OF BRIDGE

FOR UTILITY INFORMATION, SEE UTILITY PLANS AND SPECIAL PROVISIONS.

## LOCATION SKETCH

## NOTES

1. ASSUMED LIVE LOAD = HL-93 OR ALTERNATE LOADING
2. THIS BRIDGE HAS BEEN DESIGNED IN ACCORDANCE WITH THE REQUIREMENTS OF THE AASHTO LRFD BRIDGE DESIGN SPECIFICATIONS
3. THIS BRIDGE IS LOCATED IN SEISMIC ZONE 1.
4. THIS STRUCTURE HAS BEEN DESIGNED IN ACCORDANCE WITH "HEC 18 - EVALUATING SCOUR AT BRIDGES."
5. THE SUBSTRUCTURE OF THE EXISTING BRIDGE INDICATED ON THE PLANS IS FROM THE BEST INFORMATION AVAILABLE. THIS INFORMATION IS SHOWN FOR THE CONVENIENCE OF THE CONTRACTOR. THE CONTRACTOR SHALL HAVE NO CLAIM WHATSOEVER AGAINST THE DEPARTMENT OF TRANSPORTATION FOR ANY DELAYS OR ADDITIONAL COST INCURRED BASED ON DIFFERENCE BETWEEN THE EXISTING BRIDGE SUBSTRUCTURE SHOWN ON THE PLANS AND THE ACTUAL CONDITIONS AT THE PROJECT SITE.
6. THE EXISTING STRUCTURE CONSISTING OF BRIDGE 340026 OF FOUR SPANS (22'-9", 22'-0", 22'-1", & 22'-9"); REINFORCED CONCRETE FLOOR ON I BEAMS; 25'-0" CLEAR ROADWAY WIDTH SUPPORTED ON TIMBER CAPS AND PILES WITH CRUTCH BENTS AND LOCATED AT THE PROPOSED STRUCTURE SHALL BE REMOVED IN ITS ENTIRETY. THE EXISTING BRIDGE IS PRESENTLY POSTED FOR LOAD LIMIT. SHOULD THE STRUCTURAL INTEGRITY OF THE BRIDGE DETERIORATE DURING CONSTRUCTION OF THE PROPOSED BRIDGE, A LOAD LIMIT MAY BE REDUCED AS FOUND NECESSARY DURING THE LIFE OF THE PROJECT. FOR EXISTING BRIDGE ITEMS TO BE SALVAGED, SEE SPECIAL PROVISIONS.
7. REMOVAL OF THE EXISTING BRIDGE SHALL BE PERFORMED IN A MANNER THAT PREVENTS DEBRIS FROM FALLING INTO THE WATER. THE CONTRACTOR SHALL SUBMIT DEMOLITION PLANS FOR REVIEW AND REMOVE THE BRIDGE IN ACCORDANCE WITH ARTICLE 402-2 OF THE STANDARD SPECIFICATIONS.
8. FOR OTHER DESIGN DATA AND GENERAL NOTES, SEE SHEET SN.
9. FOR SUBMITTAL OF WORKING DRAWINGS, SEE SPECIAL PROVISIONS.
10. FOR FALSEWORK AND FORMWORK, SEE SPECIAL PROVISIONS.
11. FOR CRANE SAFETY, SEE SPECIAL PROVISIONS.
12. FOR GROUT FOR STRUCTURES, SEE SPECIAL PROVISIONS.
13. FOR EROSION CONTROL MEASURES, SEE EROSION CONTROL PLANS.
14. FOR ASBESTOS ASSESSMENT, SEE SPECIAL PROVISIONS.
15. REMOVABLE FORMS MAY BE USED IN LIEU OF METAL STAY-IN-PLACE FORMS IN ACCORDANCE WITH ARTICLE 420-3 OF THE STANDARD SPECIFICATIONS.

## TOTAL BILL OF MATERIAL

| | REMOVAL OF EXISTING STRUCTURE | 3'-6" DIA. DRILLED PIERS IN SOIL | 3'-6" DIA. DRILLED PIERS NOT IN SOIL | PERMANENT STEEL CASING FOR 3'-6" DIA. DRILLED PIER | SID INSPECTION | CSL TESTING | UNCLASSIFIED STRUCTURE EXCAVATION | REINFORCED CONCRETE DECK SLAB | GROOVING BRIDGE FLOOR | CLASS A CONCRETE | BRIDGE APPROACH SLABS | REINF. STEEL | SPIRAL COLUMN REINFORCING STEEL | 54" PRESTRESSED CONCRETE GIRDERS | | HP 12X53 STEEL PILES | | STEEL PILE POINTS | CONCRETE BARRIER RAIL | RIP RAP CLASS II (2'-0" THICK) | GEOTEXTILE FOR DRAINAGE | ELASTOMERIC BEARINGS | ASBESTOS ASSESSMENT |
|---|---|---|---|---|---|---|---|---|---|---|---|---|---|---|---|---|---|---|---|---|---|---|---|
| | LUMP SUM | LIN. FT. | LIN. FT. | LIN. FT. | EACH | EACH | LUMP SUM | SQ. FT. | SQ. FT. | CY. YDS. | LUMP SUM | LBS | LBS | NO. | LIN. FT. | No. | LIN. FT. | EACH | LIN. FT. | TON | SQ. YDS. | LUMP SUM | LUMP SUM |
| SUPERSTRUCTURE | | | | | | | | 8,218 | 8,029 | | LUMP SUM | | | 15 | 932.5 | | | | 376.67 | | | LUMP SUM | |
| END BENT No. 1 | | | | | | | LUMP SUM | | | 32.8 | | 5,443 | | | | 7 | 192.5 | | | 213.0 | 246.1 | | |
| BENT No. 1 | | 81.0 | 24.0 | 81.0 | | | | | | 33.1 | | 17,653 | 2,559 | | | | | | | | | | |
| BENT No. 2 | | 44.5 | 26.0 | 44.5 | | | | | | 31.6 | | 13,955 | 1,715 | | | | | | | | | | |
| END BENT No. 2 | | | | | | | LUMP SUM | | | 32.8 | | 5,443 | | | | 7 | 70 | 7 | | 172.7 | 193.5 | | |
| TOTAL | LUMP SUM | 125.5 | 50.0 | 125.5 | 2 | 2 | LUMP SUM | 8,218 | 8,029 | 130.3 | LUMP SUM | 42,494 | 4,274 | 15 | 932.5 | 14 | 262.5 | 7 | 376.67 | 385.7 | 439.6 | LUMP SUM | LUMP SUM |

15. FOR PLACING LOAD ON STRUCTURE MEMBERS, SEE SPECIAL PROVISIONS
16. INASMUCH AS THE PAINT SYSTEM ON THE EXISTING STRUCTURAL STEEL CONTAINS LEAD, THE CONTRACTOR'S ATTENTION IS DIRECTED TO ARTICLE 107-1 OF THE STANDARD SPECIFICATIONS. ANY COSTS RESULTING FROM COMPLIANCE WITH APPLICABLE STATE OR FEDERAL REGULATIONS PERTAINING TO HANDLING OF MATERIALS CONTAINING LEAD BASED PAINT SHALL BE INCLUDED IN THE BID PRICE FOR "REMOVAL OF EXISTING STRUCTURE."
17. THE CLASS AA CONCRETE IN THE BRIDGE DECK SHALL CONTAIN FLY ASH OR GROUND GRANULATED BLAST FURNACE SLAG AT THE SUBSTITUTION RATE SPECIFIED IN ARTICLE 1024-1 AND IN ACCORDANCE WITH ARTICLES 1024-5 AND 1024-6 OF THE STANDARD SPECIFICATIONS. NO PAYMENT WILL BE MADE FOR THIS SUBSTITUTION AS IT IS CONSIDERED INCIDENTAL TO THE COST OF THE REINFORCED CONCRETE DECK SLAB.
18. NEEDLE BEAMS WILL NOT BE ALLOWED UNLESS OTHERWISE CALLED FOR ON THE PLANS OR APPROVED BY THE ENGINEER.
19. THE MATERIAL SHOWN IN THE CROSS-HATCHED AREA SHALL BE EXCAVATED FOR A DISTANCE OF 55 FT LEFT AND 53 FT RIGHT OF CENTERLINE ROADWAY AS DIRECTED BY THE ENGINEER. THIS WORK WILL BE PAID FOR AT THE CONTRACT LUMP SUM PRICE FOR UNCLASSIFIED STRUCTURE EXCAVATION. SEE SECTION 412 OF THE STANDARD SPECIFICATIONS.
20. THE LOCATION OF THE CONSTRUCTION JOINT IN THE DRILLED PIERS IS BASED ON AN APPROXIMATE GROUND LINE ELEVATION. IF THE CONSTRUCTION JOINT IS ABOVE THE ACTUAL GROUND ELEVATION, THE CONTRACTOR SHALL PLACE THE CONSTRUCTION JOINT 1 FT BELOW THE GROUND LINE.

DocuSigned by: Jeff Loftus FE51DC02E679A42... 8/26/2016

NORTH CAROLINA PROFESSIONAL SEAL 041425 ENGINEER JEFFREY M. LOFTUS

DOCUMENT NOT CONSIDERED FINAL UNLESS ALL SIGNATURES COMPLETED

STEWART
Firm License No. C-1051
421 Fayetteville St,
Suite 400
Raleigh, NC 27601
T 919.380.8750
www.stewartinc.com

PROJECT NO. 17BP.5.R.50
FRANKLIN COUNTY
STATION: 15+46.00 -L-

SHEET 3 OF 4

STATE OF NORTH CAROLINA
DEPARTMENT OF TRANSPORTATION
RALEIGH

GENERAL DRAWING FOR BRIDGE OVER CROOKED CREEK ON NC 98 BETWEEN SR 1611 AND SR 1732

| REVISIONS | | | | | | SHEET NO. |
|---|---|---|---|---|---|---|
| NO. | BY: | DATE: | NO. | BY: | DATE: | S-3 |
| 1 | | | 3 | | | TOTAL SHEETS |
| 2 | | | 4 | | | 35 |

| | | | |
|---|---|---|---|
| DRAWN BY: | H.ASSFOURA | DATE : | 07/15 |
| CHECKED BY: | J. LOFTUS | DATE : | 10/15 |
| DESIGN ENGINEER OF RECORD: | J. LOFTUS | DATE : | 03/16 |

BRIDGE NO: 720026
8/26/2016
...\400_003_17BP5R50_SMU_GD03.dgn
USER: jloftus

DocuSign Envelope ID: D287D744-7745-45ED-A608-C74816553493

# LOAD AND RESISTANCE FACTOR RATING (LRFR) SUMMARY FOR PRESTRESSED CONCRETE GIRDERS

| LEVEL | | VEHICLE | WEIGHT (W) (TONS) | CONTROLLING LOAD RATING (#) | MINIMUM RATING FACTORS (RF) | TONS = W × RF | STRENGTH I LIMIT STATE | | | | | | | | | | | SERVICE III LIMIT STATE | | | | | | COMMENT NUMBER |
|---|---|---|---|---|---|---|---|---|---|---|---|---|---|---|---|---|---|---|---|---|---|---|---|---|
| | | | | | | | LIVE-LOAD FACTORS $\gamma_{(LL)}$ | MOMENT | | | | | SHEAR | | | | | LIVE-LOAD FACTORS $\gamma_{(LL)}$ | MOMENT | | | | | |
| | | | | | | | | DISTRIBUTION FACTORS (DF) | RATING FACTOR | SPAN | GIRDER LOCATION | DISTANCE FROM LEFT END OF SPAN (ft) | DISTRIBUTION FACTORS (DF) | RATING FACTOR | SPAN | GIRDER LOCATION | DISTANCE FROM LEFT END OF SPAN (ft) | | DISTRIBUTION FACTORS (DF) | RATING FACTOR | SPAN | GIRDER LOCATION | DISTANCE FROM LEFT END OF SPAN (ft) | |
| DESIGN LOAD RATING | | HL-93 (INVENTORY) | N/A | 1 | 1.32 | -- | 1.75 | 0.928 | 1.56 | C | I | 18.6 | 0.914 | 1.32 | C | I | 7.0 | 0.80 | 0.789 | 1.38 | B | I | 53.9 | |
| | | HL-93 (OPERATING) | N/A | | 1.69 | -- | 1.35 | 0.928 | 2.03 | C | I | 18.6 | 0.914 | 1.69 | C | I | 7.0 | N/A | -- | -- | -- | -- | -- | |
| | | HS-20 (INVENTORY) | 36.000 | 2 | 1.87 | 67.32 | 1.75 | 0.928 | 1.97 | C | I | 22.5 | 0.789 | 2.26 | B | I | 86.6 | 0.80 | 0.789 | 1.87 | B | I | 53.9 | |
| | | HS-20 (OPERATING) | 36.000 | | 2.56 | 92.16 | 1.35 | 0.928 | 2.56 | C | I | 22.5 | 0.789 | 2.88 | B | I | 86.6 | N/A | -- | -- | -- | -- | -- | |
| LEGAL LOAD RATING | SINGLE VEHICLE (SV) | SNSH | 13.500 | | 3.38 | 45.63 | 1.40 | 0.928 | 4.58 | C | I | 22.5 | 0.914 | 6.83 | C | I | 3.2 | 0.80 | 0.789 | 3.38 | B | I | 53.9 | |
| | | SNGARBS2 | 20.000 | | 2.52 | 50.40 | 1.40 | 0.928 | 3.72 | C | I | 22.5 | 0.914 | 5.31 | C | I | 3.2 | 0.80 | 0.789 | 2.52 | B | I | 53.9 | |
| | | SNAGRIS2 | 22.000 | | 2.39 | 52.58 | 1.40 | 0.928 | 3.67 | C | I | 22.5 | 0.914 | 5.09 | C | I | 3.2 | 0.80 | 0.789 | 2.39 | B | I | 53.9 | |
| | | SNCOTTS3 | 27.250 | | 1.69 | 46.05 | 1.40 | 0.928 | 2.28 | C | I | 18.6 | 0.789 | 3.81 | B | I | 86.6. | 0.80 | 0.789 | 1.69 | B | I | 53.9 | |
| | | SNAGGRS4 | 34.925 | | 1.42 | 49.59 | 1.40 | 0.928 | 2.05 | C | I | 22.5 | 0.789 | 2.94 | B | I | 86.6 | 0.80 | 0.789 | 1.42 | B | I | 53.9 | |
| | | SNS5A | 35.550 | | 1.38 | 49.05 | 1.40 | 0.928 | 2.02 | C | I | 18.6 | 0.789 | 2.76 | B | I | 103.0 | 0.80 | 0.789 | 1.38 | B | I | 53.9 | |
| | | SNS6A | 39.950 | | 1.27 | 50.74 | 1.40 | 0.928 | 1.91 | C | I | 22.5 | 0.789 | 2.54 | B | I | 103.0 | 0.80 | 0.789 | 1.27 | B | I | 53.9 | |
| | | SNS7B | 42.000 | | 1.21 | 50.82 | 1.40 | 0.928 | 1.83 | C | I | 22.5 | 0.789 | 2.45 | B | I | 103.0 | 0.80 | 0.789 | 1.21 | B | I | 53.9 | |
| | TRUCK TRACTOR SEMI-TRAILER (TTST) | TNAGRIT3 | 33.000 | | 1.55 | 51.15 | 1.40 | 0.928 | 1.88 | C | I | 18.6 | 0.789 | 2.46 | B | I | 86.6 | 0.80 | 0.789 | 1.55 | B | I | 53.9 | |
| | | TNT4A | 33.075 | | 1.55 | 51.27 | 1.40 | 0.928 | 1.82 | C | I | 22.5 | 0.789 | 2.40 | B | I | 103.0 | 0.80 | 0.789 | 1.55 | B | I | 53.9 | |
| | | TNT6A | 41.600 | | 1.27 | 52.83 | 1.40 | 0.928 | 1.59 | C | I | 18.6 | 0.789 | 2.00 | B | I | 103.0 | 0.80 | 0.789 | 1.27 | B | I | 53.9 | |
| | | TNT7A | 42.000 | | 1.28 | 53.76 | 1.40 | 0.928 | 1.60 | C | I | 22.5 | 0.789 | 1.97 | B | I | 103.0 | 0.80 | 0.789 | 1.28 | B | I | 53.9 | |
| | | TNT7B | 42.000 | | 1.30 | 54.60 | 1.40 | 0.928 | 1.60 | C | I | 22.5 | 0.789 | 1.89 | B | I | 103.0 | 0.80 | 0.789 | 1.30 | B | I | 53.9 | |
| | | TNAGRIT4 | 43.000 | | 1.26 | 54.18 | 1.40 | 0.928 | 1.56 | C | I | 22.5 | 0.914 | 1.65 | C | I | 7.0 | 0.80 | 0.789 | 1.26 | B | I | 53.9 | |
| | | TNAGT5A | 45.000 | | 1.19 | 53.55 | 1.40 | 0.928 | 1.51 | C | I | 18.6 | 0.789 | 1.81 | B | I | 103.0 | 0.80 | 0.789 | 1.19 | B | I | 53.9 | |
| | | TNAGT5B | 45.000 | 3 | 1.17 | 52.65 | 1.40 | 0.928 | 1.45 | C | I | 22.5 | 0.914 | 1.40 | C | I | 7.0 | 0.80 | 0.789 | 1.17 | B | I | 53.9 | |

## LOAD FACTORS:

| DESIGN LOAD RATING FACTORS | LIMIT STATE | $\gamma_{DC}$ | $\gamma_{DW}$ |
|---|---|---|---|
| | STRENGTH I | 1.25 | 1.50 |
| | SERVICE III | 1.00 | 1.00 |

## NOTES:

MINIMUM RATING FACTORS ARE BASED ON THE STRENGTH I AND SERVICE III LIMIT STATES.

ALLOWABLE STRESSES FOR SERVICE III LIMIT STATE ARE AS REQUIRED FOR DESIGN.

## (#) CONTROLLING LOAD RATING

(1) DESIGN LOAD RATING (HL-93)

(2) DESIGN LOAD RATING (HS-20)

(3) LEGAL LOAD RATING **

** SEE CHART FOR VEHICLE TYPE

## GIRDER LOCATION

I - INTERIOR GIRDER
EL - EXTERIOR LEFT GIRDER
ER - EXTERIOR RIGHT GIRDER

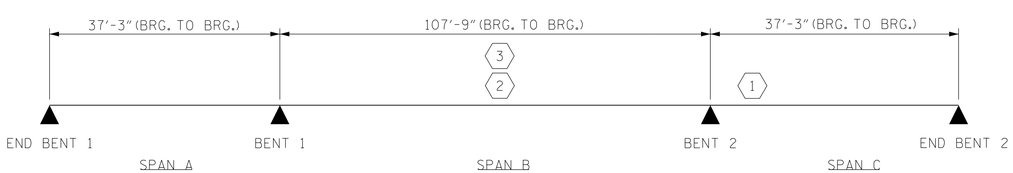


LRFR SUMMARY

DocuSigned by: Jeff Loftus FE51DC02E679AA9... 8/26/2016

NORTH CAROLINA PROFESSIONAL SEAL 041425 ENGINEER JEFFREY M. LOFTUS

DOCUMENT NOT CONSIDERED FINAL UNLESS ALL SIGNATURES COMPLETED

STEWART

Firm License No. C-1051
421 Fayetteville St,
Suite 400
Raleigh, NC 27601
T 919.380.8750
www.stewartinc.com

PROJECT NO. 17BP.5.R.50

FRANKLIN COUNTY

STATION: 15+46.00 -L-

SHEET 4 OF 4

STATE OF NORTH CAROLINA
DEPARTMENT OF TRANSPORTATION
RALEIGH

STANDARD

LRFR SUMMARY FOR PRESTRESSED CONCRETE GIRDERS
(NON-INTERSTATE TRAFFIC)

| REVISIONS | | | | | | SHEET NO. |
|---|---|---|---|---|---|---|
| NO. | BY: | DATE: | NO. | BY: | DATE: | S-4 |
| 1 | | | 3 | | | TOTAL SHEETS |
| 2 | | | 4 | | | 35 |

DRAWN BY: H.ASSFOURA DATE: 07/15
CHECKED BY: J. LOFTUS DATE: 10/15
DESIGN ENGINEER OF RECORD: J. LOFTUS DATE: 03/16

BRIDGE NO: 720026

8/26/2016
...\400_004_17BP5R50_SMU_LRFR04.dgn
USER:jloftus

DocuSign Envelope ID: D287D744-7745-45ED-A608-C74816553493

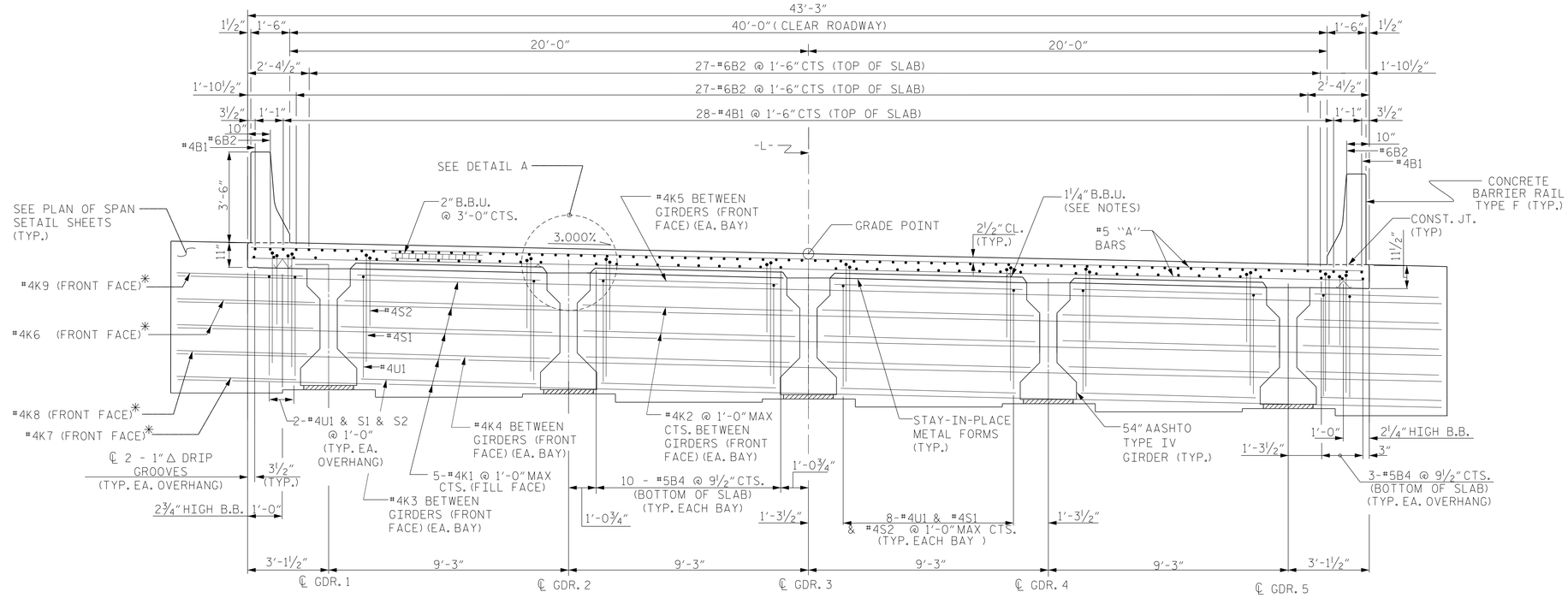


BAR MARKED WITH "*" ARE TYPICAL EACH OVERHANG

# TYPICAL SECTION

SHOWING END-BENT DIAPHRAGMS

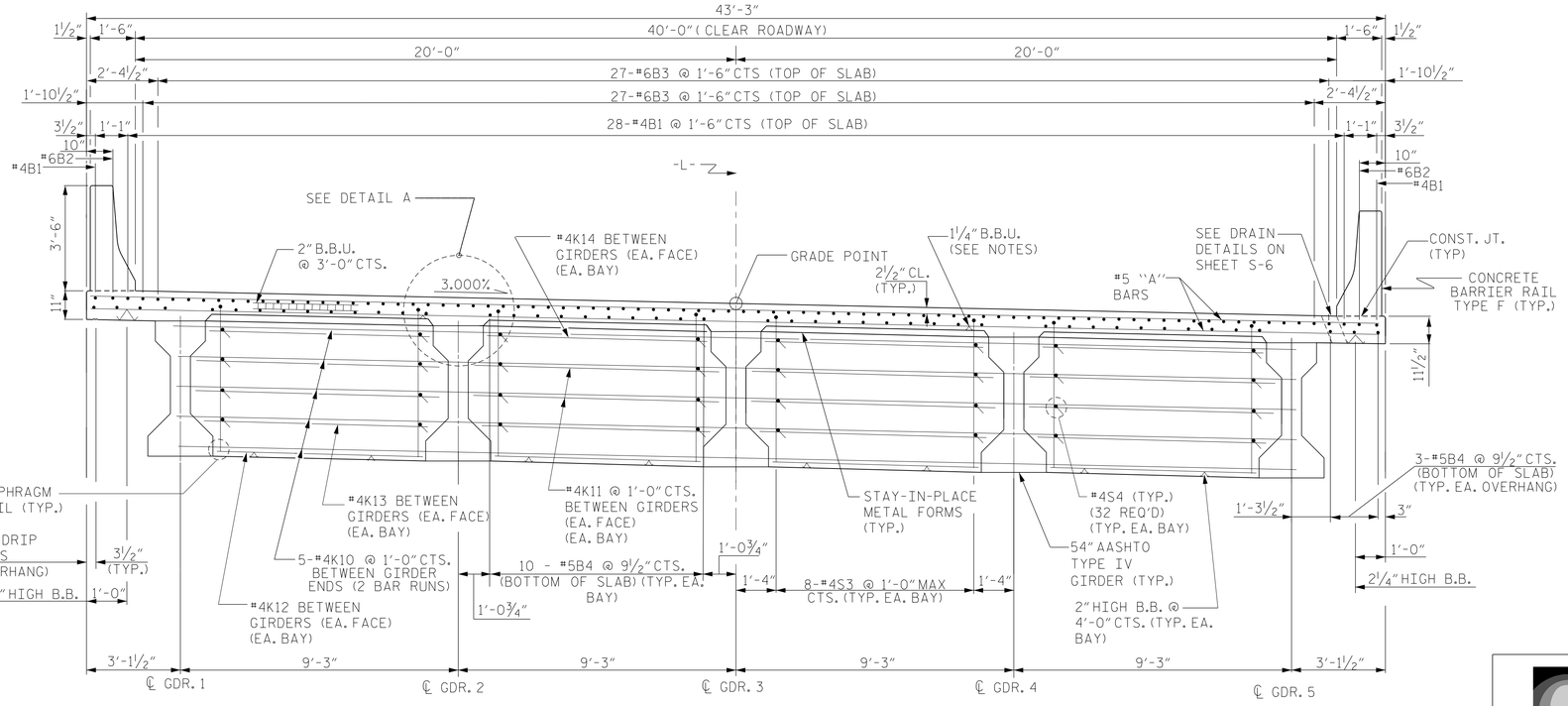


# TYPICAL SECTION

SHOWING INTERIOR BENT DIAPHRAGMS

NOTES:

1. PROVIDE 1¼" HIGH BEAM BOLSTERS UPPER AT 4'-0" CTS. ATOP THE METAL STAY-IN-PLACE FORMS TO SUPPORT THE BOTTOM MAT OF 'A' BARS. WHEN USING REMOVABLE FORMS, PROVIDE CONTINUOUS HIGH CHAIRS FOR METAL DECK (C.H.C.M.) @ 4'-0" CTS. WITH A HEIGHT TO SUPPORT THE BOTTOM MAT OF 'A' BARS A CLEAR DISTANCE OF 2½" ABOVE THE TOP OF THE REMOVABLE FORM.
2. LONGITUDINAL STEEL MAY BE SHIFTED SLIGHTLY, AS NECESSARY, TO AVOID INTERFERENCE WITH STIRRUPS IN PRESTRESSED CONCRETE GIRDERS.
3. BARRIER RAIL IN A CONTINUOUS UNIT SHALL NOT BE CAST UNTIL ALL SLAB CONCRETE IN THE UNIT HAS BEEN CAST AND HAS REACHED A MINIMUM COMPRESSIVE STRENGTH OF 3,000 PSI.

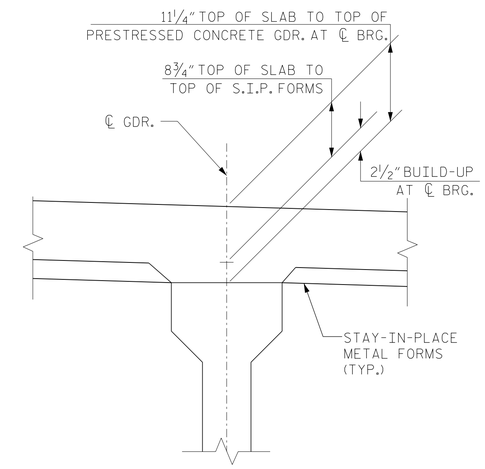


# DETAIL A

PROJECT NO. 17BP.5.R.50

FRANKLIN COUNTY

STATION: 15+46.00 -L-

SHEET 1 OF 2

DocuSigned by: Jeff Loftus FE51DC02E679A43 8/26/2016

NORTH CAROLINA PROFESSIONAL SEAL 041425 ENGINEER JEFFREY M. LOFTUS

DOCUMENT NOT CONSIDERED FINAL UNLESS ALL SIGNATURES COMPLETED

STEWART

Firm License No. C-1051
421 Fayetteville St,
Suite 400
Raleigh, NC 27601
T 919.380.8750
www.stewartinc.com

STATE OF NORTH CAROLINA
DEPARTMENT OF TRANSPORTATION
RALEIGH

SUPERSTRUCTURE TYPICAL SECTION

| REVISIONS | | | | | | SHEET NO. |
|---|---|---|---|---|---|---|
| NO. | BY: | DATE: | NO. | BY: | DATE: | S-5 |
| 1 | | | 3 | | | TOTAL SHEETS |
| 2 | | | 4 | | | 35 |

| | | | |
|---|---|---|---|
| DRAWN BY: | H.ASSFOURA | DATE : | 02/15 |
| CHECKED BY: | D. RUGGLES | DATE : | 09/15 |
| DESIGN ENGINEER OF RECORD: | J. LOFTUS | DATE : | 03/16 |

BRIDGE NO: 720026

8/26/2016
...\400_005_17BP5R50_SMU_TS01.dgn
USER:jloftus

DocuSign Envelope ID: D287D744-7745-45ED-A608-C74816553493

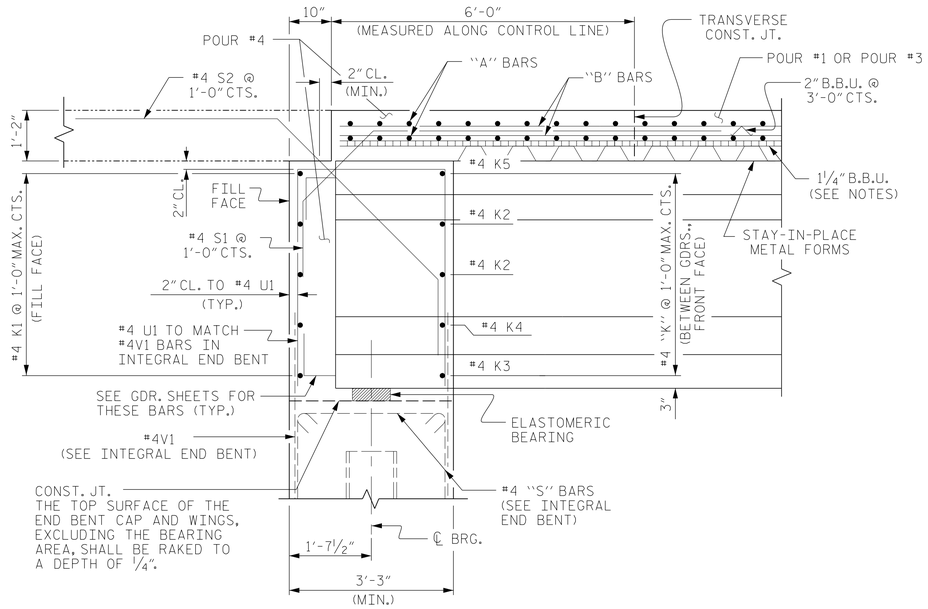


## END OF GIRDER DETAIL AT INTEGRAL END BENTS

BETWEEN GIRDERS SHOWN, OUTSIDE OF GIRDERS SIMILAR

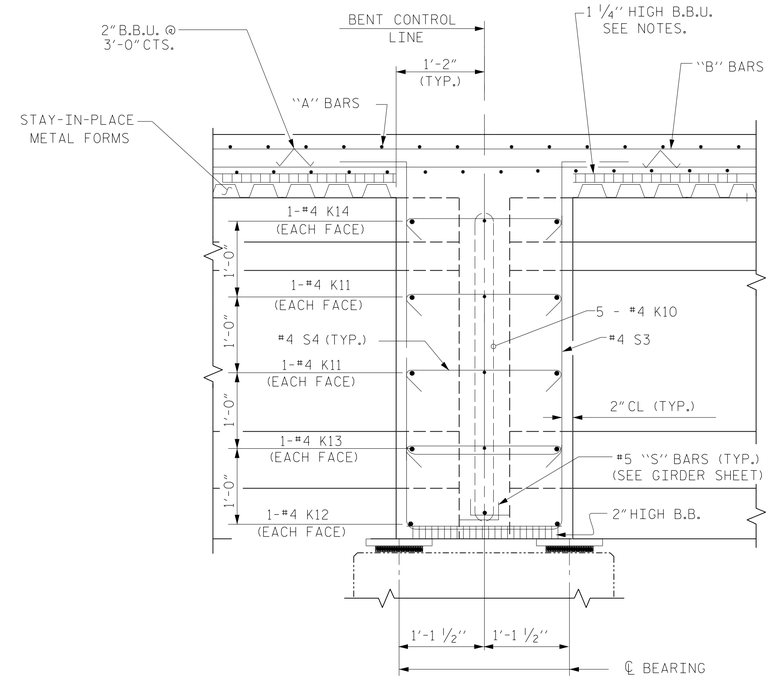


## SECTION @ BENT DIAPHRAGM

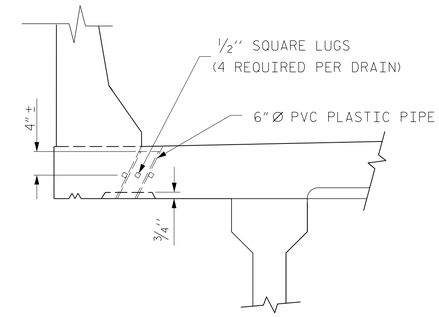


## ELEVATION

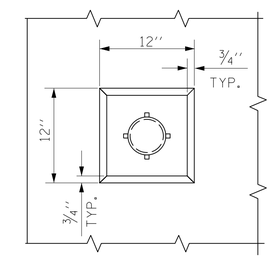


## PLAN OF RECESS

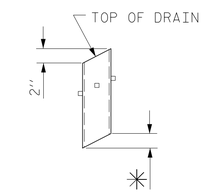


## PIPE DETAIL

✳ TO BE SET TO MATCH SLOPE OF BOTTOM OF OVERHANG (4 DRAINS REQUIRED)

TOP OF FLOOR DRAINS TO BE SET ⅜" BELOW SURFACE OF SLAB.

4 - ½" SQUARE LUGS TO BE GLUED TO THE P.V.C. PLASTIC PIPE AT EQUAL SPACES AROUND THE PIPE DRAIN APPROXIMATELY 4" FROM THE TOP OF THE PIPE.

THE 6" Ø PVC PLASTIC PIPE AND FITTINGS SHALL BE SCHEDULE 40 AND CONFORM TO ASTM D1785.

## DRAIN DETAILS

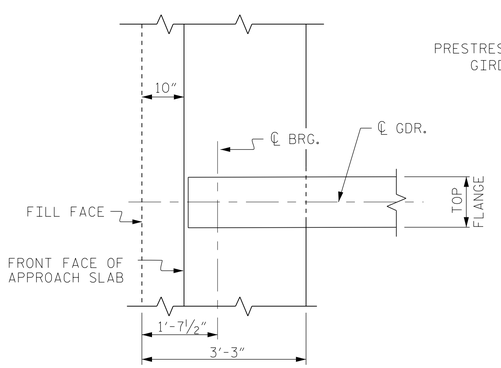


## PLAN OF GIRDER AT INTEGRAL END BENT

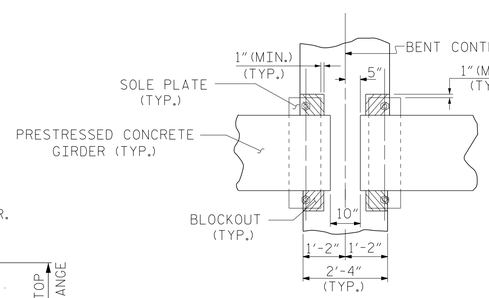


PLAN

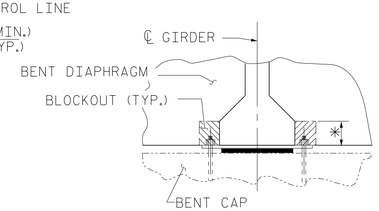


✳ TO MATCH BOTTOM FLANGE OF GIRDER

SECTION

## BENT DIAPHRAGM BLOCKOUT DETAIL

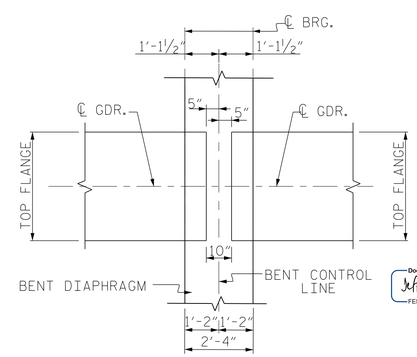


## PLAN OF GIRDER AT BENT

DocuSigned by: Jeff Loftus FE51DC02E679AA0 8/26/2016

NORTH CAROLINA PROFESSIONAL SEAL 041425 ENGINEER JEFFREY M. LOFTUS

DOCUMENT NOT CONSIDERED FINAL UNLESS ALL SIGNATURES COMPLETED

STEWART

Firm License No. C-1051
421 Fayetteville St,
Suite 400
Raleigh, NC 27601
T 919.380.8750
www.stewartinc.com

PROJECT NO. 17BP.5.R.50

FRANKLIN COUNTY

STATION: 15+46.00 -L-

SHEET 2 OF 2

STATE OF NORTH CAROLINA
DEPARTMENT OF TRANSPORTATION
RALEIGH

SUPERSTRUCTURE

TYPICAL SECTION DETAILS

| REVISIONS | | | | | | SHEET NO. |
|---|---|---|---|---|---|---|
| NO. | BY: | DATE: | NO. | BY: | DATE: | S-6 |
| 1 | | | 3 | | | TOTAL SHEETS |
| 2 | | | 4 | | | 35 |

| | | | |
|---|---|---|---|
| DRAWN BY: | H.ASSFOURA | DATE : | 02/15 |
| CHECKED BY: | D.RUGGLES | DATE : | 09/15 |
| DESIGN ENGINEER OF RECORD: | J. LOFTUS | DATE : | 03/16 |

BRIDGE NO: 720026

8/26/2016
...\400_006_17BP5R50_SMU_TS02.dgn
USER:jloftus

10/15

DocuSign Envelope ID: D287D744-7745-45ED-A608-C74816553493

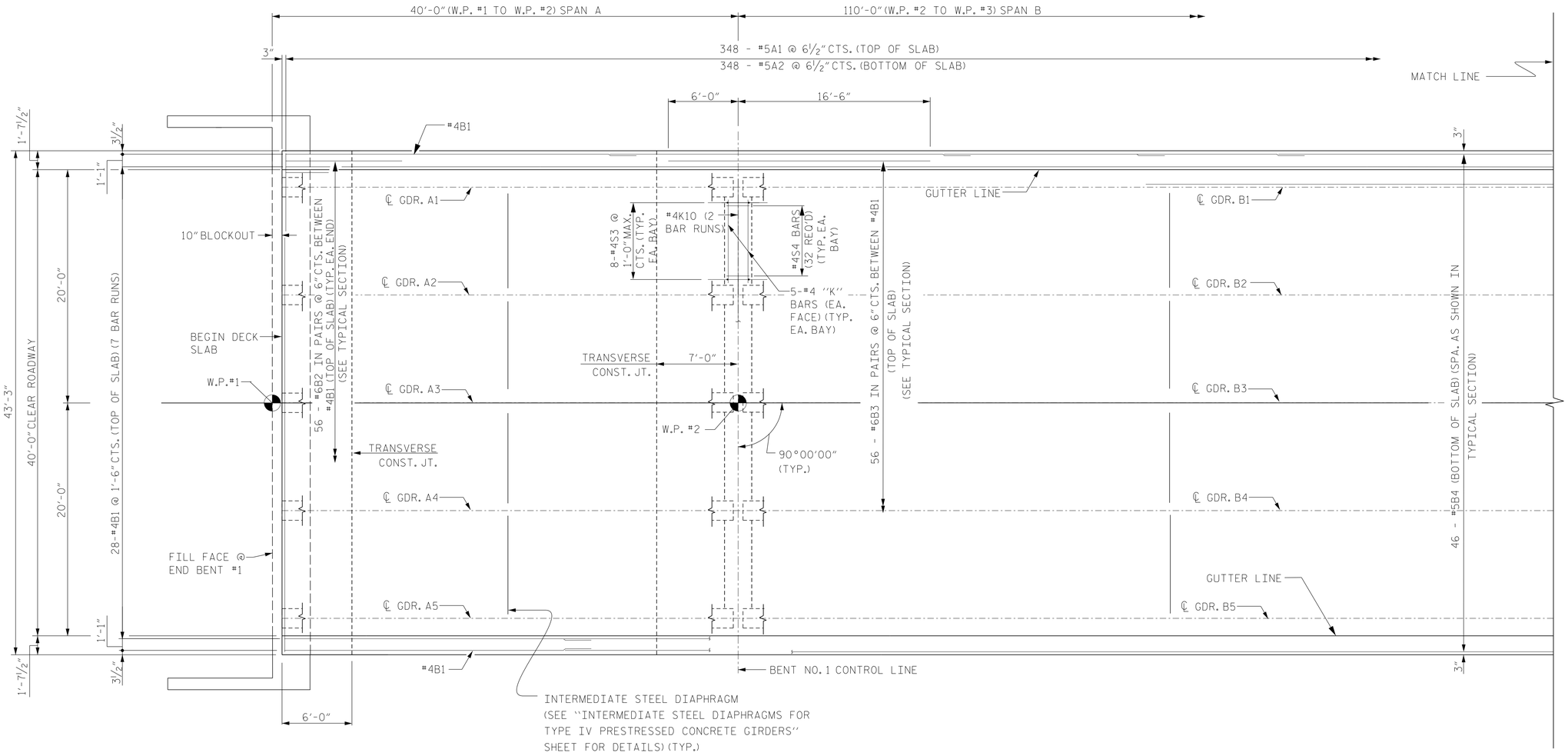


## PLAN OF SPAN A & PARTIAL SPAN B

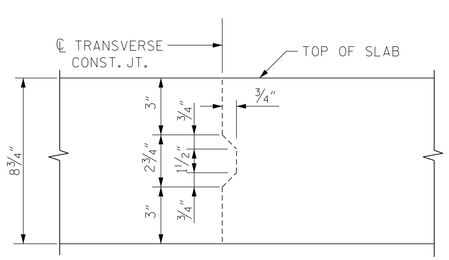


## TRANSVERSE CONSTRUCTION JOINT DETAIL

NOTE: REINFORCING STEEL IN SLAB NOT SHOWN.
LONGITUDINAL STEEL SHALL BE CONTINUOUS THROUGH JOINT.

DocuSigned by: Jeff Loftus FE51DC02E679AA9... 8/26/2016

NORTH CAROLINA PROFESSIONAL SEAL 041425 ENGINEER JEFFREY M. LOFTUS

DOCUMENT NOT CONSIDERED FINAL UNLESS ALL SIGNATURES COMPLETED

PROJECT NO. 17BP.5.R.50
FRANKLIN COUNTY
STATION: 15+46.00 -L-

SHEET 1 OF 5

STATE OF NORTH CAROLINA
DEPARTMENT OF TRANSPORTATION
RALEIGH

SUPERSTRUCTURE
PLAN OF SPANS
SPAN A & PARTIAL SPAN B

STEWART
Firm License No. C-1051
421 Fayetteville St,
Suite 400
Raleigh, NC 27601
T 919.380.8750
www.stewartinc.com

| REVISIONS | | | | | | SHEET NO. |
|---|---|---|---|---|---|---|
| NO. | BY: | DATE: | NO. | BY: | DATE: | S-7 |
| 1 | | | 3 | | | TOTAL SHEETS |
| 2 | | | 4 | | | 35 |

| | | | |
|---|---|---|---|
| DRAWN BY: | H.ASSFOURA | DATE : | 02/15 |
| CHECKED BY: | D. RUGGLES | DATE : | 09/15 |
| DESIGN ENGINEER OF RECORD: | J. LOFTUS | DATE : | 03/16 |

BRIDGE NO: 720026
8/26/2016
...\400_007_17BP5R50_SMU_SP01.dgn
USER: jloftus

DocuSign Envelope ID: D287D744-7745-45ED-A608-C74816553493

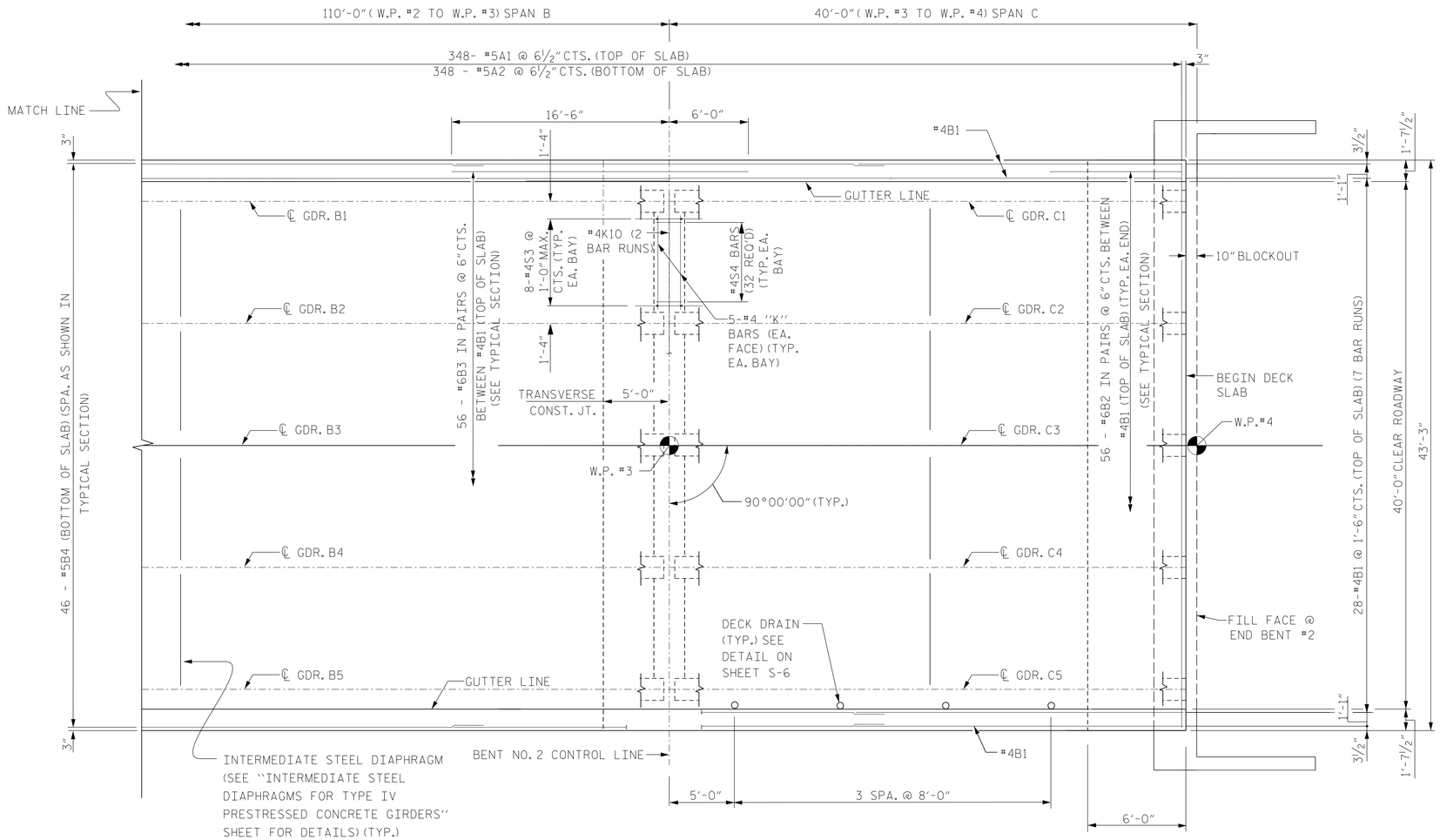


# PLAN OF PARTIAL SPAN B & SPAN C

PROJECT NO. 17BP.5.R.50

FRANKLIN COUNTY

STATION: 15+46.00 -L-

SHEET 2 OF 5

DocuSigned by: Jeff Loftus — FE51DC02E679A82 — 8/26/2016

NORTH CAROLINA PROFESSIONAL SEAL 041425 ENGINEER JEFFREY M. LOFTUS

DOCUMENT NOT CONSIDERED FINAL UNLESS ALL SIGNATURES COMPLETED

STEWART

Firm License No. C-1051
421 Fayetteville St,
Suite 400
Raleigh, NC 27601
T 919.380.8750
www.stewartinc.com

STATE OF NORTH CAROLINA
DEPARTMENT OF TRANSPORTATION
RALEIGH

SUPERSTRUCTURE
PLAN OF SPANS
PARTIAL SPAN B & SPAN C

| REVISIONS | | | | | | SHEET NO. |
|---|---|---|---|---|---|---|
| NO. | BY: | DATE: | NO. | BY: | DATE: | S-8 |
| 1 | | | 3 | | | TOTAL SHEETS |
| 2 | | | 4 | | | 35 |

| | | | |
|---|---|---|---|
| DRAWN BY: | H.ASSFOURA | DATE : | 02/15 |
| CHECKED BY: | D. RUGGLES | DATE : | 09/15 |
| DESIGN ENGINEER OF RECORD: | J. LOFTUS | DATE : | 03/16 |

BRIDGE NO: 720026

8/26/2016
...\400_008_17BP5R50_SMU_SP02.dgn
USER:jloftus

DocuSign Envelope ID: D287D744-7745-45ED-A608-C74816553493

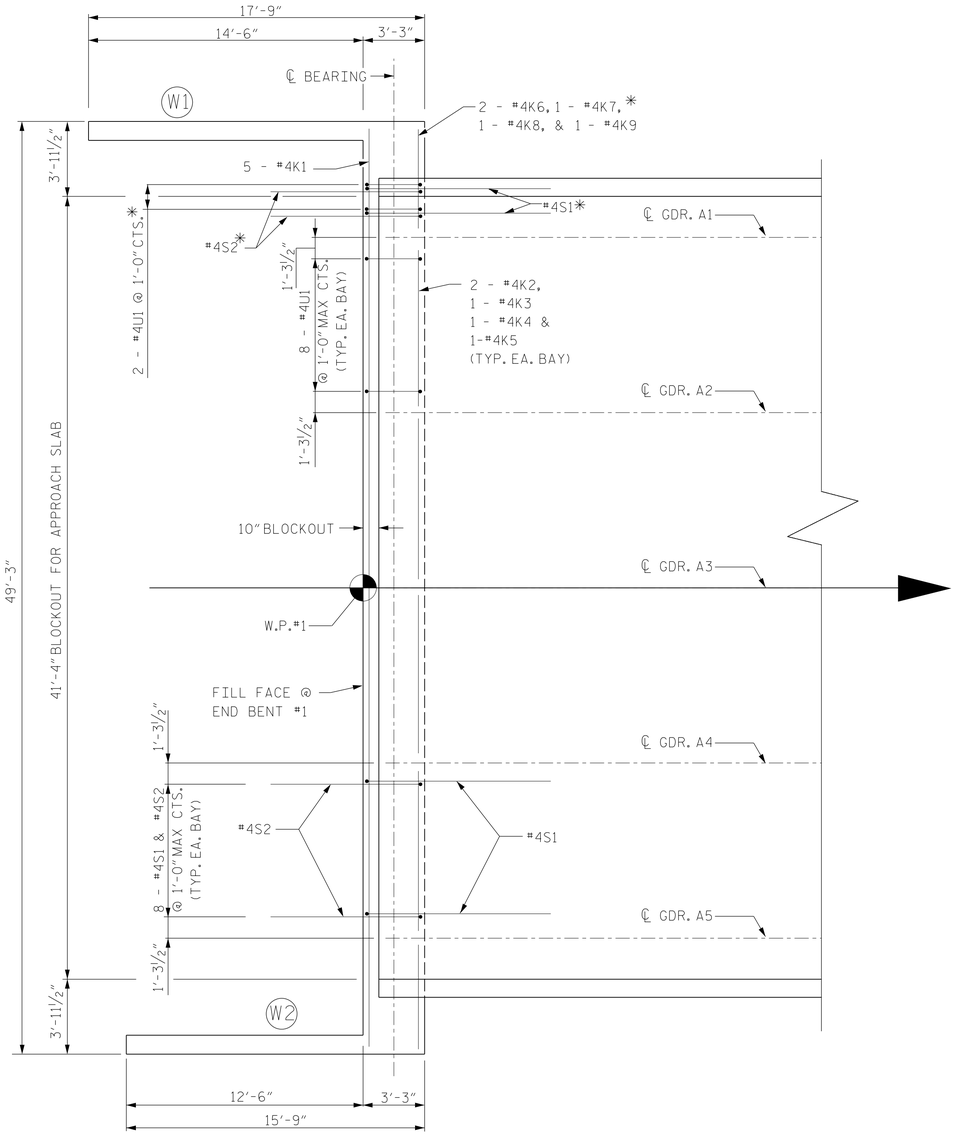


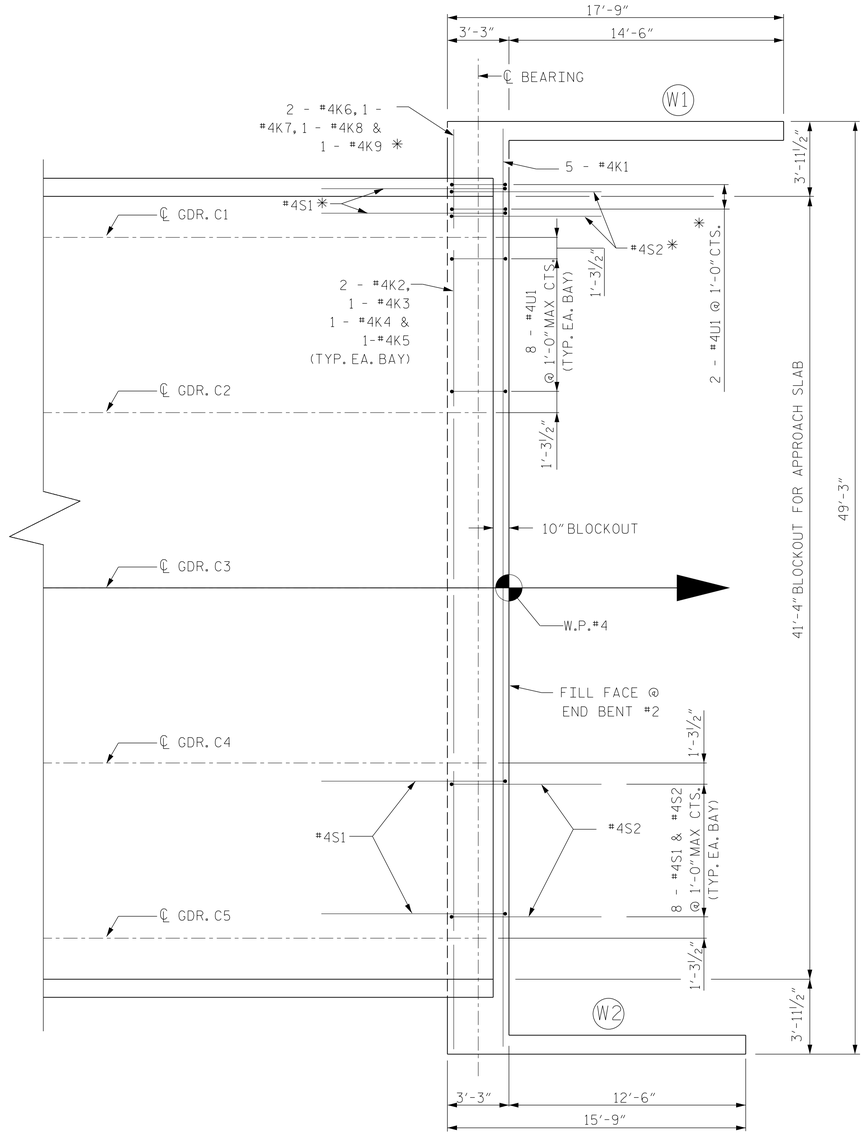


## PLAN OF ABUTMENT WALLS

* TYPICAL EACH OVERHANG

PROJECT NO. 17BP.5.R.50

FRANKLIN COUNTY

STATION: 15+46.00 -L-

SHEET 3 OF 5

DocuSigned by: Jeff Loftus 8/26/2016
FE51DC02E679AA9...

NORTH CAROLINA PROFESSIONAL SEAL 041425 ENGINEER JEFFREY M. LOFTUS

DOCUMENT NOT CONSIDERED FINAL UNLESS ALL SIGNATURES COMPLETED

STEWART

Firm License No. C-1051
421 Fayetteville St,
Suite 400
Raleigh, NC 27601
T 919.380.8750
www.stewartinc.com

STATE OF NORTH CAROLINA
DEPARTMENT OF TRANSPORTATION
RALEIGH

SUPERSTRUCTURE
PLAN OF SPAN
DETAILS

| REVISIONS | | | | | | | | SHEET NO. |
|---|---|---|---|---|---|---|---|---|
| NO. | BY: | DATE: | NO. | BY: | DATE: | | | S-9 |
| 1 | | | 3 | | | | | TOTAL SHEETS |
| 2 | | | 4 | | | | | 35 |

| | | | |
|---|---|---|---|
| DRAWN BY: | H.ASSFOURA | DATE : | 2/15 |
| CHECKED BY: | D. RUGGLES | DATE : | 09/15 |
| DESIGN ENGINEER OF RECORD: | J. LOFTUS | DATE : | 03/16 |

BRIDGE NO: T20026

8/26/2016
...\400_009_17BP5R50_SMU_SP03.dgn
USER:jloftus

DocuSign Envelope ID: D287D744-7745-45ED-A608-C74816553493

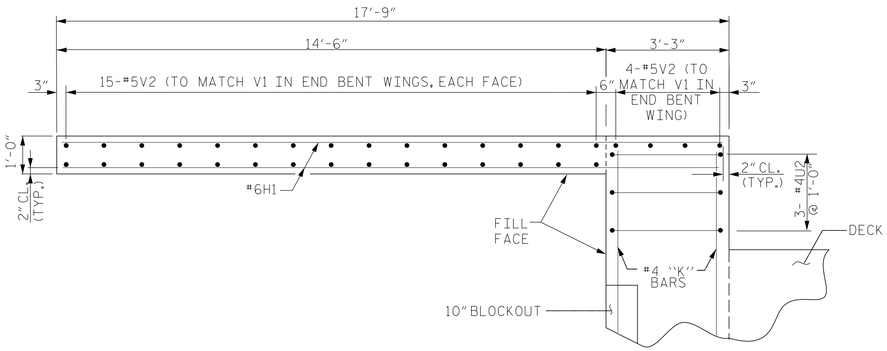


PLAN OF WING 1 END BENT 1

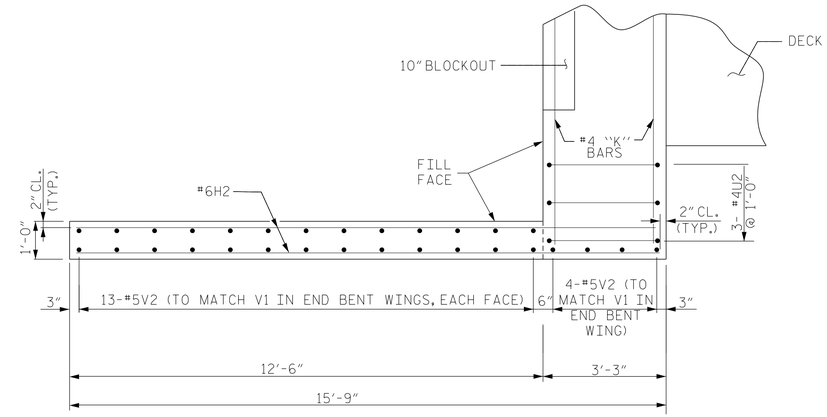


PLAN OF WING 2 END BENT 1

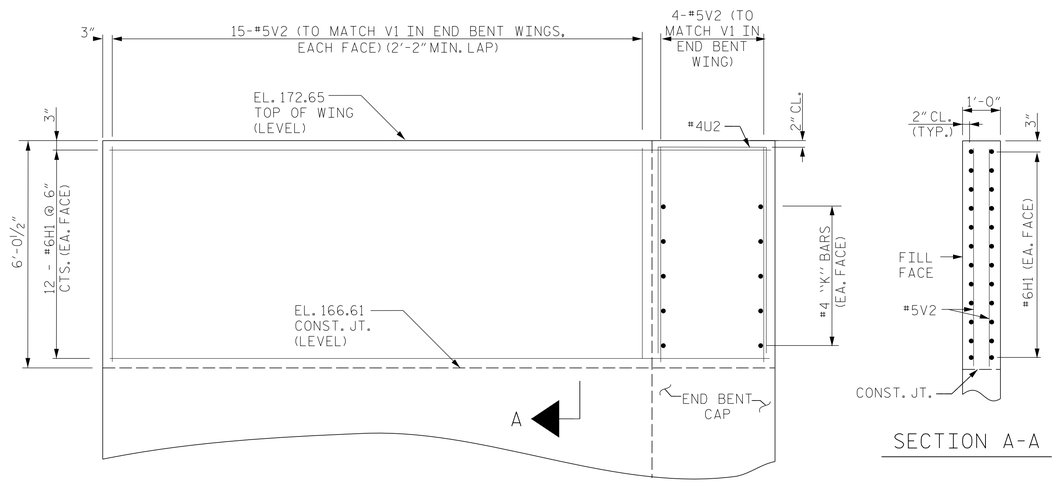


SECTION A-A

ELEVATION OF WING 1 END BENT 1

FOR REINFORCING STEEL IN LOWER PORTION OF WING, SEE END BENT SHEETS

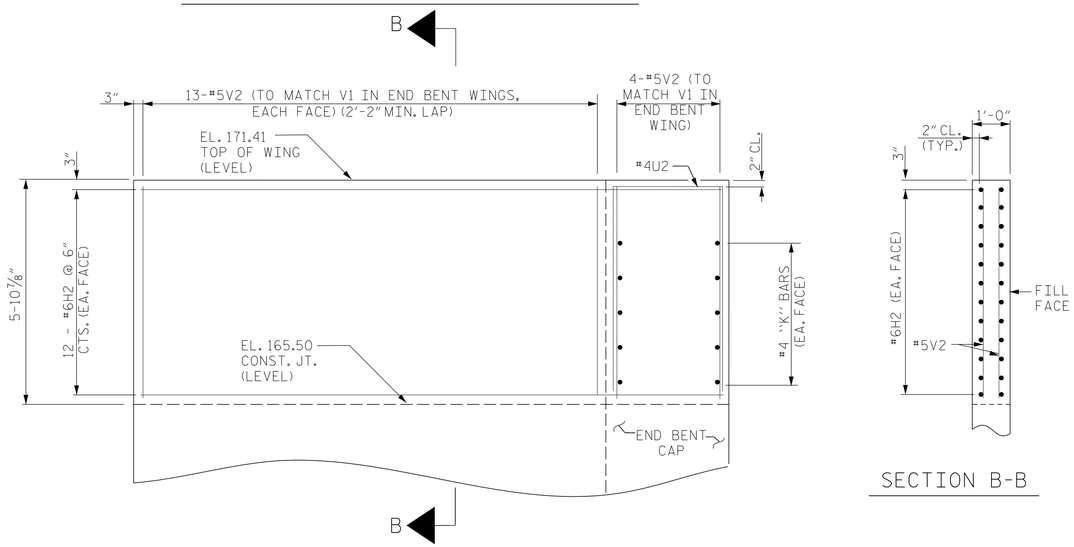


SECTION B-B

ELEVATION OF WING 2 END BENT 1

FOR REINFORCING STEEL IN LOWER PORTION OF WING, SEE END BENT SHEETS

PROJECT NO. 17BP.5.R.50

FRANKLIN COUNTY

STATION: 15+46.00 -L-

SHEET 4 OF 5

DocuSigned by: Jeff Loftus FE51DC02E679A42 8/26/2016

NORTH CAROLINA PROFESSIONAL SEAL 041425 ENGINEER JEFFREY M. LOFTUS

DOCUMENT NOT CONSIDERED FINAL UNLESS ALL SIGNATURES COMPLETED

STEWART

Firm License No. C-1051
421 Fayetteville St,
Suite 400
Raleigh, NC 27601
T 919.380.8750
www.stewartinc.com

STATE OF NORTH CAROLINA
DEPARTMENT OF TRANSPORTATION
RALEIGH

SUPERSTRUCTURE
PLAN OF SPAN
DETAILS

| REVISIONS | | | | | | SHEET NO. |
|---|---|---|---|---|---|---|
| NO. | BY: | DATE: | NO. | BY: | DATE: | S-10 |
| 1 | | | 3 | | | TOTAL SHEETS |
| 2 | | | 4 | | | 35 |

| | | | |
|---|---|---|---|
| DRAWN BY: | H.ASSFOURA | DATE : | 10/15 |
| CHECKED BY: | D. RUGGLES | DATE : | 10/15 |
| DESIGN ENGINEER OF RECORD: | J. LOFTUS | DATE : | 03/16 |

BRIDGE NO: 720026
8/26/2016
...\400_010_17BP5R50_SMU_SP04.dgn
USER:jloftus

DocuSign Envelope ID: D287D744-7745-45ED-A608-C74816553493

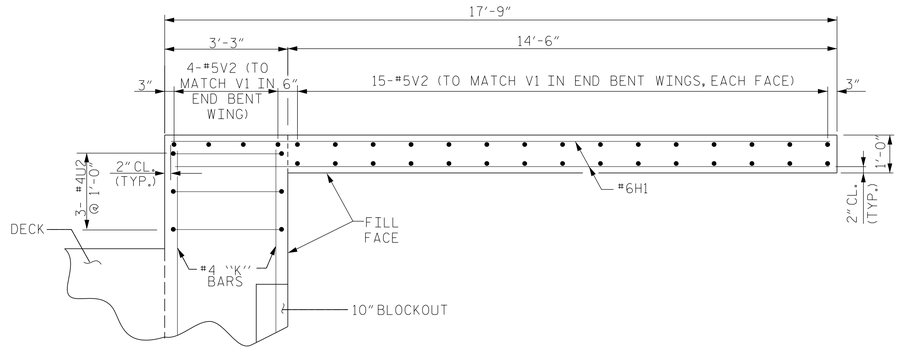


PLAN OF WING 1 END BENT 2

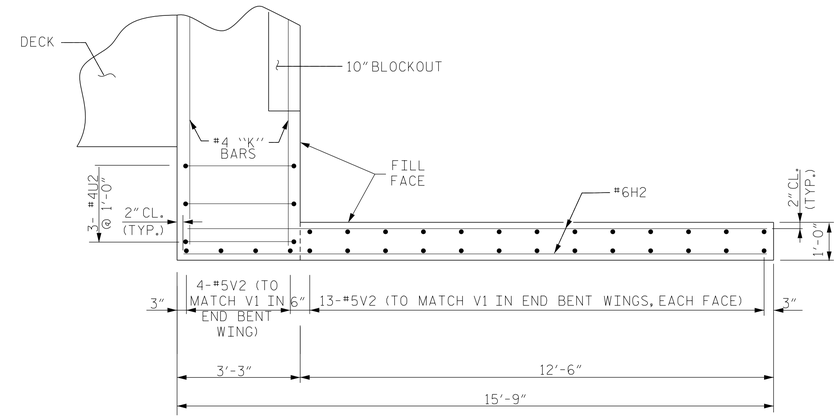


PLAN OF WING 2 END BENT 2

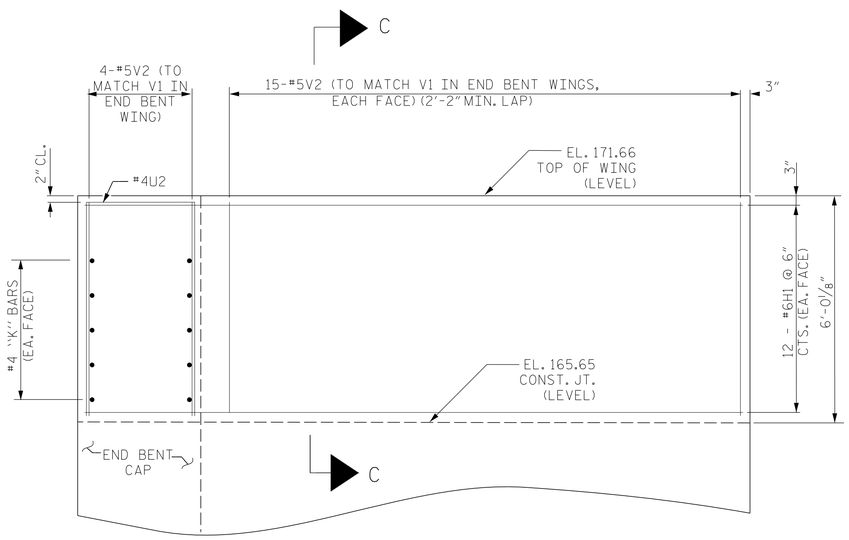


ELEVATION OF WING 1 END BENT 2

FOR REINFORCING STEEL IN LOWER PORTION OF WING, SEE END BENT SHEETS

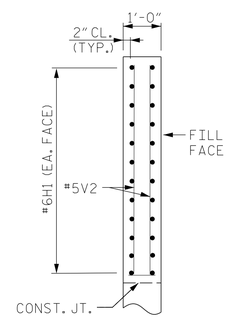


SECTION C-C

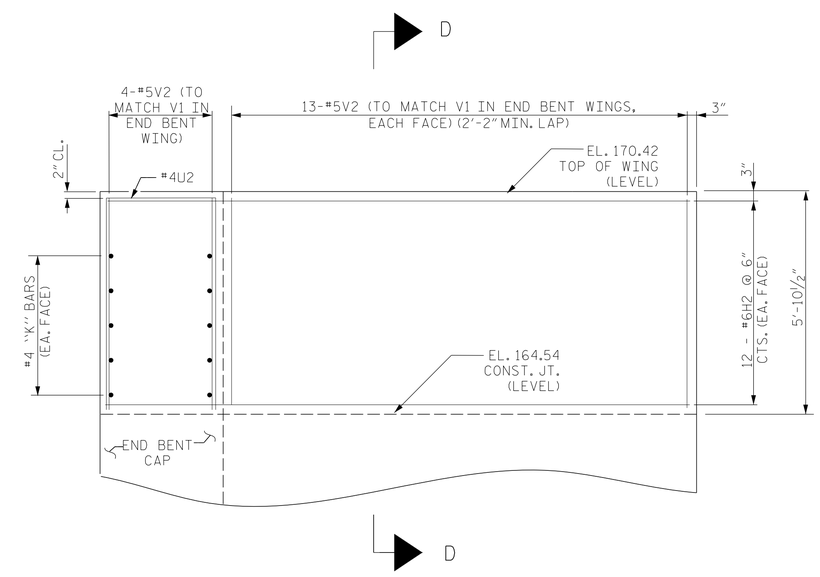


ELEVATION OF WING 2 END BENT 2

FOR REINFORCING STEEL IN LOWER PORTION OF WING, SEE END BENT SHEETS

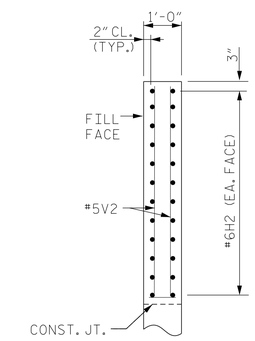


SECTION D-D

PROJECT NO. 17BP.5.R.50

FRANKLIN COUNTY

STATION: 15+46.00 -L-

SHEET 5 OF 5

DocuSigned by: Jeff Loftus FE51DC02E679AA0 8/26/2016

NORTH CAROLINA PROFESSIONAL SEAL 041425 ENGINEER JEFFREY M. LOFTUS

DOCUMENT NOT CONSIDERED FINAL UNLESS ALL SIGNATURES COMPLETED

STEWART

Firm License No. C-1051
421 Fayetteville St,
Suite 400
Raleigh, NC 27601
T 919.380.8750
www.stewartinc.com

STATE OF NORTH CAROLINA
DEPARTMENT OF TRANSPORTATION
RALEIGH

SUPERSTRUCTURE
PLAN OF SPAN
DETAILS

| REVISIONS | | | | | | SHEET NO. |
|---|---|---|---|---|---|---|
| NO. | BY: | DATE: | NO. | BY: | DATE: | S-11 |
| 1 | | | 3 | | | TOTAL SHEETS |
| 2 | | | 4 | | | 35 |

| | | | |
|---|---|---|---|
| DRAWN BY: | H.ASSFOURA | DATE : | 10/15 |
| CHECKED BY: | D. RUGGLES | DATE : | 10/15 |
| DESIGN ENGINEER OF RECORD: | J. LOFTUS | DATE : | 03/16 |

BRIDGE NO: 720026

8/26/2016
...\400_011_17BP5R50_SMU_SP05.dgn
USER:jloftus

DocuSign Envelope ID: D287D744-7745-45ED-A608-C74816553493

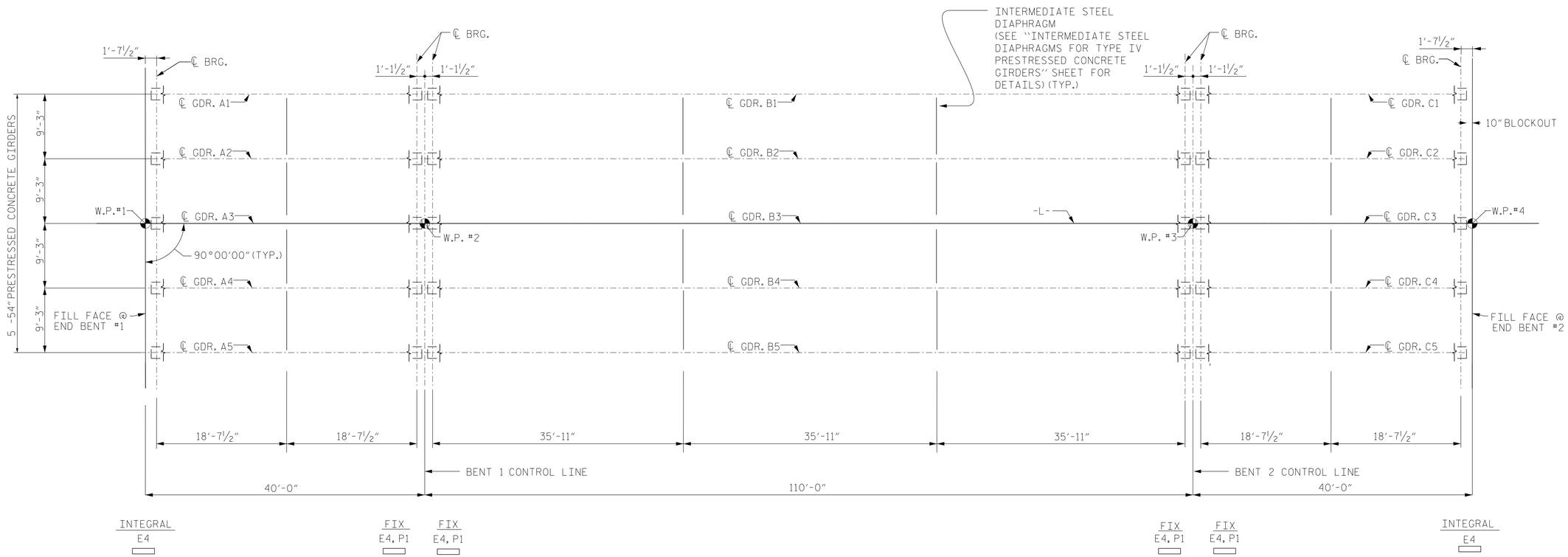


# GIRDER LAYOUT

PROJECT NO. 17BP.5.R.50

FRANKLIN COUNTY

STATION: 15+46.00 -L-

DocuSigned by: Jeff Loftus FE51DC02E679AA9 8/26/2016

NORTH CAROLINA PROFESSIONAL SEAL 041425 ENGINEER JEFFREY M. LOFTUS

DOCUMENT NOT CONSIDERED FINAL UNLESS ALL SIGNATURES COMPLETED

STEWART

Firm License No. C-1051
421 Fayetteville St,
Suite 400
Raleigh, NC 27601
T 919.380.8750
www.stewartinc.com

STATE OF NORTH CAROLINA
DEPARTMENT OF TRANSPORTATION
RALEIGH

GIRDER LAYOUT

| REVISIONS | | | | | | SHEET NO. |
|---|---|---|---|---|---|---|
| NO. | BY: | DATE: | NO. | BY: | DATE: | S-12 |
| 1 | | | 3 | | | TOTAL SHEETS |
| 2 | | | 4 | | | 35 |

| | | | |
|---|---|---|---|
| DRAWN BY: | H.ASSFOURA | DATE : | 02/15 |
| CHECKED BY: | D. RUGGLES | DATE : | 09/15 |
| DESIGN ENGINEER OF RECORD: | J. LOFTUS | DATE : | 03/16 |

BRIDGE NO: 720026

8/26/2016
...\400_012_17BP5R50_SMU_GL01.dgn
USER:jloftus

DocuSign Envelope ID: D287D744-7745-45ED-A608-C74816553493

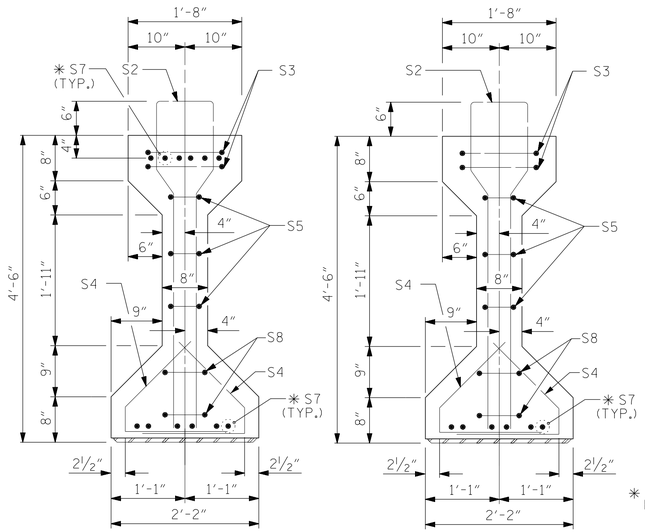


SECTION A-A




SECTION B-B

✳ FOR S7 BARS, SEE DETAIL "A" OF PRESTRESSED CONCRETE GIRDER CONTINUOUS FOR LIVE LOAD DETAILS SHEET

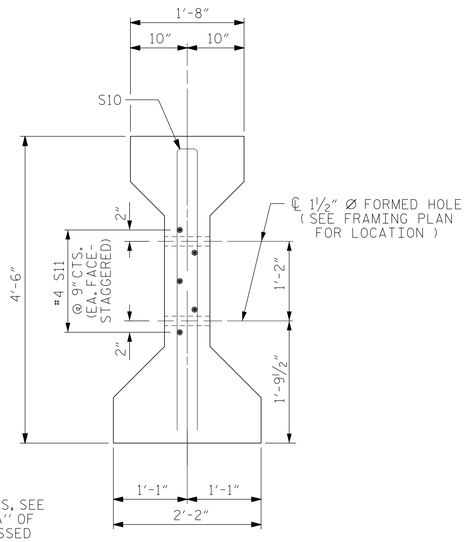


SECTION C-C

(S1 BARS NOT SHOWN)

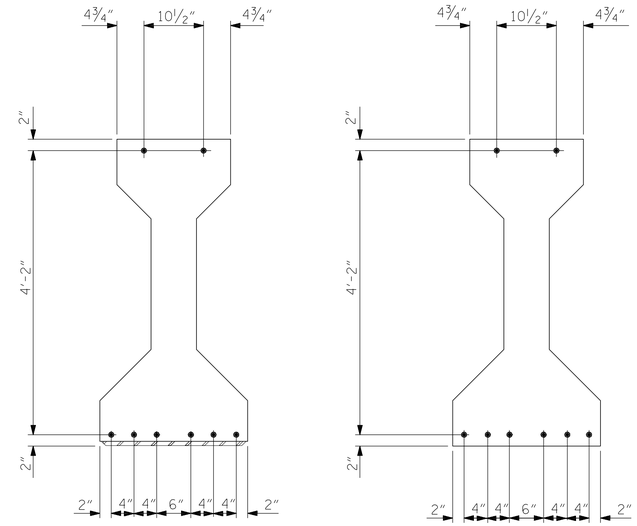


AT END OF GIRDER

AT ℄ OF GIRDER

0.6" Ø LOW RELAXATION STRAND LAYOUT

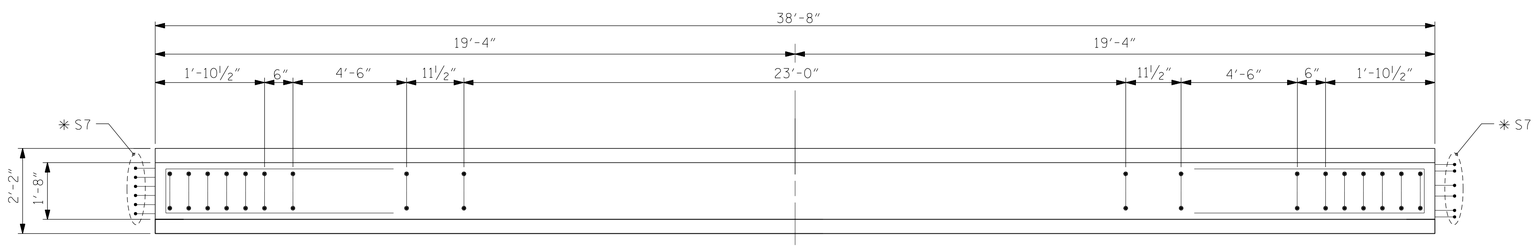


PLAN OF GIRDER

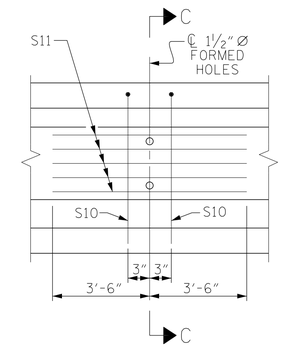


PARTIAL ELEVATION

SHOWING INTERMEDIATE DIAPHRAGM REINFORCING STEEL FOR GIRDER Nos. 1-5

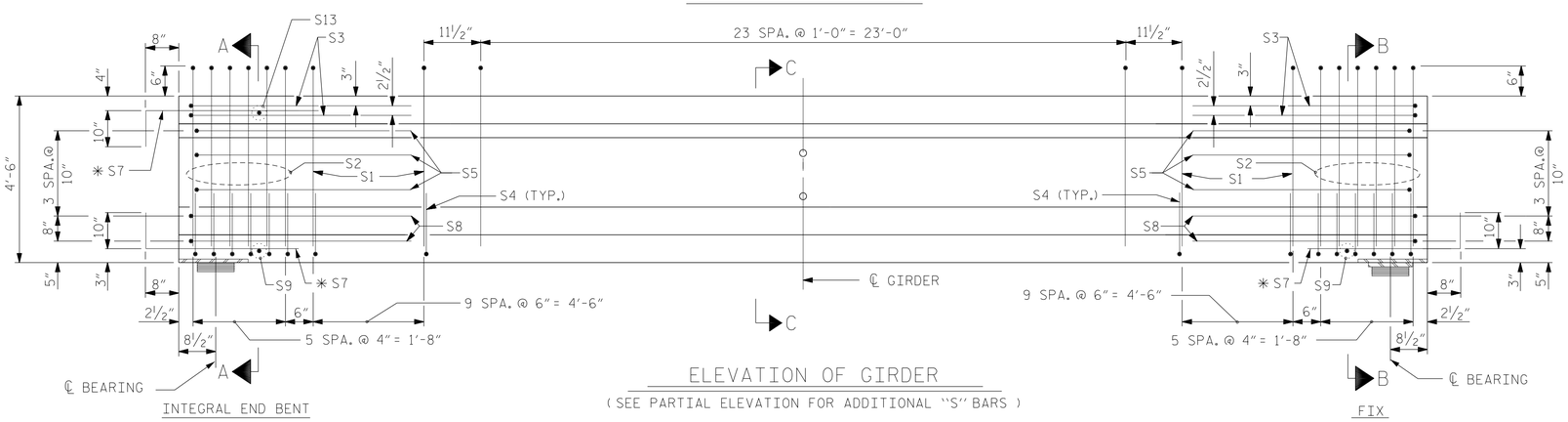


ELEVATION OF GIRDER

( SEE PARTIAL ELEVATION FOR ADDITIONAL "S" BARS )

## 0.6" Ø L. R. GRADE 270 STRANDS

| AREA (SQUARE INCHES) | ULTIMATE STRENGTH (LBS. PER STRAND) | APPLIED PRESTRESS (LBS. PER STRAND) |
|---|---|---|
| 0.217 | 58,600 | 43,950 |

## REINFORCING STEEL FOR ONE GIRDER

| BAR | NUMBER | SIZE | TYPE | LENGTH | WEIGHT |
|---|---|---|---|---|---|
| S1 | 44 | #4 | 1 | 10'-8" | 314 |
| S2 | 12 | #6 | 1 | 10'-8" | 192 |
| S3 | 4 | #4 | 2 | 9'-1" | 24 |
| S4 | 64 | #4 | 3 | 3'-5" | 146 |
| S5 | 6 | #4 | 2 | 8'-5" | 34 |
| ✳ S7 | 18 | #5 | STR | 3'-8" | 69 |
| S8 | 4 | #4 | 2 | 8'-7" | 23 |
| S9 | 2 | #3 | STR | 1'-10" | 1 |
| S10 | 2 | #5 | 2 | 8'-8" | 18 |
| S11 | 5 | #4 | STR | 7'-0" | 23 |
| S13 | 1 | #3 | STR | 1'-4" | 1 |

✳ NOTE: S7 BARS SHALL BE BENT BEFORE SHIPMENT. HEAT BENDING SHALL NOT BE ALLOWED.

## BAR TYPES

ALL BAR DIMENSIONS ARE OUT-TO-OUT

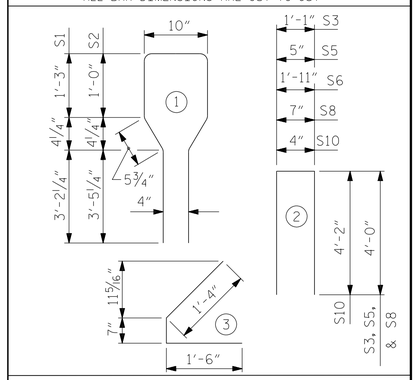


## QUANTITIES FOR ONE GIRDER

| | REINFORCING STEEL LB. | 5000 PSI CONCRETE C.Y. | 0.6" Ø L. R. STRANDS No. |
|---|---|---|---|
| EXTERIOR GIRDER | 845 | 7.85 | 8 |
| INTERIOR GIRDER | 845 | 7.85 | 8 |

## GIRDERS REQUIRED

| NUMBER | LENGTH | TOTAL LENGTH |
|---|---|---|
| 5 | 38'-8" | 193'-4" |

PROJECT NO. 17BP.5.R.50

FRANKLIN COUNTY

STATION: 15+46.00 -L-

SHEET 1 OF 5

DocuSigned by: Jeff Loftus FE51DC02E679AAC 8/26/2016

NORTH CAROLINA PROFESSIONAL SEAL 041425 ENGINEER JEFFREY M. LOFTUS

DOCUMENT NOT CONSIDERED FINAL UNLESS ALL SIGNATURES COMPLETED

STEWART

Firm License No. C-1051
421 Fayetteville St,
Suite 400
Raleigh, NC 27601
T 919.380.8750
www.stewartinc.com

STATE OF NORTH CAROLINA
DEPARTMENT OF TRANSPORTATION
RALEIGH

STANDARD
AASHTO TYPE IV
PRESTRESSED CONCRETE GIRDER
CONTINUOUS FOR LIVE LOAD
SPAN A

| REVISIONS | | | | | | SHEET NO. |
|---|---|---|---|---|---|---|
| NO. | BY: | DATE: | NO. | BY: | DATE: | S-13 |
| 1 | | | 3 | | | TOTAL SHEETS |
| 2 | | | 4 | | | 35 |

| | | | |
|---|---|---|---|
| DRAWN BY: | H.ASSFOURA | DATE : | 02/15 |
| CHECKED BY: | D. RUGGLES | DATE : | 09/15 |
| DESIGN ENGINEER OF RECORD: | J. LOFTUS | DATE : | 03/16 |

BRIDGE NO: 720026
8/26/2016
...\400_013_17BP5R50_SMU_CD01.dgn
USER:jloftus

DocuSign Envelope ID: D287D744-7745-45ED-A608-C74816553493

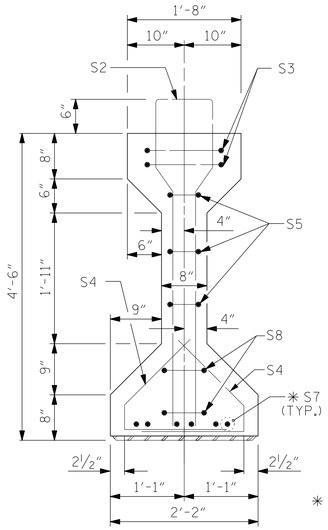


✱ FOR S7 BARS, SEE DETAIL "A" OF PRESTRESSED CONCRETE GIRDER CONTINUOUS FOR LIVE LOAD DETAILS SHEET

SECTION A-A

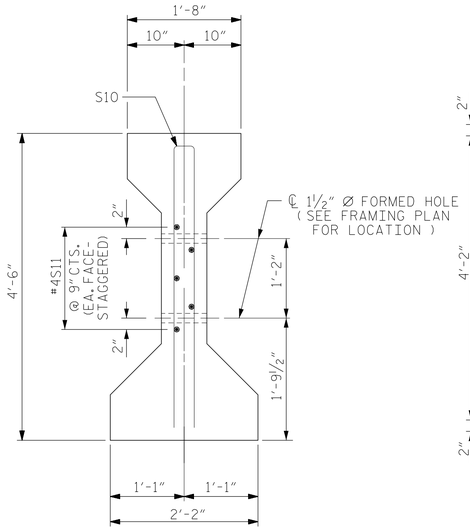


SECTION C-C

(S1 BARS NOT SHOWN)

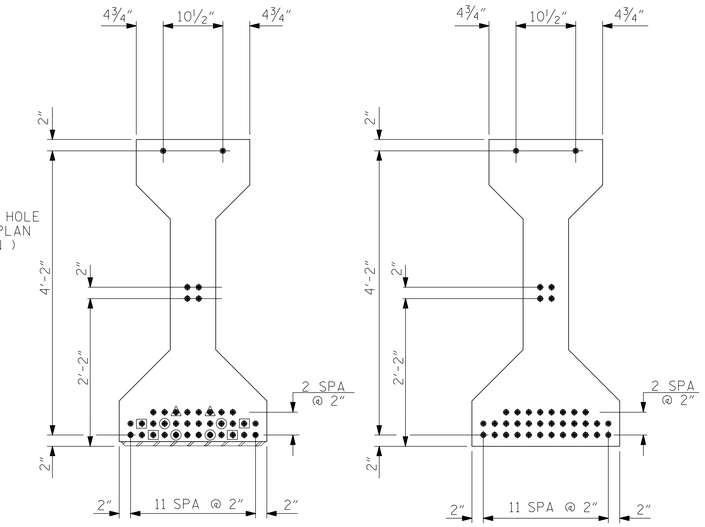


AT END OF GIRDER

AT ℄ OF GIRDER

0.6" Ø LOW RELAXATION STRAND LAYOUT

DEBONDING LEGEND

- ● FULLY BONDED STRANDS
- ○ STRANDS DEBONDED FOR 4'-0" FROM GIRDER END
- △ STRANDS DEBONDED FOR 8'-0" FROM GIRDER END
- □ STRANDS DEBONDED FOR 12'-0" FROM GIRDER END

## 0.6" Ø L. R. GRADE 270 STRANDS

| AREA (SQUARE INCHES) | ULTIMATE STRENGTH (LBS. PER STRAND) | APPLIED PRESTRESS (LBS. PER STRAND) |
|---|---|---|
| 0.217 | 58,600 | 43,950 |

## REINFORCING STEEL FOR ONE GIRDER

| BAR | NUMBER | SIZE | TYPE | LENGTH | WEIGHT |
|---|---|---|---|---|---|
| S1 | 91 | #5 | 1 | 10'-8" | 1012 |
| S2 | 12 | #6 | 1 | 10'-8" | 192 |
| S3 | 4 | #4 | 2 | 9'-1" | 24 |
| S4 | 80 | #4 | 3 | 3'-5" | 183 |
| S5 | 6 | #4 | 2 | 8'-5" | 34 |
| ✱ S7 | 12 | #5 | STR | 3'-8" | 46 |
| S8 | 4 | #4 | 2 | 8'-7" | 23 |
| S9 | 2 | #3 | STR | 1'-10" | 1 |
| S10 | 4 | #5 | 2 | 8'-8" | 36 |
| S11 | 10 | #4 | STR | 7'-0" | 47 |

✱ NOTE: S7 BARS SHALL BE BENT BEFORE SHIPMENT. HEAT BENDING SHALL NOT BE ALLOWED.

## BAR TYPES

ALL BAR DIMENSIONS ARE OUT-TO-OUT

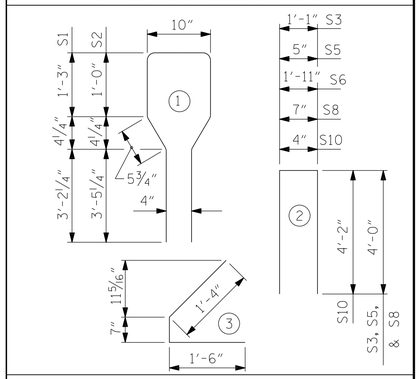


## QUANTITIES FOR ONE GIRDER

| | REINFORCING STEEL LB. | 8000 PSI CONCRETE C.Y. | 0.6" Ø L.R. STRANDS No. |
|---|---|---|---|
| EXTERIOR GIRDER | 1598 | 22.15 | 38 |
| INTERIOR GIRDER | 1598 | 22.15 | 38 |

GIRDERS REQUIRED

| NUMBER | LENGTH | TOTAL LENGTH |
|---|---|---|
| 5 | 109'-2" | 545'-10" |

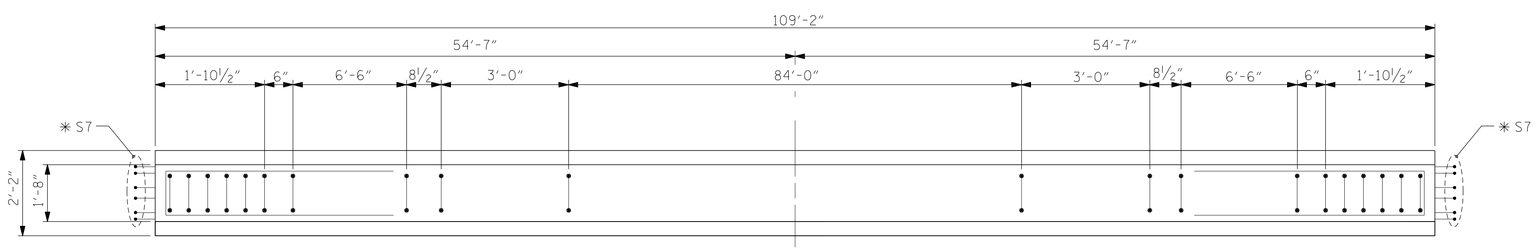


PLAN OF GIRDER

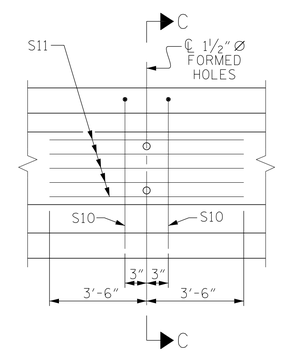


PARTIAL ELEVATION

SHOWING INTERMEDIATE DIAPHRAGM REINFORCING STEEL FOR GIRDER Nos. 1-5

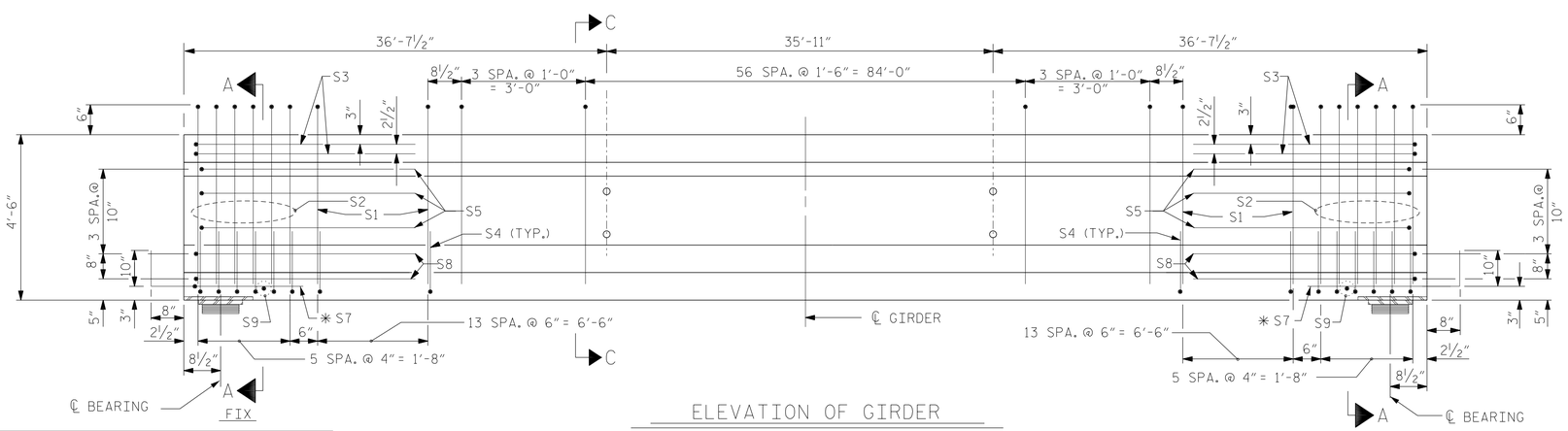


ELEVATION OF GIRDER

( SEE PARTIAL ELEVATION FOR ADDITIONAL "S" BARS )

PROJECT NO. 17BP.5.R.50

FRANKLIN COUNTY

STATION: 15+46.00 -L-

SHEET 2 OF 5

DocuSigned by: Jeff Loftus
FE51DC02E6794A9...

8/26/2016

NORTH CAROLINA PROFESSIONAL SEAL 041425 ENGINEER JEFFREY M. LOFTUS

DOCUMENT NOT CONSIDERED FINAL UNLESS ALL SIGNATURES COMPLETED

STATE OF NORTH CAROLINA
DEPARTMENT OF TRANSPORTATION
RALEIGH

STANDARD
AASHTO TYPE IV
PRESTRESSED CONCRETE GIRDER
CONTINUOUS FOR LIVE LOAD
SPAN B

Firm License No. C-1051
421 Fayetteville St,
Suite 400
Raleigh, NC 27601
T 919.380.8750
www.stewartinc.com

STEWART

| REVISIONS | | | | | | |
|---|---|---|---|---|---|---|
| NO. | BY: | DATE: | NO. | BY: | DATE: | |
| 1 | | | 3 | | | |
| 2 | | | 4 | | | |

SHEET NO. S-14

TOTAL SHEETS 35

| | | | |
|---|---|---|---|
| DRAWN BY: | H.ASSFOURA | DATE : | 02/15 |
| CHECKED BY: | D. RUGGLES | DATE : | 10/15 |
| DESIGN ENGINEER OF RECORD: | J. LOFTUS | DATE : | 03/16 |

BRIDGE NO: 720026

8/26/2016
...\400_014.17BP5R50_SMU_CD02.dgn
USER:jloftus

DocuSign Envelope ID: D287D744-7745-45ED-A608-C74816553493

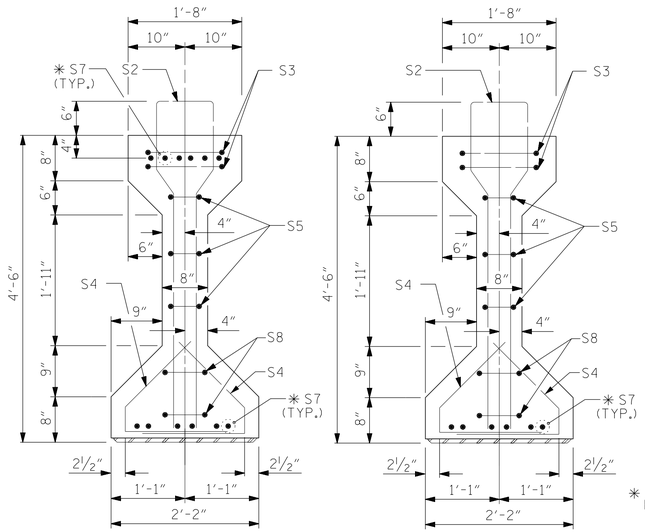


SECTION A-A




SECTION B-B

✱ FOR S7 BARS, SEE DETAIL "A" OF PRESTRESSED CONCRETE GIRDER CONTINUOUS FOR LIVE LOAD DETAILS SHEET

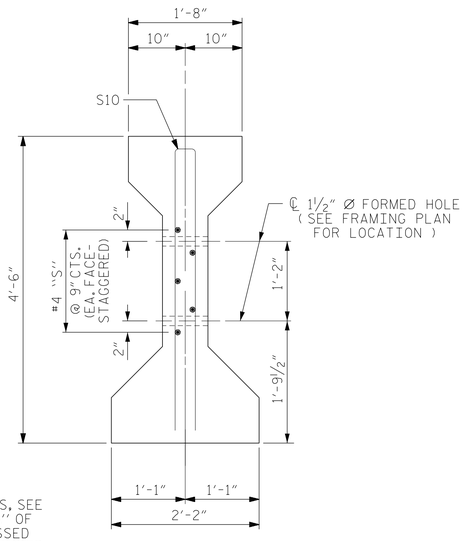


SECTION C-C

(S1 BARS NOT SHOWN)

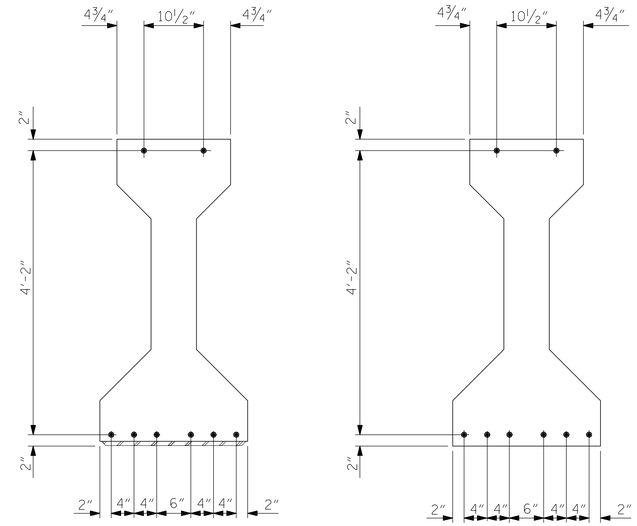


AT END OF GIRDER

AT ℄ OF GIRDER

0.6" Ø LOW RELAXATION STRAND LAYOUT

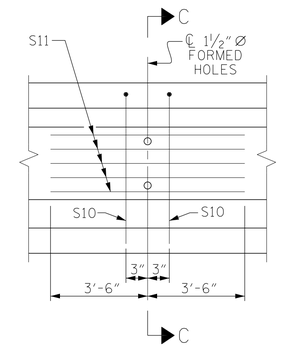


PARTIAL ELEVATION

SHOWING INTERMEDIATE DIAPHRAGM REINFORCING STEEL FOR GIRDER Nos. 1-5

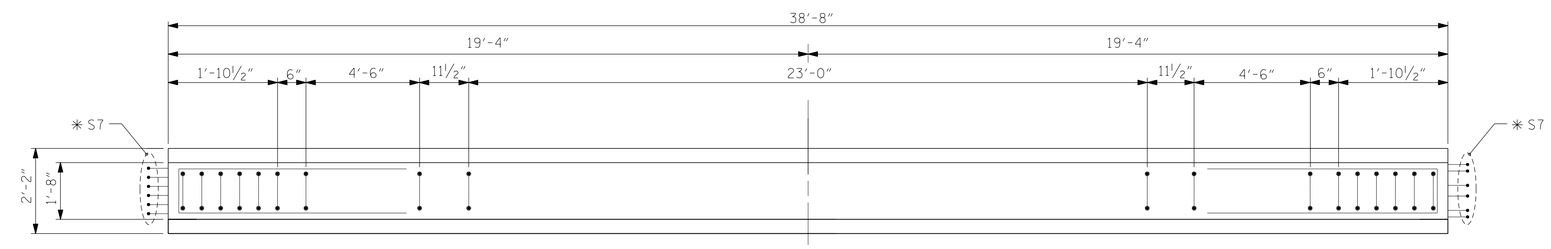


PLAN OF GIRDER

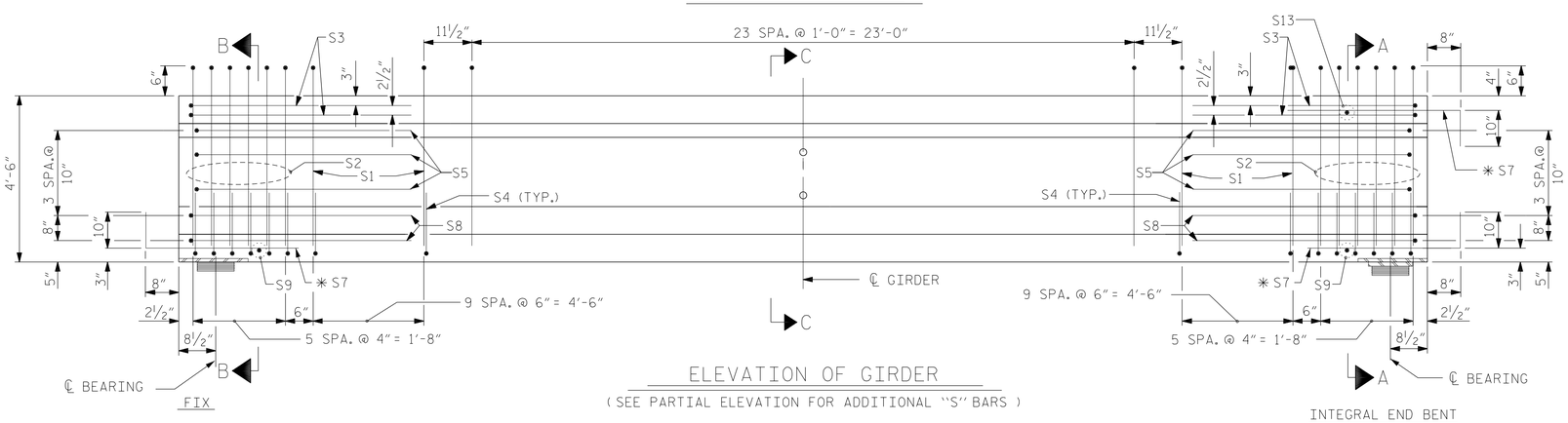


ELEVATION OF GIRDER

(SEE PARTIAL ELEVATION FOR ADDITIONAL "S" BARS)

## 0.6" Ø L. R. GRADE 270 STRANDS

| AREA (SQUARE INCHES) | ULTIMATE STRENGTH (LBS. PER STRAND) | APPLIED PRESTRESS (LBS. PER STRAND) |
|---|---|---|
| 0.217 | 58,600 | 43,950 |

## REINFORCING STEEL FOR ONE GIRDER

| BAR | NUMBER | SIZE | TYPE | LENGTH | WEIGHT |
|---|---|---|---|---|---|
| S1 | 44 | #4 | 1 | 10'-8" | 314 |
| S2 | 12 | #6 | 1 | 10'-8" | 192 |
| S3 | 4 | #4 | 2 | 9'-1" | 24 |
| S4 | 64 | #4 | 3 | 3'-5" | 146 |
| S5 | 6 | #4 | 2 | 8'-5" | 34 |
| ✱ S7 | 18 | #5 | STR | 3'-8" | 69 |
| S8 | 4 | #4 | 2 | 8'-7" | 23 |
| S9 | 2 | #3 | STR | 1'-10" | 1 |
| S10 | 2 | #5 | 2 | 8'-8" | 18 |
| S11 | 5 | #4 | STR | 7'-0" | 23 |
| S13 | 1 | #3 | STR | 1'-4" | 1 |

✱ NOTE: S7 BARS SHALL BE BENT BEFORE SHIPMENT. HEAT BENDING SHALL NOT BE ALLOWED.

## BAR TYPES

ALL BAR DIMENSIONS ARE OUT-TO-OUT

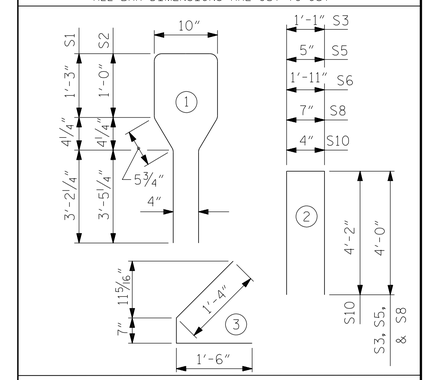


## QUANTITIES FOR ONE GIRDER

| | REINFORCING STEEL LB. | 5000 PSI CONCRETE C.Y. | 0.6" Ø L.R. STRANDS No. |
|---|---|---|---|
| EXTERIOR GIRDER | 845 | 7.85 | 8 |
| INTERIOR GIRDER | 845 | 7.85 | 8 |

## GIRDERS REQUIRED

| NUMBER | LENGTH | TOTAL LENGTH |
|---|---|---|
| 5 | 38'-8" | 193'-4" |

PROJECT NO. 17BP.5.R.50

FRANKLIN COUNTY

STATION: 15+46.00 -L-

SHEET 3 OF 5

DocuSigned by: Jeff Loftus FE51DC02E679AAF... 8/26/2016

NORTH CAROLINA PROFESSIONAL SEAL 041425 ENGINEER JEFFREY M. LOFTUS

DOCUMENT NOT CONSIDERED FINAL UNLESS ALL SIGNATURES COMPLETED

STEWART

Firm License No. C-1051
421 Fayetteville St,
Suite 400
Raleigh, NC 27601
T 919.380.8750
www.stewartinc.com

STATE OF NORTH CAROLINA
DEPARTMENT OF TRANSPORTATION
RALEIGH

STANDARD
AASHTO TYPE IV
PRESTRESSED CONCRETE GIRDER
CONTINUOUS FOR LIVE LOAD
SPAN C

| REVISIONS | | | | | | SHEET NO. |
|---|---|---|---|---|---|---|
| NO. | BY: | DATE: | NO. | BY: | DATE: | S-15 |
| 1 | | | 3 | | | TOTAL SHEETS |
| 2 | | | 4 | | | 35 |

| | | | |
|---|---|---|---|
| DRAWN BY: | H.ASSFOURA | DATE : | 02/15 |
| CHECKED BY: | D. RUGGLES | DATE : | 09/15 |
| DESIGN ENGINEER OF RECORD: | J. LOFTUS | DATE : | 03/16 |

BRIDGE NO: 720026
8/26/2016
...\400_015_17BP5R50_SMU_CD03.dgn
USER:jloftus

DocuSign Envelope ID: D287D744-7745-45ED-A608-C74816553493

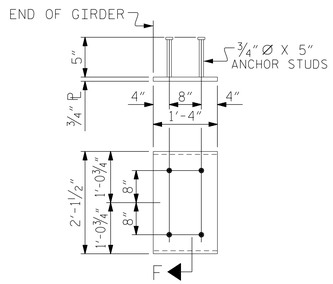


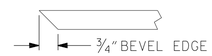


SECTION "F"

(SEE NOTES)

EMBEDDED PLATE "B-1" DETAILS

TWO EMBEDDED PLATES "B-1" ARE REQUIRED FOR EACH GIRDER.

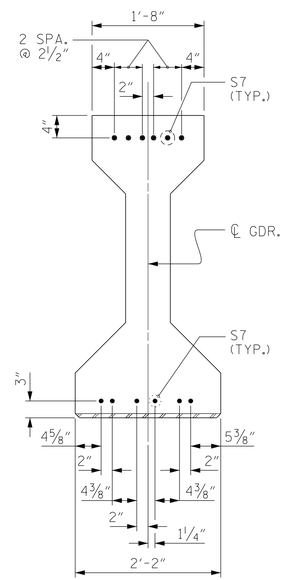


DETAIL "A"

## NOTES

ALL PRESTRESSING STRANDS SHALL BE 7-WIRE LOW-RELAXATION GRADE 270 STRANDS AND SHALL CONFORM TO AASHTO M203 EXCEPT FOR SAMPLING REQUIREMENTS WHICH SHALL BE IN ACCORDANCE WITH THE STANDARD SPECIFICATIONS.

ALL REINFORCING STEEL SHALL BE GRADE 60.

EMBEDDED PLATE "B-1" SHALL BE GALVANIZED IN ACCORDANCE WITH THE STANDARD SPECIFICATIONS. BEVEL EDGES OF PLATE "B-1" TO GIVE CLOSE FIT BUT NOT TIGHT FIT TO STEEL CASTING FORM.

ANCHOR STUDS SHALL CONFORM TO AASHTO M169 GRADES 1010 THROUGH 1020 OR APPROVED EQUAL, AND SHALL MEET THE TYPE "B" REQUIREMENTS OF SUBSECTION 7.3 OF THE ANSI/AASHTO/AWS D1.5 BRIDGE WELDING CODE.

AT ENDS OF GIRDERS TO BE EMBEDDED IN CONCRETE DIAPHRAGMS OR END WALLS, PRESTRESSING STRANDS MAY EXTEND A MAXIMUM OF 2" BEYOND THE GIRDER ENDS. OTHERWISE, PRESTRESSING STRANDS SHALL BE CUT FLUSH WITH THE GIRDER ENDS.

THE TRANSFER OF LOAD FROM THE ANCHORAGES TO THE GIRDER SHALL BE DONE WHEN CONCRETE HAS REACHED A COMPRESSIVE STRENGTH OF NOT LESS THAN 4000 PSI FOR GIRDERS IN SPANS A AND C AND 6000 PSI FOR GIRDERS IN SPAN B.

DEPENDING ON THE TYPE OF SYSTEM USED TO SUPPORT THE DECK SLAB FORMS, PRESET ANCHORS MAY BE NECESSARY IN THE PRESTRESSED CONCRETE GIRDER.

THE TOP SURFACE OF THE GIRDER SHALL BE RAKED TO A DEPTH OF 1"±4" EXCEPT IN THE AREA BETWEEN THE STIRRUP AND THE EDGE OF THE GIRDER.

PROJECT NO. 17BP.5.R.50

FRANKLIN COUNTY

STATION: 15+46.00 -L-

SHEET 4 OF 5

DocuSigned by: Jeff Loftus FE51DC02E679AA9... 8/26/2016

NORTH CAROLINA PROFESSIONAL SEAL 041425 ENGINEER JEFFREY M. LOFTUS

DOCUMENT NOT CONSIDERED FINAL UNLESS ALL SIGNATURES COMPLETED

Firm License No. C-1051
421 Fayetteville St,
Suite 400
Raleigh, NC 27601
T 919.380.8750
www.stewartinc.com

STEWART

STATE OF NORTH CAROLINA
DEPARTMENT OF TRANSPORTATION
RALEIGH

PRESTRESSED CONCRETE GIRDER CONTINUOUS FOR LIVE LOAD DETAILS

| REVISIONS | | | | | | SHEET NO. |
|---|---|---|---|---|---|---|
| NO. | BY: | DATE: | NO. | BY: | DATE: | S-16 |
| 1 | | | 3 | | | TOTAL SHEETS |
| 2 | | | 4 | | | 35 |

| | | | |
|---|---|---|---|
| DRAWN BY: | H.ASSFOURA | DATE : | 02/15 |
| CHECKED BY: | D. RUGGLES | DATE : | 09/15 |
| DESIGN ENGINEER OF RECORD: | J. LOFTUS | DATE : | 03/16 |

BRIDGE NO: 720026

8/26/2016
...\400_016_17BP5R50_SMU_GD04.dgn
USER:jloftus

DocuSign Envelope ID: D287D744-7745-45ED-A608-C74816553493

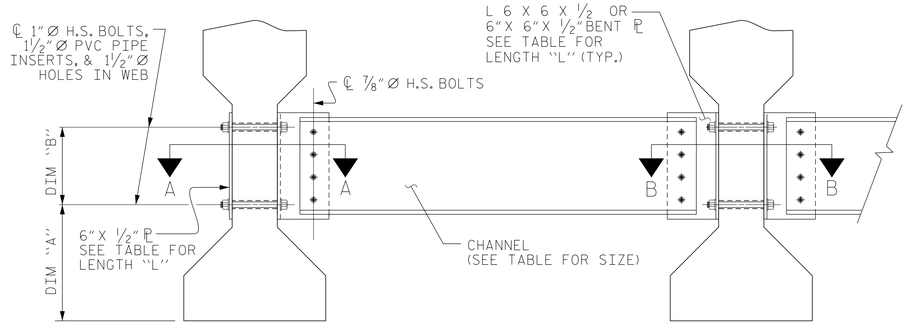


EXTERIOR GIRDER

INTERIOR GIRDER

## PART SECTION AT INTERMEDIATE DIAPHRAGM

( TYPE III OR TYPE IV GIRDER SHOWN )

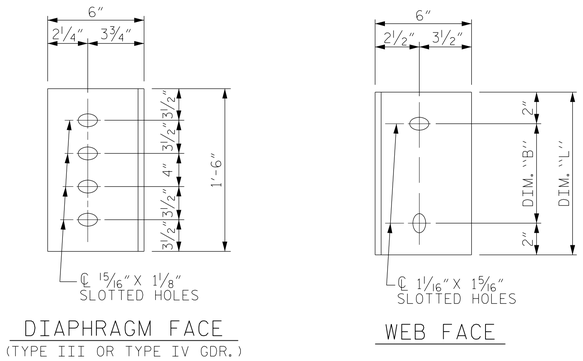


DIAPHRAGM FACE

(TYPE III OR TYPE IV GDR.)

WEB FACE

## CONNECTOR PLATE DETAILS

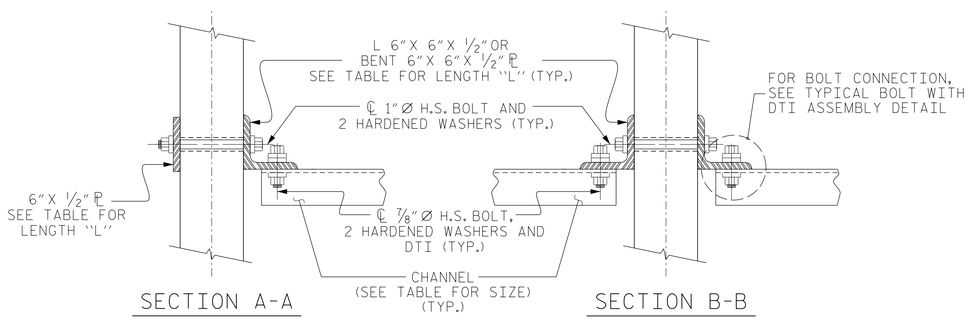


SECTION A-A

SECTION B-B

## CONNECTION DETAILS

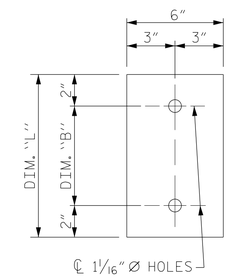


## PLATE DETAILS

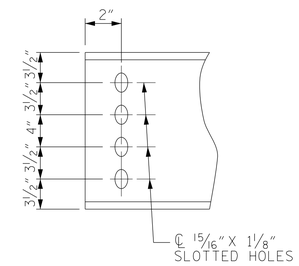


## CHANNEL END

(TYPE III OR TYPE IV GDR.)

## STRUCTURAL STEEL NOTES

ALL INTERMEDIATE DIAPHRAGM STEEL AND CONNECTOR PLATES SHALL BE AASHTO M270 GRADE 50 OR APPROVED EQUAL.

TENSION ON THE ASTM A325 BOLTS THROUGH THE CHANNEL MEMBER SHALL BE CALIBRATED USING DIRECT TENSION INDICATOR WASHERS IN ACCORDANCE WITH THE STANDARD SPECIFICATIONS.

TENSION ON THE ASTM A449 BOLTS THROUGH THE GIRDER WEB SHALL BE SNUG TIGHTENED FOLLOWED BY AN ADDITIONAL ¼ TURN.

THE PLATES, BENT PLATES, CHANNELS, AND ANGLES SHALL BE GALVANIZED OR METALLIZED IN ACCORDANCE WITH THE STANDARD SPECIFICATIONS. FOR THERMAL SPRAYED COATINGS (METALLIZATION), SEE SPECIAL PROVISIONS.

FOR METALLIZATION, APPLY AN 8 MIL THICK 99.99 PERCENT ZINC (W-Zn-1) THERMAL SPRAYED COATING WITH A 0.5 MIL THICK SEAL COAT TO ALL STEEL DIAPHRAGM SURFACES IN ACCORDANCE WITH THE THERMAL SPRAYED COATINGS SPECIAL PROVISION AND SECTION 442 OF THE STANDARD SPECIFICATIONS.

GALVANIZE THE HIGH STRENGTH BOLTS, NUTS, WASHERS AND DIRECT TENSION INDICATORS IN ACCORDANCE WITH THE STANDARD SPECIFICATIONS.

USE AN ASTM F436 HARDENED WASHER WITH STANDARD AND SLOTTED HOLES UNDER EACH BOLT HEAD AND NUT.

FOR BOLTS THROUGH THE GIRDER WEB, PROVIDE SUFFICIENT LENGTH OF THREADS ON ALL BOLTS TO ACCOMMODATE WASHERS AND THE THICKNESS OF CONNECTING MEMBER PLUS AT LEAST ¼" PROJECTION BEYOND THE NUT.

INTERMEDIATE DIAPHRAGM ASSEMBLY SHALL COMPLY WITH SECTION 1072 OF THE STANDARD SPECIFICATIONS.

SUBMIT TWO SETS OF WORKING DRAWINGS FOR THE INTERMEDIATE DIAPHRAGM ASSEMBLY FOR REVIEW, COMMENTS AND ACCEPTANCE. AFTER REVIEW, COMMENTS, AND ACCEPTANCE, SUBMIT SEVEN SETS FOR DISTRIBUTION.

IN THE EXTERIOR BAYS, PLACE TEMPORARY STRUTS BETWEEN PRESTRESSED GIRDERS ADJACENT TO THE STEEL DIAPHRAGMS. STRUTS SHALL REMAIN IN PLACE 3 DAYS AFTER CONCRETE IS PLACED.

THE COST OF THE STEEL DIAPHRAGMS AND ASSEMBLIES SHALL BE INCLUDED IN THE UNIT PRICE BID FOR PRESTRESSED CONCRETE GIRDERS.

## TABLE

| GIRDER TYPE | CHANNEL SIZE | DIM "A" | DIM "B" | DIM "L" |
|---|---|---|---|---|
| IV | MC 18 x 42.7 | 1'-9½" | 1'-2" | 1'-6" |

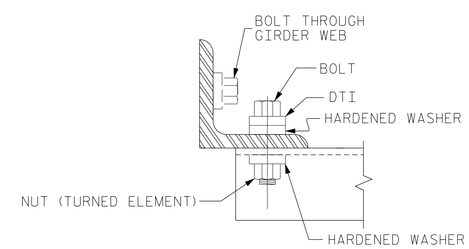


## BOLT WITH DTI ASSEMBLY DETAIL

PROJECT NO. 17BP.5.R.50

FRANKLIN COUNTY

STATION: 15+46.00 -L-

SHEET 5 OF 5

DocuSigned by: Jeff Loftus FE51DD02EE79AA9 8/26/2016

NORTH CAROLINA PROFESSIONAL SEAL 041425 ENGINEER JEFFREY M. LOFTUS

DOCUMENT NOT CONSIDERED FINAL UNLESS ALL SIGNATURES COMPLETED

STEWART

Firm License No. C-1051
421 Fayetteville St,
Suite 400
Raleigh, NC 27601
T 919.380.8750
www.stewartinc.com

STATE OF NORTH CAROLINA
DEPARTMENT OF TRANSPORTATION
RALEIGH

STANDARD
INTERMEDIATE
STEEL DIAPHRAGMS
FOR TYPE II, III, & IV
PRESTRESSED CONCRETE
GIRDERS

| REVISIONS | | | | | | SHEET NO. |
|---|---|---|---|---|---|---|
| NO. | BY: | DATE: | NO. | BY: | DATE: | S-17 |
| 1 | | | 3 | | | TOTAL SHEETS |
| 2 | | | 4 | | | 35 |

| | | | |
|---|---|---|---|
| DRAWN BY: | H.ASSFOURA | DATE : | 02/15 |
| CHECKED BY: | D. RUGGLES | DATE : | 09/15 |
| DESIGN ENGINEER OF RECORD: | J. LOFTUS | DATE : | 03/16 |

BRIDGE NO: 720026

8/26/2016
...\400_017_17BP5R50_SMU_GD05.dgn
USER:jloftus

DocuSign Envelope ID: D287D744-7745-45ED-A608-C74816553493

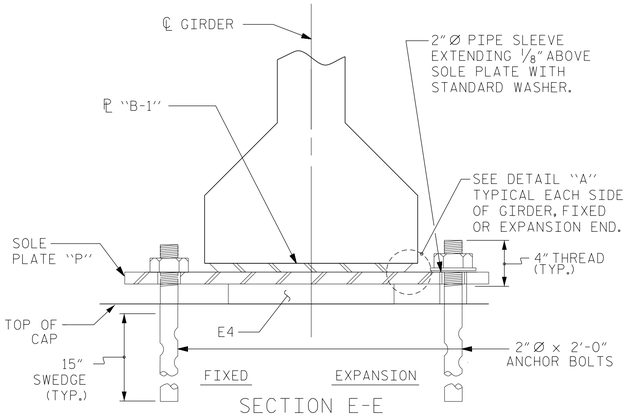


SECTION E-E
AT INTERIOR BENT

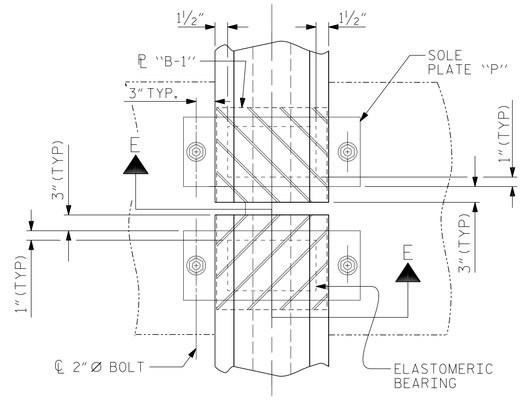


TYPICAL HALF-PLAN
(SHOWING CONTINUOUS BENT)

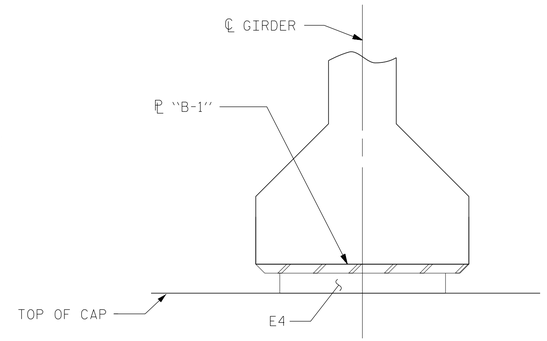


SECTION F-F
AT INTEGRAL END BENT

## NOTES

AT ALL FIXED POINTS OF SUPPORT, NUTS FOR ANCHOR BOLTS ARE TO BE TIGHTENED FINGER TIGHT AND THEN BACKED OFF 1/2 TURN. THE THREAD OF THE NUT AND BOLT SHALL THEN BE BURRED WITH A SHARP POINTED TOOL.

THE 2"Ø PIPE SLEEVE SHALL BE CUT FROM SCHEDULE 40 PVC PLASTIC PIPE. THE PVC PLASTIC PIPE SHALL MEET THE REQUIREMENTS OF ASTM D1785.

STEEL SOLE PLATES, ANCHOR BOLTS, NUTS, AND WASHERS SHALL BE GALVANIZED IN ACCORDANCE WITH THE STANDARD SPECIFICATIONS.

PRIOR TO WELDING, GRIND THE GALVANIZED SURFACE OF THE PORTION OF THE EMBEDDED PLATE AND SOLE PLATE THAT ARE TO BE WELDED. AFTER WELDING, DAMAGED GALVANIZED SURFACES SHALL BE REPAIRED IN ACCORDANCE WITH THE STANDARD SPECIFICATIONS.

WHEN WELDING THE SOLE PLATE TO THE EMBEDDED PLATE IN THE GIRDER, USE TEMPERATURE INDICATING WAX PENS, OR OTHER SUITABLE MEANS, TO ENSURE THAT THE TEMPERATURE OF THE SOLE PLATE DOES NOT EXCEED 300°F. TEMPERATURES ABOVE THIS MAY DAMAGE THE ELASTOMER.

SOLE PLATE "P", BOLTS, NUTS, WASHERS, AND PIPE SLEEVE SHALL BE INCLUDED IN THE PAY ITEM FOR PRESTRESSED CONCRETE GIRDERS.

ANCHOR BOLTS SHALL MEET THE REQUIREMENTS OF ASTM A449. NUTS SHALL MEET THE REQUIREMENTS OF AASHTO M291-DH OR AASHTO M292-2H. WASHERS SHALL MEET THE REQUIREMENTS OF AASHTO M293. NO SHOP DRAWINGS ARE REQUIRED FOR ANCHOR BOLTS, NUTS AND WASHERS. SHOP INSPECTION IS REQUIRED.

ALL SURFACES OF BEARING PLATES SHALL BE SMOOTH AND STRAIGHT.

THE ELASTOMER IN THE STEEL REINFORCED BEARINGS SHALL HAVE A SHEAR MODULUS OF 0.160 KSI, IN ACCORDANCE WITH AASHTO M251.

FOR STEEL REINFORCED ELASTOMERIC BEARINGS, SEE SPECIAL PROVISIONS.

| MAXIMUM ALLOWABLE SERVICE LOADS | |
|---|---|
| D.L.+L.L. (NO IMPACT) | |
| TYPE V | 365 k |

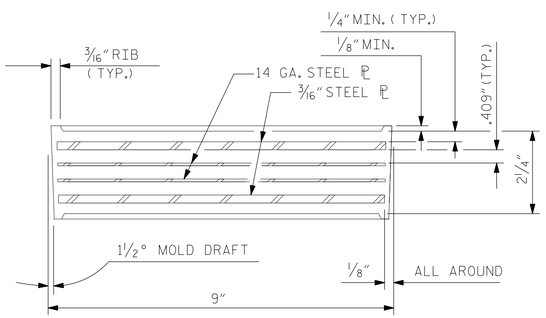


TYPICAL SECTION OF ELASTOMERIC BEARINGS

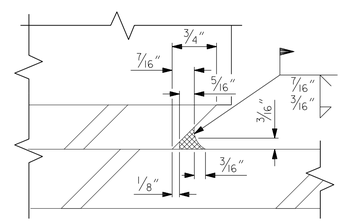


DETAIL "A"

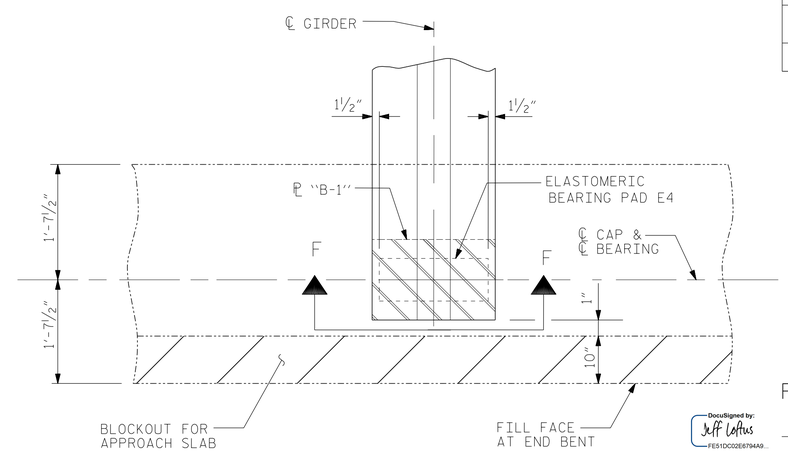


TYPICAL PLAN AT END BENT

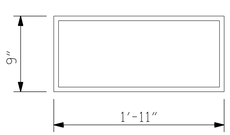


E4 (30 REQ'D)

PLAN VIEW OF ELASTOMERIC BEARING

TYPE V

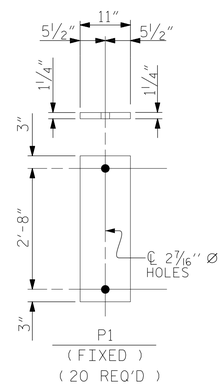


SOLE PLATE DETAILS ("P")

PROJECT NO. 17BP.5.R.50

FRANKLIN COUNTY

STATION: 15+46.00 -L-

DocuSigned by: Jeff Loftus
FE51DC02E6794A9...
8/26/2016

NORTH CAROLINA PROFESSIONAL SEAL 041425 ENGINEER JEFFREY M. LOFTUS

DOCUMENT NOT CONSIDERED FINAL UNLESS ALL SIGNATURES COMPLETED

STEWART
Firm License No. C-1051
421 Fayetteville St,
Suite 400
Raleigh, NC 27601
T 919.380.8750
www.stewartinc.com

STATE OF NORTH CAROLINA
DEPARTMENT OF TRANSPORTATION
RALEIGH

STANDARD

ELASTOMERIC BEARING DETAILS

| REVISIONS | | | | | | SHEET NO. |
|---|---|---|---|---|---|---|
| NO. | BY: | DATE: | NO. | BY: | DATE: | S-18 |
| 1 | | | 3 | | | TOTAL SHEETS |
| 2 | | | 4 | | | 35 |

| | | | |
|---|---|---|---|
| DRAWN BY: | H.ASSFOURA | DATE : | 10/15 |
| CHECKED BY: | D. RUGGLES | DATE : | 10/15 |
| DESIGN ENGINEER OF RECORD: | J. LOFTUS | DATE : | 03/16 |

BRIDGE NO: 720026
8/26/2016
...\400_018_17BP5R50_SMU_BRG01.dgn
USER:jloftus

STD. NO. EB4

DocuSign Envelope ID: D287D744-7745-45ED-A608-C74816553493

## DEAD LOAD DEFLECTION TABLE - SPAN A

0.6 Ø LOW RELAXATION

| GIRDER | TENTH POINTS | ℄ BRG. | 0.1 | 0.2 | 0.3 | 0.4 | 0.5 | 0.6 | 0.7 | 0.8 | 0.9 | ℄ BRG. |
|---|---|---|---|---|---|---|---|---|---|---|---|---|
| A1 | CAMBER (GIRDER ALONE IN PLACE) ▲ | 0 | 0.002 | 0.004 | 0.005 | 0.006 | 0.007 | 0.006 | 0.005 | 0.004 | 0.002 | 0 |
| | ✳ DEFLECTION DUE TO SUPERIMPOSED D.L. ▼ | 0 | 0.001 | 0.002 | 0.003 | 0.004 | 0.004 | 0.004 | 0.003 | 0.003 | 0.002 | 0 |
| | FINAL CAMBER ▲ | 0 | 0 | 0 | 0 | 0 | 1/16" | 0 | 0 | 0 | 0 | 0 |
| A2 | CAMBER (GIRDER ALONE IN PLACE) ▲ | 0 | 0.002 | 0.004 | 0.005 | 0.006 | 0.007 | 0.006 | 0.005 | 0.004 | 0.002 | 0 |
| | ✳ DEFLECTION DUE TO SUPERIMPOSED D.L. ▼ | 0 | 0.001 | 0.003 | 0.004 | 0.004 | 0.005 | 0.005 | 0.004 | 0.003 | 0.002 | 0 |
| | FINAL CAMBER ▲ | 0 | 0 | 0 | 0 | 0 | 0 | 0 | 0 | 0 | 0 | 0 |
| A3 | CAMBER (GIRDER ALONE IN PLACE) ▲ | 0 | 0.002 | 0.004 | 0.005 | 0.006 | 0.007 | 0.006 | 0.005 | 0.004 | 0.002 | 0 |
| | ✳ DEFLECTION DUE TO SUPERIMPOSED D.L. ▼ | 0 | 0.001 | 0.003 | 0.004 | 0.004 | 0.005 | 0.005 | 0.004 | 0.003 | 0.002 | 0 |
| | FINAL CAMBER ▲ | 0 | 0 | 0 | 0 | 0 | 0 | 0 | 0 | 0 | 0 | 0 |
| A4 | CAMBER (GIRDER ALONE IN PLACE) ▲ | 0 | 0.002 | 0.004 | 0.005 | 0.006 | 0.007 | 0.006 | 0.005 | 0.004 | 0.002 | 0 |
| | ✳ DEFLECTION DUE TO SUPERIMPOSED D.L. ▼ | 0 | 0.001 | 0.003 | 0.004 | 0.004 | 0.005 | 0.005 | 0.004 | 0.003 | 0.002 | 0 |
| | FINAL CAMBER ▲ | 0 | 0 | 0 | 0 | 0 | 0 | 0 | 0 | 0 | 0 | 0 |
| A5 | CAMBER (GIRDER ALONE IN PLACE) ▲ | 0 | 0.002 | 0.004 | 0.005 | 0.006 | 0.007 | 0.006 | 0.005 | 0.004 | 0.002 | 0 |
| | ✳ DEFLECTION DUE TO SUPERIMPOSED D.L. ▼ | 0 | 0.001 | 0.002 | 0.003 | 0.004 | 0.004 | 0.004 | 0.003 | 0.003 | 0.002 | 0 |
| | FINAL CAMBER ▲ | 0 | 0 | 0 | 0 | 0 | 1/16" | 0 | 0 | 0 | 0 | 0 |

## DEAD LOAD DEFLECTION TABLE - SPAN C

0.6 Ø LOW RELAXATION

| GIRDER | TENTH POINTS | ℄ BRG. | 0.1 | 0.2 | 0.3 | 0.4 | 0.5 | 0.6 | 0.7 | 0.8 | 0.9 | ℄ BRG. |
|---|---|---|---|---|---|---|---|---|---|---|---|---|
| C1 | CAMBER (GIRDER ALONE IN PLACE) ▲ | 0 | 0.002 | 0.004 | 0.005 | 0.006 | 0.007 | 0.006 | 0.005 | 0.004 | 0.002 | 0 |
| | ✳ DEFLECTION DUE TO SUPERIMPOSED D.L. ▼ | 0 | 0.002 | 0.003 | 0.003 | 0.004 | 0.004 | 0.004 | 0.003 | 0.002 | 0.001 | 0 |
| | FINAL CAMBER ▲ | 0 | 0 | 0 | 0 | 0 | 1/16" | 0 | 0 | 0 | 0 | 0 |
| C2 | CAMBER (GIRDER ALONE IN PLACE) ▲ | 0 | 0.002 | 0.004 | 0.005 | 0.006 | 0.007 | 0.006 | 0.005 | 0.004 | 0.002 | 0 |
| | ✳ DEFLECTION DUE TO SUPERIMPOSED D.L. ▼ | 0 | 0.002 | 0.003 | 0.004 | 0.005 | 0.005 | 0.004 | 0.004 | 0.003 | 0.001 | 0 |
| | FINAL CAMBER ▲ | 0 | 0 | 0 | 0 | 0 | 0 | 0 | 0 | 0 | 0 | 0 |
| C3 | CAMBER (GIRDER ALONE IN PLACE) ▲ | 0 | 0.002 | 0.004 | 0.005 | 0.006 | 0.007 | 0.006 | 0.005 | 0.004 | 0.002 | 0 |
| | ✳ DEFLECTION DUE TO SUPERIMPOSED D.L. ▼ | 0 | 0.002 | 0.003 | 0.004 | 0.005 | 0.005 | 0.004 | 0.004 | 0.003 | 0.001 | 0 |
| | FINAL CAMBER ▲ | 0 | 0 | 0 | 0 | 0 | 0 | 0 | 0 | 0 | 0 | 0 |
| C4 | CAMBER (GIRDER ALONE IN PLACE) ▲ | 0 | 0.002 | 0.004 | 0.005 | 0.006 | 0.007 | 0.006 | 0.005 | 0.004 | 0.002 | 0 |
| | ✳ DEFLECTION DUE TO SUPERIMPOSED D.L. ▼ | 0 | 0.002 | 0.003 | 0.004 | 0.005 | 0.005 | 0.004 | 0.004 | 0.003 | 0.001 | 0 |
| | FINAL CAMBER ▲ | 0 | 0 | 0 | 0 | 0 | 0 | 0 | 0 | 0 | 0 | 0 |
| C5 | CAMBER (GIRDER ALONE IN PLACE) ▲ | 0 | 0.002 | 0.004 | 0.005 | 0.006 | 0.007 | 0.006 | 0.005 | 0.004 | 0.002 | 0 |
| | ✳ DEFLECTION DUE TO SUPERIMPOSED D.L. ▼ | 0 | 0.002 | 0.003 | 0.003 | 0.004 | 0.004 | 0.004 | 0.003 | 0.002 | 0.001 | 0 |
| | FINAL CAMBER ▲ | 0 | 0 | 0 | 0 | 0 | 1/16" | 0 | 0 | 0 | 0 | 0 |

## DEAD LOAD DEFLECTION TABLE - SPAN B

0.6 Ø LOW RELAXATION

| GIRDER | TWENTIETH POINTS | ℄ BRG. | 0.05 | 0.1 | 0.15 | 0.20 | 0.25 | 0.30 | 0.35 | 0.40 | 0.45 | 0.50 | 0.55 | 0.60 | 0.65 | 0.70 | 0.75 | 0.80 | 0.85 | 0.90 | 0.95 | ℄ BRG. |
|---|---|---|---|---|---|---|---|---|---|---|---|---|---|---|---|---|---|---|---|---|---|---|
| B1 | CAMBER (GIRDER ALONE IN PLACE) ▲ | 0 | 0.035 | 0.070 | 0.102 | 0.132 | 0.158 | 0.180 | 0.196 | 0.211 | 0.217 | 0.222 | 0.217 | 0.211 | 0.1996 | 0.180 | 0.158 | 0.132 | 0.102 | 0.070 | 0.035 | 0 |
| | ✳ DEFLECTION DUE TO SUPERIMPOSED D.L. ▼ | 0 | 0.030 | 0.061 | 0.091 | 0.121 | 0.145 | 0.169 | 0.184 | 0.199 | 0.204 | 0.210 | 0.204 | 0.199 | 0.184 | 0.169 | 0.145 | 0.121 | 0.091 | 0.061 | 0.030 | 0 |
| | FINAL CAMBER ▲ | 0 | 1/16" | 1/8" | 1/8" | 1/8" | 1/8" | 1/8" | 1/8" | 1/8" | 1/8" | 1/8" | 1/8" | 1/8" | 1/8" | 1/8" | 1/8" | 1/8" | 1/8" | 1/8" | 1/16" | 0 |
| B2 | CAMBER (GIRDER ALONE IN PLACE) ▲ | 0 | 0.035 | 0.070 | 0.102 | 0.132 | 0.158 | 0.180 | 0.196 | 0.211 | 0.217 | 0.222 | 0.217 | 0.211 | 0.1996 | 0.180 | 0.158 | 0.132 | 0.102 | 0.070 | 0.035 | 0 |
| | ✳ DEFLECTION DUE TO SUPERIMPOSED D.L. ▼ | 0 | 0.035 | 0.069 | 0.102 | 0.136 | 0.163 | 0.190 | 0.207 | 0.224 | 0.230 | 0.236 | 0.230 | 0.224 | 0.207 | 0.190 | 0.163 | 0.136 | 0.102 | 0.069 | 0.035 | 0 |
| | FINAL DEFLECTION ▼ | 0 | 0 | 0 | 0 | 1/16" | 1/16" | 1/8" | 1/8" | 1/8" | 1/8" | 3/16" | 1/8" | 1/8" | 1/8" | 1/8" | 1/16" | 1/16" | 0 | 0 | 0 | 0 |
| B3 | CAMBER (GIRDER ALONE IN PLACE) ▲ | 0 | 0.035 | 0.070 | 0.102 | 0.132 | 0.158 | 0.180 | 0.196 | 0.211 | 0.217 | 0.222 | 0.217 | 0.211 | 0.1996 | 0.180 | 0.158 | 0.132 | 0.102 | 0.070 | 0.035 | 0 |
| | ✳ DEFLECTION DUE TO SUPERIMPOSED D.L. ▼ | 0 | 0.035 | 0.069 | 0.102 | 0.136 | 0.163 | 0.190 | 0.207 | 0.224 | 0.230 | 0.236 | 0.230 | 0.224 | 0.207 | 0.190 | 0.163 | 0.136 | 0.102 | 0.069 | 0.035 | 0 |
| | ▼ | 0 | 0 | 0 | 0 | 1/16" | 1/16" | 1/8" | 1/8" | 1/8" | 1/8" | 3/16" | 1/8" | 1/8" | 1/8" | 1/8" | 1/16" | 1/16" | 0 | 0 | 0 | 0 |
| B4 | CAMBER (GIRDER ALONE IN PLACE) ▲ | 0 | 0.035 | 0.070 | 0.102 | 0.132 | 0.158 | 0.180 | 0.196 | 0.211 | 0.217 | 0.222 | 0.217 | 0.211 | 0.1996 | 0.180 | 0.158 | 0.132 | 0.102 | 0.070 | 0.035 | 0 |
| | ✳ DEFLECTION DUE TO SUPERIMPOSED D.L. ▼ | 0 | 0.035 | 0.069 | 0.102 | 0.136 | 0.163 | 0.190 | 0.207 | 0.224 | 0.230 | 0.236 | 0.230 | 0.224 | 0.207 | 0.190 | 0.163 | 0.136 | 0.102 | 0.069 | 0.035 | 0 |
| | FINAL DEFLECTION ▼ | 0 | 0 | 0 | 0 | 1/16" | 1/16" | 1/8" | 1/8" | 1/8" | 1/8" | 3/16" | 1/8" | 1/8" | 1/8" | 1/8" | 1/16" | 1/16" | 0 | 0 | 0 | 0 |
| B5 | CAMBER (GIRDER ALONE IN PLACE) ▲ | 0 | 0.035 | 0.070 | 0.102 | 0.132 | 0.158 | 0.180 | 0.196 | 0.211 | 0.217 | 0.222 | 0.217 | 0.211 | 0.1996 | 0.180 | 0.158 | 0.132 | 0.102 | 0.070 | 0.035 | 0 |
| | ✳ DEFLECTION DUE TO SUPERIMPOSED D.L. ▼ | 0 | 0.030 | 0.061 | 0.091 | 0.121 | 0.145 | 0.169 | 0.184 | 0.199 | 0.204 | 0.210 | 0.204 | 0.199 | 0.184 | 0.169 | 0.145 | 0.121 | 0.091 | 0.061 | 0.030 | 0 |
| | FINAL CAMBER ▲ | 0 | 1/16" | 1/8" | 1/8" | 1/8" | 1/8" | 1/8" | 1/8" | 1/8" | 1/8" | 1/8" | 1/8" | 1/8" | 1/8" | 1/8" | 1/8" | 1/8" | 1/8" | 1/8" | 1/16" | 0 |

✳ INCLUDES FUTURE WEARING SURFACE

ALL VALUES ARE SHOWN IN FEET (DECIMAL FORMAT), EXCEPT "FINAL CAMBER", WHICH IS GIVEN IN INCHES

PROJECT NO. 17BP.5.R.50

FRANKLIN COUNTY

STATION: 15+46.00 -L-

DocuSigned by: Jeff Loftus FE51DC02E679A43... 8/26/2016

NORTH CAROLINA PROFESSIONAL SEAL 041425 ENGINEER JEFFREY M. LOFTUS

DOCUMENT NOT CONSIDERED FINAL UNLESS ALL SIGNATURES COMPLETED

STEWART
Firm License No. C-1051
421 Fayetteville St,
Suite 400
Raleigh, NC 27601
T 919.380.8750
www.stewartinc.com

STATE OF NORTH CAROLINA
DEPARTMENT OF TRANSPORTATION
RALEIGH

DEAD LOAD DEFLECTION FOR PRESTRESSED CONCRETE GIRDER

| REVISIONS | | | | | | SHEET NO. |
|---|---|---|---|---|---|---|
| NO. | BY: | DATE: | NO. | BY: | DATE: | S-19 |
| 1 | | | 3 | | | TOTAL SHEETS |
| 2 | | | 4 | | | 35 |

DRAWN BY: H.ASSFOURA DATE: 03/15
CHECKED BY: J. LOFTUS DATE: 09/15
DESIGN ENGINEER OF RECORD: J. LOFTUS DATE: 03/16

BRIDGE NO: 720026
8/26/2016
..\400_019_17BP5R50_SMU_DEF01.dgn
USER:jloftus

DocuSign Envelope ID: D287D744-7745-45ED-A608-C74816553493

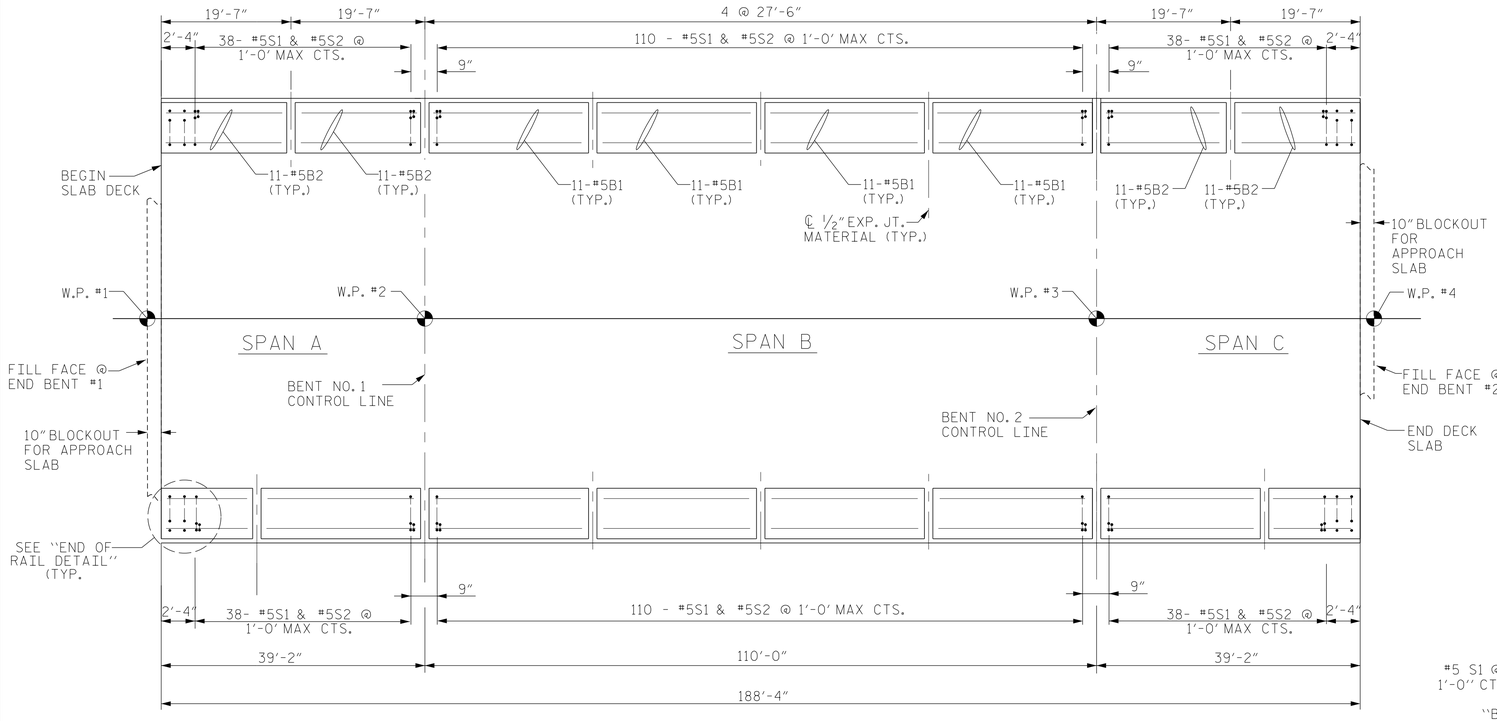


PLAN

## NOTES

THE BARRIER RAIL IN EACH SPAN SHALL NOT BE CAST UNTIL ALL SLAB CONCRETE IN THAT SPAN HAS BEEN CAST AND HAS REACHED A MINIMUM COMPRESSIVE STRENGTH OF 3,000 PSI.

WHEN FOAM JOINT SEAL IS REQUIRED, THE JOINT IN THE DECK SHALL BE SAWED PRIOR TO THE CASTING OF BARRIER RAIL.

ALL REINFORCING STEEL IN BARRIER RAILS SHALL BE EPOXY COATED.

THE #5 S3, S4, S5 AND S6 BARS SHALL BE INSTALLED, USING AN ADHESIVE ANCHORING SYSTEM, AFTER SAWING THE JOINT. THE YIELD LOAD FOR THE #5 S3, S4, S5 AND S6 BARS IS 18.6 KIPS. FIELD TESTING FOR THE ADHESIVE BONDING SYSTEM IS NOT REQUIRED.

GROOVED CONTRACTION JOINTS, 1/2" IN DEPTH, SHALL BE TOOLED IN ALL EXPOSED FACES OF THE BARRIER RAIL AND IN ACCORDANCE WITH ARTICLE 825-10(B) OF THE STANDARD SPECIFICATIONS. THE CONTRACTION JOINT SHALL BE LOCATED AT EACH THIRD POINT BETWEEN BARRIER RAIL EXPANSION JOINTS. ONLY ONE CONTRACTION JOINT IS REQUIRED AT MIDPOINT OF BARRIER RAIL SEGMENTS LESS THAN 20 FEET IN LENGTH AND NO CONTRACTION JOINTS ARE REQUIRED FOR THOSE SEGMENTS LESS THAN 10 FEET IN LENGTH.

## BAR TYPES

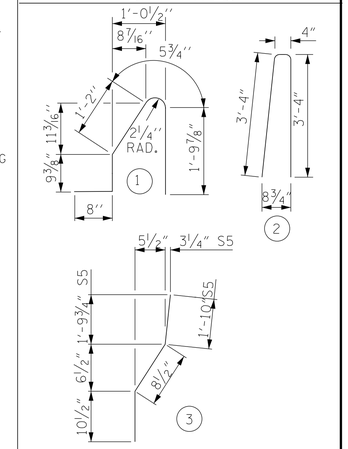


ALL BAR DIMENSIONS ARE OUT TO OUT

BILL OF MATERIAL

FOR CONCRETE BARRIER RAIL ONLY

| BAR | NO. | SIZE | TYPE | LENGTH | WEIGHT |
|---|---|---|---|---|---|
| * S1 | 372 | #5 | 1 | 4'-11" | 1908 |
| * S2 | 372 | #5 | 2 | 7'-0" | 2716 |
| * S5 | 8 | #5 | 3 | 3'-5" | 29 |
| * S6 | 8 | #5 | STR | 3'-3" | 27 |
| * B1 | 88 | #5 | STR | 27'-1" | 2486 |
| * B2 | 88 | #5 | STR | 19'-2" | 1759 |

* EPOXY COATED REINFORCING STEEL 8925 LBS.
CLASS AA CONCRETE 51.1 CU. YDS.
CONCRETE BARRIER RAIL 376.67 LIN. FT.

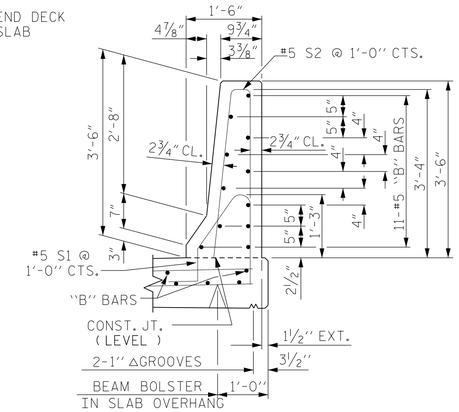


SECTION THRU RAIL

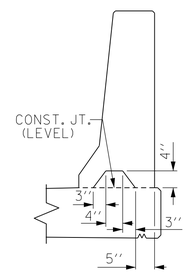


SECTION S-S

AT DAM IN OPEN JOINT (THIS IS TO BE USED ONLY WHEN SLIP FORM IS USED)

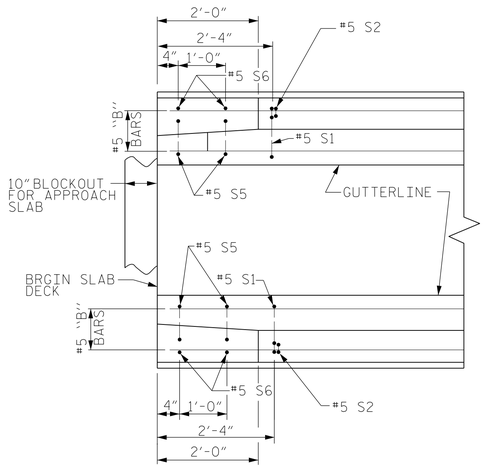


PLAN

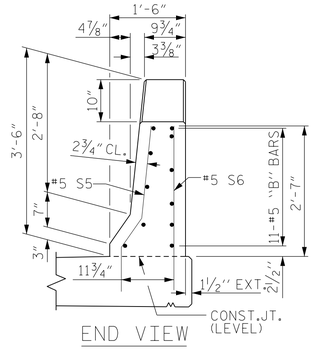


END VIEW

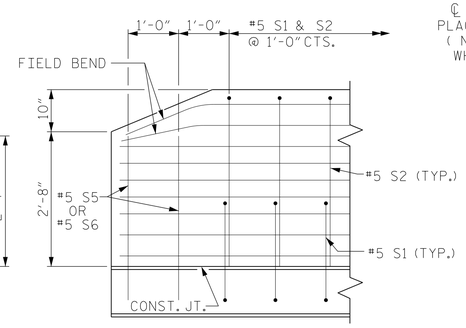


SIDE VIEW

END OF RAIL DETAILS

FOR ADHESIVE ANCHORING AT SAWED JOINTS

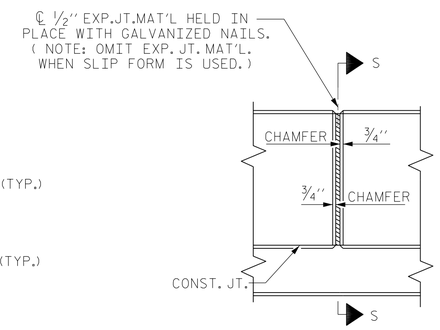


ELEVATION AT EXPANSION JOINTS

BARRIER RAIL DETAILS

DocuSigned by: Jeff Loftus FE51DC02E679AA9... 8/26/2016

NORTH CAROLINA PROFESSIONAL SEAL 041425 ENGINEER JEFFREY M. LOFTUS

DOCUMENT NOT CONSIDERED FINAL UNLESS ALL SIGNATURES COMPLETED

PROJECT NO. 17BP.5.R.50

FRANKLIN COUNTY

STATION: 15+46.00 -L-

STATE OF NORTH CAROLINA
DEPARTMENT OF TRANSPORTATION
RALEIGH

STANDARD

CONCRETE BARRIER RAIL

STEWART
Firm License No. C-1051
421 Fayetteville St,
Suite 400
Raleigh, NC 27601
T 919.380.8750
www.stewartinc.com

| REVISIONS | | | | | | SHEET NO. |
|---|---|---|---|---|---|---|
| NO. | BY: | DATE: | NO. | BY: | DATE: | S-20 |
| 1 | | | 3 | | | TOTAL SHEETS |
| 2 | | | 4 | | | 35 |

STD. NO. CBR1

| | | | |
|---|---|---|---|
| DRAWN BY: | H.ASSFOURA | DATE : | 03/15 |
| CHECKED BY: | J. LOFTUS | DATE : | 10/15 |
| DESIGN ENGINEER OF RECORD: | J. LOFTUS | DATE : | 03/16 |

BRIDGE NO: 720026

8/26/2016
...\400_020_17BP5R50_SMU_BR01.dgn
USER:jloftus

DocuSign Envelope ID: D287D744-7745-45ED-A608-C74816553493

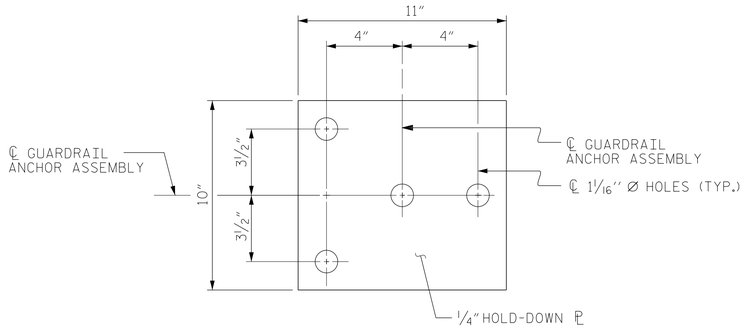


PLAN

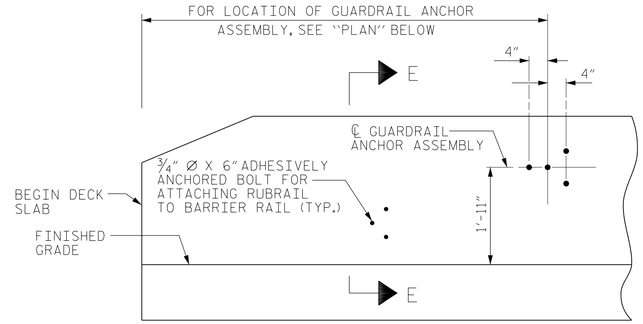


ELEVATION

## NOTES

THE GUARDRAIL ANCHOR ASSEMBLY SHALL CONSIST OF A 1/4" HOLD-DOWN PLATE AND 4 - 7/8" Ø BOLTS WITH NUTS AND WASHERS, RUBRAIL, AND ADHESIVELY ANCHORED BOLTS.

THE HOLD-DOWN PLATE SHALL CONFORM TO AASHTO M270 GRADE 36. AFTER FABRICATION, THE HOLD-DOWN PLATE SHALL BE HOT-DIP GALVANIZED IN ACCORDANCE WITH AASHTO M111.

BOLTS SHALL CONFORM TO THE REQUIREMENTS OF ASTM A307 AND NUTS SHALL CONFORM TO THE REQUIREMENTS OF AASHTO M291. BOLTS, NUTS AND WASHERS SHALL BE GALVANIZED. (AT THE CONTRACTOR'S OPTION, STAINLESS STEEL BOLTS, NUTS AND WASHERS MAY BE USED AS AN ALTERNATE FOR THE 7/8" Ø GALVANIZED BOLTS, NUTS AND WASHERS. THEY SHALL CONFORM TO OR EXCEED THE MECHANICAL REQUIREMENTS OF ASTM A307. THE USE OF THIS ALTERNATE SHALL BE APPROVED BY THE ENGINEER.)

THE GUARDRAIL ANCHOR ASSEMBLY IS REQUIRED AT ALL POINTS WHERE APPROACH GUARDRAIL IS TO BE ATTACHED TO THE END OF BARRIER RAIL. FOR POINTS OF ATTACHMENT, SEE SKETCH.

AFTER INSTALLATION, THE EXPOSED THREAD OF THE BOLT SHALL BE BURRED WITH A SHARP POINTED TOOL.

THE COST OF THE GUARDRAIL ANCHOR ASSEMBLY SHALL BE INCLUDED IN THE UNIT CONTRACT PRICE BID FOR CONCRETE BARRIER RAIL.

THE 1 1/4" Ø HOLES SHALL BE FORMED OR DRILLED WITH A CORE BIT. IMPACT TOOLS WILL NOT BE PERMITTED. ANY CONCRETE DAMAGED BY THIS WORK SHALL BE REPAIRED TO THE SATISFACTION OF THE ENGINEER.

THE C6 X 8.2 RUBRAIL IS TO BE ADHESIVELY ANCHORED TO THE RAIL USING THREE 3/4" Ø X 6" BOLTS WITH WASHERS. LEVEL ONE FIELD TESTING IS REQUIRED, AND THE YIELD LOAD OF THE 3/4" Ø BOLT IS 12 KIPS. FOR ADHESIVELY ANCHORED ANCHOR BOLTS OR DOWELS, SEE STANDARD SPECIFICATIONS. SEE ROADWAY STANDARD 862.03 FOR DETAILS AND LOCATION OF THE RUBRAIL.

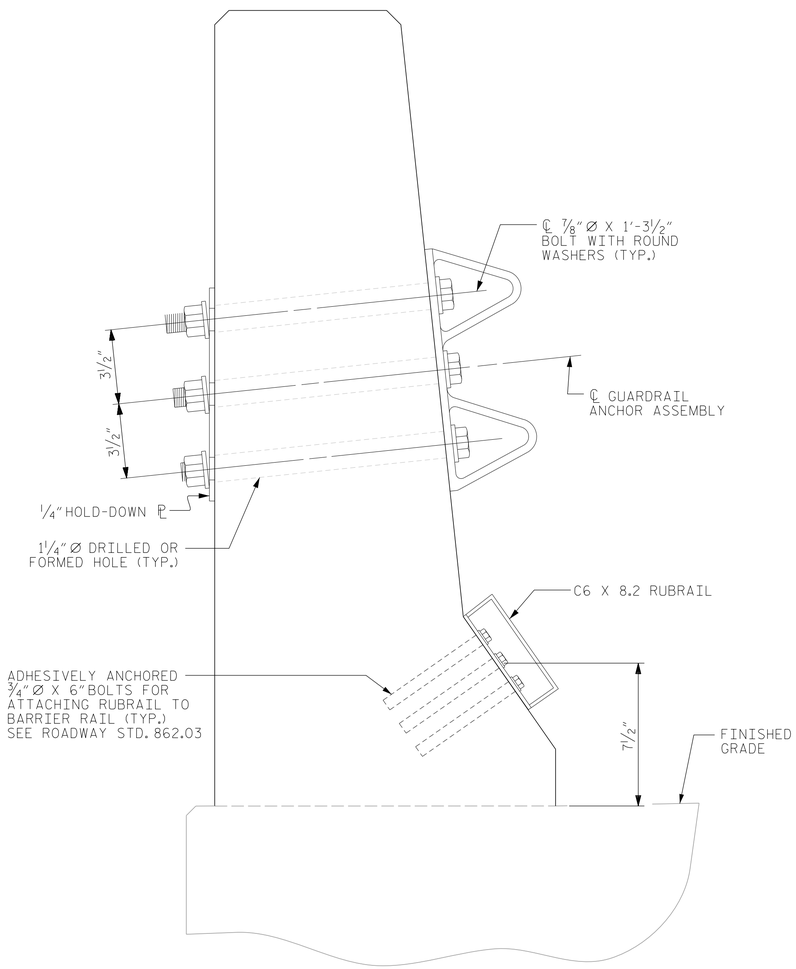


SECTION E-E

## GUARDRAIL ANCHOR ASSEMBLY DETAILS

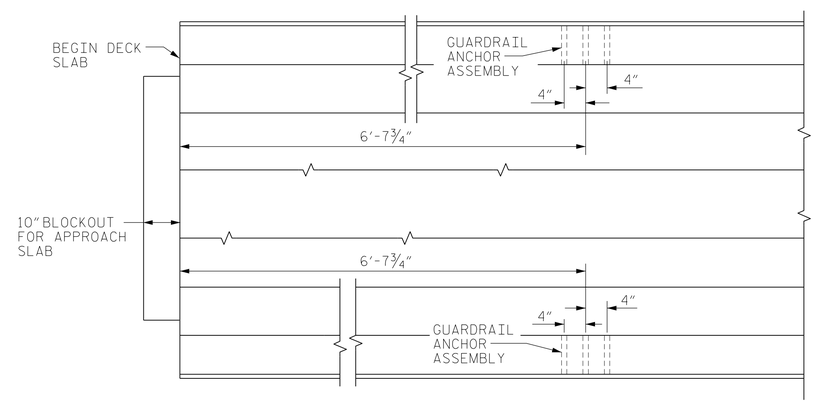


PLAN

## LOCATION OF ANCHORS FOR GUARDRAIL

END BENT #1 SHOWN, END BENT #2 SIMILAR.

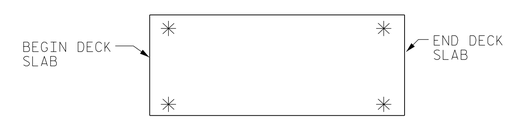


SKETCH SHOWING POINTS OF ATTACHMENTS

✳ DENOTES GUARDRAIL ANCHOR ASSEMBLY

PROJECT NO. 17BP.5.R.50

FRANKLIN COUNTY

STATION: 15+46.00 -L-

DocuSigned by: Jeff Loftus FE51DC02E679A42 8/26/2016

NORTH CAROLINA PROFESSIONAL SEAL 041425 ENGINEER JEFFREY M. LOFTUS

DOCUMENT NOT CONSIDERED FINAL UNLESS ALL SIGNATURES COMPLETED

Firm License No. C-1051
421 Fayetteville St,
Suite 400
Raleigh, NC 27601
T 919.380.8750
www.stewartinc.com
STEWART

STATE OF NORTH CAROLINA
DEPARTMENT OF TRANSPORTATION
RALEIGH

STANDARD

GUARDRAIL ANCHORAGE FOR BARRIER RAIL

| REVISIONS | | | | | | SHEET NO. |
|---|---|---|---|---|---|---|
| NO. | BY: | DATE: | NO. | BY: | DATE: | S-21 |
| 1 | | | 3 | | | TOTAL SHEETS |
| 2 | | | 4 | | | 35 |

STD. NO. GRA2

| | | | |
|---|---|---|---|
| DRAWN BY: | H.ASSFOURA | DATE : | 10/15 |
| CHECKED BY: | D. RUGGLES | DATE : | 10/15 |
| DESIGN ENGINEER OF RECORD: | J. LOFTUS | DATE : | 03/16 |

BRIDGE NO: 720026

8/26/2016
...\400_021_17BP5R50_SMU_GRA01.dgn
USER:jloftus

DocuSign Envelope ID: D287D744-7745-45ED-A608-C74816553493

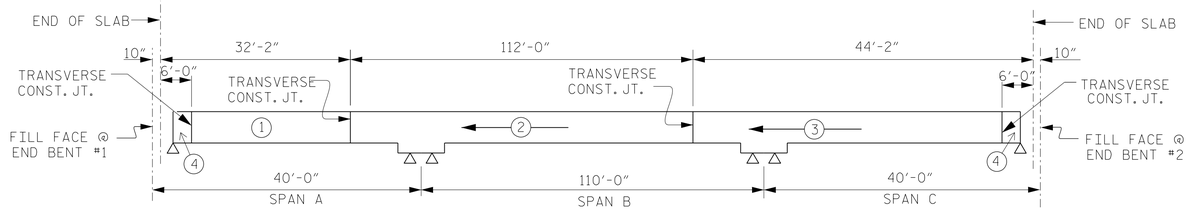


## POURING SEQUENCE

CONCRETE IN THE UPPER PORTION OF THE WINGS IS INCLUDED WITH SUPERSTRUCTURE CONCRETE QUANTITY

—(#)— = INDICATES POUR NUMBER AND DIRECTION OF POUR

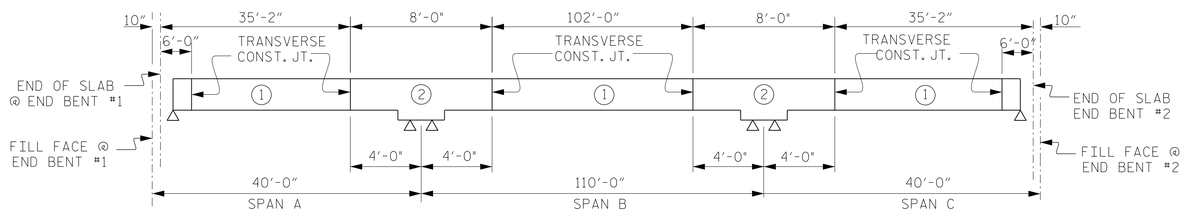


## OPTIONAL POURING SEQUENCE

(#) = INDICATES POUR NUMBER

| GROOVING BRIDGE FLOORS | | |
|---|---|---|
| APPROACH SLABS | 1,061 | SQ.FT. |
| BRIDGE DECK | 6,968 | SQ.FT. |
| TOTAL | 8,029 | SQ.FT. |

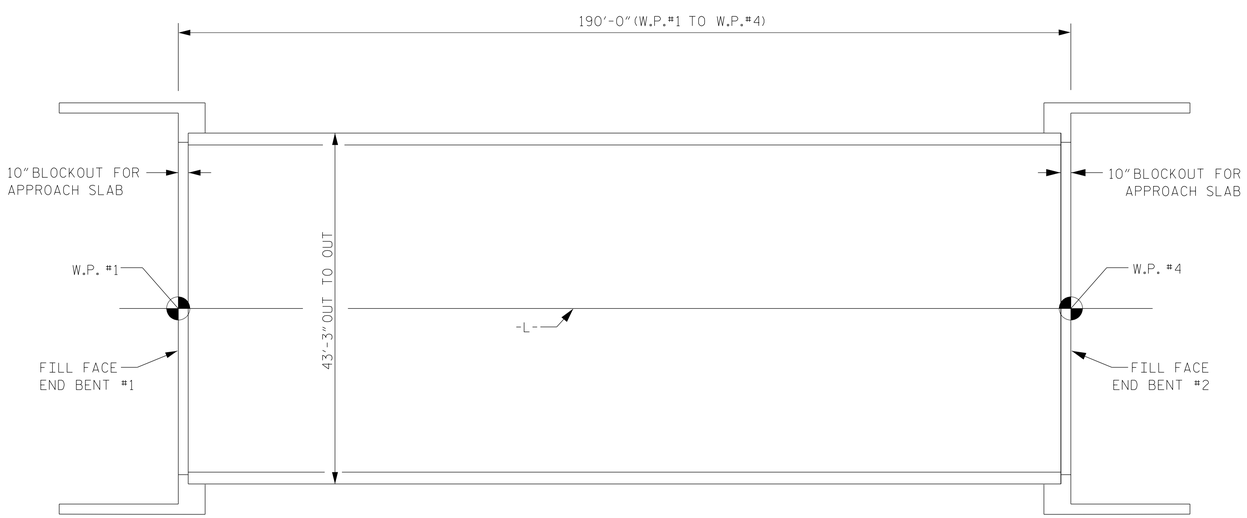


## LAYOUT FOR COMPUTING AREA REINFORCED CONCRETE DECK SLAB (SQ. FT. = 8,218)

## BAR TYPES

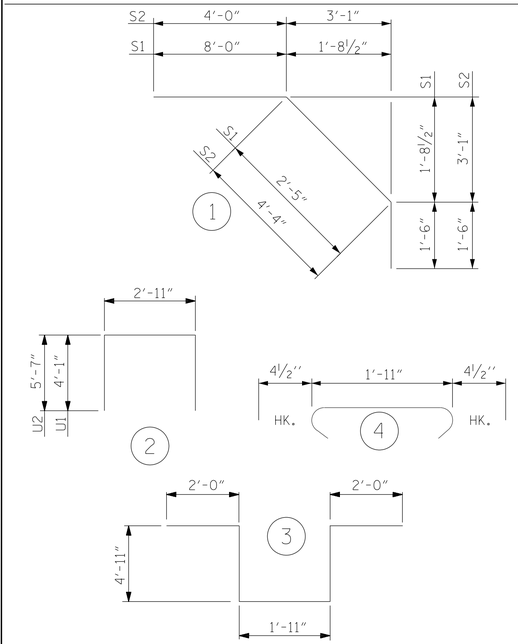


ALL DIMENSIONS ARE OUT TO OUT

## BILL OF MATERIAL

| BAR | NO. | SIZE | TYPE | LENGTH | WEIGHT |
|---|---|---|---|---|---|
| *A1 | 348 | #5 | STR | 42'-10" | 15,547 |
| A2 | 348 | #5 | STR | 42'-10" | 15,547 |
| | | | | | |
| *B1 | 210 | #4 | STR | 28'-7" | 4,010 |
| *B2 | 112 | #6 | STR | 10'-0" | 1,682 |
| *B3 | 112 | #6 | STR | 22'-6" | 3,785 |
| B4 | 184 | #5 | STR | 48'-8" | 9,340 |
| | | | | | |
| K1 | 20 | #4 | STR | 25'-8" | 343 |
| K2 | 16 | #4 | STR | 8'-3" | 88 |
| K3 | 8 | #4 | STR | 6'-9" | 36 |
| K4 | 8 | #4 | STR | 7'-9" | 41 |
| K5 | 8 | #4 | STR | 7'-3" | 39 |
| K6 | 8 | #4 | STR | 5'-5" | 29 |
| K7 | 4 | #4 | STR | 4'-8" | 12 |
| K8 | 4 | #4 | STR | 5'-2" | 14 |
| K9 | 4 | #4 | STR | 4'-11" | 13 |
| K10 | 20 | #4 | STR | 19'-8" | 263 |
| K11 | 32 | #4 | STR | 8'-3" | 176 |
| K12 | 16 | #4 | STR | 6'-9" | 72 |
| K13 | 16 | #4 | STR | 7'-9" | 83 |
| K14 | 16 | #4 | STR | 7'-3" | 77 |
| | | | | | |
| * S1 | 72 | #4 | 1 | 11'-11" | 573 |
| *S2 | 72 | #4 | 1 | 9'-10" | 473 |
| S3 | 64 | #4 | 3 | 15'-9" | 673 |
| S4 | 256 | #4 | 4 | 2'-8" | 456 |
| | | | | | |
| U1 | 72 | #4 | 2 | 11'-1" | 533 |
| U2 | 12 | #4 | 2 | 14'-1" | 113 |
| | | | | | |
| V2 | 128 | #5 | STR | 5'-7" | 745 |
| | | | | | |
| H1 | 48 | #6 | STR | 17'-5" | 1,256 |
| H2 | 48 | #6 | STR | 15'-5" | 1,111 |

## SUPERSTRUCTURE BILL OF MATERIAL

| | CLASS AA CONCRETE | REINFORCING STEEL | EPOXY COATED REINFORCING STEEL |
|---|---|---|---|
| | (CU. YDS.) | (LBS.) | (LBS.) |
| POUR #1 | 41.9 | | |
| POUR #2 | 194.7 | | |
| POUR #3 | 76.4 | | |
| POUR #4 | 73.4 | | |
| | | | |
| TOTALS** | 386.4 | 31,060 | 26,070 |

* DENOTES EPOXY COATED REINFORCING STEEL

** QUANTITIES FOR CONCRETE BARRIER RAIL ARE NOT INCLUDED

## SUPERSTRUCTURE REINFORCING STEEL LENGTHS ARE BASED ON THE FOLLOWING MINIMUM SPLICE LENGTHS

| BAR SIZE | SUPERSTRUCTURE EXCEPT APPROACH SLABS, PARAPET, AND BARRIER RAIL | | APPROACH SLABS | | PARAPET AND BARRIER RAIL |
|---|---|---|---|---|---|
| | EPOXY COATED | UNCOATED | EPOXY COATED | UNCOATED | |
| #4 | 2'-0" | 1'-9" | 2'-0" | 1'-9" | 2'-9" |
| #5 | 2'-6" | 2'-2" | 2'-6" | 2'-2" | 3'-5" |
| #6 | 3'-0" | 2'-7" | 3'-10" | 2'-7" | 4'-4" |
| #7 | 5'-3" | 3'-6" | | | |
| #8 | 6'-10" | 4'-7" | | | |

DocuSigned by: Jeff Loftus FE51DC02E6794AC... 8/26/2016

NORTH CAROLINA PROFESSIONAL SEAL 041425 ENGINEER JEFFREY M. LOFTUS

DOCUMENT NOT CONSIDERED FINAL UNLESS ALL SIGNATURES COMPLETED

PROJECT NO. 17BP.5.R.50

FRANKLIN COUNTY

STATION: 15+46.00 -L-

STATE OF NORTH CAROLINA
DEPARTMENT OF TRANSPORTATION
RALEIGH

SUPERSTRUCTURE BILL OF MATERIAL

STEWART
Firm License No. C-1051
421 Fayetteville St,
Suite 400
Raleigh, NC 27601
T 919.380.8750
www.stewartinc.com

| REVISIONS | | | | | | SHEET NO. |
|---|---|---|---|---|---|---|
| NO. | BY: | DATE: | NO. | BY: | DATE: | S-22 |
| 1 | | | 3 | | | TOTAL SHEETS |
| 2 | | | 4 | | | 35 |

| | | | |
|---|---|---|---|
| DRAWN BY: | H.ASSFOURA | DATE : | 10/15 |
| CHECKED BY: | D. RUGGLES | DATE : | 10/15 |
| DESIGN ENGINEER OF RECORD: | J. LOFTUS | DATE : | 03/16 |

BRIDGE NO: 720026

8/26/2016
...\400_022_17BP5R50_SMU_BOM01.dgn
USER:jloftus

DocuSign Envelope ID: D287D744-7745-45ED-A608-C74816553493

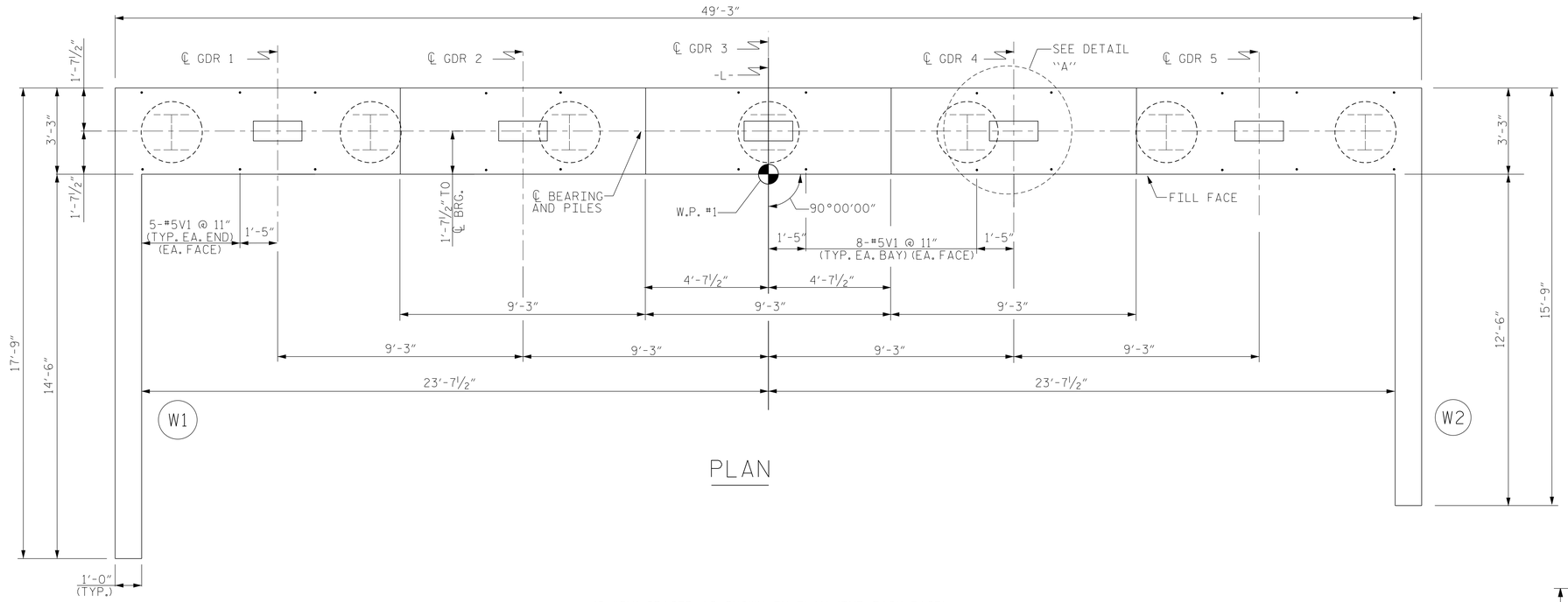


PLAN

## NOTES

FOR PILE SPLICE DETAILS, SEE SHEET 4 OF 4.

THE UPPER PORTION OF THE WINGS SHALL BE POURED WITH THE SUPERSTRUCTURE. CONCRETE AND REINFORCING STEEL QUANTITIES ARE INCLUDED IN THE SUPERSTRUCTURE BILL OF MATERIAL. FOR DETAILS, SEE SUPERSTRUCTURE PLANS.

INSTALL THE 4"DIA. DRAIN PIPE THROUGH THE WING WALL AS REQUIRED. FOR REINFORCED BRIDGE APPROACH FILLS, SEE THE ROADWAY PLANS. REINFORCING STEEL IN THE WING WALL MAY BE SHIFTED AS NECESSARY TO CLEAR THE DRAIN PIPE.

THE TOP SURFACE OF THE END BENT CAP AND WINGS, EXCEPT THE BEARING AREA, SHALL BE RAKED TO A DEPTH OF ¼".

FOR CONCRETE COLLAR DETAIL, SEE SHEET 3 OF 4.

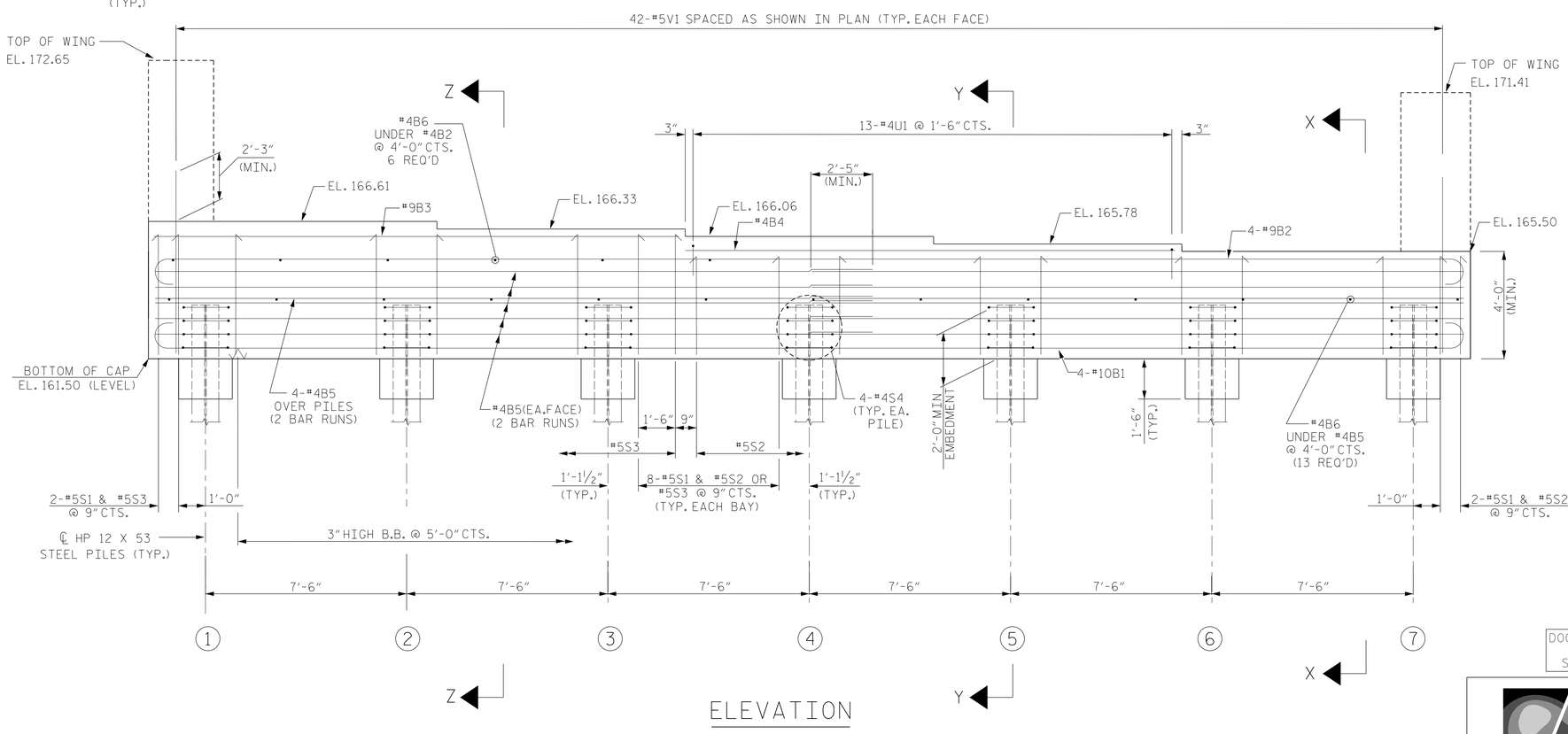


ELEVATION

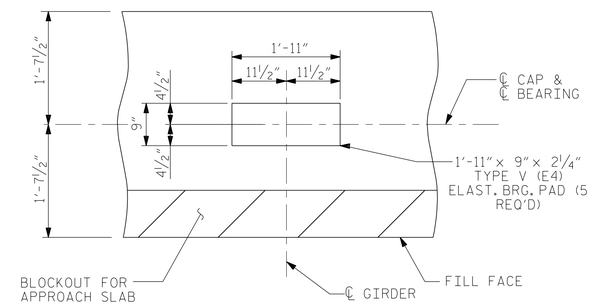


DETAIL "A"

(DIMENSIONS ARE TYPICAL EACH GIRDER)
(HP 12X53 PILES NOT SHOWN FOR CLARITY)

PROJECT NO. 17BP.5.R.50

FRANKLIN COUNTY

STATION: 15+46.00 -L-

SHEET 1 OF 4

DocuSigned by: Jeff Loftus FE51DC02E6794A9... 8/26/2016

NORTH CAROLINA PROFESSIONAL SEAL 041425 ENGINEER JEFFREY M. LOFTUS

DOCUMENT NOT CONSIDERED FINAL UNLESS ALL SIGNATURES COMPLETED

STEWART

Firm License No. C-1051
421 Fayetteville St,
Suite 400
Raleigh, NC 27601
T 919.380.8750
www.stewartinc.com

STATE OF NORTH CAROLINA
DEPARTMENT OF TRANSPORTATION
RALEIGH

SUBSTRUCTURE

END BENT 1

| REVISIONS | | | | | | SHEET NO. |
|---|---|---|---|---|---|---|
| NO. | BY: | DATE: | NO. | BY: | DATE: | S-23 |
| 1 | | | 3 | | | TOTAL SHEETS |
| 2 | | | 4 | | | 35 |

| | | |
|---|---|---|
| DRAWN BY: | H.ASSFOURA | DATE : 04/15 |
| CHECKED BY: | J.LOFTUS | DATE : 09/15 |
| DESIGN ENGINEER OF RECORD: | J. LOFTUS | DATE : 03/16 |

BRIDGE NO: 720026
8/26/2016
...\400_023_17BP5R50_SMU_EB01.dgn
USER:jloftus

DocuSign Envelope ID: D287D744-7745-45ED-A608-C74816553493

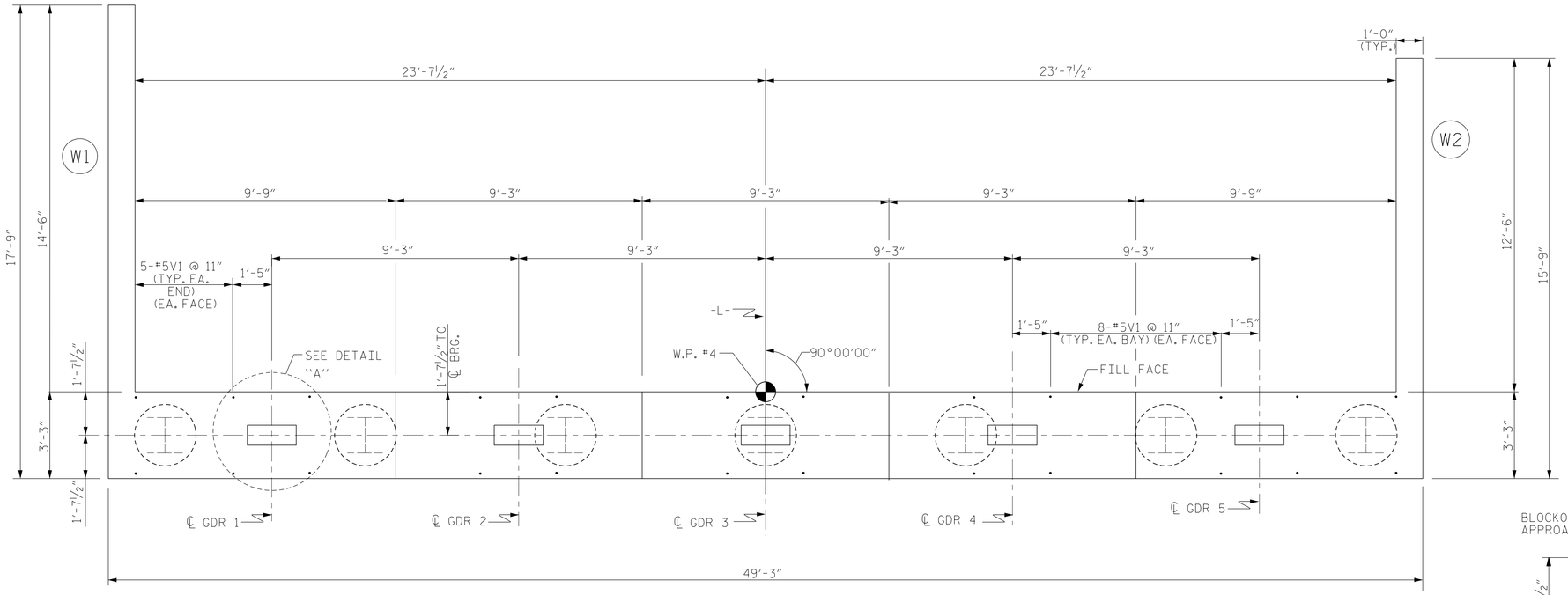


PLAN

## NOTES

FOR PILE SPLICE DETAILS, SEE SHEET 4 OF 4.

THE UPPER PORTION OF THE WINGS SHALL BE POURED WITH THE SUPERSTRUCTURE. CONCRETE AND REINFORCING STEEL QUANTITIES ARE INCLUDED IN THE SUPERSTRUCTURE BILL OF MATERIAL. FOR DETAILS, SEE SUPERSTRUCTURE PLANS.

INSTALL THE 4"DIA. DRAIN PIPE THROUGH THE WING WALL AS REQUIRED. FOR REINFORCED BRIDGE APPROACH FILLS, SEE THE ROADWAY PLANS. REINFORCING STEEL IN THE WING WALL MAY BE SHIFTED AS NECESSARY TO CLEAR THE DRAIN PIPE.

THE TOP SURFACE OF THE END BENT CAP AND WINGS, EXCEPT THE BEARING AREA, SHALL BE RAKED TO A DEPTH OF ¼".

FOR CONCRETE COLLAR DETAIL, SEE SHEET 3 OF 4.

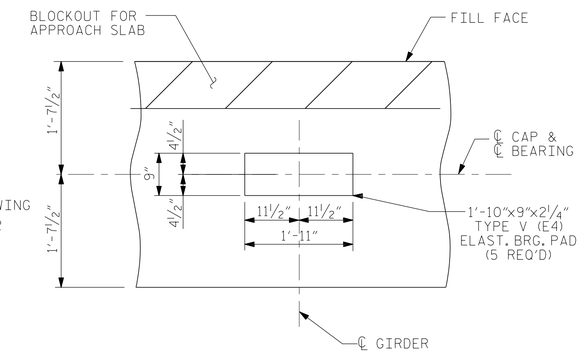


DETAIL "A"

(DIMENSIONS ARE TYPICAL EACH GIRDER)
(HP 12X53 PILES NOT SHOWN FOR CLARITY)

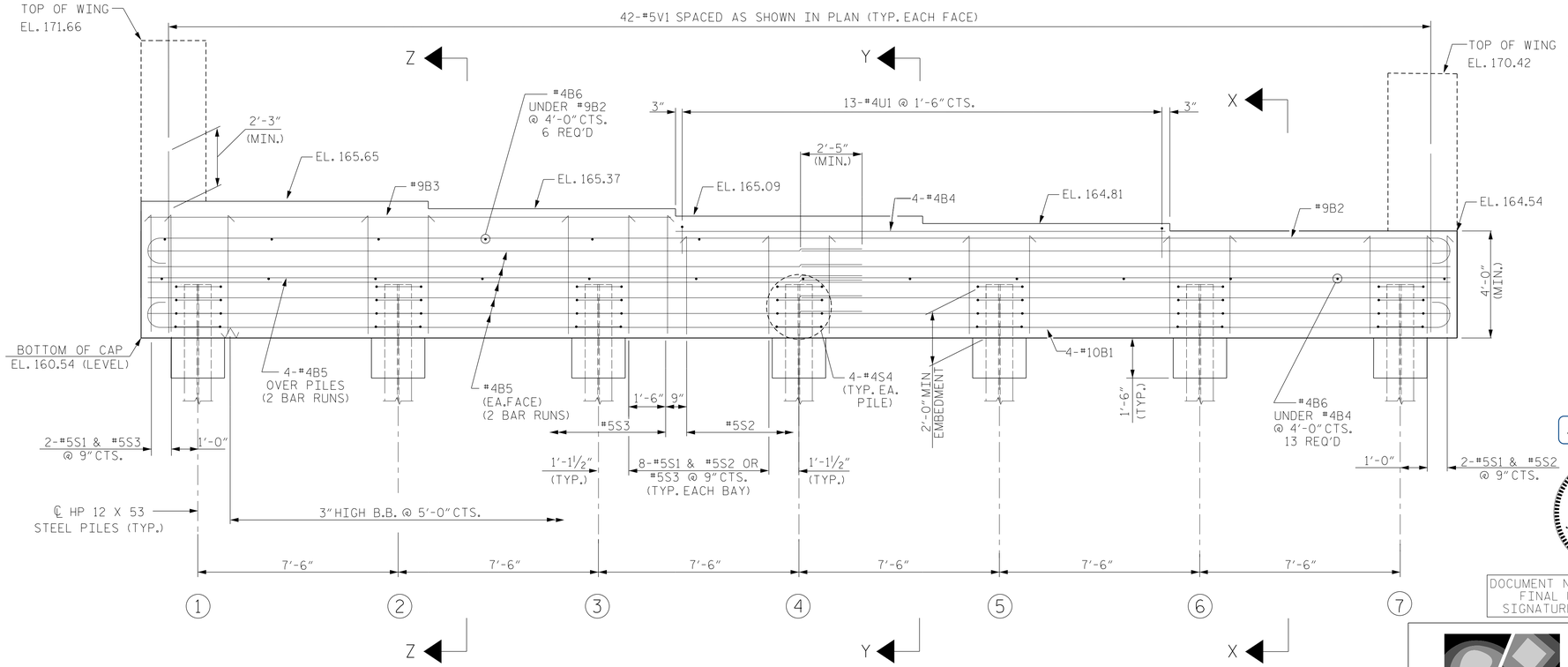


DocuSigned by: Jeff Loftus FE51DC02E6794A9... 8/26/2016

NORTH CAROLINA PROFESSIONAL SEAL 041425 ENGINEER JEFFREY M. LOFTUS

DOCUMENT NOT CONSIDERED FINAL UNLESS ALL SIGNATURES COMPLETED

PROJECT NO. 17BP.5.R.50

FRANKLIN COUNTY

STATION: 15+46.00 -L-

SHEET 2 OF 4

STATE OF NORTH CAROLINA
DEPARTMENT OF TRANSPORTATION
RALEIGH

SUBSTRUCTURE

END BENT 2

STEWART

Firm License No. C-1051
421 Fayetteville St,
Suite 400
Raleigh, NC 27601
T 919.380.8750
www.stewartinc.com

| REVISIONS | | | | | | SHEET NO. |
|---|---|---|---|---|---|---|
| NO. | BY: | DATE: | NO. | BY: | DATE: | S-24 |
| 1 | | | 3 | | | TOTAL SHEETS |
| 2 | | | 4 | | | 35 |

| | | | |
|---|---|---|---|
| DRAWN BY: | H.ASSFOURA | DATE : | 04/15 |
| CHECKED BY: | J. LOFTUS | DATE : | 09/15 |
| DESIGN ENGINEER OF RECORD: | J. LOFTUS | DATE : | 03/16 |

BRIDGE NO: 720026

8/26/2016
...\400_024_17BP5R50_SMU_EB02.dgn
USER:jloftus

DocuSign Envelope ID: D287D744-7745-45ED-A608-C74816553493

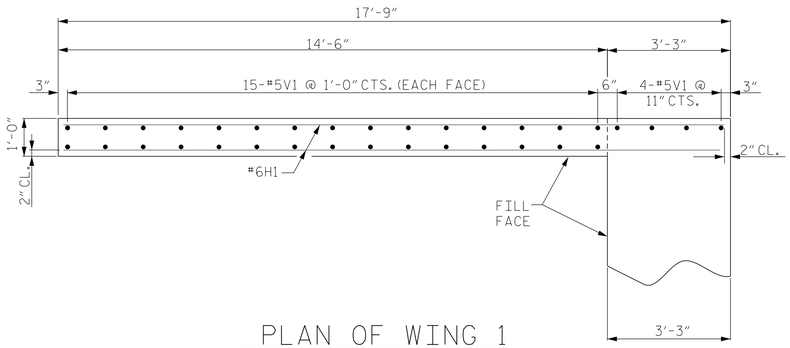


## PLAN OF WING 1

(END BENT NO. 1 SHOWN, END BENT NO. 2 SIMILAR BY ROTATION)

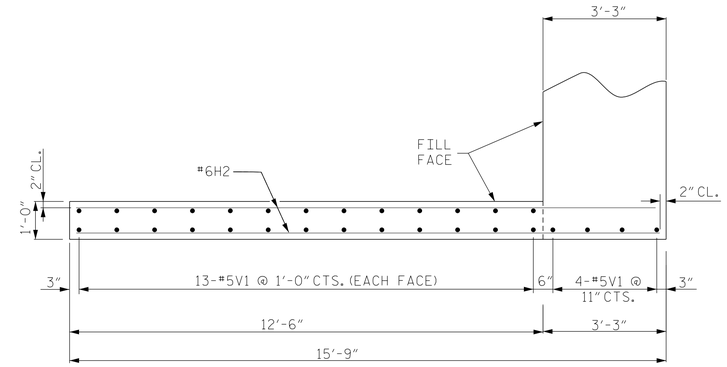


## PLAN OF WING 2

(END BENT NO. 1 SHOWN, END BENT NO. 2 SIMILAR BY ROTATION)

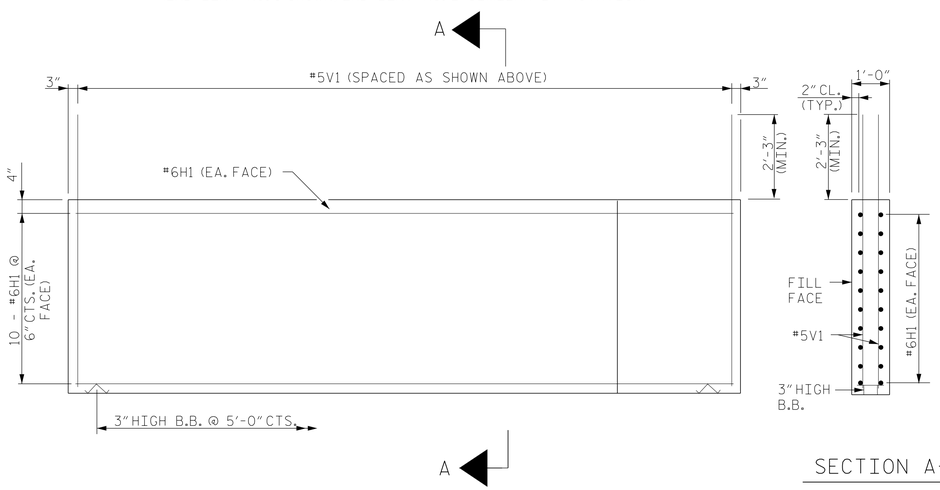


## ELEVATION OF WING 1

FOR REINFORCING STEEL IN UPPER PORTION OF WING, SEE SUPERSTRUCTURE SHEETS

## SECTION A-A

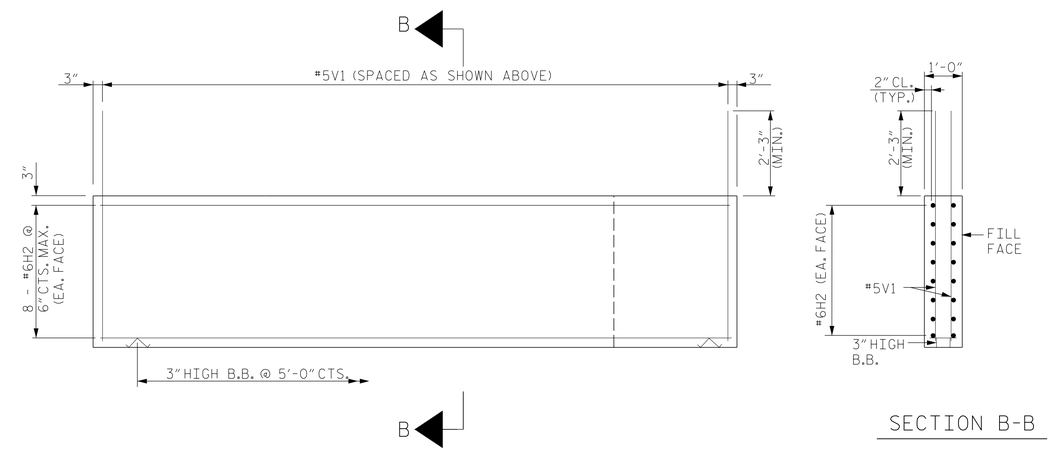


## ELEVATION OF WING 2

FOR REINFORCING STEEL IN UPPER PORTION OF WING, SEE SUPERSTRUCTURE SHEETS

## SECTION B-B

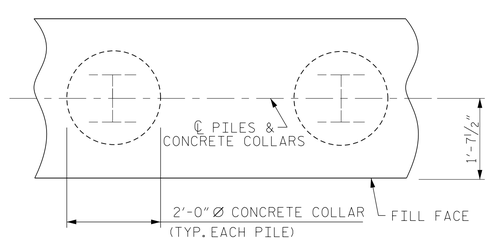


PLAN

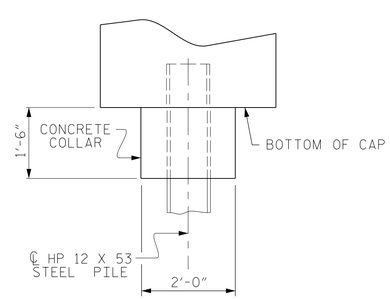


ELEVATION

## CORROSION PROTECTION FOR STEEL PILES DETAIL

(END BENT NO. 1 SHOWN, END BENT NO. 2 SIMILAR BY ROTATION)

DocuSigned by: Jeff Loftus FE51DC02E6794A8 8/26/2016

NORTH CAROLINA PROFESSIONAL SEAL 041425 ENGINEER JEFFREY M. LOFTUS

DOCUMENT NOT CONSIDERED FINAL UNLESS ALL SIGNATURES COMPLETED

STEWART

Firm License No. C-1051
421 Fayetteville St,
Suite 400
Raleigh, NC 27601
T 919.380.8750
www.stewartinc.com

PROJECT NO. 17BP.5.R.50

FRANKLIN COUNTY

STATION: 15+46.00 -L-

SHEET 3 OF 4

STATE OF NORTH CAROLINA
DEPARTMENT OF TRANSPORTATION
RALEIGH

SUBSTRUCTURE

END BENT
WING DETAILS

| REVISIONS | | | | | | SHEET NO. |
|---|---|---|---|---|---|---|
| NO. | BY: | DATE: | NO. | BY: | DATE: | S-25 |
| 1 | | | 3 | | | TOTAL SHEETS |
| 2 | | | 4 | | | 35 |

| | | | |
|---|---|---|---|
| DRAWN BY: | H.ASSFOURA | DATE : | 02/15 |
| CHECKED BY: | J. LOFTUS | DATE : | 09/15 |
| DESIGN ENGINEER OF RECORD: | J. LOFTUS | DATE : | 03/16 |

BRIDGE NO: 720026

8/26/2016
...\400_025_17BP5R50_SMU_EB03.dgn
USER:jloftus

DocuSign Envelope ID: D287D744-7745-45ED-A608-C74816553493

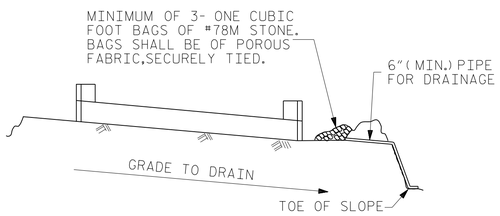


BAGGED STONE AND PIPE SHALL BE PLACED IMMEDIATELY AFTER COMPLETION OF END BENT EXCAVATION. PIPE MAY BE EITHER CONCRETE, CORRUGATED STEEL, CORRUGATED ALUMINUM ALLOY, OR CORRUGATED PLASTIC. PERFORATED PIPE WILL NOT BE ALLOWED.

BAGGED STONE SHALL REMAIN IN PLACE UNTIL THE ENGINEER DIRECTS THAT IT BE REMOVED. THE CONTRACTOR SHALL REMOVE AND DISPOSE OF SILT ACCUMULATIONS AT BAGGED STONE WHEN SO DIRECTED BY THE ENGINEER. BAGS SHALL BE REMOVED AND REPLACED WHENEVER THE ENGINEER DETERMINES THAT THEY HAVE DETERIORATED AND LOST THEIR EFFECTIVENESS.

NO SEPARATE PAYMENT WILL BE MADE FOR THIS WORK AND THE ENTIRE COST OF THIS WORK SHALL BE INCLUDED IN THE UNIT CONTRACT PRICE BID FOR THE SEVERAL PAY ITEMS.

## TEMPORARY DRAINAGE AT END BENT

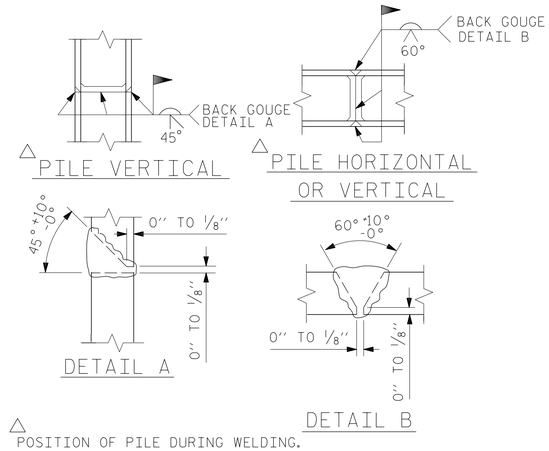


## PILE SPLICE DETAILS

### BAR TYPES

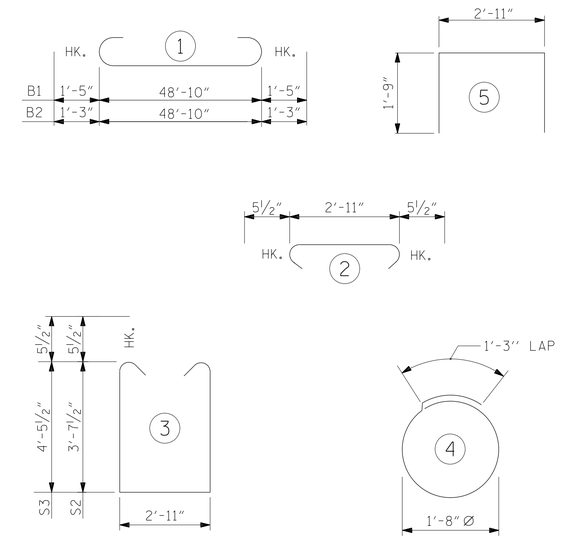


ALL BAR DIMENSIONS ARE OUT TO OUT.

| END BENT No. 1 HP 12 X 53 STEEL PILES | | END BENT No. 2 HP 12 X 53 STEEL PILES | |
|---|---|---|---|
| NO: 7 | LIN. FT.= 210 | NO: 7 | LIN. FT.= 85 |

### BILL OF MATERIAL FOR ONE END BENT (2 REQ'D)

| BAR | NO. | SIZE | TYPE | LENGTH | WEIGHT |
|---|---|---|---|---|---|
| B1 | 4 | #10 | 1 | 51'-8" | 889 |
| B2 | 4 | #9 | 1 | 51'-4" | 698 |
| B3 | 4 | #9 | STR | 19'-8" | 267 |
| B4 | 4 | #4 | STR | 18'-4" | 49 |
| B5 | 28 | #4 | STR | 25'-8" | 480 |
| B6 | 19 | #4 | STR | 2'-11" | 37 |
| | | | | | |
| H1 | 20 | #6 | STR | 17'-5" | 523 |
| H2 | 16 | #6 | STR | 15'-5" | 371 |
| | | | | | |
| S1 | 52 | #5 | 2 | 3'-10" | 208 |
| S2 | 31 | #5 | 3 | 11'-1" | 358 |
| S3 | 21 | #5 | 3 | 12'-9" | 279 |
| S4 | 28 | #4 | 4 | 6'-6" | 122 |
| | | | | | |
| U1 | 13 | #4 | 5 | 6'-5" | 56 |
| | | | | | |
| V1 | 148 | #5 | STR | 7'-2" | 1106 |

REINFORCING STEEL (FOR ONE END BENT) 5443 LBS.

CLASS A CONCRETE (FOR ONE END BENT)

CAP, LOWER PART OF WING & COLLAR 32.8 C.Y.

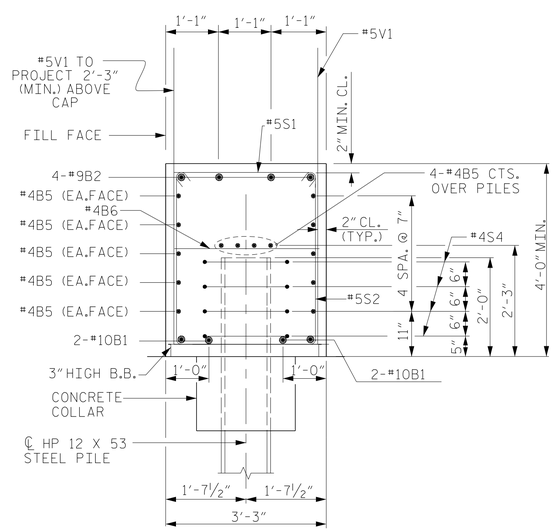


## SECTION X-X

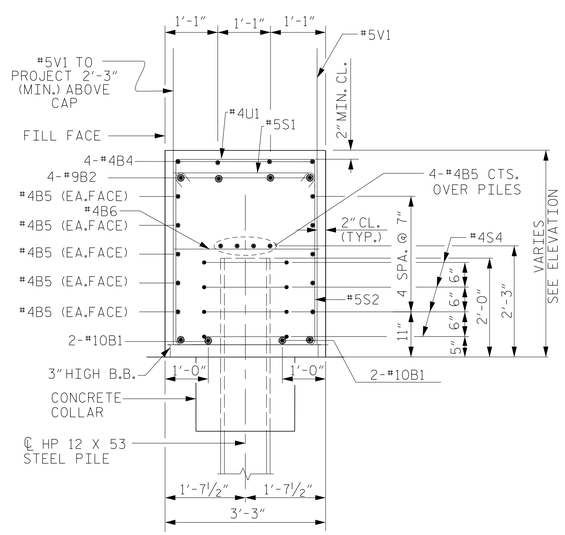


## SECTION Y-Y

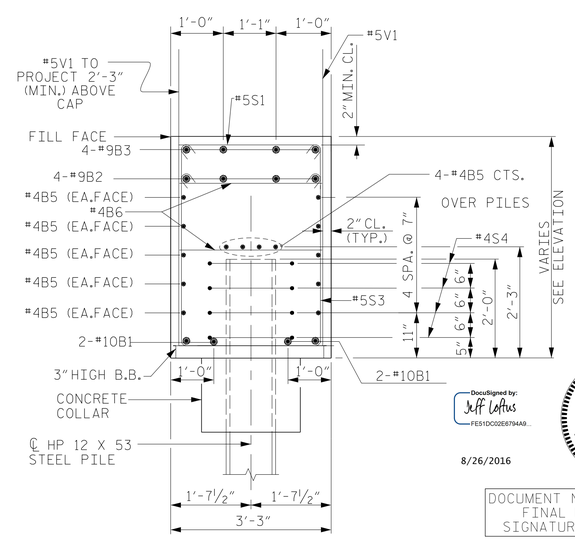


## SECTION Z-Z

DocuSigned by: Jeff Loftus FE51DC02E6794A9...
8/26/2016

NORTH CAROLINA PROFESSIONAL SEAL 041425 ENGINEER JEFFREY M. LOFTUS

DOCUMENT NOT CONSIDERED FINAL UNLESS ALL SIGNATURES COMPLETED

PROJECT NO. 17BP.5.R.50
FRANKLIN COUNTY
STATION: 15+46.00 -L-

SHEET 4 OF 4

STATE OF NORTH CAROLINA
DEPARTMENT OF TRANSPORTATION
RALEIGH

SUBSTRUCTURE

END BENT DETAILS

STEWART
Firm License No. C-1051
421 Fayetteville St,
Suite 400
Raleigh, NC 27601
T 919.380.8750
www.stewartinc.com

| REVISIONS | | | | | | SHEET NO. |
|---|---|---|---|---|---|---|
| NO. | BY: | DATE: | NO. | BY: | DATE: | S-26 |
| 1 | | | 3 | | | TOTAL SHEETS |
| 2 | | | 4 | | | 35 |

| | | | |
|---|---|---|---|
| DRAWN BY: | H.ASSFOURA | DATE : | 02/15 |
| CHECKED BY: | J. LOFTUS | DATE : | 10/15 |
| DESIGN ENGINEER OF RECORD: | J. LOFTUS | DATE : | 03/16 |

BRIDGE NO: 720026
...\400_026_17BP5R50_SMU_EB04.dgn
USER:jloftus
8/26/2016 8:56 BRIDGE 060053

DocuSign Envelope ID: D287D744-7745-45ED-A608-C74816553493

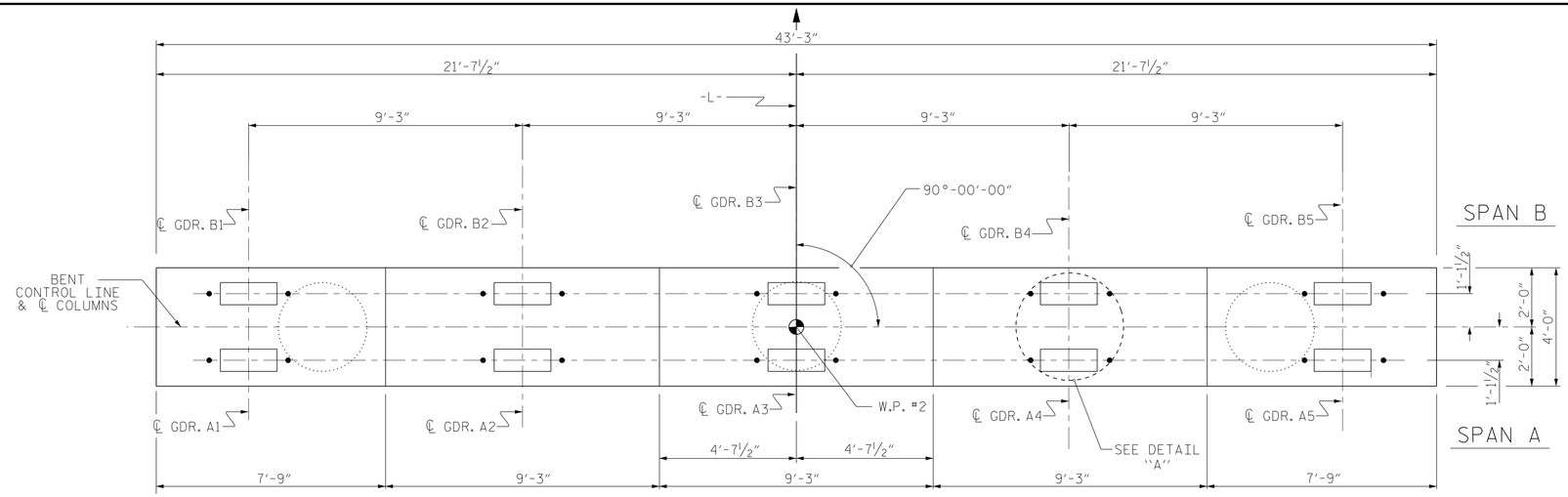


PLAN

## NOTES

STIRRUPS TO BE PLACED VERTICALLY AND INVERTED ALTERNATELY.

STIRRUPS IN CAP MAY BE SHIFTED AS NECESSARY TO CLEAR ANCHOR BOLTS.

HOOKS ON "M" BARS MAY BE TURNED AS NECESSARY FOR PLACING REINFORCING STEEL.

FOR END ELEVATION DETAIL, SEE SHEET 2 OF 3.

THE CONTRACTOR ATTENTION IS CALLED TO THE FACT THAT THE LONGITUDINAL REINFORCEMENT FOR THE DRILLED PIERS IS DETAILED WITH 3 FEET OF EXTRA LENGTH.

ALL STEEL IN THE DRILLED PIERS IS INCLUDED IN THE PAY ITEMS FOR "REINFORCING STEEL" AND "SPIRAL COLUMN REINFORCING STEEL"

SPLICING OF THE LONGITUDINAL BARS IN THE DRILLED PIER WILL NOT BE PERMITTED.

THE LOCATION OF THE CONSTRUCTION JOINT IN THE DRILLED PIERS IS BASED ON AN APPROXIMATE GROUND LINE ELEVATION. IF THE CONSTRUCTION JOINT ABOVE THE ACTUAL GROUND ELEVATION, THE CONTRACTOR SHALL PLACE THE CONSTRUCTION JOINT 1 FOOT BELOW THE GROUND LINE.

NO SEPERATE PAVEMENT SHALL BE MADE FOR ANY ADITIONAL STEEL REQUIRED IN CONSTRUCTION OF THE DRILLED PIER AS THIS IS CONSIDERED INCIDENTAL TO THE LINEAR FOOT PRICE FOR DRILLED PIER.

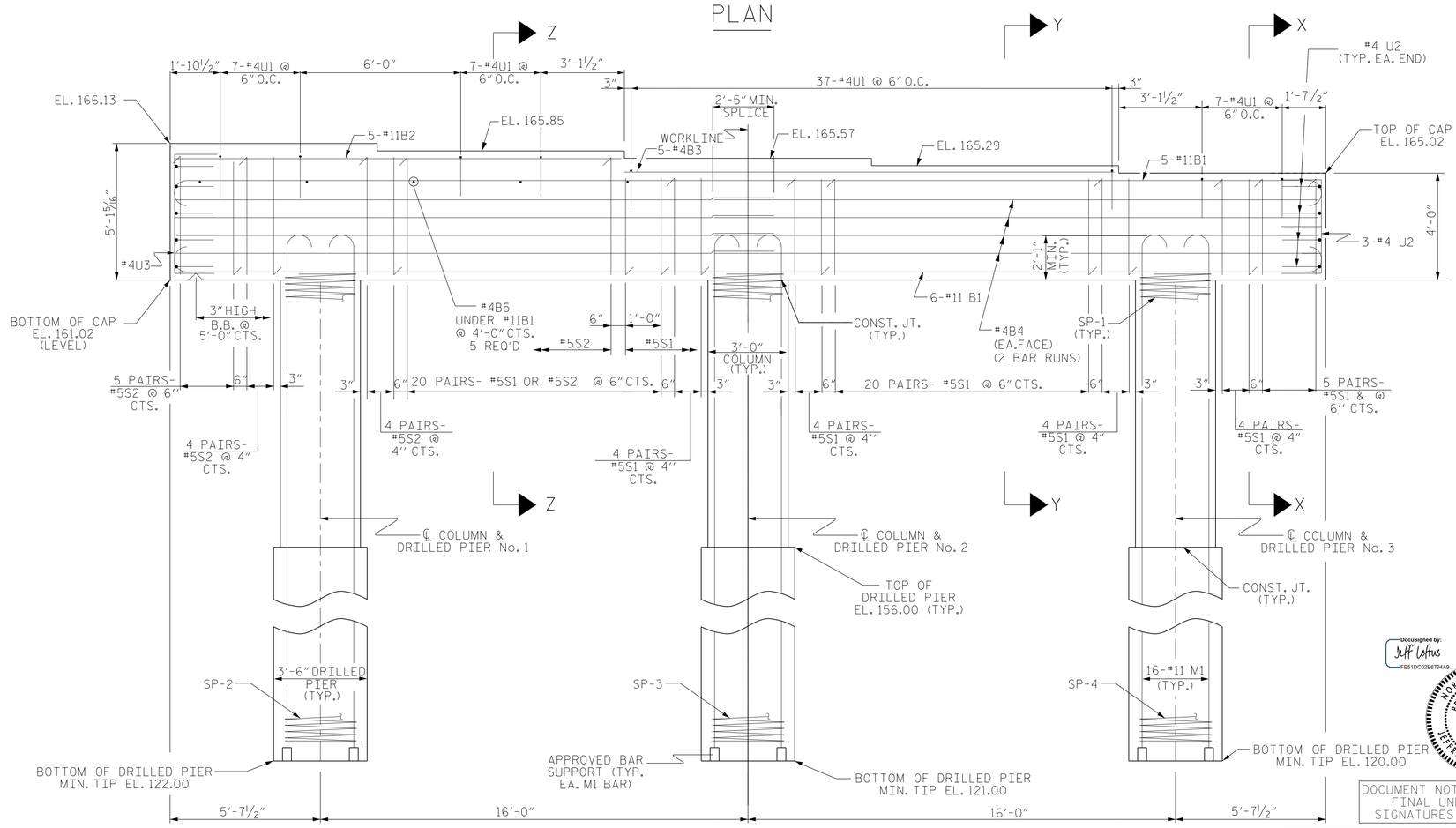


ELEVATION

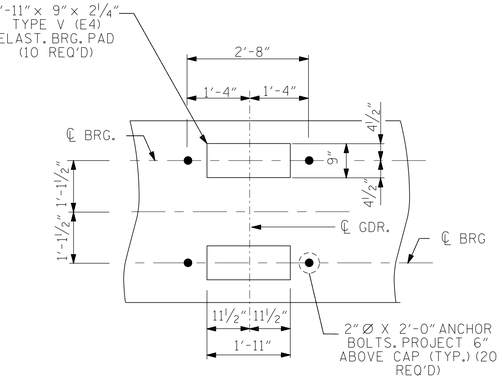


DETAIL "A"

(DIMENSIONS ARE TYPICAL EACH GIRDER)
(COLUMNS NOT SHOWN FOR CLARITY)

DocuSigned by: Jeff Loftus FE51DC02E6794A9... 8/26/2016

NORTH CAROLINA PROFESSIONAL SEAL 041425 ENGINEER JEFFREY M. LOFTUS

DOCUMENT NOT CONSIDERED FINAL UNLESS ALL SIGNATURES COMPLETED

PROJECT NO. 17BP.5.R.50

FRANKLIN COUNTY

STATION: 15+46.00 -L-

SHEET 1 OF 3

STATE OF NORTH CAROLINA
DEPARTMENT OF TRANSPORTATION
RALEIGH

SUBSTRUCTURE

BENT NO. 1

STEWART
Firm License No. C-1051
421 Fayetteville St,
Suite 400
Raleigh, NC 27601
T 919.380.8750
www.stewartinc.com

| REVISIONS | | | | | | SHEET NO. |
|---|---|---|---|---|---|---|
| NO. | BY: | DATE: | NO. | BY: | DATE: | S-27 |
| 1 | | | 3 | | | TOTAL SHEETS |
| 2 | | | 4 | | | 35 |

| | | | |
|---|---|---|---|
| DRAWN BY: | H.ASSFOURA | DATE : | 07/15 |
| CHECKED BY: | J. LOFTUS | DATE : | 09/15 |
| DESIGN ENGINEER OF RECORD: | J. LOFTUS | DATE : | 03/16 |

BRIDGE NO: 720026

8/26/2016
...\400_027_17BP5R50_SMU_1B01.dgn
USER:jloftus

DocuSign Envelope ID: D287D744-7745-45ED-A608-C74816553493

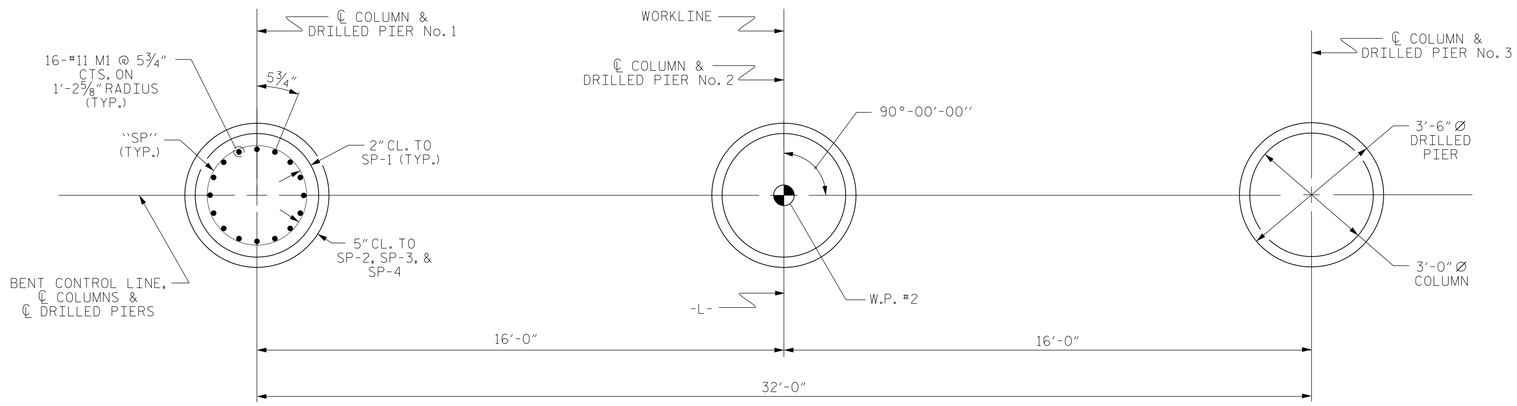


## PLAN OF DRILLED PIERS & COLUMNS

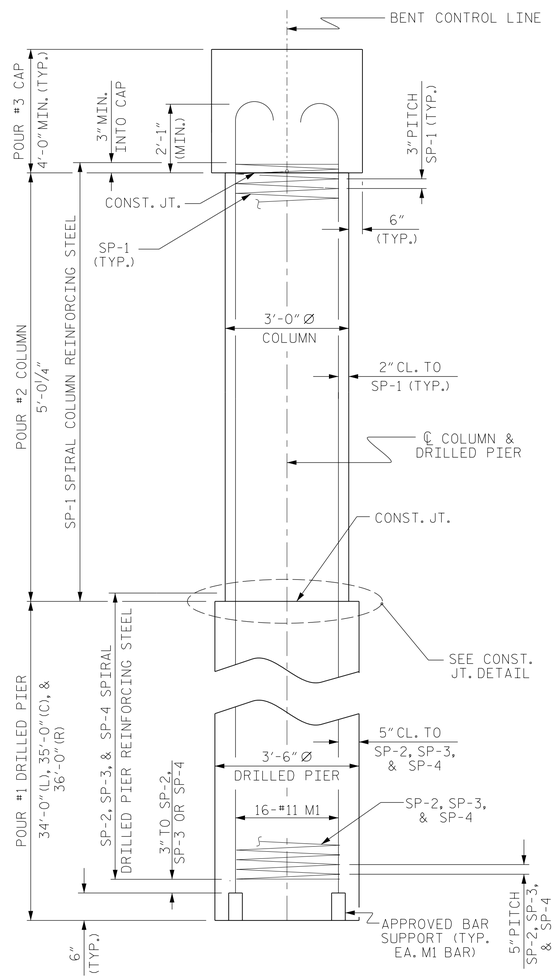


## END ELEVATION

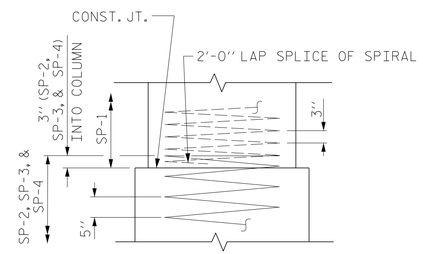


## CONSTRUCTION JOINT DETAIL

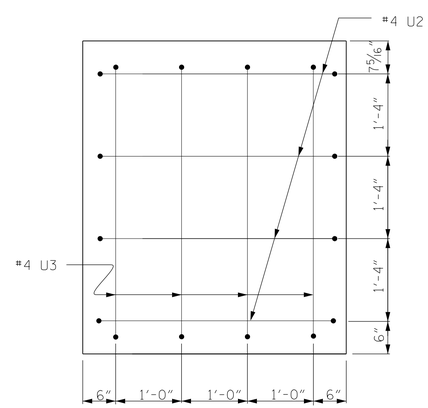


## LEFT END OF CAP VIEW

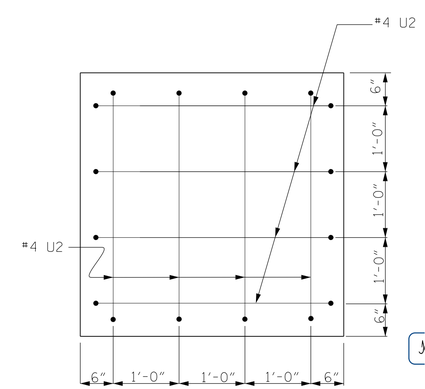


## RIGHT END OF CAP VIEW

DocuSigned by: Jeff Loftus FE51DC02E6794A9... 8/26/2016

NORTH CAROLINA PROFESSIONAL SEAL 041425 ENGINEER JEFFREY M. LOFTUS

DOCUMENT NOT CONSIDERED FINAL UNLESS ALL SIGNATURES COMPLETED

STEWART
Firm License No. C-1051
421 Fayetteville St,
Suite 400
Raleigh, NC 27601
T 919.380.8750
www.stewartinc.com

PROJECT NO. 17BP.5.R.50

FRANKLIN COUNTY

STATION: 15+46.00 -L-

SHEET 2 OF 3

STATE OF NORTH CAROLINA
DEPARTMENT OF TRANSPORTATION
RALEIGH

SUBSTRUCTURE
BENT NO. 1

| REVISIONS | | | | | | SHEET NO. |
|---|---|---|---|---|---|---|
| NO. | BY: | DATE: | NO. | BY: | DATE: | S-28 |
| 1 | | | 3 | | | TOTAL SHEETS |
| 2 | | | 4 | | | 35 |

| | | |
|---|---|---|
| DRAWN BY: H.ASSFOURA | DATE : 08/15 | |
| CHECKED BY: J. LOFTUS | DATE : 09/15 | |
| DESIGN ENGINEER OF RECORD: J. LOFTUS | DATE : 03/16 | |

BRIDGE NO: T20026
8/26/2016
...\400_028_17BP5R50_SMU_1B02.dgn
USER:jloftus

DocuSign Envelope ID: D287D744-7745-45ED-A608-C74816553493

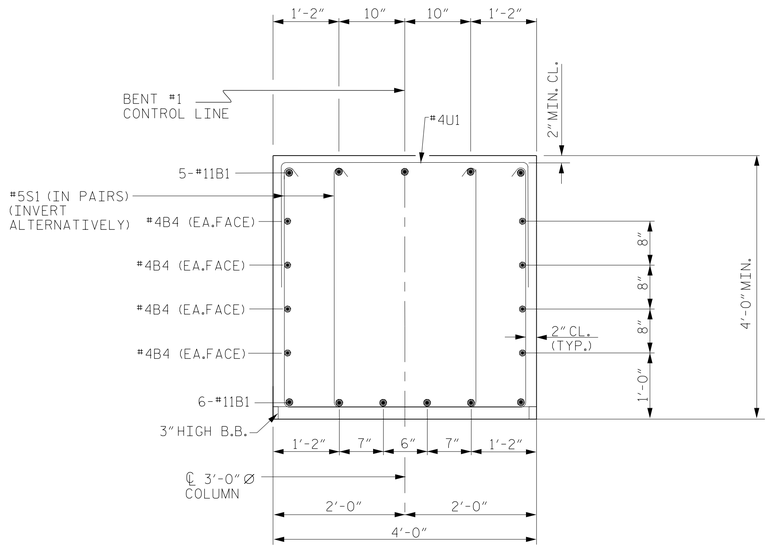


SECTION X-X

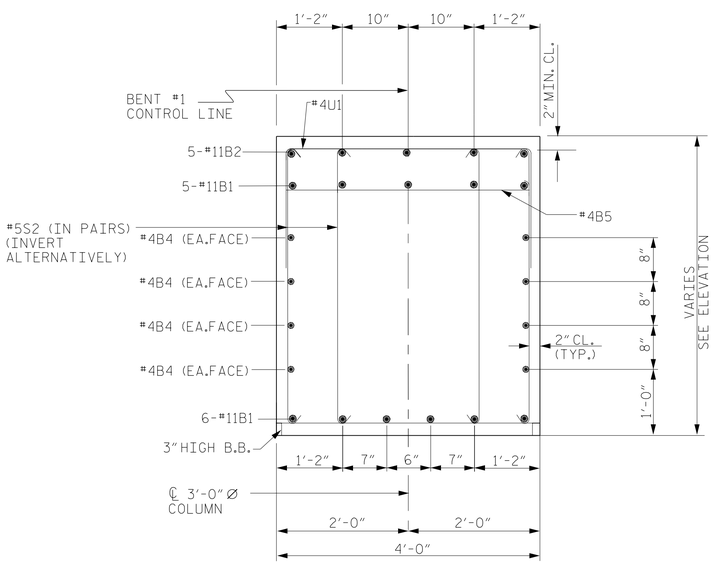


SECTION Z-Z

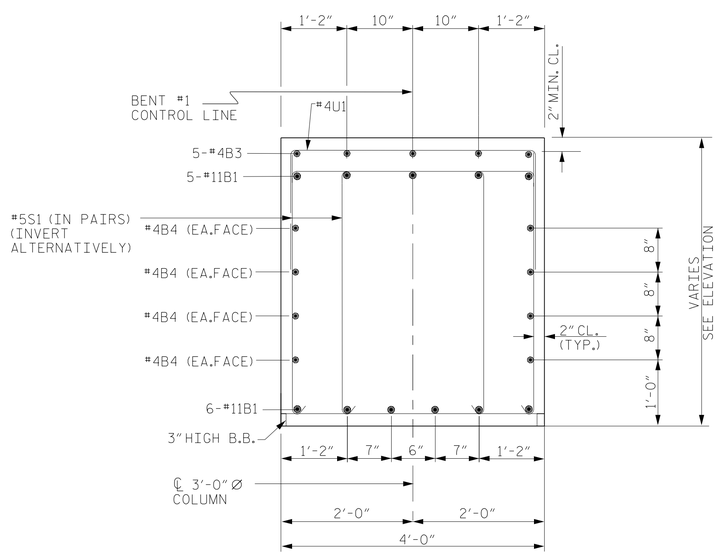


SECTION Y-Y

## BAR TYPES

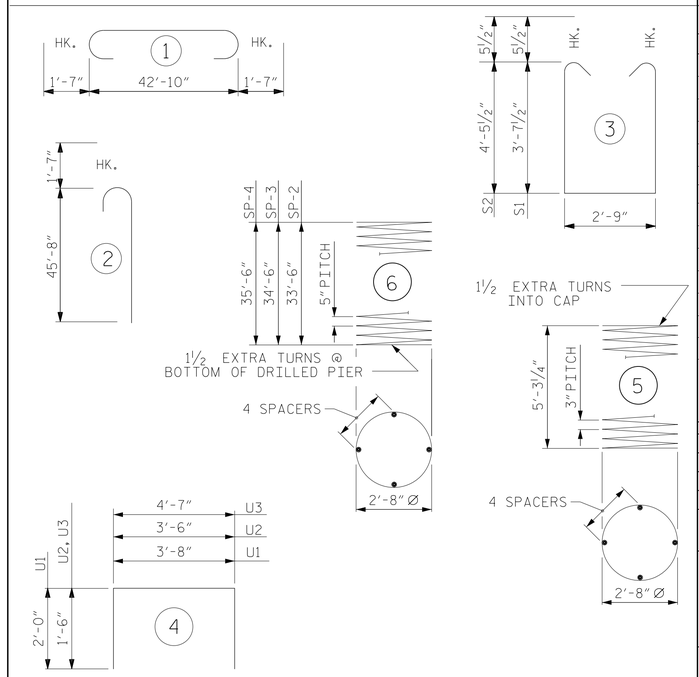


ALL BAR DIMENSIONS ARE OUT TO OUT.

## BILL OF MATERIAL
### FOR BENT NO. 1

| BAR | NO. | SIZE | TYPE | LENGTH | WEIGHT |
|---|---|---|---|---|---|
| B1 | 11 | #11 | 1 | 46'-0" | 2688 |
| B2 | 5 | #11 | STR | 16'-7" | 441 |
| B3 | 5 | #4 | STR | 18'-4" | 61 |
| B4 | 16 | #4 | STR | 22'-9" | 243 |
| B5 | 5 | #4 | STR | 3'-8" | 12 |
| | | | | | |
| S1 | 88 | #5 | 3 | 10'-11" | 1002 |
| S2 | 60 | #5 | 3 | 12'-7" | 787 |
| | | | | | |
| M1 | 48 | #11 | 2 | 47'-3" | 12050 |
| | | | | | |
| U1 | 58 | #4 | 4 | 7'-8" | 297 |
| U2 | 12 | #4 | 4 | 6'-6" | 52 |
| U3 | 4 | #4 | 4 | 7'-7" | 20 |

REINFORCING STEEL
(BENT NO. 1) 17653 LBS.

| | | | | | |
|---|---|---|---|---|---|
| SP-1 | 3 | ✱✱ | 5 | 186'-4" | 373 |
| SP-2 | 1 | ✱ | 6 | 678'-6" | 708 |
| SP-3 | 1 | ✱ | 6 | 699'-2" | 729 |
| SP-4 | 1 | ✱ | 6 | 717'-9" | 749 |

SPIRAL COLUMN REINFORCING STEEL
(BENT NO. 1) 2559 LBS.

✱ THE SP-2, SP-3, SP-4 SPIRAL REINFORCING STEEL SHALL BE W31 OR D-31 COLD DRAWN WIRE OR #5 PLAIN OR DEFORMED BAR

✱✱ THE SP-1 SPIRAL REINFORCING STEEL SHALL BE W20 OR D-20 COLD DRAWN WIRE OR #4 PLAIN OR DEFORMED BAR

CLASS A CONCRETE BREAKDOWN
(FOR ONE BENT)

| | |
|---|---|
| POUR #2 (COLUMNS) | 3.9 C.Y. |
| POUR #3 (CAP) | 29.2 C.Y. |
| TOTAL CLASS A CONCRETE | 33.1 C.Y. |

DRILLED PIERS:
(FOR BENT NO. 1)

| | |
|---|---|
| DRILLED PIER CONCRETE POUR #1 (DRILLED PIERS) | 37.4 C.Y. |
| 3'-6" Ø DRILLED PIER NOT IN SOIL | 24 LIN. FT. |
| 3'-6" Ø DRILLED PIER IN SOIL | 81 LIN. FT. |
| PERMANENT STEEL CASING FOR 3'-6" Ø DRILLED PIER | 81 LIN. FT. |
| CSL TUBES | 438 LIN. FT. |

PROJECT NO. 17BP.5.R.50

FRANKLIN COUNTY

STATION: 15+46.00 -L-

SHEET 3 OF 3

DocuSigned by: Jeff Loftus FE51D002E6794A9 8/26/2016

NORTH CAROLINA PROFESSIONAL SEAL 041425 ENGINEER JEFFREY M. LOFTUS

DOCUMENT NOT CONSIDERED FINAL UNLESS ALL SIGNATURES COMPLETED

Firm License No. C-1051
421 Fayetteville St,
Suite 400
Raleigh, NC 27601
T 919.380.8750
www.stewartinc.com
STEWART

STATE OF NORTH CAROLINA
DEPARTMENT OF TRANSPORTATION
RALEIGH

SUBSTRUCTURE
BENT NO. 1

| REVISIONS | | | | | | | | SHEET NO. |
|---|---|---|---|---|---|---|---|---|
| NO. | BY: | DATE: | NO. | BY: | DATE: | | | S-29 |
| 1 | | | 3 | | | | | TOTAL SHEETS |
| 2 | | | 4 | | | | | 35 |

DRAWN BY: H.ASSFOURA DATE: 08/15
CHECKED BY: J. LOFTUS DATE: 09/15
DESIGN ENGINEER OF RECORD: J. LOFTUS DATE: 03/16

BRIDGE NO: 720026
8/26/2016
...\400_029_17BP5R50_SMU_1B03.dgn
USER:jloftus

DocuSign Envelope ID: D287D744-7745-45ED-A608-C74816553493

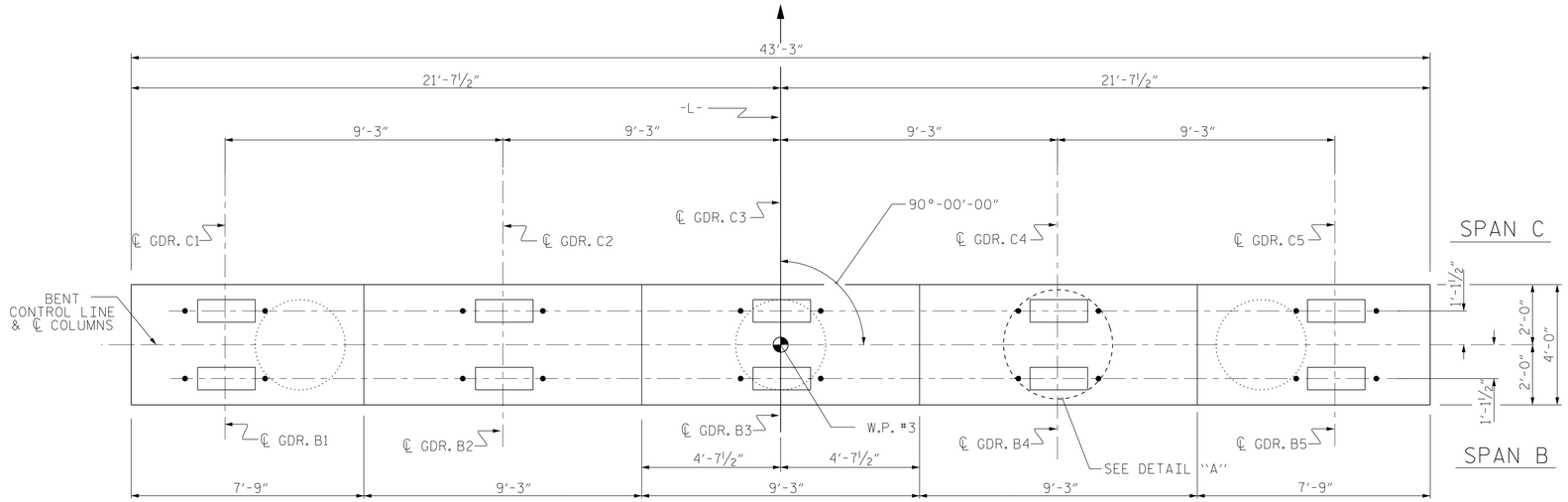


PLAN

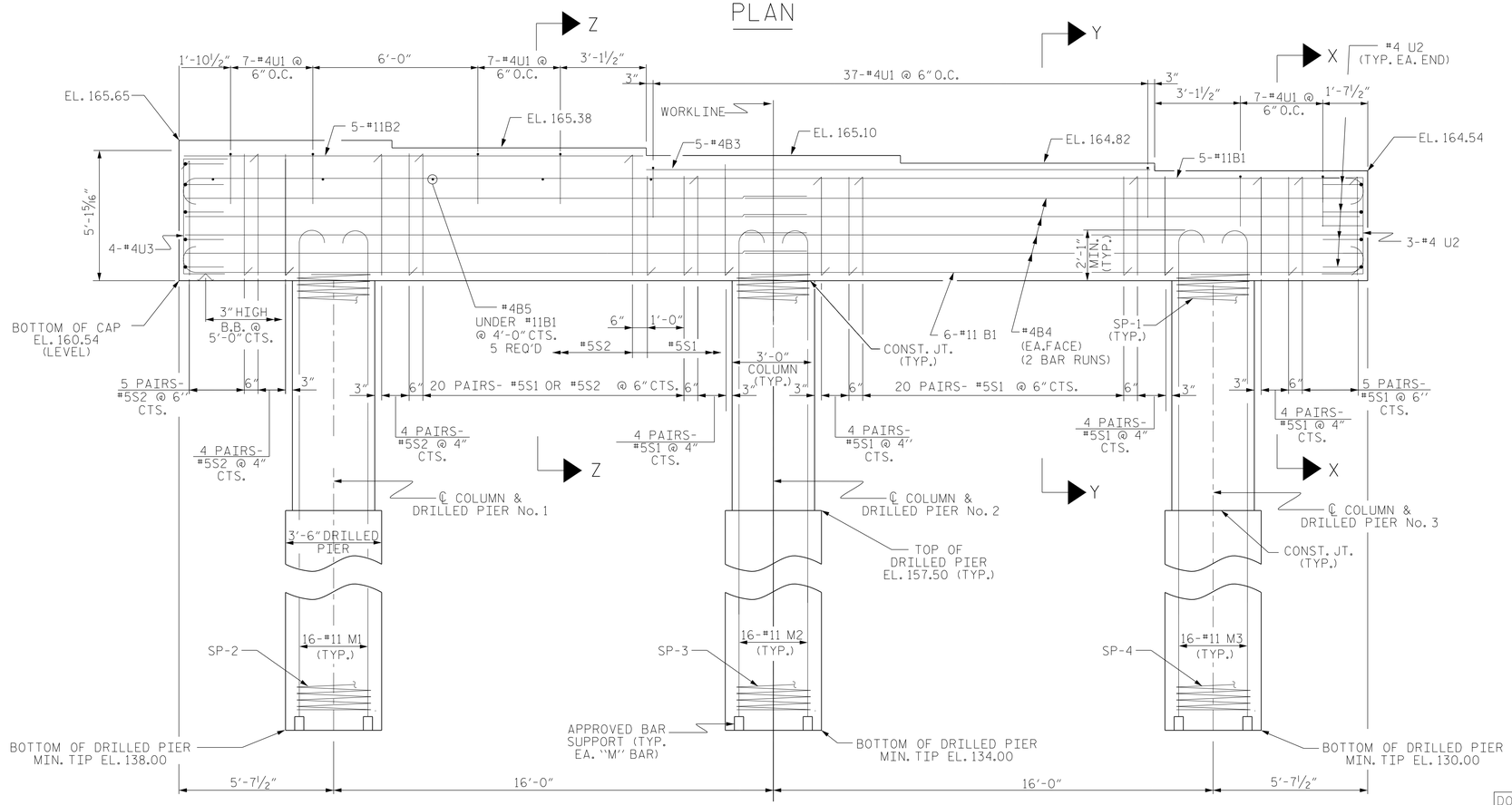


ELEVATION

## NOTES

STIRRUPS TO BE PLACED VERTICALLY AND INVERTED ALTERNATELY.

STIRRUPS IN CAP MAY BE SHIFTED AS NECESSARY TO CLEAR ANCHOR BOLTS.

HOOKS ON "M" BARS MAY BE TURNED AS NECESSARY FOR PLACING REINFORCING STEEL.

FOR END ELEVATION DETAIL, SEE SHEET 2 OF 3.

THE CONTRACTOR ATTENTION IS CALLED TO THE FACT THAT THE LONGITUDINAL REINFORCEMENT FOR THE DRILLED PIERS IS DETAILED WITH 3 FEET OF EXTRA LENGTH.

ALL STEEL IN THE DRILLED PIERS IS INCLUDED IN THE PAY ITEMS FOR "REINFORCING STEEL" AND "SPIRAL COLUMN REINFORCING STEEL"

SPLICING OF THE LONGITUDINAL BARS IN THE DRILLED PIER WILL NOT BE PERMITTED

THE LOCATION OF THE CONSTRUCTION JOINT IN THE DRILLED PIERS IS BASED ON AN APPROXIMATE GROUND LINE ELEVATION. IF THE CONSTRUCTION JOINT ABOVE THE ACTUAL GROUND ELEVATION, THE CONTRACTOR SHALL PLACE THE CONSTRUCTION JOINT 1 FOOT BELOW THE GROUND LINE.

NO SEPERATE PAVEMENT SHALL BE MADE FOR ANY ADITIONAL STEEL REQUIRED IN CONSTRUCTION OF THE DRILLED PIER AS THIS IS CONSIDERED INCIDENTAL TO THE LINEAR FOOT PRICE FOR DRILLED PIER.

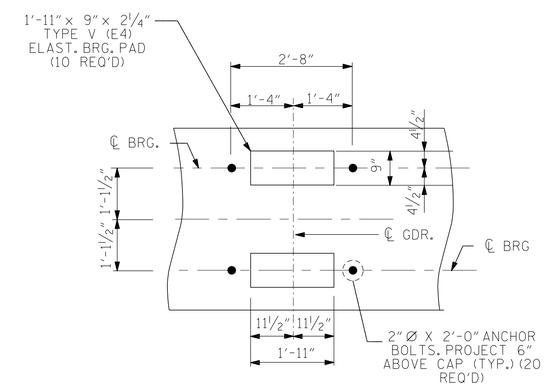


DETAIL "A"

(DIMENSIONS ARE TYPICAL EACH GIRDER)
(COLUMNS NOT SHOWN FOR CLARITY)

PROJECT NO. 17BP.5.R.50

FRANKLIN COUNTY

STATION: 15+46.00 -L-

SHEET 1 OF 3

DocuSigned by: Jeff Loftus FE51DC02E6794A9... 8/26/2016

NORTH CAROLINA PROFESSIONAL SEAL 041425 ENGINEER JEFFREY M. LOFTUS

DOCUMENT NOT CONSIDERED FINAL UNLESS ALL SIGNATURES COMPLETED

STEWART

Firm License No. C-1051
421 Fayetteville St,
Suite 400
Raleigh, NC 27601
T 919.380.8750
www.stewartinc.com

STATE OF NORTH CAROLINA
DEPARTMENT OF TRANSPORTATION
RALEIGH

SUBSTRUCTURE
BENT NO. 2

| REVISIONS | | | | | | SHEET NO. |
|---|---|---|---|---|---|---|
| NO. | BY: | DATE: | NO. | BY: | DATE: | S-30 |
| 1 | | | 3 | | | TOTAL SHEETS |
| 2 | | | 4 | | | 35 |

| | | |
|---|---|---|
| DRAWN BY: | H.ASSFOURA | DATE : 08/15 |
| CHECKED BY: | J. LOFTUS | DATE : 09/15 |
| DESIGN ENGINEER OF RECORD: | J. LOFTUS | DATE : 03/16 |

BRIDGE NO: 720026

8/26/2016
...\400.030.17BP5R50_SMU.2B01.dgn
USER:jloftus

DocuSign Envelope ID: D287D744-7745-45ED-A608-C74816553493

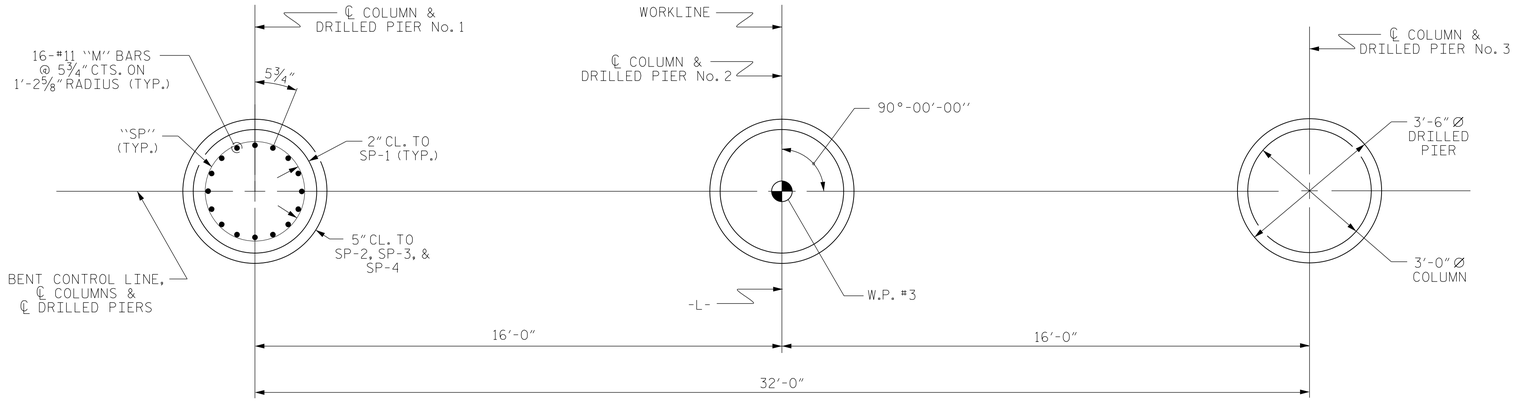


## PLAN OF DRILLED PIERS & COLUMNS

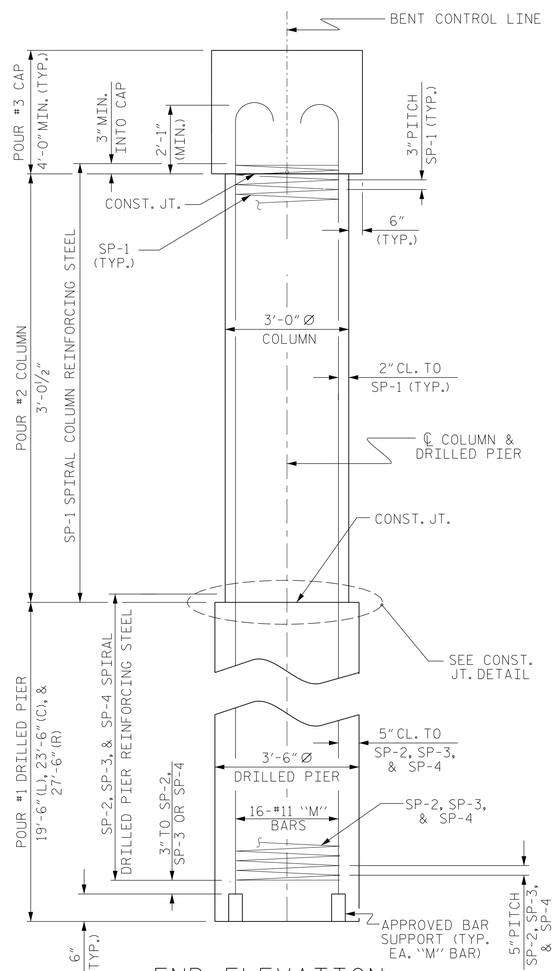


## END ELEVATION

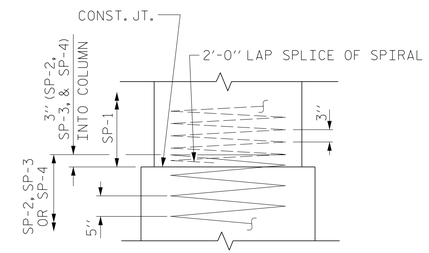


## CONSTRUCTION JOINT DETAIL

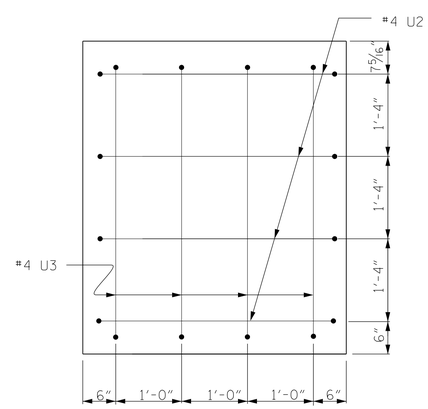


## LEFT END OF CAP VIEW

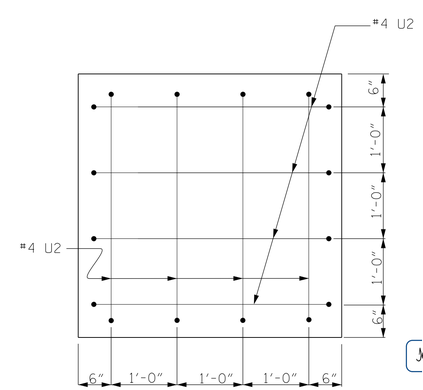


## RIGHT END OF CAP VIEW

DocuSigned by: Jeff Loftus FE51DC02E6794A9... 8/26/2016

NORTH CAROLINA PROFESSIONAL SEAL 041425 ENGINEER JEFFREY M. LOFTUS

DOCUMENT NOT CONSIDERED FINAL UNLESS ALL SIGNATURES COMPLETED

PROJECT NO. 17BP.5.R.50

FRANKLIN COUNTY

STATION: 15+46.00 -L-

SHEET 2 OF 3

STATE OF NORTH CAROLINA
DEPARTMENT OF TRANSPORTATION
RALEIGH

SUBSTRUCTURE
BENT NO. 2

STEWART
Firm License No. C-1051
421 Fayetteville St,
Suite 400
Raleigh, NC 27601
T 919.380.8750
www.stewartinc.com

| REVISIONS | | | | | | SHEET NO. |
|---|---|---|---|---|---|---|
| NO. | BY: | DATE: | NO. | BY: | DATE: | S-31 |
| 1 | | | 3 | | | TOTAL SHEETS |
| 2 | | | 4 | | | 35 |

| | | |
|---|---|---|
| DRAWN BY: H.ASSFOURA | DATE : 08/15 | |
| CHECKED BY: J. LOFTUS | DATE : 09/15 | |
| DESIGN ENGINEER OF RECORD: J. LOFTUS | DATE : 03/16 | |

BRIDGE NO: T20026

8/26/2016
...\400.031.17BP5R50.SMU.2B02.dgn
USER:jloftus

DocuSign Envelope ID: D287D744-7745-45ED-A608-C74816553493

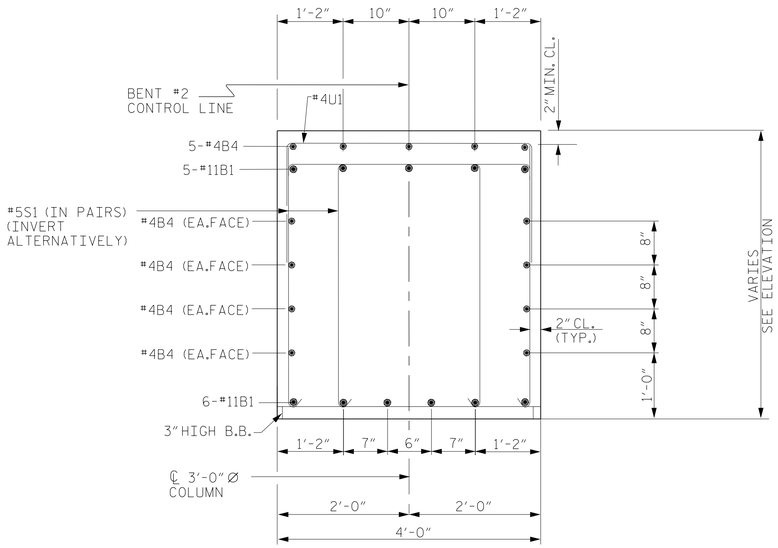


SECTION Y-Y

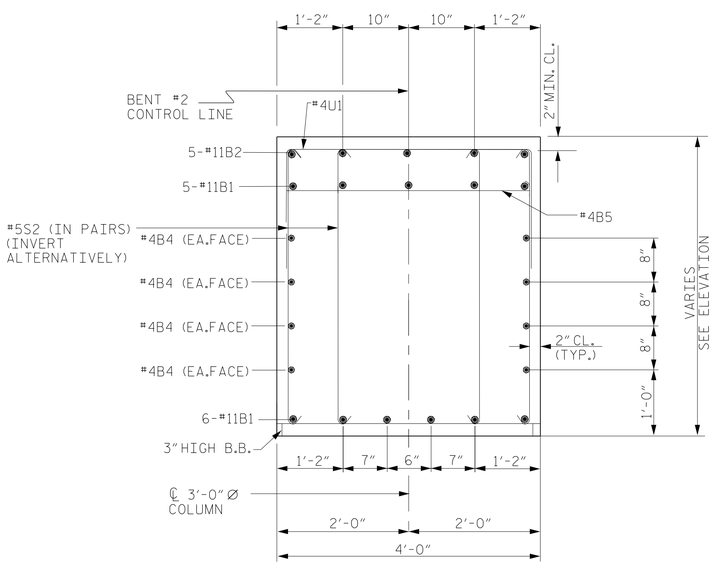


SECTION Z-Z

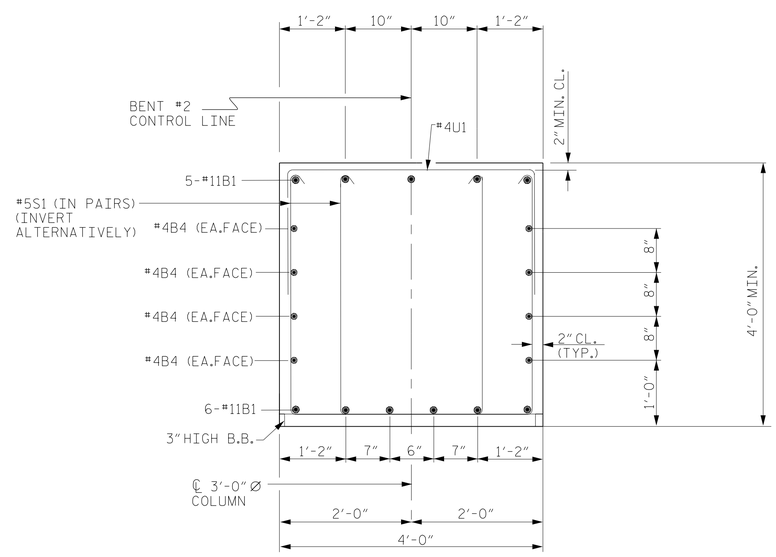


SECTION X-X

## BAR TYPES

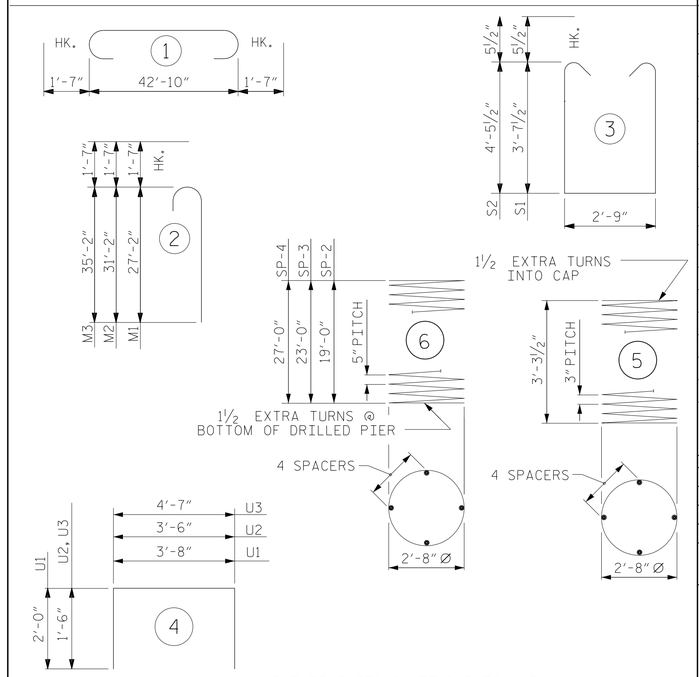


ALL BAR DIMENSIONS ARE OUT TO OUT.

## BILL OF MATERIAL
### FOR BENT NO. 2

| BAR | NO. | SIZE | TYPE | LENGTH | WEIGHT |
|---|---|---|---|---|---|
| B1 | 11 | #11 | 1 | 46'-0" | 2688 |
| B2 | 5 | #11 | STR | 16'-7" | 441 |
| B3 | 5 | #4 | STR | 18'-4" | 61 |
| B4 | 16 | #4 | STR | 22'-9" | 243 |
| B5 | 5 | #4 | STR | 3'-8" | 12 |
| S1 | 88 | #5 | 3 | 10'-11" | 1002 |
| S2 | 60 | #5 | 3 | 12'-7" | 787 |
| M1 | 16 | #11 | 2 | 28'-9" | 2444 |
| M2 | 16 | #11 | 2 | 32'-9" | 2784 |
| M3 | 16 | #11 | 2 | 36'-9" | 3124 |
| U1 | 58 | #4 | 4 | 7'-8" | 297 |
| U2 | 12 | #4 | 4 | 6'-6" | 52 |
| U3 | 4 | #4 | 4 | 7'-7" | 20 |

REINFORCING STEEL
(BENT NO. 2) 13955 LBS.

| | | | | | |
|---|---|---|---|---|---|
| SP-1 | 3 | ✱✱ | 5 | 121'-0" | 243 |
| SP-2 | 1 | ✱ | 6 | 391'-0" | 408 |
| SP-3 | 1 | ✱ | 6 | 469'-7" | 490 |
| SP-4 | 1 | ✱ | 6 | 550'-3" | 574 |

SPIRAL COLUMN REINFORCING STEEL
(BENT NO. 2) 1715 LBS.

✱ THE SP-2, SP-3, SP-4 SPIRAL REINFORCING STEEL SHALL BE W31 OR D-31 COLD DRAWN WIRE OR #5 PLAIN OR DEFORMED BAR

✱✱ THE SP-1 SPIRAL REINFORCING STEEL SHALL BE W20 OR D-20 COLD DRAWN WIRE OR #4 PLAIN OR DEFORMED BAR

CLASS A CONCRETE BREAKDOWN
(FOR BENT NO. 2)

| | |
|---|---|
| POUR #2 (COLUMNS) | 2.4 C.Y. |
| POUR #3 (CAP) | 29.2 C.Y. |
| TOTAL CLASS A CONCRETE | 31.6 C.Y. |

DRILLED PIERS:
(FOR BENT NO. 2)

| | |
|---|---|
| DRILLED PIER CONCRETE POUR #1 (DRILLED PIERS) | 25.1 C.Y. |
| 3'-6" Ø DRILLED PIER NOT IN SOIL | 26 LIN. FT. |
| 3'-6" Ø DRILLED PIER IN SOIL | 44.5 LIN. FT. |
| PERMANENT STEEL CASING FOR 3'-6" Ø DRILLED PIER | 44.5 LIN. FT. |
| CSL TUBES | 300 LIN. FT. |

PROJECT NO. 17BP.5.R.50

FRANKLIN COUNTY

STATION: 15+46.00 -L-

SHEET 3 OF 3

DocuSigned by: Jeff Loftus FE51DC02E6794A9... 8/26/2016

NORTH CAROLINA PROFESSIONAL SEAL 041425 ENGINEER JEFFREY M. LOFTUS

DOCUMENT NOT CONSIDERED FINAL UNLESS ALL SIGNATURES COMPLETED

STEWART

Firm License No. C-1051
421 Fayetteville St,
Suite 400
Raleigh, NC 27601
T 919.380.8750
www.stewartinc.com

STATE OF NORTH CAROLINA
DEPARTMENT OF TRANSPORTATION
RALEIGH

SUBSTRUCTURE
BENT NO. 2

| REVISIONS | | | | | | SHEET NO. |
|---|---|---|---|---|---|---|
| NO. | BY: | DATE: | NO. | BY: | DATE: | S-32 |
| 1 | | | 3 | | | TOTAL SHEETS |
| 2 | | | 4 | | | 35 |

| | | | |
|---|---|---|---|
| DRAWN BY: | H.ASSFOURA | DATE : | 08/15 |
| CHECKED BY: | J. LOFTUS | DATE : | 09/15 |
| DESIGN ENGINEER OF RECORD: | J. LOFTUS | DATE : | 03/16 |

BRIDGE NO: 720026

8/26/2016
...\400_032_17BP5R50_SMU_2B03.dgn
USER:jloftus

DocuSign Envelope ID: D287D744-7745-45ED-A608-C74816553493

NOTES :

FOR BERM WIDTH DIMENSIONS, SEE GENERAL DRAWING.

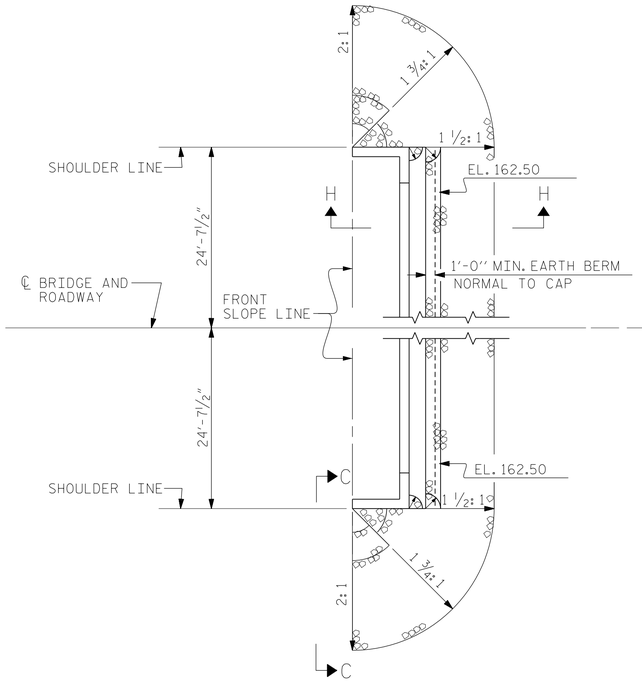


END BENT NO. 1

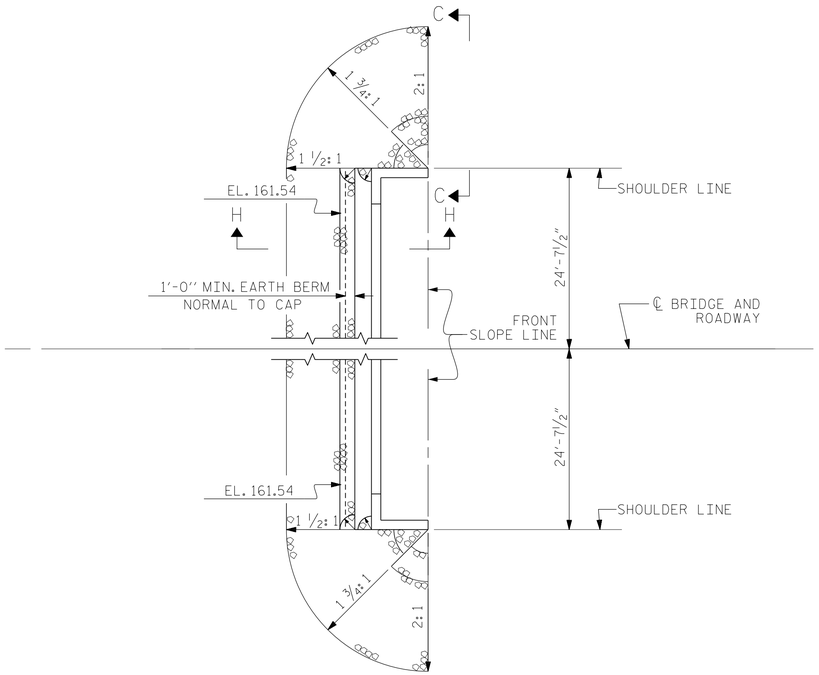


END BENT NO. 2

PLAN

| ESTIMATED QUANTITIES | | |
|---|---|---|
| BRIDGE @ STA. 15+46.00 -L- | RIP RAP CLASS II (2'-0" THICK) | GEOTEXTILE FOR DRAINAGE |
| | TONS | SQUARE YARDS |
| END BENT 1 | 163.0 | 181.1 |
| END BENT 2 | 97.7 | 108.5 |
| BANK STAB. - END BENT 1 | * 50.0 | * 65.0 |
| BANK STAB. - END BENT 2 | * 75.0 | * 85.0 |

* SEE GENERAL PLAN DWG FOR LIMITS OF BANK STABILIZATION CLASS II RIP RAP

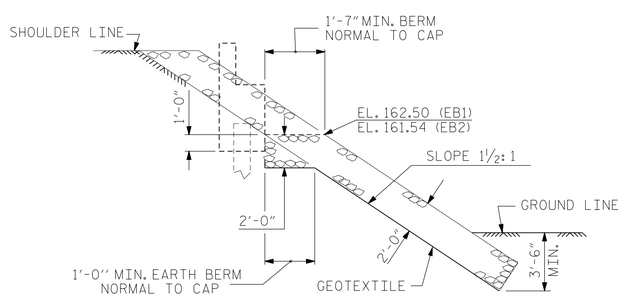


SECTION H-H

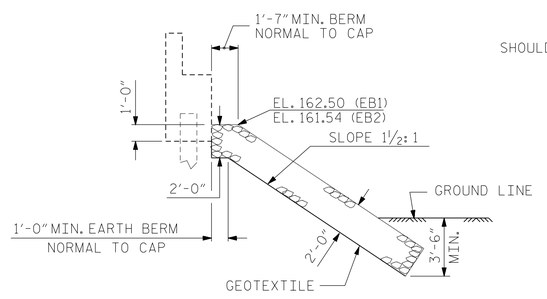


℄ SECTION

BERM RIP RAPPED

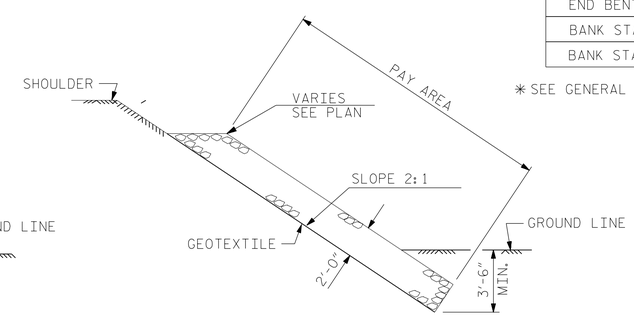


SECTION C-C

PROJECT NO. 17BP.5.R.50

FRANKLIN COUNTY

STATION: 15+46.00 -L-

DocuSigned by: Jeff Loftus FE51DC02E6794A8... 8/26/2016

NORTH CAROLINA PROFESSIONAL SEAL 041425 ENGINEER JEFFREY M. LOFTUS

DOCUMENT NOT CONSIDERED FINAL UNLESS ALL SIGNATURES COMPLETED

STEWART

Firm License No. C-1051
421 Fayetteville St,
Suite 400
Raleigh, NC 27601
T 919.380.8750
www.stewartinc.com

STATE OF NORTH CAROLINA
DEPARTMENT OF TRANSPORTATION
RALEIGH

STANDARD

RIP RAP DETAILS

| REVISIONS | | | | | | SHEET NO. |
|---|---|---|---|---|---|---|
| NO. | BY: | DATE: | NO. | BY: | DATE: | S-33 |
| 1 | | | 3 | | | TOTAL SHEETS |
| 2 | | | 4 | | | 35 |

| | | | |
|---|---|---|---|
| DRAWN BY: | H.ASSFOURA | DATE : | 03/15 |
| CHECKED BY: | J. LOFTUS | DATE : | 09/15 |
| DESIGN ENGINEER OF RECORD: | J. LOFTUS | DATE : | 03/16 |

BRIDGE NO: 720026

8/26/2016
...\400_033_17BP5R50_SMU_RR01.dgn
USER:jloftus

DocuSign Envelope ID: D287D744-7745-45ED-A608-C74816553493

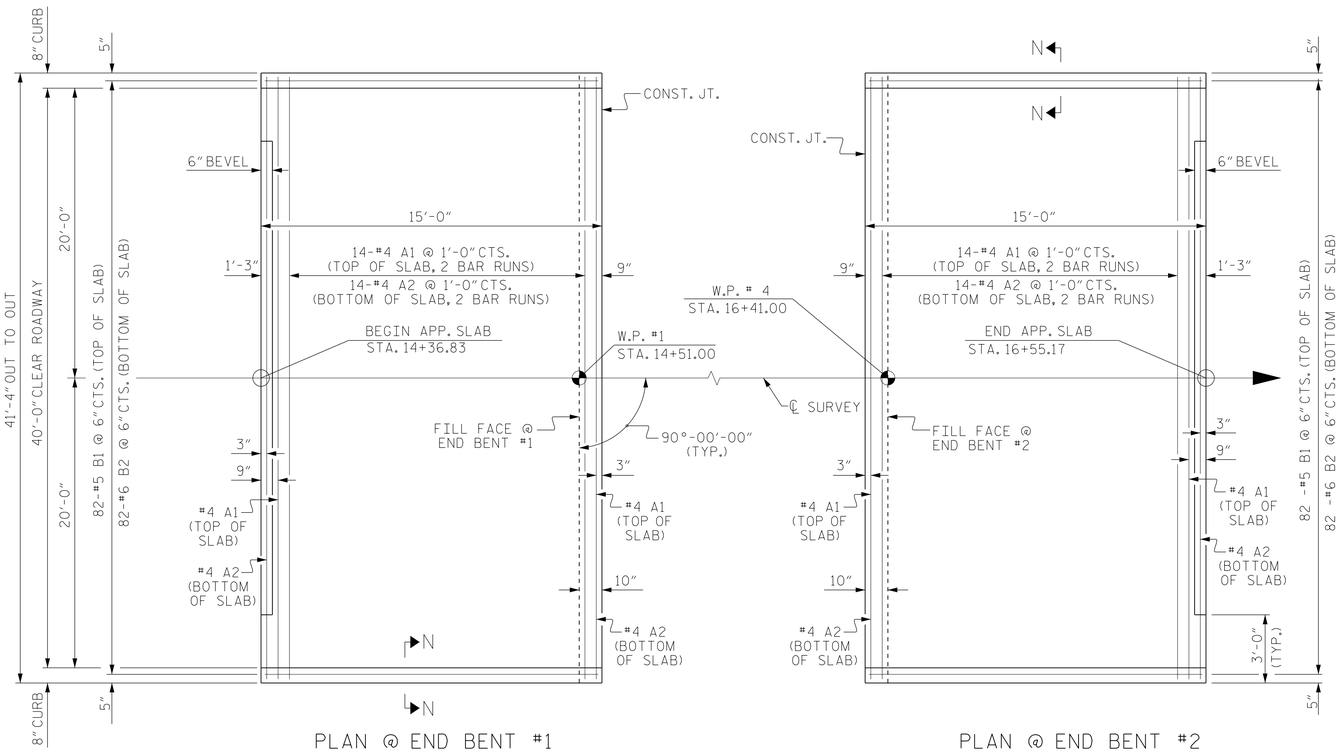


PLAN @ END BENT #1

PLAN @ END BENT #2

DIMENSIONS SHOWN ARE TYPICAL FOR BOTH APPROACH SLABS

## NOTES

APPROACH SLAB SHALL NOT BE CONSTRUCTED PRIOR TO COMPLETION OF THE BRIDGE DECK.

FOR REINFORCED BRIDGE APPROACH FILL FABRIC WALL INCLUDING GEOTEXTILE, IMPERMEABLE GEOMEMBRANE, 4" Ø DRAINAGE PIPE, #78M STONE, WELDED WIRE FORM, AND SELECT MATERIAL, SEE ROADWAY PLANS.

AREA BETWEEN THE WINGWALL AND APPROACH SLAB SHALL BE GRADED TO DRAIN THE WATER AWAY FROM THE FILL FACE OF THE BRIDGE AND SHALL BE PAVED. SEE ROADWAY PLANS.

THE JOINT OPENING AT THE APPROACH SLAB/DECK INTERFACE SHALL BE SAWED NO MORE THAN 12 HOURS AFTER THE APPROACH SLAB IS CAST. THE JOINT SHALL BE CLEANED OF ALL DEBRIS BEFORE THE SEALANT IS APPLIED. THE JOINT SEALER MATERIAL SHALL CONFORM TO THE REQUIREMENTS OF SECTION 1028-3 OF THE STANDARD SPECIFICATIONS.

## BILL OF MATERIAL

FOR ONE APPROACH SLAB (2 REQ'D)

| BAR | NO. | SIZE | TYPE | LENGTH | WEIGHT |
|---|---|---|---|---|---|
| * A1 | 32 | #4 | STR | 21'-6" | 460 |
| A2 | 32 | #4 | STR | 21'-5" | 458 |
| * B1 | 82 | #5 | STR | 14'-2" | 1212 |
| B2 | 82 | #6 | STR | 14'-8" | 1806 |
| REINFORCING STEEL | | | | LBS. | 2264 |
| * EPOXY COATED REINFORCING STEEL | | | | LBS. | 1672 |
| CLASS AA CONCRETE | | | | | 26.8 C.Y. |

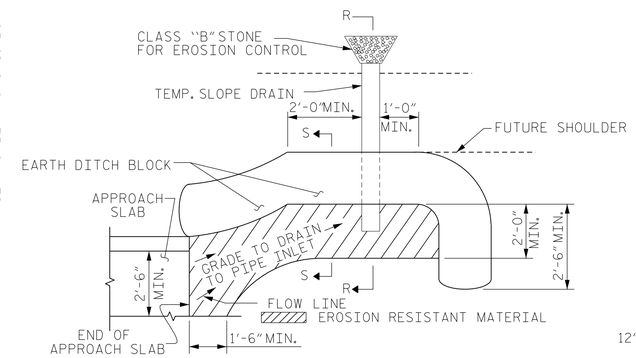


NOTE: IMMEDIATELY AFTER THE CONSTRUCTION OF THE APPROACH SLAB, THE CONTRACTOR SHALL PROVIDE TEMPORARY BERM AND SLOPE DRAIN. CONTRACTOR SHALL GRADE TO PIPE INLET AND PROVIDE EROSION RESISTANT MATERIAL AS SHOWN. THE EROSION RESISTANT MATERIAL SHALL BE EITHER 1) ASPHALT PLANT MIX, TYPE 1 OR TYPE 2, MIN. 2" DEPTH, 2) EROSION CONTROL MAT, OR 3) CONCRETE, AS DIRECTED BY THE ENGINEER. THE SLOPE DRAIN SHALL CONSIST OF A NON-PERFORATED TEMPORARY DRAINAGE PIPE, 12 INCHES IN DIAMETER.

PLAN VIEW

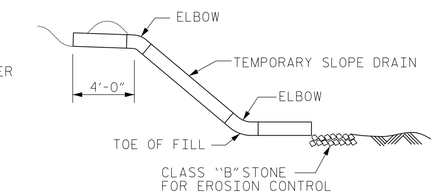


SECTION R-R

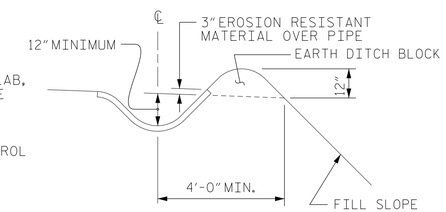


SECTION S-S

## TEMPORARY BERM AND SLOPE DRAIN DETAILS

(TO BE USED WHEN SHOULDER BERM GUTTER IS REQUIRED)

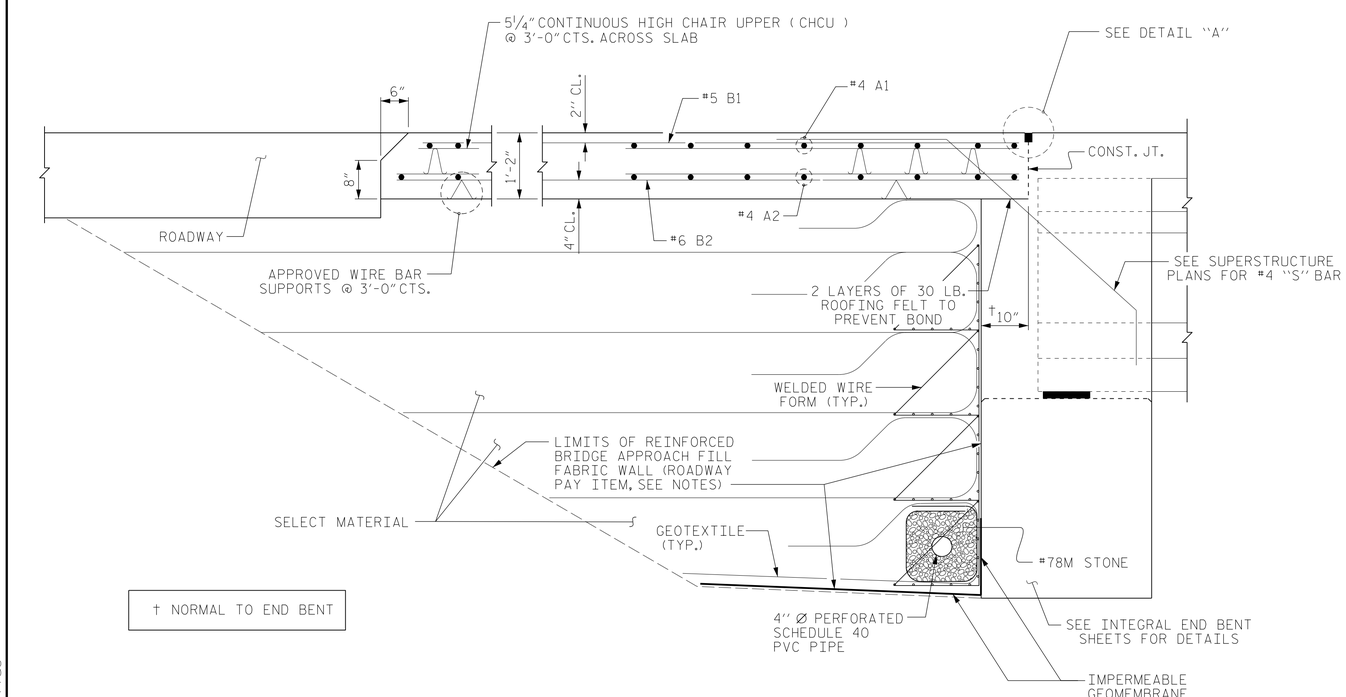


† NORMAL TO END BENT

SECTION THRU SLAB

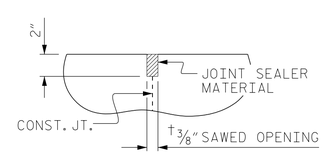


DETAIL "A"

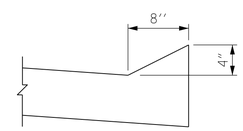


SECTION N-N

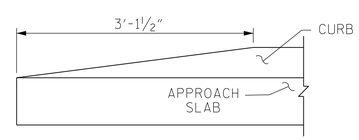


END OF CURB WITHOUT SHOULDER BERM GUTTER

| SPLICE LENGTHS | | |
|---|---|---|
| BAR SIZE | EPOXY COATED | UNCOATED |
| #4 | 2'-0" | 1'-9" |
| #5 | 2'-6" | 2'-2" |
| #6 | 3'-10" | 2'-7" |

PROJECT NO. 17BP.5.R.50

FRANKLIN COUNTY

STATION: 15+46.00 -L-

DocuSigned by: Jeff Loftus FE51DC02E679AA9...

8/26/2016

NORTH CAROLINA PROFESSIONAL SEAL 041425 ENGINEER JEFFREY M. LOFTUS

DOCUMENT NOT CONSIDERED FINAL UNLESS ALL SIGNATURES COMPLETED

STATE OF NORTH CAROLINA
DEPARTMENT OF TRANSPORTATION
RALEIGH

STANDARD

BRIDGE APPROACH SLAB FOR INTEGRAL ABUTMENT

STEWART

Firm License No. C-1051
421 Fayetteville St,
Suite 400
Raleigh, NC 27601
T 919.380.8750
www.stewartinc.com

| REVISIONS | | | | | | SHEET NO. |
|---|---|---|---|---|---|---|
| NO. | BY: | DATE: | NO. | BY: | DATE: | S-34 |
| 1 | | | 3 | | | TOTAL SHEETS |
| 2 | | | 4 | | | 35 |

| | | |
|---|---|---|
| DRAWN BY: | H.ASSFOURA | DATE: 02/15 |
| CHECKED BY: | J. LOFTUS | DATE: 10/15 |
| DESIGN ENGINEER OF RECORD: | J. LOFTUS | DATE: 03/16 |

BRIDGE NO: 720026

8/26/2016
...\400_034_17BP5R50_SMU_BAS01.dgn
USER:jloftus

STD. NO. BAS5

DocuSign Envelope ID: D287D744-7745-45ED-A608-C74816553493

# STANDARD NOTES

## DESIGN DATA:

| | |
|---|---|
| SPECIFICATIONS | A.A.S.H.T.O. (CURRENT) |
| LIVE LOAD | SEE PLANS |
| IMPACT ALLOWANCE | SEE A.A.S.H.T.O. |
| STRESS IN EXTREME FIBER OF | |
| STRUCTURAL STEEL - AASHTO M270 GRADE 36 | 20,000 LBS. PER SQ. IN. |
| - AASHTO M270 GRADE 50W | 27,000 LBS. PER SQ. IN. |
| - AASHTO M270 GRADE 50 | 27,000 LBS. PER SQ. IN. |
| REINFORCING STEEL IN TENSION | |
| GRADE 60 | 24,000 LBS. PER SQ. IN. |
| CONCRETE IN COMPRESSION | 1,200 LBS. PER SQ. IN. |
| CONCRETE IN SHEAR | SEE A.A.S.H.T.O. |
| STRUCTURAL TIMBER - TREATED OR | |
| UNTREATED - EXTREME FIBER STRESS | 1,800 LBS. PER SQ. IN. |
| COMPRESSION PERPENDICULAR TO GRAIN OF TIMBER | 375 LBS. PER SQ. IN. |
| EQUIVALENT FLUID PRESSURE OF EARTH | 30 LBS. PER CU. FT. (MINIMUM) |

## MATERIAL AND WORKMANSHIP:

EXCEPT AS MAY OTHERWISE BE SPECIFIED ON PLANS OR IN THE SPECIAL PROVISIONS, ALL MATERIAL AND WORKMANSHIP SHALL BE IN ACCORDANCE WITH THE 2012 "STANDARD SPECIFICATIONS FOR ROADS AND STRUCTURES" OF THE N. C. DEPARTMENT OF TRANSPORTATION.

STEEL SHEET PILING FOR PERMANENT OR TEMPORARY APPLICATIONS SHALL BE HOT ROLLED.

## CONCRETE:

UNLESS OTHERWISE REQUIRED ON PLANS, CLASS A CONCRETE SHALL BE USED FOR ALL PORTIONS OF ALL STRUCTURES WITH THE EXCEPTION THAT: CLASS AA CONCRETE SHALL BE USED IN BRIDGE SUPERSTRUCTURES, ABUTMENT BACKWALLS, AND APPROACH SLABS; AND CLASS B CONCRETE SHALL BE USED FOR SLOPE PROTECTION AND RIP RAP.

## CONCRETE CHAMFERS:

UNLESS OTHERWISE NOTED ON THE PLANS, ALL EXPOSED CORNERS ON STRUCTURES SHALL BE CHAMFERED 3/4" WITH THE FOLLOWING EXCEPTIONS: TOP CORNERS OF CURBS MAY BE ROUNDED TO 1-1/2" RADIUS WHICH IS BUILT INTO CURB FORMS; CORNERS OF TRANSVERSE FLOOR EXPANSION JOINTS SHALL BE ROUNDED WITH A 1/4" FINISHING TOOL UNLESS OTHERWISE REQUIRED ON PLANS; AND CORNERS OF EXPANSION JOINTS IN THE ROADWAY FACES AND TOPS OF CURBS AND SIDEWALKS SHALL BE ROUNDED TO A 1/4" RADIUS WITH A FINISHING STONE OR TOOL UNLESS OTHERWISE REQUIRED ON PLANS.

## DOWELS:

DOWELS WHEN INDICATED ON PLANS AS FOR CULVERT EXTENSIONS, SHALL BE EMBEDDED AT LEAST 12" INTO THE OLD CONCRETE AND GROUTED INTO PLACE WITH 1:2 CEMENT MORTAR.

## ALLOWANCE FOR DEAD LOAD DEFLECTION, SETTLEMENT, ETC. IN CASTING SUPERSTRUCTURES:

BRIDGES SHALL BE BUILT ON THE GRADE OR VERTICAL CURVE SHOWN ON PLANS. SLABS, CURBS AND PARAPETS SHALL CONFORM TO THE GRADE OR CURVE.

ALL DIMENSIONS WHICH ARE GIVEN IN SECTION AND ARE AFFECTED BY DEAD LOAD DEFLECTIONS ARE DIMENSIONS AT CENTER LINE OF BEARING UNLESS OTHERWISE NOTED ON PLANS. IN SETTING FORMS FOR STEEL BEAM BRIDGES AND PRESTRESSED CONCRETE GIRDER BRIDGES, ADJUSTMENTS SHALL BE MADE DUE TO THE DEAD LOAD DEFLECTIONS FOR THE ELEVATIONS SHOWN. WHERE BLOCKS ARE SHOWN OVER BEAMS FOR BUILDING UP TO THE SLAB, THE VERTICAL DIMENSIONS OF THE BLOCKS SHALL BE ADJUSTED BETWEEN BEARINGS TO COMPENSATE FOR DEAD LOAD DEFLECTIONS, VERTICAL CURVE ORDINATE, AND ACTUAL BEAM CAMBER. WHERE BOTTOM OF SLAB IS IN LINE WITH BOTTOM OF TOP FLANGES, DEPTH OF SLAB BETWEEN BEARINGS SHALL BE ADJUSTED TO COMPENSATE FOR DEAD LOAD DEFLECTION, VERTICAL CURVE ORDINATE, AND ACTUAL BEAM CAMBER.

IN SETTING FALSEWORK AND FORMS FOR REINFORCED CONCRETE SPANS, AN ALLOWANCE SHALL BE MADE FOR DEAD LOAD DEFLECTIONS, SETTLEMENT OF FALSEWORK, AND PERMANENT CAMBER WHICH SHALL BE PROVIDED FOR IN ADDITION TO THE ELEVATIONS SHOWN. AFTER REMOVAL OF THE FALSEWORK, THE FINISHED STRUCTURES SHALL CONFORM TO THE PROFILE AND ELEVATIONS SHOWN ON THE PLANS AND CONSTRUCTION ELEVATIONS FURNISHED BY THE ENGINEER.

DETAILED DRAWINGS FOR FALSEWORK OR FORMS FOR BRIDGE SUPERSTRUCTURE AND ANY STRUCTURE OR PARTS OF A STRUCTURE AS NOTED ON THE PLANS SHALL BE SUBMITTED TO THE ENGINEER FOR APPROVAL BEFORE CONSTRUCTION OF THE FALSEWORK OR FORMS IS STARTED.

## REINFORCING STEEL:

ALL REINFORCING STEEL SHALL BE DEFORMED. DIMENSIONS RELATIVE TO PLACEMENT OF REINFORCING ARE TO CENTERS OF BARS UNLESS OTHERWISE INDICATED IN THE PLANS. DIMENSIONS ON BAR DETAILS ARE TO CENTERS OF BARS OR ARE OUT TO OUT AS INDICATED ON PLANS.

WIRE BAR SUPPORTS SHALL BE PROVIDED FOR REINFORCING STEEL WHERE INDICATED ON THE PLANS. WHEN BAR SUPPORT PIECES ARE PLACED IN CONTINUOUS LINES, THEY SHALL BE SO PLACED THAT THE ENDS OF THE SUPPORTING WIRES SHALL BE LAPPED TO LOCK LEGS ON ADJOINING PIECES.

## STRUCTURAL STEEL:

AT THE CONTRACTOR'S OPTION, HE MAY SUBSTITUTE 7/8" Ø SHEAR STUDS FOR THE 3/4" Ø STUDS SPECIFIED ON THE PLANS. THIS SUBSTITUTION SHALL BE MADE AT THE RATE OF 3 - 7/8" Ø STUDS FOR 4 - 3/4" Ø STUDS, AND STUD SPACING CHANGES SHALL BE MADE AS NECESSARY TO PROVIDE THE SAME EQUIVALENT NUMBER OF 7/8" Ø STUDS ALONG THE BEAM AS SHOWN FOR 3/4" Ø STUDS BASED ON THE RATIO OF 3 - 7/8" Ø STUDS FOR 4 - 3/4" Ø STUDS. STUDS OF THE LENGTH SPECIFIED ON THE PLANS MUST BE PROVIDED. THE MAXIMUM SPACING SHALL BE 2'-0".

EXCEPT AT THE INTERIOR SUPPORTS OF CONTINUOUS BEAMS WHERE THE COVER PLATE IS IN CONTACT WITH BEARING PLATE, THE CONTRACTOR MAY, AT HIS OPTION, SUBSTITUTE FOR THE COVER PLATES DESIGNATED ON THE PLANS COVER PLATES OF THE EQUIVALENT AREA PROVIDED THESE PLATES ARE AT LEAST 5/16" IN THICKNESS AND DO NOT EXCEED A WIDTH EQUAL TO THE FLANGE WIDTH LESS 2" OR A THICKNESS EQUAL TO 2 TIMES THE FLANGE THICKNESS. THE SIZE OF FILLET WELDS SHALL CONFORM TO THE REQUIREMENTS OF THE CURRENT ANSI/AASHTO/AWS "BRIDGE WELDING CODE". ELECTROSLAG WELDING WILL NOT BE PERMITTED.

WITH THE SOLE EXCEPTION OF EDGES AT SURFACES WHICH BEAR ON OTHER SURFACES, ALL SHARP EDGES AND ENDS OF SHAPES AND PLATES SHALL BE SLIGHTLY ROUNDED BY SUITABLE MEANS TO A RADIUS OF APPROXIMATELY 1/16 INCH OR EQUIVALENT FLAT SURFACE AT A SUITABLE ANGLE PRIOR TO PAINTING, GALVANIZING, OR METALLIZING.

## HANDRAILS AND POSTS:

METAL STANDARDS AND FACES OF THE CONCRETE END POSTS FOR THE METAL RAIL SHALL BE SET NORMAL TO THE GRADE OF THE CURB, UNLESS OTHERWISE SHOWN ON PLANS. THE METAL RAIL AND TOPS OF CONCRETE POSTS USED WITH THE ALUMINUM RAIL SHALL BE BUILT PARALLEL TO THE GRADE OF THE CURB.

METAL HANDRAILS SHALL BE IN ACCORDANCE WITH THE PLANS. RAILS SHALL BE AS MANUFACTURED FOR BRIDGE RAILING. CASTINGS SHALL BE OF A UNIFORM APPEARANCE. FINS AND OTHER DEFORMATIONS RESULTING FROM CASTING OR OTHERWISE SHALL BE REMOVED IN A MANNER SO THAT A UNIFORM COLORING OF THE COMPLETED CASTING SHALL BE OBTAINED. CASTINGS WITH DISCOLORATIONS OR OF NON-UNIFORM COLORING WILL NOT BE ACCEPTED. CERTIFIED MILL REPORTS ARE REQUIRED FOR METAL RAILS AND POSTS.

## SPECIAL NOTES:

GENERALLY, IN CASE OF DISCREPANCY, THIS STANDARD SHEET OF NOTES SHALL GOVERN OVER THE SPECIFICATIONS, BUT THE REMAINDER OF THE PLANS SHALL GOVERN OVER NOTES HEREON, AND SPECIAL PROVISIONS SHALL GOVERN OVER ALL. SEE SPECIFICATIONS ARTICLE 105-4.

PROJECT NO. 17BP.5.R.50

FRANKLIN COUNTY

STATION: 15+46.00 -L-

STATE OF NORTH CAROLINA
DEPARTMENT OF TRANSPORTATION
RALEIGH

STANDARD NOTES

ENGLISH

JANUARY, 1990

STEWART
Firm License No. C-1051
421 Fayetteville St,
Suite 400
Raleigh, NC 27601
T 919.380.8750
www.stewartinc.com

| REVISIONS | | | | | | | | SHEET NO. |
|---|---|---|---|---|---|---|---|---|
| NO. | BY: | DATE: | NO. | BY: | DATE: | | | S-35 |
| 1 | | | 3 | | | | | TOTAL SHEETS |
| 2 | | | 4 | | | | | 35 |

BRIDGE NO: 720026

8/26/2016
...\400_035_17BP5R50_SMU_SN01.dgn
USER:jloftus