09/08/99

17BP.5.R.35

CONTRACT:

STATE	STATE PROJECT REFERENCE NO.	SHEET NO.	TOTAL SHEETS
N.C.	17BP.5.R.35	1	

STATE PROJ. NO.	F. A. PROJ. NO.	DESCRIPTION
17BP.5.R.35		PE, R/W & UTIL.

See Sheet 1-A For Index of Sheets

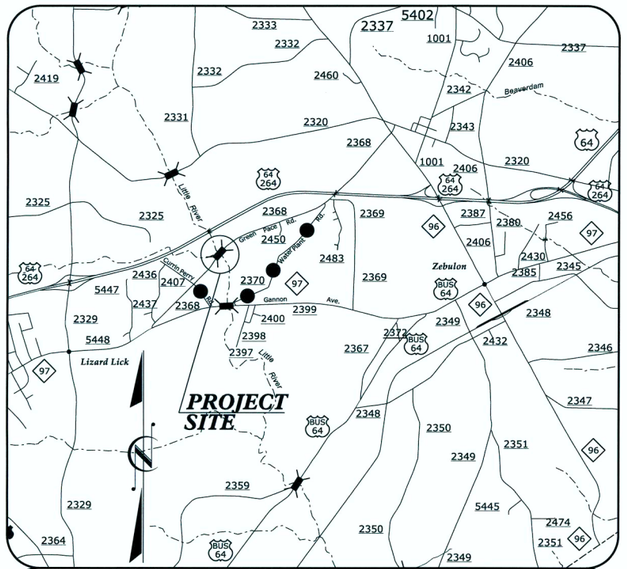

VICINITY MAP

OFF-SITE DETOUR

STATE OF NORTH CAROLINA
DIVISION OF HIGHWAYS

WAKE COUNTY

LOCATION: BRIDGE NO. 201 OVER LITTLE RIVER ON SR 2368 (GREEN PACE RD.)

TYPE OF WORK: GRADING, DRAINAGE, PAVING & STRUCTURE

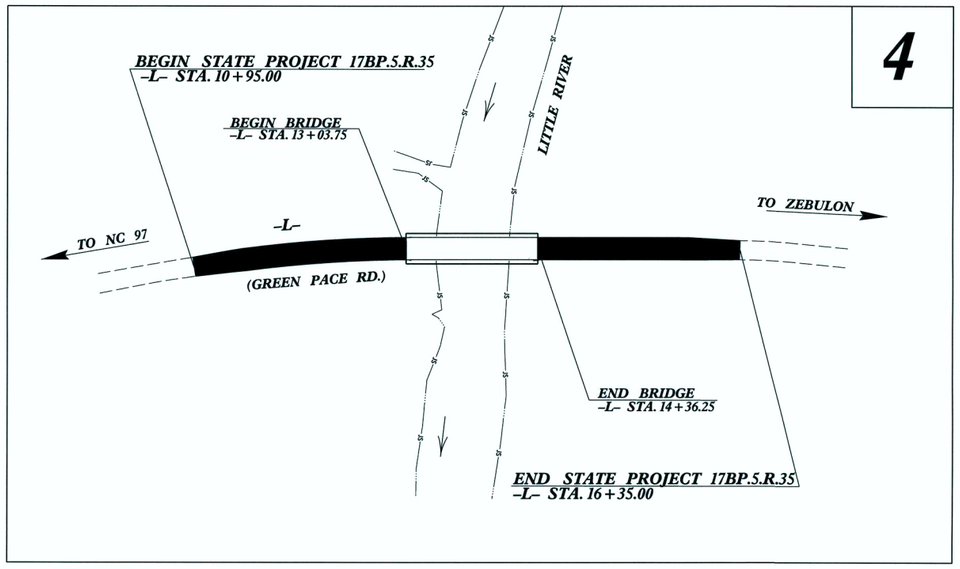

GRAPHIC SCALES

50 25 0 50 100
PLANS

50 25 0 50 100
PROFILE (HORIZONTAL)

10 5 0 10 20
PROFILE (VERTICAL)

DESIGN DATA

ADT 2012 = 1353
ADT 2032 = 2370
DHV = 10 %
D = 50 %
T = 6 % *
V = 55 MPH
* TTST = 3% DUAL 3%
FUNC CLASS = LOCAL

SUBREGIONAL TIER

PROJECT LENGTH

LENGTH ROADWAY STATE PROJECT 17BP.5.R.35 = 0.077 MILES
LENGTH STRUCTURE STATE PROJECT 17BP.5.R.35 = 0.025 MILES
TOTAL LENGTH STATE PROJECT 17BP.5.R.35 = 0.102 MILES

WETHERILL ENGINEERING

Prepared for the North Carolina Department of Transportation in the Office of:

559 JONES FRANKLIN ROAD
SUITE 164
Raleigh, N.C. 27606
Liscense No. F-0377
Bus: 919 851 8077
Fax: 919 851 8107

2012 STANDARD SPECIFICATIONS

RIGHT OF WAY DATE:
AUGUST 15, 2012

LETTING DATE:
MARCH 2014

EDWARD G. WETHERILL, PE
PROJECT ENGINEER

GREG S. PURVIS, PE
PROJECT DESIGN ENGINEER

HYDRAULICS ENGINEER

NORTH CAROLINA PROFESSIONAL SEAL 18462 ENGINEER JAMES C. DAVIS

SIGNATURE: 12/16/13 P.E.

ROADWAY DESIGN ENGINEER

NORTH CAROLINA PROFESSIONAL SEAL 022999 ENGINEER GREG S. PURVIS

SIGNATURE: 12/16/13 P.E.

STATE OF NORTH CAROLINA DEPARTMENT OF TRANSPORTATION

9:16:09 AM
P:\2012\Wake #201\Roadway\Proj\BR#201_Rdy_tsh.dgn
12/16/2013

GENERAL NOTES

GENERAL NOTES: 2012 SPECIFICATIONS
EFFECTIVE: 01-17-12
REVISED: 07-30-12

GRADING AND SURFACING OR RESURFACING AND WIDENING:

THE GRADE LINES SHOWN DENOTE THE FINISHED ELEVATION OF THE PROPOSED SURFACING AT GRADE POINTS SHOWN ON THE TYPICAL SECTIONS. WHERE NO GRADE LINES ARE SHOWN, THE PROFILES SHOWN DENOTE THE TOP ELEVATION OF THE EXISTING PAVEMENT ALONG THE CENTER LINE OF SURVEY ON WHICH THE PROPOSED RESURFACING WILL BE PLACED. GRADE LINES MAY BE ADJUSTED BY THE ENGINEER IN ORDER TO SECURE A PROPER TIE-IN.

CLEARING:

CLEARING ON THIS PROJECT SHALL BE PERFORMED TO THE LIMITS ESTABLISHED BY METHOD III.

SUPERELEVATION:

ALL CURVES ON THIS PROJECT SHALL BE SUPERELEVATED IN ACCORDANCE WITH STD. NO. 225.04 USING THE RATE OF SUPERELEVATION AND RUNOFF SHOWN ON THE PLANS. SUPERELEVATION IS TO BE REVOLVED ABOUT THE GRADE POINTS SHOWN ON THE TYPICAL SECTIONS.

SHOULDER CONSTRUCTION:

ASPHALT, EARTH, AND CONCRETE SHOULDER CONSTRUCTION ON THE HIGH SIDE OF SUPERELEVATED CURVES SHALL BE IN ACCORDANCE WITH STD. NO. 560.01.

GUARDRAIL:

THE GUARDRAIL LOCATIONS SHOWN ON THE PLANS MAY BE ADJUSTED DURING CONSTRUCTION AS DIRECTED BY THE ENGINEER. THE CONTRACTOR SHOULD CONSULT WITH THE ENGINEER PRIOR TO ORDERING GUARDRAIL MATERIAL.

END BENTS:

THE SURVEYOR SHALL CHECK THE STRUCTURE END BENT PLANS, DETAILS, AND CROSS-SECTION PRIOR TO SETTING OF THE SLOPE STAKES FOR THE EMBANKMENT OR EXCAVATION APPROACHING A BRIDGE.

UTILITIES:

UTILITY OWNERS ON THIS PROJECT ARE BELLSOUTH, PSNC AND PROGRESS ENERGY. ANY RELOCATION OF EXISTING UTILITIES WILL BE ACCOMPLISHED BY OTHERS.

RIGHT-OF-WAY MARKERS:

ALL RIGHT-OF-WAY MARKERS ON THIS PROJECT SHALL BE PLACED BY CONTRACT.

LIST OF ROADWAY STANDARD DRAWINGS

EFF. 01-17-12
REV. 10-30-12

2012 ROADWAY ENGLISH STANDARD DRAWINGS

The following Roadway Standards as appear in "Roadway Standard Drawings" Highway Design Branch – N. C. Department of Transportation – Raleigh, N. C., Dated January, 2012 are applicable to this project and by reference hereby are considered a part of these plans:

STD.NO.	TITLE
DIVISION 2 – EARTHWORK	
200.03	Method of Clearing – Method III
225.02	Guide for Grading Subgrade – Secondary and Local
225.04	Method of Obtaining Superelevation – Two Lane Pavement
DIVISION 3 – PIPE CULVERTS	
300.01	Method of Pipe Installation
DIVISION 4 – MAJOR STRUCTURES	
422.11	Reinforced Bridge Approach Fills – Sub Regional Tier
DIVISION 5 – SUBGRADE, BASES AND SHOULDERS	
560.01	Method of Shoulder Construction – High Side of Superelevated Curve – Method I
DIVISION 8 – INCIDENTALS	
840.00	Concrete Base Pad for Drainage Structures
840.29	Frames and Narrow Slot Flat Grates
840.35	Traffic Bearing Grated Drop Inlet – for Cast Iron Double Frame and Grates
840.46	Traffic Bearing Precast Drainage Structure
840.66	Drainage Structure Steps
846.01	Concrete Curb, Gutter and Curb & Gutter
846.04	Drop inlet Installation in Shoulder Berm Gutter
862.02	Guardrail Installation
876.02	Guide for Rip Rap at Pipe Outlets

INDEX OF SHEETS

SHEET NUMBER	SHEET
1	TITLE SHEET
1-A	INDEX OF SHEETS, GENERAL NOTES, AND LIST OF STANDARD DRAWINGS
1-B	CONVENTIONAL SYMBOLS
2	TYPICAL SECTIONS AND PAVEMENT SCHEDULE
2-A	STRUCTURE ANCHOR UNIT DETAIL SHEET
3	SUMMARY OF DRAINAGE QUANTITIES, GUARDRAIL SUMMARY, EARTHWORK SUMMARY, PAVEMENT REMOVAL SUMMARY, SHOULDER BERM GUTTER SUMMARY AND RIGHT OF WAY AREA DATA
4	PLAN SHEET
5	PROFILE SHEET
TCP-1 THRU TCP-3	TRAFFIC CONTROL PLANS
EC-1 THRU EC-3B	EROSION CONTROL PLANS
RF-1	REFORESTATION DETAIL SHEET
UO-1 THRU UO-2	UTILITIES BY OTHERS PLANS
X-1A	CROSS-SECTION SUMMARY
X-1 THRU X-4	CROSS-SECTIONS
S-1 THRU S-19	STRUCTURE PLANS
SN	STRUCTURE NOTES

8/17/99
9:29:18 AM
P:\2012\Wake #201\Roadway\Proj\BR#201_Rdy_tsh.dgn
2/3/2014

12/05/11

PROJECT REFERENCE NO.	SHEET NO.
17BP.5.R.35	1-B

Note: Not to Scale

****S.U.E. = Subsurface Utility Engineering***

STATE OF NORTH CAROLINA
DIVISION OF HIGHWAYS

CONVENTIONAL PLAN SHEET SYMBOLS

BOUNDARIES AND PROPERTY:

- State Line
- County Line
- Township Line
- City Line
- Reservation Line
- Property Line
- Existing Iron Pin — EIP
- Property Corner
- Property Monument — ECM
- Parcel/Sequence Number — 123
- Existing Fence Line
- Proposed Woven Wire Fence
- Proposed Chain Link Fence
- Proposed Barbed Wire Fence
- Existing Wetland Boundary — WLB
- Proposed Wetland Boundary — WLB
- Existing Endangered Animal Boundary — EAB
- Existing Endangered Plant Boundary — EPB
- Known Soil Contamination: Area or Site
- Potential Soil Contamination: Area or Site

BUILDINGS AND OTHER CULTURE:

- Gas Pump Vent or U/G Tank Cap
- Sign — S
- Well — W
- Small Mine
- Foundation
- Area Outline
- Cemetery
- Building
- School
- Church
- Dam

HYDROLOGY:

- Stream or Body of Water
- Hydro, Pool or Reservoir
- Jurisdictional Stream — JS
- Buffer Zone 1 — BZ 1
- Buffer Zone 2 — BZ 2
- Flow Arrow
- Disappearing Stream
- Spring
- Wetland
- Proposed Lateral, Tail, Head Ditch — FLOW
- False Sump

RAILROADS:

- Standard Gauge — CSX TRANSPORTATION
- RR Signal Milepost — MILEPOST 35
- Switch — SWITCH
- RR Abandoned
- RR Dismantled

RIGHT OF WAY:

- Baseline Control Point
- Existing Right of Way Marker
- Existing Right of Way Line
- Proposed Right of Way Line — RW
- Proposed Right of Way Line with Iron Pin and Cap Marker — RW
- Proposed Right of Way Line with Concrete or Granite R/W Marker — RW
- Proposed Control of Access Line with Concrete C/A Marker — CA
- Existing Control of Access — CA
- Proposed Control of Access — CA
- Existing Easement Line — E
- Proposed Temporary Construction Easement — E
- Proposed Temporary Drainage Easement — TDE
- Proposed Permanent Drainage Easement — PDE
- Proposed Permanent Drainage / Utility Easement — DUE
- Proposed Permanent Utility Easement — PUE
- Proposed Temporary Utility Easement — TUE
- Proposed Aerial Utility Easement — AUE
- Proposed Permanent Easement with Iron Pin and Cap Marker

ROADS AND RELATED FEATURES:

- Existing Edge of Pavement
- Existing Curb
- Proposed Slope Stakes Cut — C
- Proposed Slope Stakes Fill — F
- Proposed Curb Ramp — CR
- Existing Metal Guardrail
- Proposed Guardrail
- Existing Cable Guiderail
- Proposed Cable Guiderail
- Equality Symbol
- Pavement Removal

VEGETATION:

- Single Tree
- Single Shrub
- Hedge
- Woods Line
- Orchard
- Vineyard — Vineyard

EXISTING STRUCTURES:

MAJOR:

- Bridge, Tunnel or Box Culvert — CONC
- Bridge Wing Wall, Head Wall and End Wall — CONC WW

MINOR:

- Head and End Wall — CONC HW
- Pipe Culvert
- Footbridge
- Drainage Box: Catch Basin, DI or JB — CB
- Paved Ditch Gutter
- Storm Sewer Manhole — S
- Storm Sewer — S

UTILITIES:

POWER:

- Existing Power Pole
- Proposed Power Pole
- Existing Joint Use Pole
- Proposed Joint Use Pole
- Power Manhole — P
- Power Line Tower
- Power Transformer
- U/G Power Cable Hand Hole
- H-Frame Pole
- Recorded U/G Power Line — P
- Designated U/G Power Line (S.U.E.*) — P

TELEPHONE:

- Existing Telephone Pole
- Proposed Telephone Pole
- Telephone Manhole — T
- Telephone Booth
- Telephone Pedestal — T
- Telephone Cell Tower
- U/G Telephone Cable Hand Hole — HH
- Recorded U/G Telephone Cable — T
- Designated U/G Telephone Cable (S.U.E.*) — T
- Recorded U/G Telephone Conduit — TC
- Designated U/G Telephone Conduit (S.U.E.*) — TC
- Recorded U/G Fiber Optics Cable — T FO
- Designated U/G Fiber Optics Cable (S.U.E.*) — T FO

WATER:

- Water Manhole — W
- Water Meter
- Water Valve
- Water Hydrant
- Recorded U/G Water Line
- Designated U/G Water Line (S.U.E.*)
- Above Ground Water Line — A/G Water

TV:

- TV Satellite Dish
- TV Pedestal — C
- TV Tower
- U/G TV Cable Hand Hole — HH
- Recorded U/G TV Cable — TV
- Designated U/G TV Cable (S.U.E.*) — TV
- Recorded U/G Fiber Optic Cable — TV FO
- Designated U/G Fiber Optic Cable (S.U.E.*) — TV FO

GAS:

- Gas Valve
- Gas Meter
- Recorded U/G Gas Line — G
- Designated U/G Gas Line (S.U.E.*) — G
- Above Ground Gas Line — A/G Gas

SANITARY SEWER:

- Sanitary Sewer Manhole
- Sanitary Sewer Cleanout
- U/G Sanitary Sewer Line — SS
- Above Ground Sanitary Sewer — A/G Sanitary Sewer
- Recorded SS Forced Main Line — FSS
- Designated SS Forced Main Line (S.U.E.*) — FSS

MISCELLANEOUS:

- Utility Pole
- Utility Pole with Base
- Utility Located Object
- Utility Traffic Signal Box — S
- Utility Unknown U/G Line — ?UTL
- U/G Tank; Water, Gas, Oil
- Underground Storage Tank, Approx. Loc. — UST
- A/G Tank; Water, Gas, Oil
- Geoenvironmental Boring
- U/G Test Hole (S.U.E.*)
- Abandoned According to Utility Records — AATUR
- End of Information — E.O.I.

PROJECT REFERENCE NO.	SHEET NO.
17BP.5.R.35	2
R/W SHEET NO.	

ROADWAY DESIGN ENGINEER

NORTH CAROLINA PROFESSIONAL SEAL 022999 ENGINEER GREG S. PURVIS

12/10/13

WETHERILL ENGINEERING
559 Jones Franklin Rd. Suite 164
Raleigh, N.C. 27606
Liscense No. F-0377
Bus: 919 851 8077
Fax: 919 851 8107

TRANSPORTATION PLANNING/DESIGN - BRIDGE/STRUCTURE DESIGN
CIVIL/SITE DESIGN - GIS/GPS - CONSTRUCTION OBSERVATION

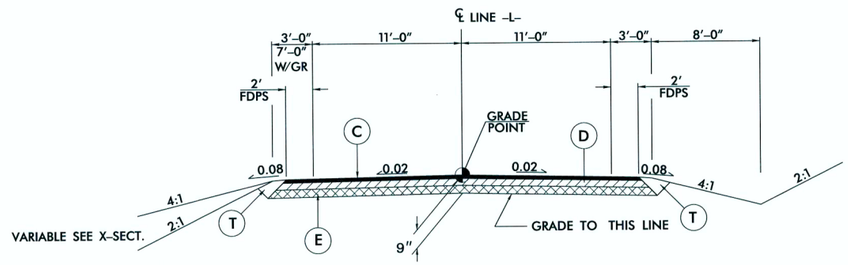

TYPICAL SECTION NO. 1

USE TYPICAL SECTION NO. 1 AS FOLLOWS:

-L- STA. 10+95.00 TO -L- STA. 13+03.75 (BEGIN BRIDGE)
-L- STA. 14+36.25 (END BRIDGE) TO -L- STA. 16+35.00

PAVEMENT SCHEDULE

(FINAL PAVEMENT DESIGN)

C	PROP. APPROX. 1½" ASPHALT CONCRETE SURFACE COURSE, TYPE SF9.5A, AT AN AVERAGE RATE OF 165 LBS. PER SQ. YD.
C1	PROP. VAR. DEPTH ASPHALT CONCRETE SURFACE COURSE, TYPE SF9.5A, AT AN AVERAGE RATE OF 110 LBS. PER SQ. YD. PER 1" DEPTH. TO BE PLACED IN LAYERS NOT TO EXCEED 1½" IN DEPTH.
D	PROP. APPROX. 3½" ASPHALT CONCRETE INTERMEDIATE COURSE, TYPE I19.0B, AT AN AVERAGE RATE OF 399 LBS. PER SQ. YD.
D1	PROP. VAR. DEPTH ASPHALT CONCRETE INTERMEDIATE COURSE, TYPE I19.0B, AT AN AVERAGE RATE OF 114 LBS. PER SQ. YD. PER 1" DEPTH, TO BE PLACED IN LAYERS NOT LESS THAN 2½" IN DEPTH OR GREATER THAN 4" IN DEPTH.
E	PROP. APPROX. 4" ASPHALT CONCRETE BASE COURSE, TYPE B25.0B, AT AN AVERAGE RATE OF 456 LBS. PER SQ. YD.
E1	PROP. VAR. DEPTH ASPHALT CONCRETE BASE COURSE, TYPE B25.0B, AT AN AVERAGE RATE OF 114 LBS. PER SQ. YD. PER 1" DEPTH. TO BE PLACED IN LAYERS NOT LESS THAN 3" IN DEPTH OR GREATER THAN 5½" IN DEPTH.
T	EARTH MATERIAL.
U	EXISTING PAVEMENT.
W	VARIABLE DEPTH ASPHALT PAVEMENT (SEE WEDGING DETAIL).

NOTE: PAVEMENT EDGE SLOPES ARE 1:1 UNLESS SHOWN OTHERWISE.

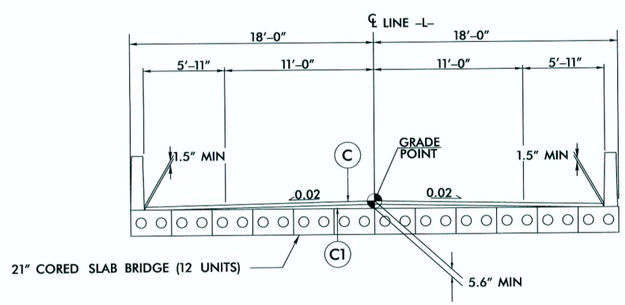

TYPICAL SECTION NO. 2

USE TYPICAL SECTION NO. 2 AS FOLLOWS:

-L- STA. 13+03.75 (BEGIN BRIDGE) TO -L- STA. 14+36.25 (END BRIDGE)

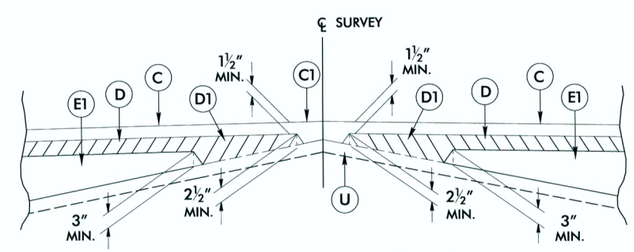

Detail Showing Method of Wedging

REVISIONS

8/17/99

12:24:43 PM
12/10/2013
Wake #201\Roadway\Proj\BR#201_Rdy_tip.dgn

$$$$$$SYSTIME$$$$$
$$$$$$$$$$$$$$$$DGN$$$$$$$$$$$$$$$$
$$$$USERNAME$$$$

STATE OF NORTH CAROLINA
DEPT. OF TRANSPORTATION
DIVISION OF HIGHWAYS
RALEIGH, N.C.

ENGLISH DETAIL DRAWING FOR
STRUCTURE ANCHOR UNITS
GUARDRAIL ANCHOR UNIT, TYPE III FOR ATTACHMENT TO
RAIL ON BRIDGE - SUB REGIONAL TIER

SHEET 2 OF 7
862d03

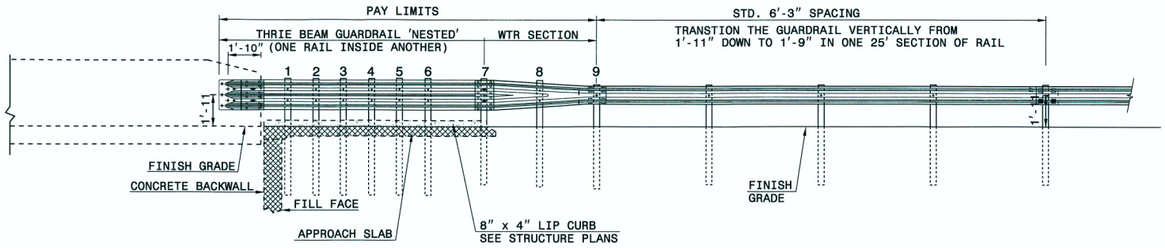

ELEVATION

NOTE:
**POST NOT REQUIRED FOR SKEW ANGLES GREATER THAN 150° OR LESS THAN 30° UNLESS OTHERWISE DIRECTED BY THE ENGINEER.
*THE DISTANCE FROM END OF BRIDGE RAIL TO CENTER LINE OF THE FIRST POST SHOULD BE 11½" IF CONCRETE BACKWALL IS NOT PRESENT.
-SHOULDER BERM GUTTER MUST BE INSTALLED TO THE LIMITS 8" x 4" LIP CURB IS SHOWN IF ANCHOR UNIT IS NOT ADJACENT TO AN APPROACH SLAB.
-MEASURE GUARDRAIL HEIGHT FROM THE TOP OF ADJACENT SURFACE (SHOULDER, BERM, OR GUTTER).
-LAP JOINTS IN THE DIRECTION OF TRAFFIC FLOW.
-SEE SHEET 5 FOR POST SECTIONS 1 THRU 9.

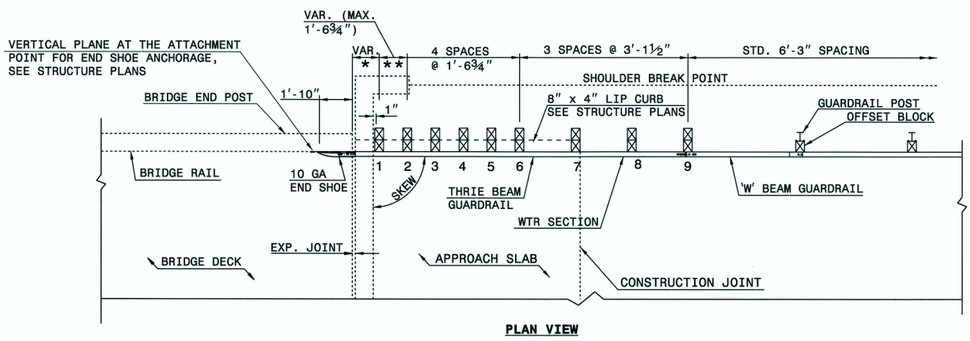

PLAN VIEW

GUARDRAIL ANCHOR UNIT, TYPE III FOR ATTACHMENT TO RAIL ON BRIDGE - SUB REGIONAL TIER

STATE OF NORTH CAROLINA
DEPT. OF TRANSPORTATION
DIVISION OF HIGHWAYS
RALEIGH, N.C.

ENGLISH DETAIL DRAWING FOR
STRUCTURE ANCHOR UNITS
GUARDRAIL ANCHOR UNIT, TYPE III FOR ATTACHMENT TO
RAIL ON BRIDGE - SUB REGIONAL TIER

SHEET 2 OF 7
862d03

STATE OF NORTH CAROLINA
DEPT. OF TRANSPORTATION
DIVISION OF HIGHWAYS
RALEIGH, N.C.

ENGLISH DETAIL DRAWING FOR
STRUCTURE ANCHOR UNITS
GUARDRAIL ANCHOR UNIT, TYPE III

SHEET 3 OF 7
862d03

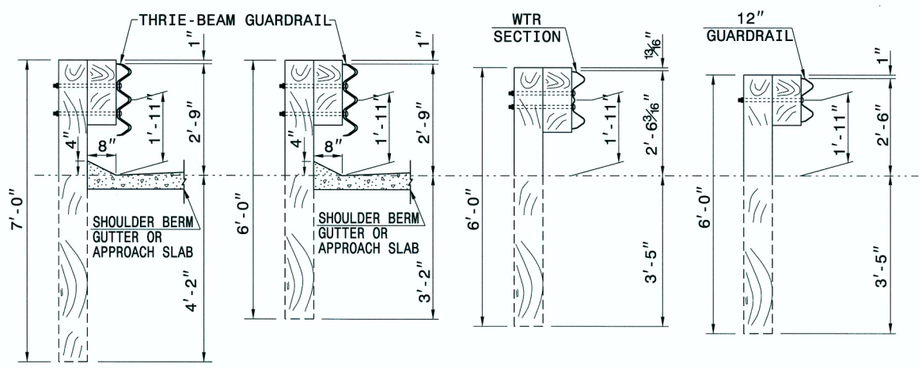

SECTION OF THRIE BEAM POSTS 1 THRU 6 | **SECTION OF THRIE BEAM POST 7** | **SECTION OF WTR BEAM POST 8** | **SECTION OF 'W' BEAM POST 9**

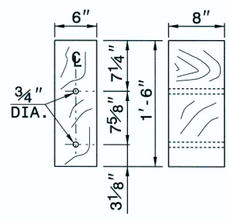

THRIE BEAM OFFSET BLOCK

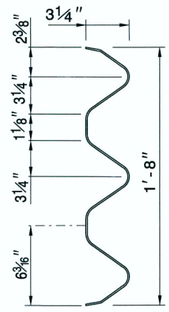

THRIE-BEAM SECTION

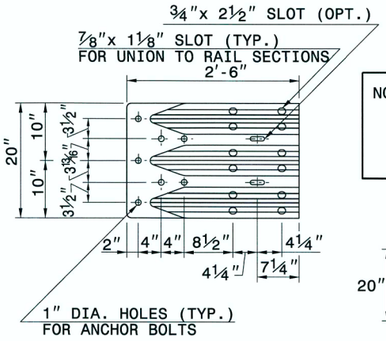

END SHOE

NOTE: THE MID POST AND OFFSET BLOCK OF THE WTR SECTION WILL REQUIRE SPECIAL BOLT HOLE DRILLING IN THE THRIE BEAM OFFSET BLOCK AND LINE POST.

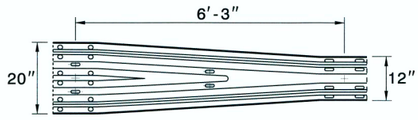

WTR SECTION
ELEVATION VIEW

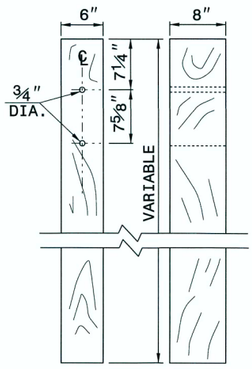

THRIE BEAM LINE POST

STATE OF NORTH CAROLINA
DEPT. OF TRANSPORTATION
DIVISION OF HIGHWAYS
RALEIGH, N.C.

ENGLISH DETAIL DRAWING FOR
STRUCTURE ANCHOR UNITS
GUARDRAIL ANCHOR UNIT, TYPE III

SHEET 3 OF 7
862d03

CONTRACT STANDARDS AND DEVELOPMENT UNIT
Office 919-707-6950 FAX 919-250-4119

SEE TITLE BLOCK

ORIGINAL BY: J. HOWERTON DATE: 06-22-12
MODIFIED BY: DATE:
CHECKED BY: DATE:
FILE SPEC.:

PROJECT REFERENCE NO. 17BP.5.R.35
SHEET NO. 2-A

COMPUTED BY: SLK	DATE: 3/07/13
CHECKED BY: GSP	DATE: 3/07/13

STATE OF NORTH CAROLINA
DIVISION OF HIGHWAYS

PROJECT REFERENCE NO.	SHEET NO.
17BP.5.R.35	3

SUMMARY OF EARTHWORK

STATION	STATION	UNCL. EXCAV.	EMBANK. +%	BORROW	WASTE
–L– 10+95.00	–L– 13+03.75	47	197	150	
SUBTOTALS:		47	197	150	
–L– 14+36.25	–L– 16+35.00	165	139		26
SUBTOTALS:		165	139	139	
PROJECT SUBTOTALS:		212	336	336	26
WASTE IN LIEU OF BORROW				–26	
PROJECT TOTALS:		212	336	310	
5% TO REPLACE TOPSOIL ON BORROW PIT				0	
GRAND TOTALS:		212	336	310	
SAY:		250		350	

Note: Approximate quantities only. Unclassified Excavation, Borrow Excavation, Shoulder Borrow, Fine Grading, Clearing and Grubbing, Breaking of Existing Pavement, and Removal of Existing Pavement will be paid for at the contract lump sum price for "Grading."

PAVEMENT REMOVAL SUMMARY

SURVEY LINE	STATION	STATION	LOCATION LT/RT/CL	YD^2
–L–	10+95.00	13+10.00	CL	519
–L–	14+30.00	16+35.00	CL	436
			TOTAL:	955
			SAY:	960

SHOULDER BERM GUTTER SUMMARY

SURVEY LINE	STATION	STATION	LENGTH
–L– RT.	14+47.25	14+88.00	40.75'
–L– LT.	14+47.25	14+88.00	40.75'
		TOTAL:	81.50'
		SAY:	82.00'

RIGHT OF WAY AREA DATA

PARCEL NO.	PROPERTY OWNERS NAMES	TOTAL ACREAGE	AREA TAKEN	AREA REMAINING RT.	AREA REMAINING LT.	CONST. EASE.	PERM. UTILITY EASE.	TEMP. DRAIN. EASE.
1	LARRY W. CURRIN		1502.63 SF				1283.69 SF	
2	ODELL I CURRIN HEIRS		2040.37 SF					
3	JESSE LILES BAKER HEIRS							
4	SAMMIE D. IPOCK & DONNA K. IPOCK		1797.00 SF					
5	LAMONT. M. INGE & DOLORES W. INGE		2851.82 SF					

SUB–REGIONAL & REGIONAL LIST OF PIPES, ENDWALLS, ETC. (FOR PIPES 48" & UNDER)

NOTE: Invert Elevations are for Bid Purposes only and shall not be used for project construction stakeout. See "Standard Specifications For Roads and Structures, Section 300–5".

STATION	LOCATION (LT,RT, OR CL)	STRUCTURE NO. FROM	STRUCTURE NO. TO	TOP ELEVATION	INVERT ELEVATION	INVERT ELEVATION	SLOPE CRITICAL	DRAINAGE PIPE (RCP or CSP) 12"	15"	18"	24"	30"	36"	42"	48"	DO NOT USE RCP	DO NOT USE CSP	DO NOT USE CAAP	DO NOT USE HDPE
–L– 14+83.00	RT.	0401		243.23															
		0401	0402		238.37	238.27													
–L– 14+83.00	LT.	0402		243.23															
		0402	0403		238.27	238.20			24'										
									24'										

STATION	C.S. PIPE 12" .064	15" .064	18" .064	24" .064	36" .079	42" .109	48" .109	R.C. PIPE (CLASS III) 15"	18"	24"	30"	36"	42"	48"	R.C. PIPE (CLASS IV) 12"	15"	18"	24"	30"	36"	42"	48"
–L– 14+83.00																						
																32'						
–L– 14+83.00																						
																32'						

STATION	**" R. C. PIPE (CLASS V)	**" R. C. PIPE CULVERTS, CONTRACTOR DESIGN PIPE	**" R. C. PIPE CULVERTS, CONTRACTOR DESIGN PIPE	15" SIDE DRAIN PIPE	18" SIDE DRAIN PIPE	ENDWALLS STD. 838.01, STD. 838.11 OR STD. 838.80 (UNLESS NOTED OTHERWISE) CU. YDS. R.C.P.	C.S.P.	QUANTITIES FOR DRAINAGE STRUCTURES PER EACH (0' THRU 5.0')	* TOTAL L.F. FOR PAY QUANTITY SHALL BE COL. 'A' + (1.3 X COL.'B') LIN. *FT. A 5.0' THRU 10.0'	B 10.0' AND ABOVE	C.B. STD. 840.01 OR STD. 840.02	FRAME, GRATES AND HOOD STANDARD 840.03 TYPE OF GRATE E	F	G		CONCRETE TRANSITIONAL SECTION CATCH BASIN	DROP INLET	G.D.I. TYPE "B" STD. 840.18 OR 840.27	G.D.I. (N.S.) FRAME WITH TWO GRATES STD. 840.24	T.B.D.I. STD. 840.35	G.D.I. (N.S.) FRAME WITH TWO GRATES STD. 840.29	M.H. FRAME & COVER STD. 840.54	T.B.J.B. STD. 840.34	CORR. STEEL ELBOWS NO. & SIZE	CONC. COLLARS CL. "B" C.Y. STD 840.72	CONC. & BRICK PIPE PLUG, C.Y. STD. 840.71	PIPE REMOVAL LIN.FT.	REMARKS
–L– 14+83.00								1												1	1							
–L– 14+83.00								1												1	1							
								2												2	2							

ABBREVIATIONS

C.B.	CATCH BASIN
N.D.I.	NARROW DROP INLET
D.I.	DROP INLET
G.D.I.	GRATED DROP INLET
G.D.I. (N.S.)	GRATED DROP INLET (NARROW SLOT)
J.B.	JUNCTION BOX
M.H.	MANHOLE
T.B.D.I.	TRAFFIC BEARING DROP INLET
T.B.J.B.	TRAFFIC BEARING JUNCTION BOX

"N" = DISTANCE FROM EDGE OF LANE TO FACE OF GUARDRAIL.
TOTAL SHOULDER WIDTH = DISTANCE FROM EDGE OF TRAVEL LANE TO SHOULDER BREAK POINT.
FLARE LENGTH = DISTANCE FROM LAST SECTION OF PARALLEL GUARDRAIL TO END OF GUARDRAIL.
W = TOTAL WIDTH OF FLARE FROM BEGINNING OF TAPER TO END OF GUARDRAIL.
G = GATING IMPACT ATTENUATOR TYPE 350
NG = NON–GATING IMPACT ATTENUATOR TYPE 350

GUARDRAIL SUMMARY

SURVEY LINE	BEG. STA.	END STA.	LOCATION	LENGTH STRAIGHT	LENGTH SHOP CURVED	LENGTH DOUBLE FACED	WARRANT POINT APPROACH END	WARRANT POINT TRAILING END	"N" DIST. FROM E.O.L.	TOTAL SHOUL. WIDTH	FLARE LENGTH APPROACH END	FLARE LENGTH TRAILING END	W APPROACH END	W TRAILING END	ANCHORS XI MOD	TYPE III	GRAU 350	M–350	B–77	CAT–1	VI MOD	BIC	AT–1	IMPACT ATTENUATOR TYPE 350 EA	G	NG	SINGLE FACED GUARDRAIL	REMOVE EXISTING GUARDRAIL	REMOVE AND STOCKPILE EXISTING GUARDRAIL	REMARKS
–L–	12+22.50	13+03.75	LT.	81.25'				13+03.75	6'–0"	9'–0"		50'–0"		1'–0"		1	1													
–L–	12+22.50	13+03.75	RT.	81.25'			13+03.75		6'–0"	9'–0"	50'–0"		1'–0"			1	1													
–L–	15+42.50	14+36.25	LT.	106.25'			15+42.50		6'–0"	9'–0"	50'–0"		1'–0"			1	1													
–L–	15+42.50	14+36.25	RT.	106.25'				15+42.50	6'–0"	9'–0"		50'–0"		1'–0"		1	1													
			PROJECT SUBTOTAL	375.00												4	4													
		LESS ANCHOR DEDUCTIONS		(–)275.00'																										
			PROJECT TOTAL	100.00'												GUARDRAIL ANCHOR DEDUCTIONS														
																TYPE III = 4 @ 18.75' = 75'														
			SAY	100.00'												GRAU 350 = 4 @ 50' = 200'														
						ADDITIONAL GUARDRAIL POSTS = 5 EACH										TOTAL DEDUCTIONS = 275'														

$$$$$$SYSTIME$$$$$$
$$$$$$$$$$DGN$$$$$$$$$$$$$$$$$$$$$$$$$$$$
$$$$USERNAME$$$$

PROJECT REFERENCE NO.	SHEET NO.
17BP.5.R.35	4
R/W SHEET NO.	

ROADWAY DESIGN ENGINEER — NORTH CAROLINA PROFESSIONAL SEAL 022999 ENGINEER GREG S PURVIS — 12/16/13

HYDRAULICS ENGINEER — NORTH CAROLINA PROFESSIONAL SEAL 18402 ENGINEER JAMES C DAVIS — 12/16/13

WETHERILL ENGINEERING
559 Jones Franklin Rd. Suite 164
Raleigh, N.C. 27606
License No. F-0377
Bus: 919 851 8077
Fax: 919 851 8107
TRANSPORTATION PLANNING/DESIGN - BRIDGE/STRUCTURE DESIGN
CIVIL/SITE DESIGN - GIS/GPS - CONSTRUCTION OBSERVATION

NOTES:

1.) ONLY ONE TEMPORARY WORK PAD SHALL BE INSTALLED AND IN USE AT A TIME.
2.) TEMPORARY IN-STREAM WORK PADS TO PROVIDE ACCESS DURING CONSTRUCTION TO INTERIOR PILES.
3.) CLASS II RIP-RAP TO BE RETAINED ON STREAMBANK TO PROVIDE PERMANENT STABILITY.

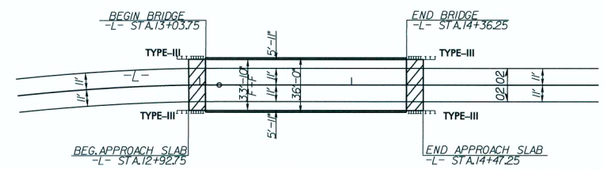

SKETCH SHOWING BRIDGE/PAVEMENT RELATIONSHIP

DATUM DESCRIPTION

THE LOCALIZED COORDINATE SYSTEM DEVELOPED FOR THIS PROJECT IS BASED ON THE STATE PLANE COORDINATES ESTABLISHED BY NCDOT FOR MONUMENT "91-0201-1"
WITH NAD 83/NSRS 2007 STATE PLANE GRID COORDINATES OF
NORTHING: 756216.579(ft) EASTING: 2191262.281(ft)
ELEVATION: 271.839(ft)
THE AVERAGE COMBINED GRID FACTOR USED ON THIS PROJECT (GROUND TO GRID) IS: 0.999915145
THE N.C. LAMBERT GRID BEARING AND LOCALIZED HORIZONTAL GROUND DISTANCE FROM "91-0201-1" TO -L- STATION 10+00.00 IS N 33° 27' 13" E 538.20'
ALL LINEAR DIMENSIONS ARE LOCALIZED HORIZONTAL DISTANCES
VERTICAL DATUM USED IS NAVD 88

PI Sta 10+24.13
△ = 3° 56' 53.1" (RT)
D = 8° 11' 31.5"
L = 48.19'
T = 24.13'
R = 700.00'

PI Sta 12+15.29
△ = 8° 49' 09.8" (RT)
D = 4° 30' 45.5"
L = 195.44'
T = 97.94'
R = 1,270.00'

BL-1=N 756216.58, E 2191262.28, ELEV. 271.84'
BL-2=N 755628.31, E 2190720.19, ELEV. 262.71'
BL-3=N 756893.69, E 2191693.71, ELEV. 242.78'
BL-4=N 757218.70, E 2192027.36, ELEV. 242.26'

NAD 83/NSRS 2007

PI Sta 16+45.12
△ = 5° 33' 57.9" (RT)
D = 3° 22' 15.0"
L = 165.12'
T = 82.64'
R = 1,700.00'

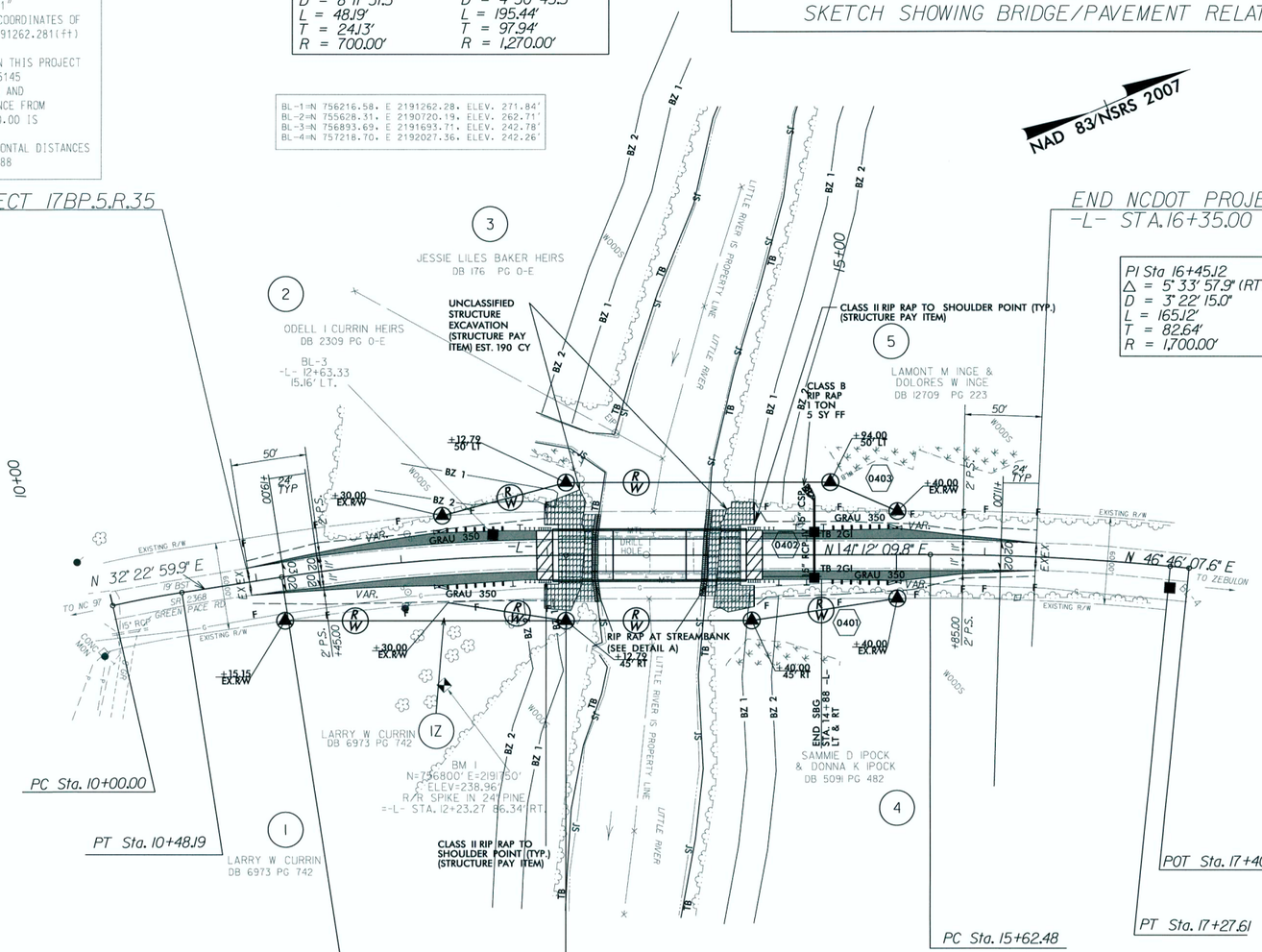

PARCEL INDEX	
PARCEL NO.	PROPERTY OWNER NAME
1	LARRY W. CURRIN
2	ODELL I CURRIN HEIRS
3	JESSE LILES BAKER HEIRS
4	SAMMIE D. & DONNA K. IPOCK
5	LAMONT M. & DOLORES W. INGE

DETAIL A
RIP RAP AT STREAMBANK
(Not to Scale)

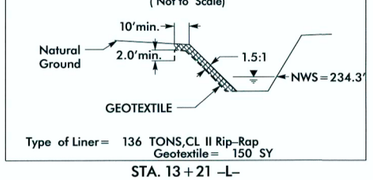

Type of Liner= 136 TONS,CL II Rip-Rap
Geotextile= 150 SY

STA. 13+21 -L-
STA. 14+20 -L-

SEE SHEET 5 FOR -L- PROFILE
SEE SHEET S-1 THRU S-19 FOR STRUCTURE PLANS

PROJECT: 17BP.5.R.35
COUNTY: WAKE
STATION: 13+70.00 -L- (90 SKEW)
REPLACE BRIDGE NO. 201
OVER LITTLE RIVER
ON SR 2363 (GREEN PACE ROAD)

REVISIONS

8/17/99

3:09:24 PM
12/12/2013
Wake #201\Roadway\Proj\BR#201_Rdy_psh4.dgn

PROJECT REFERENCE NO.	SHEET NO.
17BP.5.R.35	5

ROADWAY DESIGN ENGINEER

NORTH CAROLINA PROFESSIONAL SEAL 022999 ENGINEER GREG S. PURVIS

12/16/13

HYDRAULICS ENGINEER

NORTH CAROLINA PROFESSIONAL SEAL 18462 ENGINEER JAMES C. DAVIS

12/16/13

WETHERILL ENGINEERING
559 Jones Franklin Rd. Suite 164
Raleigh, N.C. 27606
License No. F-0377
Bus: 919 851 8077
Fax: 919 851 8107

TRANSPORTATION PLANNING/DESIGN - BRIDGE/STRUCTURE DESIGN
CIVIL/SITE DESIGN - GIS/GPS - CONSTRUCTION OBSERVATION

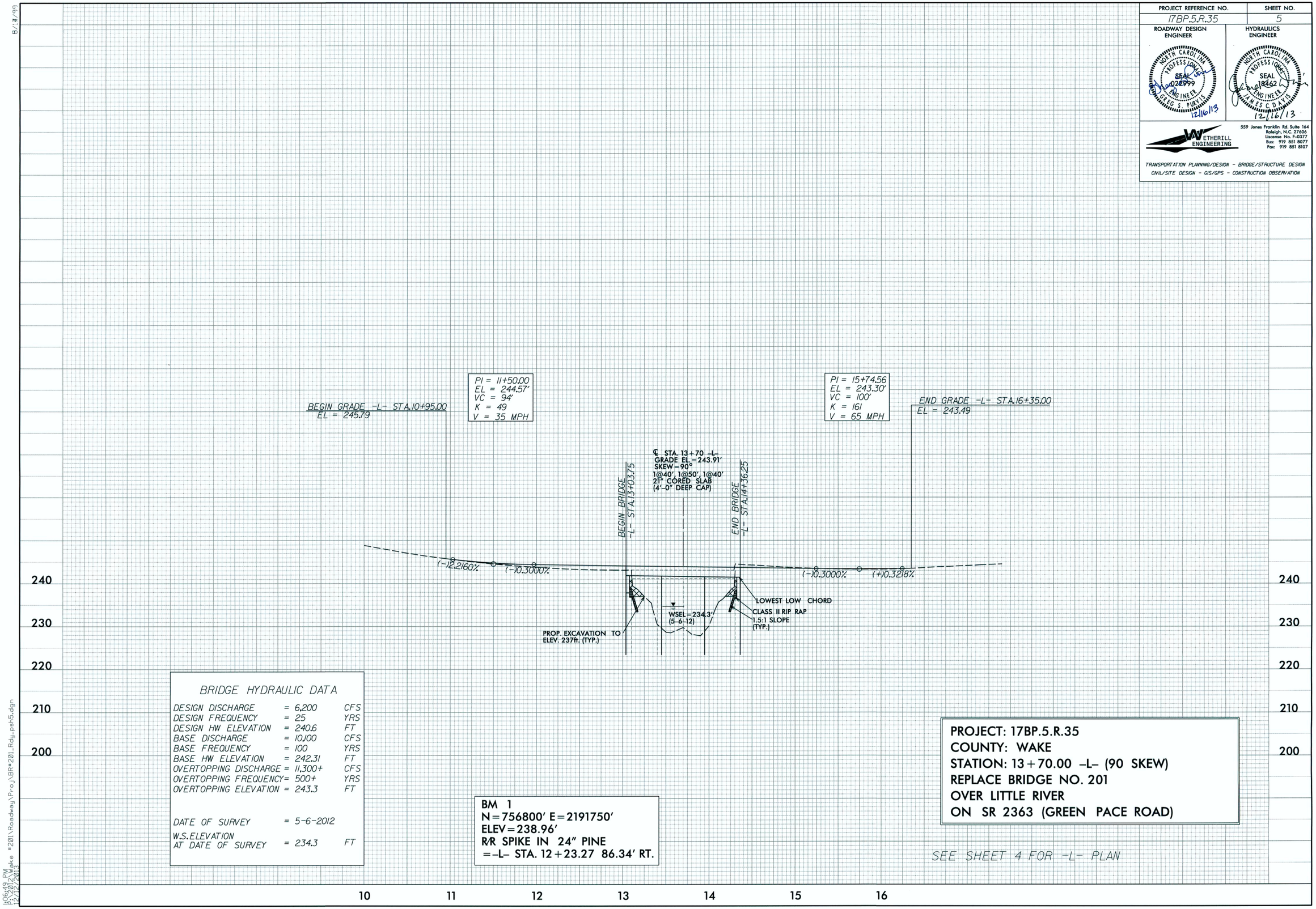

BRIDGE HYDRAULIC DATA

DESIGN DISCHARGE	= 6,200	CFS
DESIGN FREQUENCY	= 25	YRS
DESIGN HW ELEVATION	= 240.6	FT
BASE DISCHARGE	= 10,100	CFS
BASE FREQUENCY	= 100	YRS
BASE HW ELEVATION	= 242.31	FT
OVERTOPPING DISCHARGE	= 11,300+	CFS
OVERTOPPING FREQUENCY	= 500+	YRS
OVERTOPPING ELEVATION	= 243.3	FT
DATE OF SURVEY	= 5-6-2012	
W.S.ELEVATION AT DATE OF SURVEY	= 234.3	FT

BM 1
N=756800' E=2191750'
ELEV=238.96'
R/R SPIKE IN 24" PINE
=-L- STA. 12+23.27 86.34' RT.

PROJECT: 17BP.5.R.35
COUNTY: WAKE
STATION: 13+70.00 -L- (90 SKEW)
REPLACE BRIDGE NO. 201
OVER LITTLE RIVER
ON SR 2363 (GREEN PACE ROAD)

SEE SHEET 4 FOR -L- PLAN

8/1/96
H06:49 PM
12/19/2012
Wake #201\Roadway\Proj\BR#201_Rdy.psh5.dgn

PROJ. REFERENCE NO.	SHEET NO.
17BP.5.R.35	TCP-1

TRAFFIC CONTROL PLAN

GENERAL NOTES

CHANGES MAY BE REQUIRED WHEN PHYSICAL DIMENSIONS IN THE DETAIL DRAWINGS, STANDARD DETAILS, AND ROADWAY DETAILS ARE NOT ATTAINABLE TO MEET FIELD CONDITIONS OR RESULT IN DUPLICATE OR UNDESIRED OVERLAPPING OF DEVICES. MODIFICATION MAY INCLUDE: MOVING, SUPPLEMENTING, COVERING, OR REMOVAL OF DEVICES AS DIRECTED BY THE ENGINEER.

THE FOLLOWING GENERAL NOTES APPLY AT ALL TIMES FOR THE DURATION OF THE CONSTRUCTION PROJECT EXCEPT WHEN OTHERWISE NOTED IN THE PLAN OR AS DIRECTED BY THE ENGINEER.

A) WHEN PERSONNEL AND/OR EQUIPMENT ARE WORKING WITHIN 15 FT OF AN OPEN TRAVEL LANE, CLOSE THE NEAREST OPEN SHOULDER USING ROADWAY STANDARD DRAWING NO. 1101.04 UNLESS THE WORK AREA IS PROTECTED BY BARRIER OR GUARDRAIL OR A LANE CLOSURE IS INSTALLED.

B) NOTIFY THE ENGINEER THIRTY (30) CALENDAR DAYS PRIOR TO ANY TRAFFIC PATTERN ALTERATION.

C) PROVIDE SIGNING AND DEVICES REQUIRED TO CLOSE THE ROAD ACCORDING TO THE ROADWAY STANDARD DRAWINGS AND TRAFFIC CONTROL PLANS.

PROVIDE SIGNING REQUIRED FOR THE OFF-SITE DETOUR ROUTE AS SHOWN IN THE TRAFFIC CONTROL PLANS.

D) COVER OR REMOVE ALL SIGNS AND DEVICES REQUIRED TO CLOSE THE ROAD WHEN ROAD CLOSURE IS NOT IN OPERATION.

COVER OR REMOVE ALL SIGNS REQUIRED FOR THE OFF-SITE DETOUR WHEN THE DETOUR IS NOT IN OPERATION.

E) ENSURE ALL NECESSARY SIGNING IS IN PLACE PRIOR TO ALTERING ANY TRAFFIC PATTERN.

F) PLACE TYPE III BARRICADES, WITH "ROAD CLOSED" SIGN R11-2 ATTACHED, OF SUFFICIENT LENGTH TO CLOSE ENTIRE ROADWAY.

G) INSTALL PAVEMENT MARKINGS AND PAVEMENT MARKERS ON THE FINAL SURFACE ACCORDING TO THE ROADWAY STANDARD DRAWINGS.

H) INSTALL PAVEMENT MARKINGS AND PAVEMENT MARKERS ON THE FINAL SURFACE AS FOLLOWS:

ROAD NAME	MARKING	MARKER
SR 2368 (GREEN PACE RD.)	THERMOPLASTIC	N/A

I) TIE PROPOSED PAVEMENT MARKING LINES TO EXISTING PAVEMENT MARKING LINES.

J) MAINTAIN ACCESS TO ALL RESIDENCES AND BUSINESSES BETWEEEN THE CLOSURE POINTS AT ALL TIMES DURING CONSTRUCTION.

NCDOT ROADWAY STANDARD DRAWINGS

THE FOLLOWING ROADWAY STANDARDS AS SHOWN IN "ROADWAY STANDARD DRAWINGS" - PROJECT SERVICES UNIT - N.C. DEPARTMENT OF TRANSPORTATION - RALEIGH, N.C., DATED JANUARY 2012 ARE APPLICABLE TO THIS PROJECT AND BY REFERENCE HEREBY ARE CONSIDERED A PART OF THESE PLANS:

STD. NO.	TITLE
1101.03	TEMPORARY ROAD CLOSURES
1101.04	TEMPORARY SHOULDER CLOSURES
1110.01	STATIONARY WORK ZONE SIGNS
1110.02	PORTABLE WORK ZONE SIGNS
1135.01	CONES
1145.01	BARRICADES
1205.01	PAVEMENT MARKINGS - LINE TYPES & OFFSETS
1205.02	PAVEMENT MARKINGS - 2 LANE & MULTILANE ROADWAYS
1205.12	PAVEMENT MARKINGS - BRIDGES
1261.01	GUARDRAIL & BARRIER DELINEATOR SPACING
1261.02	GUARDRAIL & BARRIER DELINEATOR TYPES
1262.01	GUARDRAIL END DELINEATION

INDEX OF SHEETS

TCP-1	GENERAL NOTES, ROADWAY STANDARD DRAWINGS, INDEX OF SHEETS, PHASING, AND PAVEMENT MARKING SCHEDULE.
TCP-2	GREEN PACE ROAD OFF-SITE DETOUR ROUTE, TRAFFIC CONTROL TEMPORARY SIGNS AND DEVICES.
TCP-3	GREEN PACE ROAD SIGN DESIGN

PHASING

STEP 1. USING ROADWAY STANDARD DRAWING 1101.04, SHT. 1 OF 1, INSTALL AND COVER DETOUR SIGNING.

INSTALL CHANGEABLE MESSAGE SIGNS FOR 7-DAY COUNTDOWN TO ROAD CLOSURE AT DETOUR POINTS AS SHOWN ON TCP-2.

STEP 2. USING ROADWAY STANDARD DRAWING 1101.03, SHT. 1 OF 9, UNCOVER OFF-SITE DETOUR SIGNING AND INSTALL TYPE BARRICADES TO CLOSE GREEN PACE ROAD TO THRU TRAFFIC.

STEP 3. PERFORM PROPOSED BRIDGE AND ROADWAY CONSTRUCTION. PLACE PAVEMENT MARKINGS.

STEP 4. REMOVE TYPE III BARRICADES FROM GREEN PACE ROAD AND REOPEN ROADWAY TO TRAFFIC. REMOVE ALL DETOUR SIGNING.

FINAL PAVEMENT MARKING SCHEDULE

SYMBOL	DESCRIPTION	PAY ITEM QUANTITY BREAKDOWN	TOTAL QUANTITY
		PAVEMENT MARKINGS	
		THERMOPLASTIC (4", 90 MILS)	
TA	WHITE EDGELINE	1080 LF	
		THERMOPLASTIC (4", 120 MILS)	
TI	YELLOW DOUBLE CENTER	1080 LF	
			TOTAL 2160 LF

WETHERILL ENGINEERING
559 Jones Franklin Rd. Suite 164
Raleigh, N.C. 27606
Bus: 919 851 8077
Fax: 919 851 8107
License No. F-0377
TRANSPORTATION PLANNING/DESIGN - BRIDGE/STRUCTURE DESIGN
CIVIL/SITE DESIGN - GIS/GPS - CONSTRUCTION OBSERVATION

APPROVED: DATE: 12/16/13

SEAL

NORTH CAROLINA PROFESSIONAL SEAL 022999 ENGINEER GREG S. PURVIS 12/16/13

DIVISION OF HIGHWAYS STATE OF NORTH CAROLINA DEPARTMENT OF TRANSPORTATION WORK ZONE TRAFFIC CONTROL

GENERAL NOTES, ROADWAY STANDARD DRAWINGS, PHASING, INDEX OF SHEETS, PAVEMENT MARKING SCHEDULE

3/18/2013
7:29:07 AM
P:\2012\Wake #20\Traffic\TrafficControl\TCP\Br #20_TCP_TCP_1.dgn

PROJ. REFERENCE NO.	SHEET NO.
17BP.5.R.35	TCP-2

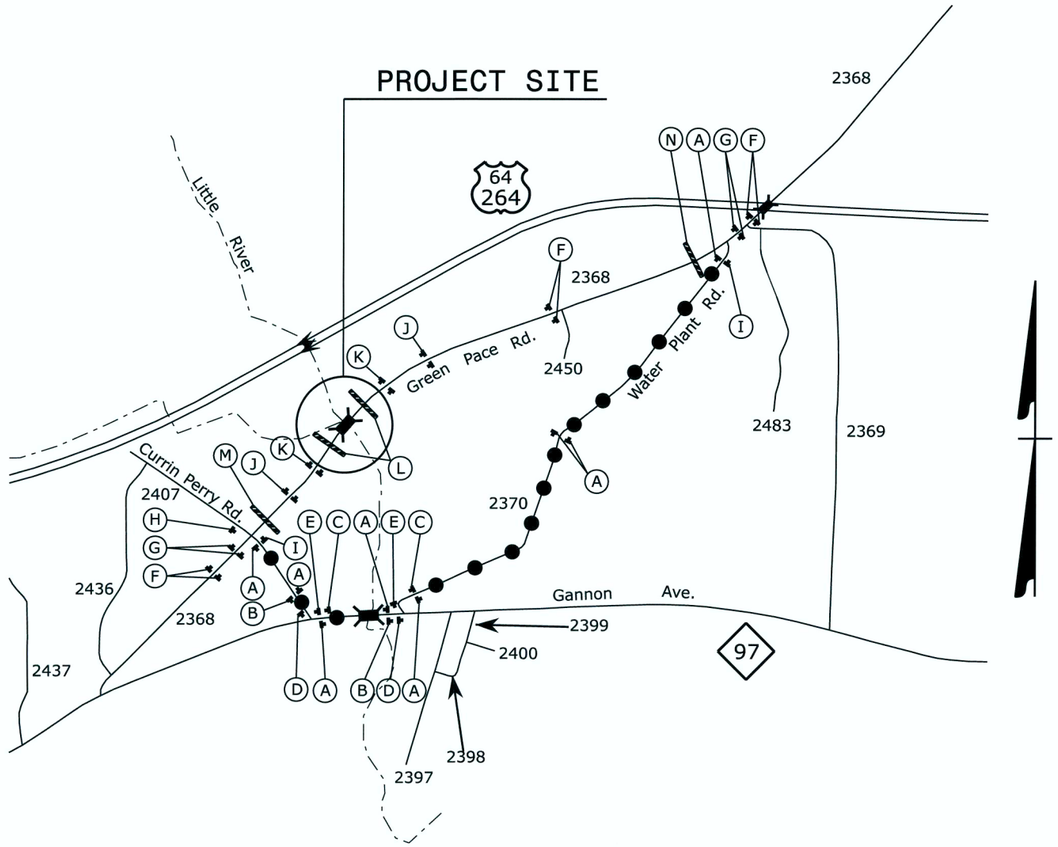

TRAFFIC CONTROL TEMPORARY SIGNING AND DEVICES

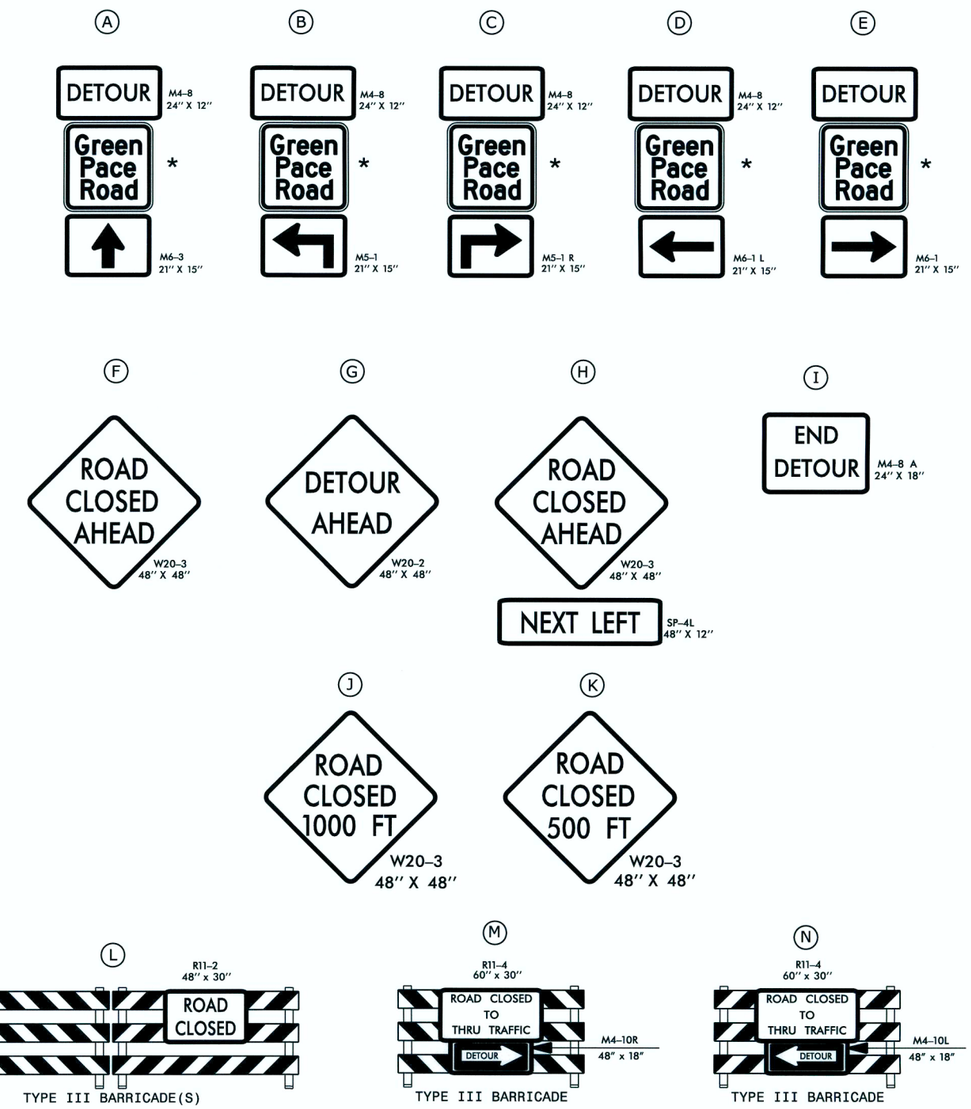

NOTES: REFER TO ROADWAY STANDARD DRAWING NO. 1101.03, SHT. 1 OF 9, FOR ADDITIONAL SIGN SPACING REQUIREMENTS.

* REFER TO TCP-3 FOR TEMPORARY GREEN PACE ROAD SIGN DESIGN.

LEGEND

- NORTH ARROW
- TYPE III BARRICADE
- STATIONARY SIGN
- OFF-SITE DETOUR

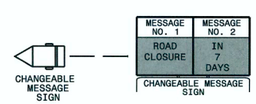

USE CHANGEABLE MESSAGE SIGNS FOR A 7-DAY COUNTDOWN ROAD CLOSURE NOTICE PRIOR TO CLOSING GREEN PACE RD. TO THRU TRAFFIC.

INSTALL CHANGEABLE MESSAGE SIGNS AT THE DETOUR POINTS AND AS DIRECTED BY THE ENGINEER.

WETHERILL ENGINEERING
559 Jones Franklin Rd. Suite 164
Raleigh, N.C. 27606
Bus: 919 851 8077
Fax: 919 851 8107
License No. F-0377
TRANSPORTATION PLANNING/DESIGN - BRIDGE/STRUCTURE DESIGN
CIVIL/SITE DESIGN - GIS/GPS - CONSTRUCTION OBSERVATION

APPROVED: DATE: 12/16/13

SEAL

NORTH CAROLINA PROFESSIONAL SEAL 022999 ENGINEER GREG S. PURVIS 12/16/13

DIVISION OF HIGHWAYS STATE OF NORTH CAROLINA DEPARTMENT OF TRANSPORTATION WORK ZONE TRAFFIC CONTROL

GREEN PACE ROAD OFF-SITE DETOUR

3/18/2013
7:30:32 AM
P:\2012\Wake #20L\Traffic\TrafficControl\TCP\Br #20L_TCP_TCP_2.dgn

PROJ. REFERENCE NO.	SHEET NO.
17BP.5.R.35	TCP-3

SIGN NUMBER: TEMPORARY
TYPE: D
QUANTITY: SEE PLANS

BACKG COLOR: Fluorescent Orange
COPY COLOR: Color 239

SYMBOL	X	Y	WID	HT

MAT'L: 0.080" (2.0 mm) ALUMINUM

SIGN WIDTH: 1'-6"
HEIGHT: 1'-6"
TOTAL AREA: 2.3 Sq.Ft.

BORDER TYPE: INSET
RECESS: 0.47"
WIDTH: 0.63"
RADII: 1.5"

NO. Z BARS:
LENGTH:

DESIGN BY: CLM
PROJECT ID: 17BP.5.R.35

CHECKED BY: BAM
DIV: 5

DATE: May 16, 2012

USE NOTES: 1,2

1. Legend and border shall be direct applied black non-reflective sheeting.
2. Background shall be NC GRADE B fluoresent orange retroreflective sheeting.

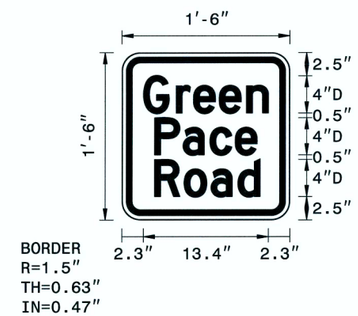

Spacing Factor is 1 unless specified otherwise

LETTER POSITIONS

Letter widths are shown

					Series/Size Text Length
G	r	e	e	n	D 2000
2.7	1.5	2.4	2.4	2.4	13.4
P	a	c	e		D 2000
2.7	2.3	2.4	2.4		11
R	o	a	d		D 2000
2.7	2.4	2.3	2.4		11.3

FILENAME: Guidesign6

NORTH CAROLINA D.O.T. SIGN DETAIL

NOTE: TO BE PAID FOR UNDER "STATIONARY WORK ZONE SIGNS"

WETHERILL ENGINEERING
559 Jones Franklin Rd. Suite 164
Raleigh, N.C. 27606
Bus: 919 851 8077
Fax: 919 851 8107
License No. F-0377
TRANSPORTATION PLANNING/DESIGN - BRIDGE/STRUCTURE DESIGN
CIVIL/SITE DESIGN - GIS/GPS - CONSTRUCTION OBSERVATION

APPROVED: DATE: 12/16/13

SEAL

NORTH CAROLINA PROFESSIONAL SEAL 022999 ENGINEER GREG S. PURVIS 12/16/13

DIVISION OF HIGHWAYS STATE OF NORTH CAROLINA DEPARTMENT OF TRANSPORTATION WORK ZONE TRAFFIC CONTROL

SIGN DESIGN

3/18/2013
7:31:43 AM
P:\2012\Wake #20L\Traffic\TrafficControl\TCP\Br #20L_TCP_TCP_3.dgn

PROJECT REFERENCE NO.	SHEET NO.
17BP.5.R.35	EC 1/CONST.4
R/W SHEET NO.	

EROSION CONTROL PLAN

THESE EROSION AND SEDIMENT CONTROL PLANS COMPLY WITH THE REGULATIONS SET FORTH BY THE NCG-010000 GENERAL CONSTRUCTION PERMIT EFFECTIVE AUGUST 3, 2011 ISSUED BY THE NORTH CAROLINA DEPARTMENT OF ENVIRONMENT AND NATURAL RESOURCES DIVISION OF WATER QUALITY.

NOTES: ANY DEVIATION FROM OPTIONS GIVEN WILL REQUIRE PRIOR APPROVAL BY ENGINEER.

ADDITIONAL EROSION CONTROL DEVICES MAY NEED TO BE INSTALLED AS DIRECTED BY THE ENGINEER.

NOTES:

1.) ONLY ONE TEMPORARY WORK PAD SHALL BE INSTALLED AND IN USE AT A TIME.
2.) TEMPORARY IN-STREAM WORK PADS TO PROVIDE ACCESS DURING CONSTRUCTION TO INTERIOR PILES.
3.) CLASS II RIP-RAP TO BE RETAINED ON STREAMBANK TO PROVIDE PERMANENT STABILITY.

ENVIRONMENTALLY SENSITIVE AREA
SEE PROJECT SPECIAL PROVISIONS

NOTE:
PERIMETER EROSION CONTROL MEASURES SHALL BE INSTALLED DURING CLEARING AND GRUBBING PHASE.

CLEARING AND GRUBBING EROSION CONTROL FOR CONSTRUCTION SHEET 4

WETHERILL ENGINEERING
559 Jones Franklin Rd. Suite 164
Raleigh, N.C. 27606
License No. F-0377
Bus: 919 851 8077
Fax: 919 851 8107
TRANSPORTATION PLANNING/DESIGN - BRIDGE/STRUCTURE DESIGN
CIVIL/SITE DESIGN - GIS/GPS - CONSTRUCTION OBSERVATION

JAMES C. DAVIS
LEVEL IIIA NAME

633
LEVEL IIIA CERTIFICATION NO.

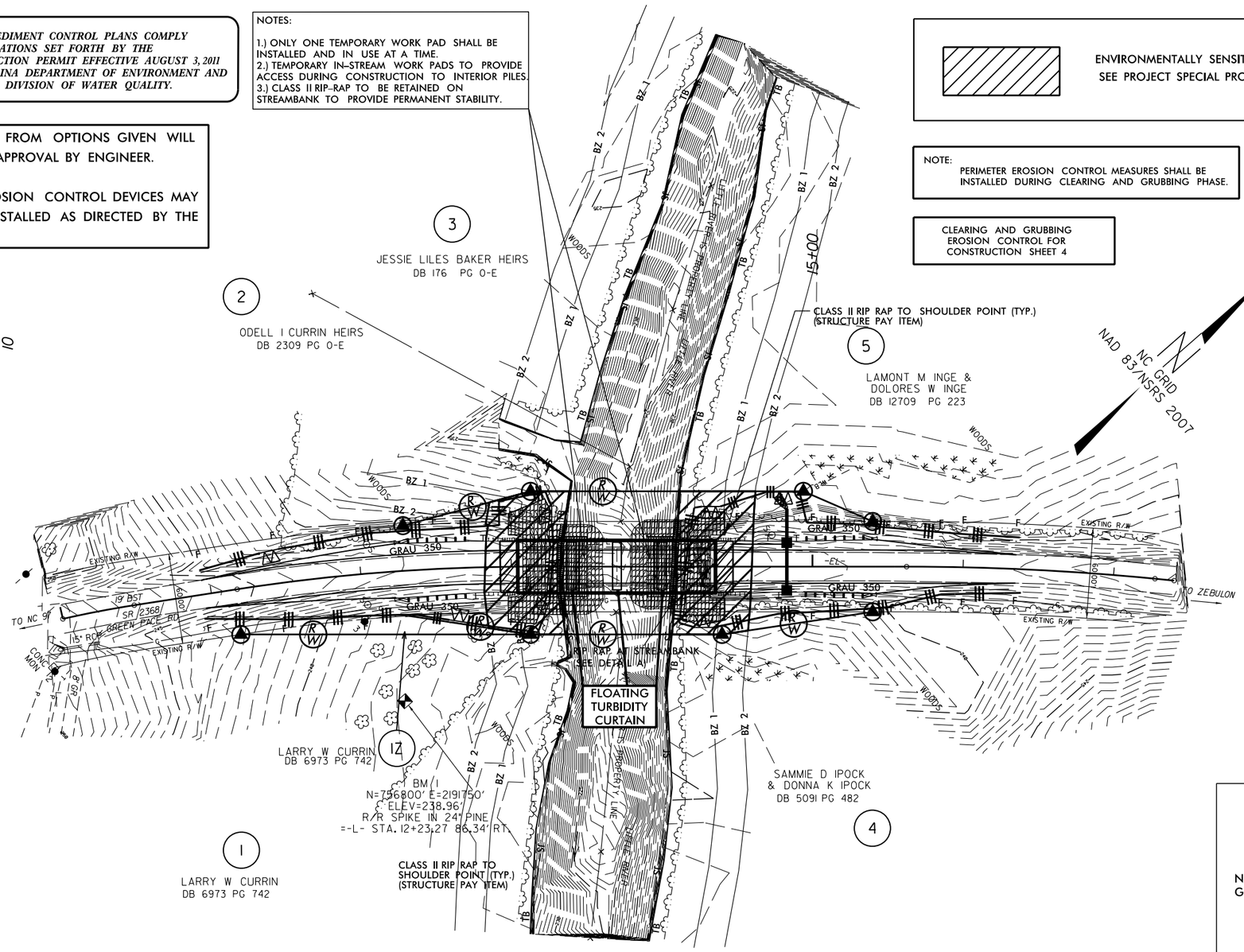

TYPICAL SECTION
RIP RAP WORK PAD
NOT TO SCALE

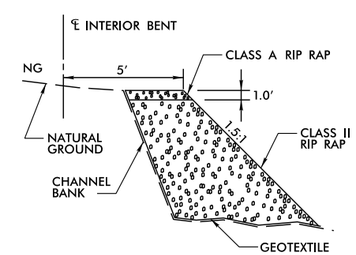

DETAIL A
RIP RAP AT STREAMBANK
(Not to Scale)

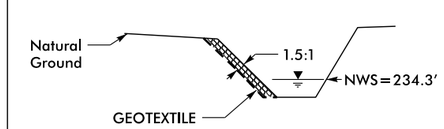

Type of Liner=136 TONS,CL II Rip-Rap
Geotextile= 150 SY

STA. 13+21 -L-
STA. 14+20 -L-

2012 STANDARD DRAWINGS

1604.01	Railroad Erosion Control Detail
1605.01	Temporary Silt Fence
1606.01	Special Sediment Control Fence
1607.01	Gravel Construction Entrance
1622.01	Temporary Berms and Slope Drains
1630.01	Riser Basin
1630.02	Silt Basin Type B
1630.03	Temporary Silt Ditch
1630.04	Stilling Basin
1630.05	Temporary Diversion
1630.06	Special Stilling Basin
1631.01	Matting Installation
1632.01	Rock Inlet Sediment Trap Type A
1632.02	Rock Inlet Sediment Trap Type B
1632.03	Rock Inlet Sediment Trap Type C
1633.01	Temporary Rock Silt Check Type A
1633.02	Temporary Rock Silt Check Type B
1634.01	Temporary Rock Sediment Dam Type A
1634.02	Temporary Rock Sediment Dam Type B
1635.01	Rock Pipe Inlet Sediment Trap Type A
1635.02	Rock Pipe Inlet Sediment Trap Type B
1640.01	Coir Fiber Baffle
1645.01	Temporary Stream Crossing

ROADSIDE ENVIRONMENTAL UNIT
DEPARTMENT OF TRANSPORTATION
DIVISION OF HIGHWAYS
RALEIGH, N.C.

2012 STANDARD SPECIFICATIONS

Std. #	Description	Symbol
1605.01	Temporary Silt Fence	
1606.01	Special Sediment Control Fence	

PROJECT REFERENCE NO.	SHEET NO.
17BP.5.R.35	EC 2/CONST.4
R/W SHEET NO.	

EROSION CONTROL PLAN

THESE EROSION AND SEDIMENT CONTROL PLANS COMPLY WITH THE REGULATIONS SET FORTH BY THE NCG-010000 GENERAL CONSTRUCTION PERMIT EFFECTIVE AUGUST 3, 2011 ISSUED BY THE NORTH CAROLINA DEPARTMENT OF ENVIRONMENT AND NATURAL RESOURCES DIVISION OF WATER QUALITY.

NOTES: ANY DEVIATION FROM OPTIONS GIVEN WILL REQUIRE PRIOR APPROVAL BY ENGINEER.

ADDITIONAL EROSION CONTROL DEVICES MAY NEED TO BE INSTALLED AS DIRECTED BY THE ENGINEER.

NOTES:

1.) ONLY ONE TEMPORARY WORK PAD SHALL BE INSTALLED AND IN USE AT A TIME.
2.) TEMPORARY IN-STREAM WORK PADS TO PROVIDE ACCESS DURING CONSTRUCTION TO INTERIOR PILES.
3.) CLASS II RIP-RAP TO BE RETAINED ON STREAMBANK TO PROVIDE PERMANENT STABILITY.

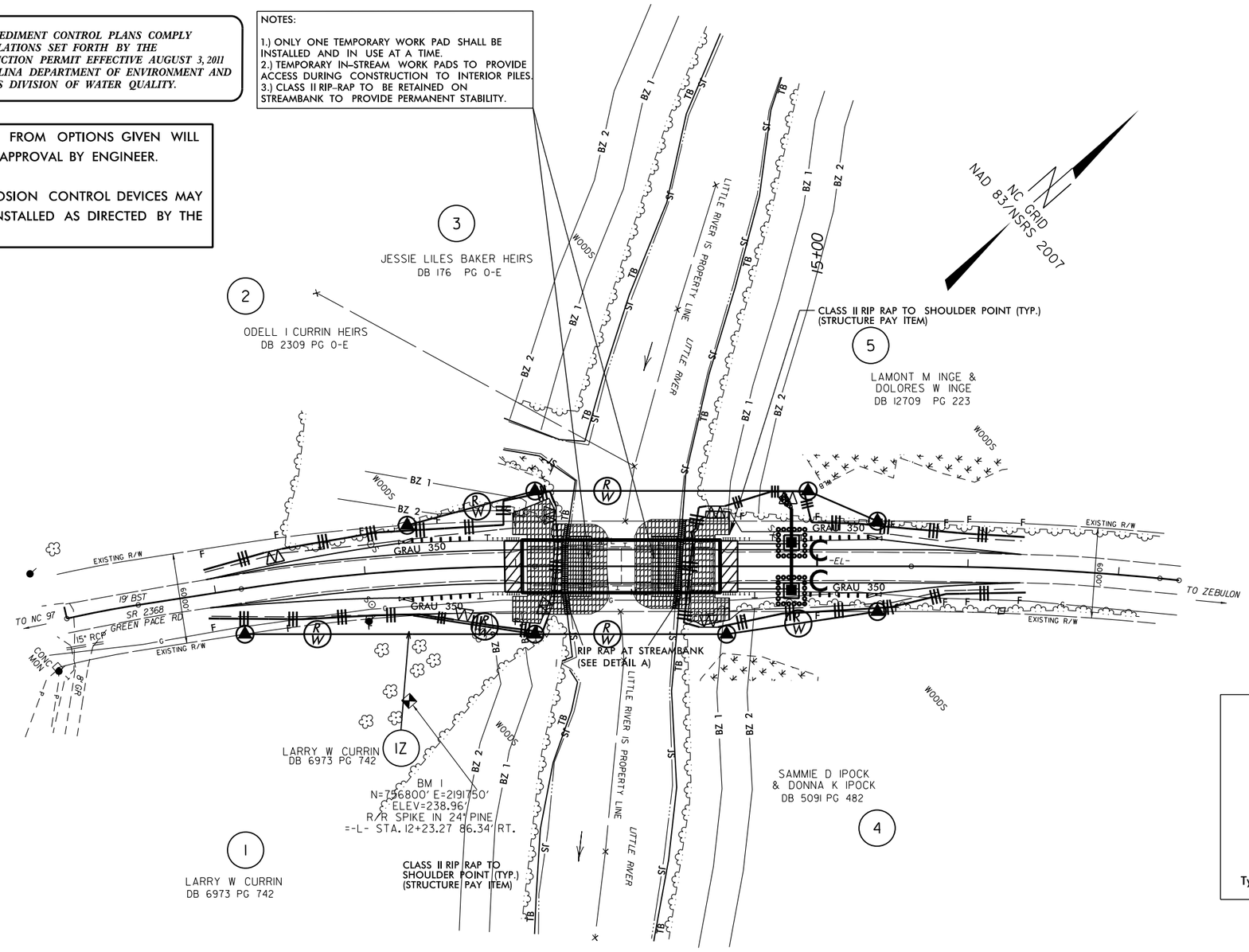

WETHERILL ENGINEERING
559 Jones Franklin Rd. Suite 164
Raleigh, N.C. 27606
License No. F-0377
Bus: 919 851 8077
Fax: 919 851 8107
TRANSPORTATION PLANNING/DESIGN - BRIDGE/STRUCTURE DESIGN
CIVIL/SITE DESIGN - GIS/GPS - CONSTRUCTION OBSERVATION

JAMES C. DAVIS
LEVEL IIIA NAME

633
LEVEL IIIA CERTIFICATION NO.

TYPICAL SECTION
RIP RAP WORK PAD
NOT TO SCALE

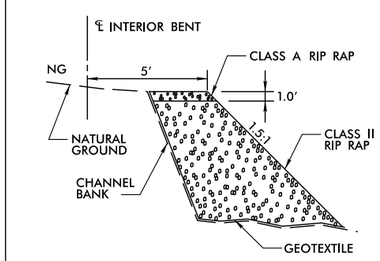

DETAIL A
RIP RAP AT STREAMBANK
(Not to Scale)

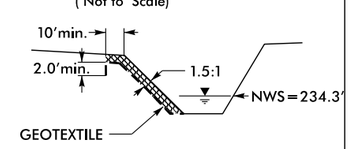

Type of Liner=136 TONS,CL II Rip-Rap
Geotextile=150 SY

STA. 13+21 -L-
STA. 14+20 -L-

2012 STANDARD DRAWINGS

1604.01	Railroad Erosion Control Detail	1632.01	Rock Inlet Sediment Trap Type A
1605.01	Temporary Silt Fence	1632.02	Rock Inlet Sediment Trap Type B
1606.01	Special Sediment Control Fence	1632.03	Rock Inlet Sediment Trap Type C
1607.01	Gravel Construction Entrance	1633.01	Temporary Rock Silt Check Type A
1622.01	Temporary Berms and Slope Drains	1633.02	Temporary Rock Silt Check Type B
1630.01	Riser Basin	1634.01	Temporary Rock Sediment Dam Type A
1630.02	Silt Basin Type B	1634.02	Temporary Rock Sediment Dam Type B
1630.03	Temporary Silt Ditch	1635.01	Rock Pipe Inlet Sediment Trap Type A
1630.04	Stilling Basin	1635.02	Rock Pipe Inlet Sediment Trap Type B
1630.05	Temporary Diversion	1640.01	Coir Fiber Baffle
1630.06	Special Stilling Basin	1645.01	Temporary Stream Crossing
1631.01	Matting Installation		

ROADSIDE ENVIRONMENTAL UNIT
DEPARTMENT OF TRANSPORTATION
DIVISION OF HIGHWAYS
RALEIGH, N.C.

2012 STANDARD SPECIFICATIONS

Std. #	Description	Symbol
1605.01	Temporary Silt Fence	
1606.01	Special Sediment Control Fence	
1632.03	Rock Inlet Sediment Trap Type C	

PROJECT REFERENCE NO.	SHEET NO.
17BP.R.5.35	EC 3A

DIVISION OF HIGHWAYS
STATE OF NORTH CAROLINA

SOIL STABILIZATION SUMMARY SHEET

MATTING FOR EROSION CONTROL (SLOPES)

CONST SHEET NO.	LINE	FROM STATION	TO STATION	SIDE	ESTIMATE (SY)
4	-L-	11+45	13+12	LT.	65
4	-L-	11+45	13+12	RT.	185
4	-L-	14+30	16+35	LT.	88
4	-L-	14+30	16+35	RT.	126
				SUBTOTAL	464
MISCELLANEOUS MATTING TO BE INSTALLED AS DIRECTED BY THE ENGINEER					
				TOTAL	464
				SAY	500

MATTING FOR EROSION CONTROL

CONST SHEET NO.	LINE	FROM STATION	TO STATION	SIDE	ESTIMATE (SY)

PROJECT REFERENCE NO.	SHEET NO.
17BP.5.R.35	EC-3B

DIVISION OF HIGHWAYS
STATE OF NORTH CAROLINA

SOIL STABILIZATION TIMEFRAMES

SITE DESCRIPTION	STABILIZATION TIME	TIMEFRAME EXCEPTIONS
PERIMETER DIKES, SWALES, DITCHES AND SLOPES	7 DAYS	NONE
HIGH QUALITY WATER (HQW) ZONES	7 DAYS	NONE
SLOPES STEEPER THAN 3:1	7 DAYS	IF SLOPES ARE 10' OR LESS IN LENGTH AND ARE NOT STEEPER THAN 2:1, 14 DAYS ARE ALLOWED.
SLOPES 3:1 OR FLATTER	14 DAYS	7 DAYS FOR SLOPES GREATER THAN 50' IN LENGTH.
ALL OTHER AREAS WITH SLOPES FLATTER THAN 4:1	14 DAYS	NONE, EXCEPT FOR PERIMETERS AND HQW ZONES.

PROJECT REFERENCE NO.	SHEET NO.
17BP.5.R.35	EC 3C
R/W SHEET NO.	

SILT FENCE COIR FIBER WATTLE BREAK DETAIL

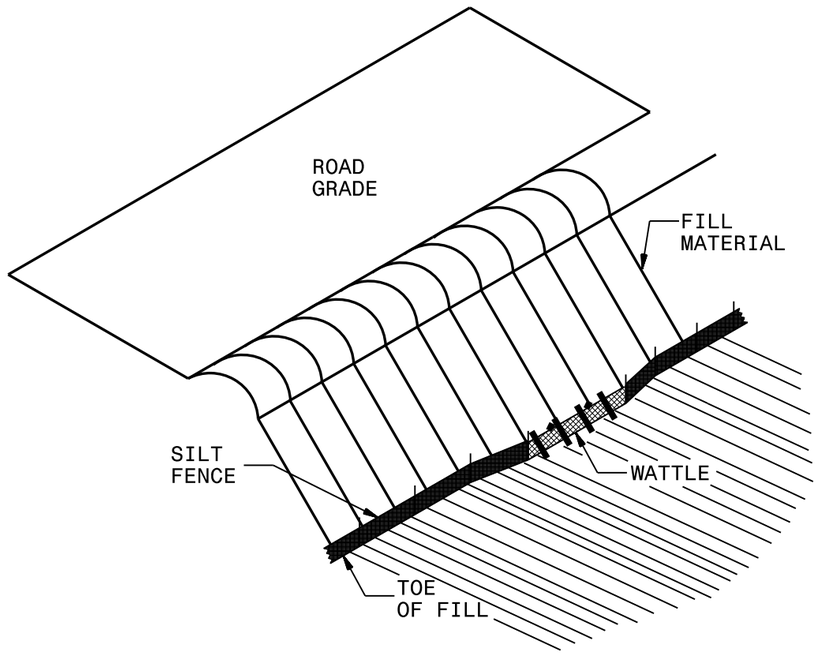

ISOMETRIC VIEW

NOTES:

USE MINIMUM 12 IN. DIAMETER COIR FIBER (COCONUT FIBER) WATTLE AND LENGTH OF 10 FT.

EXCAVATE A 1 TO 2 INCH TRENCH FOR WATTLE TO BE PLACED.

DO NOT PLACE WATTLE ON TOE OF SLOPE.

USE 2 FT. WOODEN STAKES WITH A 2 IN. BY 2 IN. NOMINAL CROSS SECTION.

INSTALL A MINIMUM OF 2 UPSLOPE STAKES AND 4 DOWNSLOPE STAKES AT AN ANGLE TO WEDGE WATTLE TO GROUND.

PROVIDE STAPLES MADE OF 0.125 IN. DIAMETER STEEL WIRE FORMED INTO A U SHAPE NOT LESS THAN 12″ IN LENGTH.

INSTALL STAPLES APPROXIMATELY EVERY 1 LINEAR FOOT ON BOTH SIDES OF WATTLE AND AT EACH END TO SECURE IT TO THE SOIL.

WATTLE INSTALLATION CAN BE ON OUTSIDE OF THE SILT FENCE AS DIRECTED.

INSTALL TEMPORARY SILT FENCE IN ACCORDANCE WITH SECTION 1605 OF THE STANDARD SPECIFICATIONS.

INSET A

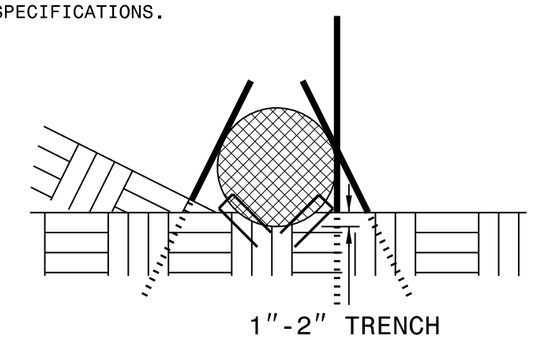

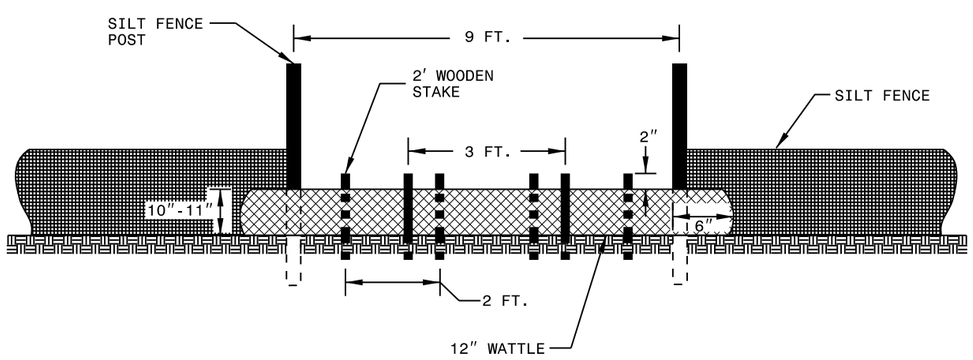

VIEW FROM SLOPE

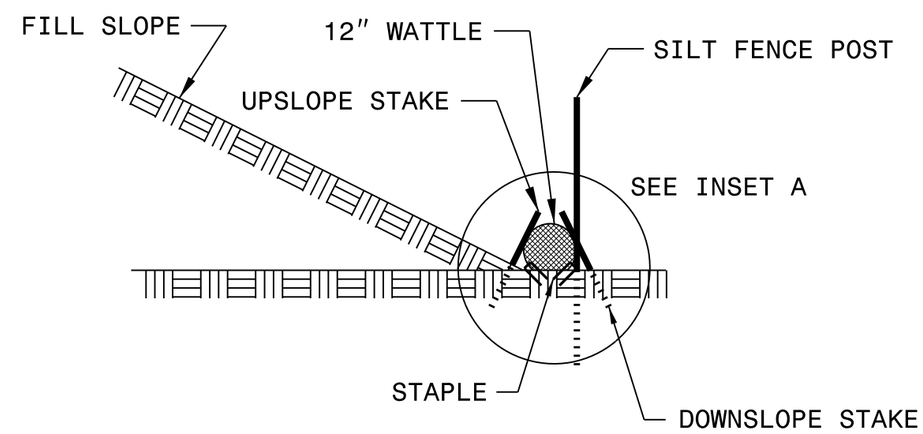

SIDE VIEW

STATE	STATE PROJECT REFERENCE NO.	SHEET NO.	TOTAL SHEETS
N.C.	17BP.5.R.35	RF-1	
STATE PROJ. NO.	F.A. PROJ. NO.	DESCRIPTION	

PLANTING DETAILS

SEEDLING / LINER BAREROOT PLANTING DETAIL

HEALING IN

1. Locate a healing-in site in a shady, well protected area.
2. Excavate a flat bottom trench 12 inches deep and provide drainage.

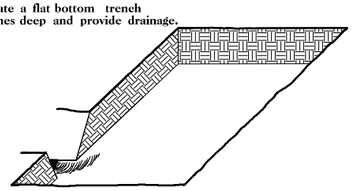

3. Backfill the trench with 2 inches well rotted sawdust. Place a 2 inch layer of well rotted sawdust at a sloping angle at one end of the trench.

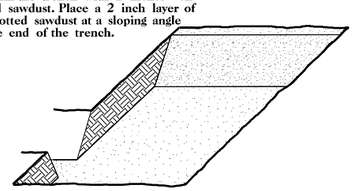

4. Place a single layer of plants against the sloping end so that the root collar is at ground level.

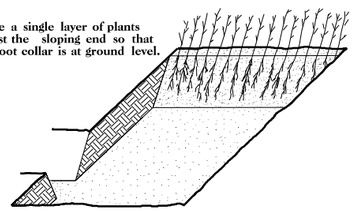

5. Place a 2 inch layer of well rotted sawdust over the roots maintaining a sloping angle.

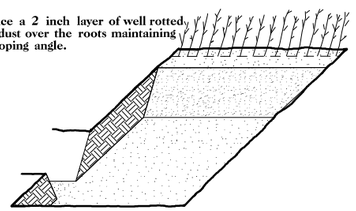

6. Repeat layers of plants and sawdust as necessary and water thoroughly.

DIBBLE PLANTING METHOD
USING THE KBC PLANTING BAR

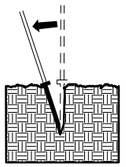

1. Insert planting bar as shown and pull handle toward planter.

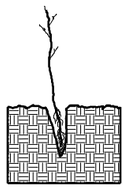

2. Remove planting bar and place seedling at correct depth.

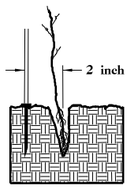

3. Insert planting bar 2 inches toward planter from seedling.

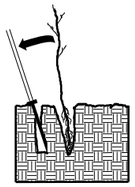

4. Pull handle of bar toward planter, firming soil at bottom.

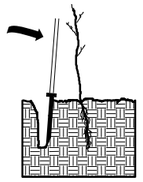

5. Push handle forward firming soil at top.

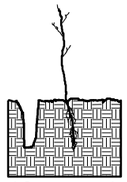

6. Leave compaction hole open. Water thoroughly.

PLANTING NOTES:

PLANTING BAG
During planting, seedlings shall be kept in a moist canvas bag or similar container to prevent the root systems from drying.

KBC PLANTING BAR
Planting bar shall have a blade with a triangular cross section, and shall be 12 inches long, 4 inches wide and 1 inch thick at center.

ROOT PRUNING
All seedlings shall be root pruned, if necessary, so that no roots extend more than 10 inches below the root collar.

REFORESTATION

☐ TREE REFORESTATION SHALL BE PLANTED 6 FT. TO 10 FT. ON CENTER, RANDOM SPACING, AVERAGING 8 FT. ON CENTER, APPROXIMATELY 680 PLANTS PER ACRE.

REFORESTATION

MIXTURE, TYPE, SIZE, AND FURNISH SHALL CONFORM TO THE FOLLOWING:

25%	LIRIODENDRON TULIPIFERA	TULIP POPLAR	12 in – 18 in BR
25%	PLATANUS OCCIDENTALIS	SYCAMORE	12 in – 18 in BR
25%	FRAXINUS PENNSYLVANICA	GREEN ASH	12 in – 18 in BR
25%	BETULA NIGRA	RIVER BIRCH	12 in – 18 in BR

REFORESTATION DETAIL SHEET

N.C.D.O.T. - ROADSIDE ENVIRONMENTAL UNIT

09/08/99

17BP.5.R.35

CONTRACT:

T.I.P. NO.	SHEET NO.
17BP.5.R.35	UO–1

STATE OF NORTH CAROLINA
DIVISION OF HIGHWAYS

UTILITIES BY OTHERS PLANS
WAKE COUNTY

LOCATION: BRIDGE NO. 201 OVER LITTLE RIVER ON SR 2368 (GREEN PACE RD.)

TYPE OF WORK: UTILITIES RELOCATION

See Sheet 1-A For Index of Sheets

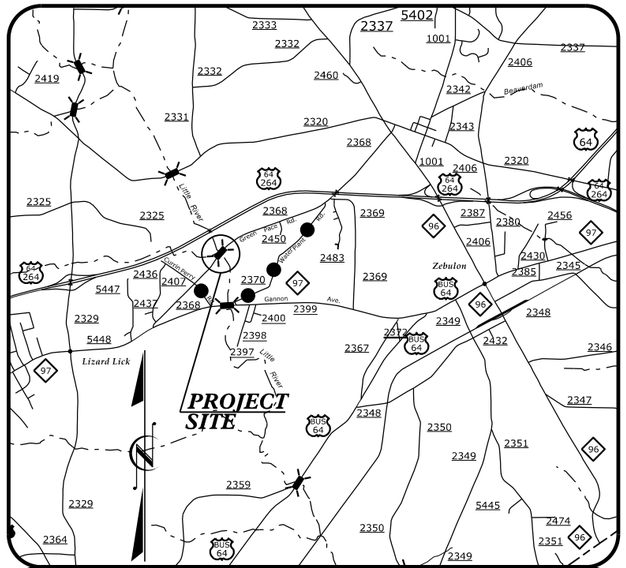

VICINITY MAP

OFF–SITE DETOUR

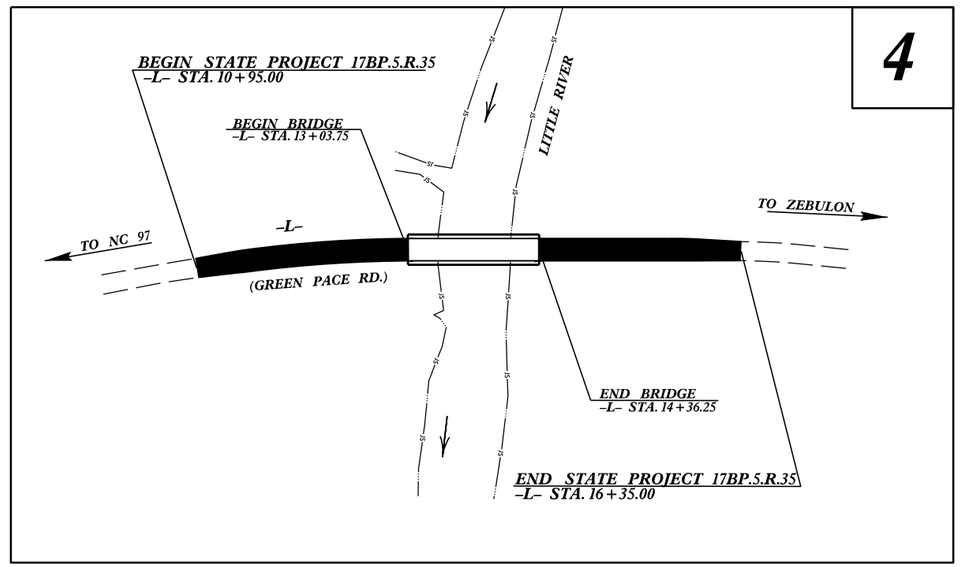

GRAPHIC SCALES

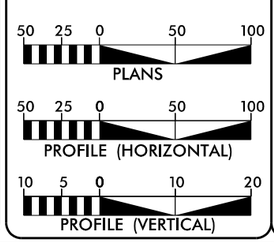

INDEX OF SHEETS

SHEET NO.	*DESCRIPTION*
UO–1	*TITLE SHEET*
UO–2	*UTILITIES BY OTHERS PLAN SHEET*

UTILITY OWNERS ON PROJECT

(A) PSNC (GAS)

WETHERILL ENGINEERING

Prepared for S. T. Wooten Corp. in the Office of:
559 JONES FRANKLIN ROAD
SUITE 164
Raleigh, N.C. 27606
License No. F-0377
Bus: 919 851 8077
Fax: 919 851 8107

2012 STANDARD SPECIFICATIONS

RIGHT OF WAY DATE:
AUGUST 15, 2012

LETTING DATE:
MARCH 2014

NCDOT CONTACT:

EDWARD G. WETHERILL, PE
PROJECT ENGINEER

GREG S. PURVIS, PE
PROJECT DESIGN ENGINEER

JOHN D. SCHRINER, PLS
UTILITY COORDINATOR

DESIGN–BUILD ENGINEER

STATE OF NORTH CAROLINA • DEPARTMENT OF TRANSPORTATION

$$$$$SYSTIME$$$$$
$$$$$$$$$DGN$$$$$$$$$
$$$$$USERNAME$$$

PROJECT REFERENCE NO.	SHEET NO.
17BP.5.R.35	U0-2

UTILITIES BY OTHERS

NOTE:
ALL PROPOSED UTILITY WORK SHOWN ON THIS SHEET WILL BE DONE BY OTHERS

WETHERILL ENGINEERING
559 Jones Franklin Rd. Suite 164
Raleigh, N.C. 27606
License No. F-0377
Bus: 919 851 8077
Fax: 919 851 8107
TRANSPORTATION PLANNING/DESIGN - BRIDGE/STRUCTURE DESIGN
CIVIL/SITE DESIGN - GIS/GPS - CONSTRUCTION OBSERVATION

DATUM DESCRIPTION

THE LOCALIZED COORDINATE SYSTEM DEVELOPED FOR THIS PROJECT IS BASED ON THE STATE PLANE COORDINATES ESTABLISHED BY NCDOT FOR MONUMENT "91-0201-1"
WITH NAD 83/NSRS 2007 STATE PLANE GRID COORDINATES OF
NORTHING: 756216.579(ft) EASTING: 2191262.281(ft)
ELEVATION: 271.839(ft)
THE AVERAGE COMBINED GRID FACTOR USED ON THIS PROJECT (GROUND TO GRID) IS: 0.999915145
THE N.C. LAMBERT GRID BEARING AND LOCALIZED HORIZONTAL GROUND DISTANCE FROM "91-0201-1" TO -L- STATION 10+00.00 IS N 33° 27' 13" E 538.20'

ALL LINEAR DIMENSIONS ARE LOCALIZED HORIZONTAL DISTANCES
VERTICAL DATUM USED IS NAVD 88

PI Sta 10+24.13
△ = 3° 56' 53.1" (RT)
D = 8° 11' 31.5"
L = 48.19'
T = 24.13'
R = 700.00'

PI Sta 12+15.29
△ = 8° 49' 09.8" (RT)
D = 4° 30' 45.5"
L = 195.44'
T = 97.94'
R = 1,270.00'

BL-1=N 756216.58, E 2191262.28, ELEV. 271.84'
BL-2=N 755628.31, E 2190720.19, ELEV. 262.71'
BL-3=N 756893.69, E 2191693.71, ELEV. 242.78'
BL-4=N 757218.70, E 2192027.36, ELEV. 242.26'

NAD 83/NSRS 2007

BEGIN NCDOT PROJECT 17BP.5.R.35
-L- STA.10+95.00

END NCDOT PROJECT 17BP.5.R.35
-L- STA.16+35.00

PI Sta 16+45.12
△ = 5° 33' 57.9" (RT)
D = 3° 22' 15.0"
L = 165.12'
T = 82.64'
R = 1,700.00'

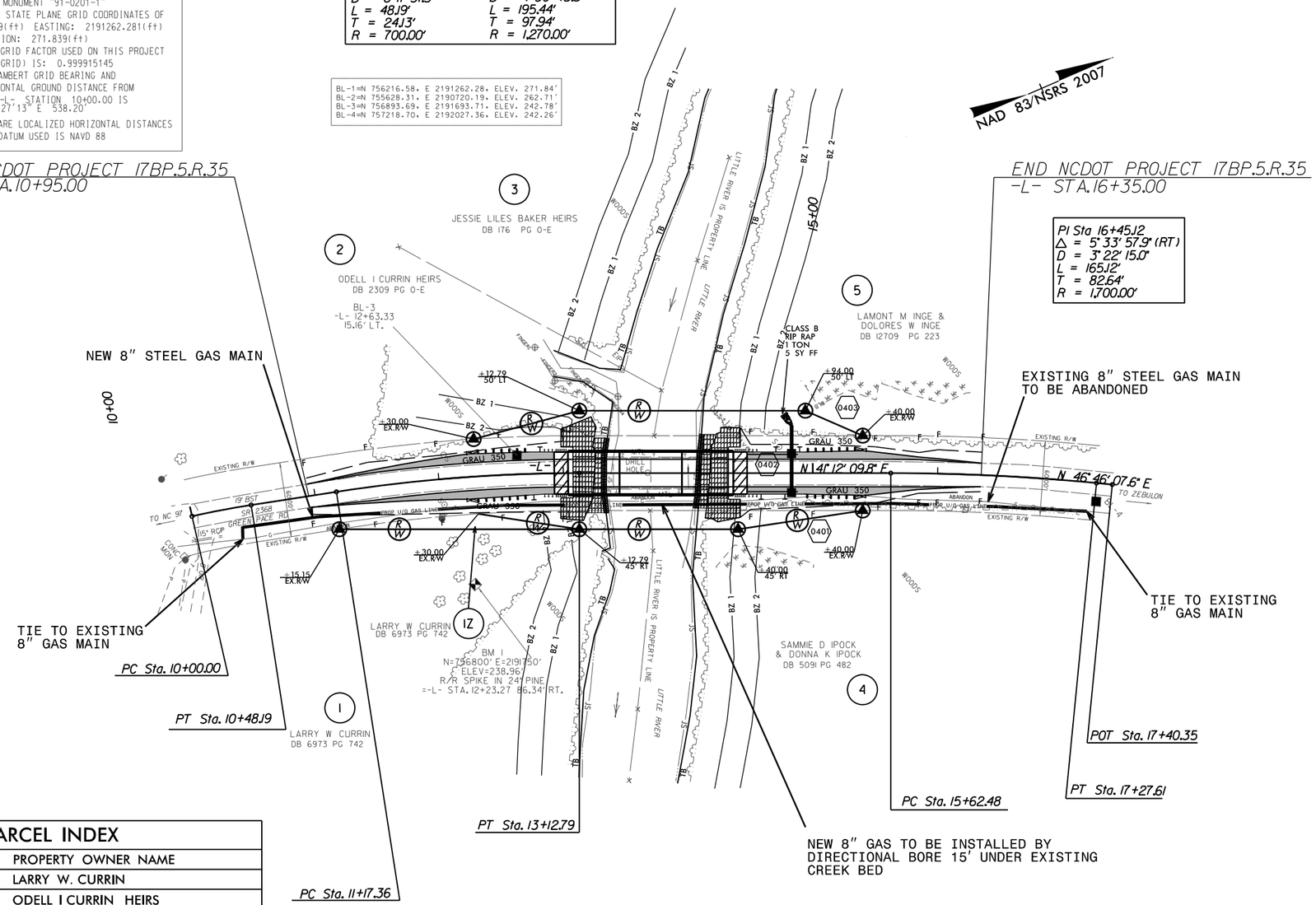

PARCEL INDEX

PARCEL NO.	PROPERTY OWNER NAME
1	LARRY W. CURRIN
2	ODELL I CURRIN HEIRS
3	JESSE LILES BAKER HEIRS
4	SAMMIE D. & DONNA K. IPOCK
5	LAMONT M. & DOLORES W. INGE

SEE SHEET 5 FOR -L- PROFILE
SEE SHEET S-1 THRU S-19 FOR STRUCTURE PLANS

PROJECT: 17BP.5.R.35
COUNTY: WAKE
STATION: 13 + 70.00 –L– (90 SKEW)
REPLACE BRIDGE NO. 201
OVER LITTLE RIVER
ON SR 2363 (GREEN PACE ROAD)

REVISIONS

8/17/99

2:00:33 PM
FS 2012 Wake #201\Utilities\Rdy_Ut\Proj\17BP.5.R.35_910201_ut_rdy4_U02_psh.dgn
12/12/2013

PROJ. REFERENCE NO.	SHEET NO.
17BP.5.R.35	X-1A

STATE OF NORTH CAROLINA
DIVISION OF HIGHWAYS

NOTE: EMBANKMENT COLUMN INCLUDES BACKFILL FOR UNDERCUT

CROSS-SECTION SUMMARY

Station L	Uncl. Exc. (cu. yd.)	Embt (cu. yd.)
10+95.00	0	0
11+45.00	28	8
12+00.00	16	25
12+50.00	3	48
13+00.00	0	74
13+05.00	0	9

Station L	Uncl. Exc. (cu. yd.)	Embt (cu. yd.)
14+35.00	0	0
14+50.00	21	17
15+00.00	53	48
15+50.00	38	34
15+85.00	23	9
16+00.00	9	2
16+35.00	21	6

8/23/99

0 2.5 5	PROJ. REFERENCE NO.	SHEET NO.
	17BP.5.R.35	X-1

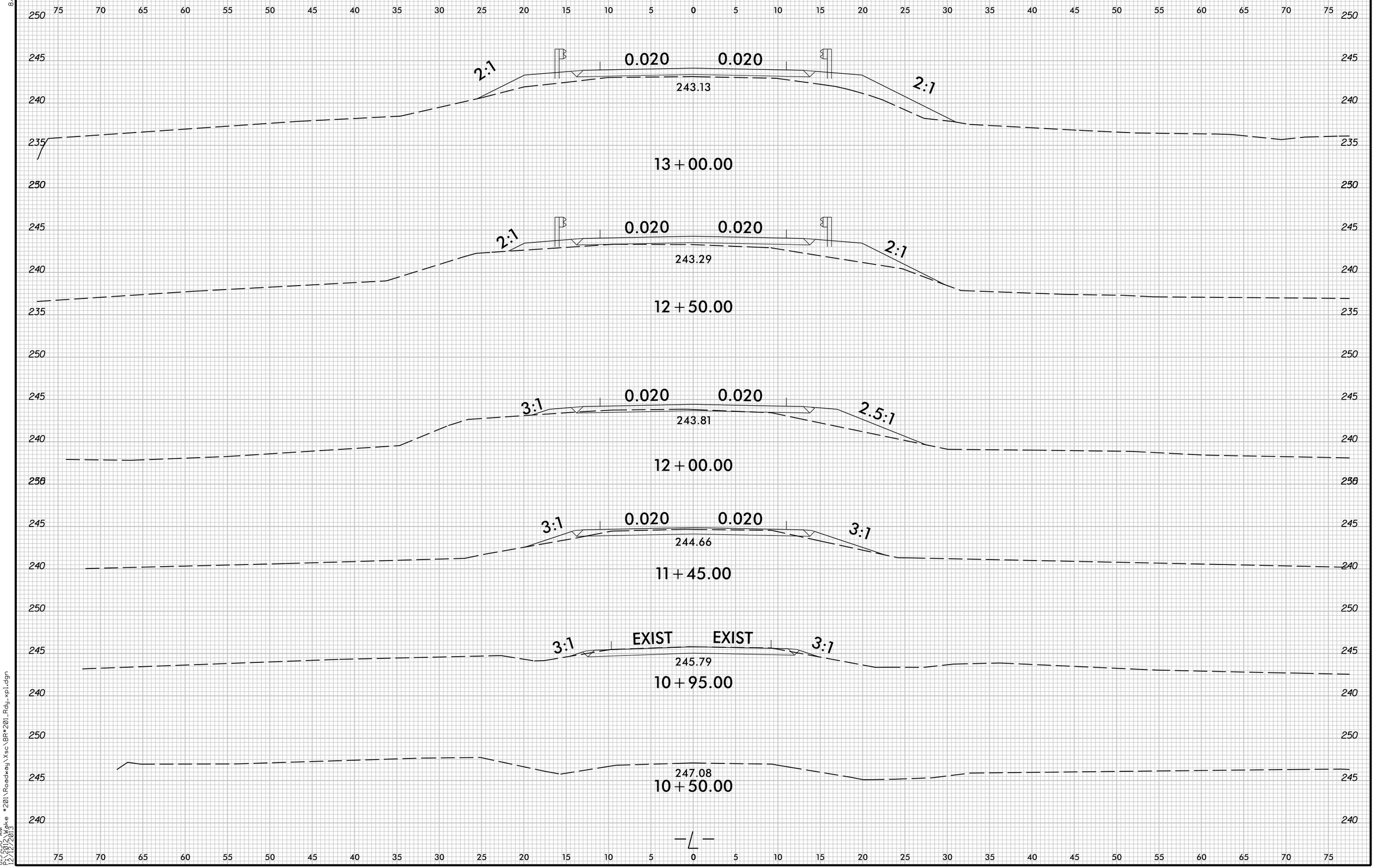

8:59:50 AM
12/12/2013
Pwke =201\Roadway\Xsc\BR=201_Rdy_xpl.dgn

0 2.5 5	PROJ. REFERENCE NO.	SHEET NO.
	17BP.5.R.35	X-2

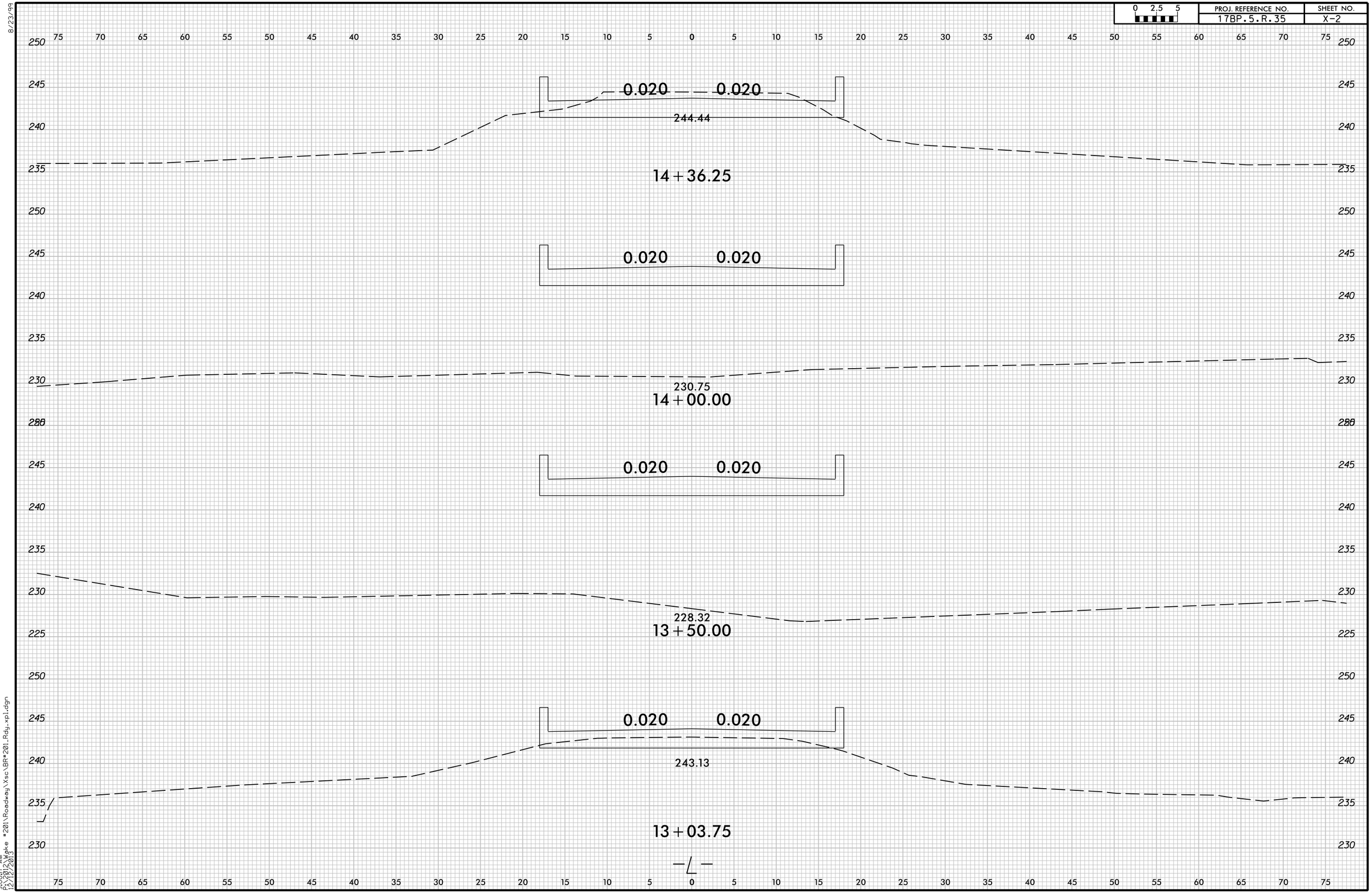

8/23/99

9:00:17 AM
P:\2012\Wake #201\Roadway\Xsc\BR#201_Rdy_xpl.dgn
12/12/2013

PROJ. REFERENCE NO.	SHEET NO.
17BP.5.R.35	X-3

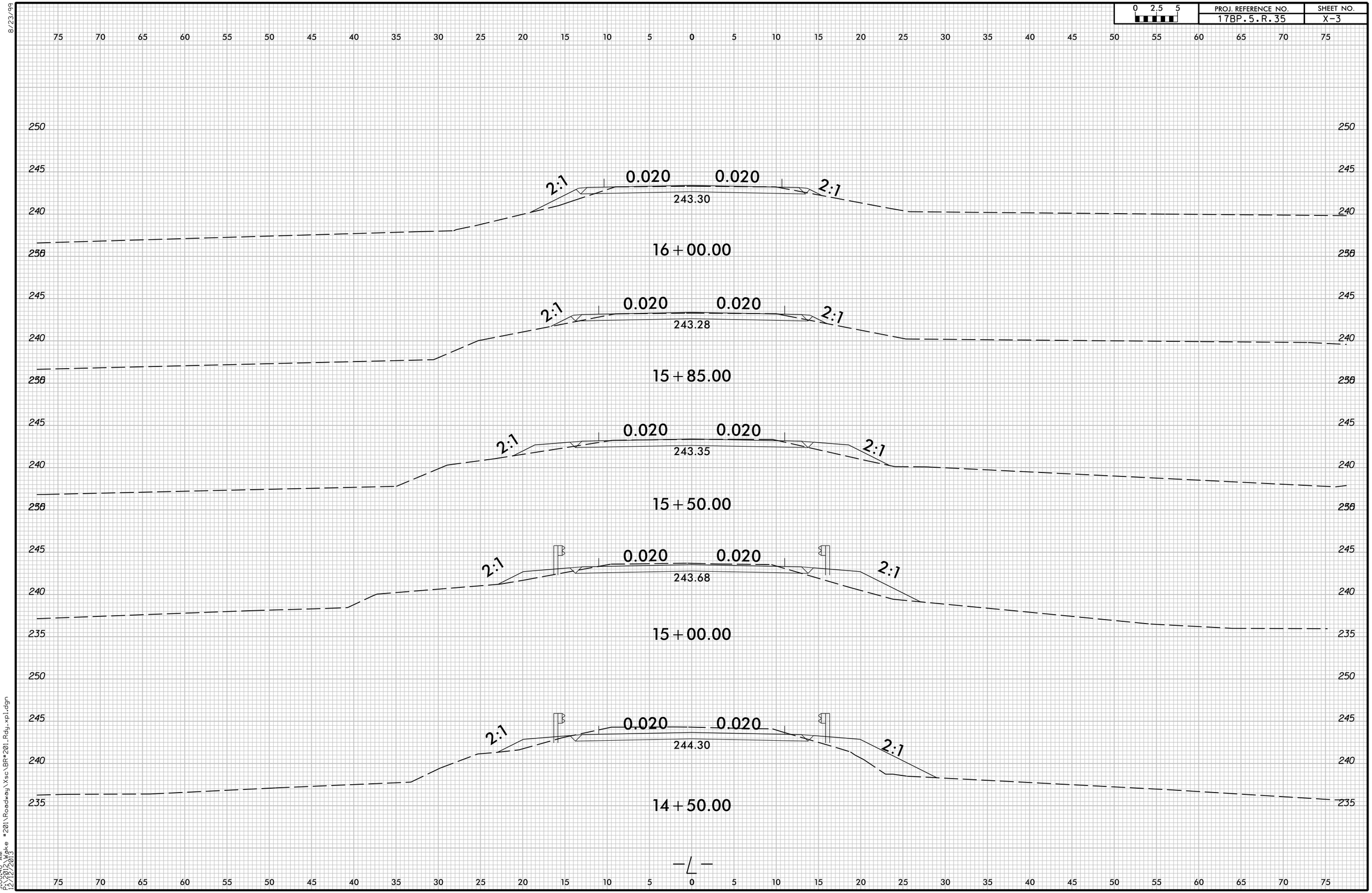

8/23/99

9:00:40 AM
12/18/2013

8/23/99

0 2.5 5	PROJ. REFERENCE NO.	SHEET NO.
	17BP.5.R.35	X-4

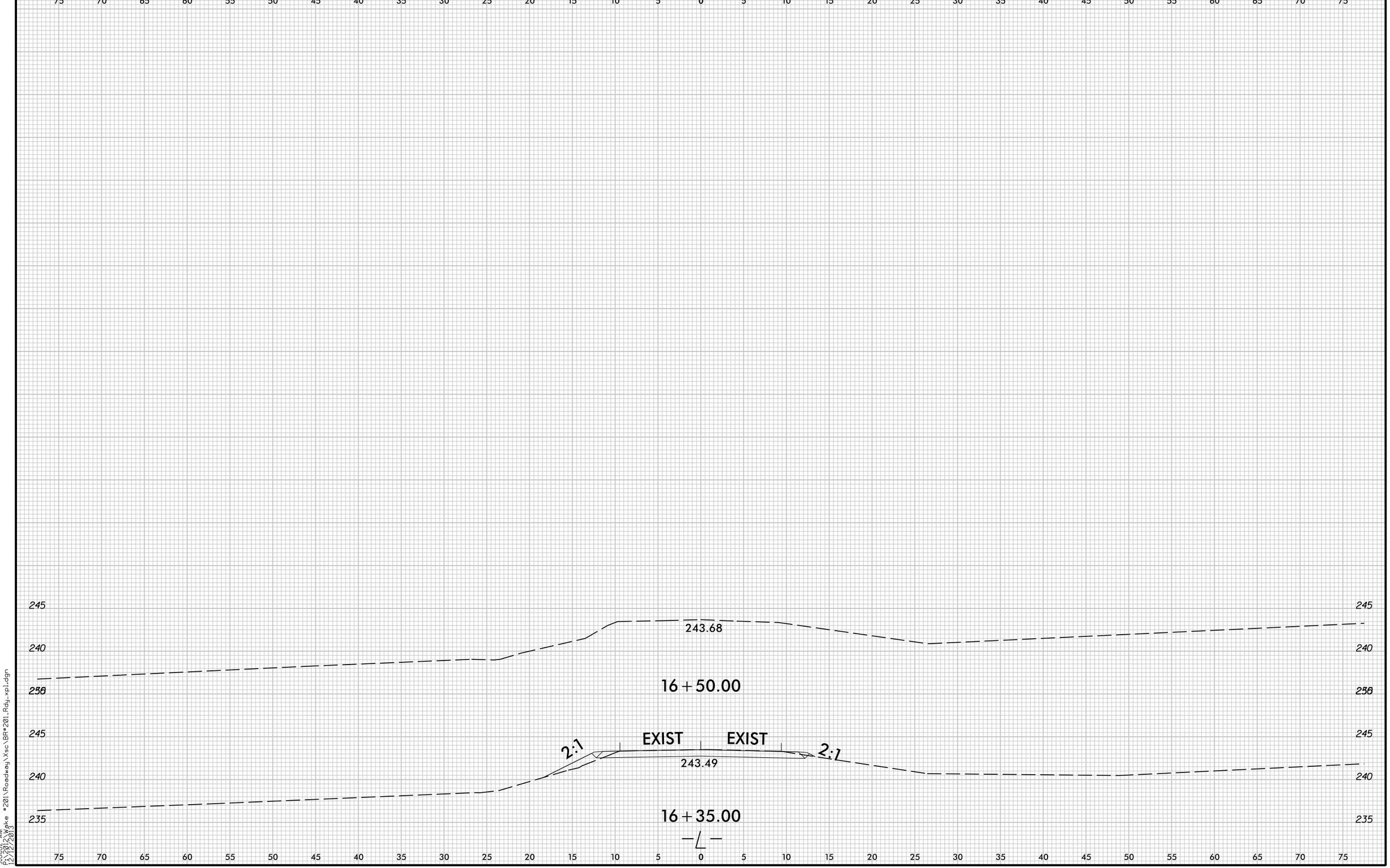

9:01:02 AM
P:\300_Wake
12/12/2013
#201\Roadway\Xsc\BR#201_Rdy_xpl.dgn

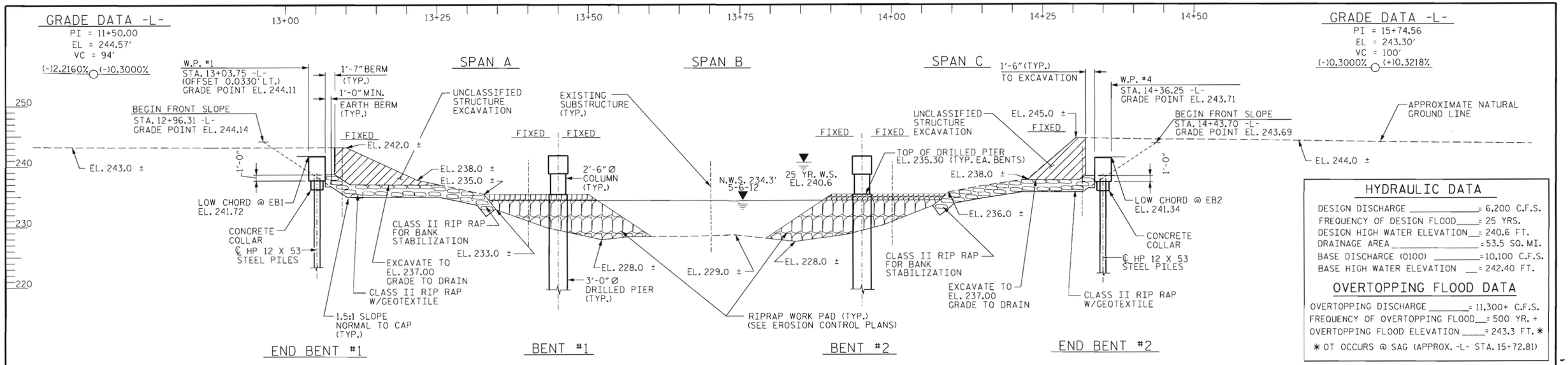

SECTION ALONG -L-

NOTE: THE APPROXIMATE NATURAL GROUND ELEVATIONS ARE ALONG THE EDGE OF THE BRIDGE ON THE UPSTREAM SIDE.

HYDRAULIC DATA

DESIGN DISCHARGE	= 6,200 C.F.S.
FREQUENCY OF DESIGN FLOOD	= 25 YRS.
DESIGN HIGH WATER ELEVATION	= 240.6 FT.
DRAINAGE AREA	= 53.5 SQ. MI.
BASE DISCHARGE (Q100)	= 10,100 C.F.S.
BASE HIGH WATER ELEVATION	= 242.40 FT.

OVERTOPPING FLOOD DATA

OVERTOPPING DISCHARGE	= 11,300+ C.F.S.
FREQUENCY OF OVERTOPPING FLOOD	= 500 YR. +
OVERTOPPING FLOOD ELEVATION	= 243.3 FT. *

* OT OCCURS @ SAG (APPROX. -L- STA. 15+72.81)

I HEREBY CERTIFY THESE PLANS ARE THE AS-BUILT PLANS

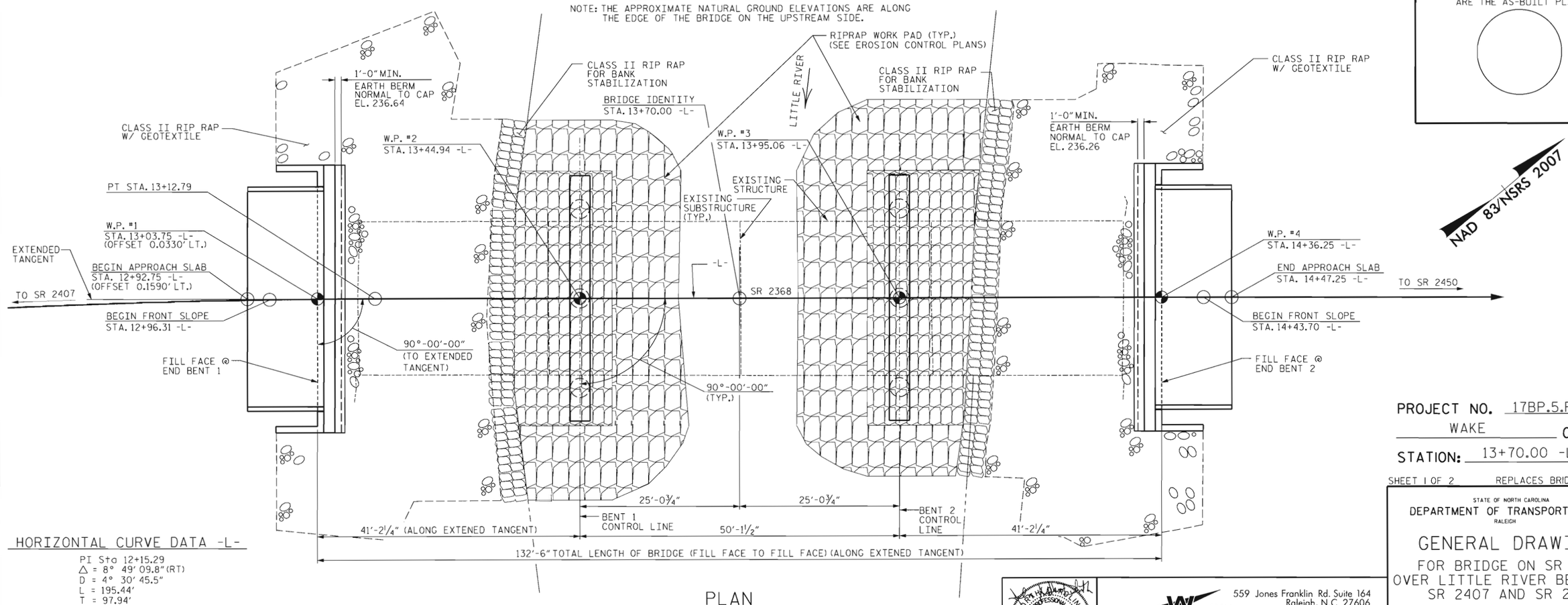

PLAN

(PILES NOT SHOWN FOR CLARITY)

HORIZONTAL CURVE DATA -L-

PI Sta 12+15.29
Δ = 8° 49' 09.8" (RT)
D = 4° 30' 45.5"
L = 195.44'
T = 97.94'
R = 1,270.00'

PROJECT NO. 17BP.5.R.35
WAKE COUNTY
STATION: 13+70.00 -L-

SHEET 1 OF 2 REPLACES BRIDGE NO. 201

STATE OF NORTH CAROLINA
DEPARTMENT OF TRANSPORTATION
RALEIGH

GENERAL DRAWING

FOR BRIDGE ON SR 2368 OVER LITTLE RIVER BETWEEN SR 2407 AND SR 2450

NORTH CAROLINA PROFESSIONAL SEAL 22072 ENGINEER JOHN ARTHUR DILWORTH 12/13

WETHERILL ENGINEERING
559 Jones Franklin Rd. Suite 164
Raleigh, N.C. 27606
Bus: 919 851 8077
Fax: 919 851 8107
License: F-0377
TRANSPORTATION PLANNING/DESIGN - BRIDGE/STRUCTURE DESIGN
CIVIL/SITE DESIGN - GIS/GPS - CONSTRUCTION OBSERVATION

REVISIONS							SHEET NO.
NO.	BY:	DATE:	NO.	BY:	DATE:		S-1
1			3				TOTAL SHEETS
2			4				19

DRAWN BY : J. PENDERGRAFT DATE : 7/12
CHECKED BY : J. DILWORTH DATE : 7/12

P:\2012\Wake #201\Structures\OGN\BR #201_STR_GD1.dgn
11/21/2013 7:09:53 AM

BM: BL-3 TRANSVERSE STATION MARKER -L- STA. 12+63.4, OFFSET 15.16' LT. N 756893.69, E 2191693.71 ELEV. 242.78'

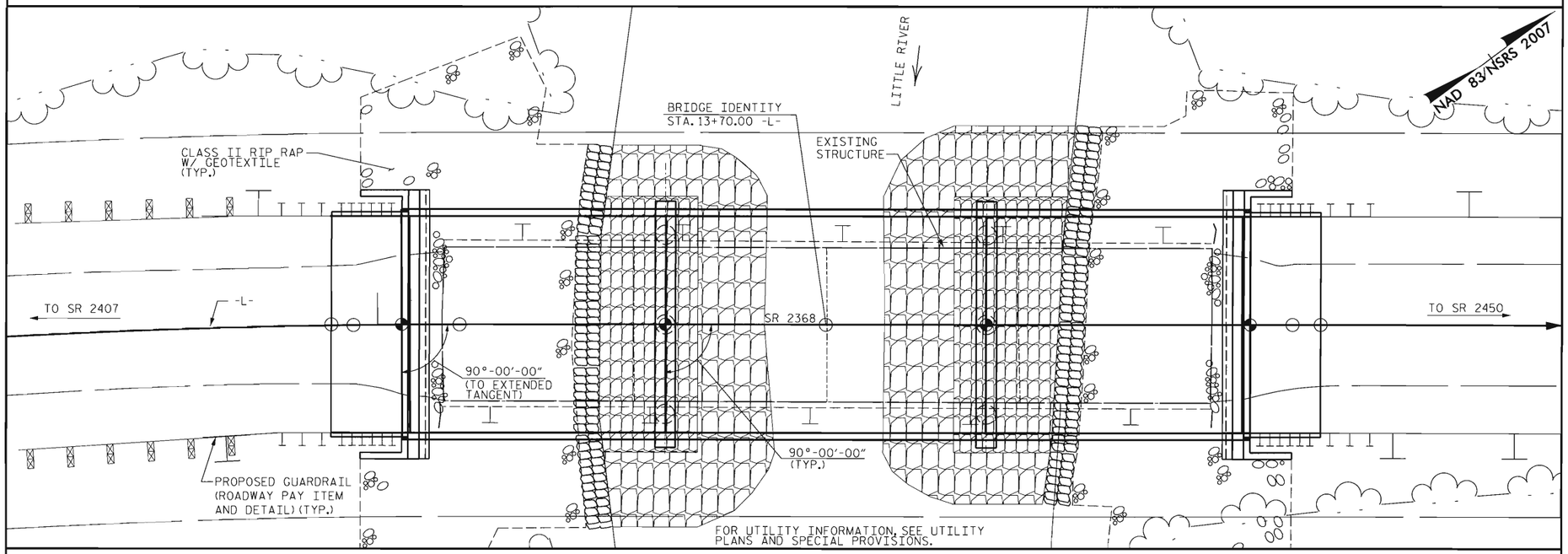

LOCATION SKETCH

NOTES:

ASSUMED LIVE LOAD = HL-93 OR ALTERNATE LOADING.

FOR OTHER DESIGN DATA AND GENERAL NOTES, SEE SHEET SN.

FOR EROSION CONTROL MEASURES, SEE EROSION CONTROL PLANS.

THIS BRIDGE HAS BEEN DESIGNED IN ACCORDANCE WITH THE AASHTO LRFD BRIDGE DESIGN SPECIFICATIONS FOR SEISMIC PERFORMANCE ZONE 1.

THE EXISTING STRUCTURE CONSISTING OF 1 SPAN @ 30'-3" AND 3 SPANS @ 30'-2" WITH A PRESTRESSED CONCRETE CHANNELS SUPERSTRUCTURE AND A CLEAR ROADWAY WIDTH OF 23.9' ON A SUBSTRUCTURE CONSISTING OF PRECAST CONCRETE CAPS ON TIMBER PILES AND LOCATED AT THE PROPOSED STRUCTURE LOCATION SHALL BE REMOVED.

REMOVAL OF THE EXISTING BRIDGE SHALL BE PERFORMED SO AS NOT TO ALLOW DEBRIS TO FALL INTO THE WATER. THE CONTRACTOR SHALL REMOVE THE BRIDGE AND SUBMIT PLANS FOR DEMOLITION IN ACCORDANCE WITH ARTICLE 402-2 OF THE STANDARD SPECIFICATIONS.

THE MATERIAL SHOWN IN THE CROSS-HATCHED AREA SHALL BE EXCAVATED FOR A DISTANCE OF 30 FT. EACH SIDE OF CENTERLINE ROADWAY AS DIRECTED BY ENGINEER. THIS WORK WILL BE PAID FOR AT THE CONTRACT LUMP SUM PRICE FOR UNCLASSIFIED STRUCTURE EXCAVATION. SEE SECTION 412 OF THE STANDARD SPECIFICATIONS.

THE SUBSTRUCTURE OF THE EXISTING BRIDGE INDICATED ON THE PLANS IS FROM THE BEST INFORMATION AVAILABLE. SINCE THIS INFORMATION IS SHOWN FOR THE CONVENIENCE OF THE CONTRACTOR, THE CONTRACTOR SHALL HAVE NO CLAIM WHATSOEVER AGAINST THE DEPARTMENT OF TRANSPORTATION FOR ANY DELAYS OR ADDITIONAL COST INCURRED BASED ON DIFFERENCE BETWEEN THE EXISTING BRIDGE SUBSTRUCTURE SHOWN ON THE PLANS AND THE ACTUAL CONDITIONS AT THE PROJECT SITE.

ASPHALT WEARING SURFACE IS INCLUDED IN ROADWAY QUANTITY ON ROADWAY PLANS.

THIS STRUCTURE HAS BEEN DESIGNED IN ACCORDANCE WITH "HEC 18 EVALUATING SCOUR AT BRIDGES".

FOR SUBMITTAL OF WORKING DRAWINGS, SEE SPECIAL PROVISIONS.

FOR FALSEWORK AND FORMWORK, SEE SPECIAL PROVISIONS.

FOR CRANE SAFETY, SEE SPECIAL PROVISIONS.

FOR GROUT FOR STRUCTURES, SEE SPECIAL PROVISIONS.

TOTAL BILL OF MATERIAL

	REMOVAL OF EXISTING STRUCTURE	PILE EXCAVATION IN SOIL	PILE EXCAVATION NOT IN SOIL	3'-0" DIA. DRILLED PIERS IN SOIL	3'-0" DIA. DRILLED PIERS NOT IN SOIL	PERMANENT STEEL CASING FOR 3'-0" DIA. DRILLED PIER	SID INSPECTIONS	SPT TESTING	CSL TESTING	UNCLASSIFIED STRUCTURE EXCAVATION	CLASS A CONCRETE	BRIDGE APPROACH SLABS	REINFORCING STEEL	SPIRAL COLUMN REINFORCING STEEL	HP 12 x 53 STEEL PILES		STEEL PILE POINTS	VERTICAL CONCRETE BARRIER RAIL	RIP RAP CLASS II (2'-0" THICK)	GEOTEXTILE FOR DRAINAGE	ELASTOMERIC BEARINGS	3'-0" X 1'-9" PRESTRESSED CONCRETE CORED SLABS	
	LUMP SUM	LIN. FT.	LIN. FT.	LIN. FT.	LIN. FT.	LIN. FT.	EACH	EACH	EACH	LUMP SUM	CU. YDS.	LUMP SUM	LBS.	LBS.	NO.	LIN. FT.	EACH	LIN. FT.	TONS	SQ. YD.	LUMP SUM	NO.	LIN. FT.
SUPERSTRUCTURE	LUMP SUM											LUMP SUM						260.50				36	1560'-0"
END BENT 1		47	23							LUMP SUM	22.8		2806		7	85	7		270	300			
BENT 1				15.90	30.00	20.9					15.5		7189	1001									
BENT 2				17.90	25.00	25.9					15.4		7003	942									
END BENT 2		0	0							LUMP SUM	22.8		2806		7	110	7		270	300			
TOTAL	LUMP SUM	47	23	33.80	55.00	46.8	1	1	1	LUMP SUM	76.5	LUMP SUM	19804	1943	14	195	14	260.50	540	600	LUMP SUM	36	1560'-0"

FOUNDATION NOTES:

FOR PILES, SEE SECTION 450 OF THE STANDARD SPECIFICATIONS.

PILES AT END BENT NO. 1 AND END BENT NO. 2 ARE DESIGNED FOR A FACTORED RESISTANCE OF 61 TONS PER PILE.

DRIVE PILES AT END BENT NO. 1 AND END BENT NO. 2 TO A REQUIRED DRIVING RESISTANCE OF 105 TONS PER PILE.

STEEL H-PILE POINTS ARE REQUIRED FOR STEEL H-PILES AT END BENT NO. 1 AND END BENT NO. 2. FOR STEEL PILE POINTS, SEE SECTION 450 OF THE STANDARD SPECIFICATIONS.

PILE EXCAVATION IS REQUIRED TO INSTALL PILES AT END BENT NO. 1. EXCAVATION HOLES AT PILE LOCATIONS TO ELEVATIONS 227.6 FT. FOR PILE EXCAVATION, SEE SECTION 450 OF THE STANDARD SPECIFICATIONS.

CONCRETE OR GROUT IS REQUIRED TO FILL HOLES FOR PILE EXCAVATION AT END BENT NO. 1.

FOR DRILLED PIERS, SEE SECTION 411 OF THE STANDARD SPECIFICATIONS.

DRILLED PIERS AT END BENT NO. 1 AND NO. 2 ARE DESIGNED FOR A FACTORED RESISTANCE OF 395 TONS PER PIER. CHECK FIELD CONDITIONS FOR THE REQUIRED TIP RESISTANCE OF 40 TSF.

INSTALL DRILLED PIERS AT BENT NO. 1 THAT EXTEND TO AN ELEVATION NO HIGHER THAN 220 FT. AND SATISFY THE REQUIRED TIP RESISTANCE.

INSTALL DRILLED PIERS AT BENT NO. 2 THAT EXTEND TO AN ELEVATION NO HIGHER THAN 221 FT. AND SATISFY THE REQUIRED TIP RESISTANCE.

PERMANENT STEEL CASINGS ARE REQUIRED FOR DRILLED PIERS AT BENT NO. 1. DO NOT EXTEND PERMANENT CASINGS BELOW ELEVATIONS 227 FEET (L&C) AND 231 FEET (R) WITHOUT PRIOR APPROVAL FROM THE ENGINEER.

PERMANENT STEEL CASINGS ARE REQUIRED FOR DRILLED PIERS AT BENT NO. 2. DO NOT EXTEND PERMANENT CASINGS BELOW ELEVATIONS 226 FEET (L&C) AND 228 FEET (R) WITHOUT PRIOR APPROVAL FROM THE ENGINEER.

THE SCOUR CRITICAL ELEVATIONS FOR BENT NO. 1 IS ELEVATION 225 FEET. SCOUR CRITICAL ELEVATIONS ARE USED TO MONITOR POSSIBLE SCOUR PROBLEMS DURING THE LIFE OF THE STRUCTURE.

THE SCOUR CRITICAL ELEVATIONS FOR BENT NO. 2 IS ELEVATION 226 FEET. SCOUR CRITICAL ELEVATIONS ARE USED TO MONITOR POSSIBLE SCOUR PROBLEMS DURING THE LIFE OF THE STRUCTURE.

SPT MAY BE REQUIRED FOR DRILLED PIERS AT BENT NO. 1 AND BENT NO. 2. FOR SPT TESTING, SEE SECTION 411 OF THE STANDARD SPECIFICATIONS.

CSL TUBES ARE REQUIRED AND CSL TESTING MAY BE REQUIRED FOR DRILLED PIERS AT BENT NO. 1 AND BENT NO. 2. FOR CSL TESTING, SEE SECTIONS 411 OF THE STANDARD SPECIFICATIONS.

SID INSPECTIONS MAY BE REQUIRED FOR DRILLED PIERS. THE ENGINEER WILL DETERMINE THE NEED FOR SID INSPECTIONS. FOR SID INSPECTIONS, SEE SECTIONS 411 OF THE STANDARD SPECIFICATIONS.

PROJECT NO. 17BP.5.R.35
WAKE COUNTY
STATION: 13+70.00 -L-

SHEET 2 OF 2 REPLACES BRIDGE NO. 201

STATE OF NORTH CAROLINA
DEPARTMENT OF TRANSPORTATION
RALEIGH

GENERAL DRAWING
FOR BRIDGE ON SR 2368
OVER LITTLE RIVER BETWEEN
SR 2407 AND SR 2450

N.C. PROFESSIONAL SEAL 22072 ENGINEER JOHN ARTHUR DILWORTH
7-24-13

WETHERILL ENGINEERING
559 Jones Franklin Rd. Suite 164
Raleigh, N.C. 27606
Bus: 919 851 8077
Fax: 919 851 8107
License: F-0377

TRANSPORTATION PLANNING/DESIGN - BRIDGE/STRUCTURE DESIGN
CIVIL/SITE DESIGN - GIS/GPS - CONSTRUCTION OBSERVATION

REVISIONS						SHEET NO.
NO.	BY:	DATE:	NO.	BY:	DATE:	S-2
1			3			TOTAL SHEETS
2			4			19

DRAWN BY : J. PENDERGRAFT DATE : 9/12
CHECKED BY : J. DILWORTH DATE : 9/12

P:\2012\Wake #201\Structures\DGN\BR#201_STR_TS1.dgn
11/20/2013 3:11:32 PM

LOAD AND RESISTANCE FACTOR RATING (LRFD) SUMMARY FOR PRESTRESSED CONCRETE GIRDERS

LEVEL		VEHICLE	WEIGHT (W) (TONS)	CONTROLLING LOAD RATING	MINIMUM RATING FACTORS (RF)	TONS = W X RF	STRENGTH I LIMIT STATE											SERVICE III LIMIT STATE						COMMENT NUMBER
								MOMENT					SHEAR						MOMENT					
							LIVELOAD FACTORS	DISTRIBUTION FACTORS (DF)	RATING FACTOR	SPAN	GIRDER LOCATION	DISTANCE FROM LEFT END OF SPAN (ft)	DISTRIBUTION FACTORS (DF)	RATING FACTOR	SPAN	GIRDER LOCATION	DISTANCE FROM LEFT END OF SPAN (ft)	LIVELOAD FACTORS	DISTRIBUTION FACTORS (DF)	RATING FACTOR	SPAN	GIRDER LOCATION	DISTANCE FROM LEFT END OF SPAN (ft)	
DESIGN LOAD RATING		HL-93(Inv)	N/A	1	1.319	--	1.75	0.278	1.76	40'	EL	19.5	0.549	**1.32**	40'	EL	**1.95**	0.80	0.278	1.55	40'	EL	19.5	
		HL-93(Opr)	N/A	--	1.709	--	1.35	0.278	2.28	40'	EL	19.5	0.549	1.71	40'	EL	1.95	N/A	--	--	--	--	--	
		HS-20(Inv)	36.000	2	1.540	55.449	1.75	0.278	2.21	40'	EL	19.5	0.549	**1.54**	40'	EL	**1.95**	0.80	0.278	1.94	40'	EL	19.5	
		HS-20(Opr)	36.000	--	1.997	71.878	1.35	0.278	2.86	40'	EL	19.5	0.549	2	40'	EL	1.95	N/A	--	--	--	--	--	
LEGAL LOAD RATING	SV	SNSH	13.500	--	3.606	48.687	1.4	0.278	5.1	40'	EL	19.5	0.549	4.13	40'	EL	1.95	0.80	0.278	3.61	40'	EL	19.5	
		SNGARBS2	20.000	--	2.964	59.289	1.4	0.278	4.19	40'	EL	15.6	0.549	3.07	40'	EL	1.95	0.80	0.278	2.96	40'	EL	19.5	
		SNAGRIS2	22.000	--	2.906	63.929	1.4	0.278	4.09	40'	EL	15.6	0.549	2.91	40'	EL	1.95	0.80	0.278	2.92	40'	EL	15.6	
		SNCOTTS3	27.250	--	1.803	49.125	1.4	0.278	2.55	40'	EL	19.5	0.549	2.07	40'	EL	1.95	0.80	0.278	1.80	40'	EL	19.5	
		SNAGGRS4	34.925	--	1.623	56.667	1.4	0.278	2.29	40'	EL	19.5	0.549	1.82	40'	EL	1.95	0.80	0.278	1.62	40'	EL	19.5	
		SNS5A	35.550	--	1.578	56.107	1.4	0.278	2.23	40'	EL	19.5	0.549	1.9	40'	EL	1.95	0.80	0.278	1.58	40'	EL	19.5	
		SNS6A	39.950	--	1.502	59.992	1.4	0.278	2.12	40'	EL	19.5	0.549	1.77	40'	EL	1.95	0.80	0.278	1.50	40'	EL	19.5	
		SNS7B	42.000	3	1.432	60.149	1.4	0.278	2.02	40'	EL	19.5	0.549	1.81	40'	EL	1.95	0.80	0.278	**1.43**	40'	EL	**19.5**	
	TTST	TNAGRIT3	33.000	--	1.848	60.976	1.4	0.278	2.61	40'	EL	19.5	0.549	2.08	40'	EL	1.95	0.80	0.278	1.85	40'	EL	19.5	
		TNT4A	33.075	--	1.872	61.901	1.4	0.278	2.65	40'	EL	19.5	0.549	1.98	40'	EL	1.95	0.80	0.278	1.87	40'	EL	19.5	
		TNT6A	41.600	--	1.587	66.032	1.4	0.278	2.24	40'	EL	19.5	0.549	1.94	40'	EL	1.95	0.80	0.278	1.59	40'	EL	19.5	
		TNT7A	42.000	--	1.627	68.354	1.4	0.278	2.3	40'	EL	19.5	0.549	1.79	40'	EL	1.95	0.80	0.278	1.63	40'	EL	19.5	
		TNT7B	42.000	--	1.664	69.888	1.4	0.278	2.35	40'	EL	19.5	0.549	1.72	40'	EL	1.95	0.80	0.278	1.66	40'	EL	19.5	
		TNAGRIT4	43.000	--	1.619	69.61	1.4	0.278	2.28	40'	EL	15.6	0.549	1.65	40'	EL	1.95	0.80	0.278	1.62	40'	EL	19.5	
		TNAGT5A	45.000	--	1.498	67.412	1.4	0.278	2.12	40'	EL	19.5	0.549	1.71	40'	EL	1.95	0.80	0.278	1.50	40'	EL	19.5	
		TNAGT5B	45.000	--	1.455	65.486	1.4	0.278	2.06	40'	EL	19.5	0.549	1.56	40'	EL	1.95	0.80	0.278	1.46	40'	EL	19.5	

LOAD FACTORS:

DESIGN LOAD RATING FACTORS	LIMIT STATE	γ_{DC}	γ_{DW}
	STRENGTH I	1.25	1.50
	SERVICE III	1.00	1.00

NOTES:

MINIMUM RATING FACTORS ARE BASED ON THE STRENGTH I AND SERVICE III LIMIT STATES.

ALLOWABLE STRESSES FOR SERVICE III LIMIT STATE ARE AS REQUIRED FOR DESIGN.

COMMENTS:

1.
2.
3.
4.

(#) CONTROLLING LOAD RATING

(1) DESIGN LOAD RATING (HL-93)

(2) DESIGN LOAD RATING (HS-20)

(3) LEGAL LOAD RATING **

** SEE CHART FOR VEHICLE TYPE

GIRDER LOCATION

I - INTERIOR GIRDER
EL - EXTERIOR LEFT GIRDER
ER - EXTERIOR RIGHT GIRDER

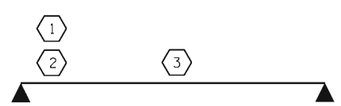

LRFR SUMMARY

FOR SPAN 'A' & 'C'

PROJECT NO. 17BP.5.R.35

WAKE COUNTY

STATION: 13+70.00 -L-

STATE OF NORTH CAROLINA
DEPARTMENT OF TRANSPORTATION
RALEIGH

STANDARD
LRFR SUMMARY FOR 40' CORED SLAB UNIT 90° SKEW
(NON-INTERSTATE TRAFFIC)

WETHERILL ENGINEERING
559 Jones Franklin Rd. Suite 164
Raleigh, N.C. 27606
Bus: 919 851 8077
Fax: 919 851 8107
License: F-0377
TRANSPORTATION PLANNING/DESIGN - BRIDGE/STRUCTURE DESIGN
CIVIL/SITE DESIGN - GIS/GPS - CONSTRUCTION OBSERVATION

NORTH CAROLINA PROFESSIONAL SEAL 22072 ENGINEER JOHN ARTHUR DILWORTH 11-2-13

REVISIONS								SHEET NO.
NO.	BY:	DATE:	NO.	BY:	DATE:			S-3
1			3					TOTAL SHEETS
2			4					19

STD. NO. 21LRFR1_90S_40L

ASSEMBLED BY : J. PENDERGRAFT DATE : 9-12
CHECKED BY : J. DILWORTH DATE : 9-12
DRAWN BY : CVC 6/10
CHECKED BY : DNS 6/10

P:\2012\Wake #201\Structures\DGN\BR #201 lrfr.dgn
11/21/2013 7:13:37 AM

LOAD AND RESISTANCE FACTOR RATING (LRFD) SUMMARY FOR PRESTRESSED CONCRETE GIRDERS

LEVEL		VEHICLE	WEIGHT (W) (TONS)	CONTROLLING LOAD RATING	MINIMUM RATING FACTORS (RF)	TONS = W X RF	STRENGTH I LIMIT STATE											SERVICE III LIMIT STATE						COMMENT NUMBER
								MOMENT					SHEAR						MOMENT					
							LIVELOAD FACTORS	DISTRIBUTION FACTORS (DF)	RATING FACTOR	SPAN	GIRDER LOCATION	DISTANCE FROM LEFT END OF SPAN (ft)	DISTRIBUTION FACTORS (DF)	RATING FACTOR	SPAN	GIRDER LOCATION	DISTANCE FROM LEFT END OF SPAN (ft)	LIVELOAD FACTORS	DISTRIBUTION FACTORS (DF)	RATING FACTOR	SPAN	GIRDER LOCATION	DISTANCE FROM LEFT END OF SPAN (ft)	
DESIGN LOAD RATING		HL-93(Inv)	N/A	1	1.394	--	1.75	0.276	1.57	50'	EL	24.5	0.531	**1.39**	50'	EL	**2.45**	0.80	0.276	1.44	50'	EL	24.5	
		HL-93(Opr)	N/A	--	1.807	--	1.35	0.276	2.03	50'	EL	24.5	0.531	1.81	50'	EL	2.45	N/A	--	--	--	--	--	
		HS-20(Inv)	36.000	2	1.667	60.007	1.75	0.276	1.95	50'	EL	24.5	0.531	**1.67**	50'	EL	**2.45**	0.80	0.276	1.79	50'	EL	24.5	
		HS-20(Opr)	36.000	--	2.161	77.787	1.35	0.276	2.52	50'	EL	24.5	0.531	2.16	50'	EL	2.45	N/A	--	--	--	--	--	
LEGAL LOAD RATING	SV	SNSH	13.500	--	3.635	49.079	1.4	0.276	4.95	50'	EL	24.5	0.531	4.7	50'	EL	2.45	0.80	0.276	3.64	50'	EL	24.5	
		SNGARBS2	20.000	--	2.871	57.42	1.4	0.276	3.91	50'	EL	24.5	0.531	3.42	50'	EL	2.45	0.80	0.276	2.87	50'	EL	24.5	
		SNAGRIS2	22.000	--	2.778	61.109	1.4	0.276	3.78	50'	EL	19.6	0.531	3.21	50'	EL	2.45	0.80	0.276	2.78	50'	EL	24.5	
		SNCOTTS3	27.250	--	1.814	49.418	1.4	0.276	2.47	50'	EL	24.5	0.531	2.36	50'	EL	2.45	0.80	0.276	1.81	50'	EL	24.5	
		SNAGGRS4	34.925	--	1.577	55.063	1.4	0.276	2.15	50'	EL	24.5	0.531	2.01	50'	EL	2.45	0.80	0.276	1.58	50'	EL	24.5	
		SNS5A	35.550	--	1.537	54.657	1.4	0.276	2.09	50'	EL	24.5	0.531	2.07	50'	EL	2.45	0.80	0.276	1.54	50'	EL	24.5	
		SNS6A	39.950	--	1.438	57.43	1.4	0.276	1.96	50'	EL	24.5	0.531	1.91	50'	EL	2.45	0.80	0.276	1.44	50'	EL	24.5	
		SNS7B	42.000	--	1.370	57.54	1.4	0.276	1.87	50'	EL	24.5	0.531	1.91	50'	EL	2.45	0.80	0.276	1.37	50'	EL	24.5	
	TTST	TNAGRIT3	33.000	--	1.761	58.118	1.4	0.276	2.4	50'	EL	24.5	0.531	2.25	50'	EL	2.45	0.80	0.276	1.76	50'	EL	24.5	
		TNT4A	33.075	--	1.777	58.759	1.4	0.276	2.42	50'	EL	24.5	0.531	2.17	50'	EL	2.45	0.80	0.276	1.78	50'	EL	24.5	
		TNT6A	41.600	--	1.480	61.558	1.4	0.276	2.01	50'	EL	24.5	0.531	2.08	50'	EL	2.45	0.80	0.276	1.48	50'	EL	24.5	
		TNT7A	42.000	--	1.502	63.087	1.4	0.276	2.05	50'	EL	24.5	0.531	1.94	50'	EL	2.45	0.80	0.276	1.50	50'	EL	24.5	
		TNT7B	42.000	--	1.566	65.773	1.4	0.276	2.13	50'	EL	24.5	0.531	1.84	50'	EL	2.45	0.80	0.276	1.57	50'	EL	24.5	
		TNAGRIT4	43.000	--	1.486	63.902	1.4	0.276	2.02	50'	EL	24.5	0.531	1.77	50'	EL	2.45	0.80	0.276	1.49	50'	EL	24.5	
		TNAGT5A	45.000	--	1.388	62.47	1.4	0.276	1.89	50'	EL	24.5	0.531	1.8	50'	EL	2.45	0.80	0.276	1.39	50'	EL	24.5	
		TNAGT5B	45.000	3	1.360	61.206	1.4	0.276	1.85	50'	EL	24.5	0.531	1.68	50'	EL	2.45	0.80	0.276	**1.36**	50'	EL	**24.5**	

LOAD FACTORS:

DESIGN LOAD RATING FACTORS	LIMIT STATE	γ_{DC}	γ_{DW}
	STRENGTH I	1.25	1.50
	SERVICE III	1.00	1.00

NOTES:

MINIMUM RATING FACTORS ARE BASED ON THE STRENGTH I AND SERVICE III LIMIT STATES.

ALLOWABLE STRESSES FOR SERVICE III LIMIT STATE ARE AS REQUIRED FOR DESIGN.

COMMENTS:

1.
2.
3.
4.

(#) CONTROLLING LOAD RATING

(1) DESIGN LOAD RATING (HL-93)

(2) DESIGN LOAD RATING (HS-20)

(3) LEGAL LOAD RATING **

** SEE CHART FOR VEHICLE TYPE

GIRDER LOCATION

I - INTERIOR GIRDER
EL - EXTERIOR LEFT GIRDER
ER - EXTERIOR RIGHT GIRDER

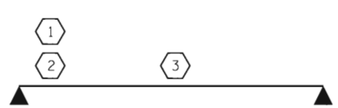

LRFR SUMMARY

FOR SPAN 'B'

PROJECT NO. 17BP.5.R.35

WAKE COUNTY

STATION: 13+70.00 -L-

STATE OF NORTH CAROLINA
DEPARTMENT OF TRANSPORTATION
RALEIGH

STANDARD

LRFR SUMMARY FOR 50' CORED SLAB UNIT 90° SKEW

(NON-INTERSTATE TRAFFIC)

NORTH CAROLINA PROFESSIONAL SEAL 22072 ENGINEER JOHN ARTHUR DILWORTH 12/13

ETHERILL ENGINEERING
559 Jones Franklin Rd. Suite 164
Raleigh, N.C. 27606
Bus: 919 851 8077
Fax: 919 851 8107
License: F-0377

TRANSPORTATION PLANNING/DESIGN - BRIDGE/STRUCTURE DESIGN
CIVIL/SITE DESIGN - GIS/GPS - CONSTRUCTION OBSERVATION

REVISIONS						SHEET NO.
NO.	BY:	DATE:	NO.	BY:	DATE:	S-4
1			3			TOTAL SHEETS
2			4			19

STD. NO. 21LRFR1_90S_50L

ASSEMBLED BY : J. PENDERGRAFT DATE : 9-12
CHECKED BY : J. DILWORTH DATE : 9-12

DRAWN BY : CVC 6/10
CHECKED BY : DNS 6/10

P:\2012\Wake #201\Structures\DGN\BR #201 lrfr.dgn
11/21/2013 7:13:48 AM

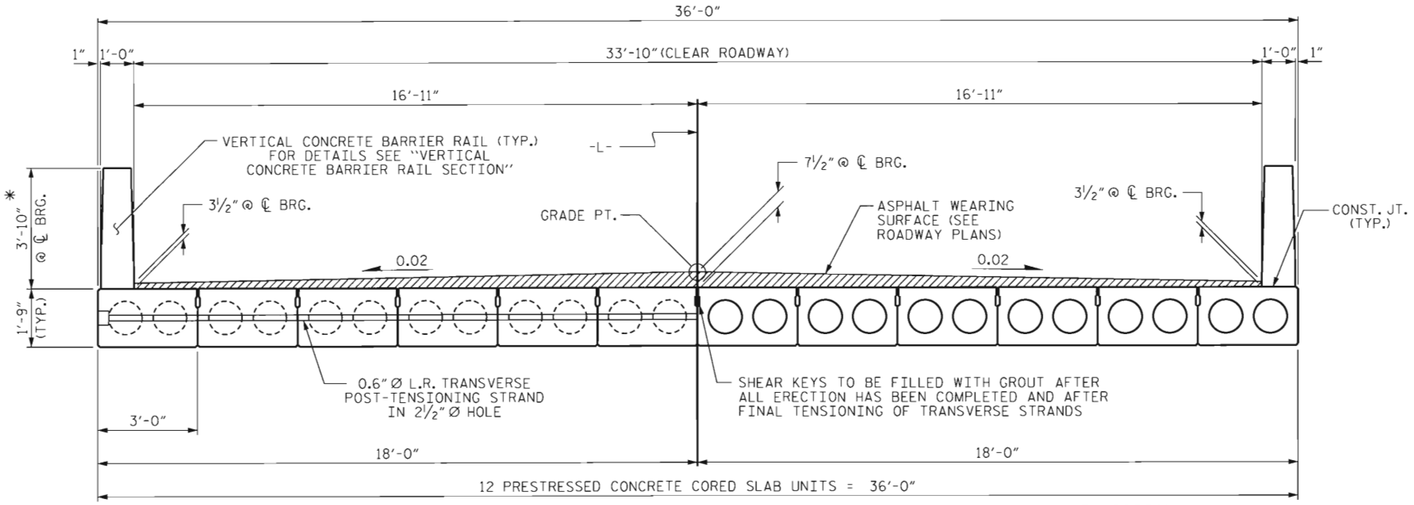

HALF SECTION
AT INTERMEDIATE DIAPHRAGMS

HALF SECTION
THROUGH VOIDS

TYPICAL SECTION

✳ - THE MAXIMUM BARRIER RAIL HEIGHT AND ASPHALT THICKNESS IS SHOWN. THE HEIGHT OF THE BARRIER RAIL AND ASPHALT THICKNESS VARIES WHILE THE TOP OF THE BARRIER RAIL FOLLOWS THE PROFILE OF THE GUTTERLINE. FOR RAIL HEIGHT DETAILS AND ASPHALT THICKNESS SEE THE "VERTICAL CONCRETE BARRIER RAIL SECTION" DETAIL.

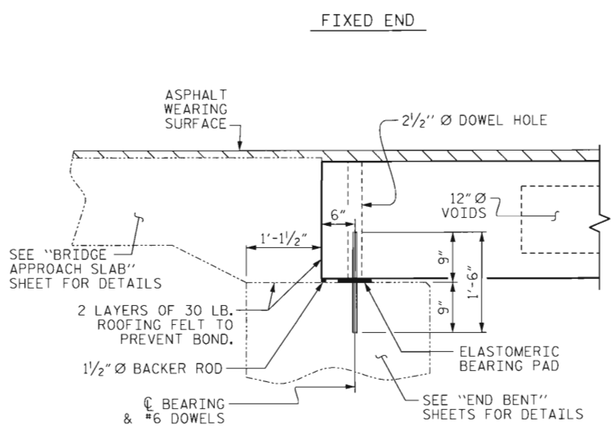

SECTION AT END BENT

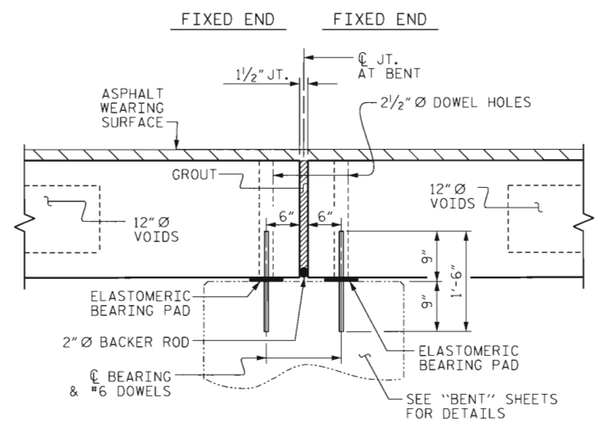

SECTION AT BENT

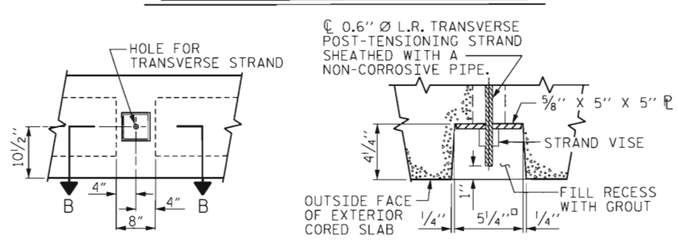

ELEVATION VIEW

SECTION B-B

GROUTED RECESS AT END OF POST-TENSIONED STRAND OF CORED SLABS

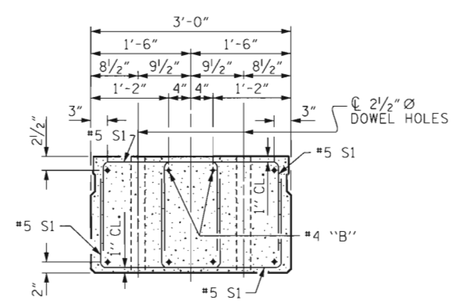

END ELEVATION

SHOWING PLACEMENT OF DOUBLE STIRRUPS AND LOCATION OF DOWEL HOLES. (STRAND LAYOUT NOT SHOWN.) INTERIOR SLAB UNIT SHOWN-EXTERIOR SLAB UNIT SIMILAR EXCEPT SHEAR KEY LOCATION.

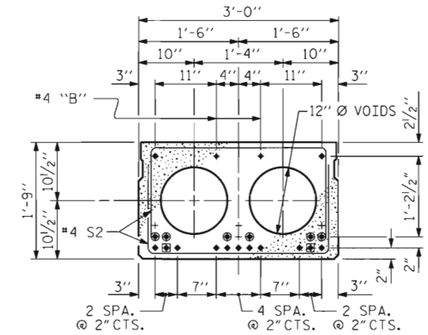

INTERIOR SLAB SECTION
(40' UNIT)
(13 STRANDS REQUIRED)

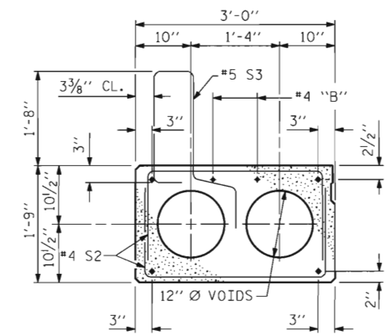

EXT. SLAB SECTION

(FOR PRESTRESSED STRAND LAYOUT, SEE INTERIOR SLAB SECTION.)

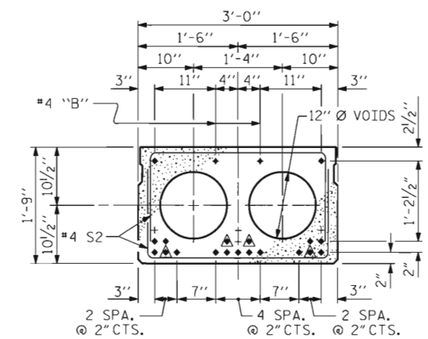

INTERIOR SLAB SECTION
(50' UNIT)
(19 STRANDS REQUIRED)

0.6" Ø LOW RELAXATION STRAND LAYOUT

▲ BOND SHALL BE BROKEN ON THESE STRANDS FOR A DISTANCE OF 6'-0" FROM END OF CORED SLAB UNIT. SEE STANDARD SPECIFICATIONS, ARTICLE 1078-7.

◨ BOND SHALL BE BROKEN ON THESE STRANDS FOR A DISTANCE OF 2'-0" FROM END OF CORED SLAB UNIT. SEE STANDARD SPECIFICATIONS, ARTICLE 1078-7.

◉ OPTIONAL FULL LENGTH DEBONDED STRANDS. THESE STRANDS ARE NOT REQUIRED. IF THE FABRICATOR CHOOSES TO INCLUDE THESE STRANDS IN THE CORED SLAB UNIT, THE STRANDS SHALL BE DEBONDED FOR THE FULL LENGTH OF THE UNIT AT NO ADDITIONAL COST. SEE STANDARD SPECIFICATIONS, ARTICLE 1078-7.

DEBONDING LEGEND

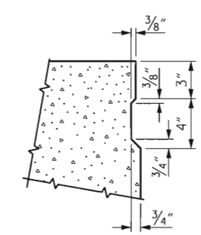

SHEAR KEY DETAIL

NOTE: OMIT SHEAR KEY ON OUTSIDE FACE OF EXTERIOR CORED SLABS.

PROJECT NO. 17BP.5.R.35
WAKE COUNTY
STATION: 13+70.00 -L-

SHEET 1 OF 4

STATE OF NORTH CAROLINA
DEPARTMENT OF TRANSPORTATION
RALEIGH

STANDARD
3'-0" X 1'-9"
PRESTRESSED CONCRETE
CORED SLAB UNIT
90° SKEW

NORTH CAROLINA PROFESSIONAL SEAL 22072 ENGINEER JOHN ARTHUR DILWORTH
1-24-12

WETHERILL ENGINEERING
559 Jones Franklin Rd. Suite 164
Raleigh, N.C. 27606
Bus: 919 851 8077
Fax: 919 851 8107
License: F-0377
TRANSPORTATION PLANNING/DESIGN - BRIDGE/STRUCTURE DESIGN
CIVIL/SITE DESIGN - GIS/GPS - CONSTRUCTION OBSERVATION

REVISIONS						
NO.	BY:	DATE:	NO.	BY:	DATE:	
1			3			
2			4			

SHEET NO. S-5
TOTAL SHEETS 19

STD. NO. 21" PCS2_36_90S

ASSEMBLED BY : J. PENDERGRAFT DATE : 9-10-12
CHECKED BY : J. DILWORTH DATE : 9-10-12
DRAWN BY : DGE 5/09 REV. 12/11 MAA/AAC
CHECKED BY : BCH 6/09

P:\2012\Wake #201\Structures\DGN\BR #201_STR_cs1.dgn
11/21/2013 7:14:41 AM

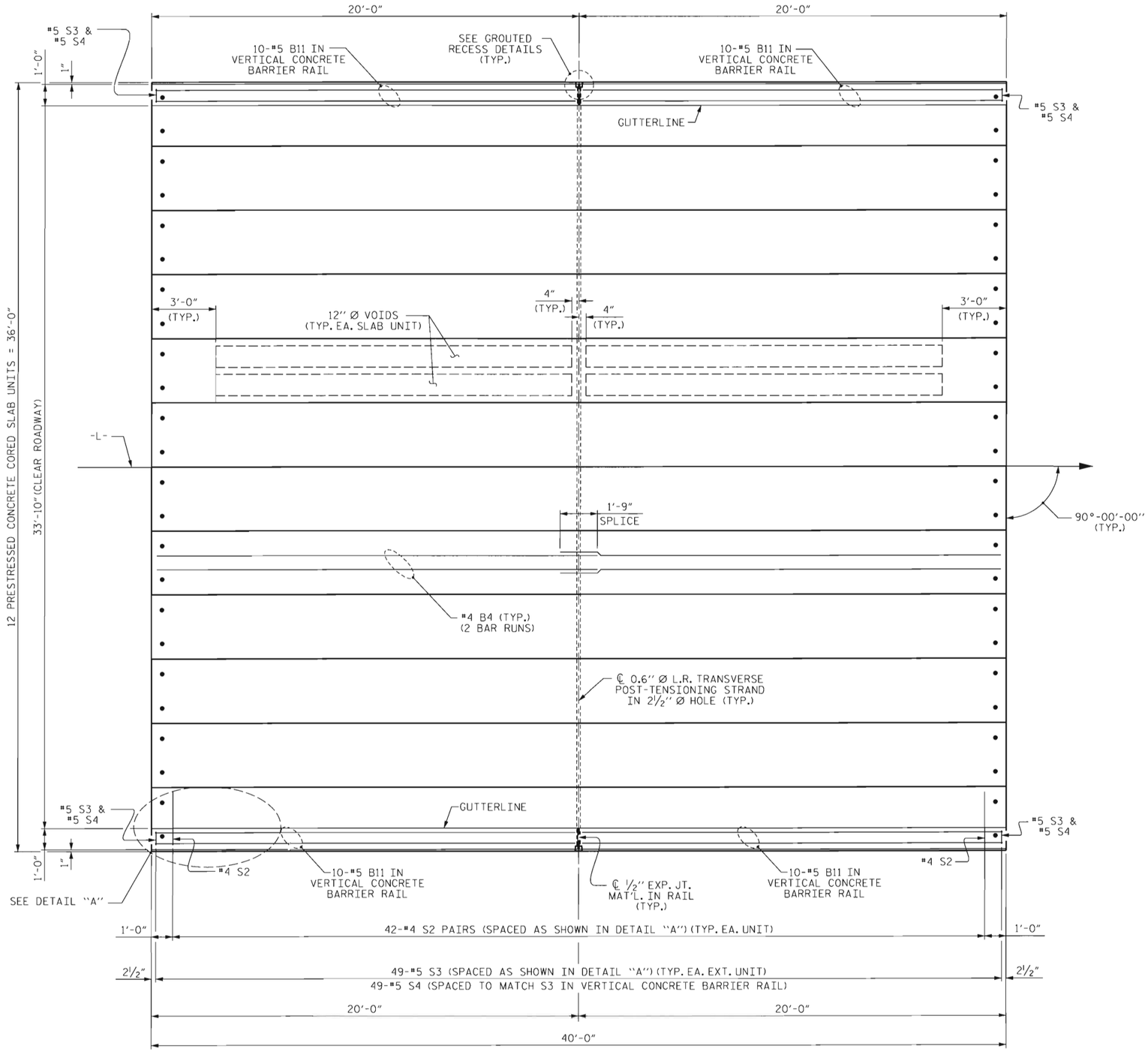

PLAN OF UNIT

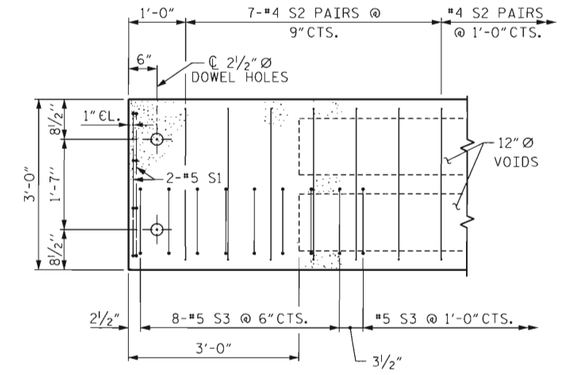

DETAIL "A"

NOTE: EXTERIOR UNIT SHOWN - INTERIOR UNIT SIMILAR EXCEPT OMIT #5 S3 BARS.

PROJECT NO. 17BP.5.R.35

WAKE COUNTY

STATION: 13+70.00 -L-

SHEET 2 OF 4

STATE OF NORTH CAROLINA
DEPARTMENT OF TRANSPORTATION
RALEIGH

PLAN OF 40' UNIT 33'-10" CLEAR ROADWAY 90° SKEW

REVISIONS								SHEET NO.
NO.	BY:	DATE:	NO.	BY:	DATE:			S-6
1			3					TOTAL SHEETS
2			4					19

NORTH CAROLINA PROFESSIONAL SEAL 22072 ENGINEER JOHN ARTHUR DILWORTH 11-21-13

WETHERILL ENGINEERING
559 Jones Franklin Rd. Suite 164
Raleigh, N.C. 27606
Bus: 919 851 8077
Fax: 919 851 8107
License: F-0377
TRANSPORTATION PLANNING/DESIGN - BRIDGE/STRUCTURE DESIGN
CNIL/SITE DESIGN - GIS/GPS - CONSTRUCTION OBSERVATION

ASSEMBLED BY : J. PENDERGRAFT		DATE :	9-12
CHECKED BY : J. DILWORTH		DATE :	9-12
DRAWN BY : DGE	5/09	REV. 12/5/11	MAA/AAC
CHECKED BY: BCH	6/09		

STD. NO. 21" PCS_36_90S_40L

P:\2012\Wake #2011\Structures\DGN\BR #2011_STR_PS1.dgn
11/21/2013 8:30:57 AM

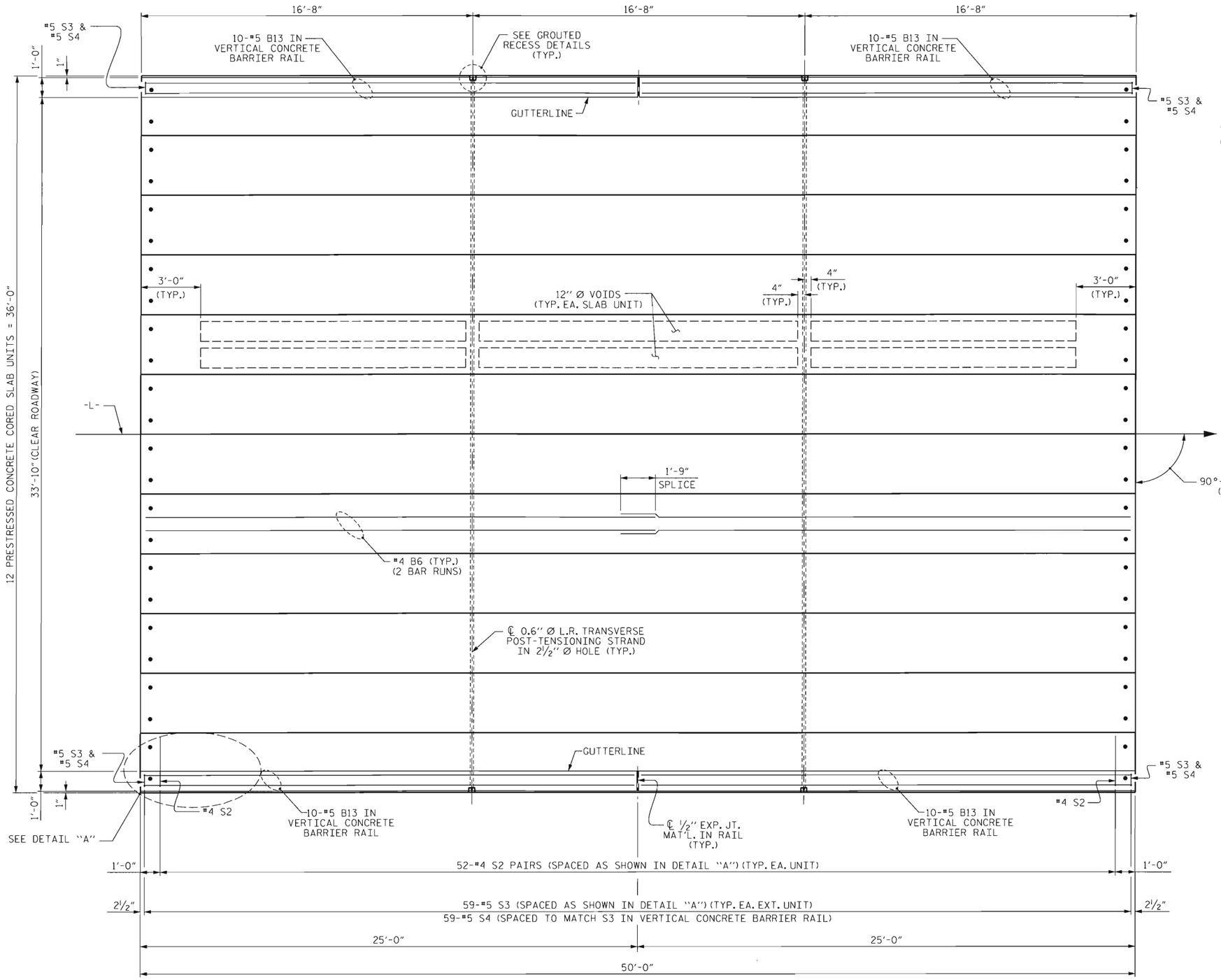

PLAN OF UNIT

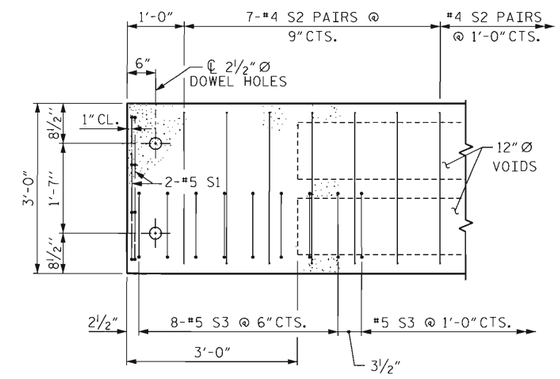

DETAIL "A"

NOTE: EXTERIOR UNIT SHOWN - INTERIOR UNIT SIMILAR EXCEPT OMIT #5 S3 BARS.

PROJECT NO. 17BP.5.R.35

WAKE COUNTY

STATION: 13+70.00 -L-

SHEET 3 OF 4

STATE OF NORTH CAROLINA
DEPARTMENT OF TRANSPORTATION
RALEIGH

PLAN OF 50' UNIT
33'-10" CLEAR ROADWAY
90° SKEW

ASSEMBLED BY : J. PENDERGRAFT	DATE : 9-12		
CHECKED BY : J. DILWORTH	DATE : 9-12		
DRAWN BY : DGE 5/09	REV. 12/5/11 MAA/AAC		
CHECKED BY: BCH 6/09			

NORTH CAROLINA PROFESSIONAL SEAL 22072 ENGINEER JOHN ARTHUR DILWORTH 1-2-13

WETHERILL ENGINEERING
559 Jones Franklin Rd. Suite 164
Raleigh, N.C. 27606
Bus: 919 851 8077
Fax: 919 851 8107
License: F-0377
TRANSPORTATION PLANNING/DESIGN - BRIDGE/STRUCTURE DESIGN
CIVIL/SITE DESIGN - GIS/GPS - CONSTRUCTION OBSERVATION

REVISIONS						
NO.	BY:	DATE:	NO.	BY:	DATE:	
1			3			
2			4			

SHEET NO. S-7
TOTAL SHEETS 19

STD. NO. 21" PCS_36_90S_50L

P:\2012\Wake #201\Structures\DGN\BR #201_STR_PS1.dgn
11/21/2013 8:31:12 AM

BILL OF MATERIAL FOR ONE 40' CORED SLAB UNIT

BAR	NUMBER	SIZE	TYPE	EXTERIOR UNIT LENGTH	EXTERIOR UNIT WEIGHT	INTERIOR UNIT LENGTH	INTERIOR UNIT WEIGHT
B4	4	#4	STR	20'-9"	55	20'-9"	55
S1	8	#5	3	4'-3"	35	4'-3"	35
S2	84	#4	3	5'-4"	299	5'-4"	299
* S3	49	#5	1	6'-2"	315		
REINFORCING STEEL			LBS.		389		389
* EPOXY COATED REINFORCING STEEL			LBS.		315		
6500 P.S.I. CONCRETE			CU. YDS.		5.8		5.8
0.6" Ø L.R. STRANDS			No.		13		13

BILL OF MATERIAL FOR ONE 50' CORED SLAB UNIT

BAR	NUMBER	SIZE	TYPE	EXTERIOR UNIT LENGTH	EXTERIOR UNIT WEIGHT	INTERIOR UNIT LENGTH	INTERIOR UNIT WEIGHT
B6	4	#4	STR	25'-9"	69	25'-9"	69
S1	8	#5	3	4'-3"	35	4'-3"	35
S2	104	#4	3	5'-4"	371	5'-4"	371
* S3	59	#5	1	6'-2"	379		
REINFORCING STEEL			LBS.		475		475
* EPOXY COATED REINFORCING STEEL			LBS.		379		
6500 P.S.I. CONCRETE			CU. YDS.		7.1		7.1
0.6" Ø L.R. STRANDS			No.		19		19

GUTTERLINE ASPHALT THICKNESS & RAIL HEIGHT

33'-10" CLEAR ROADWAY	ASPHALT OVERLAY THICKNESS @ MID-SPAN	RAIL HEIGHT @ MID-SPAN
	NORMAL CROWN SECTION	
40' UNITS	2 3/8"	3'-8 7/8"
50' UNITS	1 1/4"	3'-7 3/4"

DEAD LOAD DEFLECTION AND CAMBER

	3'-0" x 1'-9"
40' CORED SLAB UNIT	0.6" Ø L.R. STRAND
CAMBER (SLAB ALONE IN PLACE)	1 1/4' ↑
DEFLECTION DUE TO SUPERIMPOSED DEAD LOAD**	1/8" ↓
FINAL CAMBER	1 1/8" ↑

** INCLUDES FUTURE WEARING SURFACE

DEAD LOAD DEFLECTION AND CAMBER

	3'-0" x 1'-9"
50' CORED SLAB UNIT	0.6" Ø L.R. STRAND
CAMBER (SLAB ALONE IN PLACE)	2 1/2" ↑
DEFLECTION DUE TO SUPERIMPOSED DEAD LOAD**	1/4" ↓
FINAL CAMBER	2 1/4" ↑

** INCLUDES FUTURE WEARING SURFACE

GRADE 270 STRANDS

	0.6" Ø L.R.
AREA (SQUARE INCHES)	0.217
ULTIMATE STRENGTH (LBS. PER STRAND)	58,600
APPLIED PRESTRESS (LBS. PER STRAND)	43,950

BAR TYPES

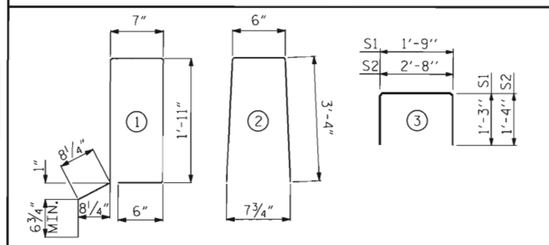

ALL BAR DIMENSIONS ARE OUT TO OUT

BILL OF MATERIAL FOR VERTICAL CONCRETE BARRIER RAIL

BAR	BARS PER PAIR OF EXTERIOR UNITS	TOTAL NO.	SIZE	TYPE	LENGTH	WEIGHT
	40' UNIT					
* B11	40	80	#5	STR	19'-7"	1634
* S4	98	196	#5	2	7'-2"	1465
* EPOXY COATED REINFORCING STEEL				LBS.		3099
CLASS AA CONCRETE				CU.YDS.		21.0
TOTAL VERTICAL CONCRETE BARRIER RAIL				LN. FT.		160.25

BILL OF MATERIAL FOR VERTICAL CONCRETE BARRIER RAIL

BAR	BARS PER PAIR OF EXTERIOR UNITS	TOTAL NO.	SIZE	TYPE	LENGTH	WEIGHT
	50' UNIT					
* B13	40	40	#5	STR	24'-7"	1026
* S4	118	118	#5	2	7'-2"	882
* EPOXY COATED REINFORCING STEEL				LBS.		1908
CLASS AA CONCRETE				CU.YDS.		13.1
TOTAL VERTICAL CONCRETE BARRIER RAIL				LN. FT.		100.25

CORED SLABS REQUIRED

	NUMBER	LENGTH	TOTAL LENGTH
40' UNIT			
EXTERIOR C.S.	4	40'-0"	160'-0"
INTERIOR C.S.	20	40'-0"	800'-0"
TOTAL	24		960'-0"

CORED SLABS REQUIRED

	NUMBER	LENGTH	TOTAL LENGTH
50' UNIT			
EXTERIOR C.S.	2	50'-0"	100'-0"
INTERIOR C.S.	10	50'-0"	500'-0"
TOTAL	12		600'-0"

CONCRETE RELEASE STRENGTH

UNIT	PSI
40' UNITS	4000
50' UNITS	4900

NOTES

ALL PRESTRESSING STRANDS SHALL BE 7-WIRE LOW RELAXATION GRADE 270 STRANDS AND SHALL CONFORM TO AASHTO M203 EXCEPT FOR SAMPLING REQUIREMENTS WHICH SHALL BE IN ACCORDANCE WITH THE STANDARD SPECIFICATIONS.

ALL REINFORCING STEEL CAST WITH THE CORED SLAB SECTIONS SHALL BE GRADE 60 AND SHALL BE INCLUDED IN THE UNIT PRICE BID FOR PRESTRESSED CONCRETE CORED SLABS.

RECESSES FOR TRANSVERSE STRANDS SHALL BE GROUTED AFTER THE TENSIONING OF THE STRANDS.

THE 2 1/2" Ø DOWEL HOLES AT FIXED ENDS OF SLAB SECTIONS SHALL BE FILLED WITH NON-SHRINK GROUT.

THE BACKER RODS SHALL CONFORM TO THE REQUIREMENTS OF TYPE M BOND BREAKER. SEE SECTION 1028 OF THE STANDARD SPECIFICATIONS.

WHEN CORED SLABS ARE CAST, AN INTERNAL HOLD-DOWN SYSTEM SHALL BE EMPLOYED TO PREVENT VOIDS FROM RISING OR MOVING SIDEWAYS. AT LEAST SIX WEEKS PRIOR TO CASTING CORED SLABS, THE CONTRACTOR SHALL SUBMIT TO THE ENGINEER FOR REVIEW AND COMMENT, DETAILED DRAWINGS OF THE PROPOSED HOLD-DOWN SYSTEM. IN ADDITION TO STRUCTURAL DETAILS, LOCATION AND SPACING OF THE HOLD-DOWNS SHALL BE INDICATED.

ALL REINFORCING STEEL IN THE VERTICAL CONCRETE BARRIER RAIL SHALL BE EPOXY COATED.

PRESTRESSING STRANDS SHALL BE CUT FLUSH WITH THE CORED SLAB UNIT ENDS.

APPLY EPOXY PROTECTIVE COATING TO CORED SLAB UNIT ENDS.

GROOVED CONTRACTION JOINTS, 1/2" IN DEPTH, SHALL BE TOOLED IN ALL EXPOSED FACES OF THE BARRIER RAIL AND IN ACCORDANCE WITH ARTICLE 825-10(B) OF THE STANDARD SPECIFICATIONS. A CONTRACTION JOINT SHALL BE LOCATED AT EACH THIRD POINT BETWEEN BARRIER RAIL EXPANSION JOINTS. ONLY ONE CONTRACTION JOINT IS REQUIRED AT MIDPOINT OF BARRIER RAIL SEGMENTS LESS THAN 20 FEET IN LENGTH AND NO CONTRACTION JOINTS ARE REQUIRED FOR THOSE SEGMENTS LESS THAN 10 FEET IN LENGTH.

TRANSVERSE POST TENSIONING OF THE CORED SLAB UNITS SHALL BE DONE IN ACCORDANCE WITH THE STANDARD SPECIFICATIONS.

THE TRANSFER OF LOAD FROM THE ANCHORAGES TO THE CORED SLAB UNIT SHALL BE DONE WHEN THE CONCRETE HAS REACHED A COMPRESSIVE STRENGTH OF NOT LESS THAN THE REQUIRED STRENGTH SHOWN IN THE "CONCRETE RELEASE STRENGTH" TABLE.

FOR GROUT FOR STRUCTURES, SEE SPECIAL PROVISIONS.

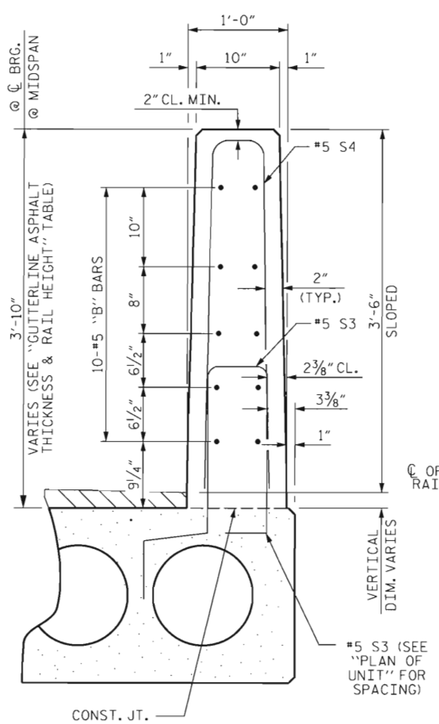

VERTICAL CONCRETE BARRIER RAIL SECTION

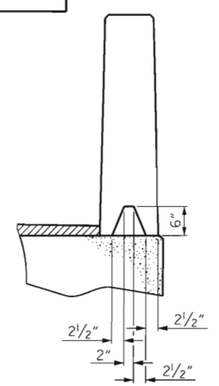

SECTION S-S
AT DAM IN OPEN JOINT
(THIS IS TO BE USED ONLY WHEN SLIP FORM IS USED)

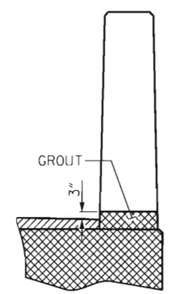

SECTION T-T
AT OPEN JOINT AT BENT
(THIS IS TO BE USED WHERE FOAM JOINT IS NOT USED)

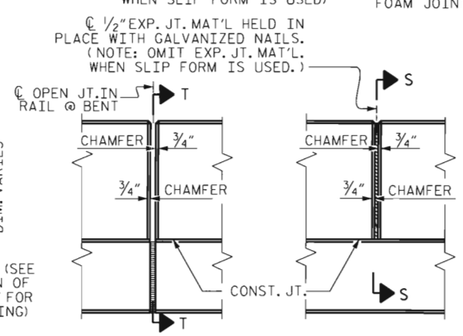

ELEVATION AT EXPANSION JOINTS

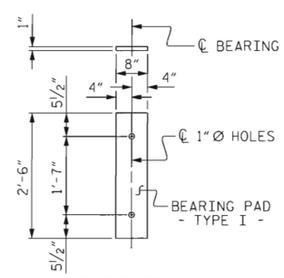

FIXED END
(TYPE I - 72 REQ'D)

ELASTOMERIC BEARING DETAILS

ELASTOMER IN ALL BEARINGS SHALL BE 50 DUROMETER HARDNESS.

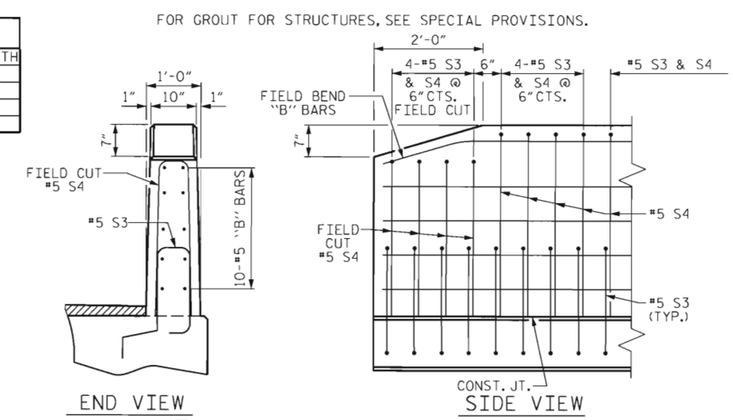

END VIEW

SIDE VIEW

END OF RAIL DETAILS

PROJECT NO. 17BP.5.R.35
WAKE COUNTY
STATION: 13+70.00 -L-

SHEET 4 OF 4

STATE OF NORTH CAROLINA
DEPARTMENT OF TRANSPORTATION
RALEIGH

STANDARD
3'-0" X 1'-9"
PRESTRESSED CONCRETE CORED SLAB UNIT

REVISIONS								SHEET NO.
NO.	BY:	DATE:	NO.	BY:	DATE:			S-8
1			3					TOTAL SHEETS
2			4					19

STD. NO. 21" PCS3_36_90S

ASSEMBLED BY : J. PENDERGRAFT DATE : 9-12
CHECKED BY : J. DILWORTH DATE : 9-12
DRAWN BY : DGE 5/09
CHECKED BY : BCH 6/09
REV. 12/11 MAA/AAC

NORTH CAROLINA PROFESSIONAL SEAL 22072 ENGINEER JOHN ARTHUR DILWORTH 11-21-13

WETHERILL ENGINEERING
559 Jones Franklin Rd. Suite 164
Raleigh, N.C. 27606
Bus: 919 851 8077
Fax: 919 851 8107
License: F-0377
TRANSPORTATION PLANNING/DESIGN - BRIDGE/STRUCTURE DESIGN
CIVIL/SITE DESIGN - GIS/GPS - CONSTRUCTION OBSERVATION

P:\2012\Wake #201\Structures\DGN\BR #201_STR_CS2.dgn
11/21/2013 7:18:26 AM

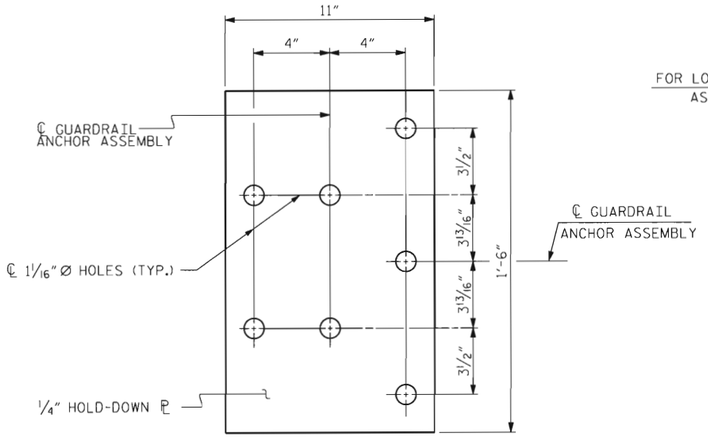

PLAN

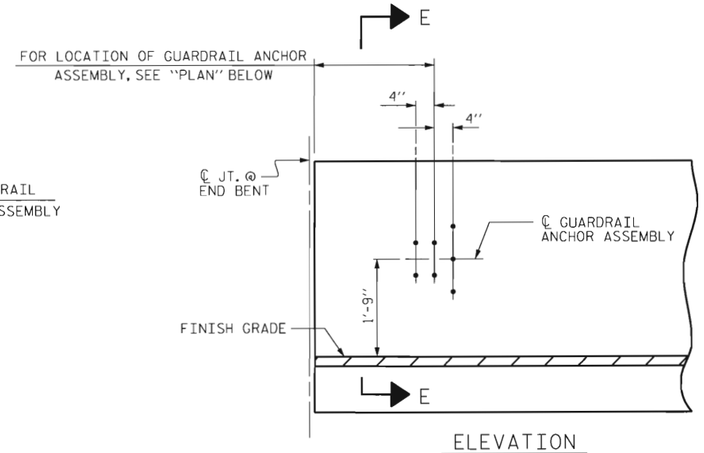

ELEVATION

NOTES

THE GUARDRAIL ANCHOR ASSEMBLY SHALL CONSIST OF A 1/4" HOLD DOWN PLATE AND 7 - 7/8" Ø BOLTS WITH NUTS AND WASHERS.

THE HOLD-DOWN PLATE SHALL CONFORM TO AASHTO M270 GRADE 36. AFTER FABRICATION, THE HOLD-DOWN PLATE SHALL BE HOT-DIP GALVANIZED IN ACCORDANCE WITH AASHTO M111.

BOLTS SHALL CONFORM TO THE REQUIREMENTS OF ASTM A307 AND NUTS SHALL CONFORM TO THE REQUIREMENTS OF AASHTO M291. BOLTS, NUTS AND WASHERS SHALL BE GALVANIZED. (AT THE CONTRACTOR'S OPTION, STAINLESS STEEL BOLTS, NUTS AND WASHERS MAY BE USED AS AN ALTERNATE FOR THE 7/8" Ø GALVANIZED BOLTS, NUTS AND WASHERS. THEY SHALL CONFORM TO OR EXCEED THE MECHANICAL REQUIREMENTS OF ASTM A307. THE USE OF THIS ALTERNATE SHALL BE APPROVED BY THE ENGINEER.)

THE GUARDRAIL ANCHOR ASSEMBLY IS REQUIRED AT ALL POINTS WHERE APPROACH GUARDRAIL IS TO BE ATTACHED TO THE END OF BARRIER RAIL. FOR POINTS OF ATTACHMENT, SEE SKETCH.

AFTER INSTALLATION, THE EXPOSED THREAD OF THE BOLT SHALL BE BURRED WITH A SHARP POINTED TOOL.

THE COST OF THE GUARDRAIL ANCHOR ASSEMBLY SHALL BE INCLUDED IN THE UNIT CONTRACT PRICE BID FOR VERTICAL CONCRETE BARRIER RAIL.

THE VERTICAL REINFORCING BARS MAY BE SHIFTED SLIGHTLY IN THE VERTICAL CONCRETE BARRIER RAIL TO CLEAR ASSEMBLY BOLTS.

THE 1 1/4" Ø HOLES SHALL BE FORMED OR DRILLED WITH A CORE BIT. IMPACT TOOLS WILL NOT BE PERMITTED. ANY CONCRETE DAMAGED BY THIS WORK SHALL BE REPAIRED TO THE SATISFACTION OF THE ENGINEER.

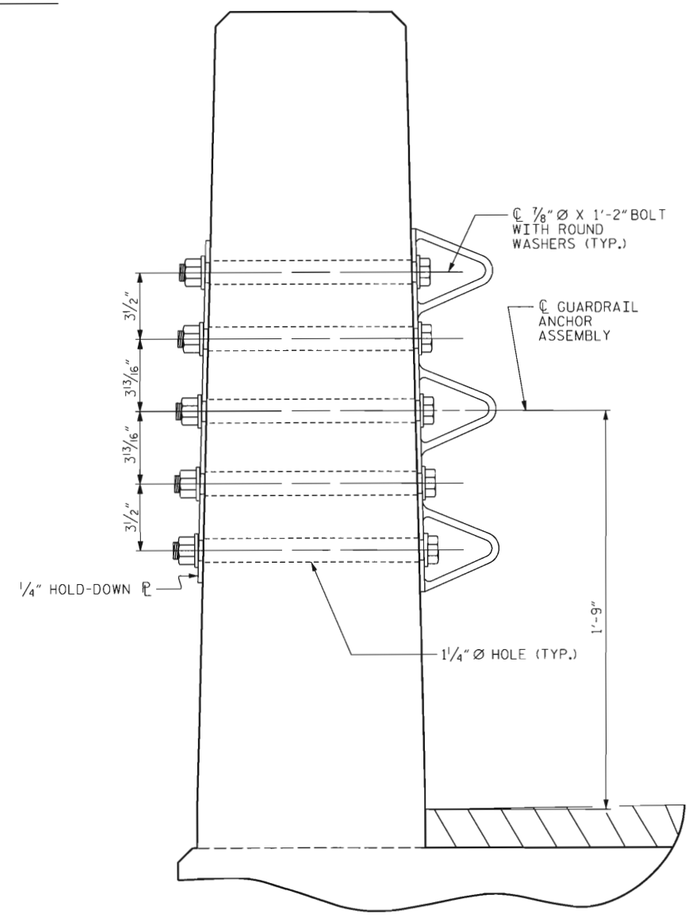

SECTION E-E

GUARDRAIL ANCHOR ASSEMBLY DETAILS

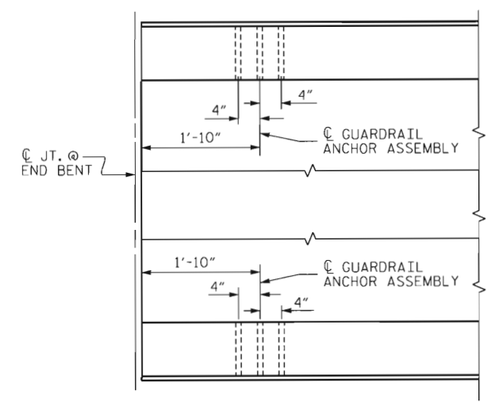

PLAN

LOCATION OF ANCHORS FOR GUARDRAIL

END BENT #1 SHOWN, END BENT #2 SIMILAR.

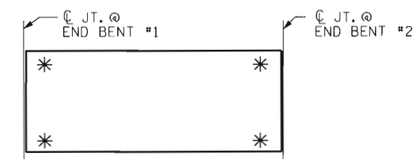

SKETCH SHOWING POINTS OF ATTACHMENT

✳ DENOTES GUARDRAIL ANCHOR ASSEMBLY

PROJECT NO. 17BP.5.R.35

WAKE COUNTY

STATION: 13+70.00 -L-

STATE OF NORTH CAROLINA
DEPARTMENT OF TRANSPORTATION
RALEIGH

STANDARD
GUARDRAIL ANCHORAGE FOR VERTICAL CONCRETE BARRIER RAIL

REVISIONS						SHEET NO.
NO.	BY:	DATE:	NO.	BY:	DATE:	S-9
1			3			TOTAL SHEETS
2			4			19

STD. NO. GRA3 (SHT 1)

NORTH CAROLINA PROFESSIONAL SEAL 22072 ENGINEER JOHN ARTHUR DILWORTH 11-21-13

WETHERILL ENGINEERING
559 Jones Franklin Rd. Suite 164
Raleigh, N.C. 27606
Bus: 919 851 8077
Fax: 919 851 8107
License: F-0377
TRANSPORTATION PLANNING/DESIGN - BRIDGE/STRUCTURE DESIGN
CIVIL/SITE DESIGN - GIS/GPS - CONSTRUCTION OBSERVATION

ASSEMBLED BY : J. PENDERGRAFT		DATE : 6/12	
CHECKED BY : J. DILWORTH		DATE : 6/12	
DRAWN BY : MAA	5/10	ADDED 5/6/10	
CHECKED BY : GM	5/10	REV. 10/1/11	MAA/GM
		REV. 12/5/11	MAA/GM

P:\2012\Wake #201\Structures\DGN\BR #201_STR_GR1.dgn
11/21/2013 1:19:05 AM

NOTES

STIRRUPS IN CAP MAY BE SHIFTED AS NECESSARY TO CLEAR DOWELS.

THE CONCRETE IN THE SHADED AREA OF THE WING SHALL BE POURED AFTER THE VERTICAL CONCRETE BARRIER RAIL IS CAST IF SLIP FORMING IS USED.

FOR PILE SPLICE DETAILS, SEE SHEET 4 OF 4.

FOR WING DETAILS, SEE SHEET 3 OF 4.

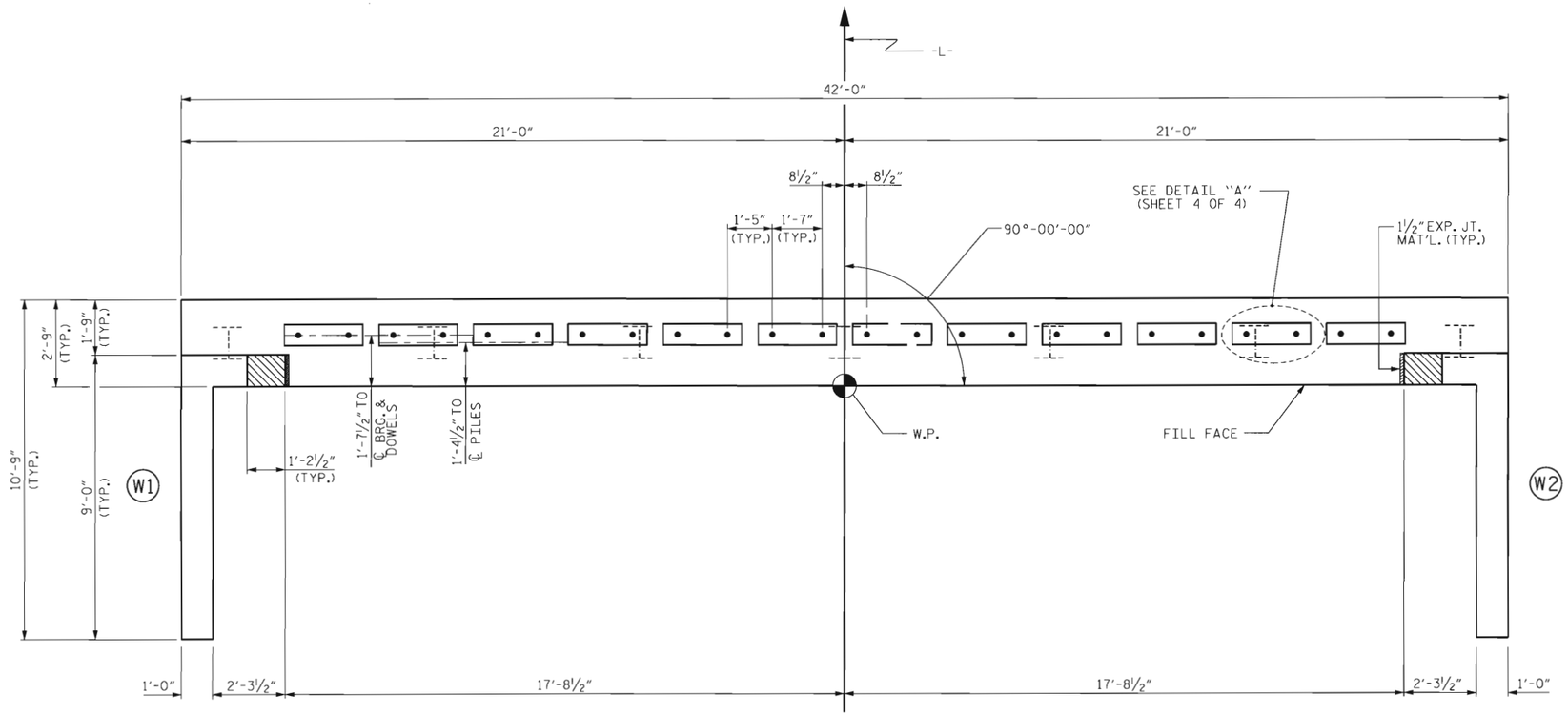

PLAN

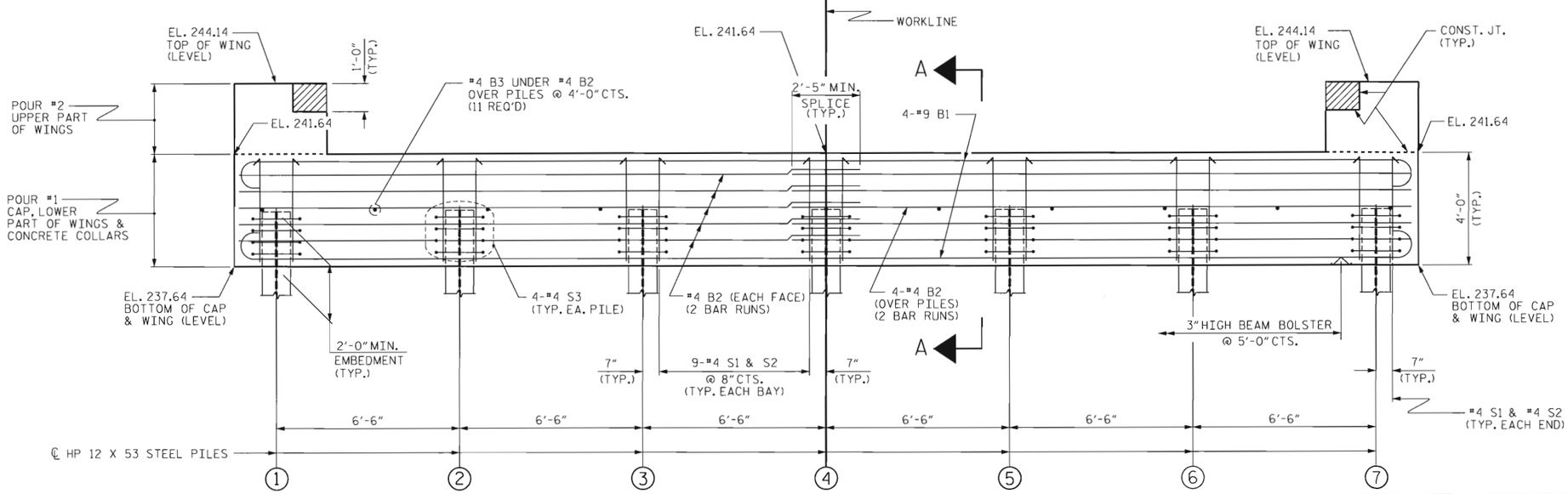

ELEVATION

WINGS NOT SHOWN FOR CLARITY.
FOR SECTION A-A, SEE SHEET 4 OF 4.
CONCRETE COLLARS FOR STEEL PILES NOT SHOWN IN PLAN AND ELEVATION VIEWS FOR CLARITY.
SEE "CORROSION PROTECTION FOR STEEL PILES DETAIL", SHEET 4 OF 4.

PROJECT NO. 17BP.5.R.35
WAKE COUNTY
STATION: 13+70.00 -L-

SHEET 1 OF 4

STATE OF NORTH CAROLINA
DEPARTMENT OF TRANSPORTATION
RALEIGH

SUBSTRUCTURE

END BENT No. 1

NORTH CAROLINA PROFESSIONAL SEAL 22072 ENGINEER JOHN ARTHUR DILWORTH
1-24-13

WETHERILL ENGINEERING
559 Jones Franklin Rd. Suite 164
Raleigh, N.C. 27606
Bus: 919 851 8077
Fax: 919 851 8107
License: F-0377
TRANSPORTATION PLANNING/DESIGN - BRIDGE/STRUCTURE DESIGN
CIVIL/SITE DESIGN - GIS/GPS - CONSTRUCTION OBSERVATION

REVISIONS						
NO.	BY:	DATE:	NO.	BY:	DATE:	
1			3			
2			4			

SHEET NO. S-10
TOTAL SHEETS 19

ASSEMBLED BY : J. PENDERGRAFT DATE : 9-12
CHECKED BY : J. DILWORTH DATE : 9-12
DRAWN BY : WJH 12/11
CHECKED BY : AAC 12/11

P:\2012\Wake #201\Structures\DGN\BR #201_EB1.dgn
11/21/2013 7:22:06 AM

STD. NO. EB_36_90S4

NOTES

STIRRUPS IN CAP MAY BE SHIFTED AS NECESSARY TO CLEAR DOWELS.

THE CONCRETE IN THE SHADED AREA OF THE WING SHALL BE POURED AFTER THE VERTICAL CONCRETE BARRIER RAIL IS CAST IF SLIP FORMING IS USED.

FOR PILE SPLICE DETAILS, SEE SHEET 4 OF 4.

FOR WING DETAILS, SEE SHEET 3 OF 4.

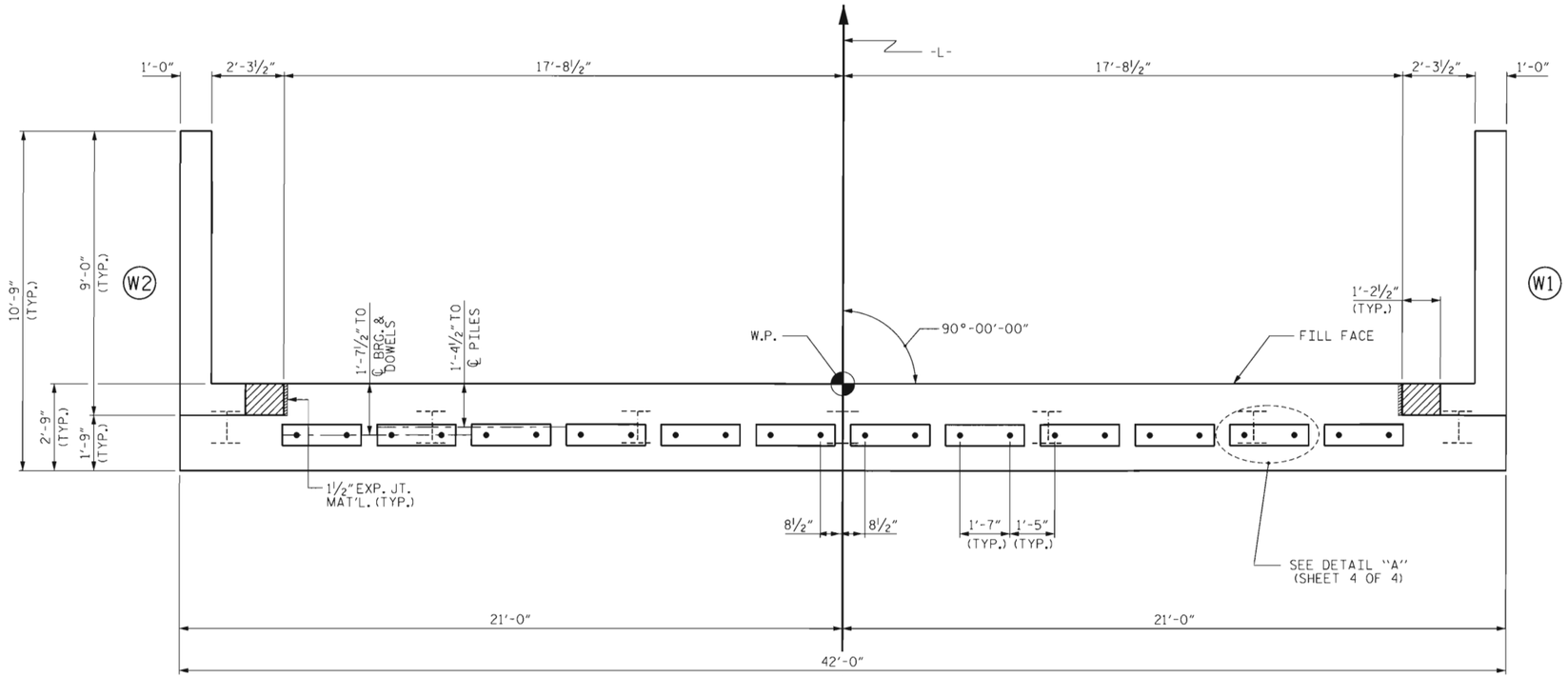

PLAN

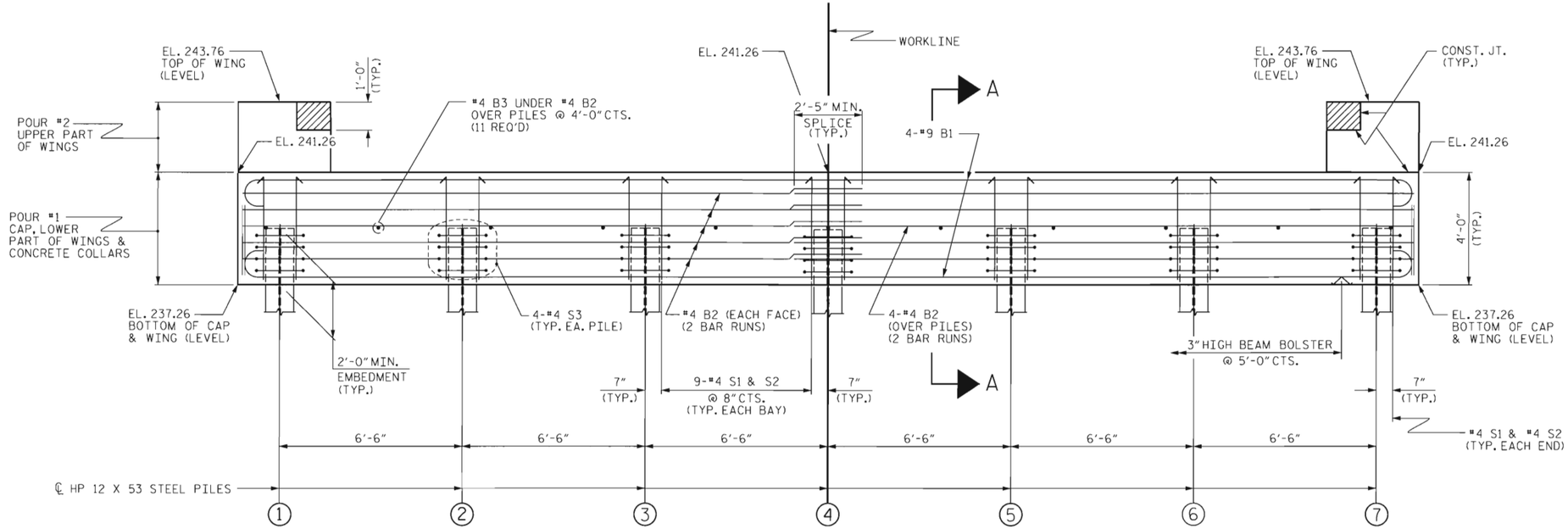

ELEVATION

WINGS NOT SHOWN FOR CLARITY.
FOR SECTION A-A, SEE SHEET 4 OF 4.
CONCRETE COLLARS FOR STEEL PILES NOT SHOWN IN PLAN AND ELEVATION VIEWS FOR CLARITY.
SEE "CORROSION PROTECTION FOR STEEL PILES DETAIL", SHEET 4 OF 4.

PROJECT NO. 17BP.5.R.35
WAKE COUNTY
STATION: 13+70.00 -L-

SHEET 2 OF 4

STATE OF NORTH CAROLINA
DEPARTMENT OF TRANSPORTATION
RALEIGH

SUBSTRUCTURE

END BENT No. 2

NORTH CAROLINA PROFESSIONAL SEAL 22072 ENGINEER JOHN ARTHUR DILWORTH
1-24-13

WETHERILL ENGINEERING
559 Jones Franklin Rd. Suite 164
Raleigh, N.C. 27606
Bus: 919 851 8077
Fax: 919 851 8107
License: F-0377

TRANSPORTATION PLANNING/DESIGN - BRIDGE/STRUCTURE DESIGN
CIVIL/SITE DESIGN - GIS/GPS - CONSTRUCTION OBSERVATION

REVISIONS						SHEET NO.
NO.	BY:	DATE:	NO.	BY:	DATE:	S-11
1			3			TOTAL SHEETS
2			4			19

ASSEMBLED BY : J. PENDERGRAFT	DATE : 9-12
CHECKED BY : J. DILWORTH	DATE : 9-12
DRAWN BY : WJH	12/11
CHECKED BY : AAC	12/11

STD. NO. EB_36_90S4

P:\2012\Wake #201\Structures\DGN\BR #201_EB1.dgn
11/21/2013 7:22:15 AM

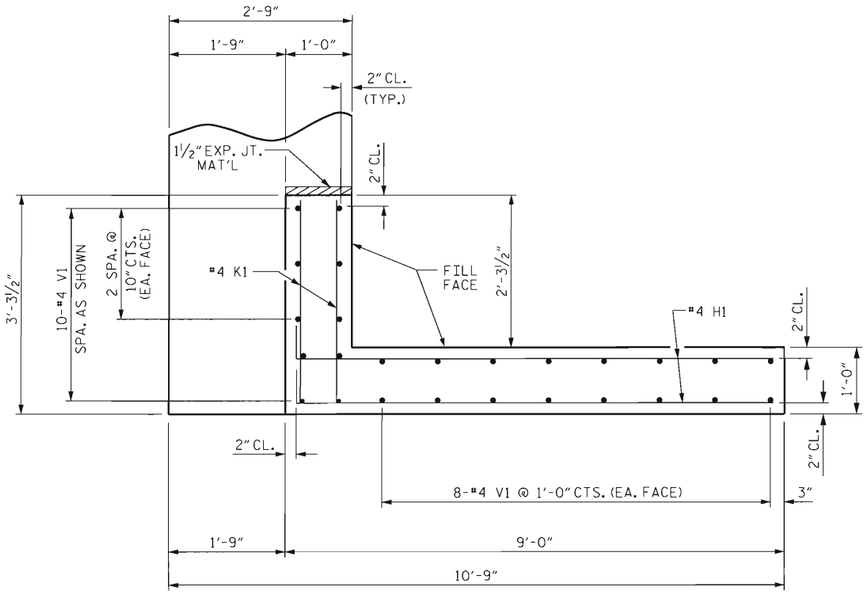

PLAN OF WING (W1)

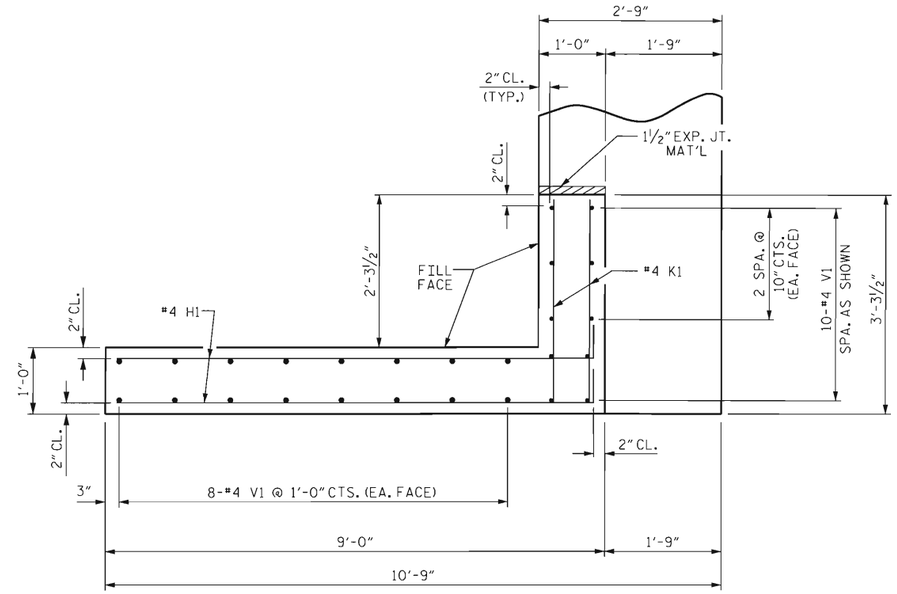

PLAN OF WING (W2)

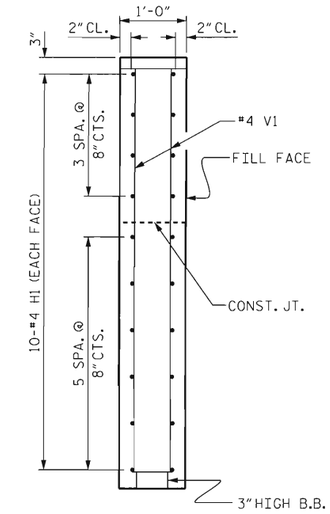

SECTION X-X

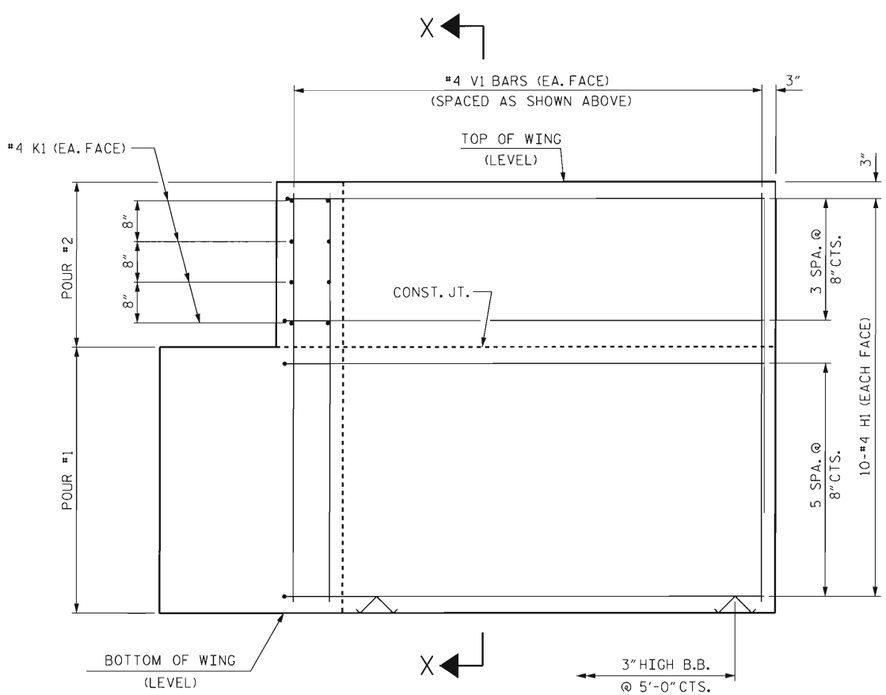

ELEVATION OF WING (W1)

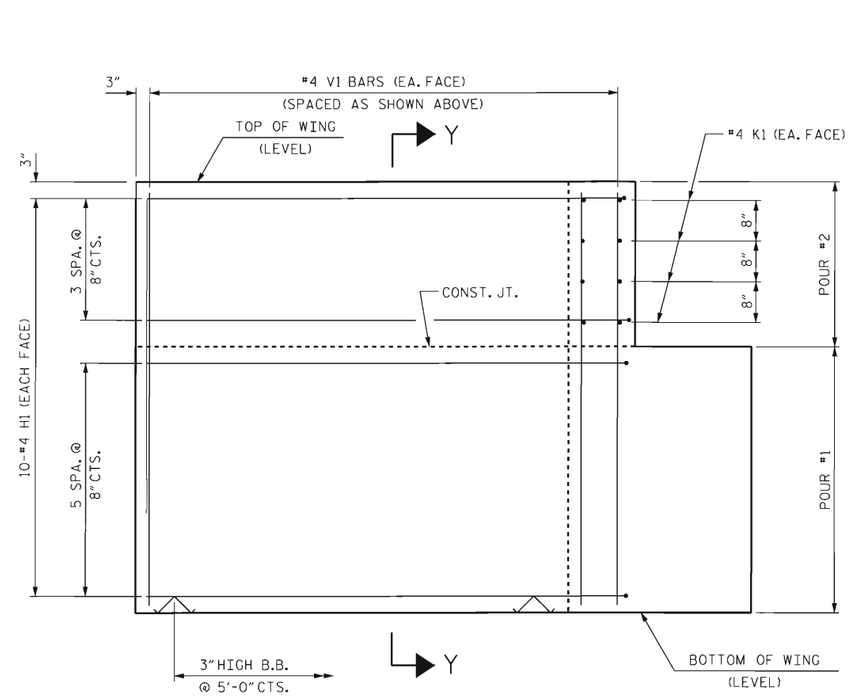

ELEVATION OF WING (W2)

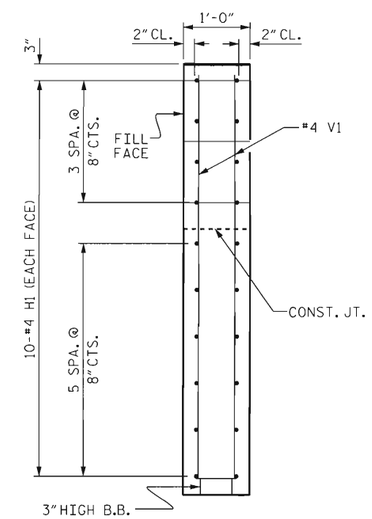

SECTION Y-Y

WING DETAILS

PROJECT NO. 17BP.5.R.35

WAKE COUNTY

STATION: 13+70.00 -L-

SHEET 3 OF 4

STATE OF NORTH CAROLINA
DEPARTMENT OF TRANSPORTATION
RALEIGH

SUBSTRUCTURE

END BENT
WING DETAILS

ASSEMBLED BY : J. PENDERGRAFT DATE : 9-12
CHECKED BY : J. DILWORTH DATE : 9-12

DRAWN BY : WJH 12/11
CHECKED BY : AAC 12/11

NORTH CAROLINA PROFESSIONAL SEAL 22072 ENGINEER JOHN ARTHUR DILWORTH
11-21-13

WETHERILL ENGINEERING
559 Jones Franklin Rd. Suite 164
Raleigh, N.C. 27606
Bus: 919 851 8077
Fax: 919 851 8107
License: F-0377
TRANSPORTATION PLANNING/DESIGN - BRIDGE/STRUCTURE DESIGN
CIVIL/SITE DESIGN - GIS/GPS - CONSTRUCTION OBSERVATION

REVISIONS						SHEET NO.
NO.	BY:	DATE:	NO.	BY:	DATE:	S-12
1			3			TOTAL SHEETS
2			4			19

STD. NO. EB_36_90S4

P:\2012\Wake #201\Structures\DGN\BR #201_EB1.dgn
11/21/2013 7:22:37 AM

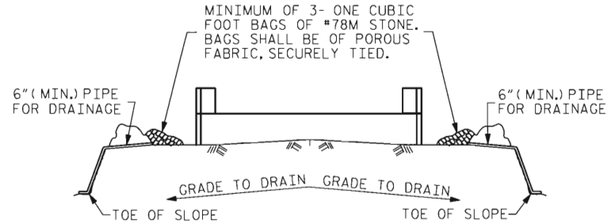

BAGGED STONE AND PIPE SHALL BE PLACED IMMEDIATELY AFTER COMPLETION OF END BENT EXCAVATION. PIPE MAY BE EITHER CONCRETE, CORRUGATED STEEL, CORRUGATED ALUMINUM ALLOY, OR CORRUGATED PLASTIC. PERFORATED PIPE WILL NOT BE ALLOWED.

BAGGED STONE SHALL REMAIN IN PLACE UNTIL THE ENGINEER DIRECTS THAT IT BE REMOVED. THE CONTRACTOR SHALL REMOVE AND DISPOSE OF SILT ACCUMULATIONS AT BAGGED STONE WHEN SO DIRECTED BY THE ENGINEER. BAGS SHALL BE REMOVED AND REPLACED WHENEVER THE ENGINEER DETERMINES THAT THEY HAVE DETERIORATED AND LOST THEIR EFFECTIVENESS.

NO SEPARATE PAYMENT WILL BE MADE FOR THIS WORK AND THE ENTIRE COST OF THIS WORK SHALL BE INCLUDED IN THE UNIT CONTRACT PRICE BID FOR THE SEVERAL PAY ITEMS.

TEMPORARY DRAINAGE AT END BENT

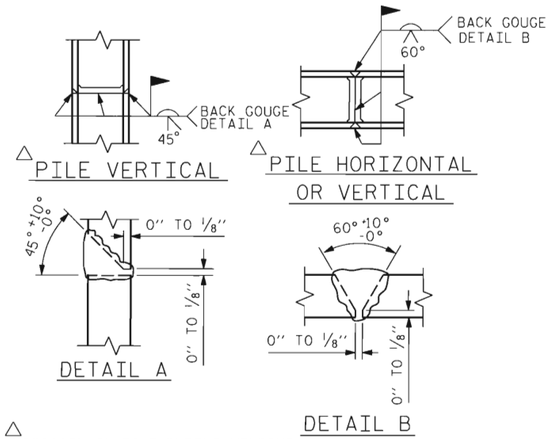

△ POSITION OF PILE DURING WELDING.

PILE SPLICE DETAILS

BAR TYPES

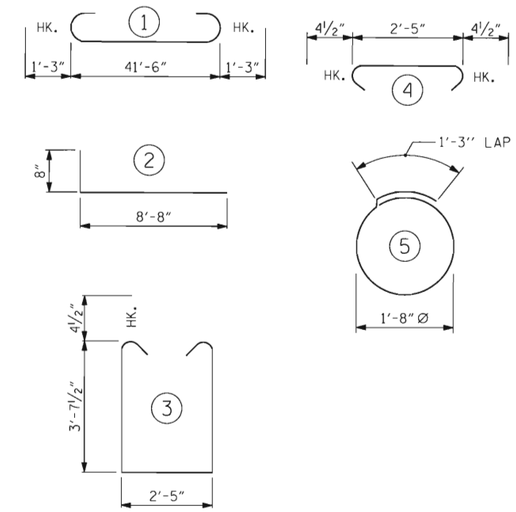

ALL BAR DIMENSIONS ARE OUT TO OUT.

END BENT No. 1	END BENT No. 2
HP 12 X 53 STEEL PILES NO: 7 LIN. FT. = 85	HP 12 X 53 STEEL PILES NO: 7 LIN. FT. = 110
PILE EXCAVATION IN SOIL LIN. FT. = 47.0	PILE EXCAVATION IN SOIL LIN. FT. = 0.0
PILE EXCAVATION NOT IN SOIL LIN. FT. = 23.0	PILE EXCAVATION NOT IN SOIL LIN. FT. = 0.0
STEEL PILE POINTS NO: 7	STEEL PILE POINTS NO: 7

BILL OF MATERIAL
FOR ONE END BENT

BAR	NO.	SIZE	TYPE	LENGTH	WEIGHT
B1	8	#9	1	44'-0"	1197
B2	28	#4	STR	22'-1"	413
B3	11	#4	STR	2'-5"	18
D1	24	#6	STR	1'-6"	54
H1	40	#4	2	9'-4"	249
K1	16	#4	STR	2'-11"	31
S1	56	#4	3	10'-5"	390
S2	56	#4	4	3'-2"	118
S3	28	#4	5	6'-6"	122
V1	52	#4	STR	6'-2"	214

REINFORCING STEEL (FOR ONE END BENT) 2806 LBS.

CLASS A CONCRETE BREAKDOWN (FOR ONE END BENT)

POUR #1	CAP, LOWER PART OF WINGS & COLLARS	20.7 C.Y.
POUR #2	UPPER PART OF WINGS	2.1 C.Y.
TOTAL CLASS A CONCRETE		22.8 C.Y.

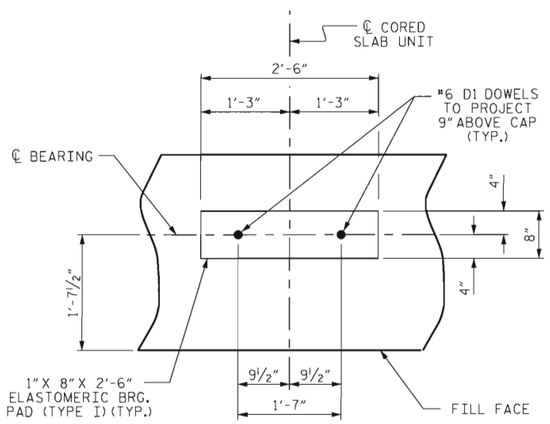

DETAIL "A"

(END BENT No. 1 SHOWN, END BENT No. 2 SIMILAR BY ROTATION)

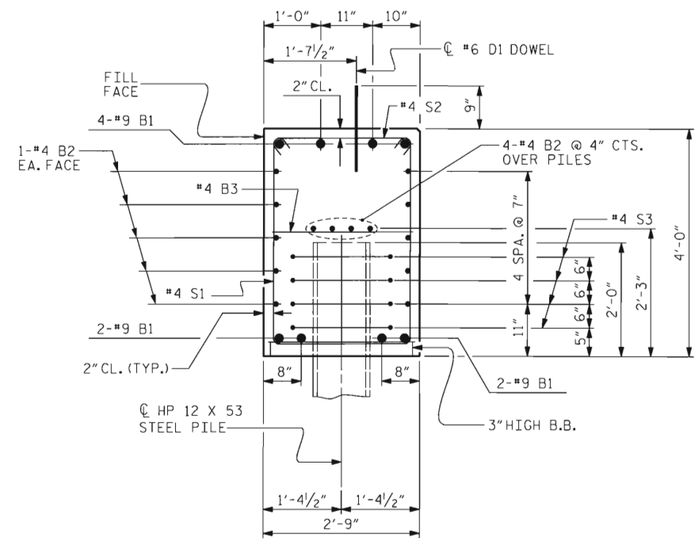

SECTION A-A

(CONCRETE COLLAR NOT SHOWN FOR CLARITY. SEE "CORROSION PROTECTION FOR STEEL PILES DETAIL.")

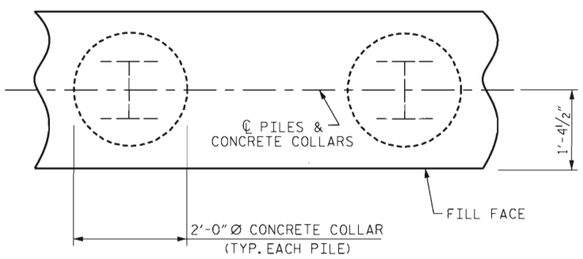

PLAN

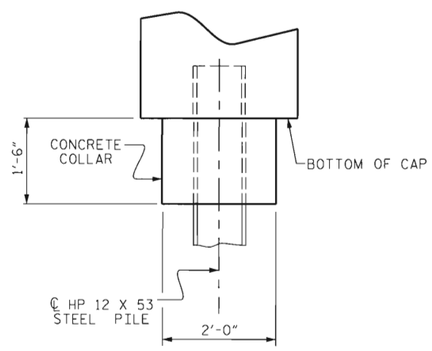

ELEVATION

CORROSION PROTECTION FOR STEEL PILES DETAIL

(END BENT No. 1 SHOWN, END BENT No. 2 SIMILAR BY ROTATION)

PROJECT NO. 17BP.5.R.35
WAKE COUNTY
STATION: 13+70.00 -L-

SHEET 4 OF 4

STATE OF NORTH CAROLINA
DEPARTMENT OF TRANSPORTATION
RALEIGH

SUBSTRUCTURE

END BENT No. 1 & 2 DETAILS

ASSEMBLED BY : J. PENDERGRAFT	DATE : 9-12
CHECKED BY : J. DILWORTH	DATE : 9-12
DRAWN BY : WJH	12/11
CHECKED BY : AAC	12/11

NORTH CAROLINA PROFESSIONAL SEAL 22072 ENGINEER JOHN ARTHUR DILWORTH 11-2-13

WETHERILL ENGINEERING
559 Jones Franklin Rd. Suite 164
Raleigh, N.C. 27606
Bus: 919 851 8077
Fax: 919 851 8107
License: F-0377
TRANSPORTATION PLANNING/DESIGN - BRIDGE/STRUCTURE DESIGN
CIVIL/SITE DESIGN - GIS/GPS - CONSTRUCTION OBSERVATION

REVISIONS								SHEET NO.
NO.	BY:	DATE:	NO.	BY:	DATE:			S-13
1			3					TOTAL SHEETS
2			4					19

STD. NO. EB_36_90S4

P:\2012\Wake #201\Structures\DGN\BR #201_EB1.dgn
11/21/2013 7:22:47 AM

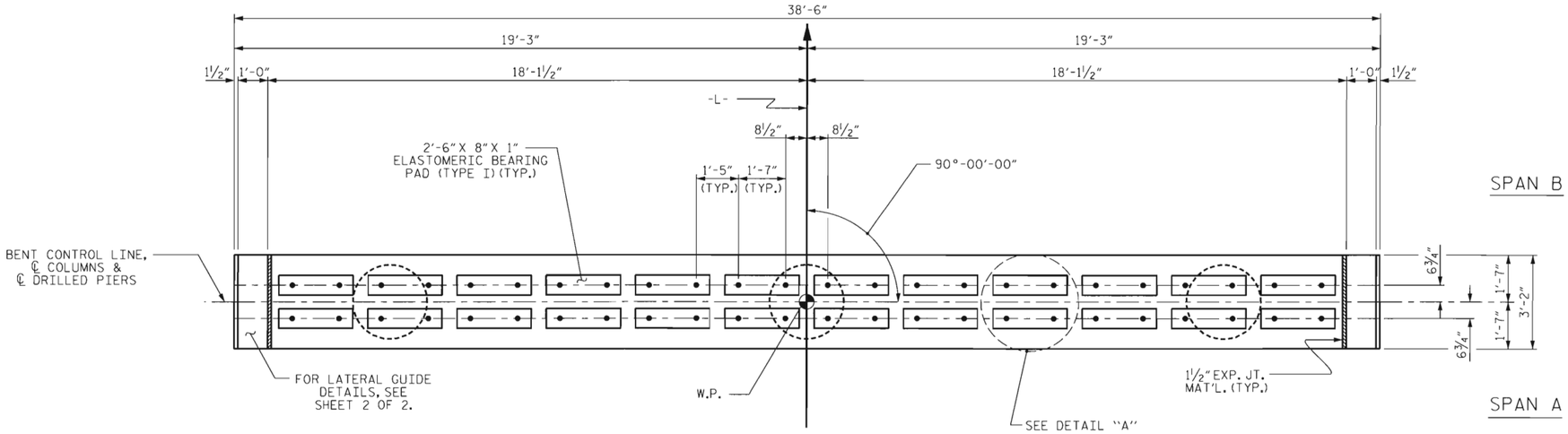

PLAN

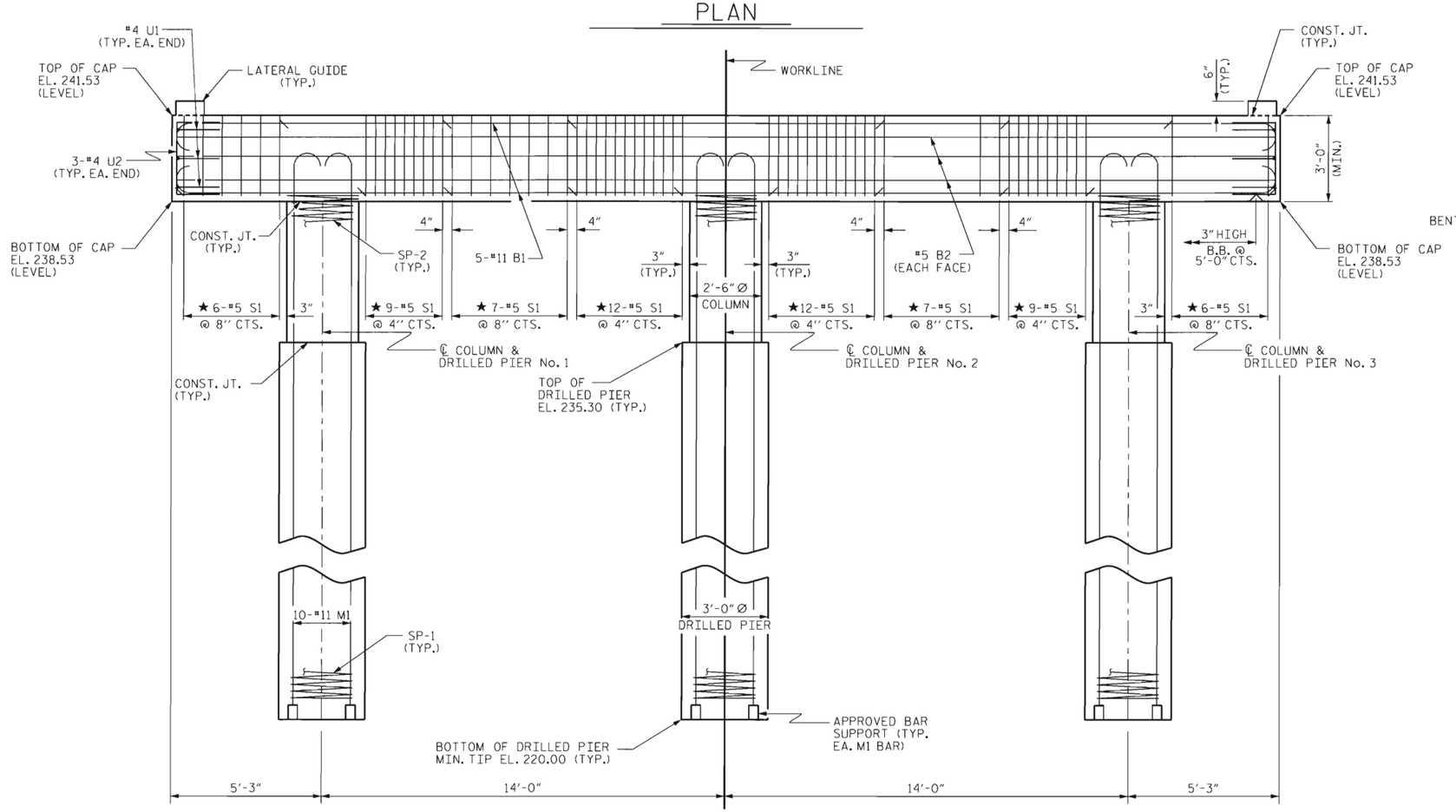

ELEVATION

DIMENSIONS & REINFORCING STEEL ARE TYPICAL FOR EACH COLUMN & DRILLED PIER UNLESS OTHERWISE NOTED.

NOTES

STIRRUPS IN CAP MAY BE SHIFTED AS NECESSARY TO CLEAR DOWELS.

HOOKS ON "V" BARS MAY BE TURNED AS NECESSARY FOR PLACING REINFORCING STEEL.

FOR DRILLED PIERS, SEE SECTION 411 OF THE STANDARD SPECIFICATIONS.

ALL STEEL IN THE DRILLED PIERS IS INCLUDED IN THE PAY ITEMS FOR "REINFORCING STEEL" AND "SPIRAL COLUMN REINFORCING STEEL."

THE LATERAL GUIDES ARE NOT TO BE POURED UNTIL AFTER THE CORED SLAB UNITS ARE IN PLACE.

★ INVERT ALTERNATE STIRRUPS.

DRILLED PIERS SHALL BE TERMINATED ONE FOOT ± ABOVE NORMAL WATER SURFACE ELEVATION FOR SHAFTS LOCATED IN WATER.

THE CONTRACTOR'S ATTENTION IS CALLED TO THE FACT THAT THE LONGITUDINAL REINFORCEMENT FOR DRILLED PIERS IS DETAILED WITH 3 FEET OF EXTRA LENGTH.

THE CONTRACTOR HAS THE OPTION TO OMIT THE LATERAL GUIDE IF APPROVED BY THE ENGINEER.

SPLICING OF THE LONGITUDINAL BARS IN THE DRILLED PIERS WILL NOT BE PERMITTED.

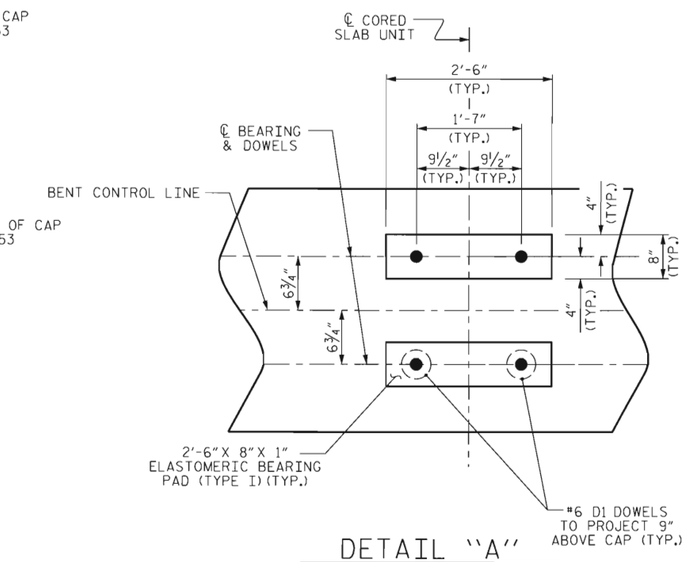

DETAIL "A"

(DIMENSIONS ARE TYPICAL EACH BEARING)

PROJECT NO. 17BP.5.R.35

WAKE COUNTY

STATION: 13+70.00 -L-

SHEET 1 OF 2

STATE OF NORTH CAROLINA
DEPARTMENT OF TRANSPORTATION
RALEIGH

SUBSTRUCTURE

BENT No. 1

ASSEMBLED BY : J. PENDERGRAFT	DATE : 9/12
CHECKED BY : J. DILWORTH	DATE : 9/12
DRAWN BY : DGE	03/10
CHECKED BY : MKT	03/10

NORTH CAROLINA PROFESSIONAL SEAL 22072 ENGINEER JOHN ARTHUR DILWORTH 7-2-13

WETHERILL ENGINEERING
559 Jones Franklin Rd. Suite 164
Raleigh, N.C. 27606
Bus: 919 851 8077
Fax: 919 851 8107
License: F-0377
TRANSPORTATION PLANNING/DESIGN - BRIDGE/STRUCTURE DESIGN
CIVIL/SITE DESIGN - GIS/GPS - CONSTRUCTION OBSERVATION

REVISIONS							SHEET NO.
NO.	BY:	DATE:	NO.	BY:	DATE:		S-14
1			3				TOTAL SHEETS
2			4				19

STD. NO. DP_BT_36_90S_<50'

P:\2012\Wake #201\Structures\DGN\BR #201_BT1.dgn
11/21/2013 8:52:18 AM

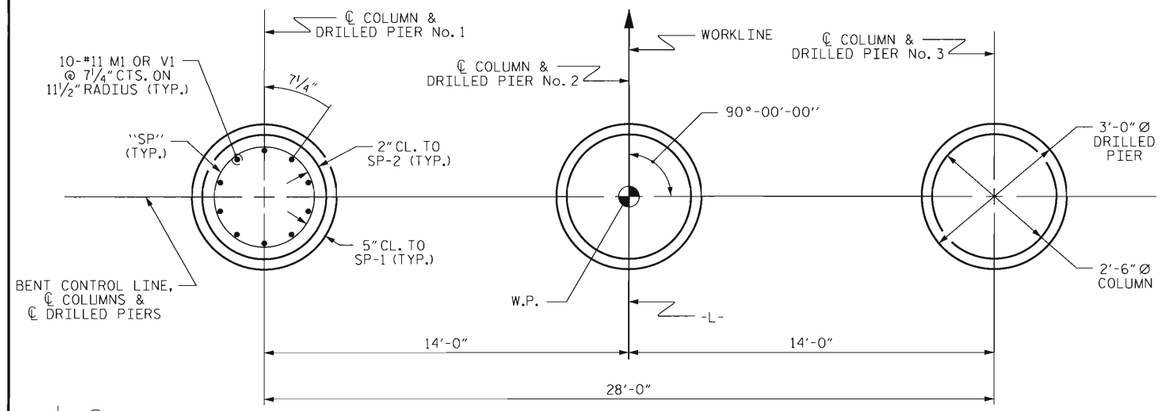

PLAN OF DRILLED PIERS & COLUMNS

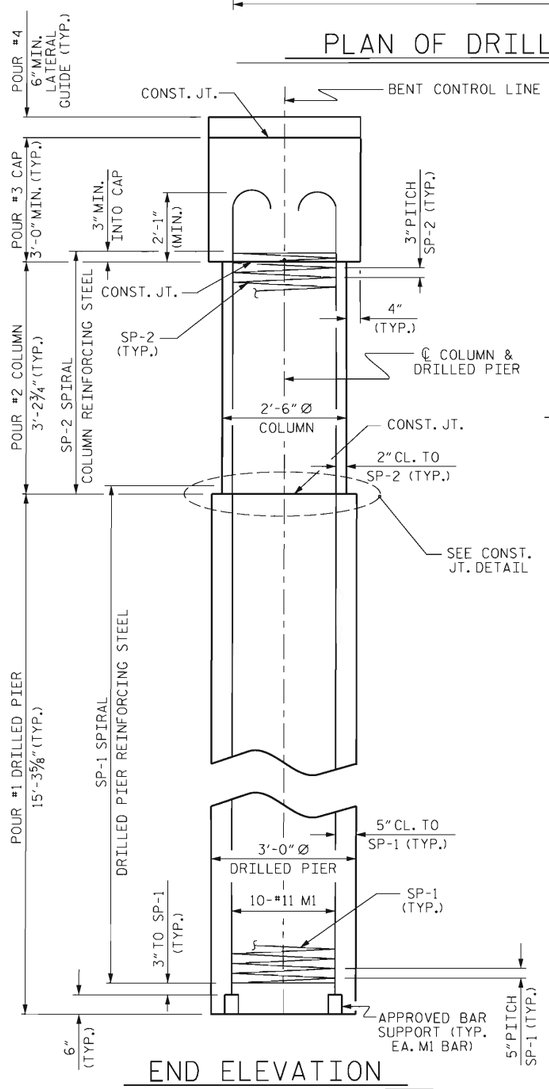

END ELEVATION

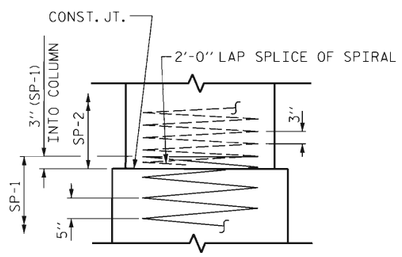

CONSTRUCTION JOINT DETAIL

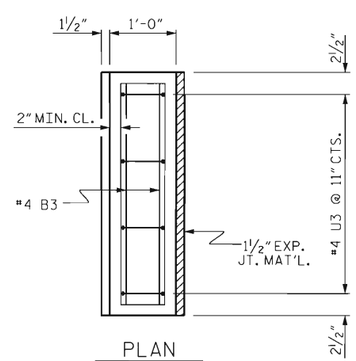

PLAN

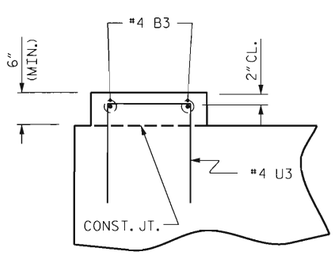

ELEVATION

LATERAL GUIDE DETAILS

(LEFT LATERAL GUIDE SHOWN, RIGHT SIDE SIMILAR)

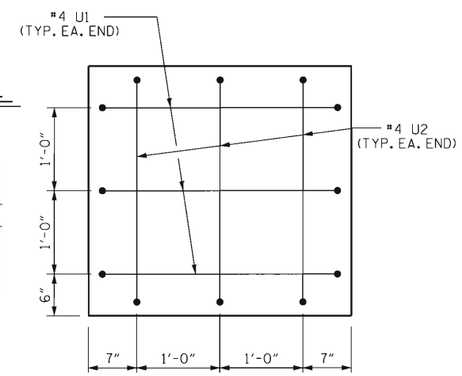

END OF CAP VIEW

(TYPICAL BOTH ENDS)

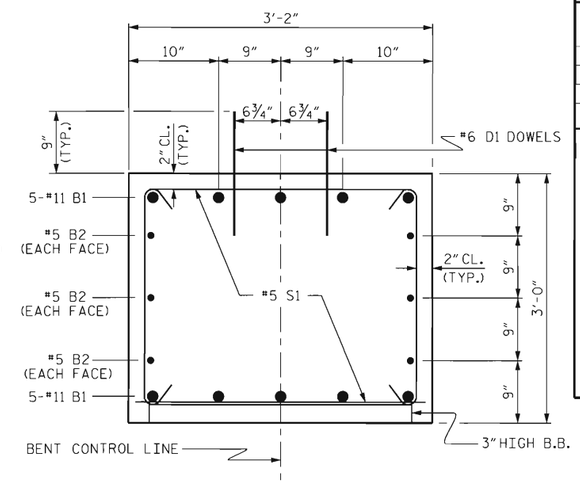

SECTION THRU CAP

BAR TYPES

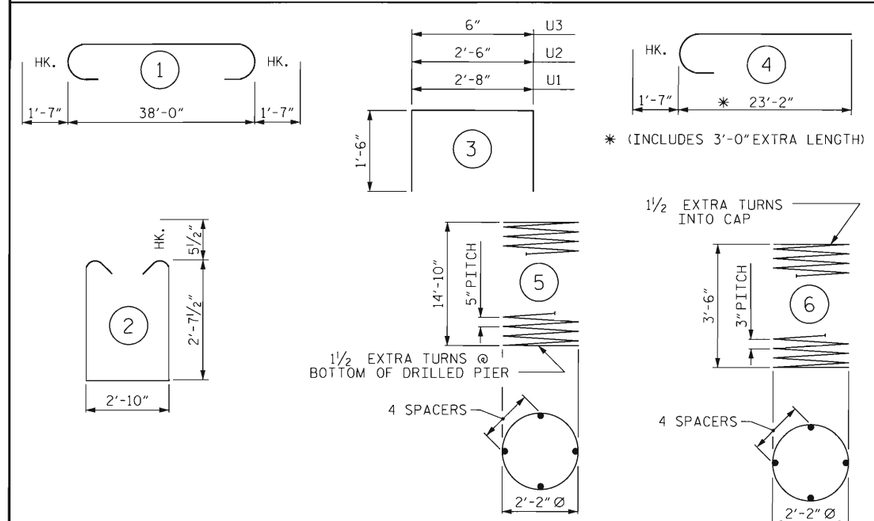

ALL BAR DIMENSIONS ARE OUT TO OUT

BILL OF MATERIAL
FOR ONE BENT

BAR	NO.	SIZE	TYPE	LENGTH	WEIGHT
B1	10	#11	1	41'-2"	2187
B2	6	#5	STR	38'-2"	239
B3	4	#4	STR	2'-10"	8
D1	48	#6	STR	1'-6"	108
M1	30	#11	4	24'-9"	3945
S1	68	#5	2	9'-0"	638
U1	6	#4	3	5'-8"	23
U2	6	#4	3	5'-6"	22
U3	8	#4	3	3'-6"	19
REINFORCING STEEL (FOR ONE BENT)					7189 LBS.
SP-1	3	*	5	247'-0"	773
SP-2	3	**	6	113'-7"	228
SPIRAL COLUMN REINFORCING STEEL (FOR ONE BENT)					1001 LBS.

* THE SP-1 SPIRAL REINFORCING STEEL SHALL BE W31 OR D-31 COLD DRAWN WIRE OR #5 PLAIN OR DEFORMED BAR

** THE SP-2 SPIRAL REINFORCING STEEL SHALL BE W20 OR D-20 COLD DRAWN WIRE OR #4 PLAIN OR DEFORMED BAR

CLASS A CONCRETE BREAKDOWN (FOR ONE BENT)

POUR #2 (COLUMNS)	1.8 C.Y.
POUR #3 (CAP)	13.6 C.Y.
POUR #4 (LATERAL GUIDE)	0.1 C.Y.
TOTAL CLASS A CONCRETE	15.5 C.Y.

DRILLED PIERS: (FOR ONE BENT)

DRILLED PIER CONCRETE POUR #1 (DRILLED PIERS)	12.0 C.Y.
3'-0" Ø DRILLED PIER NOT IN SOIL	30.00 LIN. FT.
3'-0" Ø DRILLED PIER IN SOIL	15.90 LIN. FT.
PERMANENT STEEL CASING FOR 3'-0" Ø DRILLED PIER	20.9 LIN. FT.
CSL TUBES	201.6 LIN. FT.

PROJECT NO. 17BP.5.R.35

WAKE COUNTY

STATION: 13+70.00 -L-

SHEET 2 OF 2

STATE OF NORTH CAROLINA
DEPARTMENT OF TRANSPORTATION
RALEIGH

SUBSTRUCTURE

BENT No. 1

ASSEMBLED BY : J. PENDERGRAFT DATE : 9/12
CHECKED BY : J. DILWORTH DATE : 9/12

DRAWN BY : DGE 03/10
CHECKED BY : MKT 03/10

NORTH CAROLINA PROFESSIONAL SEAL 22072 ENGINEER JOHN ARTHUR DILWORTH
1-21-13

WETHERILL ENGINEERING
559 Jones Franklin Rd. Suite 164
Raleigh, N.C. 27606
Bus: 919 851 8077
Fax: 919 851 8107
License: F-0377
TRANSPORTATION PLANNING/DESIGN - BRIDGE/STRUCTURE DESIGN
CIVIL/SITE DESIGN - GIS/GPS - CONSTRUCTION OBSERVATION

REVISIONS						SHEET NO.
NO.	BY:	DATE:	NO.	BY:	DATE:	S-15
1			3			TOTAL SHEETS
2			4			19

STD. NO. DP_BT_36_90S_<50'

P:\2012\Wake #201\Structures\DGN\BR #201_BT 1.dgn
11/21/2013 7:24:25 AM

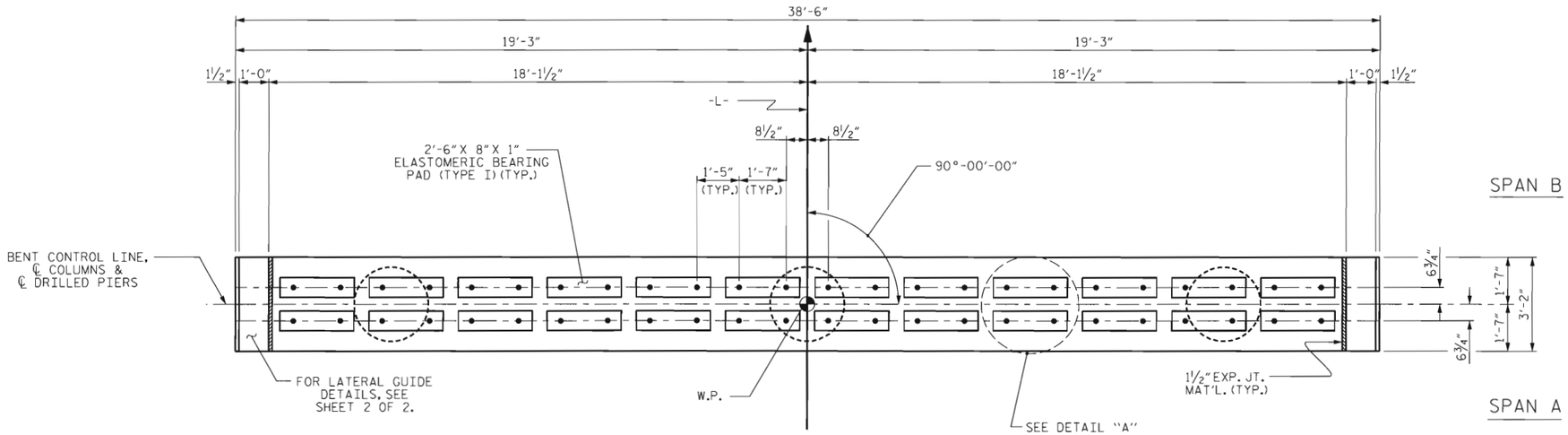

PLAN

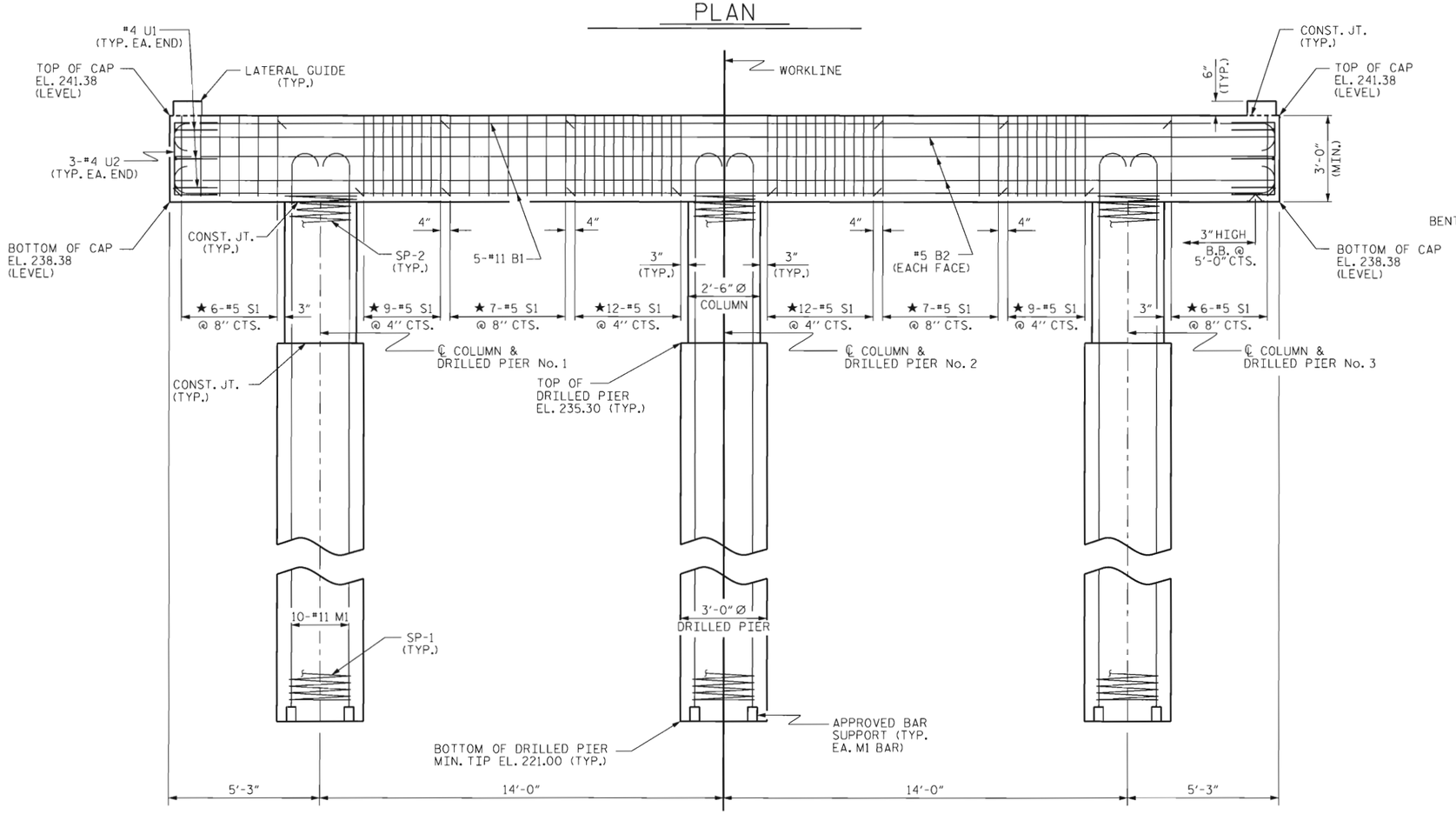

ELEVATION

DIMENSIONS & REINFORCING STEEL ARE TYPICAL FOR EACH COLUMN & DRILLED PIER UNLESS OTHERWISE NOTED.

NOTES

STIRRUPS IN CAP MAY BE SHIFTED AS NECESSARY TO CLEAR DOWELS.

HOOKS ON "V" BARS MAY BE TURNED AS NECESSARY FOR PLACING REINFORCING STEEL.

FOR DRILLED PIERS, SEE SECTION 411 OF THE STANDARD SPECIFICATIONS.

ALL STEEL IN THE DRILLED PIERS IS INCLUDED IN THE PAY ITEMS FOR "REINFORCING STEEL" AND "SPIRAL COLUMN REINFORCING STEEL."

THE LATERAL GUIDES ARE NOT TO BE POURED UNTIL AFTER THE CORED SLAB UNITS ARE IN PLACE.

★ INVERT ALTERNATE STIRRUPS.

DRILLED PIERS SHALL BE TERMINATED ONE FOOT ± ABOVE NORMAL WATER SURFACE ELEVATION FOR SHAFTS LOCATED IN WATER.

THE CONTRACTOR'S ATTENTION IS CALLED TO THE FACT THAT THE LONGITUDINAL REINFORCEMENT FOR DRILLED PIERS IS DETAILED WITH 3 FEET OF EXTRA LENGTH.

THE CONTRACTOR HAS THE OPTION TO OMIT THE LATERAL GUIDE IF APPROVED BY THE ENGINEER.

SPLICING OF THE LONGITUDINAL BARS IN THE DRILLED PIERS WILL NOT BE PERMITTED.

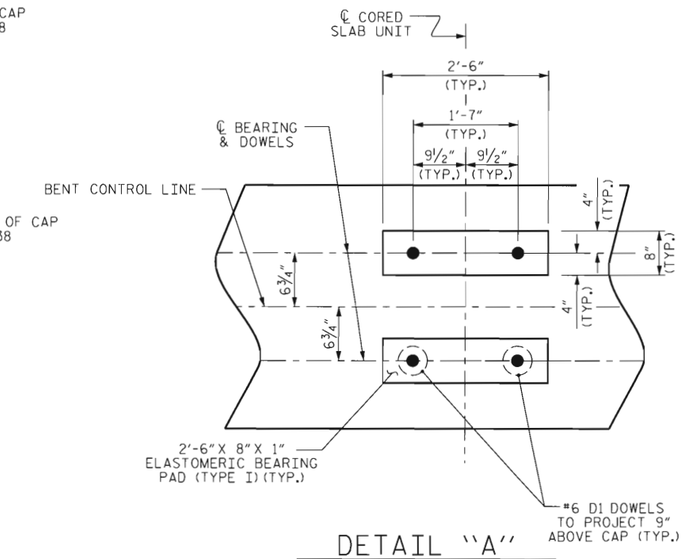

DETAIL "A"

(DIMENSIONS ARE TYPICAL EACH BEARING)

PROJECT NO. 17BP.5.R.35

WAKE COUNTY

STATION: 13+70.00 -L-

SHEET 1 OF 2

STATE OF NORTH CAROLINA
DEPARTMENT OF TRANSPORTATION
RALEIGH

SUBSTRUCTURE

BENT No. 2

ASSEMBLED BY : J. PENDERGRAFT	DATE : 9/12
CHECKED BY : J. DILWORTH	DATE : 9/12
DRAWN BY : DGE	03/10
CHECKED BY : MKT	03/10

NORTH CAROLINA PROFESSIONAL SEAL 22072 ENGINEER JOHN ARTHUR DILWORTH 1-21-13

ETHERILL ENGINEERING
559 Jones Franklin Rd. Suite 164
Raleigh, N.C. 27606
Bus: 919 851 8077
Fax: 919 851 8107
License: F-0377
TRANSPORTATION PLANNING/DESIGN - BRIDGE/STRUCTURE DESIGN
CIVIL/SITE DESIGN - GIS/GPS - CONSTRUCTION OBSERVATION

REVISIONS							SHEET NO.
NO.	BY:	DATE:	NO.	BY:	DATE:		S-16
1			3				TOTAL SHEETS
2			4				19

STD. NO. DP_BT_36_90S_<50'

P:\2012\Wake #201\Structures\DGN\BR #201_BT 1.dgn
11/21/2013 8:52:44 AM

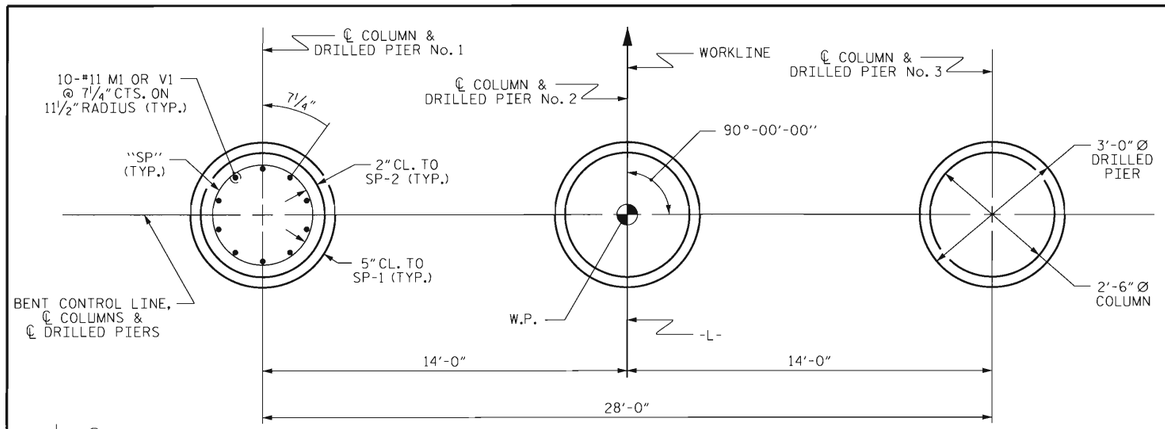

PLAN OF DRILLED PIERS & COLUMNS

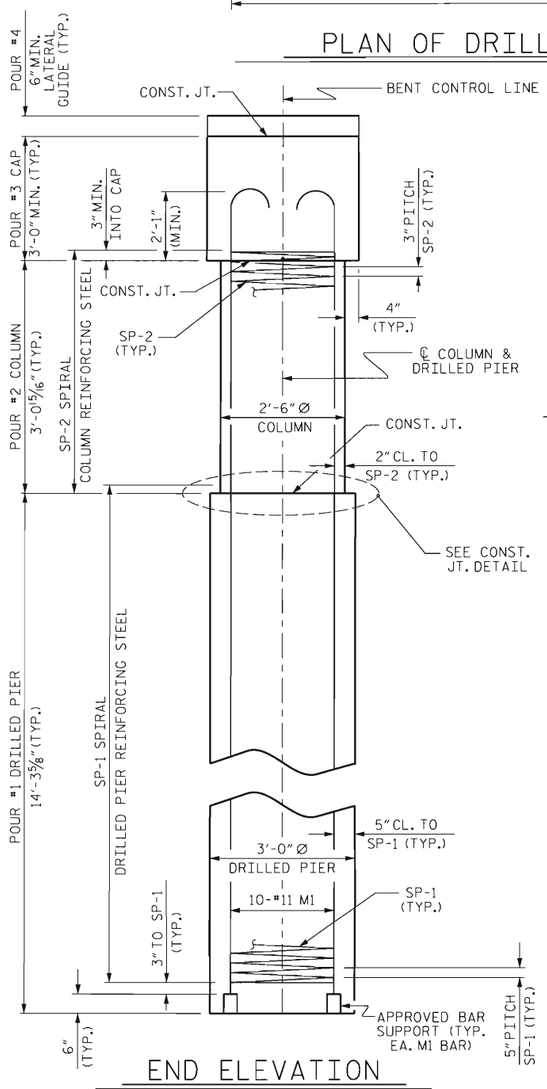

END ELEVATION

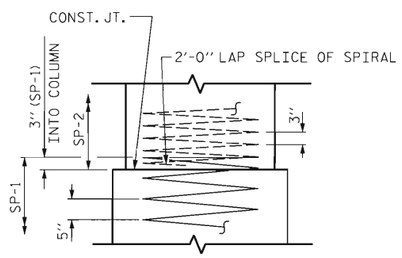

CONSTRUCTION JOINT DETAIL

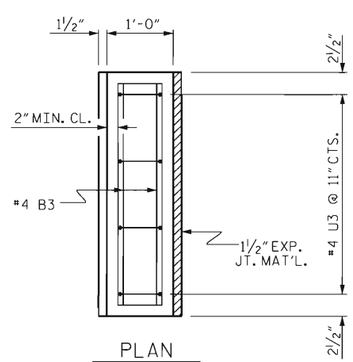

PLAN

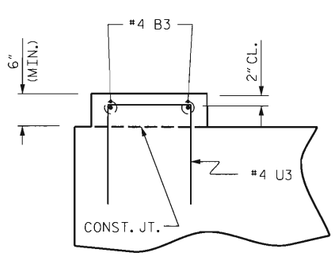

ELEVATION

LATERAL GUIDE DETAILS

(LEFT LATERAL GUIDE SHOWN, RIGHT SIDE SIMILAR)

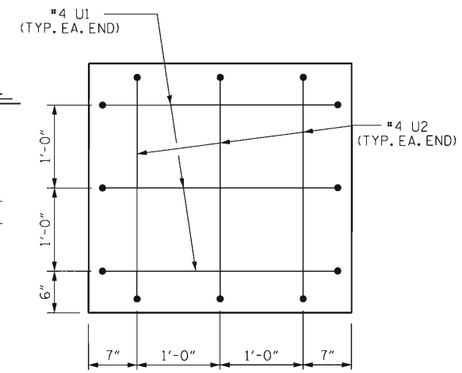

END OF CAP VIEW

(TYPICAL BOTH ENDS)

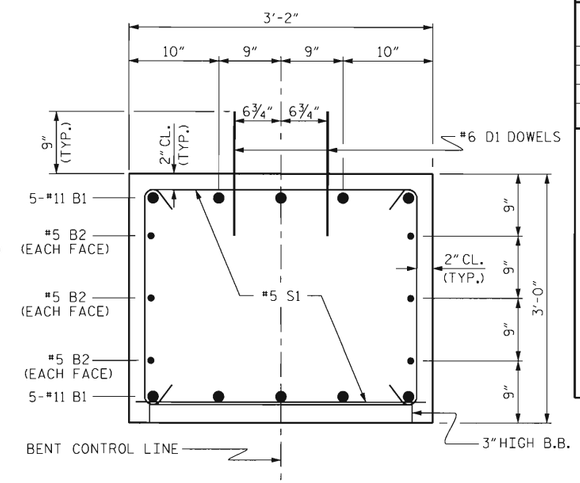

SECTION THRU CAP

BAR TYPES

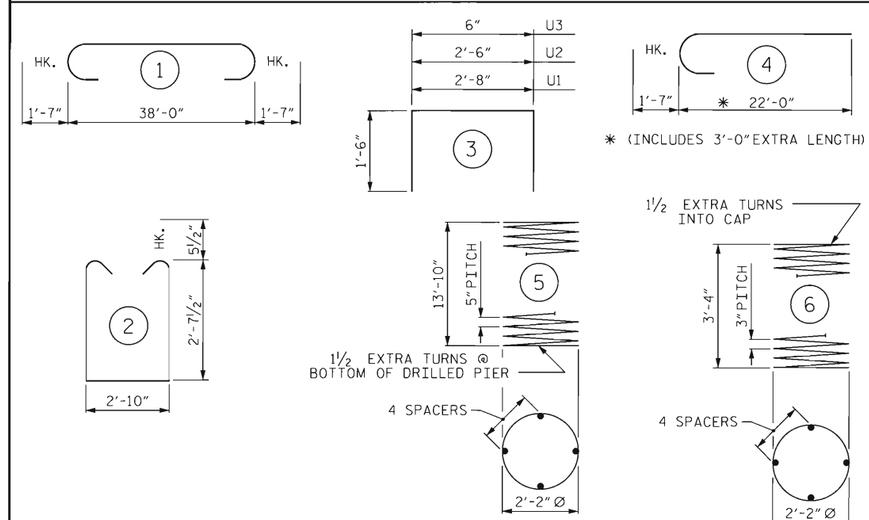

ALL BAR DIMENSIONS ARE OUT TO OUT

BILL OF MATERIAL

FOR ONE BENT

BAR	NO.	SIZE	TYPE	LENGTH	WEIGHT
B1	10	#11	1	41'-2"	2187
B2	6	#5	STR	38'-2"	239
B3	4	#4	STR	2'-10"	8
D1	48	#6	STR	1'-6"	108
M1	30	#11	4	23'-7"	3759
S1	68	#5	2	9'-0"	638
U1	6	#4	3	5'-8"	23
U2	6	#4	3	5'-6"	22
U3	8	#4	3	3'-6"	19

REINFORCING STEEL (FOR ONE BENT) 7003 LBS.

SP-1	3	*	5	231'-0"	723
SP-2	3	**	6	109'-2"	219

SPIRAL COLUMN REINFORCING STEEL (FOR ONE BENT) 942 LBS.

* THE SP-1 SPIRAL REINFORCING STEEL SHALL BE W31 OR D-31 COLD DRAWN WIRE OR #5 PLAIN OR DEFORMED BAR

** THE SP-2 SPIRAL REINFORCING STEEL SHALL BE W20 OR D-20 COLD DRAWN WIRE OR #4 PLAIN OR DEFORMED BAR

CLASS A CONCRETE BREAKDOWN (FOR ONE BENT)

POUR #2 (COLUMNS)	1.7 C.Y.
POUR #3 (CAP)	13.6 C.Y.
POUR #4 (LATERAL GUIDE)	0.1 C.Y.
TOTAL CLASS A CONCRETE	15.4 C.Y.

DRILLED PIERS: (FOR ONE BENT)

DRILLED PIER CONCRETE	
POUR #1 (DRILLED PIERS)	11.2 C.Y.
3'-0" Ø DRILLED PIER NOT IN SOIL	25.00 LIN. FT.
3'-0" Ø DRILLED PIER IN SOIL	17.90 LIN. FT.
PERMANENT STEEL CASING FOR 3'-0" Ø DRILLED PIER	25.9 LIN. FT.
CSL TUBES	189.6 LIN. FT.

PROJECT NO. 17BP.5.R.35

WAKE COUNTY

STATION: 13+70.00 -L-

SHEET 2 OF 2

STATE OF NORTH CAROLINA
DEPARTMENT OF TRANSPORTATION
RALEIGH

SUBSTRUCTURE

BENT No. 2

ASSEMBLED BY : J. PENDERGRAFT DATE : 9/12
CHECKED BY : J. DILWORTH DATE : 9/12

DRAWN BY : DGE 03/10
CHECKED BY : MKT 03/10

NORTH CAROLINA PROFESSIONAL SEAL 22072 ENGINEER JOHN ARTHUR DILWORTH 12-21-12

WETHERILL ENGINEERING
559 Jones Franklin Rd. Suite 164
Raleigh, N.C. 27606
Bus: 919 851 8077
Fax: 919 851 8107
License: F-0377

TRANSPORTATION PLANNING/DESIGN - BRIDGE/STRUCTURE DESIGN
CIVIL/SITE DESIGN - GIS/GPS - CONSTRUCTION OBSERVATION

REVISIONS						SHEET NO.
NO.	BY:	DATE:	NO.	BY:	DATE:	S-17
1			3			TOTAL SHEETS
2			4			19

STD. NO. DP_BT_36_90S_<50'

P:\2012\Wake #201\Structures\DGN\BR #201_BT 1.dgn
11/21/2013 2:45:4 AM

NOTES :

FOR BERM WIDTH DIMENSIONS, SEE GENERAL DRAWING.

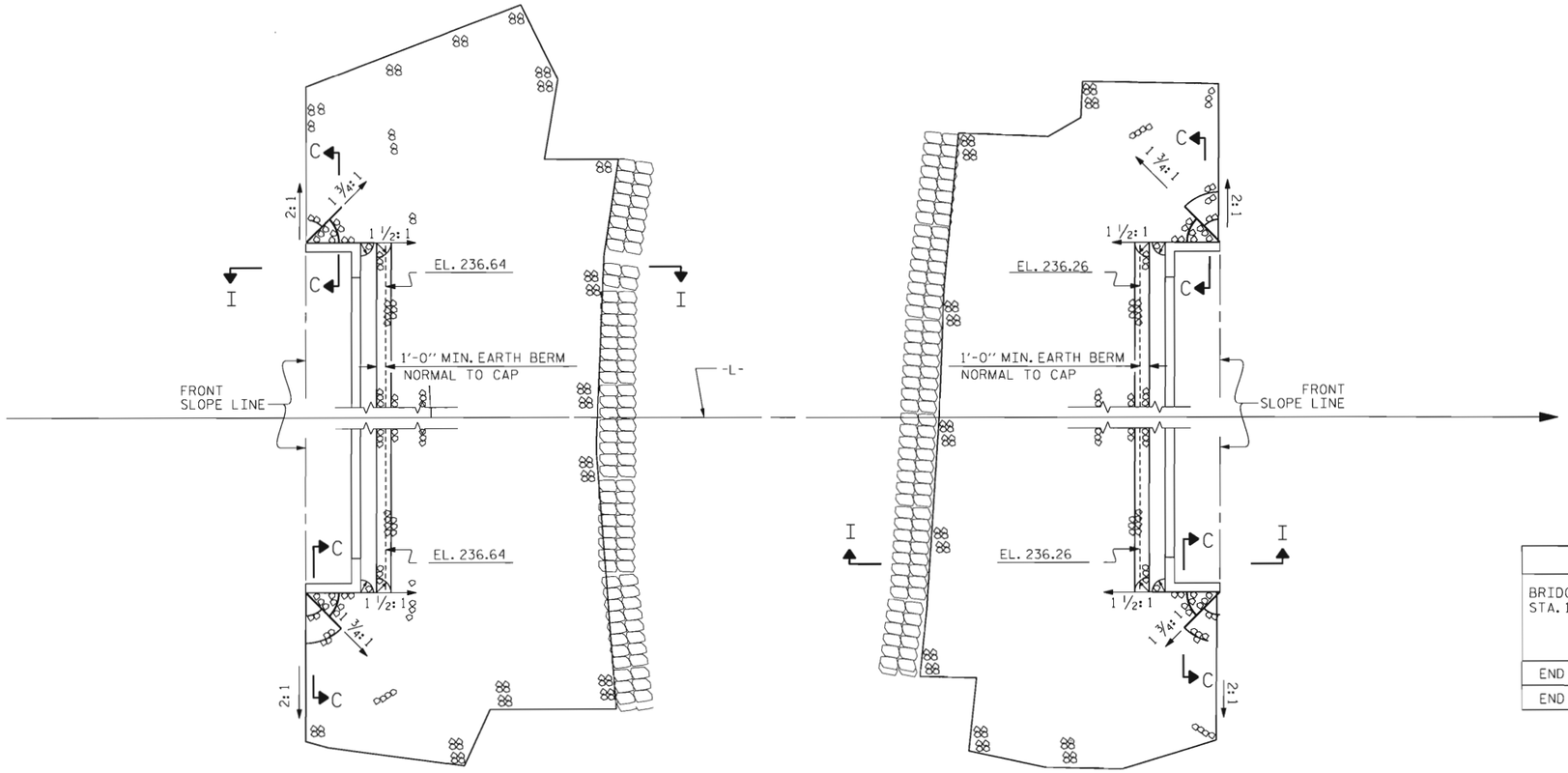

END BENT 1

END BENT 2

PLAN OF RIP RAP

ESTIMATED QUANTITIES		
BRIDGE @ STA. 13+70.00 -L-	RIP RAP CLASS II (2'-0" THICK)	GEOTEXTILE FOR DRAINAGE
	TONS	SQUARE YARDS
END BENT 1	270	300
END BENT 2	270	300

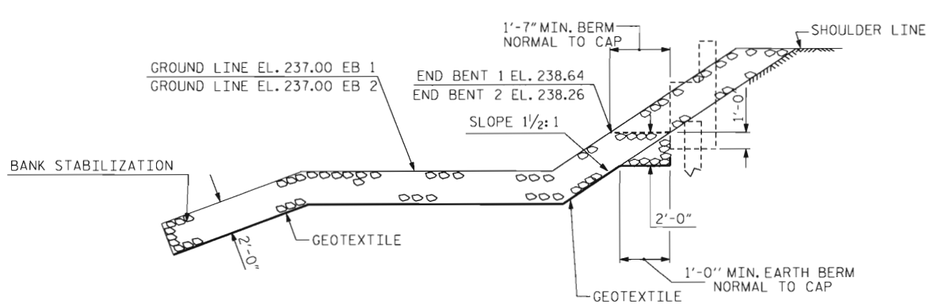

SECTION I-I

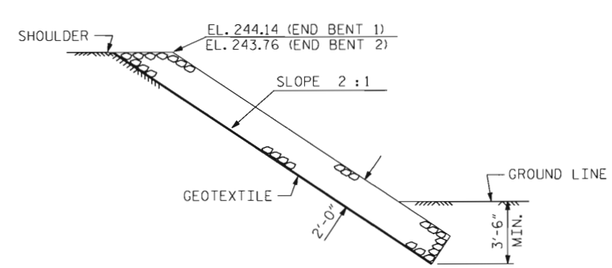

SECTION C-C

PROJECT NO. 17BP.5.R.35

WAKE COUNTY

STATION: 13+70.00 -L-

STATE OF NORTH CAROLINA
DEPARTMENT OF TRANSPORTATION
RALEIGH

STANDARD

RIP RAP DETAILS

REVISIONS								SHEET NO.
NO.	BY:	DATE:	NO.	BY:	DATE:			S-18
1			3					TOTAL SHEETS
2			4					19

NORTH CAROLINA PROFESSIONAL SEAL 22072 ENGINEER JOHN ARTHUR DILWORTH 12-11-13

WETHERILL ENGINEERING
559 Jones Franklin Rd. Suite 164
Raleigh, N.C. 27606
Bus: 919 851 8077
Fax: 919 851 8107
License: F-0377

TRANSPORTATION PLANNING/DESIGN - BRIDGE/STRUCTURE DESIGN
CIVIL/SITE DESIGN - GIS/GPS - CONSTRUCTION OBSERVATION

ASSEMBLED BY : J. PENDERGRAFT	DATE : 9/12		
CHECKED BY : J. DILWORTH	DATE : 9/12		
DRAWN BY : REK 1/84	REV. 5/1/06R	TLA/GM	
CHECKED BY : RDU 1/84	REV. 10/1/11	MAA/GM	
	REV. 12/21/11	MAA/GM	

P:\2012\Wake #201\Structures\DGN\BR #201 RR1.dgn
11/21/2013 7:25:51 AM

STD. NO. RR1 (Sht 2)

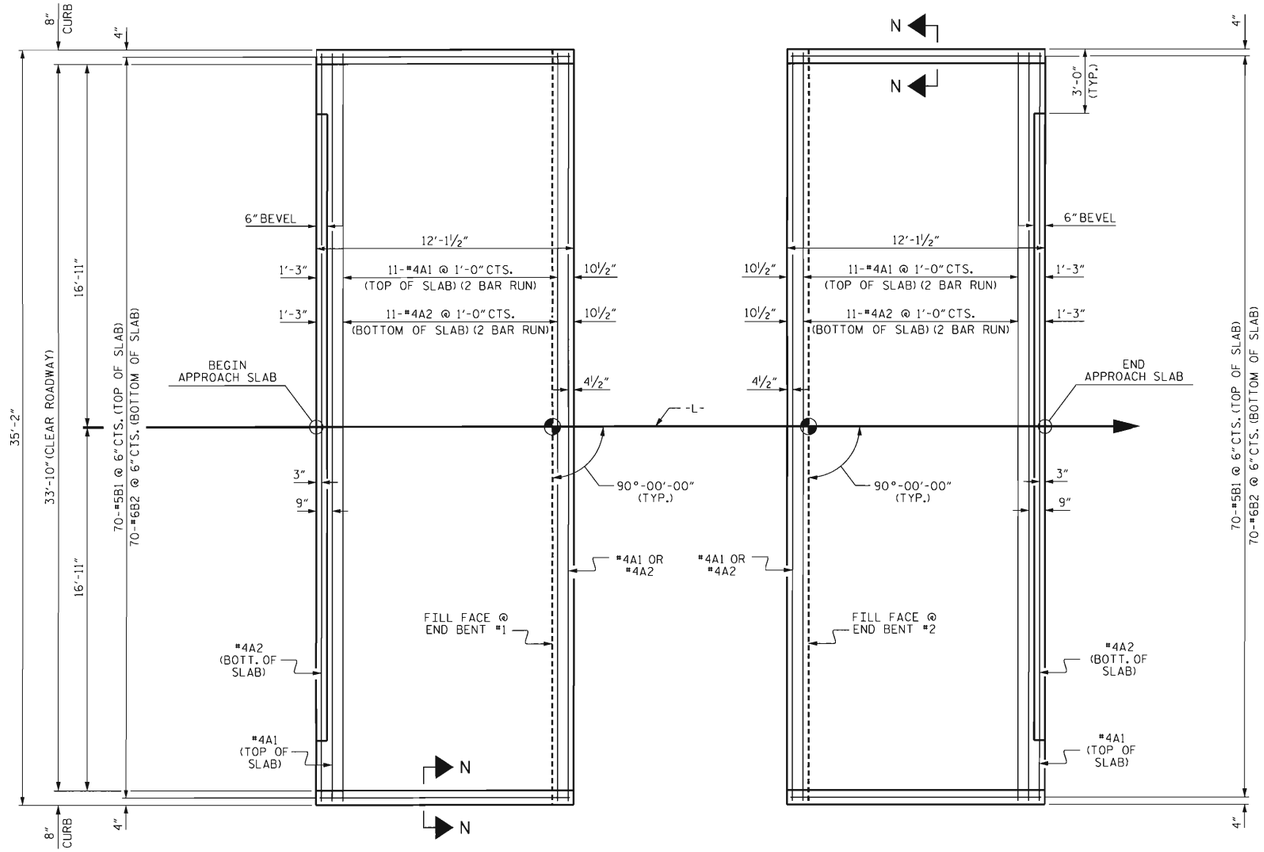

PLAN @ END BENT #1

PLAN @ END BENT #2

DIMENSIONS SHOWN ARE TYPICAL FOR BOTH APPROACH SLABS

NOTES

FOR BRIDGE APPROACH FILL INCLUDING GEOTEXTILE, 4"Ø DRAINAGE PIPE, AND #78M STONE BACKFILL, SEE ROADWAY PLANS.

GEOTEXTILE SHALL BE TYPE 1IN ACCORDANCE WITH THE STANDARD SPECIFICATIONS SECTION 1056.

#78M STONE BACKFILL (CLASS V SELECT MATERIAL) SHALL BE IN ACCORDANCE WITH STANDARD SPECIFICATIONS SECTION 1016.

#78M STONE BACKFILL IS TO BE CONTINUOUS ALONG FILL FACE OF BACKWALL FROM OUTSIDE EDGE TO OUTSIDE EDGE OF APPROACH SLAB.

FOR THE 4"Ø DRAINAGE PIPE OUTLET(S), SEE ROADWAY STANDARD DRAWINGS.

AREA BETWEEN THE WINGWALL AND APPROACH SLAB SHALL BE GRADED TO DRAIN THE WATER AWAY FROM THE FILL FACE OF THE BRIDGE AND SHALL BE PAVED. SEE ROADWAY PLANS.

APPROACH SLAB GROOVING IS NOT REQUIRED.

BILL OF MATERIAL

APPROACH SLAB AT EB #1

BAR	NO.	SIZE	TYPE	LENGTH	WEIGHT
* A1	26	#4	STR	18'-6"	321
A2	26	#4	STR	18'-4"	318
* B1	70	#5	STR	11'-2"	815
B2	70	#6	STR	11'-8"	1227
REINFORCING STEEL				LBS.	1545
* EPOXY COATED REINFORCING STEEL				LBS.	1136
CLASS AA CONCRETE				C. Y.	20.3

APPROACH SLAB AT EB #2

BAR	NO.	SIZE	TYPE	LENGTH	WEIGHT
* A1	26	#4	STR	18'-6"	321
A2	26	#4	STR	18'-4"	318
* B1	70	#5	STR	11'-2"	815
B2	70	#6	STR	11'-8"	1227
REINFORCING STEEL				LBS.	1545
* EPOXY COATED REINFORCING STEEL				LBS.	1136
CLASS AA CONCRETE				C. Y.	20.3

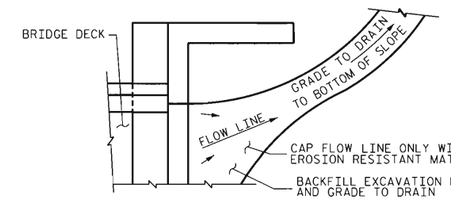

NOTE: IF THE APPROACH SLAB IS NOT CONSTRUCTED IMMEDIATELY AFTER THE BACKFILLING OF THE END BENT EXCAVATION, GRADE TO DRAIN TO THE BOTTOM OF THE SLOPE AND PROVIDE EROSION RESISTANT MATERIAL, SUCH AS FIBERGLASS ROVING OR AS DIRECTED BY THE ENGINEER TO PREVENT SOIL EROSION AND TO PROTECT THE AREA ADJACENT TO THE STRUCTURE. THE CONTRACTOR WILL BE REQUIRED TO REMOVE THESE MATERIALS PRIOR TO CONSTRUCTION OF THE APPROACH SLAB.

TEMPORARY DRAINAGE DETAIL

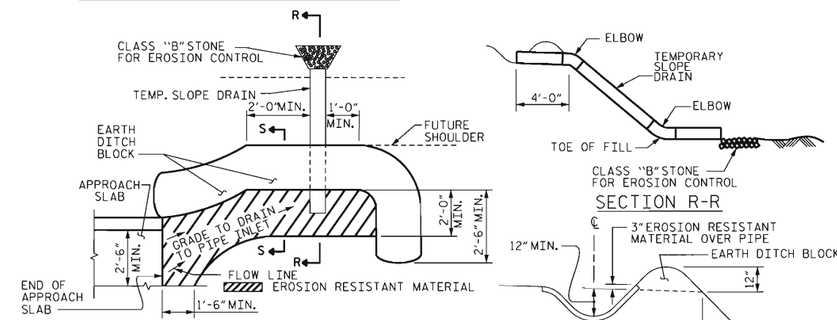

PLAN VIEW

NOTE: IMMEDIATELY AFTER THE CONSTRUCTION OF THE APPROACH SLAB, THE CONTRACTOR SHALL PROVIDE TEMPORARY BERM AND SLOPE DRAIN. CONTRACTOR SHALL GRADE TO PIPE INLET AND PROVIDE EROSION RESISTANT MATERIAL AS SHOWN. THE EROSION RESISTANT MATERIAL SHALL BE EITHER 1) ASPHALT PLANT MIX, TYPE 1 OR TYPE 2, MIN. 2" DEPTH, 2) EROSION CONTROL MAT, OR 3) CONCRETE, AS DIRECTED BY THE ENGINEER. THE SLOPE DRAIN SHALL CONSIST OF A NON-PERFORATED TEMPORARY DRAINAGE PIPE, 12 INCHES IN DIAMETER.

TEMPORARY BERM AND SLOPE DRAIN DETAILS

(TO BE USED WHEN SHOULDER BERM GUTTER IS REQUIRED)

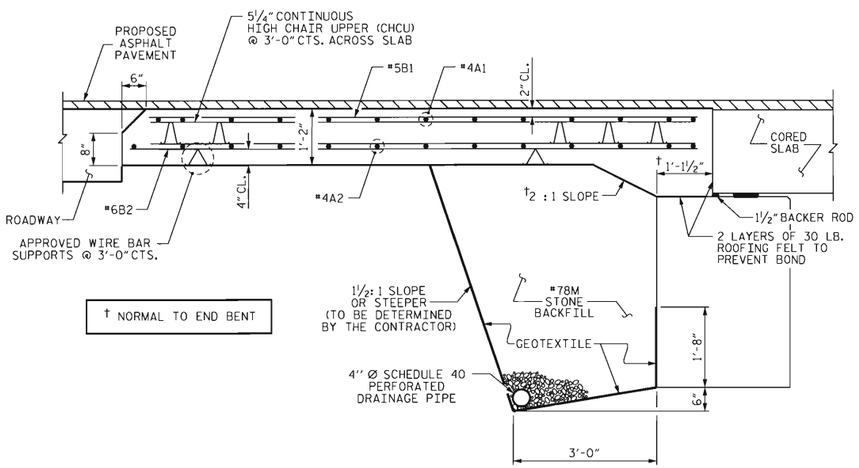

† NORMAL TO END BENT

SECTION THRU SLAB

SPLICE LENGTHS		
BAR SIZE	EPOXY COATED	UNCOATED
#4	2'-0"	1'-9"
#5	2'-6"	2'-2"
#6	3'-10"	2'-7"

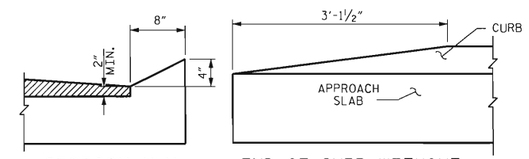

SECTION N-N

END OF CURB WITHOUT SHOULDER BERM GUTTER

CURB DETAILS

PROJECT NO. 17BP.5.R.35

WAKE COUNTY

STATION: 13+70.00 -L-

STATE OF NORTH CAROLINA
DEPARTMENT OF TRANSPORTATION
RALEIGH

STANDARD
BRIDGE APPROACH SLAB
FOR PRESTRESSED CONCRETE
CORED SLAB UNIT
(SUB-REGIONAL TIER)
90° SKEW

NORTH CAROLINA PROFESSIONAL SEAL 22072 ENGINEER JOHN ARTHUR DILWORTH 12-2-13

WETHERILL ENGINEERING
559 Jones Franklin Rd. Suite 164
Raleigh, N.C. 27606
Bus: 919 851 8077
Fax: 919 851 8107
License: F-0377
TRANSPORTATION PLANNING/DESIGN - BRIDGE/STRUCTURE DESIGN
CIVIL/SITE DESIGN - GIS/GPS - CONSTRUCTION OBSERVATION

REVISIONS							SHEET NO.
NO.	BY:	DATE:	NO.	BY:	DATE:		S-19
1			3				TOTAL SHEETS
2			4				19

ASSEMBLED BY : J. PENDERGRAFT DATE : 9-12
CHECKED BY : J. DILWORTH DATE : 9-12
DRAWN BY : SHS/MAA 5-09
CHECKED BY : BCH 5-09
REV. 12-11 MAA/AAC

P:\2012\Wake #201\Structures\DGN\BR #201 AS 1.dgn
11/21/2013 7:26:33 AM

STD. NO. BAS_36_90S

STANDARD NOTES

DESIGN DATA:

SPECIFICATIONS	A.A.S.H.T.O. (CURRENT)
LIVE LOAD	SEE PLANS
IMPACT ALLOWANCE	SEE A.A.S.H.T.O.
STRESS IN EXTREME FIBER OF	
STRUCTURAL STEEL - AASHTO M270 GRADE 36	20,000 LBS. PER SQ. IN.
- AASHTO M270 GRADE 50W	27,000 LBS. PER SQ. IN.
- AASHTO M270 GRADE 50	27,000 LBS. PER SQ. IN.
REINFORCING STEEL IN TENSION	
GRADE 60	24,000 LBS. PER SQ. IN.
CONCRETE IN COMPRESSION	1,200 LBS. PER SQ. IN.
CONCRETE IN SHEAR	SEE A.A.S.H.T.O.
STRUCTURAL TIMBER - TREATED OR	
UNTREATED - EXTREME FIBER STRESS	1,800 LBS. PER SQ. IN.
COMPRESSION PERPENDICULAR TO GRAIN OF TIMBER	375 LBS. PER SQ. IN.
EQUIVALENT FLUID PRESSURE OF EARTH	30 LBS. PER CU. FT. (MINIMUM)

MATERIAL AND WORKMANSHIP:

EXCEPT AS MAY OTHERWISE BE SPECIFIED ON PLANS OR IN THE SPECIAL PROVISIONS, ALL MATERIAL AND WORKMANSHIP SHALL BE IN ACCORDANCE WITH THE 2012 "STANDARD SPECIFICATIONS FOR ROADS AND STRUCTURES" OF THE N. C. DEPARTMENT OF TRANSPORTATION.

STEEL SHEET PILING FOR PERMANENT OR TEMPORARY APPLICATIONS SHALL BE HOT ROLLED.

CONCRETE:

UNLESS OTHERWISE REQUIRED ON PLANS, CLASS A CONCRETE SHALL BE USED FOR ALL PORTIONS OF ALL STRUCTURES WITH THE EXCEPTION THAT: CLASS AA CONCRETE SHALL BE USED IN BRIDGE SUPERSTRUCTURES, ABUTMENT BACKWALLS, AND APPROACH SLABS; AND CLASS B CONCRETE SHALL BE USED FOR SLOPE PROTECTION AND RIP RAP.

CONCRETE CHAMFERS:

UNLESS OTHERWISE NOTED ON THE PLANS, ALL EXPOSED CORNERS ON STRUCTURES SHALL BE CHAMFERED 3/4" WITH THE FOLLOWING EXCEPTIONS: TOP CORNERS OF CURBS MAY BE ROUNDED TO 1-1/2" RADIUS WHICH IS BUILT INTO CURB FORMS; CORNERS OF TRANSVERSE FLOOR EXPANSION JOINTS SHALL BE ROUNDED WITH A 1/4" FINISHING TOOL UNLESS OTHERWISE REQUIRED ON PLANS; AND CORNERS OF EXPANSION JOINTS IN THE ROADWAY FACES AND TOPS OF CURBS AND SIDEWALKS SHALL BE ROUNDED TO A 1/4" RADIUS WITH A FINISHING STONE OR TOOL UNLESS OTHERWISE REQUIRED ON PLANS.

DOWELS:

DOWELS WHEN INDICATED ON PLANS AS FOR CULVERT EXTENSIONS, SHALL BE EMBEDDED AT LEAST 12" INTO THE OLD CONCRETE AND GROUTED INTO PLACE WITH 1:2 CEMENT MORTAR.

ALLOWANCE FOR DEAD LOAD DEFLECTION, SETTLEMENT, ETC. IN CASTING SUPERSTRUCTURES:

BRIDGES SHALL BE BUILT ON THE GRADE OR VERTICAL CURVE SHOWN ON PLANS. SLABS, CURBS AND PARAPETS SHALL CONFORM TO THE GRADE OR CURVE.

ALL DIMENSIONS WHICH ARE GIVEN IN SECTION AND ARE AFFECTED BY DEAD LOAD DEFLECTIONS ARE DIMENSIONS AT CENTER LINE OF BEARING UNLESS OTHERWISE NOTED ON PLANS. IN SETTING FORMS FOR STEEL BEAM BRIDGES AND PRESTRESSED CONCRETE GIRDER BRIDGES, ADJUSTMENTS SHALL BE MADE DUE TO THE DEAD LOAD DEFLECTIONS FOR THE ELEVATIONS SHOWN. WHERE BLOCKS ARE SHOWN OVER BEAMS FOR BUILDING UP TO THE SLAB, THE VERTICAL DIMENSIONS OF THE BLOCKS SHALL BE ADJUSTED BETWEEN BEARINGS TO COMPENSATE FOR DEAD LOAD DEFLECTIONS, VERTICAL CURVE ORDINATE, AND ACTUAL BEAM CAMBER. WHERE BOTTOM OF SLAB IS IN LINE WITH BOTTOM OF TOP FLANGES, DEPTH OF SLAB BETWEEN BEARINGS SHALL BE ADJUSTED TO COMPENSATE FOR DEAD LOAD DEFLECTION, VERTICAL CURVE ORDINATE, AND ACTUAL BEAM CAMBER.

IN SETTING FALSEWORK AND FORMS FOR REINFORCED CONCRETE SPANS, AN ALLOWANCE SHALL BE MADE FOR DEAD LOAD DEFLECTIONS, SETTLEMENT OF FALSEWORK, AND PERMANENT CAMBER WHICH SHALL BE PROVIDED FOR IN ADDITION TO THE ELEVATIONS SHOWN. AFTER REMOVAL OF THE FALSEWORK, THE FINISHED STRUCTURES SHALL CONFORM TO THE PROFILE AND ELEVATIONS SHOWN ON THE PLANS AND CONSTRUCTION ELEVATIONS FURNISHED BY THE ENGINEER.

DETAILED DRAWINGS FOR FALSEWORK OR FORMS FOR BRIDGE SUPERSTRUCTURE AND ANY STRUCTURE OR PARTS OF A STRUCTURE AS NOTED ON THE PLANS SHALL BE SUBMITTED TO THE ENGINEER FOR APPROVAL BEFORE CONSTRUCTION OF THE FALSEWORK OR FORMS IS STARTED.

REINFORCING STEEL:

ALL REINFORCING STEEL SHALL BE DEFORMED. DIMENSIONS RELATIVE TO PLACEMENT OF REINFORCING ARE TO CENTERS OF BARS UNLESS OTHERWISE INDICATED IN THE PLANS. DIMENSIONS ON BAR DETAILS ARE TO CENTERS OF BARS OR ARE OUT TO OUT AS INDICATED ON PLANS.

WIRE BAR SUPPORTS SHALL BE PROVIDED FOR REINFORCING STEEL WHERE INDICATED ON THE PLANS. WHEN BAR SUPPORT PIECES ARE PLACED IN CONTINUOUS LINES, THEY SHALL BE SO PLACED THAT THE ENDS OF THE SUPPORTING WIRES SHALL BE LAPPED TO LOCK LEGS ON ADJOINING PIECES.

STRUCTURAL STEEL:

AT THE CONTRACTOR'S OPTION, HE MAY SUBSTITUTE 7/8" Ø SHEAR STUDS FOR THE 3/4" Ø STUDS SPECIFIED ON THE PLANS. THIS SUBSTITUTION SHALL BE MADE AT THE RATE OF 3 - 7/8" Ø STUDS FOR 4 - 3/4" Ø STUDS, AND STUD SPACING CHANGES SHALL BE MADE AS NECESSARY TO PROVIDE THE SAME EQUIVALENT NUMBER OF 7/8" Ø STUDS ALONG THE BEAM AS SHOWN FOR 3/4" Ø STUDS BASED ON THE RATIO OF 3 - 7/8" Ø STUDS FOR 4 - 3/4" Ø STUDS. STUDS OF THE LENGTH SPECIFIED ON THE PLANS MUST BE PROVIDED. THE MAXIMUM SPACING SHALL BE 2'-0".

EXCEPT AT THE INTERIOR SUPPORTS OF CONTINUOUS BEAMS WHERE THE COVER PLATE IS IN CONTACT WITH BEARING PLATE, THE CONTRACTOR MAY, AT HIS OPTION, SUBSTITUTE FOR THE COVER PLATES DESIGNATED ON THE PLANS COVER PLATES OF THE EQUIVALENT AREA PROVIDED THESE PLATES ARE AT LEAST 5/16" IN THICKNESS AND DO NOT EXCEED A WIDTH EQUAL TO THE FLANGE WIDTH LESS 2" OR A THICKNESS EQUAL TO 2 TIMES THE FLANGE THICKNESS. THE SIZE OF FILLET WELDS SHALL CONFORM TO THE REQUIREMENTS OF THE CURRENT ANSI/AASHTO/AWS "BRIDGE WELDING CODE". ELECTROSLAG WELDING WILL NOT BE PERMITTED.

WITH THE SOLE EXCEPTION OF EDGES AT SURFACES WHICH BEAR ON OTHER SURFACES, ALL SHARP EDGES AND ENDS OF SHAPES AND PLATES SHALL BE SLIGHTLY ROUNDED BY SUITABLE MEANS TO A RADIUS OF APPROXIMATELY 1/16 INCH OR EQUIVALENT FLAT SURFACE AT A SUITABLE ANGLE PRIOR TO PAINTING, GALVANIZING, OR METALLIZING.

HANDRAILS AND POSTS:

METAL STANDARDS AND FACES OF THE CONCRETE END POSTS FOR THE METAL RAIL SHALL BE SET NORMAL TO THE GRADE OF THE CURB, UNLESS OTHERWISE SHOWN ON PLANS. THE METAL RAIL AND TOPS OF CONCRETE POSTS USED WITH THE ALUMINUM RAIL SHALL BE BUILT PARALLEL TO THE GRADE OF THE CURB.

METAL HANDRAILS SHALL BE IN ACCORDANCE WITH THE PLANS. RAILS SHALL BE AS MANUFACTURED FOR BRIDGE RAILING. CASTINGS SHALL BE OF A UNIFORM APPEARANCE. FINS AND OTHER DEFORMATIONS RESULTING FROM CASTING OR OTHERWISE SHALL BE REMOVED IN A MANNER SO THAT A UNIFORM COLORING OF THE COMPLETED CASTING SHALL BE OBTAINED. CASTINGS WITH DISCOLORATIONS OR OF NON-UNIFORM COLORING WILL NOT BE ACCEPTED. CERTIFIED MILL REPORTS ARE REQUIRED FOR METAL RAILS AND POSTS.

SPECIAL NOTES:

GENERALLY, IN CASE OF DISCREPANCY, THIS STANDARD SHEET OF NOTES SHALL GOVERN OVER THE SPECIFICATIONS, BUT THE REMAINDER OF THE PLANS SHALL GOVERN OVER NOTES HEREON, AND SPECIAL PROVISIONS SHALL GOVERN OVER ALL. SEE SPECIFICATIONS ARTICLE 105-4.

ENGLISH

JANUARY, 1990

STD. NO. SN