DocuSign Envelope ID: 28BF53E9-44FA-477E-B2A2-BEB32F59FC19

09/08/99

PROJECT: 17BP.5.R.48

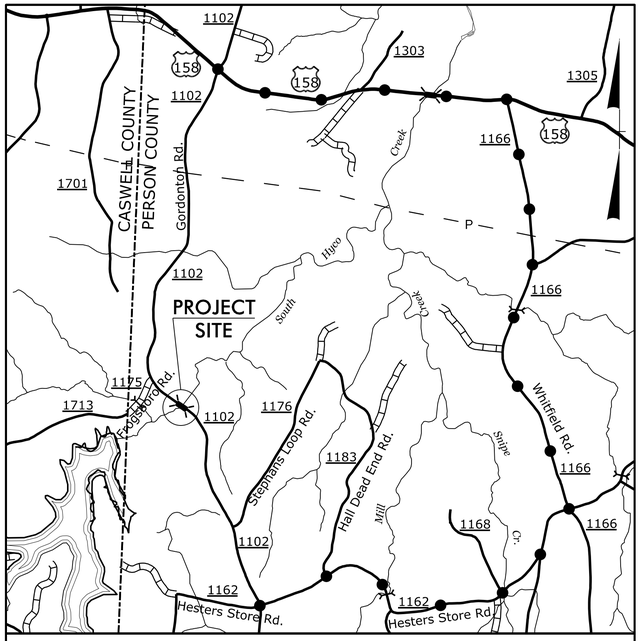

VICINITY MAP FOR 17BP.5.R.48

STATE OF NORTH CAROLINA
DIVISION OF HIGHWAYS

PERSON COUNTY

STATE	STATE PROJECT REFERENCE NO.	SHEET NO.	TOTAL SHEETS
N.C.	17BP.5.R.48	1	

STATE PROJ. NO.	F. A. PROJ. NO.	DESCRIPTION
17BP.5.R.48	N/A	PE
17BP.5.R.48	N/A	ROW & UTILITIES
17BP.5.R.48	N/A	CONSTRUCTION

STEWART
421 FAYETTEVILLE ST, STE 400
RALEIGH, NC 27601
T 919.380.8750
Firm License #: C-1051
www.stewartinc.com
PROJECT #:814001.04

ECOLOGICAL ENGINEERING
NC FIRM LICENSE No: F-1148
1151 SE Cary Parkway
Suite 101
Cary, NC 27518
(919) 557-6929

LOCATION: ***BRIDGE NO. 45 OVER SOUTH HYCO CREEK ON SR 1102 (GORDONTON ROAD)***

TYPE OF WORK: ***GRADING, PAVING, DRAINAGE, AND STRUCTURE***

NAD 83/ NSRS 2011

OFFSITE DETOUR ROUTE
See Sheet 1-A For Index of Sheets
See Sheet 1-B For Conventional Symbols

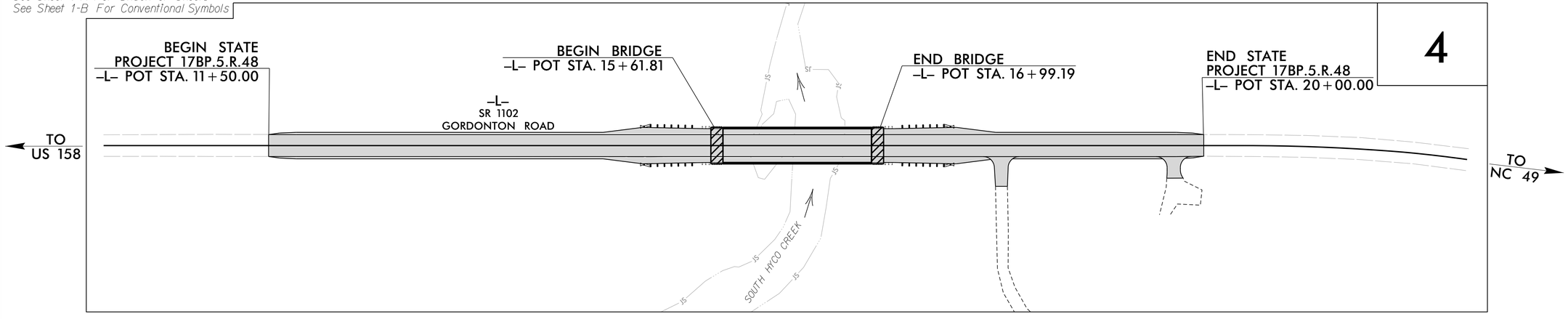

DOCUMENT NOT CONSIDERED FINAL UNLESS ALL SIGNATURES COMPLETED

DESIGN EXCEPTION REQUIRED FOR SAG VERTICAL CURVE K AND VERTICAL SSD

CONTRACT:

GRAPHIC SCALES

50 25 0 50 100
PLANS

50 25 0 50 100
PROFILE (HORIZONTAL)

10 5 0 10 20
PROFILE (VERTICAL)

DESIGN DATA

ADT = 500
K = N/A
D = N/A
T = N/A *
* (TTST N/A + DUAL N/A)
V = 55 MPH
CLASS = RURAL LOCAL

SUBREGIONAL TIER

PROJECT LENGTH

LENGTH ROADWAY PROJECT 17BP.5.R.48	=	0.135 mi.
LENGTH STRUCTURE PROJECT 17BP.5.R.48	=	0.026 mi.
TOTAL LENGTH PROJECT 17BP.5.R.48	=	0.161 mi.

Prepared in the Office of:
STEWART, Inc.
For
NORTH CAROLINA DEPARTMENT OF TRANSPORTATION

2012 STANDARD SPECIFICATIONS

RIGHT OF WAY DATE:
OCTOBER 03, 2014

RIGHT OF WAY COMPLETE:
MARCH 5, 2015

LETTING DATE:
APRIL 13, 2016

ANDY YOUNG, PE
PROJECT ENGINEER

MICHAEL BURNS, EI
PROJECT DESIGN ENGINEER

LISA GILCHRIST, EI
NCDOT CONTACT

HYDRAULICS ENGINEER
DocuSigned by: Brandon Barham 2/24/2016
SIGNATURE: *P.E.*
NORTH CAROLINA PROFESSIONAL SEAL 039102 ENGINEER BRANDON T. BARHAM

ROADWAY DESIGN ENGINEER
DocuSigned by: Andrew P. Young 2/24/2016
SIGNATURE: *P.E.*
NORTH CAROLINA PROFESSIONAL SEAL 034407 ENGINEER ANDREW P. YOUNG

STATE OF NORTH CAROLINA DEPARTMENT OF TRANSPORTATION

2/23/2016
:\Proj\720045_RDY_PSH01.dgn
USER:mburns

DocuSign Envelope ID: 28BF53E9-44FA-477E-B2A2-BEB32F59FC19

8/17/99

PROJECT REFERENCE NO.	SHEET NO.
17.BP.5.R.48	1-A

ROADWAY DESIGN ENGINEER

NORTH CAROLINA PROFESSIONAL SEAL 034407 ENGINEER ANDREW P. YOUNG

DocuSigned by: Andrew P. Young 2/24/2016

Firm License No. C-1205
421 Fayetteville St.
Suite 400
Raleigh, NC 27601
P: 919.380.8750
www.stewartinc.com

STEWART

DOCUMENT NOT CONSIDERED FINAL UNLESS ALL SIGNATURES COMPLETED

STATE OF NORTH CAROLINA
DIVISION OF HIGHWAYS

INDEX OF SHEETS, GENERAL NOTES, AND LIST OF STANDARD DRAWINGS

INDEX OF SHEETS

SHEET NUMBER	SHEET
1	TITLE SHEET
1-A	INDEX OF SHEETS, GENERAL NOTES, AND LIST OF STANDARD DRAWINGS
1-B	CONVENTIONAL SYMBOLS
1C-1	SURVEY CONTROL SHEET
2A-1	PAVEMENT SCHEDULE, TYPICAL SECTIONS, AND WEDGING DETAILS
2C-1	GUARDRAIL ANCHOR DETAIL
3B-1	ROADWAY SUMMARY
3D-1	DRAINAGE SUMMARY
4	PLAN SHEET
5	PROFILE SHEET
TMP-1 THRU TMP-3	TRAFFIC CONTROL PLANS
PMP-1	PAVEMENT MARKING PLANS
EC-1 THRU EC-05	EROSION CONTROL PLANS
UO-1 THRU UO-2	UTILTY BY OTHER PLANS
X-1A	CROSS-SECTION SUMMARY SHEET
X-1 THRU X-5	CROSS-SECTIONS
S-1 THRU S-20	STRUCTURE PLANS

EFF. 01-17-2012
REV. 10-30-2012

2012 ROADWAY ENGLISH STANDARD DRAWINGS

The following Roadway Standards as appear in "Roadway Standard Drawings" Highway Design Branch - N. C. Department of Transportation - Raleigh, N. C., Dated January, 2012 are applicable to this project and by reference hereby are considered a part of these plans:

STD.NO.	TITLE
DIVISION 2 - EARTHWORK	
200.03	Method of Clearing - Method III
225.02	Guide for Grading Subgrade - Secondary and Local
225.04	Method of Obtaining Superelevation - Two Lane Pavement
DIVISION 3 - PIPE CULVERTS	
300.01	Method of Pipe Installation
310.10	Driveway Pipe Construction
DIVISION 4 - MAJOR STRUCTURES	
422.10	Reinforced Bridge Approach Fills
DIVISION 5 - SUBGRADE, BASES AND SHOULDERS	
560.01	Method of Shoulder Construction - High Side of Superelevated Curve - Method I
DIVISION 8 - INCIDENTALS	
806.01	Concrete Right-of-Way Marker
806.02	Granite Right-of-Way Marker
840.00	Concrete Base Pad for Drainage Structures
840.29	Frames and Narrow Slot Flat Grates
840.35	Traffic Bearing Grated Drop Inlet - for Cast Iron Double Frame and Grates
840.46	Traffic Bearing Precast Drainage Structure
846.01	Concrete Curb, Gutter and Curb & Gutter
846.04	Drop Inlet Installation in Shoulder Berm Gutter
848.02	Driveway Turnout - Radius Type
862.01	Guardrail Placement
862.02	Guardrail Installation
862.03	Structure Anchor Units
876.02	Guide for Rip Rap at Pipe Outlets
876.04	Drainage Ditches with Class 'B' Rip Rap

GENERAL NOTES:

2012 SPECIFICATIONS
EFFECTIVE: 01-17-2012
REVISED: 10-31-2014

GRADE LINE:
GRADING AND SURFACING:

THE GRADE LINES SHOWN DENOTE THE FINISHED ELEVATION OF THE PROPOSED SURFACING AT GRADE POINTS SHOWN ON THE TYPICAL SECTIONS. GRADE LINES MAY BE ADJUSTED AT THEIR BEGINNING AND ENDING AND AT STRUCTURES AS DIRECTED BY THE ENGINEER IN ORDER TO SECURE A PROPER TIE-IN.

CLEARING:

CLEARING ON THIS PROJECT SHALL BE PERFORMED TO THE LIMITS ESTABLISHED BY METHOD III.

SUPERELEVATION:

ALL CURVES ON THIS PROJECT SHALL BE SUPERELEVATED IN ACCORDANCE WITH STD. NO. 225.04 USING THE RATE OF SUPERELEVATION AND RUNOFF SHOWN ON THE PLANS. SUPERELEVATION IS TO BE REVOLVED ABOUT THE GRADE POINTS SHOWN ON THE TYPICAL SECTIONS.

SHOULDER CONSTRUCTION:

ASPHALT, EARTH, AND CONCRETE SHOULDER CONSTRUCTION ON THE HIGH SIDE OF SUPERELEVATED CURVES SHALL BE IN ACCORDANCE WITH STD. NO. 560.01

GUARDRAIL:

THE GUARDRAIL LOCATIONS SHOWN ON THE PLANS MAY BE ADJUSTED DURING CONSTRUCTION AS DIRECTED BY THE ENGINEER. THE CONTRACTOR SHOULD CONSULT WITH THE ENGINEER PRIOR TO ORDERING GUARDRAIL MATERIAL.

END BENTS:

THE SURVEYOR SHALL CHECK THE STRUCTURE END BENT PLANS, DETAILS, AND CROSS-SECTION PRIOR TO SETTING OF THE SLOPE STAKES FOR THE EMBANKMENT OR EXCAVATION APPROACHING A BRIDGE.

UTILITIES:

UTILITY OWNERS ON THIS PROJECT ARE

DUKE ENERGY PROGRESS - POWER

ANY RELOCATION OF EXISTING UTILITIES WILL BE ACCOMPLISHED BY OTHERS.

RIGHT-OF-WAY MARKERS:

ALL RIGHT-OF-WAY MARKERS ON THIS PROJECT SHALL BE PLACED BY CONTRACT.

2/23/2016
R:\Roadway\Proj\17BP5R48_RDY_PSH01A.dgn
USER: kbrown

02/03/15

PROJECT REFERENCE NO.	SHEET NO.
17BP.5.R.48	1-B

Note: Not to Scale

****S.U.E. = Subsurface Utility Engineering***

STATE OF NORTH CAROLINA
DIVISION OF HIGHWAYS

CONVENTIONAL PLAN SHEET SYMBOLS

BOUNDARIES AND PROPERTY:

- State Line
- County Line
- Township Line
- City Line
- Reservation Line
- Property Line
- Existing Iron Pin — EIP
- Property Corner
- Property Monument — ECM
- Parcel/Sequence Number — 123
- Existing Fence Line
- Proposed Woven Wire Fence
- Proposed Chain Link Fence
- Proposed Barbed Wire Fence
- Existing Wetland Boundary — WLB
- Proposed Wetland Boundary — WLB
- Existing Endangered Animal Boundary — EAB
- Existing Endangered Plant Boundary — EPB
- Existing Historic Property Boundary — HPB
- Known Soil Contamination: Area or Site
- Potential Soil Contamination: Area or Site

BUILDINGS AND OTHER CULTURE:

- Gas Pump Vent or U/G Tank Cap
- Sign — S
- Well — W
- Small Mine
- Foundation
- Area Outline
- Cemetery
- Building
- School
- Church
- Dam

HYDROLOGY:

- Stream or Body of Water
- Hydro, Pool or Reservoir
- Jurisdictional Stream — JS
- Buffer Zone 1 — BZ 1
- Buffer Zone 2 — BZ 2
- Flow Arrow
- Disappearing Stream
- Spring
- Wetland
- Proposed Lateral, Tail, Head Ditch — FLOW
- False Sump

RAILROADS:

- Standard Gauge — CSX TRANSPORTATION
- RR Signal Milepost — MILEPOST 35
- Switch — SWITCH
- RR Abandoned
- RR Dismantled

RIGHT OF WAY:

- Baseline Control Point
- Existing Right of Way Marker
- Existing Right of Way Line
- Proposed Right of Way Line — RW
- Proposed Right of Way Line with Iron Pin and Cap Marker — RW
- Proposed Right of Way Line with Concrete or Granite R/W Marker — RW
- Proposed Control of Access Line with Concrete C/A Marker — CA
- Existing Control of Access — CA
- Proposed Control of Access — CA
- Existing Easement Line — E
- Proposed Temporary Construction Easement — E
- Proposed Temporary Drainage Easement — TDE
- Proposed Permanent Drainage Easement — PDE
- Proposed Permanent Drainage / Utility Easement — DUE
- Proposed Permanent Utility Easement — PUE
- Proposed Temporary Utility Easement — TUE
- Proposed Aerial Utility Easement — AUE
- Proposed Permanent Easement with Iron Pin and Cap Marker

ROADS AND RELATED FEATURES:

- Existing Edge of Pavement
- Existing Curb
- Proposed Slope Stakes Cut — C
- Proposed Slope Stakes Fill — F
- Proposed Curb Ramp — CR
- Existing Metal Guardrail
- Proposed Guardrail
- Existing Cable Guiderail
- Proposed Cable Guiderail
- Equality Symbol
- Pavement Removal

VEGETATION:

- Single Tree
- Single Shrub
- Hedge
- Woods Line
- Orchard
- Vineyard — Vineyard

EXISTING STRUCTURES:

MAJOR:

- Bridge, Tunnel or Box Culvert — CONC
- Bridge Wing Wall, Head Wall and End Wall — CONC WW

MINOR:

- Head and End Wall — CONC HW
- Pipe Culvert
- Footbridge
- Drainage Box: Catch Basin, DI or JB — CB
- Paved Ditch Gutter
- Storm Sewer Manhole — S
- Storm Sewer — S

UTILITIES:

POWER:

- Existing Power Pole
- Proposed Power Pole
- Existing Joint Use Pole
- Proposed Joint Use Pole
- Power Manhole — P
- Power Line Tower
- Power Transformer
- U/G Power Cable Hand Hole
- H-Frame Pole
- Recorded U/G Power Line — P
- Designated U/G Power Line (S.U.E.*) — P

TELEPHONE:

- Existing Telephone Pole
- Proposed Telephone Pole
- Telephone Manhole — T
- Telephone Booth
- Telephone Pedestal — T
- Telephone Cell Tower
- U/G Telephone Cable Hand Hole — HH
- Recorded U/G Telephone Cable — T
- Designated U/G Telephone Cable (S.U.E.*) — T
- Recorded U/G Telephone Conduit — TC
- Designated U/G Telephone Conduit (S.U.E.*) — TC
- Recorded U/G Fiber Optics Cable — T FO
- Designated U/G Fiber Optics Cable (S.U.E.*) — T FO

WATER:

- Water Manhole — W
- Water Meter
- Water Valve
- Water Hydrant
- Recorded U/G Water Line — W
- Designated U/G Water Line (S.U.E.*) — W
- Above Ground Water Line — A/G Water

TV:

- TV Satellite Dish
- TV Pedestal — C
- TV Tower
- U/G TV Cable Hand Hole — HH
- Recorded U/G TV Cable — TV
- Designated U/G TV Cable (S.U.E.*) — TV
- Recorded U/G Fiber Optic Cable — TV FO
- Designated U/G Fiber Optic Cable (S.U.E.*) — TV FO

GAS:

- Gas Valve
- Gas Meter
- Recorded U/G Gas Line — G
- Designated U/G Gas Line (S.U.E.*) — G
- Above Ground Gas Line — A/G Gas

SANITARY SEWER:

- Sanitary Sewer Manhole
- Sanitary Sewer Cleanout
- U/G Sanitary Sewer Line — SS
- Above Ground Sanitary Sewer — A/G Sanitary Sewer
- Recorded SS Forced Main Line — FSS
- Designated SS Forced Main Line (S.U.E.*) — FSS

MISCELLANEOUS:

- Utility Pole
- Utility Pole with Base
- Utility Located Object
- Utility Traffic Signal Box — S
- Utility Unknown U/G Line — ?UTL
- U/G Tank; Water, Gas, Oil
- Underground Storage Tank, Approx. Loc. — UST
- A/G Tank; Water, Gas, Oil
- Geoenvironmental Boring
- U/G Test Hole (S.U.E.*)
- Abandoned According to Utility Records — AATUR
- End of Information — E.O.I.

PROJECT REFERENCE NO.	SHEET NO.
17BP.5.R.48	1C
Location and Surveys	

SURVEY CONTROL SHEET 72–0045

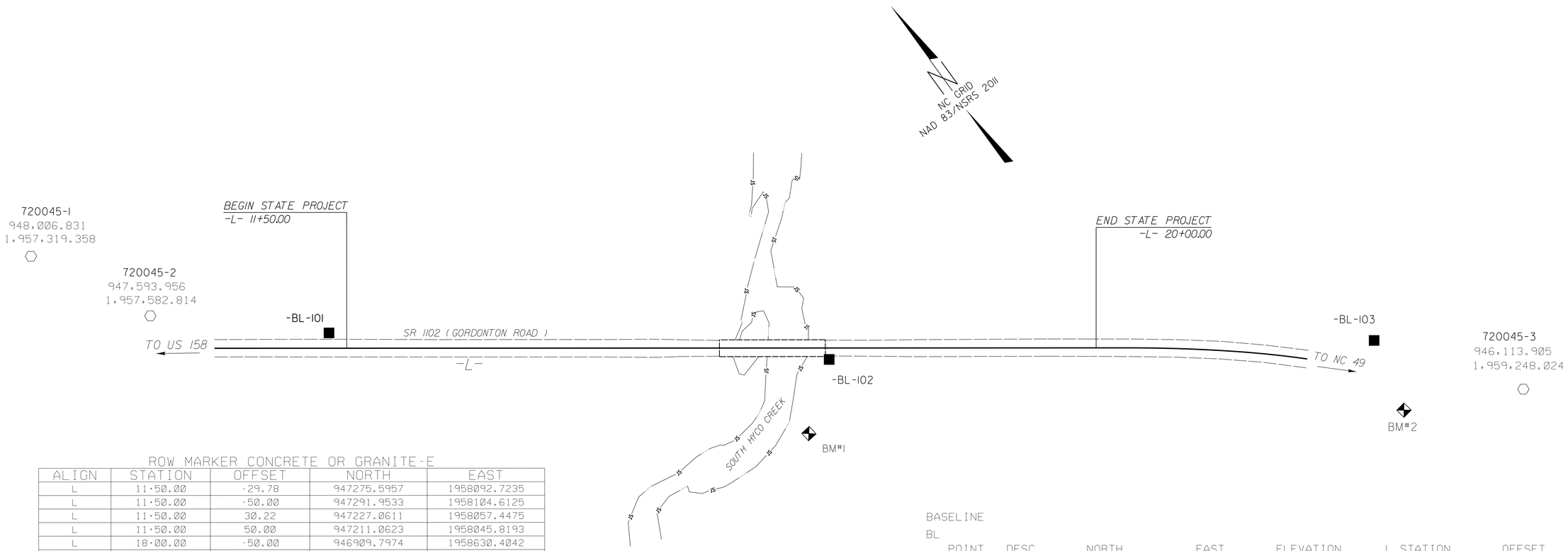

ROW MARKER CONCRETE OR GRANITE-E

ALIGN	STATION	OFFSET	NORTH	EAST
L	11+50.00	-29.78	947275.5957	1958092.7235
L	11+50.00	-50.00	947291.9533	1958104.6125
L	11+50.00	30.22	947227.0611	1958057.4475
L	11+50.00	50.00	947211.0623	1958045.8193
L	18+00.00	-50.00	946909.7974	1958630.4042
L	18+00.00	-29.80	946893.4600	1958618.5298
L	18+35.00	50.00	946808.3287	1958599.9228
L	19+40.00	35.00	946758.7295	1958693.6773
L	20+00.00	35.00	946723.4536	1958742.2120
L	20+00.00	29.47	946727.9250	1958745.4619

BASELINE
BL

POINT	DESC.	NORTH	EAST	ELEVATION	L STATION	OFFSET
101	BL-101	947277.3800	1958069.1390	452.75	11+29.87	17.36 LT
102	BL-102	946919.1750	1958510.1950	442.52	16+97.25	13.09 RT
103	BL-103	946573.1120	1959022.6640	486.58	OUTSIDE PROJECT LIMITS	

BENCHMARK DATA

****
BM1 ELEVATION = 439.62
N 946865 E 1958442
L STATION 16+74 RT
BENCH TIE IN 24" ASH
****

****
BM2 ELEVATION = 493.03
N 946489 E 1959004
L STATION 22+40
S 26°05'19.64" E DIST 124'
RR SPIKE IN 24" SYCAMORE
****

L

TYPE	STATION	NORTH	EAST
POT	10+00.00	947339.6977	1957953.8794
PC	20+36.92	946730.0604	1958792.6526
PCC	21+63.71	946651.8977	1958892.4517
PT	22+39.94	946600.7792	1958948.9869

DATUM DESCRIPTION

THE LOCALIZED COORDINATE SYSTEM DEVELOPED FOR THIS PROJECT IS BASED ON THE STATE PLANE COORDINATES ESTABLISHED BY NCDOT FOR MONUMENT "72-0045-1"
WITH NAD 83/NSRS 2011 STATE PLANE GRID COORDINATES OF
NORTHING: 948006.831(ft) EASTING: 1957319.358(ft)
ELEVATION: 505.39'(ft)
THE AVERAGE COMBINED GRID FACTOR USED ON THIS PROJECT (GROUND TO GRID) IS: 1.00003766
THE N.C. LAMBERT GRID BEARING AND LOCALIZED HORIZONTAL GROUND DISTANCE FROM "72-0045-1" TO -L- STATION 11+50.00 IS
S 45°01'13" E 1068.57'
ALL LINEAR DIMENSIONS ARE LOCALIZED HORIZONTAL DISTANCES
VERTICAL DATUM USED IS NAVD 88

GEOID G12NC

NOTE: DRAWING NOT TO SCALE

NOTES:

SITE CALIBRATION INFORMATION HAS NOT BEEN PROVIDED FOR THIS PROJECT. IF FURTHER INFORMATION IS NEEDED, PLEASE CONTACT THE LOCATION AND SURVEYS UNIT.

⬡ *INDICATES GEODETIC CONTROL MONUMENTS USED OR SET FOR HORIZONTAL PROJECT CONTROL BY THE NCDOT LOCATION AND SURVEYS UNIT.*

PROJECT CONTROL ESTABLISHED USING GLOBAL POSITIONING SYSTEM.

9/14/15
2/23/2016
13:20:04 \\Proj\720045.ls.1c.dgn
USER:RHUNTER

DocuSign Envelope ID: E5B41D1B-E983-498D-B9BC-6AB02056EC18

PROJECT REFERENCE NO.	SHEET NO.
17BP.5.R.48	2A-1

ROADWAY DESIGN ENGINEER
NORTH CAROLINA PROFESSIONAL SEAL 034407 ENGINEER ANDREW P. YOUNG
DocuSigned by: Andrew P. Young 2/23/2016

PAVEMENT DESIGN ENGINEER
NORTH CAROLINA PROFESSIONAL SEAL 22896 ENGINEER CLARK T. MORRISON
DocuSigned by: Clark Morrison 2/24/2016

STEWART
Firm License No. C-1051
421 Fayetteville St.
Suite 400
Raleigh, NC 27601
T 919.380.8750
www.stewartinc.com

DOCUMENT NOT CONSIDERED FINAL UNLESS ALL SIGNATURES COMPLETED

PAVEMENT SCHEDULE

(FINAL PAVEMENT DESIGN)

C1	PROP. APPROX. 1½″ ASPHALT CONCRETE SURFACE COURSE, TYPE SF9.5A, AT AN AVERAGE RATE OF 165 LBS. PER SQ. YD.
C2	PROP. VAR. DEPTH ASPHALT CONCRETE SURFACE COURSE, TYPE SF9.5A, AT AN AVERAGE RATE OF 110 LBS. PER SQ. YD. PER 1″ DEPTH. TO BE PLACED IN LAYERS NOT TO EXCEED 1½″ IN DEPTH.
D1	PROP. APPROX. 3½″ ASPHALT CONCRETE INTERMEDIATE COURSE, TYPE I19.0B, AT AN AVERAGE RATE OF 399 LBS. PER SQ. YD.
D2	PROP. VAR. DEPTH ASPHALT CONCRETE INTERMEDIATE COURSE, TYPE I19.0B, AT AN AVERAGE RATE OF 114 LBS. PER SQ. YD. PER 1″ DEPTH, TO BE PLACED IN LAYERS NOT LESS THAN 2½″ IN DEPTH OR GREATER THAN 4″ IN DEPTH.
E1	PROP. APPROX. 4″ ASPHALT CONCRETE BASE COURSE, TYPE B25.0B, AT AN AVERAGE RATE OF 456 LBS. PER SQ. YD.
R1	PROPOSED SHOULDER BERM GUTTER.
T	EARTH MATERIAL.
W	WEDGING (SEE THIS SHEET FOR WEDGING DETAIL)

NOTE: PAVEMENT EDGE SLOPES ARE 1:1 UNLESS SHOWN OTHERWISE.

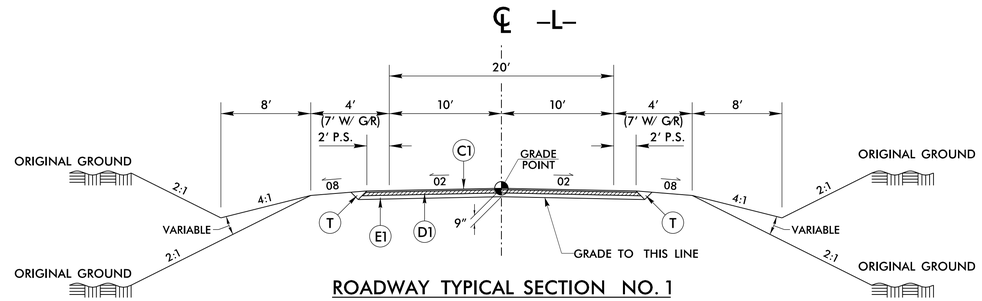

ROADWAY TYPICAL SECTION NO. 1

–L– STA. 11+50.00 TO –L– STA. 15+61.81 (BEGIN BRIDGE)
–L– STA. 16+99.19 (END BRIDGE) TO –L– STA. 20+00.00

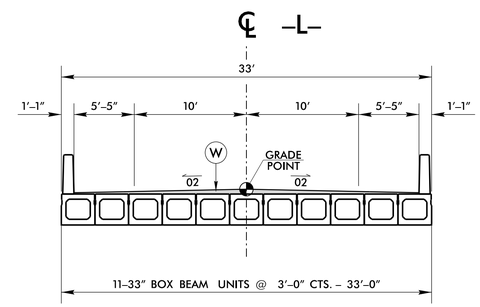

BRIDGE TYPICAL SECTION

–L– STA. 15+61.81 TO –L– STA. 16+99.19
NOTE: SEE STRUCTURE PLANS FOR ASPHALT WEARING SURFACE

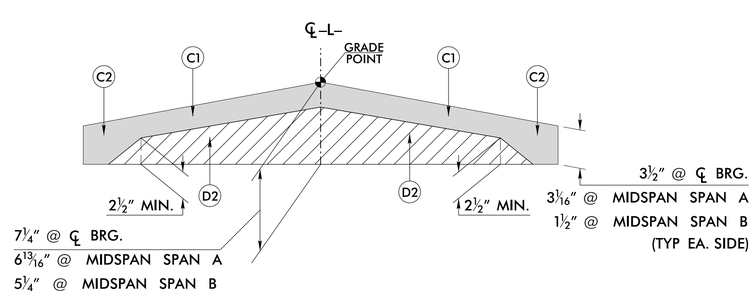

DETAIL SHOWING METHOD OF WEDGING ON BRDGE

USE IN CONJUNCTION WITH BRIDGE TYPICAL SECTION

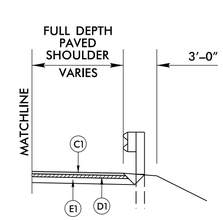

DETAIL SHOWING PAVING TO THE FACE OF GUARDRAIL

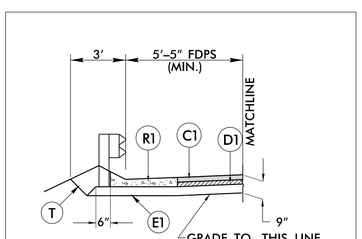

DETAIL SHOWING GUARDRAIL WITH SHOULDER BERM GUTTER

–L– STA. 15+37.00 TO –L– STA 15+50.94 LT
–L– STA. 15+37.00 TO –L– STA 15+50.94 RT

6/2/99
2/23/2016
17BP.5.R.48_20045_RDY_PSH02.dgn
USER: Rmorris

DocuSign Envelope ID: 28BF53E9-44FA-17TE-B2A2-BEB32F59FC19

$$$$$$SYSTIME$$$$$
$$$$$$$$$$$$$$$$$$DGN$$$$$$$$$$$$$$$$
$$$$USERNAME$$$$

STATE OF NORTH CAROLINA
DEPT. OF TRANSPORTATION
DIVISION OF HIGHWAYS
RALEIGH, N.C.

ENGLISH DETAIL DRAWING FOR
STRUCTURE ANCHOR UNITS
GUARDRAIL ANCHOR UNIT, TYPE III FOR ATTACHMENT TO RAIL ON BRIDGE - SUB REGIONAL TIER

SHEET 2 OF 7
862d03

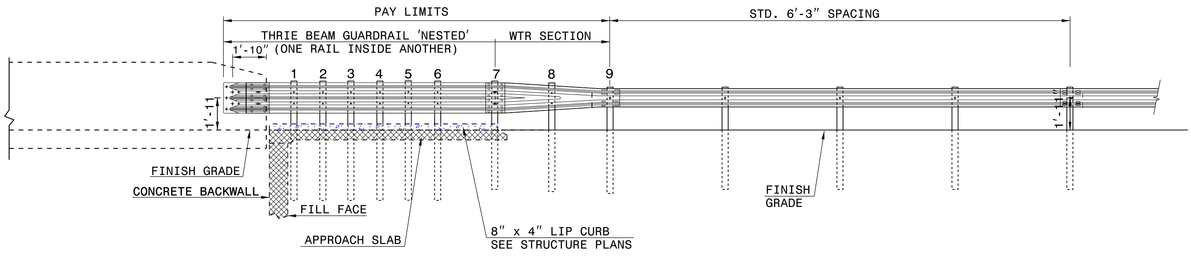

ELEVATION

NOTE:
**POST NOT REQUIRED FOR SKEW ANGLES GREATER THAN 150° OR LESS THAN 30° UNLESS OTHERWISE DIRECTED BY THE ENGINEER.
*THE DISTANCE FROM END OF BRIDGE RAIL TO CENTER LINE OF THE FIRST POST SHOULD BE 11½" IF CONCRETE BACKWALL IS NOT PRESENT.
-SHOULDER BERM GUTTER MUST BE INSTALLED TO THE LIMITS 8" x 4" LIP CURB IS SHOWN IF ANCHOR UNIT IS NOT ADJACENT TO AN APPROACH SLAB.
-MEASURE GUARDRAIL HEIGHT FROM THE TOP OF ADJACENT SURFACE (SHOULDER, BERM, OR GUTTER).
-LAP JOINTS IN THE DIRECTION OF TRAFFIC FLOW.
-SEE SHEET 3 FOR POST SECTIONS 1 THRU 9.

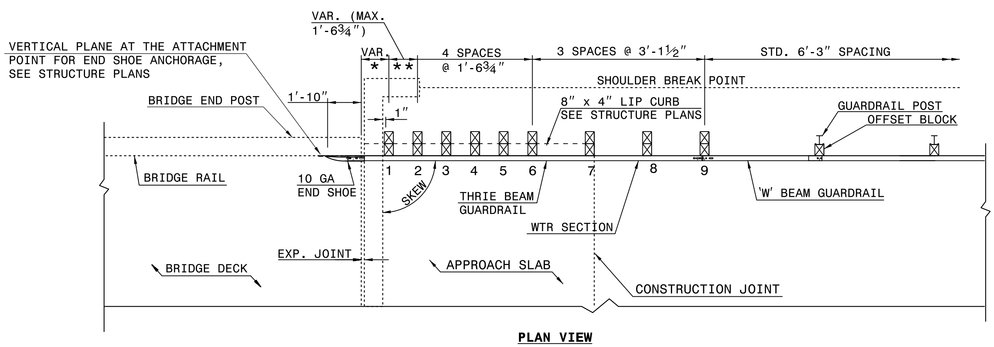

PLAN VIEW

GUARDRAIL ANCHOR UNIT, TYPE III FOR ATTACHMENT TO RAIL ON BRIDGE - SUB REGIONAL TIER

STATE OF NORTH CAROLINA
DEPT. OF TRANSPORTATION
DIVISION OF HIGHWAYS
RALEIGH, N.C.

ENGLISH DETAIL DRAWING FOR
STRUCTURE ANCHOR UNITS
GUARDRAIL ANCHOR UNIT, TYPE III FOR ATTACHMENT TO RAIL ON BRIDGE - SUB REGIONAL TIER

SHEET 2 OF 7
862d03

STATE OF NORTH CAROLINA
DEPT. OF TRANSPORTATION
DIVISION OF HIGHWAYS
RALEIGH, N.C.

ENGLISH DETAIL DRAWING FOR
STRUCTURE ANCHOR UNITS
GUARDRAIL ANCHOR UNIT, TYPE III

SHEET 3 OF 7
862d03

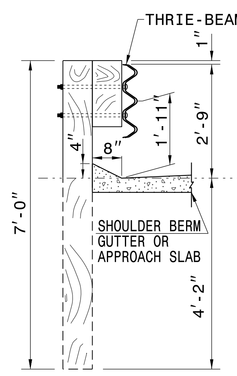

SECTION OF THRIE BEAM POSTS 1 THRU 6

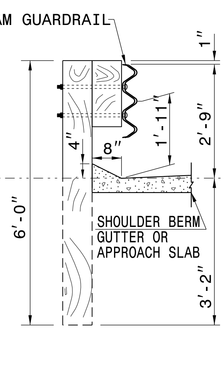

SECTION OF THRIE BEAM POST 7

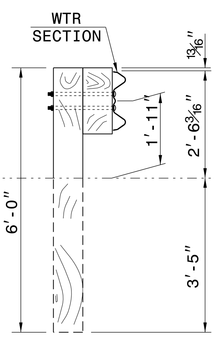

SECTION OF WTR BEAM POST 8

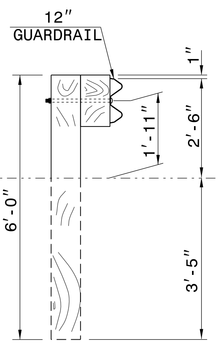

SECTION OF 'W' BEAM POST 9

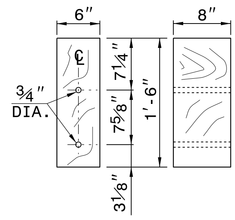

THRIE BEAM OFFSET BLOCK

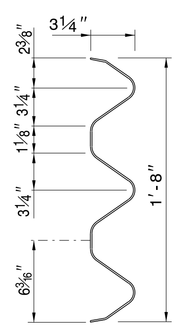

THRIE-BEAM SECTION

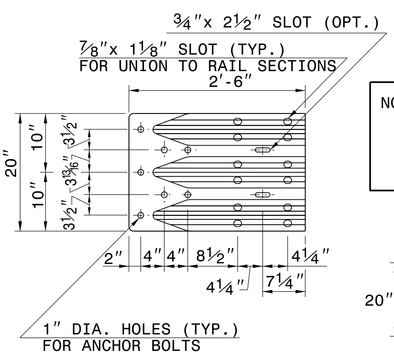

END SHOE

NOTE: THE MID POST AND OFFSET BLOCK OF THE WTR SECTION WILL REQUIRE SPECIAL BOLT HOLE DRILLING IN THE THRIE BEAM OFFSET BLOCK AND LINE POST.

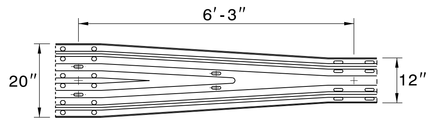

WTR SECTION
ELEVATION VIEW

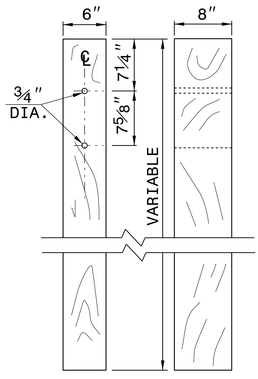

THRIE BEAM LINE POST

STATE OF NORTH CAROLINA
DEPT. OF TRANSPORTATION
DIVISION OF HIGHWAYS
RALEIGH, N.C.

ENGLISH DETAIL DRAWING FOR
STRUCTURE ANCHOR UNITS
GUARDRAIL ANCHOR UNIT, TYPE III

SHEET 3 OF 7
862d03

CONTRACT STANDARDS AND DEVELOPMENT UNIT
Office 919-707-6950 FAX 919-250-4119

DOCUMENT NOT CONSIDERED FINAL UNLESS ALL SIGNATURES COMPLETED

NORTH CAROLINA PROFESSIONAL SEAL 022966 ENGINEER JULIAN S. HOWERTON
DocuSigned by: Julian Howerton
2/24/2016
B7DF3D170DDD49...

SEE TITLE BLOCK

ORIGINAL BY: J. HOWERTON DATE: 06-22-12
MODIFIED BY: DATE:
MODIFIED BY: DATE:
FILE SPEC.:

PROJECT REFERENCE NO. 17BP.5.R.48
SHEET NO. 2C-1

PROJECT REFERENCE NO.	SHEET NO.
17BP.5.R.48	3B-1

DOCUMENT NOT CONSIDERED FINAL UNLESS ALL SIGNATURES COMPLETED

SUMMARY OF EARTHWORK

Station	Station	Uncl. Excav.	Embank. +%	Borrow	Waste
11+50.00	15+61.81 (Beg Bridge)	113	325	212	
16+99.19 (End Bridge)	20+00.00	134	254	120	
Project Total:		247	576	332	
5% for Borrow Pit				17	
GRAND TOTALS:		247	576	349	
SAY:		**260**		**365**	

Contingency Undercut = 200 CY
Select Granular Material = 200 CY
Geotextile for Soil Stabilization = 200 SY

APPROXIMATE QUANTITIES ONLY. UNCLASSIFIED EXCAVATION, BORROW EXCAVATION, FINE GRADING, CLEARING AND GRUBBING, AND REMOVAL OF EXISTING PAVEMENT WILL BE PAID FOR AT THE CONTRACT LUMP SUM PRICE FOR "GRADING"

PAVEMENT REMOVAL SUMMARY

IN SQUARE YARDS

SURVEY LINE	Station	Station	LOCATION LT/RT/CL	ASPHALT REMOVAL
-L-	11+50.00	15+72.77	CL	925
-L-	16+92.83	20+00.00	CL	652
		TOTAL:		1577
		SAY:		1580

SHOULDER BERM GUTTER SUMMARY

LINE	Station	Station	LENGTH
-L- (Left)	15+37.00	15+50.81	13.81
-L- (Right)	15+37.00	15+50.81	13.81
		TOTAL:	27.62
		SAY:	30

"N" = DISTANCE FROM EDGE OF LANE TO FACE OF GUARDRAIL
TOTAL SHOULDER WIDTH = DISTANCE FROM EDGE OF TRAVEL LANE TO SHOULDER BREAK POINT.
FLARE LENGTH = DISTANCE FROM LAST SECTION OF PARALLEL GUARDRAIL TO END OF GUARDRAIL
W = TOTAL WIDTH OF FLARE FROM BEGINNING OF TAPER TO END OF GUARDRAIL

GUARDRAIL SUMMARY

G = GATING IMPACT ATTENUATOR TYPE 350
NG = NON-GATING IMPACT ATTENUATOR TYPE 350

SURVEY LINE	BEG. STA.	END STA.	LOCATION	LENGTH			WARRANT POINT		"N" DIST. FROM E.O.L.	TOTAL SHOUL WIDTH	FLARE LENGTH		W		ANCHORS									IMPACT ATTENUATOR TYPE 350		SINGLE FACED CONCRETE BARRIER	REMOVE EXISTING GUARDRAIL	REMOVE & STOCKPILE EXISTING GUARDRAIL	REMARKS
				STRAIGHT	SHOP CURVED	DOUBLE FACED	APPROACH END	TRAILING END			APPROACH END	TRAILING END	APPROACH END	TRAILING END	XI MOD	XI	GRAU 350	M-350	XIII	CAT-1	VI MOD	BIC	TYPE III	G	NG				
-L-	14+86.81	15+61.81	RT	75			15+63.00		5'-5"	8'-5"	50'		1				1						1				140'		
-L-	14+86.81	15+61.81	LT	75				15+63.00	5'-5"	8'-5"		50'		1			1						1				140'		
-L-	16+99.19	17+74.19	RT	75				16+98.00	5'-5"	8'-5"		50'		1			1						1				65'		
-L-	16+99.19	17+74.19	LT	75			16+98.00		5'-5"	8'-5"	50'		1				1						1				140'		
		SUBTOTALS		300													4						4						
		DEDUCITONS FOR ANCHOR UNITS																											
		GRAU-350 TL-3	4 @ 50'	-200																									
		TYPE III	4 @ 18.75'	-75																									
		PROJECT TOTALS		25																									
	ADDITIONAL GUARDRAIL POSTS = 5 EA																												

REVISIONS

8/17/99

2/23/2006
12:50:00
USER: bwiles
17BP.5.R.48_RDY_sum_03B-1.dgn

COMPUTED BY: BTB DATE: 1/14/2015

CHECKED BY: ECOLOGICAL ENG., LLP DATE: 1/14/2015

NORTH CAROLINA DEPARTMENT OF TRANSPORTATION
DIVISION OF HIGHWAYS

PROJECT REFERENCE NO.	SHEET NO.
17BP.5.R.48	3D-1

DOCUMENT NOT CONSIDERED FINAL UNLESS ALL SIGNATURES COMPLETED

Note: Invert Elevations indicated are for Bid Purposes only and shall not be used for project construction stakeout. See "Standard Specifications For Roads and Structures, Section 300-5".

LIST OF PIPES, ENDWALLS, ETC. (FOR PIPES 48 INCHES & UNDER)

STATION	LOCATION (LT, RT, OR CL)'	STRUCTURE NO. FROM	STRUCTURE NO. TO	TOP ELEVATION	INVERT ELEVATION	INVERT ELEVATION	SLOPE CRITICAL	DRAINAGE PIPE (RCP, CSP, CAAP, HDPE, or PVC) SIZE 12"	15"	18"	24"	30"	36"	42"	48"	DO NOT USE RCP	DO NOT USE CSP	DO NOT USE CAAP	DO NOT USE HDPE
THICKNESS OR GAUGE																			
15+42 -L-	LT	0401		443.93	441.18														
		0401	OUT		441.18	437.50			16							x		x	x
15+42 -L-	RT	0402		443.93	441.18														
		0402	OUT		441.18	436.10			19							x		x	x
18+16 -L-	RT																		
19+72 -L-	RT																		
SHEET TOTALS									35										

STATION	C.S. PIPE SIZE 12"	15"	18"	24"	30"	36"	42"	48"	R.C. PIPE CLASS III SIZE 12"	15"	18"	24"	30"	36"	42"	48"	R.C. PIPE CLASS IV SIZE 12"	15"	18"	24"	30"	36"	42"	48"
THICKNESS OR GAUGE	.064	.064	.064	.064	.079	.079	.109	.109																
15+42 -L-																								
15+42 -L-																								
18+16 -L-																								
19+72 -L-																								
SHEET TOTALS																								

STATION	* " R.C. PIPE (CLASS V)	**** RC PIPE CULVERTS, CONTRACTOR DESIGN	***** RC PIPE CULVERTS, CONTRACTOR DESIGN	15" SIDE DRAIN PIPE	18" SIDE DRAIN PIPE	ENDWALLS STD. 838.01 838.11 OR STD. 838.80 (UNLESS NOTED OTHERWISE) CU. YARDS R.C.P.	C.S.P.	QUANTITIES FOR DRAINAGE STRUCTURES PER EACH (0' THRU 5.0')	LIN. FT. 5.0' THRU 10.0' A	10.0' AND ABOVE B	*TOTAL L.F. FOR PAY QUANTITY SHALL BE COL. 'A' + (1.3 X COL. 'B')	C.B. STD. 840.01 OR STD. 840.02	FRAME, GRATES, AND HOOD STANDARD 840.03 TYPE OF GRATE E	F	G	CONCRETE TRANSITIONAL SECTION DROP INLET	CATCH BASIN	D.I. STD. 840.14 OR STD. 840.15	D.I. FRAME WITH TWO GRATES STD. 840.16	G.D.I. TYPE "A" STD. 840.17 OR 840.26	G.D.I. TYPE "B" STD. 840.18 OR 840.27	G.D.I. TYPE "D" STD. 840.19 OR 840.28	G.D.I. FRAME WITH GRATE STD. 840.20	G.D.I. FRAME WITH TWO GRATES STD. 840.22	G.D.I. (N.S.) FRAME WITH GRATE STD. 840.24	G.D.I. (N.S.) FRAME WITH TWO GRATES STD. 840.24	J.B. STD. 840.31 OR 840.32	G.D.I. FRAME (N.S. FLAT) W/2 GRATES STD. 840.29	T.B.D.I. STD. 840.35	15" DRAINAGE PIPE ELBOW	SIDE DRAIN PIPE ELBOWS NO. & SIZE	CONC. & BRICK PIPE PLUG, C.Y. STD. 840.71	CONC. COLLARS CL. "B" C.Y. STD. 840.72	PIPE REMOVAL LIN. FT.	REMARKS
15+42 -L-								1																		1	1									
																												2								
15+42 -L-								1																		1	1									
																												2								
18+16 -L-				30																																
19+72 -L-				25																																
SHEET TOTALS				55				2																		2	2	4								

ABBREVIATIONS

C.B.	CATCH BASIN
N.D.I.	NARROW DROP INLET
D.I.	DROP INLET
G.D.I.	GRATED DROP INLET
G.D.I.(N.S.)	(NARROW SLOT)
J.B.	JUNCTION BOX
M.H.	MANHOLE
T.B.D.I.	TRAFFIC BEARING DROP INLET
T.B.J.B.	TRAFFIC BEARING JUNCTION BOX

REVISIONS

8/17/99

2/23/2016
12:30:12
ISE\Bmbrues
R:\Roadway\20045_RDY_sum_03D-1.dgn

DocuSign Envelope ID: 28BF53E9-44FA-477E-B2A2-BEB32F59FC19

PROJECT REFERENCE NO.	SHEET NO.
17BP.5.R.48	4
R/W SHEET NO.	

ROADWAY DESIGN ENGINEER
NORTH CAROLINA PROFESSIONAL SEAL 034407 ENGINEER ANDREW P. YOUNG
DocuSigned by: Andrew P. Young 2/24/2016
STEWART
Firm License No. C-1051 421 Fayetteville St. Suite 400 Raleigh, NC 27601 T 919.380.8750 www.stewartinc.com

HYDRAULICS ENGINEER
NORTH CAROLINA PROFESSIONAL SEAL 039102 ENGINEER BRANDON T. BARHAM
DocuSigned by: Brandon Barham 2/24/2016
ECOLOGICAL ENGINEERING
NC FIRM LICENSE No: F-1148 1151 SE Cary Parkway, Suite 101 Cary, NC 27511 (919) 557-9929

DOCUMENT NOT CONSIDERED FINAL UNLESS ALL SIGNATURES COMPLETED

-L- CURVE DATA	
PI Sta 21+00.34 Δ = 4° 06' 55.0" (RT) D = 3° 14' 44.5" L = 126.79' T = 63.42' R = 1,765.28'	PI Sta 22+01.84 Δ = 3° 59' 15.6" (RT) D = 5° 13' 50.9" L = 76.23' T = 38.13' R = 1,095.36'

DETAIL 3
BANK STABILIZATION
(Not to Scale)

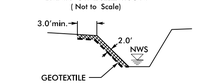

Type of Liner= CLASS II RIPRAP
STA 15+89 L

DETAIL 1
SPECIAL LATERAL 'V' DITCH
(Not to Scale)

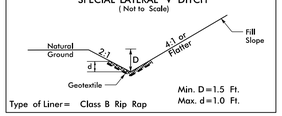

Type of Liner= Class B Rip Rap
Min. D=1.5 Ft.
Max. d=1.0 Ft.
FROM STA 17+90 TO STA 19+60 L RT

NAD 83 NSRS 2011

BEGIN STATE PROJECT 17BP.5.R.48
-L- STA.11+50.00

END STATE PROJECT 17BP.5.R.48
-L- STA.20+00.00

-L- POT Sta. 10+00.00

PC Sta. 20+36.92

PCC Sta. 21+63.71

PT Sta. 22+39.94

REMOVE END BENTS/CONCRETE FOOTERS, PLACE BANK STABILIZATION w/CLASS II RIP RAP TO AREA SHOWN ON STREAM BANK, SEE DETAIL 3, USE IMPERVIOUS DIKE AND ISOLATE ADJACENT WORK AREA TO REMOVE EXISTING END BENTS/CONCRETE FOOTERS AND INSTALL BANK STABILIZATION IN THE DRY.
EST 120 TONS CLASS II RIP RAP
EST 130 SY GEOTEXTILE
THIS WORK IS COVERED UNDER THE PAY ITEM 'REMOVAL OF EXISTING STRUCTURE'.

CLASS B RIP RAP
EST 1 TON
EST 5 SY
GEOTEXTILE

15" W/ ELBOWS

CLASS B RIP RAP
EST 1 TON
EST 5 SY GEOTEXTILE

CLASS B RIP RAP
EST 3 TON
EST 10 SY GEOTEXTILE

SPECIAL LAT V DITCH
SEE DETAIL 1
CLASS B RIP RAP
EST 83 TON
EST 250 SY GEOTEXTILE

S 53° 59' 22.5" E

S 45° 53' 11.9" E

TB 2GI

REMOVE GAUGE STATION

REMOVE

RETAIN

BL-101 BL-102 BL-103 BM-1 BM-2

CATHERIN H. THOMPSON
DB 308 PG 427

LARRY R. NEWTON AND WIFE SUSAN R. NEWTON
DB 164 PG 169

GERALD L. NORRIS AND WIFE SHELBRA B. NORRIS
DB 206 PG 747

DANNY W. MCPHERSON
DB 334 PG 588

HENRY R. DUNKLEY AND WIFE SUSAN C. DUNKLEY
DB 169 PG 281

GERALD L. NORRIS AND WIFE SHELBRA B. NORRIS
DB 203 PG 260

HENRY R. DUNKLEY AND WIFE SUSAN C. DUNKLEY
DB 243 PG 493

SR 1102 GORDONTON RD
20' BST

TO US 158

TO NC 49

SOUTH MCO CREEK

WOODS

FIELD

GRAU 350 TL-3

TYPE-III

BEGIN APPROACH SLAB
-L- STA.15+50.94

END BRIDGE
-L- STA.16+99.19

BEGIN BRIDGE
-L- STA.15+61.81

END APPROACH SLAB
-L- STA.17+10.07

5'-5"

30'-10" CLEAR

S 53° 59' 22.5" E

DETAIL SHOWING PAVEMENT-BRIDGE RELATIONSHIP (N.T.S.)

FOR PROFILE, SEE SHEET 5

SEE SHEETS S-1 THRU S-20 FOR STRUCTURE PLANS

DESIGN EXCEPTION REQUIRED FOR SAG VERTICAL CURVE K
DESIGN EXCEPTION REQUIRED FOR VERTICAL STOPPING SIGHT DISTANCE

REVISIONS

8/17/99

2/23/2016
17BP.5.R.48_20045_RDY_PSH04.dgn
USER:brbarham

DocuSign Envelope ID: 28BF53E9-44FA-477E-B2A2-BEB32F59FC19

PROJECT REFERENCE NO.	SHEET NO.
17BP.5.R.48	5
R/W SHEET NO.	

ROADWAY DESIGN ENGINEER
NORTH CAROLINA PROFESSIONAL SEAL 034407 ENGINEER ANDREW P. YOUNG
DocuSigned by: Andrew P. Young 2/24/2016

HYDRAULICS ENGINEER
NORTH CAROLINA PROFESSIONAL SEAL 039102 ENGINEER BRANDON T. BARHAM
DocuSigned by: Brandon Barham 2/24/2016

STEWART
Firm License No. C-1051
421 Fayetteville St.
Suite 400
Raleigh, NC 27601
T 919.380.8750
www.stewartinc.com

ECOLOGICAL ENGINEERING
NC FIRM LICENSE No:F-1148
1151 SE Cary Parkway, Suite 101
Cary, NC 27511
(919) 557-9929

DOCUMENT NOT CONSIDERED FINAL UNLESS ALL SIGNATURES COMPLETED

REVISIONS

8/17/99

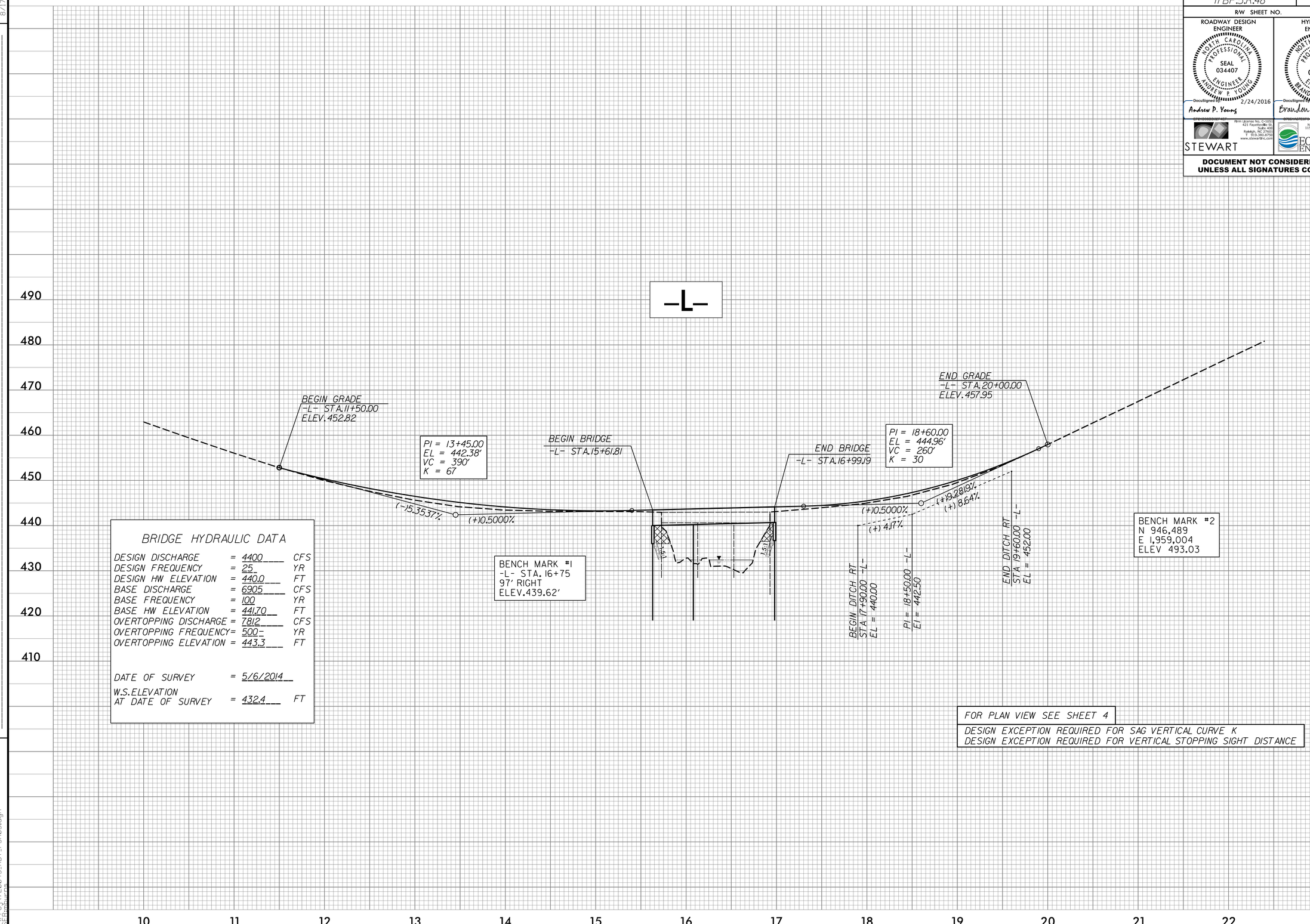

BRIDGE HYDRAULIC DATA

DESIGN DISCHARGE	=	4400	CFS
DESIGN FREQUENCY	=	25	YR
DESIGN HW ELEVATION	=	440.0	FT
BASE DISCHARGE	=	6905	CFS
BASE FREQUENCY	=	100	YR
BASE HW ELEVATION	=	441.70	FT
OVERTOPPING DISCHARGE	=	7812	CFS
OVERTOPPING FREQUENCY	=	500-	YR
OVERTOPPING ELEVATION	=	443.3	FT
DATE OF SURVEY	=	5/6/2014	
W.S.ELEVATION AT DATE OF SURVEY	=	432.4	FT

FOR PLAN VIEW SEE SHEET 4

DESIGN EXCEPTION REQUIRED FOR SAG VERTICAL CURVE K
DESIGN EXCEPTION REQUIRED FOR VERTICAL STOPPING SIGHT DISTANCE

2/23/2016
R:\Roadway\Proj\20045_RDY_PSH05.dgn
USER: ryoung

DocuSign Envelope ID: 7A968CD1-A305-460D-A3C9-444ACBAA9D15

STATE OF NORTH CAROLINA
DIVISION OF HIGHWAYS

TRANSPORTATION MANAGEMENT PLAN

PERSON COUNTY

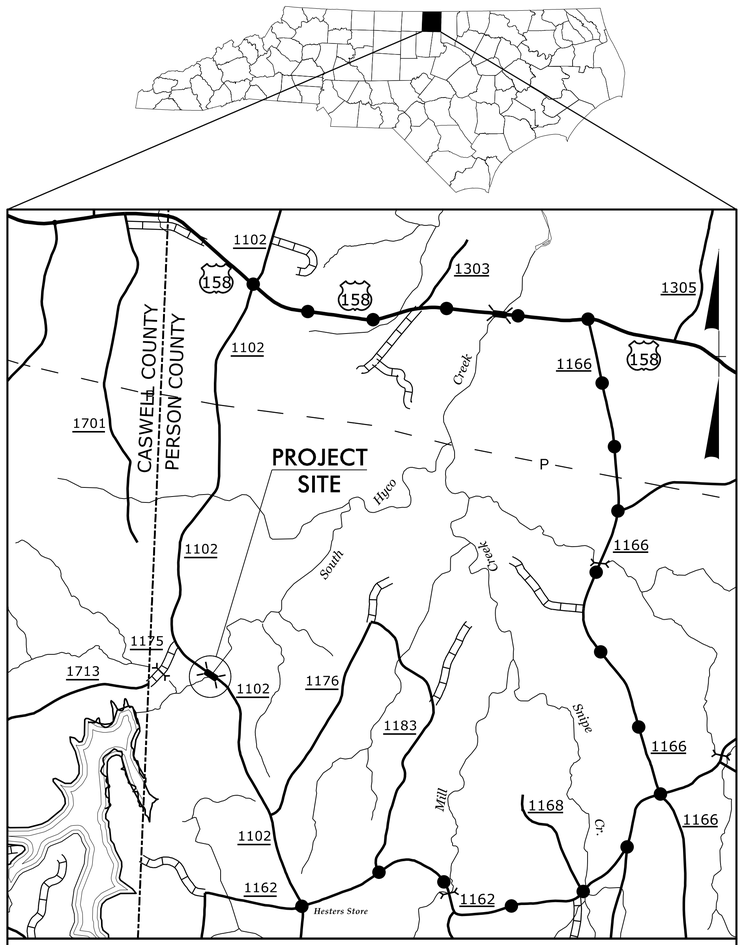

VICINITY MAP FOR 17BP.5.R.48

OFFSITE DETOUR ROUTE

INDEX OF SHEETS

SHEET NO.	TITLE
TMP-1	TITLE SHEET, VICINITY MAP, AND INDEX OF SHEETS
TMP-1A	LIST OF APPLICABLE ROADWAY STANDARD DRAWINGS AND LEGEND
TMP-1B	TRANSPORTATION OPERATIONS PLAN: (GENERAL NOTES, MANAGEMENT STRATEGIES, AND PHASING)
TMP-2	SPECIAL SIGN DESIGN
TMP-3	OFF-SITE DETOUR

SHEET NO.
TMP-1

17BP.5.R.48

TIP PROJECT:

DOCUMENT NOT CONSIDERED FINAL UNLESS ALL SIGNATURES COMPLETED

WORK ZONE SAFETY & MOBILITY
"from the MOUNTAINS to the COAST"

N.C.D.O.T. WORK ZONE TRAFFIC CONTROL
1561 MAIL SERVICE CENTER (MSC) RALEIGH, NC 27699-1561
750 N. GREENFIELD PARKWAY, GARNER, NC 27529 (DELIVERY)
PHONE: (919) 773-2800 FAX: (919) 771-2745

DAVID RUGGLES, PE — TRAFFIC CONTROL PROJECT ENGINEER

MICHAEL BURNS, EI — TRAFFIC CONTROL DESIGN ENGINEER

DIVISION OF HIGHWAYS · STATE OF NORTH CAROLINA · DEPARTMENT OF TRANSPORTATION · WORK ZONE TRAFFIC CONTROL

PLANS PREPARED BY:

STEWART
421 FAYETTEVILLE ST, STE 400
RALEIGH, NC 27601
T 919.380.8750
Firm License #: C-1051
www.stewartinc.com
PROJECT #:811001

APPROVED: DocuSigned by: David Ruggles 046276BDF419420...
DATE: 2/26/2016

SEAL

NORTH CAROLINA PROFESSIONAL SEAL 11725 ENGINEER DAVID R. RUGGLES

1/12/2016
...\TCP\720045_TC_TCP_01.dgn
USER:ayoung

DocuSign Envelope ID: 7A968CD1-A305-460D-A3C9-444ACBAA9D15

PROJ. REFERENCE NO.	SHEET NO.
17BP.5.R.48	TMP-1A

ROADWAY STANDARD DRAWINGS

THE FOLLOWING ROADWAY STANDARDS AS SHOWN IN "ROADWAY STANDARD DRAWINGS" - PROJECT SERVICES UNIT - N.C. DEPARTMENT OF TRANSPORTATION - RALEIGH, N.C., DATED JANUARY 2012 ARE APPLICABLE TO THIS PROJECT AND BY REFERENCE HEREBY ARE CONSIDERED A PART OF THESE PLANS:

STD. NO.	TITLE
1101.01	WORK ZONE ADVANCE WARNING SIGNS
1101.03	TEMPORARY ROAD CLOSURES
1101.11	TRAFFIC CONTROL DESIGN TABLES
1110.01	STATIONARY WORK ZONE SIGNS
1145.01	BARRICADES

LEGEND

GENERAL

- DIRECTION OF TRAFFIC FLOW
- DIRECTION OF PEDESTRIAN TRAFFIC FLOW
- EXIST. PVMT.
- NORTH ARROW
- PROPOSED PVMT.
- TEMP. SHORING (LOCATION PURPOSES ONLY)
- WORK AREA
- REMOVAL

SIGNALS

- EXISTING
- PROPOSED
- TEMPORARY

PAVEMENT MARKINGS

- EXISTING LINES
- TEMPORARY LINES

TRAFFIC CONTROL DEVICES

- BARRICADE (TYPE III)
- CONE
- DRUM
- SKINNY DRUM
- TUBULAR MARKER
- TEMPORARY CRASH CUSHION
- FLASHING ARROW BOARD
- FLAGGER
- LAW ENFORCEMENT
- TRUCK MOUNTED ATTENUATOR (TMA)
- CHANGEABLE MESSAGE SIGN

TEMPORARY SIGNING

- PORTABLE SIGN
- STATIONARY SIGN
- STATIONARY OR PORTABLE SIGN

PAVEMENT MARKERS

- CRYSTAL/CRYSTAL
- CRYSTAL/RED
- YELLOW/YELLOW

PAVEMENT MARKING SYMBOLS

- PAVEMENT MARKING SYMBOLS

STEWART
Firm License No. C-1051
421 Fayetteville St,
Suite 400
Raleigh, NC 27601
T 919.380.8750
www.stewartinc.com

DOCUMENT NOT CONSIDERED FINAL UNLESS ALL SIGNATURES COMPLETED

APPROVED: David Ruggles DATE: 2/26/2016

SEAL

NORTH CAROLINA PROFESSIONAL SEAL 11725 ENGINEER DAVID R. RUGGLES

DIVISION OF HIGHWAYS STATE OF NORTH CAROLINA DEPARTMENT OF TRANSPORTATION WORK ZONE TRAFFIC CONTROL

ROADWAY STANDARD DRAWINGS & LEGEND

2/26/2016
..\TCP\720045_TC_TCP_01A.dgn
USER:default

DocuSign Envelope ID: 7A968CD1-A305-460D-A3C9-444ACBAA9D15

PROJ. REFERENCE NO.	SHEET NO.
17BP.5.R.48	TMP-1B

MANAGEMENT STRATEGIES

DURING CONSTRUCTION OF PROPOSED STRUCTURE BRIDGE No. 45 OVER SOUTH HYCO CREEK, SR 1102 (GORDONTON ROAD) WILL BE CLOSED TO THROUGH TRAFFIC. LOCAL TRAFFIC ON GORDONTON ROAD WILL BE MAINTAINED USING AN OFFSITE DETOUR.

ACCESS TO ALL RESIDENCES AND BUSINESSES WITHIN THE PROJECT LIMITS MUST BE MAINTAINED AT ALL TIMES.

PHASING

STEP 1:

USING RSD 1101.03, SHEET 1 OF 9, SHEETS TMP-2 AND TMP-3, INSTALL DETOUR SIGNS, PLACE TYPE III BARRICADES TO CLOSE SR 1102 (GORDONTON ROAD) TO THROUGH TRAFFIC, AND DETOUR TRAFFIC OFFSITE.

STEP 2:

AWAY FROM TRAFFIC, COMPLETE THE FOLLOWING:
(SEE ROADWAY AND STRUCTURE PLANS).

1) REMOVE EXISTING STRUCTURE No. 45 AND CONSTRUCT THE PROPOSED STRUCTURE FROM -L- STA. 15+61.81 TO -L- STA 16+99.19.

2) CONSTRUCT THE PROPOSED ROADWAY UP TO AND INCLUDING THE FINAL LAYER OF SURFACE COURSE FROM -L- STA. 11+50.00 TO -L- STA. 15+61.81 AND -L- STA 16+99.19 TO -L- STA 20+00.00.

3) USING THE FINAL PAVEMENT MARKING PLAN, PLACE FINAL PAVEMENT MARKINGS AND MARKERS, FROM -L- STA. 11+50.00 TO -L- STA. 20+00.00 AND TIE TO EXISTING PAVEMENT MARKINGS.

STEP 3:
OPEN ROADWAY TO TRAFFIC AND REMOVE ALL WORK ZONE SIGNAGE.

GENERAL NOTES

CHANGES MAY BE REQUIRED WHEN PHYSICAL DIMENSIONS IN THE DETAIL DRAWINGS, STANDARD DETAILS, AND ROADWAY DETAILS ARE NOT ATTAINABLE TO MEET FIELD CONDITIONS OR RESULT IN DUPLICATE OR UNDESIRED OVERLAPPING OF DEVICES. MODIFICATION MAY INCLUDE: MOVING, SUPPLEMENTING, COVERING, OR REMOVAL OF DEVICES AS DIRECTED BY THE ENGINEER.

THE FOLLOWING GENERAL NOTES APPLY AT ALL TIMES FOR THE DURATION OF THE CONSTRUCTION PROJECT EXCEPT WHEN OTHERWISE NOTED IN THE PLAN OR DIRECTED BY THE ENGINEER.

LANE AND SHOULDER CLOSURE REQUIREMENTS

A) WHEN PERSONNEL AND/OR EQUIPMENT ARE WORKING WITHIN 15 FT OF AN OPEN TRAVEL LANE, CLOSE THE NEAREST OPEN SHOULDER USING ROADWAY STANDARD DRAWING NO. 1101.04 UNLESS THE WORK AREA IS PROTECTED BY BARRIER OR GUARDRAIL OR A LANE CLOSURE IS INSTALLED.

B) WHEN PERSONNEL AND/OR EQUIPMENT ARE WORKING ON THE SHOULDER ADJACENT TO AN UNDIVIDED FACILITY AND WITHIN 5 FT OF AN OPEN TRAVEL LANE, CLOSE THE NEAREST OPEN TRAVEL LANE USING ROADWAY STANDARD DRAWING NO. 1101.02 UNLESS THE WORK AREA IS PROTECTED BY BARRIER OR GUARDRAIL.

C) WHEN PERSONNEL AND/OR EQUIPMENT ARE WORKING WITHIN A LANE OF TRAVEL OF AN UNDIVIDED OR DIVIDED FACILITY, CLOSE THE LANE ACCORDING TO THE TRAFFIC CONTROL PLANS, ROADWAY STANDARD DRAWINGS, OR AS DIRECTED BY THE ENGINEER. CONDUCT THE WORK SO THAT ALL PERSONNEL AND/OR EQUIPMENT REMAIN WITHIN THE CLOSED TRAVEL LANE.

PAVEMENT EDGE DROP OFF REQUIREMENTS

D) BACKFILL AT A 6:1 SLOPE UP TO THE EDGE AND ELEVATION OF EXISTING PAVEMENT IN AREAS ADJACENT TO AN OPENED TRAVEL LANE THAT HAS AN EDGE OF PAVEMENT DROP-OFF AS FOLLOWS:

BACKFILL DROP-OFFS THAT EXCEED 2 INCHES ON ROADWAYS WITH POSTED SPEED LIMITS OF 45 MPH OR GREATER.

BACKFILL DROP-OFFS THAT EXCEED 3 INCHES ON ROADWAYS WITH POSTED SPEED LIMITS LESS THAN 45 MPH.

BACKFILL WITH SUITABLE COMPACTED MATERIAL, AS APPROVED BY THE ENGINEER, AT NO EXPENSE TO THE DEPARTMENT.

TRAFFIC PATTERN ALTERATIONS

E) NOTIFY THE ENGINEER THIRTY (30) CALENDAR DAYS PRIOR TO ANY TRAFFIC PATTERN ALTERATION.

SIGNING

F) INSTALL ADVANCE WORK ZONE WARNING SIGNS WHEN WORK IS WITHIN 40 FT FROM THE EDGE OF TRAVEL LANE AND NO MORE THAN THREE (3) DAYS PRIOR TO THE BEGINNING OF CONSTRUCTION.

G) PROVIDE SIGNING AND DEVICES REQUIRED TO CLOSE THE ROAD ACCORDING TO THE ROADWAY STANDARD DRAWINGS AND TRAFFIC CONTROL PLANS.

PROVIDE SIGNING REQUIRED FOR THE OFF-SITE DETOUR ROUTE AS SHOWN IN THE TRAFFIC CONTROL PLANS.

H) COVER OR REMOVE ALL SIGNS AND DEVICES REQUIRED TO CLOSE THE ROAD WHEN ROAD CLOSURE IS NOT IN OPERATION.

COVER OR REMOVE ALL SIGNS REQUIRED FOR THE OFF-SITE DETOUR WHEN THE DETOUR IS NOT IN OPERATION.

I) ENSURE ALL NECESSARY SIGNING IS IN PLACE PRIOR TO ALTERING ANY TRAFFIC PATTERN.

TRAFFIC CONTROL DEVICES

J) PLACE TYPE III BARRICADES, WITH "ROAD CLOSED" SIGN R11-2 ATTACHED, OF SUFFICIENT LENGTH TO CLOSE ENTIRE ROADWAY.

PAVEMENT MARKINGS AND MARKERS

K) TIE PROPOSED PAVEMENT MARKING LINES TO EXISTING PAVEMENT MARKING LINES.

STEWART
Firm License No. C-1051
421 Fayetteville St,
Suite 400
Raleigh, NC 27601
T 919.380.8750
www.stewartinc.com

DOCUMENT NOT CONSIDERED FINAL UNLESS ALL SIGNATURES COMPLETED

APPROVED David Ruggles DATE: 2/26/2016

SEAL

NORTH CAROLINA PROFESSIONAL SEAL 117725 ENGINEER DAVID R. RUGGLES

DIVISION OF HIGHWAYS STATE OF NORTH CAROLINA DEPARTMENT OF TRANSPORTATION WORK ZONE TRAFFIC CONTROL

TRANSPORTATION OPERATIONS PLAN

1/12/2016
:::TCP\T20045_TC_TCP_01B.dgn
USER:oyoung

DocuSign Envelope ID: 7A968CD1-A305-460D-A3C9-444ACBAA9D15

PROJ. REFERENCE NO.	SHEET NO.
17BP.5.R.48	TMP-2

SIGN NUMBER: GORDONTON RD
TYPE: STATIONARY
QUANTITY: SEE PLANS

BACKG COLOR: Fluorescent Orange
COPY COLOR: Black

SYMBOL	X	Y	WID	HT

SIGN WIDTH: 3′-0″
HEIGHT: 2′-0″
TOTAL AREA: 6.0 Sq.Ft.

BORDER TYPE: INSET
RECESS: 0.38″
WIDTH: 0.63″
RADII: 1.5″

NO. Z BARS:
LENGTH:

MAT′L: 0.080″ (2.0 mm) ALUMINUM

DESIGN BY: MSB
CHECKED BY: DRR
DATE: Jan 28, 2015
PROJECT ID: 17BP.5.R.48
DIV: 5

USE NOTES: 1,2

1. Legend and border shall be direct applied black non-reflective sheeting.
2. Background shall be NC GRADE B fluoresent orange retroreflective sheeting.

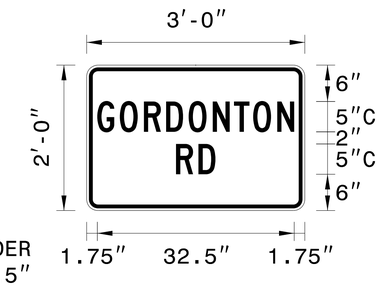

BORDER
R=1.5″
TH=0.63″
IN=0.38″

Panel Style: Traffic Control.ssi
M.U.T.C.D.: 2009 Edition

Spacing Factor is 1 unless specified otherwise

LETTER POSITIONS

Letter locations are panel edge to lower left corner

																											Series/Size Text Length
	G	O	R	D	O	N	T	O	N																		C 2000
	1.8	5.5	9.4	13.1	16.8	20.8	24.3	27.5	31.5																		32.5
	R	D																									C 2000
	14.8	18.5																									6.5

FILENAME: 720045_TC_TCP_02

NORTH CAROLINA D.O.T. SIGN DETAIL

DOCUMENT NOT CONSIDERED FINAL UNLESS ALL SIGNATURES COMPLETED

APPROVED David Ruggles DATE: 2/26/2016

SEAL

NORTH CAROLINA PROFESSIONAL SEAL 11725 ENGINEER DAVID R. RUGGLES

DIVISION OF HIGHWAYS STATE OF NORTH CAROLINA DEPARTMENT OF TRANSPORTATION WORK ZONE TRAFFIC CONTROL

STEWART
Firm License No. C-1051
421 Fayetteville St.
Suite 400
Raleigh, NC 27601
T 919.380.8750
www.stewartinc.com

SPECIAL SIGN DESIGN

1/12/2016
...\TCP\720045_TC_TCP_02.dgn
USER:ayoung

DocuSign Envelope ID: 7A968CD1-A305-460D-A3C9-444ACBAA9D15

PROJ. REFERENCE NO.	SHEET NO.
17BP.5.R.48	TMP-3

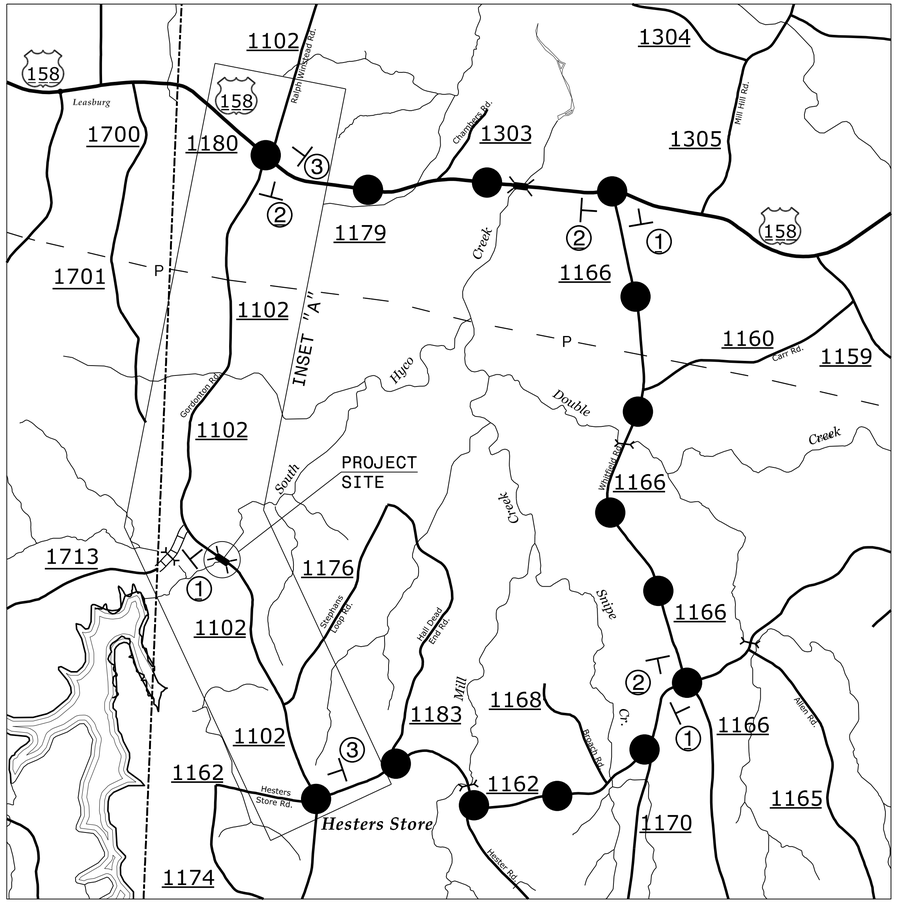

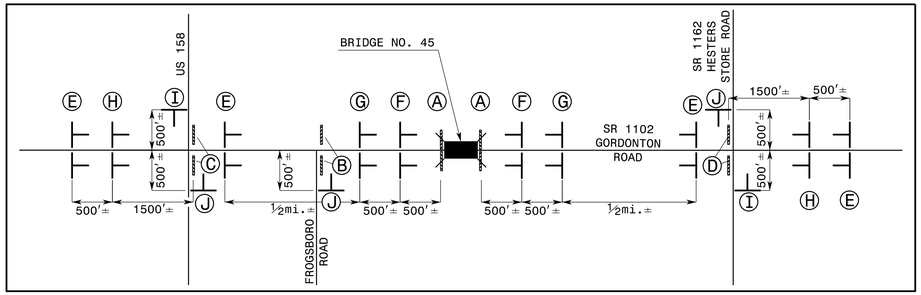

INSET "A"

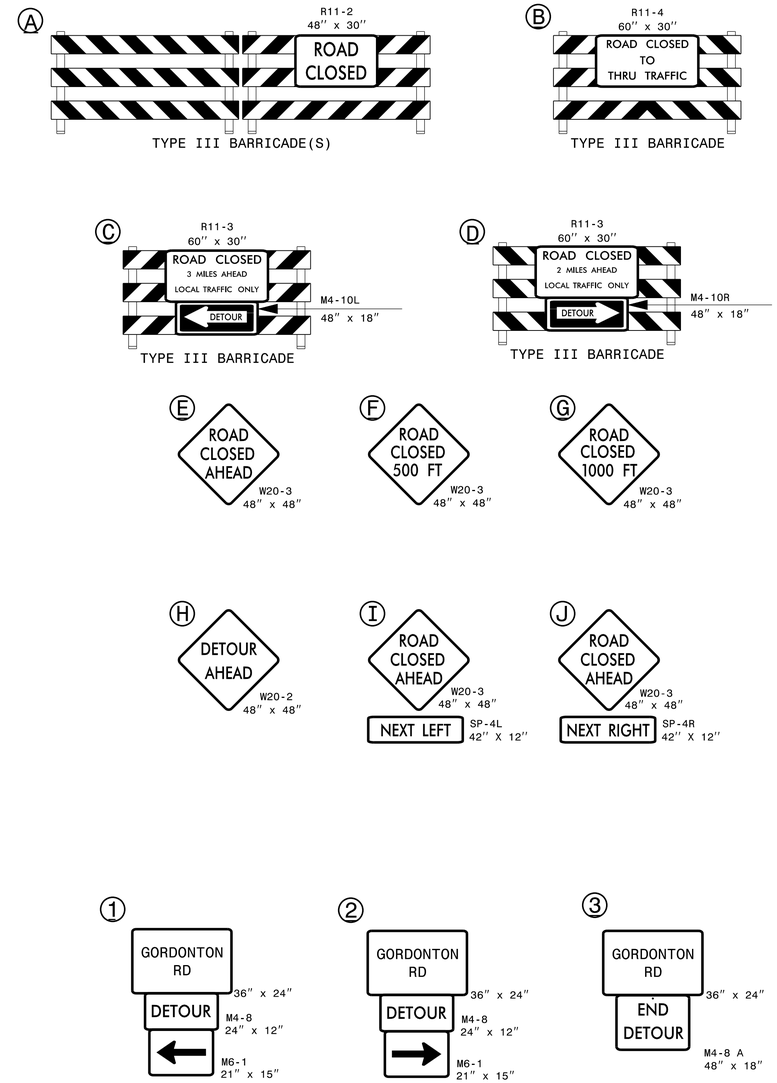

REFER TO ROADWAY STANDARD DRAWING 1101.03, SHEET 1 OF 9 FOR APPLICABLE NOTES.

DOCUMENT NOT CONSIDERED FINAL UNLESS ALL SIGNATURES COMPLETED

APPROVED: David Ruggles (Docusigned by: 2A2E7C0DB7F4442...) DATE: 2/26/2016

SEAL

NORTH CAROLINA PROFESSIONAL SEAL 11725 ENGINEER DAVID B. RUGGLES

DIVISION OF HIGHWAYS STATE OF NORTH CAROLINA DEPARTMENT OF TRANSPORTATION WORK ZONE TRAFFIC CONTROL

Firm License No. C-1051
421 Fayetteville St,
Suite 400
Raleigh, NC 27601
T 919.380.8750
www.stewartinc.com
STEWART

OFF-SITE DETOUR

1/18/2016
...\TCP\720045_TC_TCP_03.dgn
USER:ayoung

DocuSign Envelope ID: 7A968CD1-A305-460D-A3C9-444ACBAA9D15

T.I.P.: 17BP.5.R.48

CONTRACT:

TIP NO.	SHEET NO.
17BP.5.R.48	PMP-1

APPROVED: DocuSigned by: David Ruggles C462768DF412422...

DATE: 2/26/2016

SEAL: NORTH CAROLINA PROFESSIONAL SEAL 11725 ENGINEER DAVID R. RUGGLES

DOCUMENT NOT CONSIDERED FINAL UNLESS ALL SIGNATURES COMPLETED

STATE OF NORTH CAROLINA
DEPARTMENT OF TRANSPORTATION

PAVEMENT MARKING PLAN
PERSON COUNTY

LOCATION: BRIDGE NO. 45 OVER SOUTH HYCO CREEK ON SR 1102 (GORDONTON ROAD)

ROADWAY STANDARD DRAWING

THE FOLLOWING ROADWAY STANDARDS AS APPEAR IN "ROADWAY STANDARD DRAWINGS" - PROJECT SERVICES UNIT - N.C. DEPARTMENT OF TRANSPORTATION - RALEIGH, N.C., DATED JANUARY 2012 ARE APPLICABLE TO THIS PROJECT AND BY REFERENCE HEREBY ARE CONSIDERED A PART OF THESE PLANS:

STD. NO.	TITLE
1205.01	PAVEMENT MARKINGS - LINE TYPES AND OFFSETS
1205.02	PAVEMENT MARKINGS - TWO-LANE AND MULTILANE ROADWAYS
1205.04	PAVEMENT MARKINGS - INTERSECTIONS
1205.12	PAVEMENT MARKINGS - BRIDGES
1250.01	RAISED PAVEMENT MARKERS - INSTALLATION SPACING
1251.01	RAISED PAVEMENT MARKERS - PERMANENT AND TEMPORARY
1261.01	GUARDRAIL AND BARRIER DELINEATORS - INSTALLATION SPACING
1261.02	GUARDRAIL AND BARRIER DELINEATORS - TYPES AND MOUNTING
1262.01	GUARDRAIL END DELINEATION

PAVEMENT MARKING SCHEDULE

SYMBOL	DESCRIPTION
PA	PAINT WHITE EDGELINE (4") (2X)
PI	PAINT YELLOW DOUBLE CENTER (4") (2X)
MA	PERMANENT RAISED PAVEMENT MARKERS YELLOW AND YELLOW

GENERAL NOTES

THE FOLLOWING GENERAL NOTES APPLY AT ALL TIMES FOR THE DURATION OF THE CONSTRUCTION PROJECT, EXCEPT WHEN OTHERWISE NOTED IN THE PLAN, OR DIRECTED BY THE ENGINEER.

A) INSTALL PAVEMENT MARKINGS AND PAVEMENT MARKERS ON THE FINAL SURFACE AS FOLLOWS:

ROAD NAME	MARKING	MARKER
GORDONTON RD	PAINT	RAISED
BRIDGE	PAINT	RAISED

B) TIE PROPOSED PAVEMENT MARKING LINES TO EXISTING PAVEMENT MARKING LINES.

C) REMOVE/REPLACE ANY CONFLICTING/DAMAGED PAVEMENT MARKINGS.

D) PASSING ZONES WILL BE DETERMINED IN THE FIELD AND MUST BE APPROVED BY THE ENGINEER.

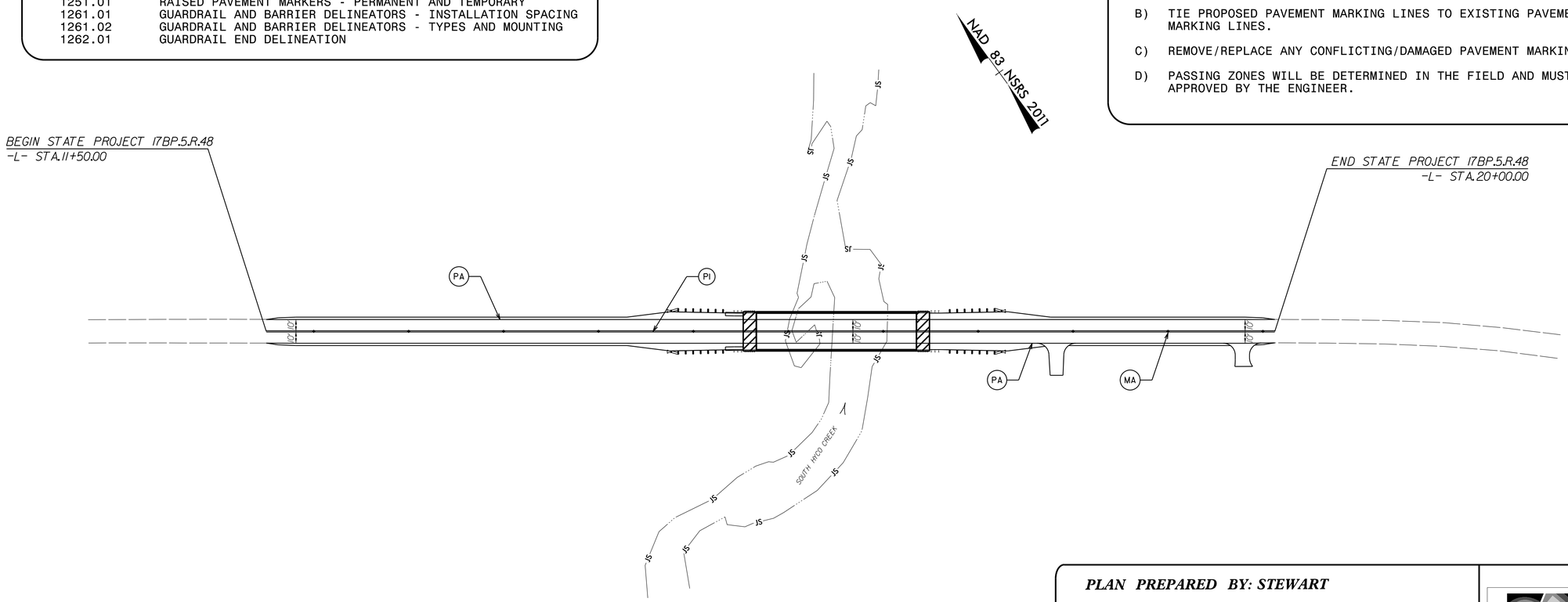

PLAN PREPARED BY: STEWART

DAVID RUGGLES, PE	PROJECT ENGINEER
MICHAEL BURNS, EI	PROJECT DESIGN ENGINEER

STEWART
Firm License No. C-1051
421 Fayetteville St.
Suite 400
Raleigh, NC 27601
T 919.380.8750
www.stewartinc.com

1/12/2016
...\TCP\720045_TC_PMP_01.dgn
USER:ayoung

TIP PROJECT: 17BP.5.R.48

STATE	STATE PROJECT REFERENCE NO.	SHEET NO.	TOTAL SHEETS
N.C.	17BP.5.R.48	EC-1	

STATE PROJ. NO.	F.A. PROJ. NO.	DESCRIPTION
17.BP.5.R.48	N/A	PE

STATE OF NORTH CAROLINA
DIVISION OF HIGHWAYS

PLAN FOR PROPOSED
HIGHWAY EROSION CONTROL

LOCATION: ***BRIDGE NO. 045 OVER SOUTH HYCO CREEK ON SR 1102 (GORDONTON RD.)***

TYPE OF WORK: ***GRADING, PAVING, DRAINAGE, AND STRUCTURE***

BRANDON BARHAM
LEVEL III NAME

3368
LEVEL III CERTIFICATION NO.

HIGH QUALITY WATER(S) EXIST ON THIS PROJECT

High Quality Water Zone(s) Exist
From Sta. 15+65 –L–
to Sta. 17+00 –L–
Refer To E. C. Special Provisions for Special Considerations.

THIS PROJECT CONTAINS EROSION CONTROL PLANS FOR CLEARING AND GRUBBING PHASE OF CONSTRUCTION.

THIS PROJECT HAS BEEN DESIGNED TO SENSITIVE WATERSHED STANDARDS.

ENVIRONMENTALLY SENSITIVE AREA(S) EXIST ON THIS PROJECT

Refer To E. C. Special Provisions for Special Considerations.

EROSION AND SEDIMENT CONTROL MEASURES

Std. #	Description	Symbol
1630.03	Temporary Silt Ditch	TSD
1630.05	Temporary Diversion	TD
1605.01	Temporary Silt Fence	
1606.01	Special Sediment Control Fence	
1622.01	Temporary Berms and Slope Drains	
1630.02	Silt Basin Type B	
1633.01	Temporary Rock Silt Check Type-A	
	Temporary Rock Silt Check Type-A with Matting and Polyacrylamide (PAM)	
1633.02	Temporary Rock Silt Check Type-B	
	Wattle / Coir Fiber Wattle	WW CFW
	Wattle / Coir Fiber Wattle with Polyacrylamide (PAM)	
1634.01	Temporary Rock Sediment Dam Type-A	
1634.02	Temporary Rock Sediment Dam Type-B	
1635.01	Rock Pipe Inlet Sediment Trap Type-A	
1635.02	Rock Pipe Inlet Sediment Trap Type-B	
1630.04	Stilling Basin	
1630.06	Special Stilling Basin	
	Rock Inlet Sediment Trap:	
1632.01	Type A	A
1632.02	Type B	B
1632.03	Type C	C
	Skimmer Basin	
	Tiered Skimmer Basin	
	Infiltration Basin	

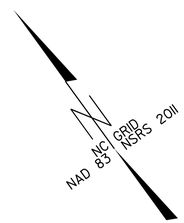

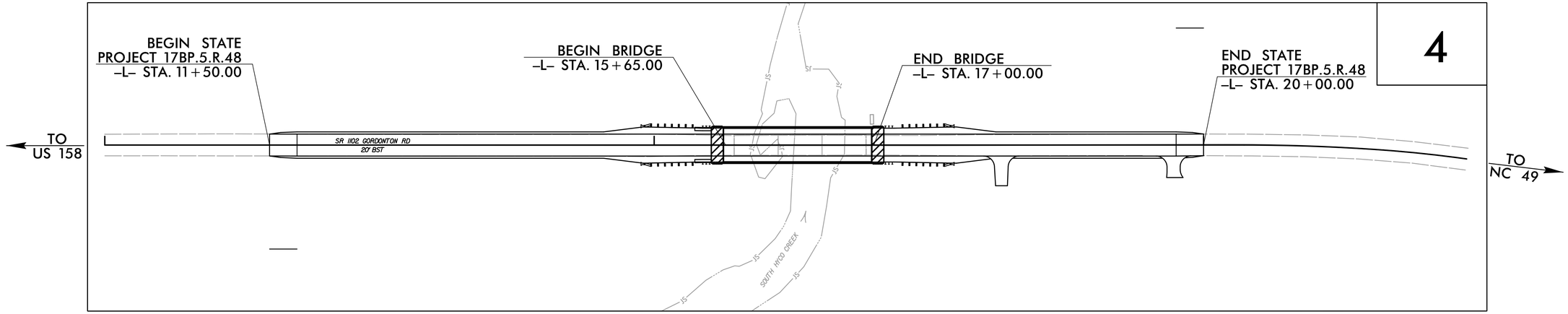

GRAPHIC SCALE

50 0 100
PLANS

50 0 100
PROFILE (HORIZONTAL)

10 0 20
PROFILE (VERTICAL)

Prepared in accordance with standards set by:

ROADSIDE ENVIRONMENTAL UNIT
DIVISION OF HIGHWAYS
STATE OF NORTH CAROLINA

THESE EROSION AND SEDIMENT CONTROL PLANS COMPLY WITH THE REGULATIONS SET FORTH BY THE NCG-010000 GENERAL CONSTRUCTION PERMIT EFFECTIVE AUGUST 3, 2011 ISSUED BY THE NORTH CAROLINA DEPARTMENT OF ENVIRONMENT AND NATURAL RESOURCES DIVISION OF WATER QUALITY.

Prepared In the Office of:

ECOLOGICAL ENGINEERING
NC FIRM LICENSE No: F-1148
1151 SE Cary Parkway
Suite 101
Cary, NC 27518
(919) 557-0929

2012 STANDARD SPECIFICATIONS

Roadway Standard Drawings

The following roadway english standards as appear in "Roadway Standard Drawings"– Roadway Design Unit – N. C. Department of Transportation – Raleigh, N. C., dated January 2012 and the latest revison thereto are applicable to this project and by reference hereby are considered a part of these plans.

1604.01	Railroad Erosion Control Detail	1632.01	Rock Inlet Sediment Trap Type A
1605.01	Temporary Silt Fence	1632.02	Rock Inlet Sediment Trap Type B
1606.01	Special Sediment Control Fence	1632.03	Rock Inlet Sediment Trap Type C
1607.01	Gravel Construction Entrance	1633.01	Temporary Rock Silt Check Type A
1622.01	Temporary Berms and Slope Drains	1633.02	Temporary Rock Silt Check Type B
1630.01	Riser Basin	1634.01	Temporary Rock Sediment Dam Type A
1630.02	Silt Basin Type B	1634.02	Temporary Rock Sediment Dam Type B
1630.03	Temporary Silt Ditch	1635.01	Rock Pipe Inlet Sediment Trap Type A
1630.04	Stilling Basin	1635.02	Rock Pipe Inlet Sediment Trap Type B
1630.05	Temporary Diversion	1640.01	Coir Fiber Baffle
1630.06	Special Stilling Basin	1645.01	Temporary Stream Crossing
1631.01	Matting Installation		

326613 PN
R:\Environmental\Design\7280845_Rev_tsh.dgn
brandonbarham

PROJECT REFERENCE NO.	SHEET NO.
17BP.5.R.48	EC-02
R/W SHEET NO.	
ROADWAY DESIGN ENGINEER	HYDRAULICS ENGINEER

TEMPORARY ROCK SILT CHECK TYPE 'A' WITH EXCELSIOR MATTING AND POLYACRYLAMIDE (PAM)

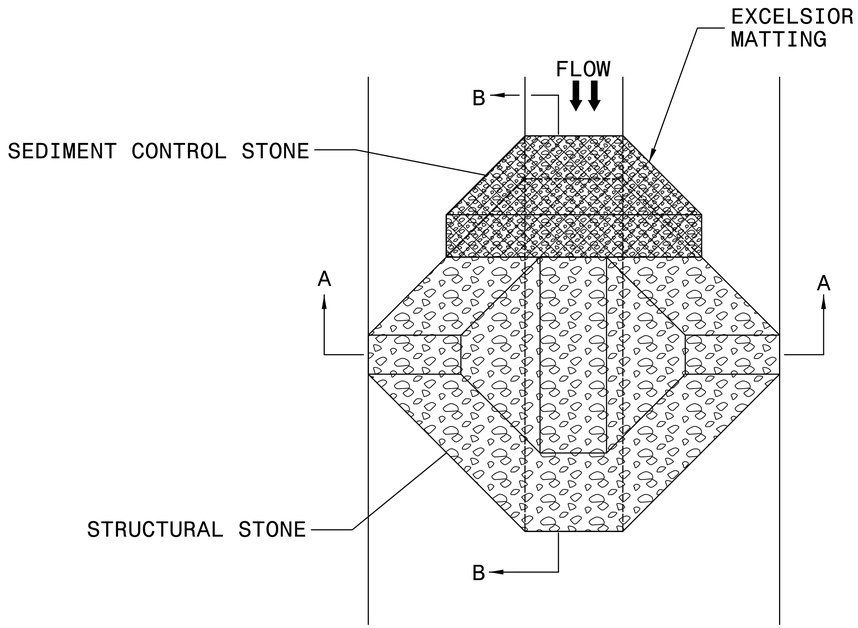

PLAN

NOTES:

INSTALL TEMPORARY ROCK SILT CHECK TYPE A IN ACCORDANCE WITH ROADWAY STANDARD DRAWING NO. 1633.01.

USE EXCELSIOR FOR MATTING MATERIAL AND ANCHOR MATTING SECTION AT TOP AND BOTTOM WITH CLASS B STONE.

PRIOR TO POLYACRYLAMIDE (PAM) APPLICATION, OBTAIN A SOIL SAMPLE FROM PROJECT LOCATION, AND FROM OFFSITE MATERIAL, AND ANALYZE FOR APPROPRIATE PAM FLOCCULANT TO BE APPLIED TO EACH ROCK SILT CHECK.

INITIALLY APPLY 4 OUNCES OF POLYACRYLAMIDE (PAM) TO TOP OF MATTING SECTION AND AFTER EVERY RAINFALL EVENT THAT EQUALS OR EXCEEDS 0.50 INCHES.

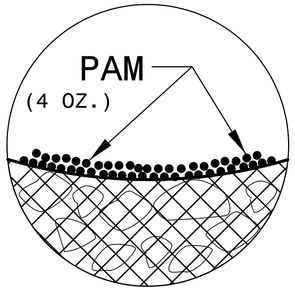

INSET A

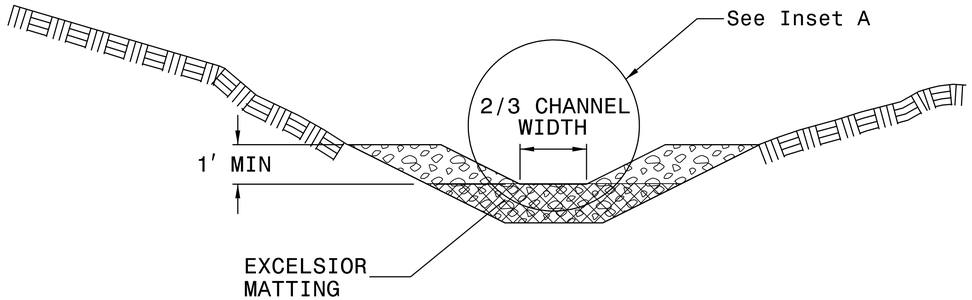

SECTION A-A

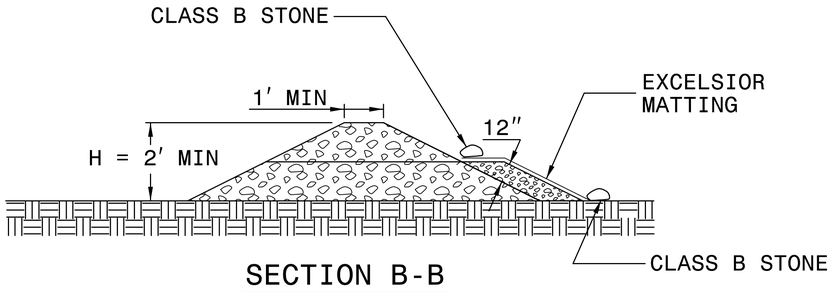

SECTION B-B

NOT TO SCALE

PROJECT REFERENCE NO.	SHEET NO.
17BP.5.R.48	EC-03
ROADWAY DESIGN ENGINEER	HYDRAULICS ENGINEER

DIVISION OF HIGHWAYS
STATE OF NORTH CAROLINA

SOIL STABILIZATION TIMEFRAMES

SITE DESCRIPTION	STABILIZATION TIME	TIMEFRAME EXCEPTIONS
PERIMETER DIKES, SWALES, DITCHES AND SLOPES	7 DAYS	NONE
HIGH QUALITY WATER (HQW) ZONES	7 DAYS	NONE
SLOPES STEEPER THAN 3:1	7 DAYS	IF SLOPES ARE 10' OR LESS IN LENGTH AND ARE NOT STEEPER THAN 2:1, 14 DAYS ARE ALLOWED.
SLOPES 3:1 OR FLATTER	14 DAYS	7 DAYS FOR SLOPES GREATER THAN 50' IN LENGTH.
ALL OTHER AREAS WITH SLOPES FLATTER THAN 4:1	14 DAYS	NONE, EXCEPT FOR PERIMETERS AND HQW ZONES.

BRIDGE 720045	PROJECT REFERENCE NO.	SHEET NO.
	17BP.5.R.48	EC-04/CONST.04
	R/W SHEET NO.	
	ROADWAY DESIGN ENGINEER	HYDRAULICS ENGINEER

Firm License No. C-0503
421 Fayetteville St.
Suite 400
Raleigh, NC 27601
T 919.380.8750
www.stewartinc.com

NC FIRM LICENSE No: P-1346
1151 SE Cary Parkway, Suite 101
Cary, NC 27518
(919) 557-0929
ECOLOGICAL ENGINEERING

8/17/99

REVISIONS

ENVIRONMENTALLY SENSITIVE AREA
SEE PROJECT SPECIAL PROVISIONS

NOTE:
UTILIZE TEMPORARY SEDIMENT BASIN OR SPECIAL STILLING BASIN(S) AS STILLING BASIN WHERE APPLICABLE.

CLEARING AND GRUBBING
EROSION CONTROL FOR
CONSTRUCTION SHEET 4

DETAIL 3
BANK STABILIZATION
(Not to Scale)

Type of Liner= CLASS II RIPRAP

STA 15+89 L

DETAIL 1
SPECIAL LATERAL 'V' DITCH
(Not to Scale)

Type of Liner= Class B Rip Rap

Min. D=1.5 Ft.
Max. d=1.0 Ft.

FROM STA 17+90 TO STA 19+60 L RT

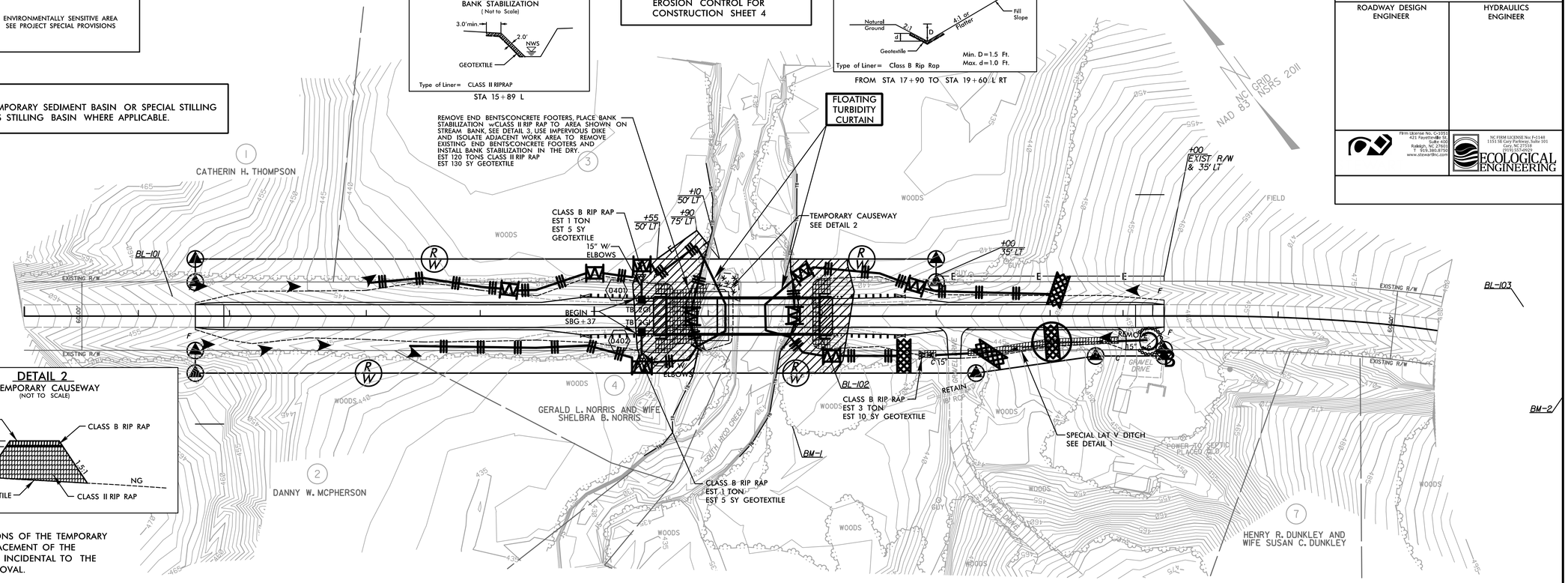

DETAIL 2
TEMPORARY CAUSEWAY
(NOT TO SCALE)

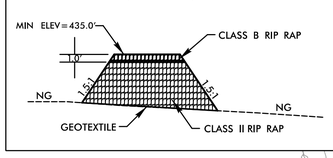

NOTE:
REMOVE ALL PORTIONS OF THE TEMPORARY CAUSEWAY. THE PLACEMENT OF THE IMPERVIOUS DIKE IS INCIDENTAL TO THE THE ABUTMENT REMOVAL.

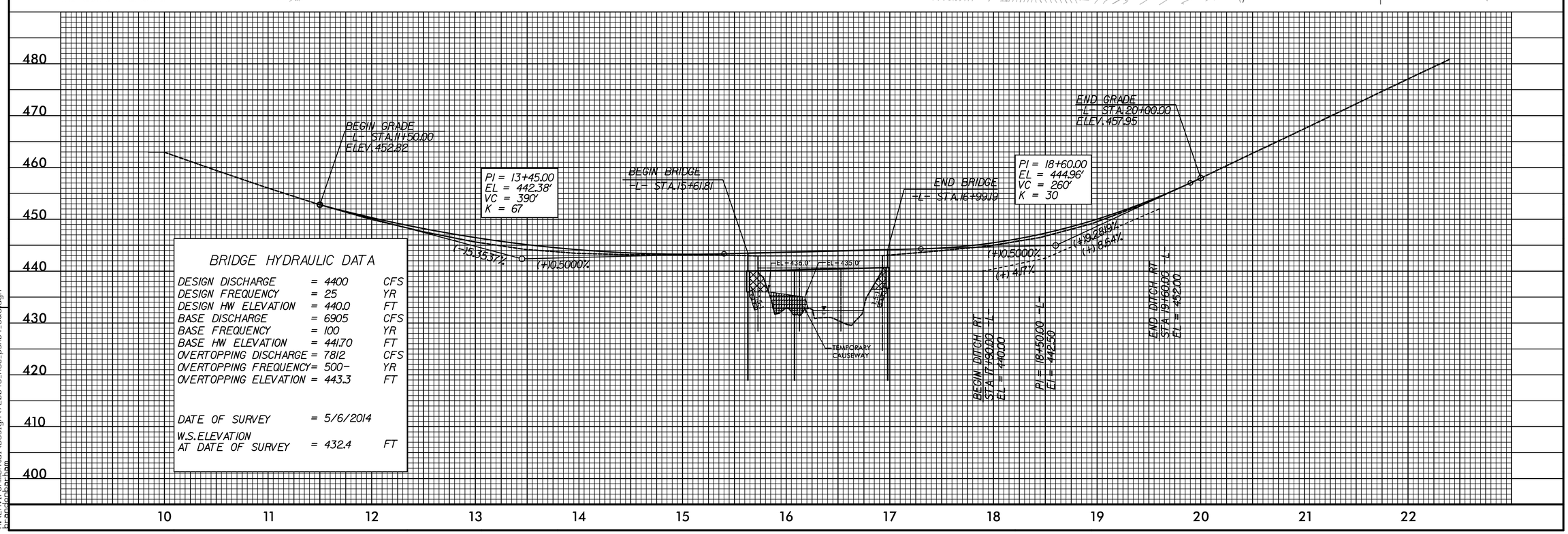

BRIDGE HYDRAULIC DATA

DESIGN DISCHARGE	= 4400	CFS
DESIGN FREQUENCY	= 25	YR
DESIGN HW ELEVATION	= 440.0	FT
BASE DISCHARGE	= 6905	CFS
BASE FREQUENCY	= 100	YR
BASE HW ELEVATION	= 441.70	FT
OVERTOPPING DISCHARGE	= 7812	CFS
OVERTOPPING FREQUENCY	= 500-	YR
OVERTOPPING ELEVATION	= 443.3	FT
DATE OF SURVEY	= 5/6/2014	
W.S.ELEVATION AT DATE OF SURVEY	= 432.4	FT

3:26:19 PM
R:\Environmental\Design\720045_Reu_psh04_C&G.dgn
beangonbarham

BRIDGE 720045	PROJECT REFERENCE NO.	SHEET NO.
	17BP.5.R.48	EC-05/CONST.05
	R/W SHEET NO.	
	ROADWAY DESIGN ENGINEER	HYDRAULICS ENGINEER

Firm License No. C-1051
421 Fayetteville St.
Suite 400
Raleigh, NC 27601
T 919.380.8750
www.stewartinc.com

NC FIRM LICENSE No: P-1146
1151 SE Cary Parkway, Suite 101
Cary, NC 27518
(919) 557-0029
ECOLOGICAL ENGINEERING

8/17/99

REVISIONS

ENVIRONMENTALLY SENSITIVE AREA
SEE PROJECT SPECIAL PROVISIONS

NOTE:
UTILIZE TEMPORARY SEDIMENT BASIN OR SPECIAL STILLING BASIN(S) AS STILLING BASIN WHERE APPLICABLE.

Place Matting for Erosion Control on Slope as Work Allows.

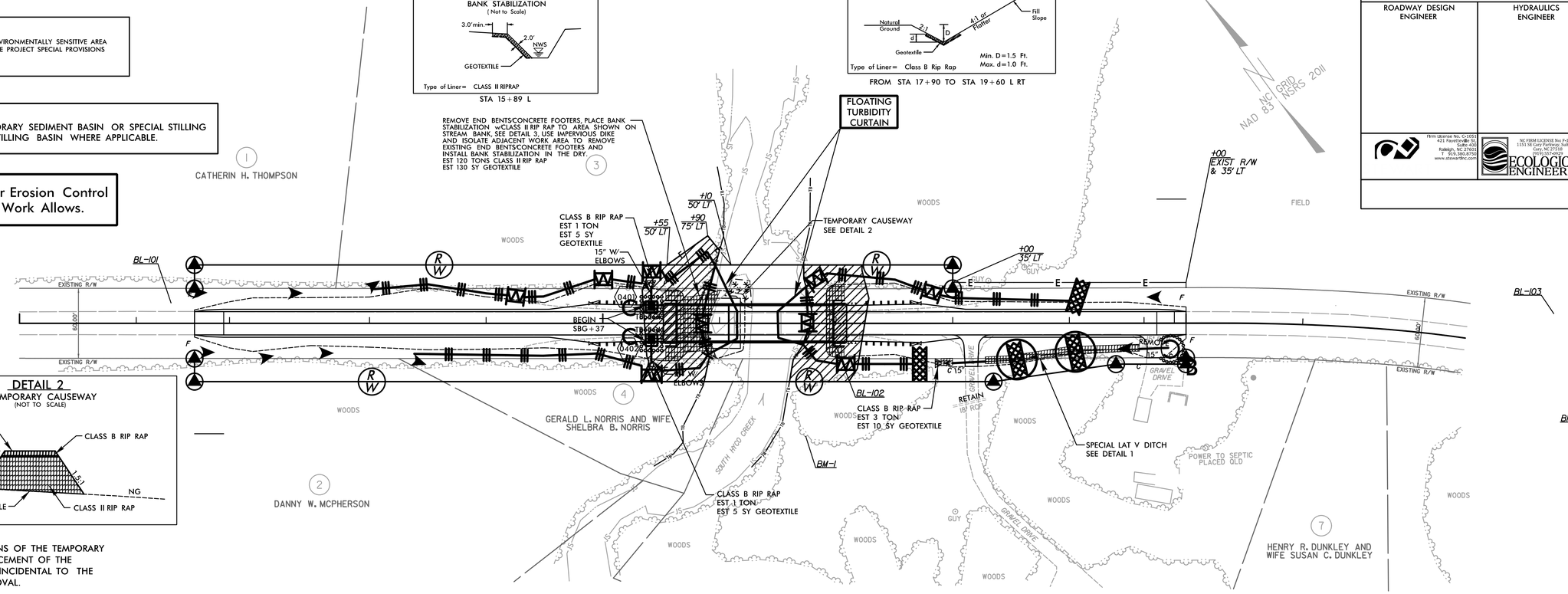

NOTE:
REMOVE ALL PORTIONS OF THE TEMPORARY CAUSEWAY. THE PLACEMENT OF THE IMPERVIOUS DIKE IS INCIDENTAL TO THE THE ABUTMENT REMOVAL.

BRIDGE HYDRAULIC DATA

DESIGN DISCHARGE	= 4400	CFS
DESIGN FREQUENCY	= 25	YR
DESIGN HW ELEVATION	= 440.0	FT
BASE DISCHARGE	= 6905	CFS
BASE FREQUENCY	= 100	YR
BASE HW ELEVATION	= 441.70	FT
OVERTOPPING DISCHARGE	= 7812	CFS
OVERTOPPING FREQUENCY	= 500-	YR
OVERTOPPING ELEVATION	= 443.3	FT
DATE OF SURVEY	= 5/6/2014	
W.S.ELEVATION AT DATE OF SURVEY	= 432.4	FT

3:26:16 PM
R:\Environmental\Design\720045_Reu_psh04_Final.dgn
bengonbarham

09/08/99

TIP PROJECT: 17BP.5.R.48

T.I.P. NO.	SHEET NO.
17BP.5.R.48	UO–1

STATE OF NORTH CAROLINA
DIVISION OF HIGHWAYS

UTILITIES BY OTHERS PLANS
PERSON COUNTY

LOCATION: BRIDGE NO. 45 OVER SOUTH HYCO CREEK ON SR 1102 (GORDONTON RD.)

TYPE OF WORK: PERMANENT TELECOMMUNICATIONS RELOCATION

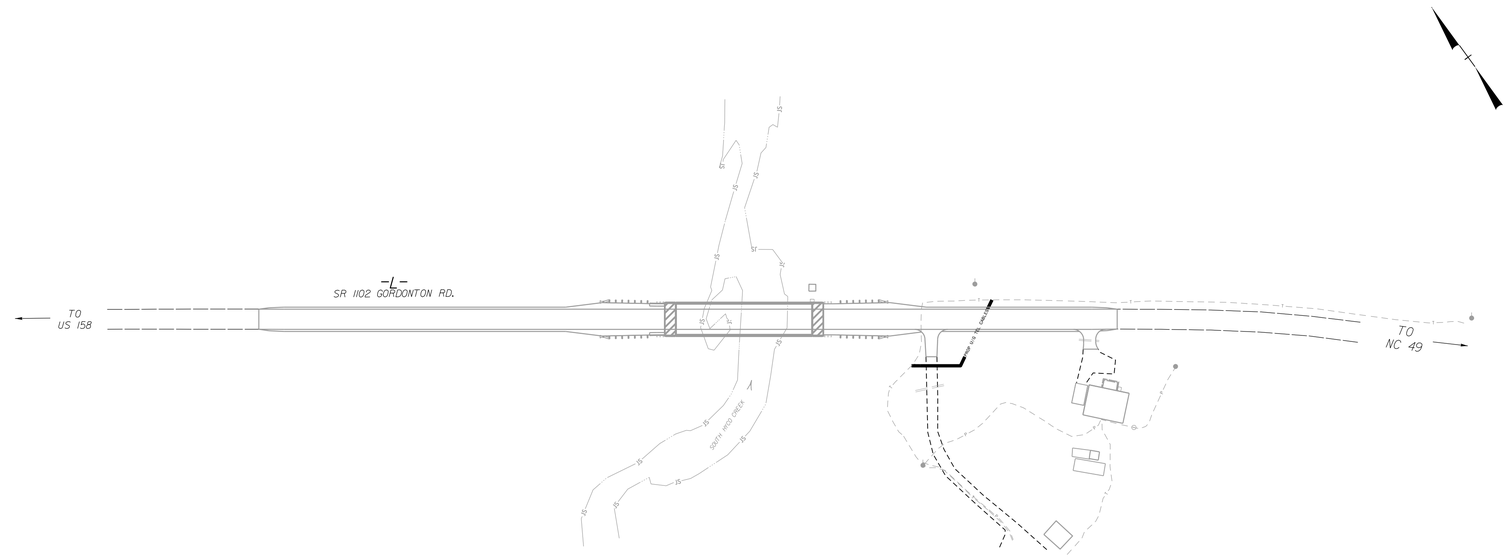

PRELIMINARY PLANS
DO NOT USE FOR CONSTRUCTION

GRAPHIC SCALES

50 25 0 50 100
PLANS

50 25 0 50 100
PROFILE (HORIZONTAL)

10 5 0 10 20
PROFILE (VERTICAL)

INDEX OF SHEETS

SHEET NO.	DESCRIPTION
UO–1	TITLE SHEET
UO–2	UTILITY BY OTHERS PLAN SHEETS

UTILITY OWNERS ON PROJECT

(A) CENTURY LINK – TELECOMMUNICATIONS

PREPARED IN THE OFFICE OF:

STEWART
421 FAYETTEVILLE ST, STE 400
RALEIGH, NC 27601
T 919.380.8750
Firm License #: C-1051
www.stewartinc.com
PROJECT #:B11001

DAVID RUGGLES, PE — PROJECT ENGINEER
MICHAEL BURNS, EI — PROJECT DESIGN ENGINEER

2/26/2016
...\Ray_Ut\Proj\720045_utl_tsh.dgn
USER:nasstourg

PROJECT REFERENCE NO.	SHEET NO.
17BP.5.R.48	U0-2

UTILITIES BY OTHERS

NOTE:
ALL PROPOSED UTILITY WORK SHOWN ON THIS SHEET WILL BE DONE BY OTHERS

Firm License No. C-1051
421 Fayetteville St.
Suite 400
Raleigh, NC 27601
T. 919.380.8750
www.stewartinc.com
STEWART

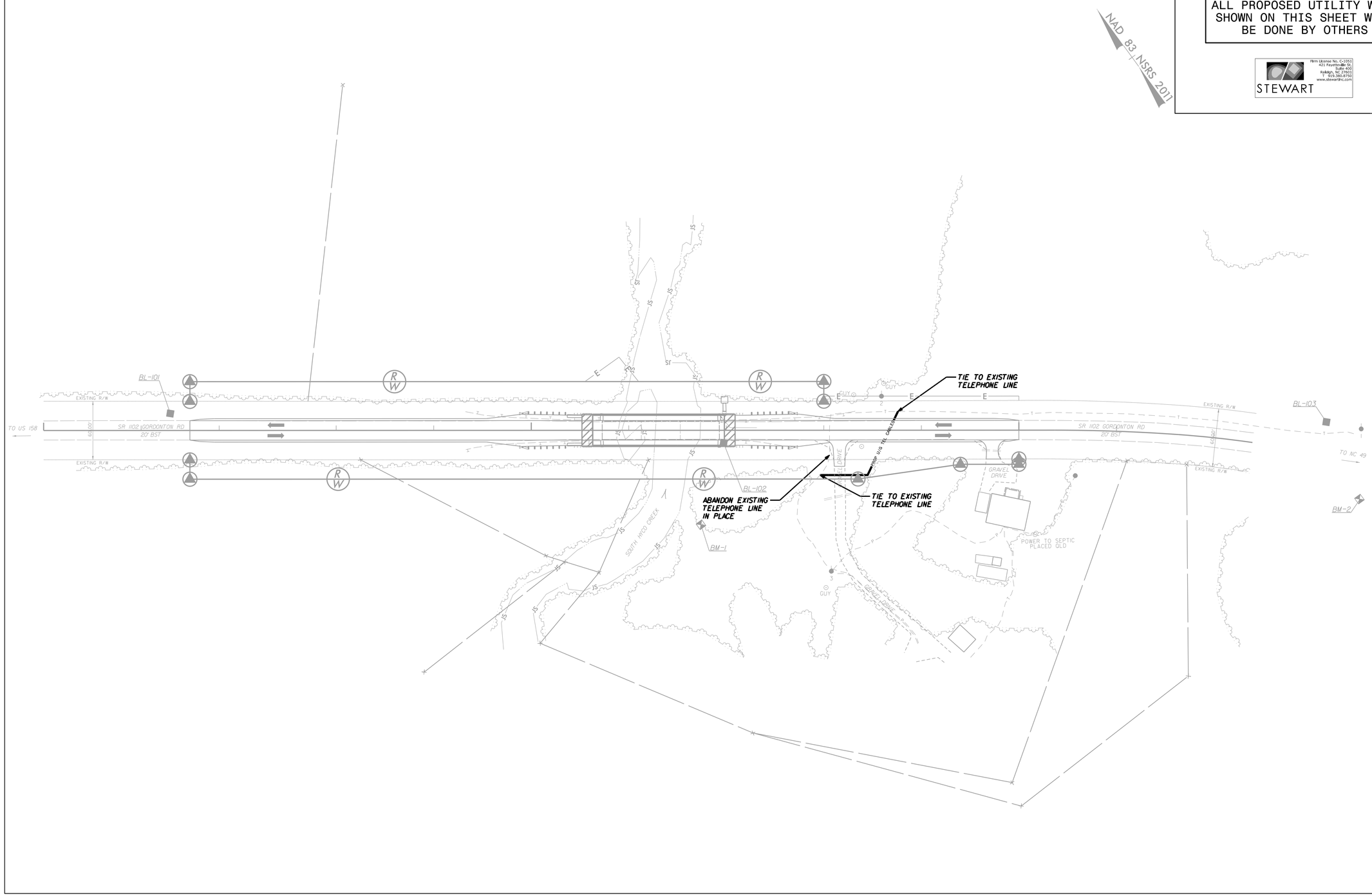

8/17/99

2/26/2016
R:\Roadway\20045_utl_psh_02.dgn
USER: Bastoria

PROJ. REFERENCE NO.	SHEET NO.
17BP.5.R.48	X-1A

DOCUMENT NOT CONSIDERED FINAL UNLESS ALL SIGNATURES COMPLETED

CROSS SECTION SUMMARY

NOTE: EMBANKMENT COLUMN DOES NOT INCLUDE BACKFILL FOR UNDERCUT

STATION –L–	UNCL. EXC. (CU. YD.)	EMBT. (CU. YD.)
11+50.00	0	0
11+80.00	17	2
12+00.00	9	4
12+50.00	11	32
13+00.00	3	37
13+50.00	0	47
14+00.00	3	45
14+50.00	13	30
15+00.00	27	33
15+50.00	30	41
17+00.00	0	0
17+50.00	6	78
18+00.00	26	45
18+15.92	9	17
18+50.00	14	21
19+00.00	23	26
19+50.00	24	22
19+72.71	14	2
20+00.00	18	1
20+50.00	0	0

Note:
Approximate quantities only. Unclassified Excavation, Fine Grading, Clearing and Grubbing, and Removal of Existing Pavement will be paid for at the contract lump sum price for "Grading."

PROJ. REFERENCE NO.	SHEET NO.
17BP.5.R.48	X-1

DOCUMENT NOT CONSIDERED FINAL UNLESS ALL SIGNATURES COMPLETED

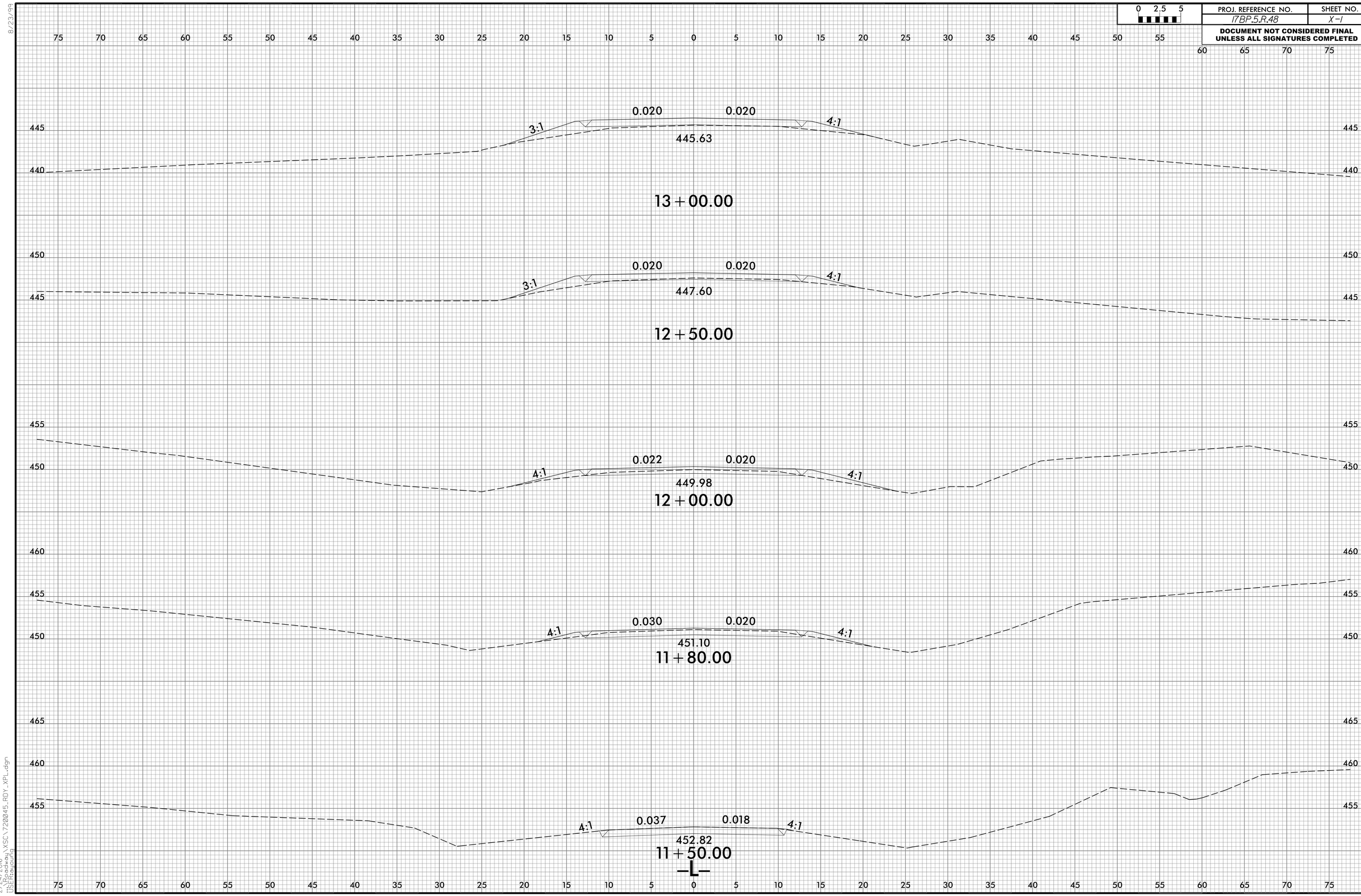

8/23/99

2/24/2016
C:\Users\VSC\720045_RDY_XPL.dgn
USER:rajourlq

0 2.5 5	PROJ. REFERENCE NO.	SHEET NO.
	17BP.5.R.48	X-2

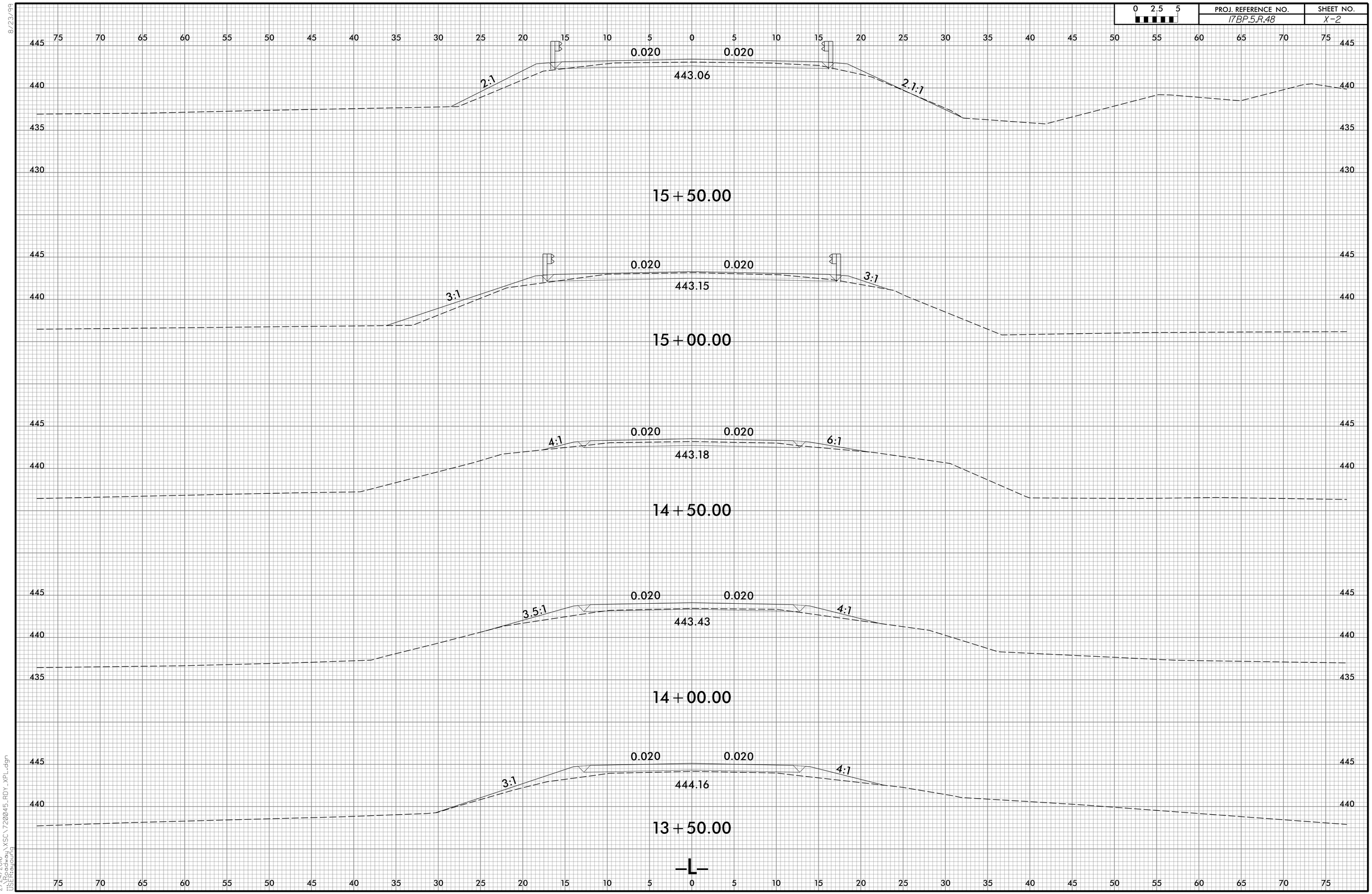

8/23/99

2/24/2016
C:\Users\USCV720045\Desktop\
USER:rajoung

0 2.5 5	PROJ. REFERENCE NO.	SHEET NO.
	17BP.5.R.48	X-3

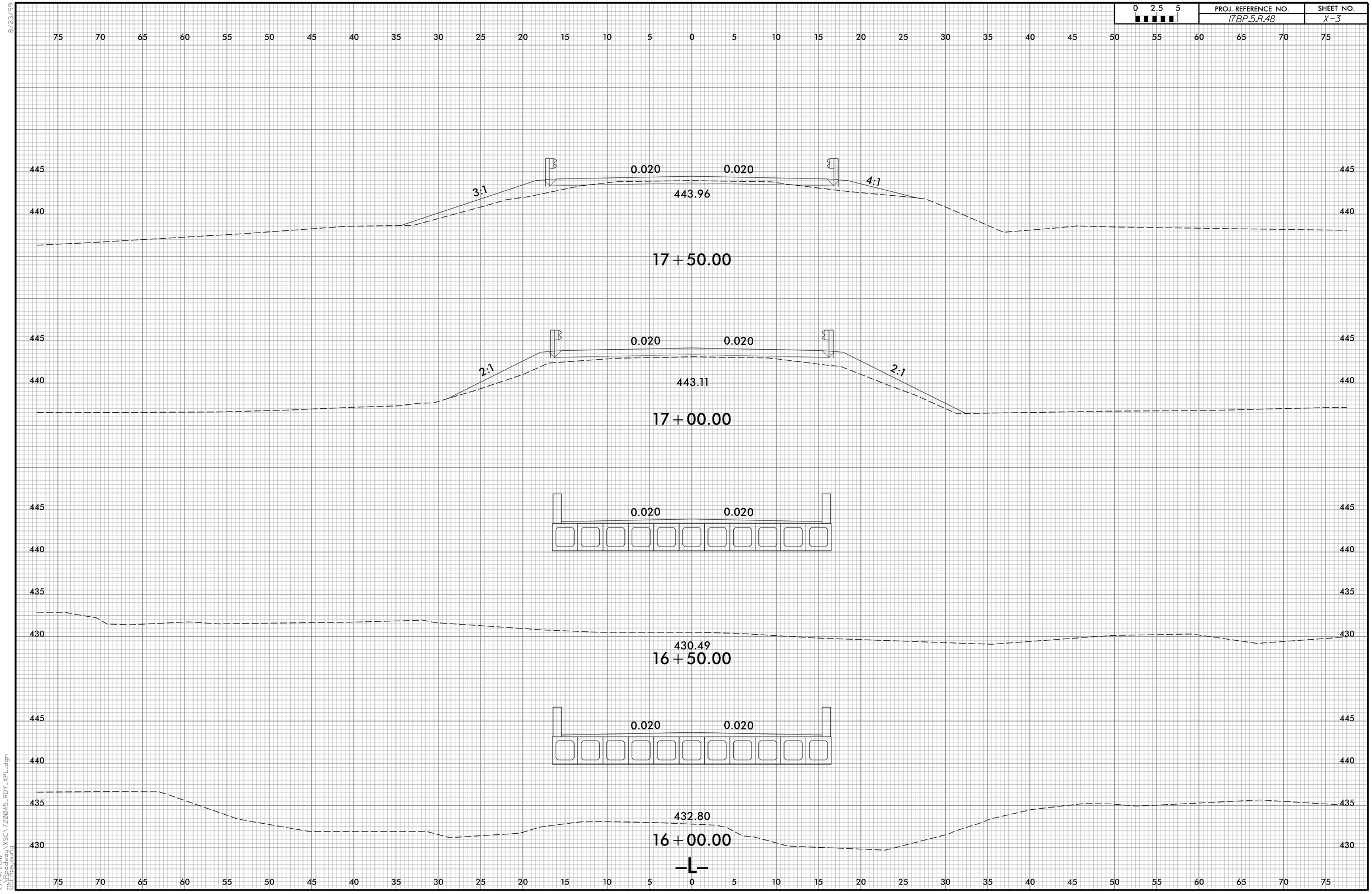

8/23/99

2/24/2016
C:\Projects\XSC\720045_RDY_XPL.dgn
USER:bujoung

0 2.5 5	PROJ. REFERENCE NO.	SHEET NO.
	17BP.5.R.48	X-4

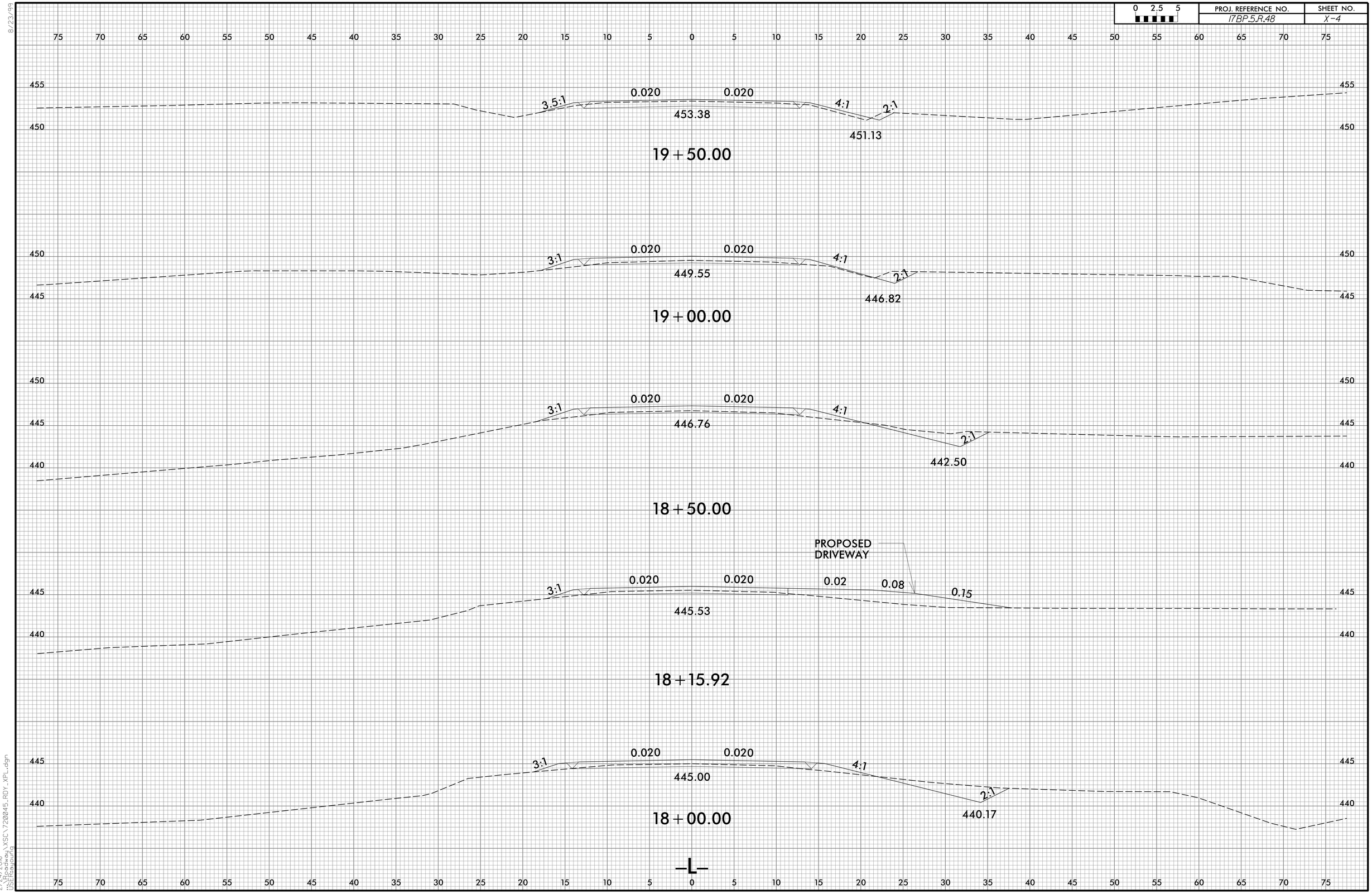

8/23/99

2/24/2016
USER:baoung
\Highway\XSC\720045_RDY_XPL.dgn

8/23/99

0 2.5 5	PROJ. REFERENCE NO.	SHEET NO.
	17BP.5.R.48	X-5

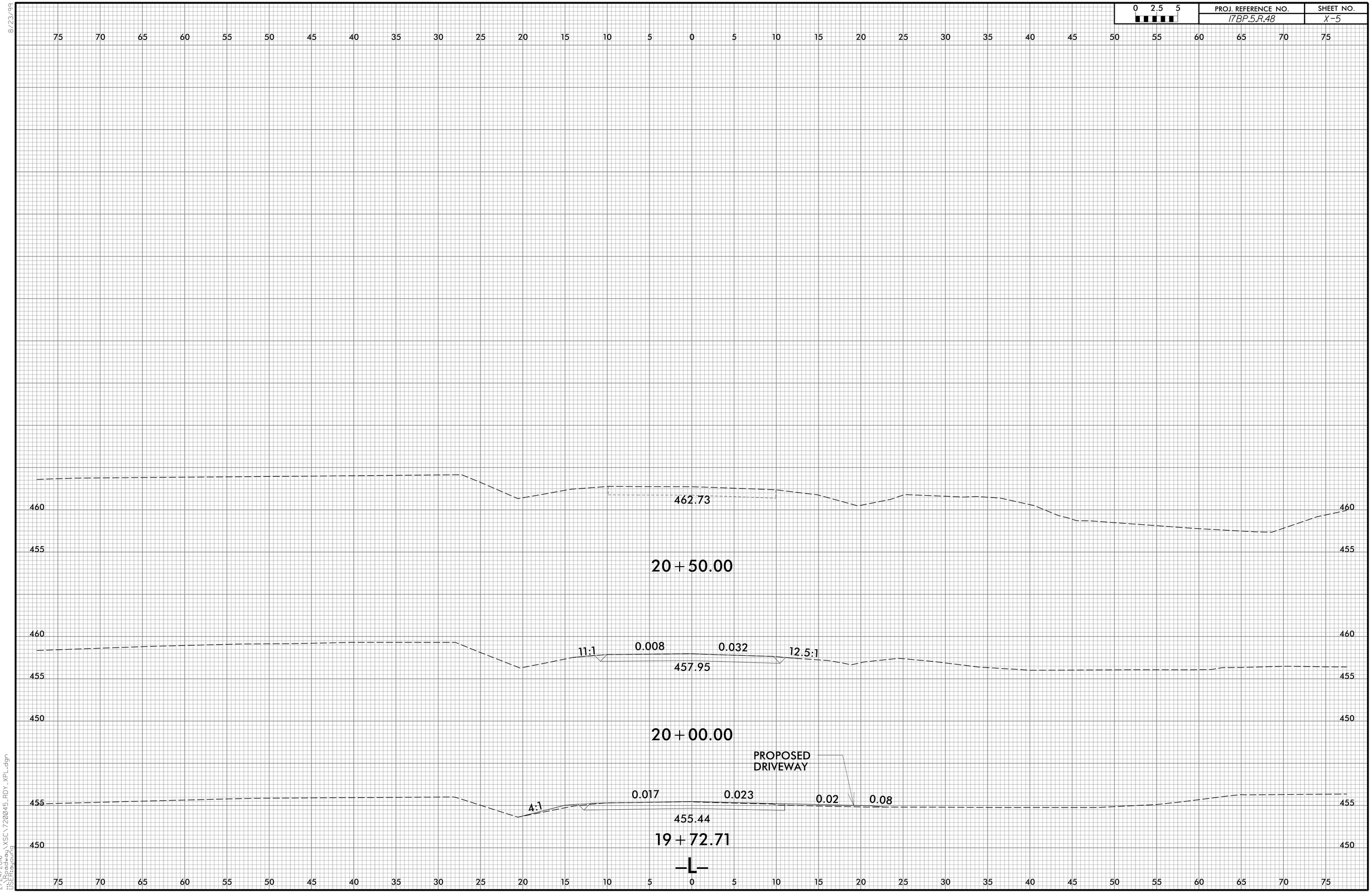

2/24/2016
r:\roadway\XSC\720045_RDY_XPL.dgn
USER:bujoung

DocuSign Envelope ID: E9741AAC-7F54-4C29-8FAB-30EDB6ECE9EF

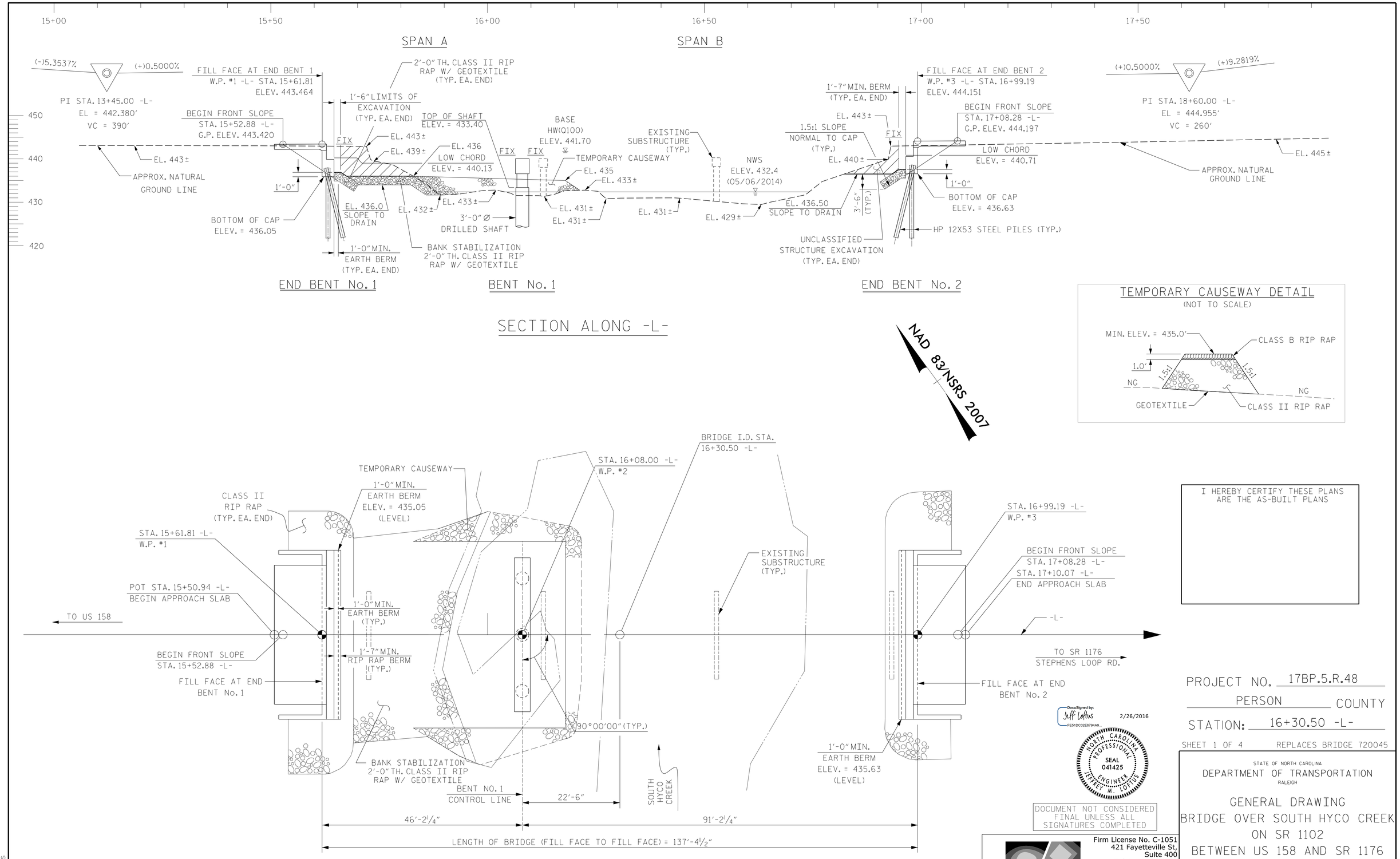

I HEREBY CERTIFY THESE PLANS ARE THE AS-BUILT PLANS

DocuSigned by: Jeff Loftus FE51DC02E6794A9... 2/26/2016

NORTH CAROLINA PROFESSIONAL SEAL 041425 ENGINEER JEFFREY M. LOFTUS

DOCUMENT NOT CONSIDERED FINAL UNLESS ALL SIGNATURES COMPLETED

PROJECT NO. 17BP.5.R.48

PERSON COUNTY

STATION: 16+30.50 -L-

SHEET 1 OF 4 REPLACES BRIDGE 720045

STATE OF NORTH CAROLINA
DEPARTMENT OF TRANSPORTATION
RALEIGH

GENERAL DRAWING
BRIDGE OVER SOUTH HYCO CREEK
ON SR 1102
BETWEEN US 158 AND SR 1176

Firm License No. C-1051
421 Fayetteville St,
Suite 400
Raleigh, NC 27601
T 919.380.8750
www.stewartinc.com
STEWART

REVISIONS						
NO.	BY:	DATE:	NO.	BY:	DATE:	
1			3			
2			4			

SHEET NO. S-1
TOTAL SHEETS 20

DRAWN BY:	J. LOFTUS	DATE :	09-14
CHECKED BY:	D. RUGGLES	DATE :	09-14
DESIGN ENGINEER OF RECORD:	J. LOFTUS	DATE :	09-14

1/21/2016
...\400_001_17BP5R48_SMU_GD01.dgn
USER:jloftus

DocuSign Envelope ID: E9741AAC-7F54-4C29-8FAB-30EDB6ECE9EF

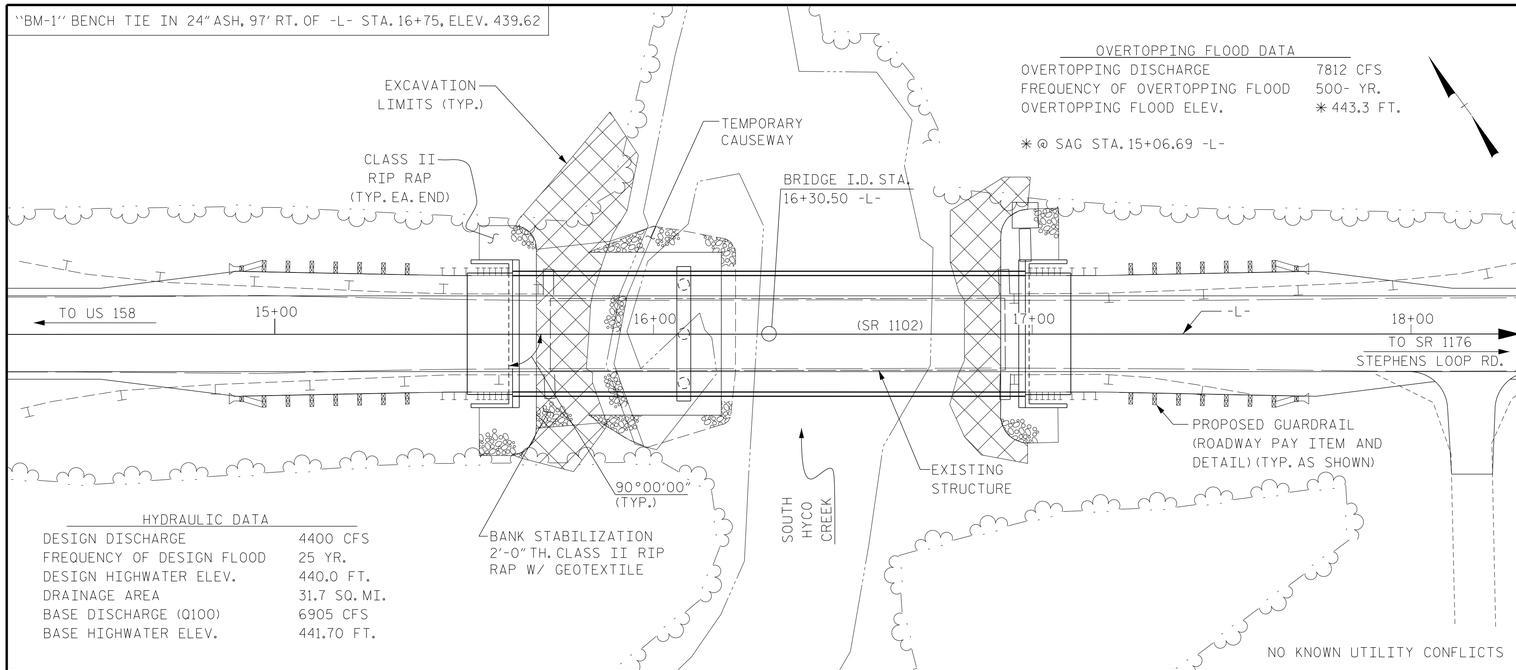

LOCATION SKETCH

GENERAL NOTES:

1. ASSUMED LIVE LOAD = HL-93 OR ALTERNATE LOADING
2. THIS BRIDGE HAS BEEN DESIGNED IN ACCORDANCE WITH THE AASHTO LRFD BRIDGE DESIGN SPECIFICATIONS
3. THIS BRIDGE IS LOCATED IN SEISMIC ZONE 1
4. THIS STRUCTURE HAS BEEN DESIGNED IN ACCORDANCE WITH "HEC 18 - EVALUATING SCOUR AT BRIDGES."
5. THE SUBSTRUCTURE OF THE EXISTING BRIDGE INDICATED ON THE PLANS IS FROM THE BEST INFORMATION AVAILABLE. SINCE THIS INFORMATION IS SHOWN FOR THE CONVENIENCE OF THE CONTRACTOR, THE CONTRACTOR SHALL HAVE NO CLAIM WHATSOEVER AGAINST THE DEPARTMENT OF TRANSPORTATION FOR ANY DELAYS OR ADDITIONAL COST INCURRED BASED ON DIFFERENCE BETWEEN THE EXISTING BRIDGE SUBSTRUCTURE SHOWN ON THE PLANS AND THE ACTUAL CONDITIONS AT THE PROJECT SITE.
6. REMOVAL OF THE EXISTING BRIDGE SHALL BE PERFORMED SO AS NOT TO ALLOW DEBRIS TO FALL INTO THE WATER. THE CONTRACTOR SHALL REMOVE THE BRIDGE AND SUBMIT PLANS FOR DEMOLITION IN ACCORDANCE WITH ARTICLE 402-2 OF THE STANDARD SPECIFICATIONS.
7. FOR OTHER DESIGN DATA AND GENERAL NOTES, SEE SHEET SN.
8. FOR SUBMITTAL OF WORKING DRAWINGS, SEE SPECIAL PROVISIONS.
9. FOR FALSEWORK AND FORMWORK, SEE SPECIAL PROVISIONS.
10. FOR CRANE SAFETY, SEE SPECIAL PROVISIONS.
11. FOR GROUT FOR STRUCTURES, SEE SPECIAL PROVISIONS.
12. FOR EROSION CONTROL MEASURES, SEE EROSION CONTROL PLANS.
13. ASPHALT WEARING SURFACE IS INCLUDED IN ROADWAY QUANTITY ON ROADWAY PLANS.
14. THE MATERIAL SHOWN IN THE CROSS-HATCHED AREA SHALL BE EXCAVATED FOR A DISTANCE OF 60± FT LEFT SIDE AND 35'+- RIGHT SIDE OF CENTERLINE ROADWAY AS DIRECTED BY THE ENGINEER. THIS WORK WILL BE PAID FOR AT THE CONTRACT LUMP SUM PRICE FOR UNCLASSIFIED STRUCTURE EXCAVATION. SEE SECTION 412 OF THE STANDARD SPECIFICATIONS
15. AT THE CONTRACTOR'S OPTION, AND UPON REMOVAL OF THE CAUSEWAY, THE CLASS II RIP RAP USED IN THE CAUSEWAY MAY BE PLACED AS RIP RAP SLOPE PROTECTION. SEE SPECIAL PROVISIONS FOR CONSTRUCTION, MAINTENANCE AND REMOVAL OF TEMPORARY ACCESS AT STATION 16+30.50 -L-.
16. INASMUCH AS THE PAINT SYSTEM ON THE EXISTING STRUCTURAL STEEL CONTAINS LEAD, THE CONTRACTOR'S ATTENTION IS DIRECTED TO ARTICLE 107-1 OF THE STANDARD SPECIFICATIONS. ANY COSTS RESULTING FROM COMPLIANCE WITH APPLICABLE STATE OR FEDERAL REGULATIONS PERTAINING TO HANDLING OF MATERIALS CONTAINING LEAD BASED PAINT SHALL BE INCLUDED IN THE BID PRICE FOR "REMOVAL OF EXISTING STRUCTURE AT STATION 16+30.50 -L-."
17. THE EXISTING STRUCTURE #720045 CONSISTING OF THREE (3) STEEL GIRDER SPANS @ 40'-3", 40'-1", & 40'-5" (121'-0" TOTAL LENGTH), 19'-1" CLEAR ROADWAY WIDTH AND TIMBER DECKING WITH AN ASPHALT WEARING SURFACE ON TIMBER END BENTS & BENTS WITH TIMBER PILES ENCASED WITH CONCRETE NEAR THE WATER LINE AND LOCATED AT THE PROPOSED STRUCTURE SHALL BE REMOVED IN THEIR ENTIRETY (INCLUDING PILES AND CONCRETE ENCASEMENT).
18. FOR ASBESTOS ASSESSMENT, SEE SPECIAL PROVISIONS.

FOUNDATION NOTES:

1. FOR PILES, SEE SECTION 450 OF THE STANDARD SPECIFICATIONS.
2. PILES AT END BENT NO. 1 ARE DESIGNED FOR A FACTORED RESISTANCE OF 95 TONS PER PILE.
3. DRIVE PILES AT END BENT NO. 1 TO A REQUIRED DRIVING RESISTANCE OF 160 TONS PER PILE.
4. PILES AT END BENT NO. 2 ARE DESIGNED FOR A FACTORED RESISTANCE OF 105 TONS PER PILE.
5. DRIVE PILES AT END BENT NO. 2 TO A REQUIRED DRIVING RESISTANCE OF 175 TONS PER PILE.
6. FOR DRILLED PIERS, SEE SECTION 411 OF THE STANDARD SPECIFICATIONS.
7. DRILLED PIERS AT BENT NO. 1 ARE DESIGNED FOR A FACTORED RESISTANCE OF 340 TONS PER PIER. CHECK FIELD CONDITIONS FOR THE REQUIRED TIP RESISTANCE OF 35 TSF.
8. PERMANENT STEEL CASINGS ARE REQUIRED FOR DRILLED PIERS AT BENT NO. 1. DO NOT EXTEND PERMANENT CASINGS BELOW ELEVATION 398.5 FT (LT & C) AND 409 FT (RT) WITHOUT PRIOR APPROVAL FROM THE ENGINEER.
9. INSTALL DRILLED PIERS AT BENT NO. 1 TO A TIP ELEVATION NO HIGHER THAN 382 FT (LT & C) AND 392 FT (RT) AND WITH THE REQUIRED TIP RESISTANCE.
10. THE SCOUR CRITICAL ELEVATION FOR BENT NO. 1 IS ELEVATION 417.5 FT. SCOUR CRITICAL ELEVATIONS ARE USED TO MONITOR POSSIBLE SCOUR PROBLEMS DURING THE LIFE OF THE STRUCTURE.
11. SPT MAY BE REQUIRED FOR DRILLED PIERS. THE ENGINEER WILL DETERMINE THE NEED FOR SPT. FOR SPT TESTING, SEE SECTION 411 OF THE STANDARD SPECIFICATIONS.
12. CSL TUBES ARE REQUIRED AND CSL TESTING MAY BE REQUIRED FOR DRILLED PIERS AT BENT NO. 1. FOR CSL TESTING, SEE SECTION 411 OF THE STANDARD SPECIFICATIONS.
13. SID INSPECTIONS MAY BE REQUIRED FOR DRILLED PIERS. THE ENGINEER WILL DETERMINE THE NEED FOR SID INSPECTIONS. FOR SID INSPECTIONS, SEE SECTION 411 OF THE STANDARD SPECIFICATIONS.

TOTAL BILL OF MATERIAL

	CONST. MAINT. & REMOVAL OF TEMP. ACCESS	REMOVAL OF EXISTING STRUCTURE	3'-0" DIA. DRILLED PIERS	PERMANENT STEEL CASING FOR 3'-0" DIA. DRILLED PIER	SID INSPECTION	SPT TESTING	CSL TESTING	UNCLASSIFIED STRUCTURE EXCAVATION	CLASS A CONCRETE	BRIDGE APPROACH SLABS	REINF. STEEL	SPIRAL COLUMN REINF. STEEL	HP 12X53 STEEL PILES		VERTICAL CONCRETE BARRIER RAIL	RIP RAP CLASS II (2'-0" THICK)	GEOTEXTILE FOR DRAINAGE	ELASTOMERIC BEARINGS	3'-0" x 2'-9" PRESTRESSED CONCRETE BOX BEAMS		ASBESTOS ASSESSMENT
	LUMP SUM	LUMP SUM	LF	LF	EACH	EACH	EACH	LUMP SUM	CY	LUMP SUM	LBS	LBS	No.	LF	LF	TON	SY	LUMP SUM	No.	LF	LUMP SUM
SUPERSTRUCTURE										LUMP SUM					270.25			LUMP SUM	22	1485	
END BENT No. 1								LUMP SUM	25.5		3,576		7	175		187	205				
BENT No. 1			144.25	94.20					16.5		15,458	2,620									
END BENT No. 2								LUMP SUM	25.5		3,576		7	175		73	81				
TOTAL	LUMP SUM	LUMP SUM	144.25	94.20	1	3	1	LUMP SUM	67.5	LUMP SUM	22,610	2,620	14	350	270.25	260	286	LUMP SUM	22	1485	LUMP SUM

DocuSigned by: Jeff Loftus
FE51DC02E6794A9...
2/26/2016

NORTH CAROLINA PROFESSIONAL SEAL 041425 ENGINEER JEFFREY M. LOFTUS

DOCUMENT NOT CONSIDERED FINAL UNLESS ALL SIGNATURES COMPLETED

PROJECT NO. 17BP.5.R.48
PERSON COUNTY
STATION: 16+30.50 -L-

SHEET 2 OF 4

STATE OF NORTH CAROLINA
DEPARTMENT OF TRANSPORTATION
RALEIGH

GENERAL DRAWING
BRIDGE OVER SOUTH HYCO CREEK
ON SR 1102
BETWEEN US 158 AND SR 1176

STEWART
Firm License No. C-1051
421 Fayetteville St,
Suite 400
Raleigh, NC 27601
T 919.380.8750
www.stewartinc.com

REVISIONS						SHEET NO.
NO.	BY:	DATE:	NO.	BY:	DATE:	S-2
1			3			TOTAL SHEETS
2			4			20

DRAWN BY: J. LOFTUS DATE: 09-14
CHECKED BY: D. RUGGLES DATE: 09-14
DESIGN ENGINEER OF RECORD: J. LOFTUS DATE: 09-14

1/21/2016
...\400_002_17BP5R48_SMU_GD02.dgn
USER:default

DocuSign Envelope ID: E9741AAC-7F54-4C29-8FAB-30EDB6ECE9EF

LOAD AND RESISTANCE FACTOR RATING (LRFD) SUMMARY FOR PRESTRESSED CONCRETE GIRDERS

LEVEL		VEHICLE	WEIGHT (W) (TONS)	CONTROLLING LOAD RATING	MINIMUM RATING FACTORS (RF)	TONS = W X RF	STRENGTH I LIMIT STATE											SERVICE III LIMIT STATE						COMMENT NUMBER
								MOMENT					SHEAR						MOMENT					
							LIVELOAD FACTORS	DISTRIBUTION FACTORS (DF)	RATING FACTOR	SPAN	GIRDER LOCATION	DISTANCE FROM LEFT END OF SPAN (ft)	DISTRIBUTION FACTORS (DF)	RATING FACTOR	SPAN	GIRDER LOCATION	DISTANCE FROM LEFT END OF SPAN (ft)	LIVELOAD FACTORS	DISTRIBUTION FACTORS (DF)	RATING FACTOR	SPAN	GIRDER LOCATION	DISTANCE FROM LEFT END OF SPAN (ft)	
DESIGN LOAD RATING		HL-93(Inv)	N/A	1	1.86	--	1.75	0.284	2.46	45'	EL	21.8	0.551	1.86	45'	EL	3.8	0.80	0.284	1.97	45'	EL	21.8	
		HL-93(Opr)	N/A	--	2.44	--	1.35	0.284	3.19	45'	EL	21.8	0.551	2.44	45'	EL	3.8	N/A	--	--	--	--	--	
		HS-20(Inv)	36.000	2	2.21	79.56	1.75	0.284	3.03	45'	EL	21.8	0.551	2.21	45'	EL	3.8	0.80	0.284	2.42	45'	EL	21.8	
		HS-20(Opr)	36.000	--	2.90	104.40	1.35	0.284	3.92	45'	EL	21.8	0.551	2.90	45'	EL	3.8	N/A	--	--	--	--	--	
LEGAL LOAD RATING	SV	SNSH	13.500	--	4.79	64.66	1.4	0.284	7.48	45'	EL	21.8	0.551	6.27	45'	EL	3.8	0.80	0.284	4.79	45'	EL	21.8	
		SNGARBS2	20.000	--	3.84	76.80	1.4	0.284	5.98	45'	EL	26.3	0.551	4.59	45'	EL	3.8	0.80	0.284	3.84	45'	EL	21.8	
		SNAGRIS2	22.000	--	3.75	82.50	1.4	0.284	5.80	45'	EL	17.3	0.551	4.32	45'	EL	3.8	0.80	0.284	3.75	45'	EL	26.3	
		SNCOTTS3	27.250	--	2.38	64.85	1.4	0.284	3.72	45'	EL	21.8	0.551	3.08	45'	EL	3.8	0.80	0.284	2.38	45'	EL	21.8	
		SNAGGRS4	34.925	--	2.09	72.99	1.4	0.284	3.27	45'	EL	21.8	0.551	2.65	45'	EL	3.8	0.80	0.284	2.09	45'	EL	21.8	
		SNS5A	35.550	--	2.04	72.52	1.4	0.284	3.19	45'	EL	21.8	0.551	2.75	45'	EL	3.8	0.80	0.284	2.04	45'	EL	21.8	
		SNS6A	39.950	--	1.92	76.70	1.4	0.284	3.00	45'	EL	21.8	0.551	2.55	45'	EL	3.8	0.80	0.284	1.92	45'	EL	21.8	
		SNS7B	42.000	--	1.83	76.86	1.4	0.284	2.86	45'	EL	21.8	0.551	2.58	45'	EL	3.8	0.80	0.284	1.83	45'	EL	21.8	
	TTST	TNAGRIT3	33.000	--	2.36	77.88	1.4	0.284	3.68	45'	EL	21.8	0.551	3.01	45'	EL	3.8	0.80	0.284	2.36	45'	EL	21.8	
		TNT4A	33.075	--	2.38	78.71	1.4	0.284	3.71	45'	EL	21.8	0.551	2.89	45'	EL	3.8	0.80	0.284	2.38	45'	EL	21.8	
		TNT6A	41.600	--	1.99	82.78	1.4	0.284	3.11	45'	EL	21.8	0.551	2.81	45'	EL	3.8	0.80	0.284	1.99	45'	EL	21.8	
		TNT7A	42.000	--	2.03	85.26	1.4	0.284	3.17	45'	EL	21.8	0.551	2.58	45'	EL	3.8	0.80	0.284	2.03	45'	EL	21.8	
		TNT7B	42.000	--	2.11	88.62	1.4	0.284	3.30	45'	EL	21.8	0.551	2.46	45'	EL	3.8	0.80	0.284	2.11	45'	EL	21.8	
		TNAGRIT4	43.000	--	2.02	86.86	1.4	0.284	3.15	45'	EL	21.8	0.551	2.36	45'	EL	3.8	0.80	0.284	2.02	45'	EL	21.8	
		TNAGT5A	45.000	--	1.87	84.15	1.4	0.284	2.93	45'	EL	21.8	0.551	2.43	45'	EL	3.8	0.80	0.284	1.87	45'	EL	21.8	
		TNAGT5B	45.000	3	1.83	82.35	1.4	0.284	2.86	45'	EL	21.8	0.551	2.23	45'	EL	3.8	0.80	0.284	1.83	45'	EL	21.8	

LOAD FACTORS:

DESIGN LOAD RATING FACTORS	LIMIT STATE	γ_{DC}	γ_{DW}
	STRENGTH I	1.25	1.50
	SERVICE III	1.00	1.00

NOTES:

MINIMUM RATING FACTORS ARE BASED ON THE STRENGTH I AND SERVICE III LIMIT STATES.

ALLOWABLE STRESSES FOR SERVICE III LIMIT STATE ARE AS REQUIRED FOR DESIGN.

COMMENTS:

1. ALL RATINGS BASED UPON 0 PSI TENSION IN THE PRE-COMPRESSED TENSILE ZONE.
2. LOSSES WERE CALCULATED USING THE AASHTO REFINED METHOD FOR CALCULATING TIME DEPENDENT LOSSES. LOSSES ARE AS FOLLOWS:
   INITIAL LOSSES - 8.27 KSI (4.08%)
   TOTAL LOSSES - 35.31 KSI (17.44%)
3. Ec = 4286.83 KSI (FINAL)

⟨#⟩ CONTROLLING LOAD RATING

⟨1⟩ DESIGN LOAD RATING (HL-93)
⟨2⟩ DESIGN LOAD RATING (HS-20)
⟨3⟩ LEGAL LOAD RATING **
** SEE CHART FOR VEHICLE TYPE

GIRDER LOCATION

I - INTERIOR GIRDER
EL - EXTERIOR LEFT GIRDER
ER - EXTERIOR RIGHT GIRDER

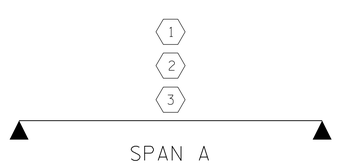

LRFR SUMMARY

FOR 45' UNIT

DocuSigned by: Jeff Loftus FE51DC02E67040... 2/26/2016

NORTH CAROLINA PROFESSIONAL SEAL 041425 ENGINEER JEFFREY M. LOFTUS

DOCUMENT NOT CONSIDERED FINAL UNLESS ALL SIGNATURES COMPLETED

PROJECT NO. 17BP.5.R.48

PERSON COUNTY

STATION: 16+30.50 -L-

SHEET 3 OF 4

STATE OF NORTH CAROLINA
DEPARTMENT OF TRANSPORTATION
RALEIGH

STANDARD

LRFR SUMMARY FOR 45' BOX BEAM UNIT 90° SKEW (NON-INTERSTATE TRAFFIC)

Firm License No. C-1051
421 Fayetteville St,
Suite 400
Raleigh, NC 27601
T 919.380.8750
www.stewartinc.com
STEWART

REVISIONS						SHEET NO.
NO.	BY:	DATE:	NO.	BY:	DATE:	S-3
1			3			TOTAL SHEETS
2			4			20

DRAWN BY: J. LOFTUS DATE: 09-14
CHECKED BY: D. RUGGLES DATE: 09-14
DESIGN ENGINEER OF RECORD: J. LOFTUS DATE: 09-14

12/17/2015
...\400_003_17BP5R48_SMU_LRFR03.dgn
USER:jloftus

DocuSign Envelope ID: E9741AAC-7F54-4C29-8FAB-30EDB6ECE9EF

LOAD AND RESISTANCE FACTOR RATING (LRFD) SUMMARY FOR PRESTRESSED CONCRETE GIRDERS

LEVEL		VEHICLE	WEIGHT (W) (TONS)	CONTROLLING LOAD RATING	MINIMUM RATING FACTORS (RF)	TONS = W X RF	STRENGTH I LIMIT STATE											SERVICE III LIMIT STATE						COMMENT NUMBER
								MOMENT					SHEAR						MOMENT					
							LIVELOAD FACTORS	DISTRIBUTION FACTORS (DF)	RATING FACTOR	SPAN	GIRDER LOCATION	DISTANCE FROM LEFT END OF SPAN (ft)	DISTRIBUTION FACTORS (DF)	RATING FACTOR	SPAN	GIRDER LOCATION	DISTANCE FROM LEFT END OF SPAN (ft)	LIVELOAD FACTORS	DISTRIBUTION FACTORS (DF)	RATING FACTOR	SPAN	GIRDER LOCATION	DISTANCE FROM LEFT END OF SPAN (ft)	
DESIGN LOAD RATING		HL-93(Inv)	N/A	1	1.109	--	1.75	0.272	1.47	90'	EL	44.25	0.493	1.26	90'	EL	4.425	0.80	0.272	1.11	90'	EL	44.25	
		HL-93(Opr)	N/A	--	1.633	--	1.35	0.272	1.9	90'	EL	44.25	0.493	1.63	90'	EL	4.425	N/A	--	--	--	--	--	
		HS-20(Inv)	36.000	2	1.507	54.255	1.75	0.272	1.99	90'	EL	44.25	0.493	1.65	90'	EL	4.425	0.80	0.272	1.51	90'	EL	44.25	
		HS-20(Opr)	36.000	--	2.14	77.039	1.35	0.272	2.59	90'	EL	44.25	0.493	2.14	90'	EL	4.425	N/A	--	--	--	--	--	
LEGAL LOAD RATING	SV	SNSH	13.500	--	3.519	47.501	1.4	0.272	5.82	90'	EL	44.25	0.493	5.05	90'	EL	4.425	0.80	0.272	3.52	90'	EL	44.25	
		SNGARBS2	20.000	--	2.572	51.43	1.4	0.272	4.25	90'	EL	44.25	0.493	3.55	90'	EL	4.425	0.80	0.272	2.57	90'	EL	44.25	
		SNAGRIS2	22.000	--	2.415	53.122	1.4	0.272	4	90'	EL	44.25	0.493	3.27	90'	EL	4.425	0.80	0.272	2.41	90'	EL	44.25	
		SNCOTTS3	27.250	--	1.749	47.674	1.4	0.272	2.89	90'	EL	44.25	0.493	2.52	90'	EL	4.425	0.80	0.272	1.75	90'	EL	44.25	
		SNAGGRS4	34.925	--	1.443	50.381	1.4	0.272	2.39	90'	EL	44.25	0.493	2.06	90'	EL	4.425	0.80	0.272	1.44	90'	EL	44.25	
		SNS5A	35.550	--	1.412	50.195	1.4	0.272	2.34	90'	EL	44.25	0.493	2.07	90'	EL	4.425	0.80	0.272	1.41	90'	EL	44.25	
		SNS6A	39.950	--	1.287	51.435	1.4	0.272	2.13	90'	EL	44.25	0.493	1.88	90'	EL	4.425	0.80	0.272	1.29	90'	EL	44.25	
		SNS7B	42.000	--	1.226	51.483	1.4	0.272	2.03	90'	EL	44.25	0.493	1.83	90'	EL	4.425	0.80	0.272	1.23	90'	EL	44.25	
	TTST	TNAGRIT3	33.000	--	1.568	51.733	1.4	0.272	2.59	90'	EL	44.25	0.493	2.24	90'	EL	4.425	0.80	0.272	1.57	90'	EL	44.25	
		TNT4A	33.075	--	1.572	52.007	1.4	0.272	2.6	90'	EL	44.25	0.493	2.2	90'	EL	4.425	0.80	0.272	1.57	90'	EL	44.25	
		TNT6A	41.600	--	1.278	53.17	1.4	0.272	2.11	90'	EL	44.25	0.493	1.92	90'	EL	4.425	0.80	0.272	1.28	90'	EL	44.25	
		TNT7A	42.000	--	1.281	53.782	1.4	0.272	2.12	90'	EL	44.25	0.493	1.89	90'	EL	4.425	0.80	0.272	1.28	90'	EL	44.25	
		TNT7B	42.000	--	1.315	55.229	1.4	0.272	2.18	90'	EL	44.25	0.493	1.79	90'	EL	4.425	0.80	0.272	1.31	90'	EL	44.25	
		TNAGRIT4	43.000	--	1.258	54.101	1.4	0.272	2.08	90'	EL	44.25	0.493	1.74	90'	EL	4.425	0.80	0.272	1.26	90'	EL	44.25	
		TNAGT5A	45.000	--	1.19	53.537	1.4	0.272	1.97	90'	EL	44.25	0.493	1.71	90'	EL	4.425	0.80	0.272	1.19	90'	EL	44.25	
		TNAGT5B	45.000	3	1.178	53.027	1.4	0.272	1.95	90'	EL	44.25	0.493	1.66	90'	EL	4.425	0.80	0.272	1.18	90'	EL	44.25	

LOAD FACTORS:

	LIMIT STATE	γ_{DC}	γ_{DW}
DESIGN LOAD RATING FACTORS	STRENGTH I	1.25	1.50
	SERVICE III	1.00	1.00

NOTES:

MINIMUM RATING FACTORS ARE BASED ON THE STRENGTH I AND SERVICE III LIMIT STATES.

ALLOWABLE STRESSES FOR SERVICE III LIMIT STATE ARE AS REQUIRED FOR DESIGN.

CONTROLLING LOAD RATING

(1) DESIGN LOAD RATING (HL-93)

(2) DESIGN LOAD RATING (HS-20)

(3) LEGAL LOAD RATING **

** SEE CHART FOR VEHICLE TYPE

GIRDER LOCATION

I - INTERIOR GIRDER
EL - EXTERIOR LEFT GIRDER
ER - EXTERIOR RIGHT GIRDER

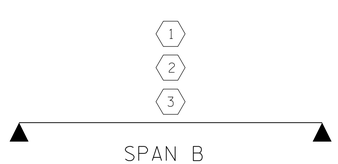

LRFR SUMMARY

FOR 90' SPAN

DocuSigned by: Jeff Loftus FE51DC02E67840... 2/26/2016

NORTH CAROLINA PROFESSIONAL SEAL 041425 ENGINEER JEFFREY M. LOFTUS

DOCUMENT NOT CONSIDERED FINAL UNLESS ALL SIGNATURES COMPLETED

STEWART

Firm License No. C-1051
421 Fayetteville St,
Suite 400
Raleigh, NC 27601
T 919.380.8750
www.stewartinc.com

PROJECT NO. 17BP.5.R.48

PERSON COUNTY

STATION: 16+30.50 -L-

SHEET 4 OF 4

STATE OF NORTH CAROLINA
DEPARTMENT OF TRANSPORTATION
RALEIGH

STANDARD

LRFR SUMMARY FOR 90' BOX BEAM UNIT 90° SKEW (NON-INTERSTATE TRAFFIC)

REVISIONS						SHEET NO.
NO.	BY:	DATE:	NO.	BY:	DATE:	S-4
1			3			TOTAL SHEETS
2			4			20

ASSEMBLED BY : J. LOFTUS DATE : 09-14
CHECKED BY : P. JACOB DATE : 09-14
DRAWN BY : TMG 11/11
CHECKED BY : AAC 11/11

12/17/2015
...\400_004_17BP5R48_SMU_LRFR04.dgn
USER:jloftus

STD. NO. 33LRFR1_90S_90L

DocuSign Envelope ID: E9741AAC-7F54-4C29-8FAB-30EDB6ECE9EF

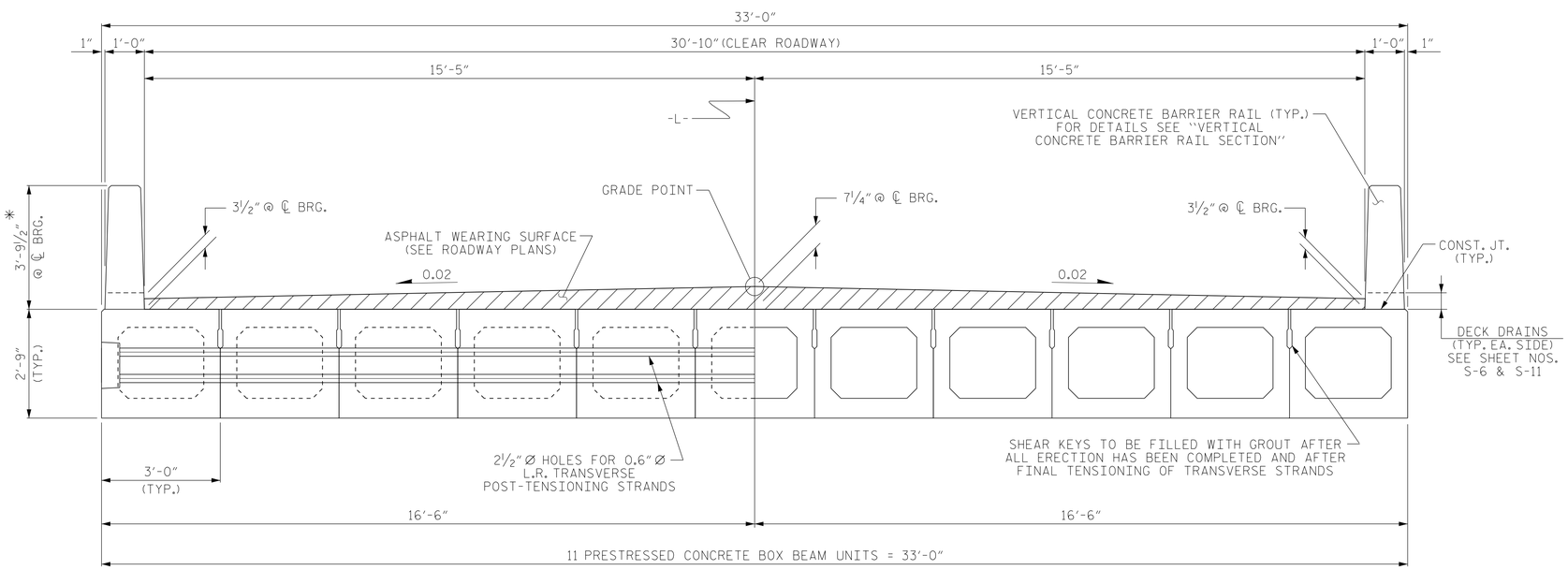

HALF SECTION
AT INTERMEDIATE DIAPHRAGMS

HALF SECTION
THROUGH VOIDS

TYPICAL SECTION

THE MAXIMUM BARRIER RAIL HEIGHT AND ASPHALT THICKNESS IS SHOWN. THE HEIGHT OF THE BARRIER RAIL AND ASPHALT THICKNESS VARIES WHILE THE TOP OF THE BARRIER RAIL FOLLOWS *THE PROFILE OF THE GUTTERLINE. FOR RAIL HEIGHT DETAILS AND ASPHALT THICKNESS, SEE THE "VERTICAL CONCRETE BARRIER RAIL SECTION" DETAIL.

FIXED END

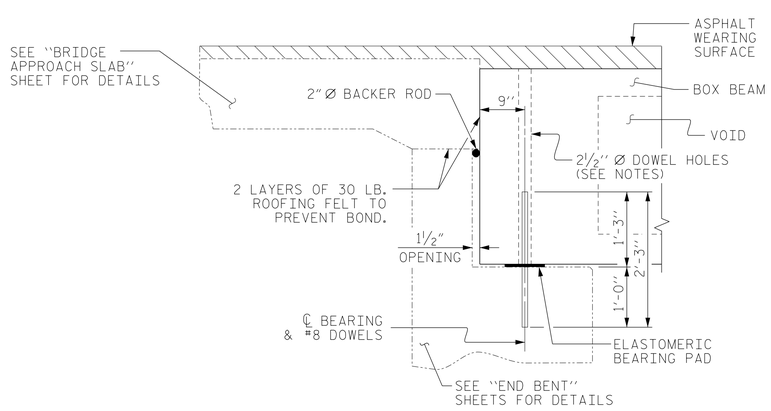

SECTION AT END BENT

FIXED END FIXED END

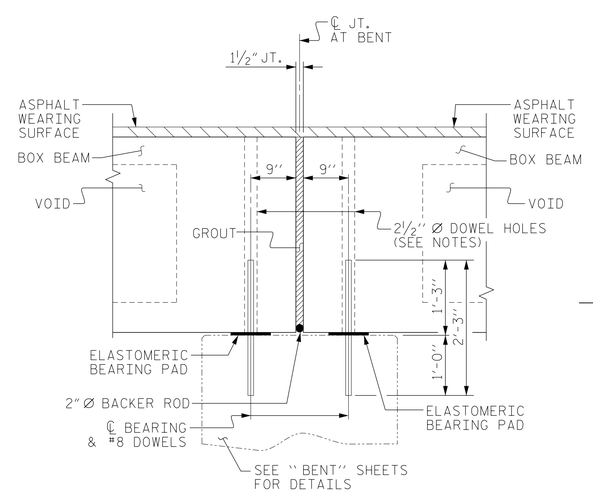

SECTION AT BENT

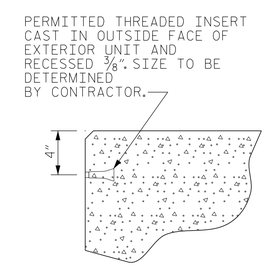

THREADED INSERT DETAIL

NOTES

ALL PRESTRESSING STRANDS SHALL BE 7-WIRE LOW RELAXATION GRADE 270 STRANDS AND SHALL CONFORM TO AASHTO M203 EXCEPT FOR SAMPLING REQUIREMENTS WHICH SHALL BE IN ACCORDANCE WITH THE STANDARD SPECIFICATIONS.

ALL REINFORCING STEEL CAST WITH THE BOX BEAM SECTIONS SHALL BE GRADE 60 AND SHALL BE INCLUDED IN THE UNIT PRICE BID FOR PRESTRESSED CONCRETE BOX BEAMS.

FLAME CUTTING OF THE TRANSVERSE POST-TENSIONING STRAND IS NOT ALLOWED.

RECESSES FOR TRANSVERSE STRANDS SHALL BE GROUTED AFTER THE TENSIONING OF THE STRANDS.

THE 2½" Ø DOWEL HOLES AT FIXED ENDS OF BOX BEAM SECTIONS SHALL BE FILLED WITH GROUT. THE 2½" Ø DOWEL HOLES AT EXPANSION ENDS OF BOX BEAM SECTIONS SHALL BE FILLED WITH JOINT SEALER MATERIAL TO 1½" ABOVE THE TOP OF DOWELS AND THEN FILLED WITH GROUT.

THE JOINT SEALER MATERIAL SHALL CONFORM TO THE REQUIREMENTS OF TYPE SL LOW MODULUS SILICONE SEALANT. THE 2" Ø BACKER ROD SHALL CONFORM TO THE REQUIREMENTS OF TYPE M BOND BREAKER. SEE SECTION 1028 OF THE STANDARD SPECIFICATIONS.

THE TRANSFER OF LOAD FROM THE ANCHORAGES TO THE BOX BEAM UNIT SHALL BE DONE WHEN THE CONCRETE HAS REACHED A COMPRESSIVE STRENGTH OF NOT LESS THAN 4000 PSI.

ALL REINFORCING STEEL IN BARRIER RAILS SHALL BE EPOXY COATED.

PRESTRESSING STRANDS SHALL BE CUT FLUSH WITH THE BOX BEAM UNIT ENDS.

APPLY EPOXY PROTECTIVE COATING TO BOX BEAM UNIT ENDS.

VERTICAL GROOVED CONTRACTION JOINTS, ½" IN DEPTH, SHALL BE TOOLED IN ALL EXPOSED FACES OF THE BARRIER RAIL AND IN ACCORDANCE WITH ARTICLE 825-10(B) OF THE STANDARD SPECIFICATIONS. A VERTICAL CONTRACTION JOINT SHALL BE LOCATED AT EACH THIRD POINT BETWEEN BARRIER RAIL EXPANSION JOINTS. ONLY ONE CONTRACTION JOINT IS REQUIRED AT MIDPOINT OF BARRIER RAIL SEGMENTS LESS THAN 20 FEET IN LENGTH AND NO CONTRACTION JOINTS ARE REQUIRED FOR THOSE SEGMENTS LESS THAN 10 FEET IN LENGTH.

THE LOCATION OF THE VOID DRAINS MAY BE SHIFTED SLIGHTLY WHERE NECESSARY TO CLEAR PRESTRESSING STRANDS OR TRANSVERSE REINFORCING STEEL.

THE PERMITTED BOLTS, WASHERS AND THREADED INSERTS IN THE EXTERIOR UNITS SHALL BE GALVANIZED IN ACCORDANCE WITH SECTION 1076 OF THE STANDARD SPECIFICATIONS.

THE PERMITTED BOLTS, WASHERS AND THREADED INSERTS ARE DETAILED AS AN OPTION FOR THE CONTRACTOR TO ATTACH FALSEWORK AND FORMWORK DURING CONSTRUCTION.

THE PERMITTED BOLTS AND WASHERS SHALL BE REMOVED AND THE THREADED INSERTS GROUTED BY THE CONTRACTOR IMMEDIATELY FOLLOWING REMOVAL OF THE FALSEWORK.

THE COST OF THE PERMITTED BOLTS, WASHERS AND THREADED INSERTS SHALL BE INCLUDED IN THE PRICE BID FOR THE PRECAST UNITS.

APPLY EPOXY PROTECTIVE COATING TO EXTERIOR FACE OF THE EXTERIOR BOX BEAM UNITS THAT REQUIRE DRAINS IN THE BARRIER RAIL.

PROJECT NO. 17BP.5.R.48
PERSON COUNTY
STATION: 16+30.50 -L-

SHEET 1 OF 8

DocuSigned by: Jeff Loftus
FE51DC02E6794A0...
2/26/2016

NORTH CAROLINA PROFESSIONAL SEAL 041425 ENGINEER JEFFREY M. LOFTUS

DOCUMENT NOT CONSIDERED FINAL UNLESS ALL SIGNATURES COMPLETED

STEWART
Firm License No. C-1051
421 Fayetteville St,
Suite 400
Raleigh, NC 27601
T 919.380.8750
www.stewartinc.com

STATE OF NORTH CAROLINA
DEPARTMENT OF TRANSPORTATION
RALEIGH

3'-0" X 2'-9"
PRESTRESSED CONCRETE
BOX BEAM UNIT

REVISIONS						SHEET NO.
NO.	BY:	DATE:	NO.	BY:	DATE:	S-5
1			3			TOTAL SHEETS
2			4			20

DRAWN BY:	J. LOFTUS	DATE : 09-14
CHECKED BY:	D. RUGGLES	DATE : 09-14
DESIGN ENGINEER OF RECORD:	J. LOFTUS	DATE : 09-14

12/17/2015
...\400_005_17BP5R48_SMU_TS01.dgn
USER:jloftus

DocuSign Envelope ID: E9741AAC-7F54-4C29-8FAB-30EDB6ECE9EF

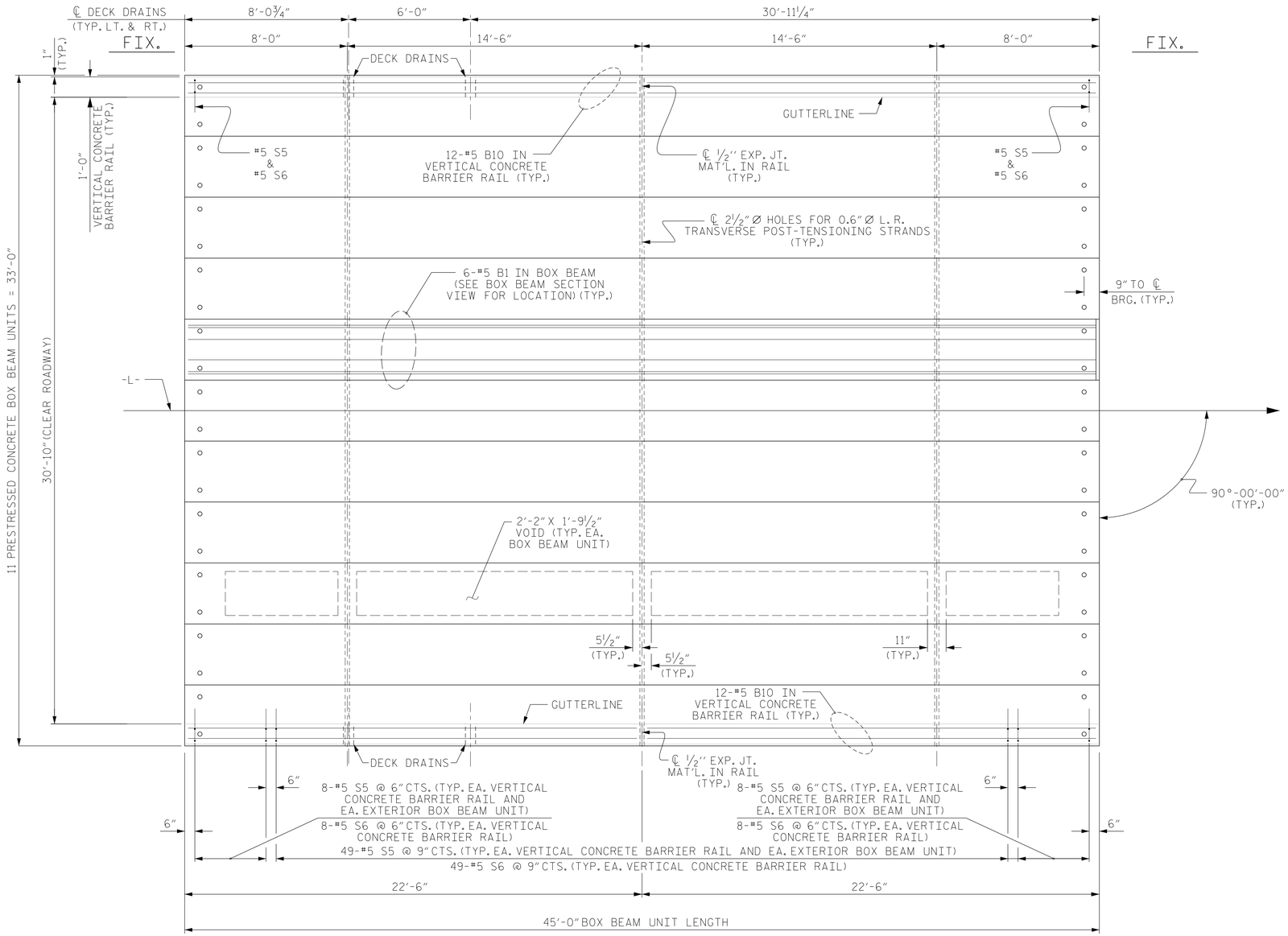

PLAN OF UNIT

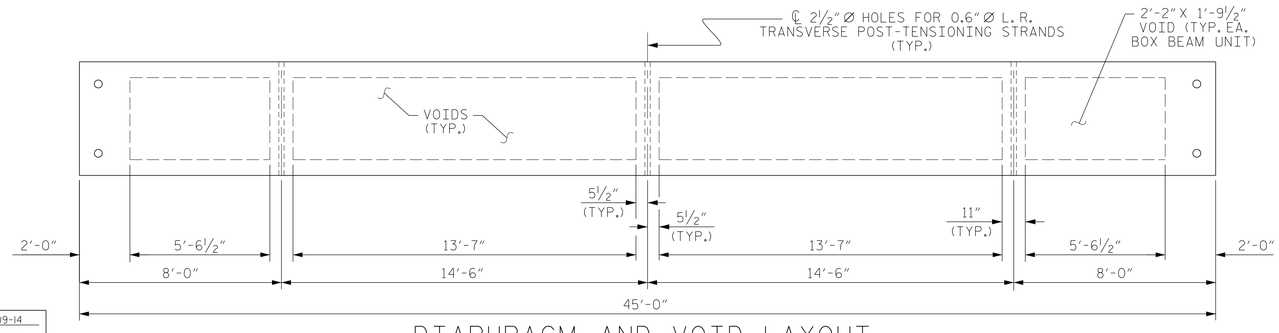

DIAPHRAGM AND VOID LAYOUT

DRAWN BY:	J. LOFTUS	DATE :	09-14
CHECKED BY:	D. RUGGLES	DATE :	09-14
DESIGN ENGINEER OF RECORD:	J. LOFTUS	DATE :	09-14

12/17/2015
...\400_006_17BP5R48_SMU_SP02.dgn
USER:jloftus

DocuSigned by: Jeff Loftus FE51DC02E6794A5... 2/26/2016

NORTH CAROLINA PROFESSIONAL SEAL 041425 ENGINEER JEFFREY M. LOFTUS

DOCUMENT NOT CONSIDERED FINAL UNLESS ALL SIGNATURES COMPLETED

STEWART
Firm License No. C-1051
421 Fayetteville St,
Suite 400
Raleigh, NC 27601
T 919.380.8750
www.stewartinc.com

PROJECT NO. 17BP.5.R.48
PERSON COUNTY
STATION: 16+30.50 -L-

SHEET 2 OF 8

STATE OF NORTH CAROLINA
DEPARTMENT OF TRANSPORTATION
RALEIGH

PLAN OF 45' UNIT
30'-10" CLEAR ROADWAY
90° SKEW

REVISIONS						SHEET NO.
NO.	BY:	DATE:	NO.	BY:	DATE:	S-6
1			3			TOTAL SHEETS
2			4			20

DocuSign Envelope ID: E9741AAC-7F54-4C29-8FAB-30EDB6ECE9EF

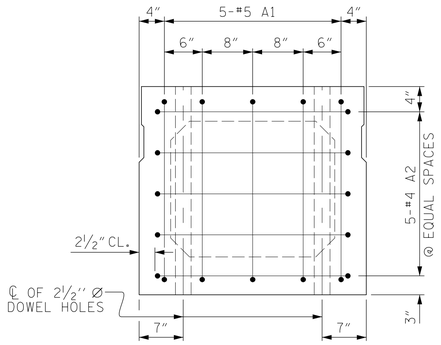

END ELEVATION

SHOWING PLACEMENT OF #5 & #4 "A" BARS AND LOCATION OF DOWEL HOLES. (INTERIOR BOX BEAM SECTION SHOWN-EXTERIOR SECTION SIMILAR EXCEPT SHEAR KEY LOCATION. STRAND LAYOUT NOT SHOWN.)

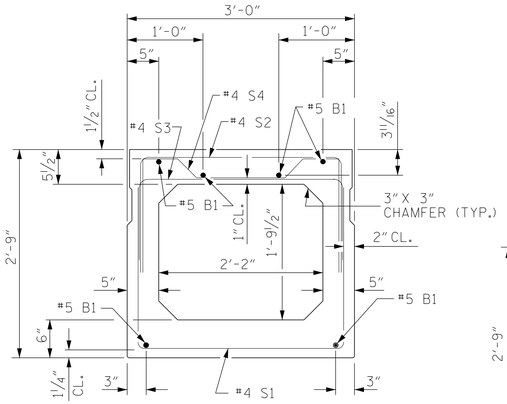

INTERIOR BOX BEAM SECTION

(STRAND LAYOUT NOT SHOWN)

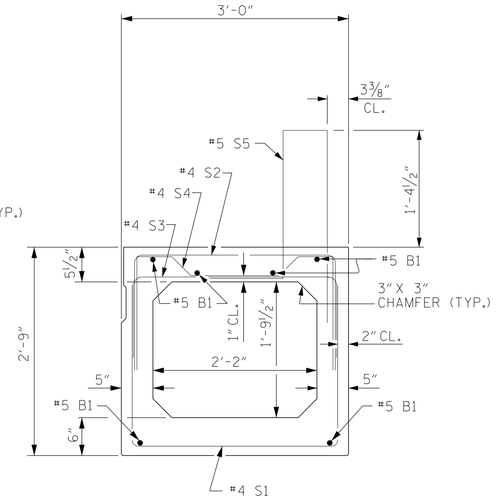

EXTERIOR BOX BEAM SECTION

(STRAND LAYOUT NOT SHOWN)

0.6" Ø LOW RELAXATION STRAND LAYOUT

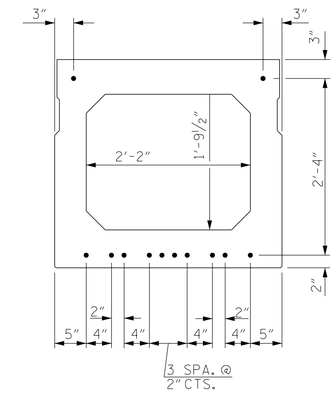

TYPICAL STRAND LOCATION

(12 STRANDS REQUIRED)

DEBONDING LEGEND

● FULLY BONDED STRANDS

BAR TYPES

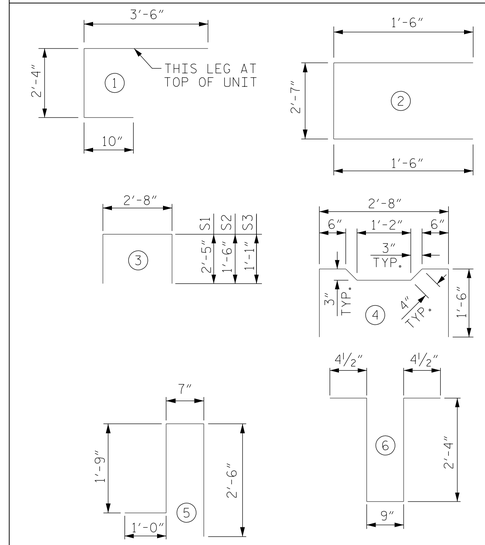

ALL BAR DIMENSIONS ARE OUT TO OUT

BILL OF MATERIAL FOR ONE BOX BEAM SECTION

				EXTERIOR UNIT		INTERIOR UNIT	
BAR	NUMBER	SIZE	TYPE	LENGTH	WEIGHT	LENGTH	WEIGHT
A1	10	#5	1	6'-8"	70	6'-8"	70
A2	28	#4	2	5'-7"	104	5'-7"	104
B1	6	#5	STR	44'-8"	280	44'-8"	280
K1	9	#4	6	6'-2"	37	6'-2"	37
K2	6	#4	STR	2'-7"	10	2'-7"	10
S1	43	#4	3	7'-6"	215	7'-6"	215
S2	43	#4	3	5'-8"	163	5'-8"	163
S3	67	#4	3	4'-10"	216	4'-10"	216
S4	24	#4	4	5'-10"	94	5'-10"	94
✳ S5	65	#5	5	5'-10"	395	--	--
REINFORCING STEEL				1189	LBS.	1189	LBS.
✳ EPOXY COATED REINF. STEEL				395	LBS.		
5000 P.S.I. CONCRETE				8.4	CU. YDS.	8.3	CU. YDS.
0.6" Ø L.R. STRANDS				No. 12		No. 12	

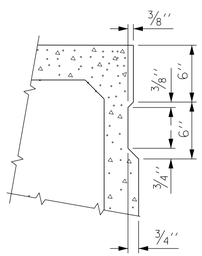

SHEAR KEY DETAIL

NOTE: OMIT SHEAR KEY ON OUTSIDE FACE OF EXTERIOR BOX BEAMS.

GRADE 270 STRANDS	
	0.6" Ø L.R.
AREA (SQUARE INCHES)	0.217
ULTIMATE STRENGTH (LBS. PER STRAND)	58,600
APPLIED PRESTRESS (LBS. PER STRAND)	43,950

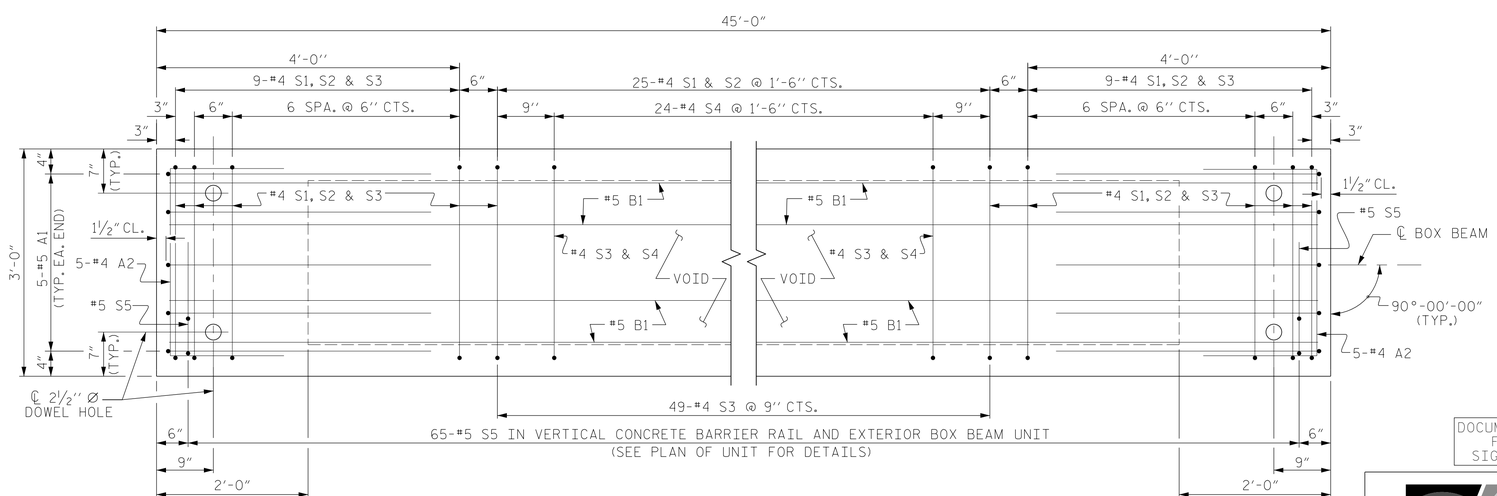

PLAN OF BOX BEAM

EXTERIOR UNIT SHOWN, INTERIOR UNIT SIMILAR EXCEPT OMIT #5 S5 BARS.
FOR LOCATION OF DIAPHRAGMS, SEE "PLAN OF UNIT".
FOR THREADED INSERTS, SEE "THREADED INSERT DETAIL".
FOR REINFORCING STEEL IN DIAPHRAGMS, SEE "DOUBLE DIAPHRAGM DETAILS".

DocuSigned by: Jeff Loftus FE51DC02E67040... 2/26/2016

NORTH CAROLINA PROFESSIONAL SEAL 041425 ENGINEER JEFFREY M. LOFTUS

DOCUMENT NOT CONSIDERED FINAL UNLESS ALL SIGNATURES COMPLETED

STEWART
Firm License No. C-1051
421 Fayetteville St,
Suite 400
Raleigh, NC 27601
T 919.380.8750
www.stewartinc.com

PROJECT NO. 17BP.5.R.48
PERSON COUNTY
STATION: 16+30.50 -L-

SHEET 3 OF 8

STATE OF NORTH CAROLINA
DEPARTMENT OF TRANSPORTATION
RALEIGH

45' UNIT 3'-0" X 2'-9" PRESTRESSED CONCRETE BOX BEAM UNIT

REVISIONS						SHEET NO.
NO.	BY:	DATE:	NO.	BY:	DATE:	S-7
1			3			TOTAL SHEETS
2			4			20

DRAWN BY:	J. LOFTUS	DATE :	09-14
CHECKED BY:	D. RUGGLES	DATE :	09-14
DESIGN ENGINEER OF RECORD:	J. LOFTUS	DATE :	09-14

12/17/2015
...\400_007_17BP5R48_SMU_SP03.dgn
USER:jloftus

DocuSign Envelope ID: E9741AAC-7F54-4C29-8FAB-30EDB6ECE9EF

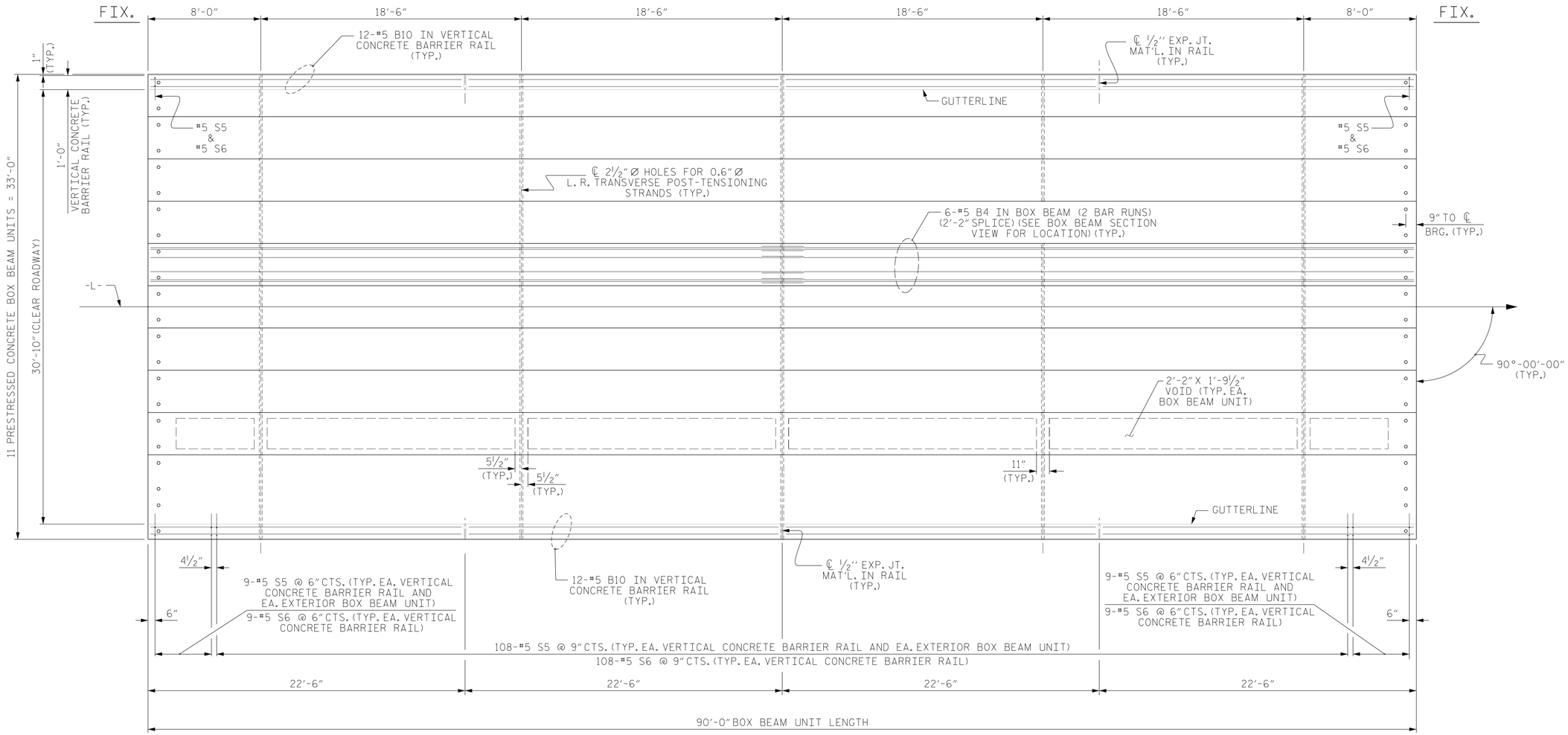

PLAN OF UNIT

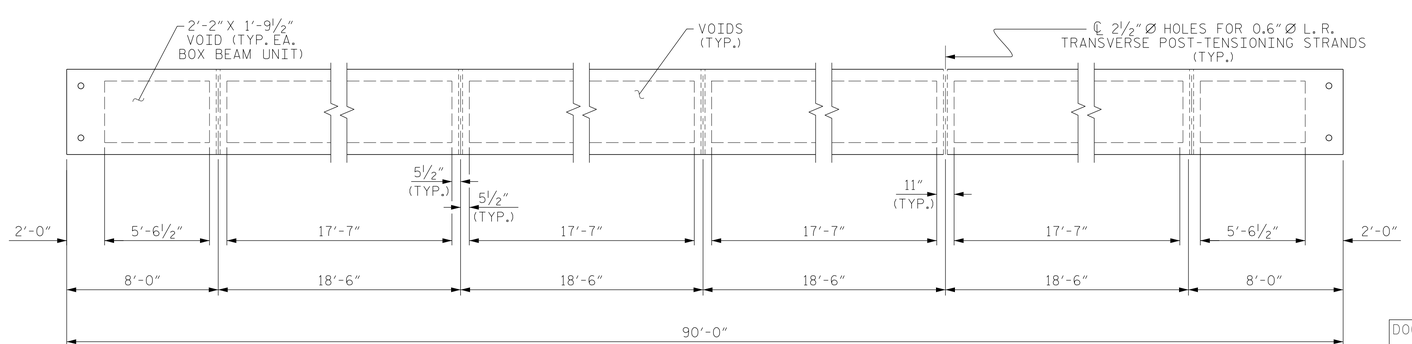

DIAPHRAGM AND VOID LAYOUT

DocuSigned by: Jeff Loftus FE51DC02E6784A0... 2/26/2016

NORTH CAROLINA PROFESSIONAL SEAL 041425 ENGINEER JEFFREY M. LOFTUS

DOCUMENT NOT CONSIDERED FINAL UNLESS ALL SIGNATURES COMPLETED

PROJECT NO. 17BP.5.R.48

PERSON COUNTY

STATION: 16+30.50 -L-

SHEET 4 OF 8

STATE OF NORTH CAROLINA
DEPARTMENT OF TRANSPORTATION
RALEIGH

PLAN OF 90' UNIT 30'-10" CLEAR ROADWAY 90° SKEW

STEWART
Firm License No. C-1051
421 Fayetteville St,
Suite 400
Raleigh, NC 27601
T 919.380.8750
www.stewartinc.com

REVISIONS						SHEET NO.
NO.	BY:	DATE:	NO.	BY:	DATE:	S-8
1			3			TOTAL SHEETS
2			4			20

ASSEMBLED BY : J. LOFTUS		DATE :	09-14
CHECKED BY : D. RUGGLES		DATE :	09-14
DRAWN BY : DGE	8/10	REV. 8/14	MAA/TMG
CHECKED BY : TMG	11/11		

12/17/2015
...\400_008_17BP5R48_SMU_SP04.dgn
USER:jloftus

STD.NO.33PCBB_33_90S_90L

DocuSign Envelope ID: E9741AAC-7F54-4C29-8FAB-30EDB6ECE9EF

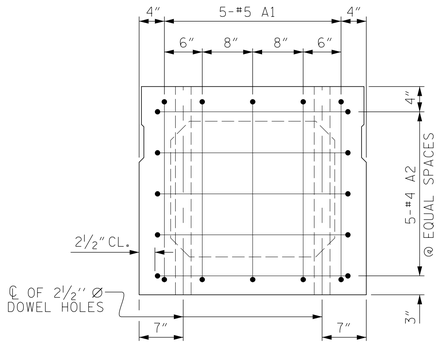

END ELEVATION

SHOWING PLACEMENT OF #5 & #4 "A" BARS AND LOCATION OF DOWEL HOLES. (INTERIOR BOX BEAM SECTION SHOWN-EXTERIOR SECTION SIMILAR EXCEPT SHEAR KEY LOCATION. STRAND LAYOUT NOT SHOWN.)

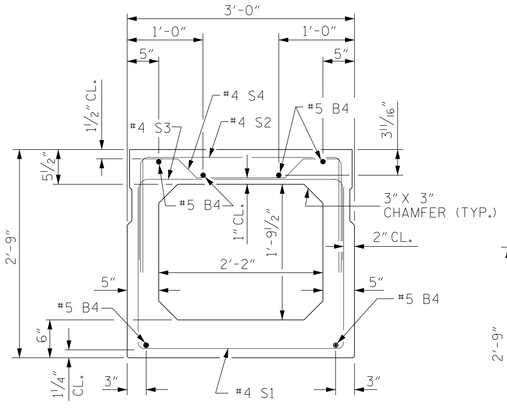

INTERIOR BOX BEAM SECTION

(STRAND LAYOUT NOT SHOWN)

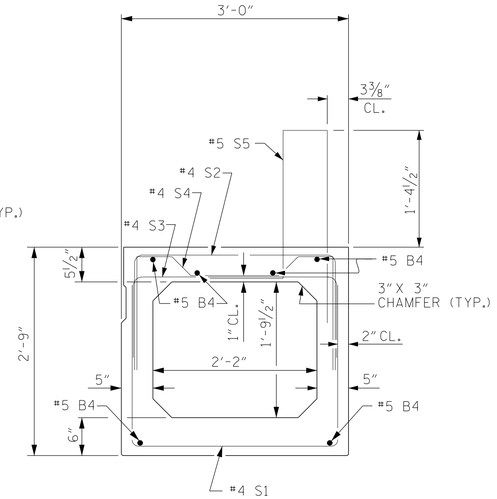

EXTERIOR BOX BEAM SECTION

(STRAND LAYOUT NOT SHOWN)

0.6" Ø LOW RELAXATION STRAND LAYOUT

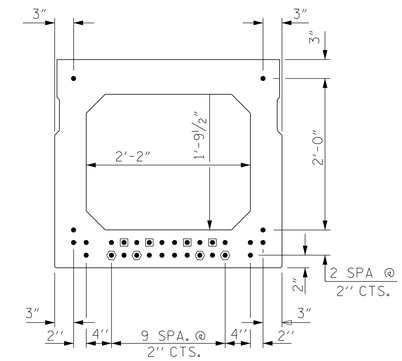

TYPICAL STRAND LOCATION

(30 STRANDS REQUIRED)

DEBONDING LEGEND

- ● FULLY BONDED STRANDS
- ◉ STRANDS DEBONDED FOR 4'-0" FROM END OF GIRDER
- ⬢ STRANDS DEBONDED FOR 12'-0" FROM END OF GIRDER

BOND SHALL BE BROKEN ON STRANDS AS SHOWN FOR THE SPECIFIED LENGTH FROM EACH END OF THE BOX BEAM. SEE STANDARD SPECIFICATIONS ARTICLE 1078-7.

BAR TYPES

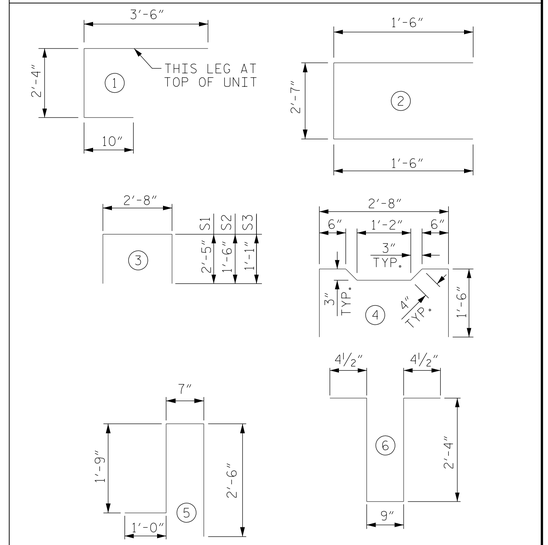

ALL BAR DIMENSIONS ARE OUT TO OUT

BILL OF MATERIAL FOR ONE BOX BEAM SECTION

				EXTERIOR UNIT		INTERIOR UNIT	
BAR	NUMBER	SIZE	TYPE	LENGTH	WEIGHT	LENGTH	WEIGHT
A1	10	#5	1	6'-8"	70	6'-8"	70
A2	40	#4	2	5'-7"	149	5'-7"	149
B4	12	#5	STR	45'-11"	575	45'-11"	575
K1	15	#4	6	6'-2"	62	6'-2"	62
K2	10	#4	STR	2'-7"	17	2'-7"	17
S1	73	#4	3	7'-6"	366	7'-6"	366
S2	73	#4	3	5'-8"	276	5'-8"	276
S3	127	#4	3	4'-10"	410	4'-10"	410
S4	54	#4	4	5'-10"	210	5'-10"	210
✳ S5	126	#5	5	5'-10"	767	--	--
REINFORCING STEEL				2135	LBS.	2135	LBS.
✳ EPOXY COATED REINF. STEEL				767	LBS.		
8000 P.S.I. CONCRETE				16.0	CU. YDS.	15.9	CU. YDS.
0.6" Ø L.R. STRANDS				No. 30		No. 30	

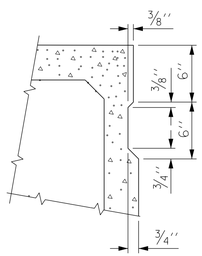

SHEAR KEY DETAIL

NOTE: OMIT SHEAR KEY ON OUTSIDE FACE OF EXTERIOR BOX BEAMS.

GRADE 270 STRANDS	
	0.6" Ø L.R.
AREA (SQUARE INCHES)	0.217
ULTIMATE STRENGTH (LBS. PER STRAND)	58,600
APPLIED PRESTRESS (LBS. PER STRAND)	43,950

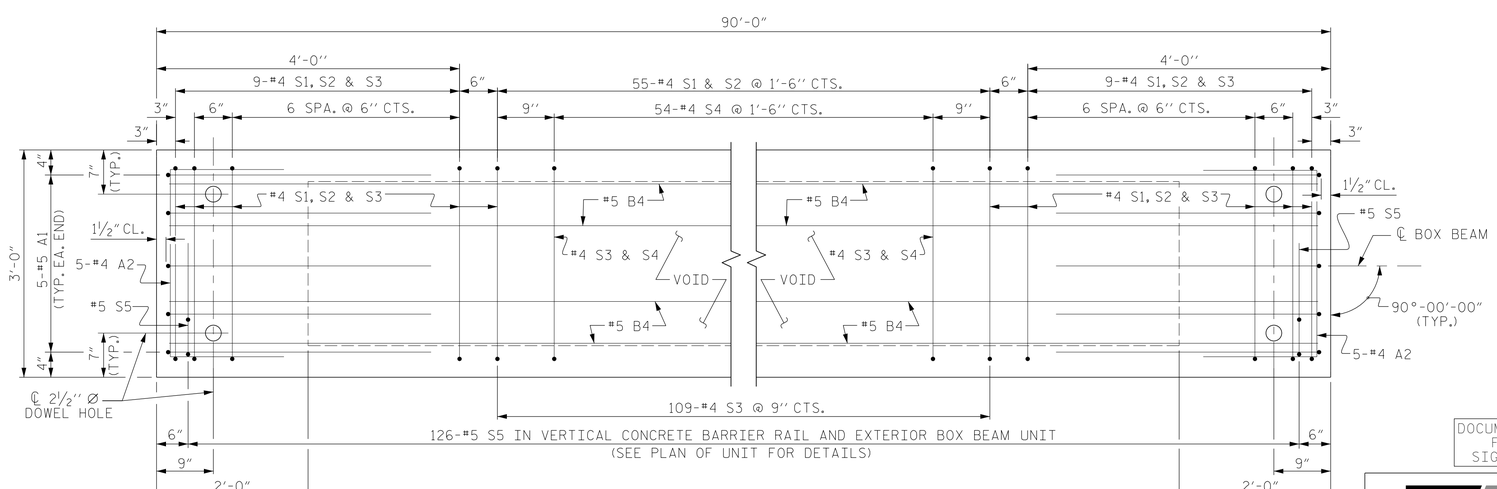

PLAN OF BOX BEAM

EXTERIOR UNIT SHOWN, INTERIOR UNIT SIMILAR EXCEPT OMIT #5 S5 BARS.
FOR LOCATION OF DIAPHRAGMS, SEE "PLAN OF UNIT".
FOR THREADED INSERTS, SEE "THREADED INSERT DETAIL".
FOR REINFORCING STEEL IN DIAPHRAGMS, SEE "DOUBLE DIAPHRAGM DETAILS".

DocuSigned by: Jeff Loftus FE51DC02E67040... 2/26/2016

NORTH CAROLINA PROFESSIONAL SEAL 041425 ENGINEER JEFFREY M. LOFTUS

DOCUMENT NOT CONSIDERED FINAL UNLESS ALL SIGNATURES COMPLETED

STEWART
Firm License No. C-1051
421 Fayetteville St,
Suite 400
Raleigh, NC 27601
T 919.380.8750
www.stewartinc.com

PROJECT NO. 17BP.5.R.48
PERSON COUNTY
STATION: 16+30.50 -L-

SHEET 5 OF 8

STATE OF NORTH CAROLINA
DEPARTMENT OF TRANSPORTATION
RALEIGH

STANDARD
90' UNIT
3'-0" X 2'-9"
PRESTRESSED CONCRETE
BOX BEAM UNIT

REVISIONS								SHEET NO.
NO.	BY:	DATE:	NO.	BY:	DATE:			S-9
1			3					TOTAL SHEETS
2			4					20

ASSEMBLED BY : J. LOFTUS DATE : 09-14
CHECKED BY : D. RUGGLES DATE : 09-14
DRAWN BY : DGE 10/11
CHECKED BY : TMG 11/11
REV. 8/14 MAA/TMG

12/17/2015
...\400_009_17BP5R48_SMU_SP05.dgn
USER: jloftus

STD. NO. 33PCBB4_90S_90L

DocuSign Envelope ID: E9741AAC-7F54-4C29-8FAB-30EDB6ECE9EF

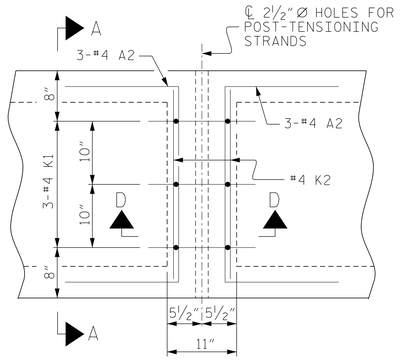

PLAN

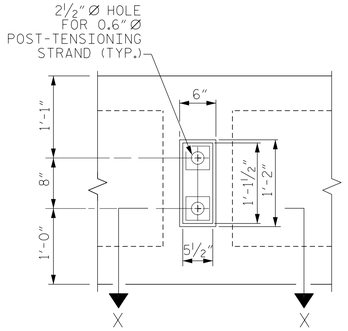

VIEW Y-Y

SHOWING ELEVATION VIEW OF GROUTED RECESS

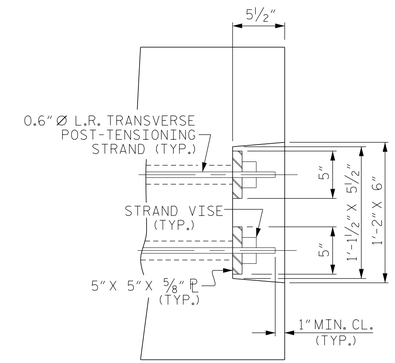

DETAIL "C"

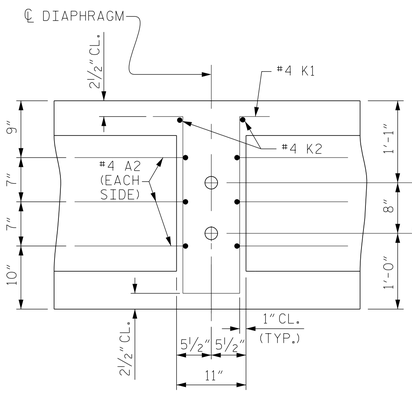

SECTION D-D

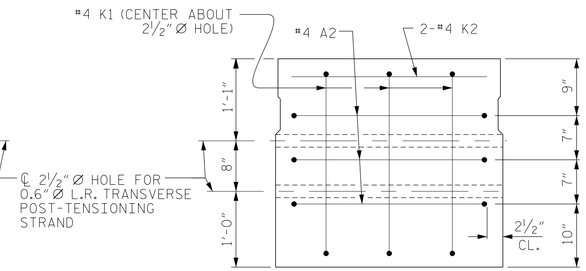

SECTION A-A

VOIDS NOT SHOWN

DOUBLE DIAPHRAGM DETAILS

#4 "S" BARS NOT SHOWN. #4 "S" BARS MAY BE SHIFTED SLIGHTLY TO CLEAR 2½" Ø HOLE.

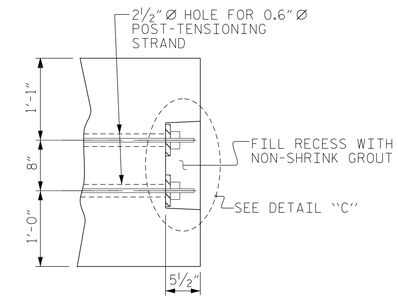

PART SECTION AT RECESS

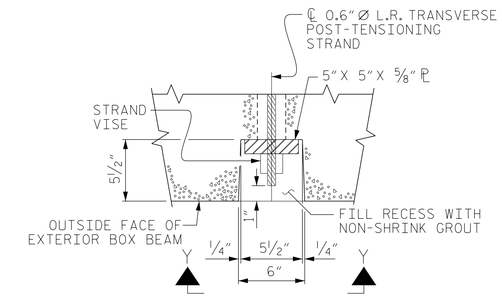

SECTION X-X

SHOWING PLAN VIEW OF GROUTED RECESS

GROUTED RECESS DETAIL AT END OF POST-TENSIONED STRANDS OF EXTERIOR BOX BEAM

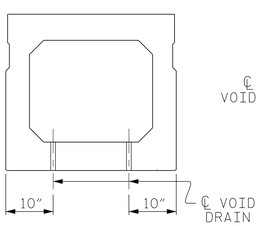

SECTION B-B

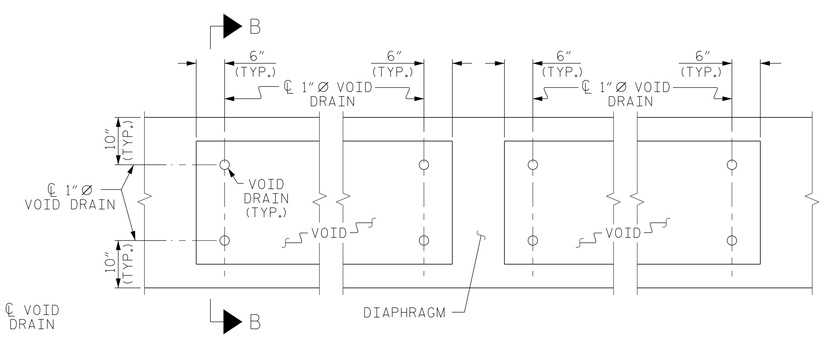

PART PLAN

VOID DRAIN DETAILS

(DIMENSIONS SHOWN ARE TYPICAL FOR EACH VOID)

DEAD LOAD DEFLECTION AND CAMBER	
	3'-0" x 2'-9"
90' BOX BEAM UNIT (NC)	0.6"Ø L.R. STRAND
CAMBER (SLAB ALONE IN PLACE)	2 11/16" ↑
DEFLECTION DUE TO SUPERIMPOSED DEAD LOAD**	1⅛" ↓
FINAL CAMBER	1 9/16" ↑

** INCLUDES FUTURE WEARING SURFACE

DEAD LOAD DEFLECTION AND CAMBER	
	3'-0" x 2'-9"
45' BOX BEAM UNIT (NC)	0.6"Ø L.R. STRAND
CAMBER (SLAB ALONE IN PLACE)	½" ↑
DEFLECTION DUE TO SUPERIMPOSED DEAD LOAD**	1/16" ↓
FINAL CAMBER	7/16" ↑

** INCLUDES FUTURE WEARING SURFACE

DocuSigned by: Jeff Loftus FE51DC02E8784B... 2/26/2016

NORTH CAROLINA PROFESSIONAL SEAL 041425 ENGINEER JEFFREY M. LOFTUS

DOCUMENT NOT CONSIDERED FINAL UNLESS ALL SIGNATURES COMPLETED

PROJECT NO. 17BP.5.R.48

PERSON COUNTY

STATION: 16+30.50 -L-

SHEET 6 OF 8

STATE OF NORTH CAROLINA
DEPARTMENT OF TRANSPORTATION
RALEIGH

STANDARD

3'-0" X 2'-9"
PRESTRESSED CONCRETE
BOX BEAM UNIT

STEWART
Firm License No. C-1051
421 Fayetteville St,
Suite 400
Raleigh, NC 27601
T 919.380.8750
www.stewartinc.com

REVISIONS						SHEET NO.
NO.	BY:	DATE:	NO.	BY:	DATE:	S-10
1			3			TOTAL SHEETS
2			4			20

ASSEMBLED BY : J. LOFTUS		DATE :	09-14
CHECKED BY : D. RUGGLES		DATE :	09-14
DRAWN BY : DGE	10/11	REV. 8/14	MAA/TMG
CHECKED BY : TMG	11/11		

12/17/2015
...\400.010.17BP5R48_SMU_SP06.dgn
USER:jloftus

STD.NO.33PCBB5_90S

DocuSign Envelope ID: E9741AAC-7F54-4C29-8FAB-30EDB6ECE9EF

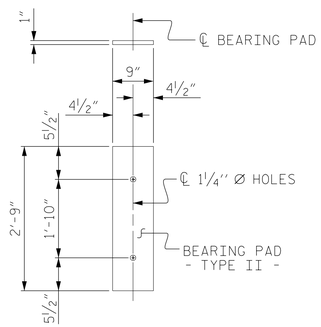

FIXED END
(TYPE II - 44 REQ'D)

ELASTOMERIC BEARING DETAILS

ELASTOMER IN ALL BEARINGS SHALL BE 60 DUROMETER HARDNESS.

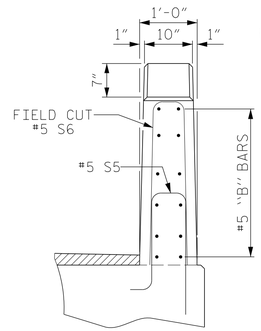

END VIEW

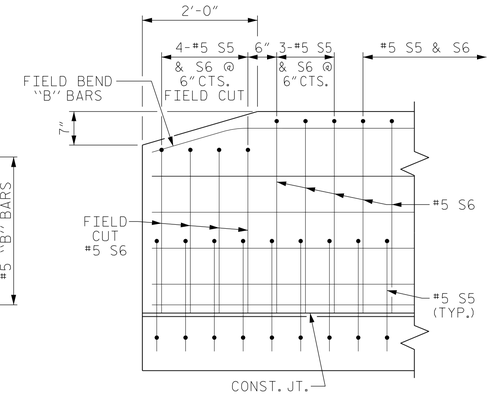

SIDE VIEW

END OF RAIL DETAILS

BOX BEAM UNITS REQUIRED			
	NUMBER	LENGTH	TOTAL LENGTH
45' UNIT			
EXTERIOR B.B.	2	45'-0"	90'-0"
INTERIOR B.B.	9	45'-0"	405'-0"
TOTAL	11	———	495'-0"
90' UNIT			
EXTERIOR B.B.	2	90'-0"	180'-0"
INTERIOR B.B.	9	90'-0"	810'-0"
TOTAL	11	———	990'-0"

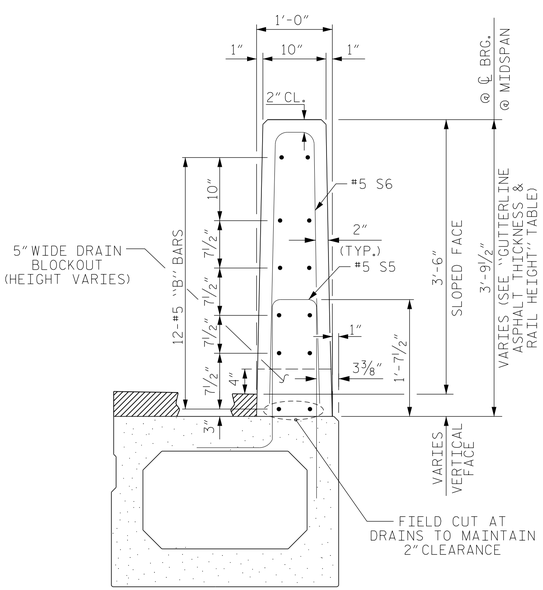

SECTION THRU RAIL

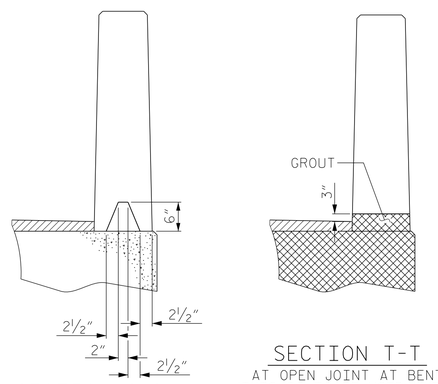

SECTION S-S
AT DAM IN OPEN JOINT
(THIS IS TO BE USED ONLY WHEN SLIP FORM IS USED)

SECTION T-T
AT OPEN JOINT AT BENT
(THIS IS TO BE USED WHERE FOAM JOINT IS NOT USED)

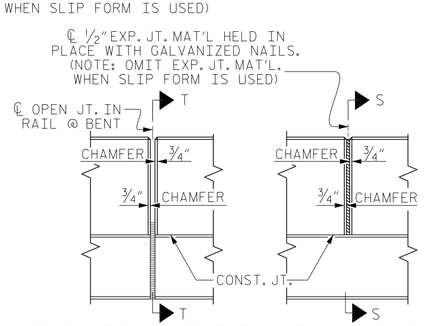

ELEVATION AT EXPANSION JOINTS

VERTICAL CONCRETE BARRIER RAIL DETAILS

NOTE: THE DRAIN OPENING AT THE GUTTERLINE SHALL BE 4" X 5". THE HEIGHT OF THE BLOCKOUT IN THE VERTICAL CONCRETE BARRIER RAIL SHALL EXTEND FROM THE TOP OF THE BOX BEAM UNIT TO THE TOP OF THE DRAIN OPENING.

BILL OF MATERIAL FOR VERTICAL CONCRETE BARRIER RAIL					
BAR	BARS PER PAIR OF EXTERIOR UNITS	SIZE	TYPE	LENGTH	WEIGHT
	45' UNIT				
✳B10	48	#5	STR	22'-1"	1106
✳ S6	130	#5	1	7'-2"	972
✳EPOXY COATED REINFORCING STEEL			LBS.		2078
CLASS AA CONCRETE			CU.YDS.		11.7
TOTAL VERTICAL CONCRETE BARRIER RAIL			LN. FT.		90.125
BAR	BARS PER PAIR OF EXTERIOR UNITS	SIZE	TYPE	LENGTH	WEIGHT
	90' UNIT				
✳B10	96	#5	STR	22'-1"	2211
✳ S6	252	#5	1	7'-2"	1884
✳EPOXY COATED REINFORCING STEEL			LBS.		4095
CLASS AA CONCRETE			CU.YDS.		23.3
TOTAL VERTICAL CONCRETE BARRIER RAIL			LN. FT.		180.125

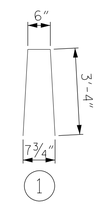

BAR TYPE
BAR DIMENSIONS ARE OUT TO OUT

GUTTERLINE ASPHALT THICKNESS & RAIL HEIGHT		
	ASPHALT OVERLAY THICKNESS @ MID-SPAN	RAIL HEIGHT @ MID-SPAN
45' UNITS	3 1/16"	3'-9 1/16"
90' UNITS	1½"	3'-7½"

DocuSigned by: Jeff Loftus
FE51DC02E6794A9...
2/26/2016

NORTH CAROLINA PROFESSIONAL SEAL 041425 ENGINEER JEFFREY M. LOFTUS

DOCUMENT NOT CONSIDERED FINAL UNLESS ALL SIGNATURES COMPLETED

STEWART
Firm License No. C-1051
421 Fayetteville St,
Suite 400
Raleigh, NC 27601
T 919.380.8750
www.stewartinc.com

PROJECT NO. 17BP.5.R.48
PERSON COUNTY
STATION: 16+30.50 -L-
SHEET 7 OF 8

STATE OF NORTH CAROLINA
DEPARTMENT OF TRANSPORTATION
RALEIGH
STANDARD
3'-0" X 2'-9"
PRESTRESSED CONCRETE
BOX BEAM UNIT

REVISIONS						SHEET NO.
NO.	BY:	DATE:	NO.	BY:	DATE:	S-11
1			3			TOTAL SHEETS
2			4			20

ASSEMBLED BY : J. LOFTUS DATE : 09-14
CHECKED BY : D. RUGGLES DATE : 09-14
DRAWN BY : DGE 10/11
CHECKED BY : TMG 11/11
REV. 8/14 MAA/TMG

12/17/2015
...\400_011.17BP5R48_SMU_BR07.dgn
USER:jloftus

STD. NO. 33PCBB8_90S

DocuSign Envelope ID: E9741AAC-7F54-4C29-8FAB-30EDB6ECE9EF

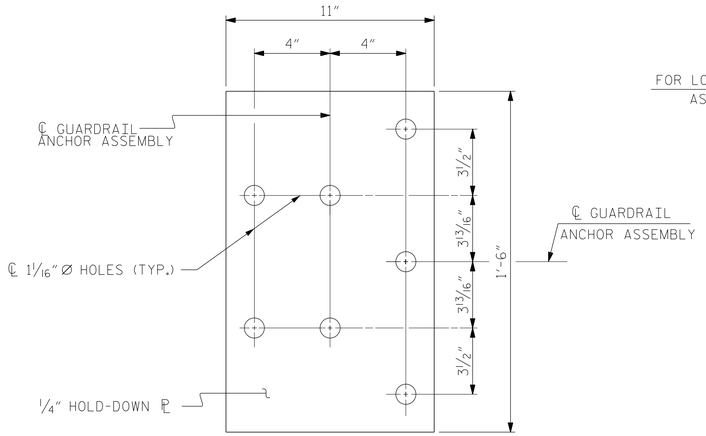

PLAN

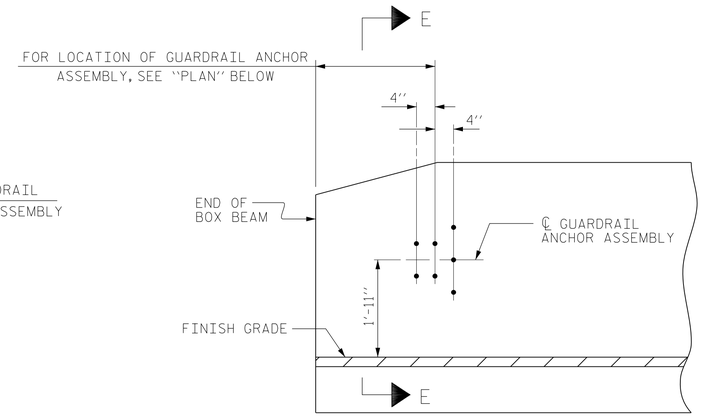

ELEVATION

NOTES

THE GUARDRAIL ANCHOR ASSEMBLY SHALL CONSIST OF A 1/4" HOLD DOWN PLATE AND 7 - 7/8" Ø BOLTS WITH NUTS AND WASHERS.

THE HOLD-DOWN PLATE SHALL CONFORM TO AASHTO M270 GRADE 36. AFTER FABRICATION, THE HOLD-DOWN PLATE SHALL BE HOT-DIP GALVANIZED IN ACCORDANCE WITH AASHTO M111.

BOLTS SHALL CONFORM TO THE REQUIREMENTS OF ASTM A307 AND NUTS SHALL CONFORM TO THE REQUIREMENTS OF AASHTO M291. BOLTS, NUTS AND WASHERS SHALL BE GALVANIZED. (AT THE CONTRACTOR'S OPTION, STAINLESS STEEL BOLTS, NUTS AND WASHERS MAY BE USED AS AN ALTERNATE FOR THE 7/8" Ø GALVANIZED BOLTS, NUTS AND WASHERS. THEY SHALL CONFORM TO OR EXCEED THE MECHANICAL REQUIREMENTS OF ASTM A307. THE USE OF THIS ALTERNATE SHALL BE APPROVED BY THE ENGINEER.)

THE GUARDRAIL ANCHOR ASSEMBLY IS REQUIRED AT ALL POINTS WHERE APPROACH GUARDRAIL IS TO BE ATTACHED TO THE END OF BARRIER RAIL. FOR POINTS OF ATTACHMENT, SEE SKETCH.

AFTER INSTALLATION, THE EXPOSED THREAD OF THE BOLT SHALL BE BURRED WITH A SHARP POINTED TOOL.

THE COST OF THE GUARDRAIL ANCHOR ASSEMBLY SHALL BE INCLUDED IN THE UNIT CONTRACT PRICE BID FOR VERTICAL CONCRETE BARRIER RAIL.

THE VERTICAL REINFORCING BARS MAY BE SHIFTED SLIGHTLY IN THE VERTICAL CONCRETE BARRIER RAIL TO CLEAR ASSEMBLY BOLTS.

THE 1 1/4" Ø HOLES SHALL BE FORMED OR DRILLED WITH A CORE BIT. IMPACT TOOLS WILL NOT BE PERMITTED. ANY CONCRETE DAMAGED BY THIS WORK SHALL BE REPAIRED TO THE SATISFACTION OF THE ENGINEER.

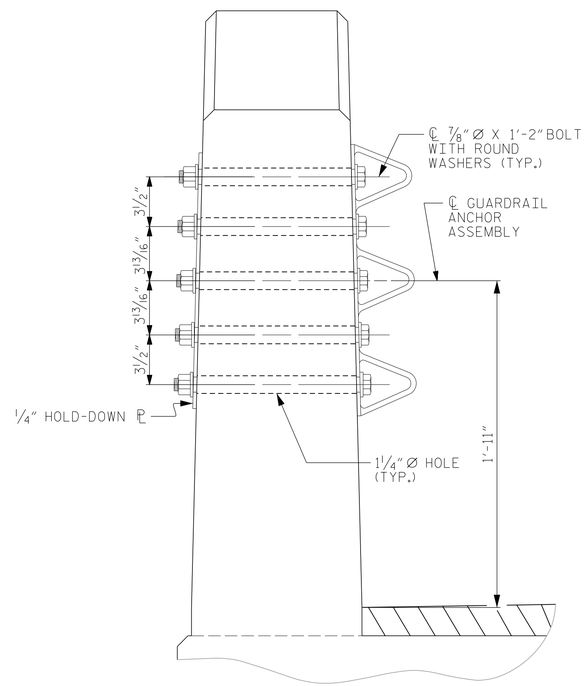

SECTION E-E

GUARDRAIL ANCHOR ASSEMBLY DETAILS

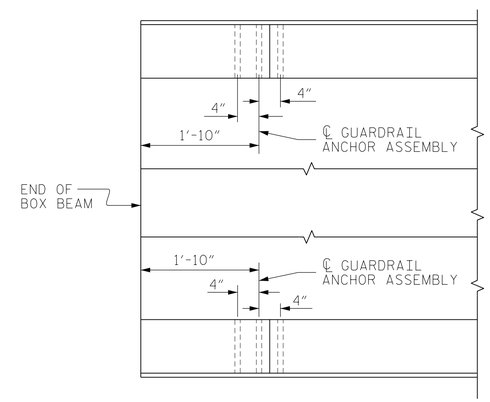

PLAN

LOCATION OF ANCHORS FOR GUARDRAIL

END BENT #1 SHOWN, END BENT #2 SIMILAR.

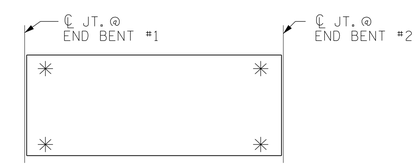

SKETCH SHOWING POINTS OF ATTACHMENT

✳ DENOTES GUARDRAIL ANCHOR ASSEMBLY

PROJECT NO. 17BP.5.R.48

PERSON COUNTY

STATION: 16+30.50 -L-

SHEET 8 OF 8

DocuSigned by: Jeff Loftus FE51DC02E6784AD... 2/26/2016

NORTH CAROLINA PROFESSIONAL SEAL 041425 ENGINEER JEFFREY M. LOFTUS

DOCUMENT NOT CONSIDERED FINAL UNLESS ALL SIGNATURES COMPLETED

STEWART

Firm License No. C-1051
421 Fayetteville St,
Suite 400
Raleigh, NC 27601
T 919.380.8750
www.stewartinc.com

STATE OF NORTH CAROLINA
DEPARTMENT OF TRANSPORTATION
RALEIGH

STANDARD
GUARDRAIL ANCHORAGE FOR VERTICAL CONCRETE BARRIER RAIL

REVISIONS						SHEET NO.
NO.	BY:	DATE:	NO.	BY:	DATE:	S-12
1			3			TOTAL SHEETS
2			4			20

(SHT 1) STD. NO. GRA3

ASSEMBLED BY : J. LOFTUS		DATE : 09/14	
CHECKED BY : D. RUGGLES		DATE : 09/14	
DRAWN BY : MAA 5/10	REV. 10/1/11	MAA/GM	
CHECKED BY : GM 5/10	REV. 12/5/11	MAA/GM	
	REV. 6/13	MAA/GM	

12/17/2015
...\400_012_17BP5R48_SMU_GRA08.dgn
USER:jloftus

DocuSign Envelope ID: E9741AAC-7F54-4C29-8FAB-30EDB6ECE9EF

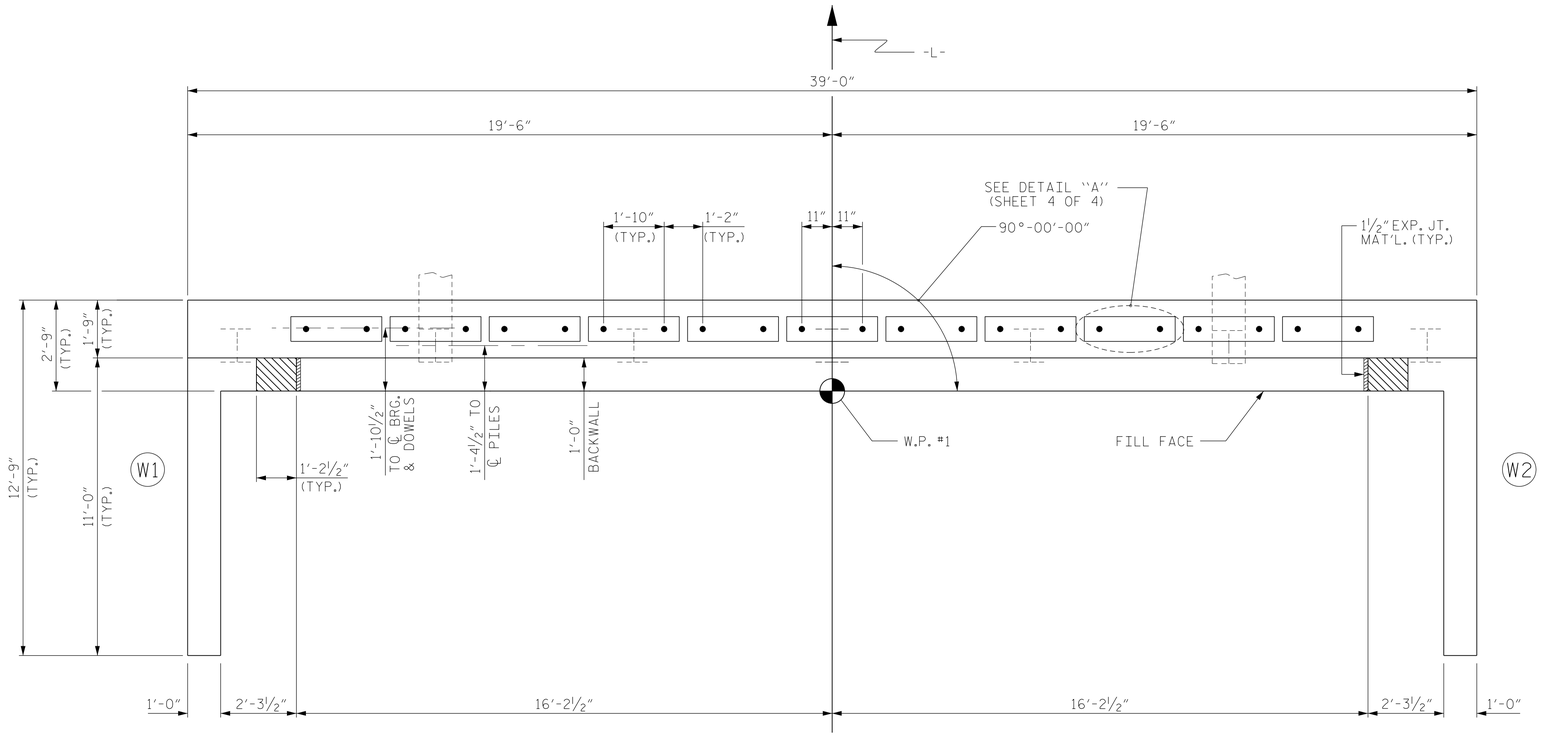

PLAN

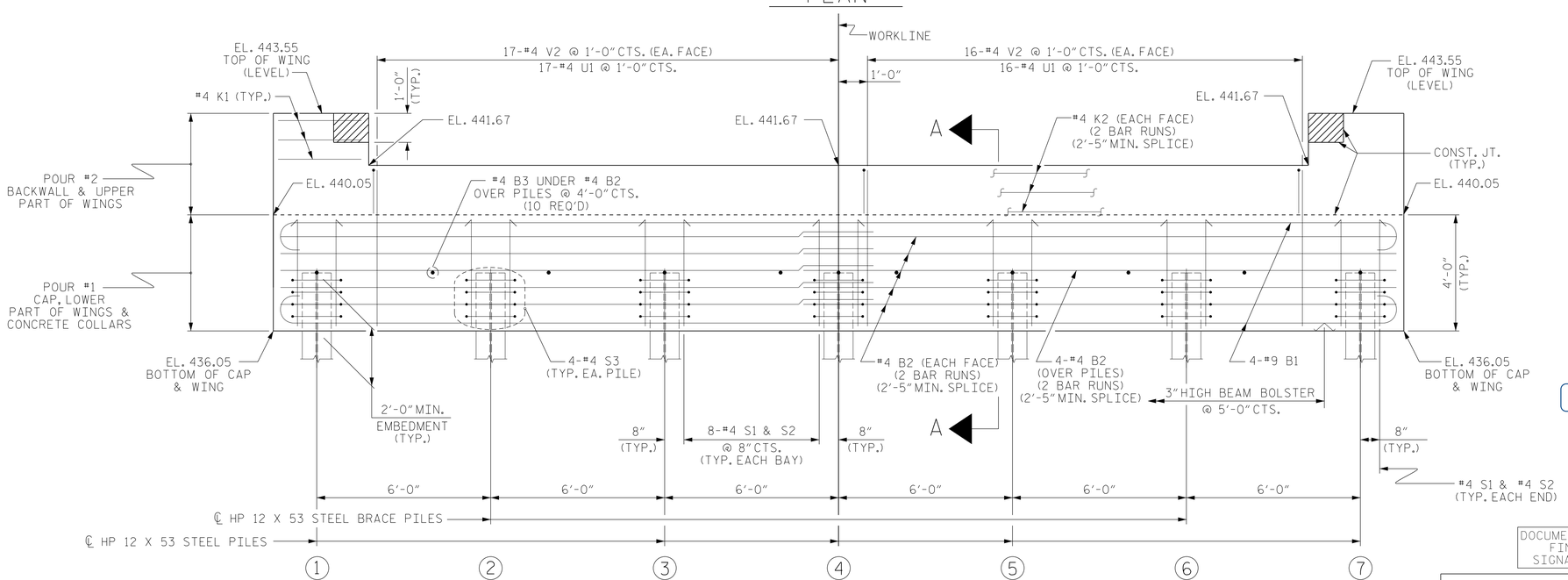

ELEVATION

WINGS NOT SHOWN FOR CLARITY.
FOR SECTION A-A, SEE SHEET 4 OF 4.
CONCRETE COLLARS FOR STEEL PILES NOT SHOWN IN PLAN AND ELEVATION VIEWS FOR CLARITY.
SEE "CORROSION PROTECTION FOR STEEL PILES DETAIL", SHEET 4 OF 4.

NOTES

STIRRUPS IN CAP MAY BE SHIFTED AS NECESSARY TO CLEAR DOWELS.

THE CONCRETE IN THE SHADED AREA OF THE WING SHALL BE POURED AFTER THE VERTICAL CONCRETE BARRIER RAIL IS CAST IF SLIP FORMING IS USED.

FOR PILE SPLICE DETAILS, SEE SHEET 4 OF 4.

FOR WING DETAILS, SEE SHEET 3 OF 4.

PROJECT NO. 17BP.5.R.48

PERSON COUNTY

STATION: 16+30.50 -L-

SHEET 1 OF 4

DocuSigned by: Jeff Loftus FE51DC02E6794A0 2/26/2016

NORTH CAROLINA PROFESSIONAL SEAL 041425 ENGINEER JEFFREY M. LOFTUS

DOCUMENT NOT CONSIDERED FINAL UNLESS ALL SIGNATURES COMPLETED

STATE OF NORTH CAROLINA
DEPARTMENT OF TRANSPORTATION
RALEIGH

SUBSTRUCTURE

END BENT No. 1

REVISIONS						SHEET NO.
NO.	BY:	DATE:	NO.	BY:	DATE:	S-13
1			3			TOTAL SHEETS
2			4			20

STEWART

Firm License No. C-1051
421 Fayetteville St,
Suite 400
Raleigh, NC 27601
T 919.380.8750
www.stewartinc.com

ASSEMBLED BY : J. LOFTUS	DATE : 09-14		
CHECKED BY : D. RUGGLES	DATE : 09-14		
DRAWN BY : WJH 12/11	REV. 8/14	MAA/TMG	
CHECKED BY : AAC 12/11			

12/17/2015
...\400_013_17BP5R48_SMU_EB01.dgn
USER:jloftus

STD. NO. EB_33_90S4_33BB

DocuSign Envelope ID: E9741AAC-7F54-4C29-8FAB-30EDB6ECE9EF

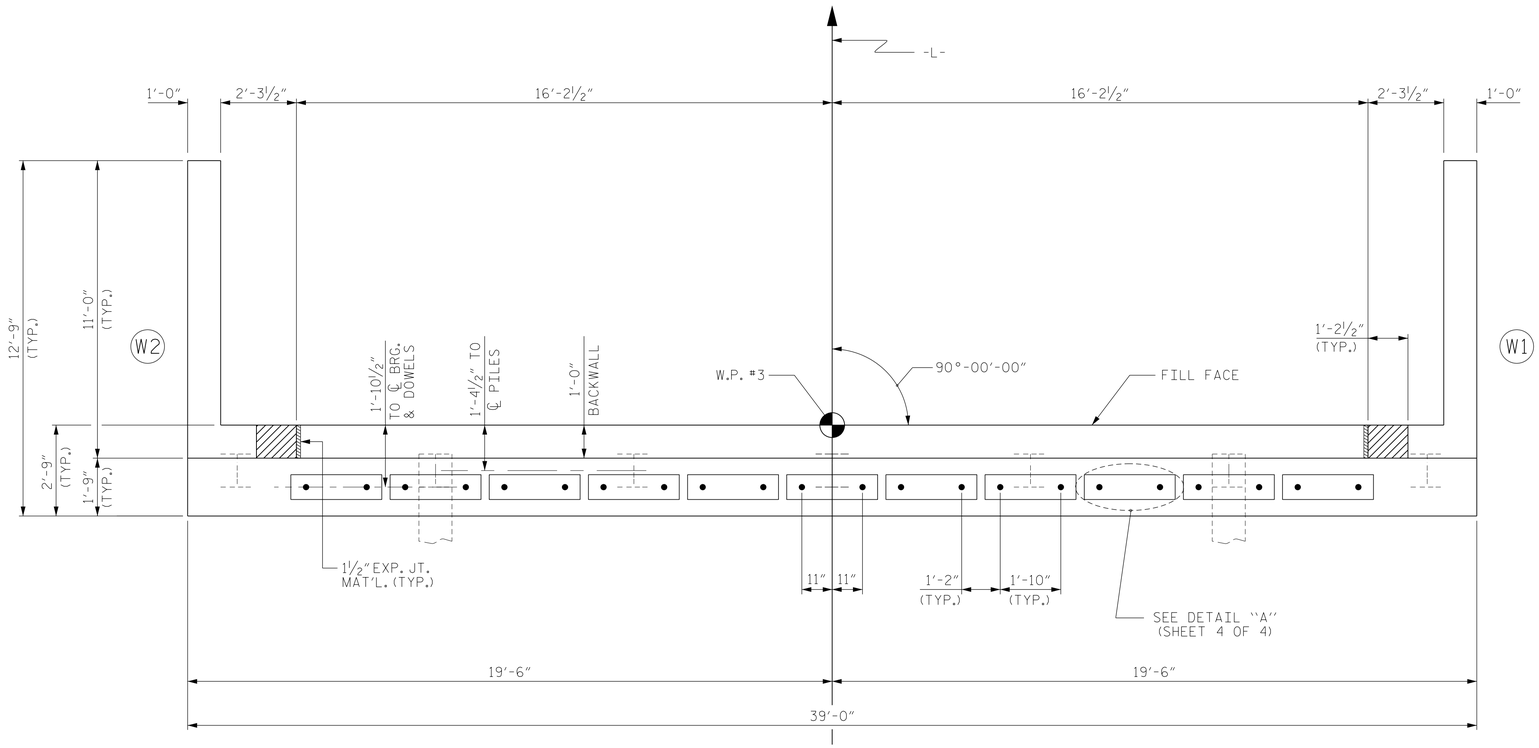

PLAN

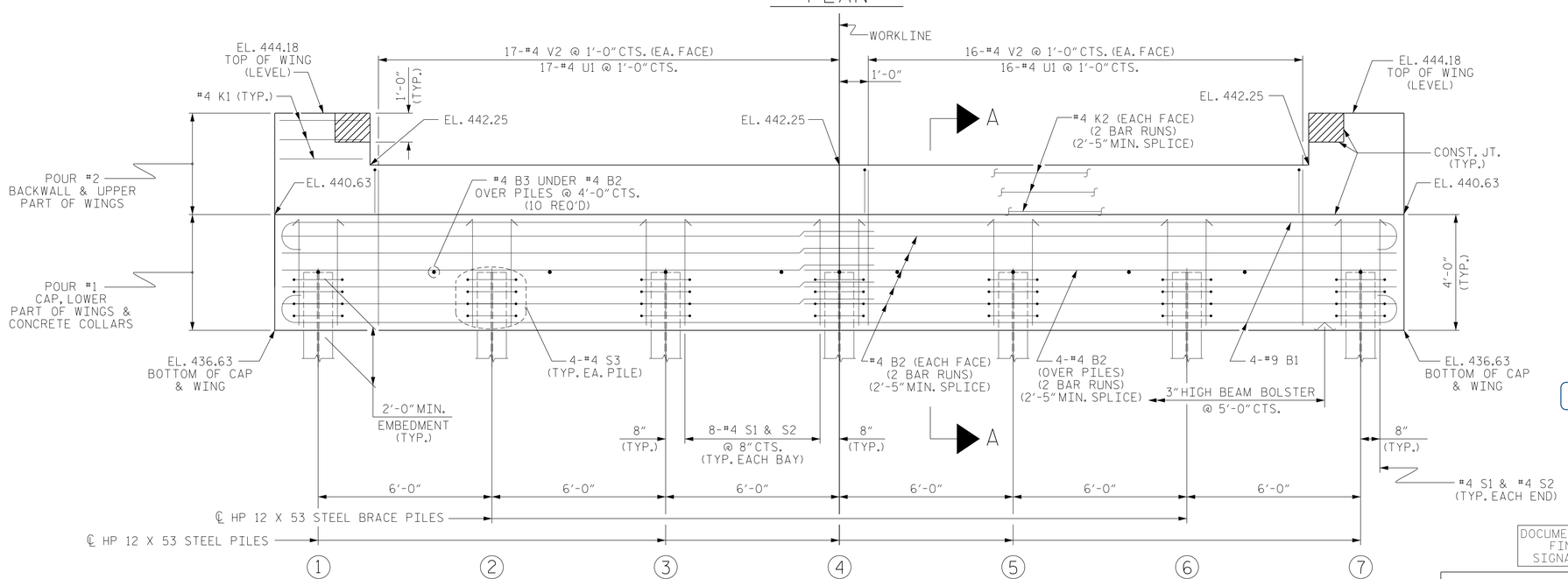

ELEVATION

WINGS NOT SHOWN FOR CLARITY.
FOR SECTION A-A, SEE SHEET 4 OF 4.
CONCRETE COLLARS FOR STEEL PILES NOT SHOWN IN PLAN AND ELEVATION VIEWS FOR CLARITY.
SEE "CORROSION PROTECTION FOR STEEL PILES DETAIL", SHEET 4 OF 4.

NOTES

STIRRUPS IN CAP MAY BE SHIFTED AS NECESSARY TO CLEAR DOWELS.

THE CONCRETE IN THE SHADED AREA OF THE WING SHALL BE POURED AFTER THE VERTICAL CONCRETE BARRIER RAIL IS CAST IF SLIP FORMING IS USED.

FOR PILE SPLICE DETAILS, SEE SHEET 4 OF 4.

FOR WING DETAILS, SEE SHEET 3 OF 4.

PROJECT NO. 17BP.5.R.48

PERSON COUNTY

STATION: 16+30.50 -L-

SHEET 2 OF 4

DocuSigned by: Jeff Loftus FE51DC02E6794A0 2/26/2016

NORTH CAROLINA PROFESSIONAL SEAL 041425 ENGINEER JEFFREY M. LOFTUS

DOCUMENT NOT CONSIDERED FINAL UNLESS ALL SIGNATURES COMPLETED

STEWART
Firm License No. C-1051
421 Fayetteville St,
Suite 400
Raleigh, NC 27601
T 919.380.8750
www.stewartinc.com

STATE OF NORTH CAROLINA
DEPARTMENT OF TRANSPORTATION
RALEIGH

SUBSTRUCTURE

END BENT No. 2

REVISIONS						SHEET NO.
NO.	BY:	DATE:	NO.	BY:	DATE:	S-14
1			3			TOTAL SHEETS
2			4			20

ASSEMBLED BY : J. LOFTUS		DATE :	09-14
CHECKED BY : D. RUGGLES		DATE :	09-14
DRAWN BY : WJH	12/11	REV. 8/14	MAA/TMG
CHECKED BY : AAC	12/11		

12/17/2015
...\400_014_17BP5R48_SMU_EB02.dgn
USER:jloftus

STD. NO. EB_33_90S4_33BB

DocuSign Envelope ID: E9741AAC-7F54-4C29-8FAB-30EDB6ECE9EF

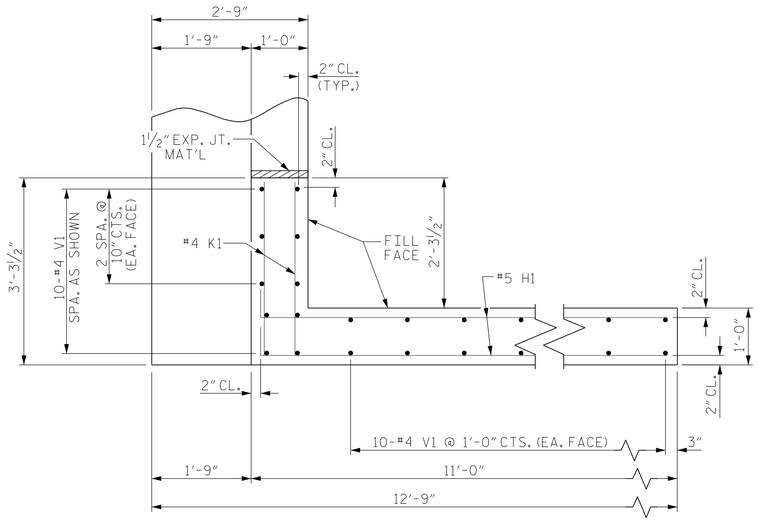

PLAN OF WING (W1)

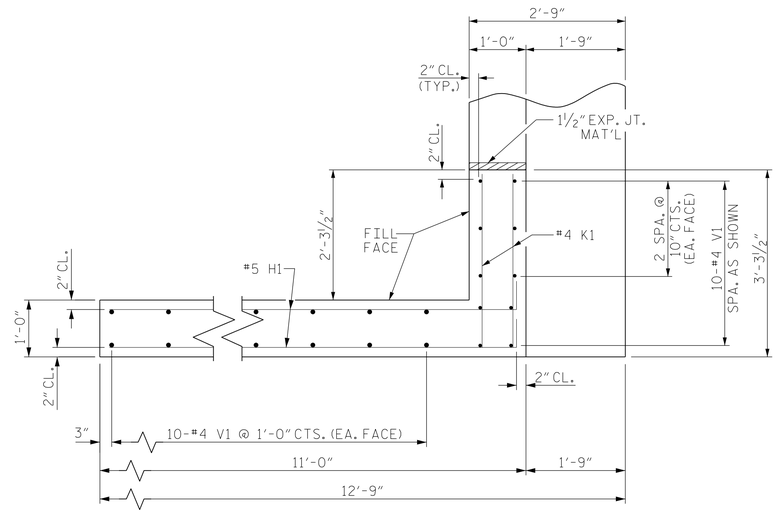

PLAN OF WING (W2)

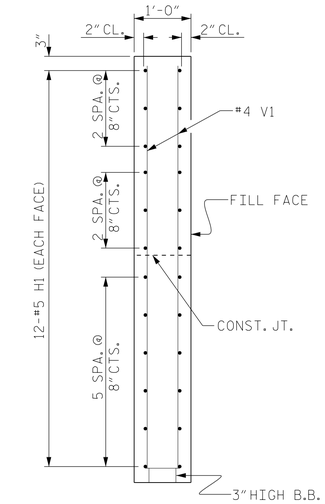

SECTION X-X

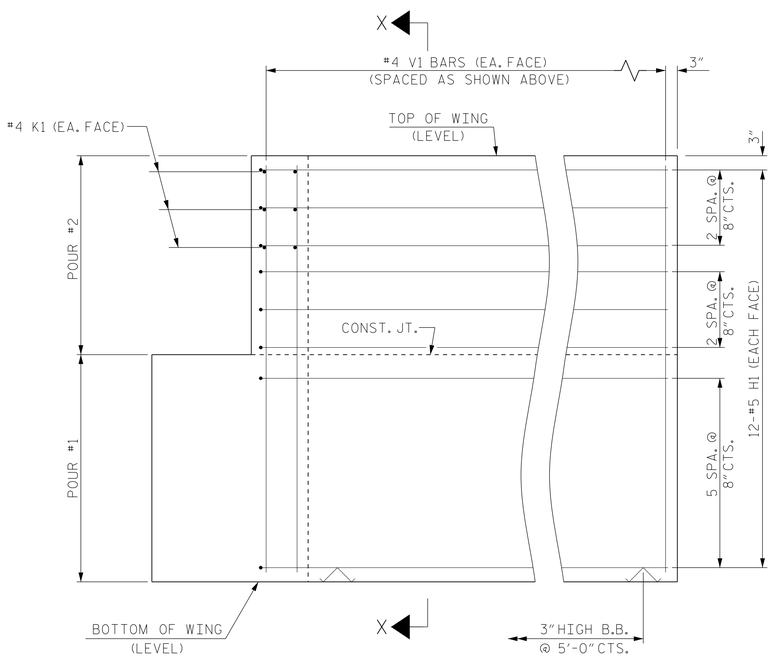

ELEVATION OF WING (W1)

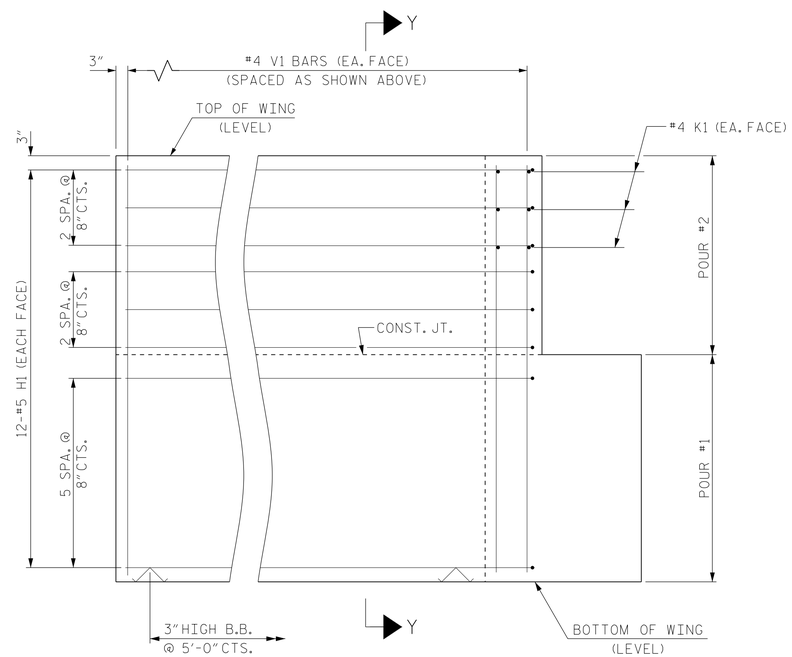

ELEVATION OF WING (W2)

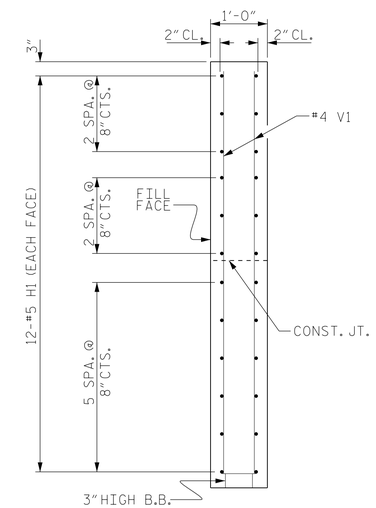

SECTION Y-Y

WING DETAILS

PROJECT NO. 17BP.5.R.48

PERSON COUNTY

STATION: 16+30.50 -L-

SHEET 3 OF 4

DocuSigned by: Jeff Loftus FE51DC02E6794A8... 2/26/2016

NORTH CAROLINA PROFESSIONAL SEAL 041425 ENGINEER JEFFREY M. LOFTUS

DOCUMENT NOT CONSIDERED FINAL UNLESS ALL SIGNATURES COMPLETED

STEWART

Firm License No. C-1051
421 Fayetteville St,
Suite 400
Raleigh, NC 27601
T 919.380.8750
www.stewartinc.com

STATE OF NORTH CAROLINA
DEPARTMENT OF TRANSPORTATION
RALEIGH

SUBSTRUCTURE

END BENT
WING DETAILS

REVISIONS						SHEET NO.
NO.	BY:	DATE:	NO.	BY:	DATE:	S-15
1			3			TOTAL SHEETS
2			4			20

ASSEMBLED BY : J. LOFTUS DATE : 09-14
CHECKED BY : D. RUGGLES DATE : 09-14
DRAWN BY : WJH 12/11 REV. 8/14 MAA/TMG
CHECKED BY : AAC 12/11

12/17/2015
...\400_015_17BP5R48_SMU_EB03.dgn
USER:jloftus

STD. NO. EB_33_90S4_33BB

DocuSign Envelope ID: E9741AAC-7F54-4C29-8FAB-30EDB6ECE9EF

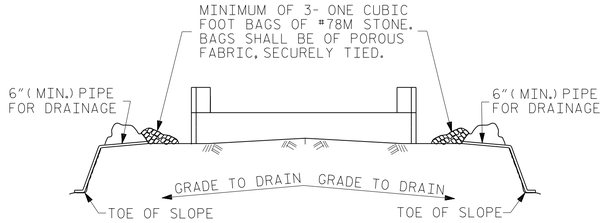

BAGGED STONE AND PIPE SHALL BE PLACED IMMEDIATELY AFTER COMPLETION OF END BENT EXCAVATION. PIPE MAY BE EITHER CONCRETE, CORRUGATED STEEL, CORRUGATED ALUMINUM ALLOY, OR CORRUGATED PLASTIC. PERFORATED PIPE WILL NOT BE ALLOWED.

BAGGED STONE SHALL REMAIN IN PLACE UNTIL THE ENGINEER DIRECTS THAT IT BE REMOVED. THE CONTRACTOR SHALL REMOVE AND DISPOSE OF SILT ACCUMULATIONS AT BAGGED STONE WHEN SO DIRECTED BY THE ENGINEER. BAGS SHALL BE REMOVED AND REPLACED WHENEVER THE ENGINEER DETERMINES THAT THEY HAVE DETERIORATED AND LOST THEIR EFFECTIVENESS.

NO SEPARATE PAYMENT WILL BE MADE FOR THIS WORK AND THE ENTIRE COST OF THIS WORK SHALL BE INCLUDED IN THE UNIT CONTRACT PRICE BID FOR THE SEVERAL PAY ITEMS.

TEMPORARY DRAINAGE AT END BENT

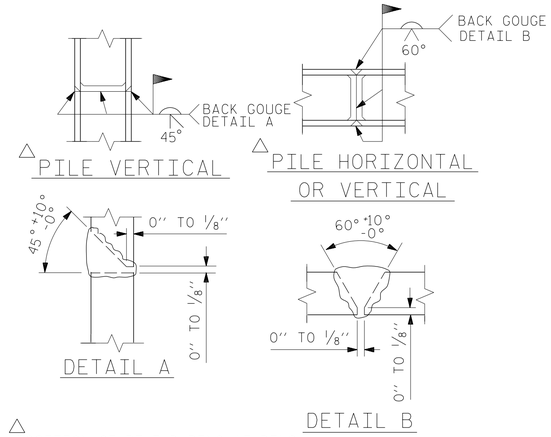

△ POSITION OF PILE DURING WELDING.

PILE SPLICE DETAILS

BAR TYPES

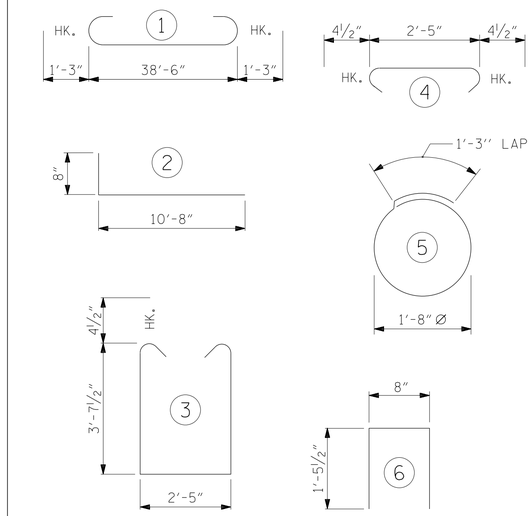

ALL BAR DIMENSIONS ARE OUT TO OUT.

END BENT No. 1		END BENT No. 2	
HP 12 X 53 STEEL PILES		HP 12 X 53 STEEL PILES	
NO: 7	LIN. FT.= 175	NO: 7	LIN. FT.= 175

BILL OF MATERIAL
FOR ONE END BENT

BAR	NO.	SIZE	TYPE	LENGTH	WEIGHT
B1	8	#9	1	41'-0"	1115
B2	28	#4	STR	20'-7"	385
B3	10	#4	STR	2'-5"	16
D1	22	#8	STR	2'-3"	132
H1	48	#5	2	11'-4"	567
K1	12	#4	STR	2'-11"	23
K2	12	#4	STR	20'-7"	165
S1	50	#4	3	10'-5"	348
S2	50	#4	4	3'-2"	106
S3	28	#4	5	6'-6"	122
U1	33	#4	6	3'-7"	79
V1	60	#4	STR	7'-2"	287
V2	66	#4	STR	5'-3"	231

REINFORCING STEEL (FOR ONE END BENT) 3576 LBS.

CLASS A CONCRETE BREAKDOWN (FOR ONE END BENT)

POUR #1 CAP, LOWER PART OF WINGS & COLLARS 20.1 C.Y.

POUR #2 BACKWALL & UPPER PART OF WINGS 5.4 C.Y.

TOTAL CLASS A CONCRETE 25.5 C.Y.

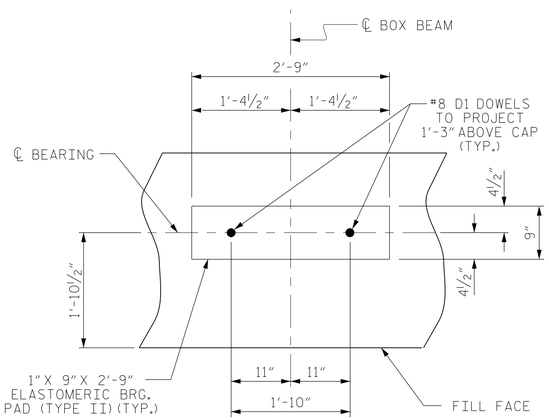

DETAIL "A"

(END BENT No. 1 SHOWN, END BENT No. 2 SIMILAR BY ROTATION)

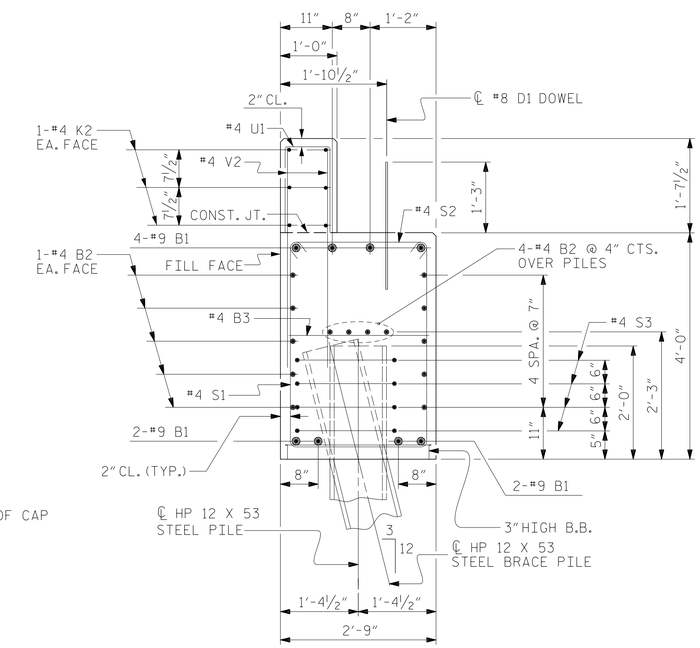

SECTION A-A

(CONCRETE COLLAR NOT SHOWN FOR CLARITY. SEE "CORROSION PROTECTION FOR STEEL PILES DETAIL.")

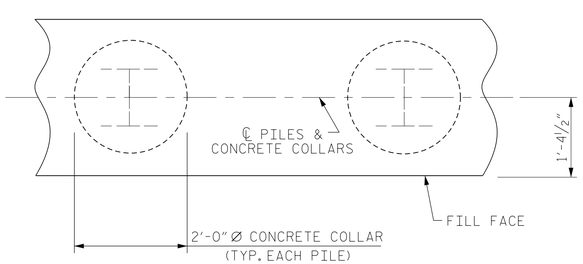

PLAN

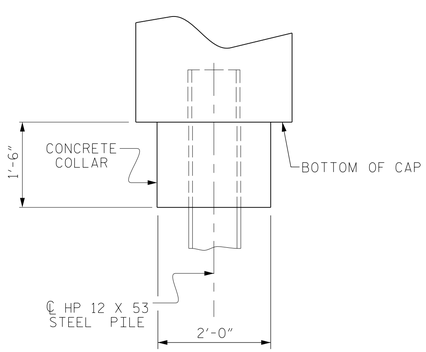

ELEVATION

CORROSION PROTECTION FOR STEEL PILES DETAIL

(END BENT No. 1 SHOWN, END BENT No. 2 SIMILAR BY ROTATION)

DocuSigned by: Jeff Loftus FE51DC02E6784B... 2/26/2016

NORTH CAROLINA PROFESSIONAL SEAL 041425 ENGINEER JEFFREY M. LOFTUS

DOCUMENT NOT CONSIDERED FINAL UNLESS ALL SIGNATURES COMPLETED

STEWART

Firm License No. C-1051
421 Fayetteville St,
Suite 400
Raleigh, NC 27601
T 919.380.8750
www.stewartinc.com

PROJECT NO. 17BP.5.R.48
PERSON COUNTY
STATION: 16+30.50 -L-

SHEET 4 OF 4

STATE OF NORTH CAROLINA
DEPARTMENT OF TRANSPORTATION
RALEIGH

SUBSTRUCTURE

END BENT No. 1 & 2 DETAILS

REVISIONS						SHEET NO.
NO.	BY:	DATE:	NO.	BY:	DATE:	S-16
1			3			TOTAL SHEETS
2			4			20

ASSEMBLED BY : J. LOFTUS		DATE :	09-14
CHECKED BY : D. RUGGLES		DATE :	09-14
DRAWN BY : WJH	12/11	REV. 8/14	MAA/TMG
CHECKED BY : AAC	12/11		

12/17/2015
...\400_016_17BP5R48_SMU_EB04.dgn
USER:jloftus

STD. NO. EB_33_90S4_33BB

DocuSign Envelope ID: E9741AAC-7F54-4C29-8FAB-30EDB6ECE9EF

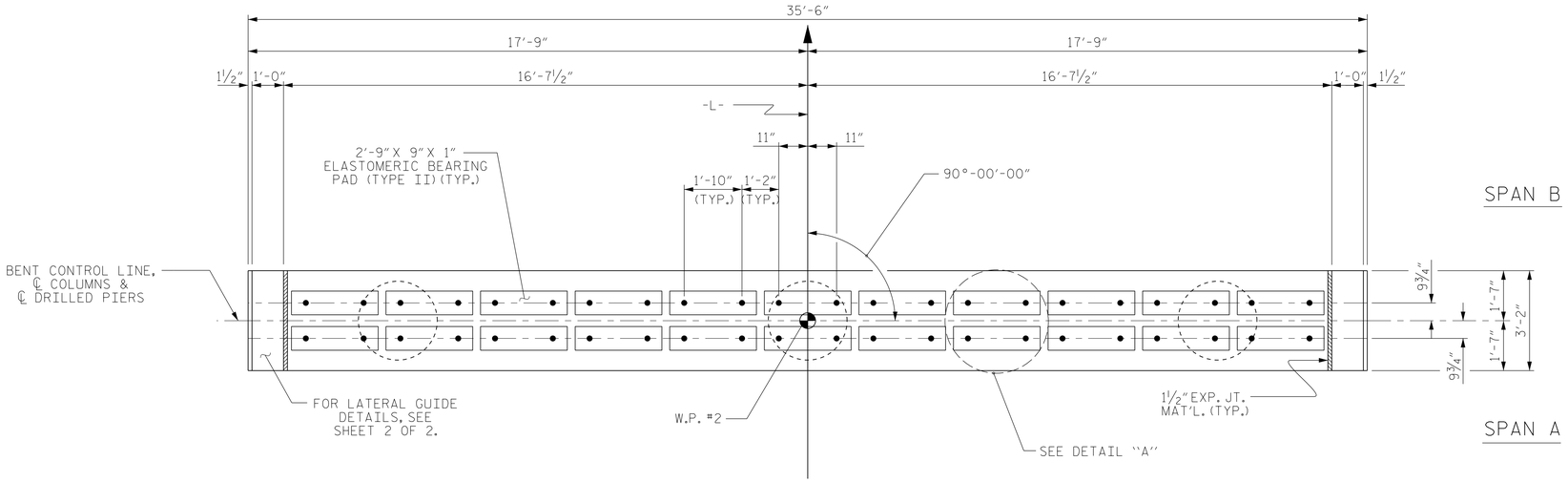

PLAN

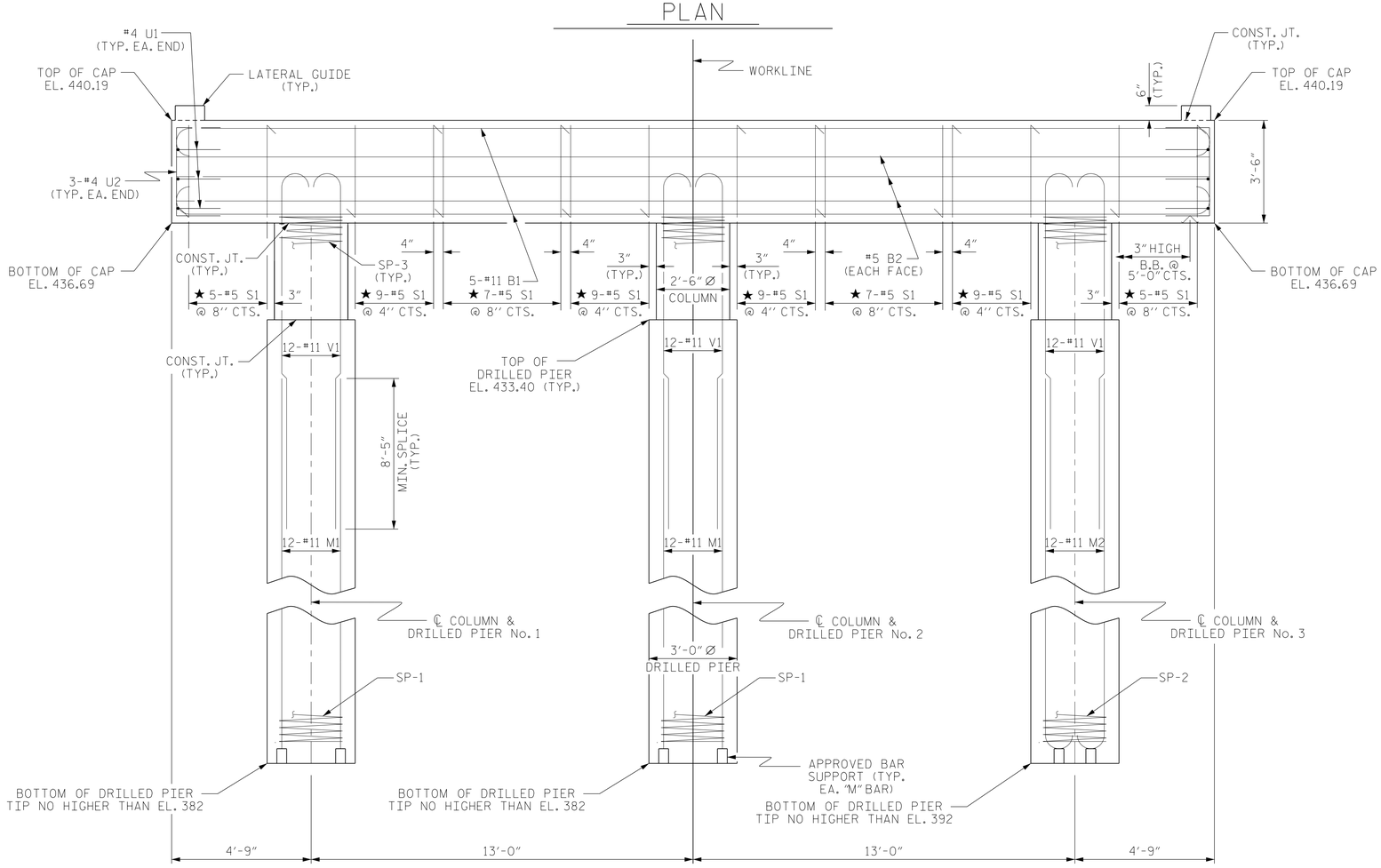

ELEVATION

DIMENSIONS & REINFORCING STEEL ARE TYPICAL FOR EACH COLUMN & DRILLED PIER UNLESS OTHERWISE NOTED.

NOTES

STIRRUPS IN CAP MAY BE SHIFTED AS NECESSARY TO CLEAR DOWELS.

HOOKS ON "V" BARS MAY BE TURNED AS NECESSARY FOR PLACING REINFORCING STEEL.

FOR DRILLED PIERS, SEE SECTION 411 OF THE STANDARD SPECIFICATIONS.

ALL STEEL IN THE DRILLED PIERS IS INCLUDED IN THE PAY ITEMS FOR "REINFORCING STEEL" AND "SPIRAL COLUMN REINFORCING STEEL."

THE LATERAL GUIDES ARE NOT TO BE POURED UNTIL AFTER THE CORED SLAB UNITS ARE IN PLACE.

★ INVERT ALTERNATE STIRRUPS.

THE LOCATION OF THE CONSTRUCTION JOINT IN THE DRILLED PIERS IS BASED ON AN APPROXIMATE GROUND LINE ELEVATION. IF THE CONSTRUCTION JOINT IS ABOVE THE ACTUAL GROUND LINE ELEVATION, THE CONTRACTOR SHALL PLACE THE CONSTRUCTION JOINT ONE FOOT BELOW THE GROUND LINE.

DRILLED PIERS SHALL BE TERMINATED ONE FOOT ± ABOVE NORMAL WATER SURFACE ELEVATION FOR SHAFTS LOCATED IN WATER.

THE CONTRACTOR'S ATTENTION IS CALLED TO THE FACT THAT THE LONGITUDINAL REINFORCEMENT FOR DRILLED PIERS IS DETAILED WITH 3 FEET OF EXTRA LENGTH.

THE CONTRACTOR HAS THE OPTION TO OMIT THE LATERAL GUIDE IF APPROVED BY THE ENGINEER.

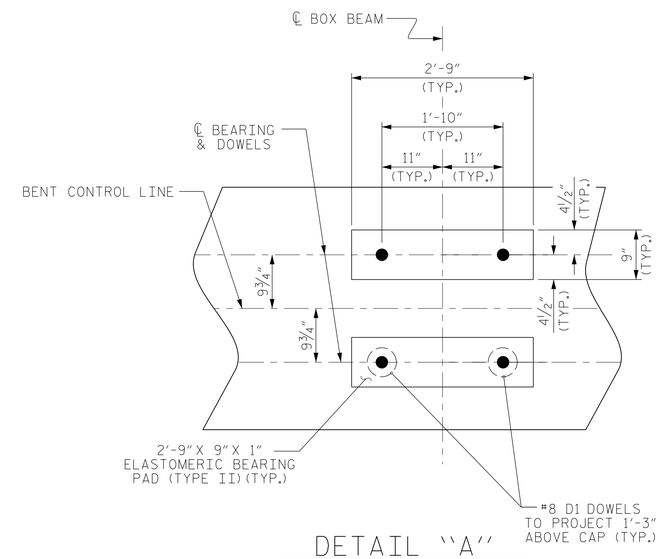

DETAIL "A"

(DIMENSIONS ARE TYPICAL EACH BEARING)

PROJECT NO. 17BP.5.R.48

PERSON COUNTY

STATION: 16+30.50 -L-

SHEET 1 OF 2

DocuSigned by: Jeff Loftus FE51DC02E6784A0... 2/26/2016

NORTH CAROLINA PROFESSIONAL SEAL 041425 ENGINEER JEFFREY M. LOFTUS

DOCUMENT NOT CONSIDERED FINAL UNLESS ALL SIGNATURES COMPLETED

STEWART

Firm License No. C-1051
421 Fayetteville St,
Suite 400
Raleigh, NC 27601
T 919.380.8750
www.stewartinc.com

STATE OF NORTH CAROLINA
DEPARTMENT OF TRANSPORTATION
RALEIGH

SUBSTRUCTURE

BENT No. 1

REVISIONS						SHEET NO.
NO.	BY:	DATE:	NO.	BY:	DATE:	S-17
1			3			TOTAL SHEETS
2			4			20

DRAWN BY:	J. LOFTUS	DATE :	09-14
CHECKED BY:	D. RUGGLES	DATE :	09-14
DESIGN ENGINEER OF RECORD:	J. LOFTUS	DATE :	09-14

12/17/2015
...\400_017_17BP5R48_SMU_B01.dgn
USER:jloftus

DocuSign Envelope ID: E9741AAC-7F54-4C29-8FAB-30EDB6ECE9EF

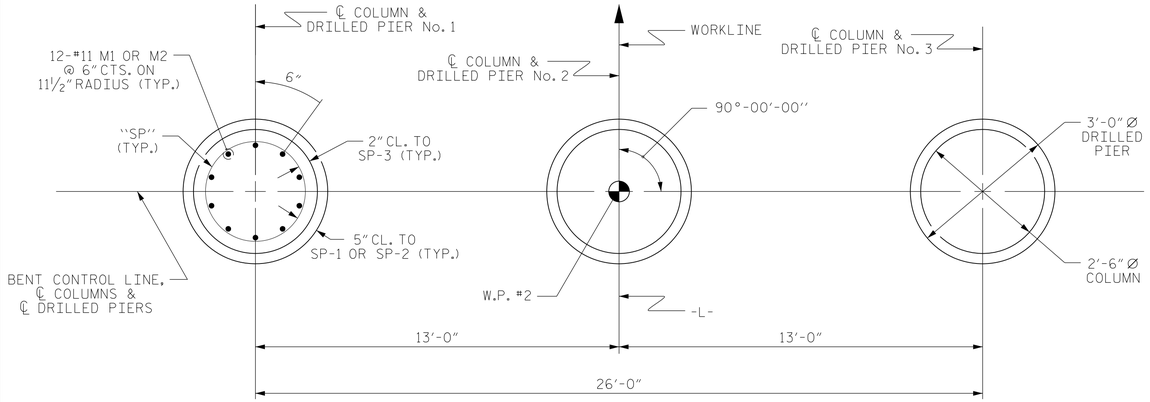

PLAN OF DRILLED PIERS & COLUMNS

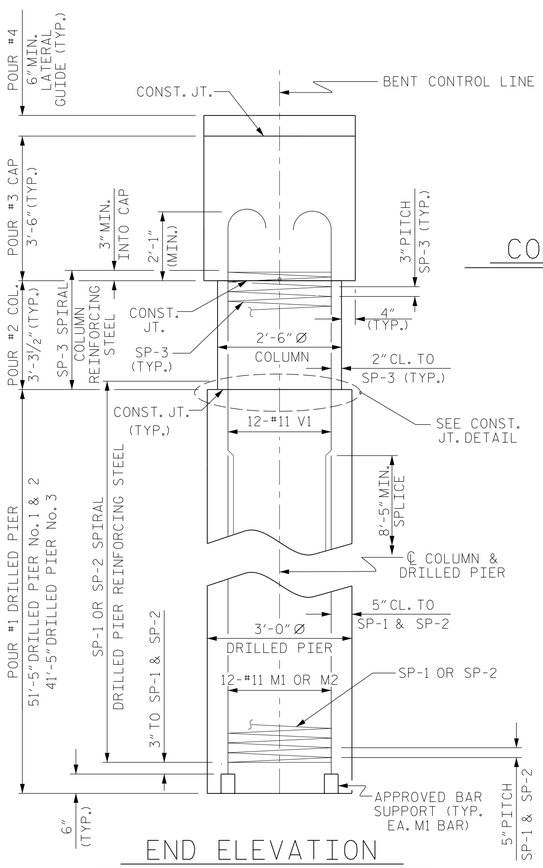

END ELEVATION

NOTE: M2 BARS IN DRILLED SHAFT No. 3 SHALL TERMINATE WITH HOOKS AT THE PILE TIP, AS DETAILED ON SHEET S-17.

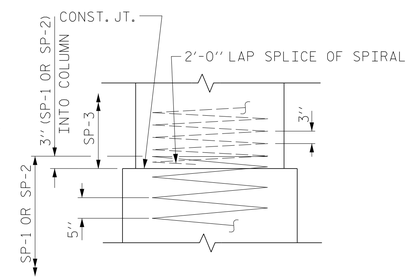

CONSTRUCTION JOINT DETAIL

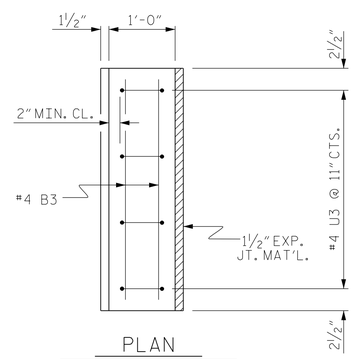

PLAN

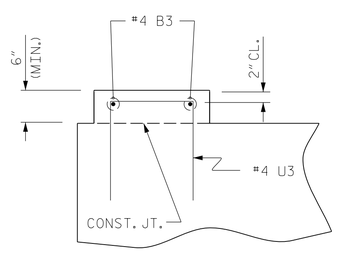

ELEVATION

LATERAL GUIDE DETAILS

(LEFT LATERAL GUIDE SHOWN, RIGHT SIDE SIMILAR)

BAR TYPES

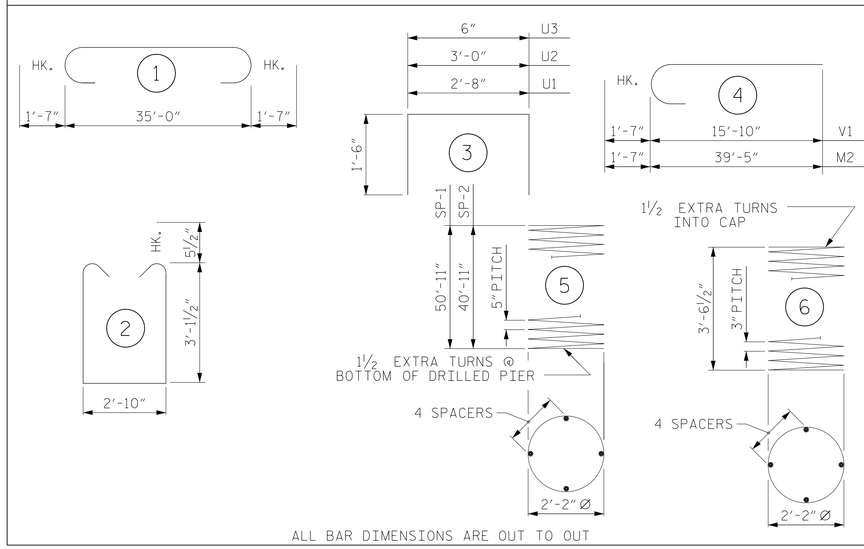

ALL BAR DIMENSIONS ARE OUT TO OUT

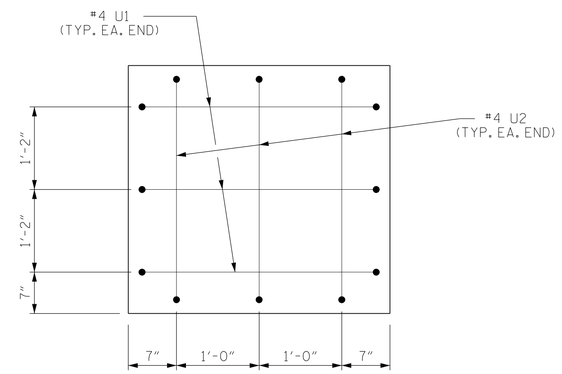

END OF CAP VIEW

(TYPICAL BOTH ENDS)

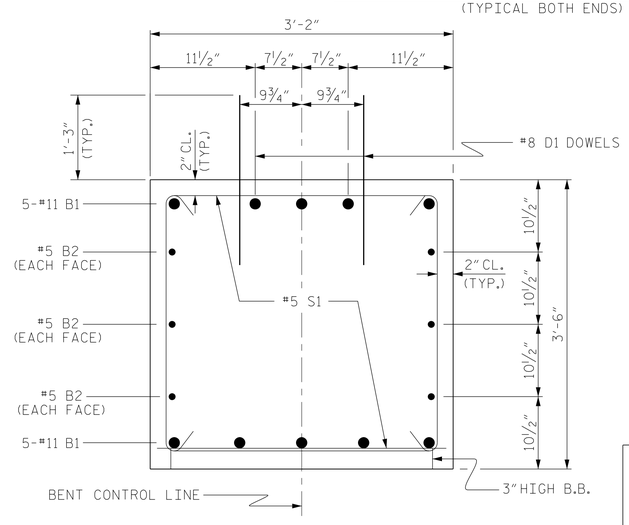

SECTION THRU CAP

BILL OF MATERIAL

FOR ONE BENT

BAR	NO.	SIZE	TYPE	LENGTH	WEIGHT
B1	10	#11	1	38'-2"	2028
B2	6	#5	STR	35'-2"	220
B3	4	#4	STR	2'-10"	8
D1	44	#8	STR	2'-3"	264
S1	60	#5	2	10'-0"	626
U1	6	#4	3	5'-8"	23
U2	6	#4	3	6'-0"	24
U3	8	#4	3	3'-6"	19
M1	24	#11	STR	49'-5"	6301
M2	12	#11	4	41'-0"	2614
V1	36	#11	4	17'-5"	3331

REINFORCING STEEL (FOR ONE BENT) 15458 LBS.

SP-1	2	✳	5	823'-5"	1718
SP-2	1	✳	5	663'-8"	692
SP-3	3	✳✳	6	104'-9"	210

SPIRAL COLUMN REINFORCING STEEL (FOR ONE BENT) 2620 LBS.

✳ THE SP-1 & SP-2 SPIRAL REINFORCING STEEL SHALL BE W31 OR D-31 COLD DRAWN WIRE OR #5 PLAIN OR DEFORMED BAR

✳✳ THE SP-3 SPIRAL REINFORCING STEEL SHALL BE W20 OR D-20 COLD DRAWN WIRE OR #4 PLAIN OR DEFORMED BAR

CLASS A CONCRETE BREAKDOWN (FOR ONE BENT)

POUR #2 (COLUMNS)	1.8 C.Y.
POUR #3 (CAP)	14.6 C.Y.
POUR #4 (LATERAL GUIDE)	0.1 C.Y.
TOTAL CLASS A CONCRETE	16.5 C.Y.

DRILLED PIERS: (FOR ONE BENT)

DRILLED PIER CONCRETE
POUR #1 (DRILLED PIERS) 37.8 C.Y.

3'-0" Ø DRILLED PIERS 144.25 LIN. FT.

PERMANENT STEEL CASING FOR 3'-0" Ø DRILLED PIER 94.20 LIN. FT.

CSL TUBES 595.00 LIN. FT.

PROJECT NO. 17BP.5.R.48

PERSON COUNTY

STATION: 16+30.50 -L-

SHEET 2 OF 2

DocuSigned by: Jeff Loftus FE51DC02E9794A2B 2/26/2016

NORTH CAROLINA PROFESSIONAL SEAL 041425 ENGINEER JEFFREY M. LOFTUS

DOCUMENT NOT CONSIDERED FINAL UNLESS ALL SIGNATURES COMPLETED

STEWART

Firm License No. C-1051
421 Fayetteville St,
Suite 400
Raleigh, NC 27601
T 919.380.8750
www.stewartinc.com

STATE OF NORTH CAROLINA
DEPARTMENT OF TRANSPORTATION
RALEIGH

SUBSTRUCTURE

BENT No. 1

REVISIONS						SHEET NO.
NO.	BY:	DATE:	NO.	BY:	DATE:	S-18
1			3			TOTAL SHEETS
2			4			20

DRAWN BY: J. LOFTUS DATE: 09-14
CHECKED BY: D. RUGGLES DATE: 09-14
DESIGN ENGINEER OF RECORD: J. LOFTUS DATE: 09-14

12/17/2015
...\400_018_17BP5R48_SMU_B02.dgn
USER:jloftus

DocuSign Envelope ID: E9741AAC-7F54-4C29-8FAB-30EDB6ECE9EF

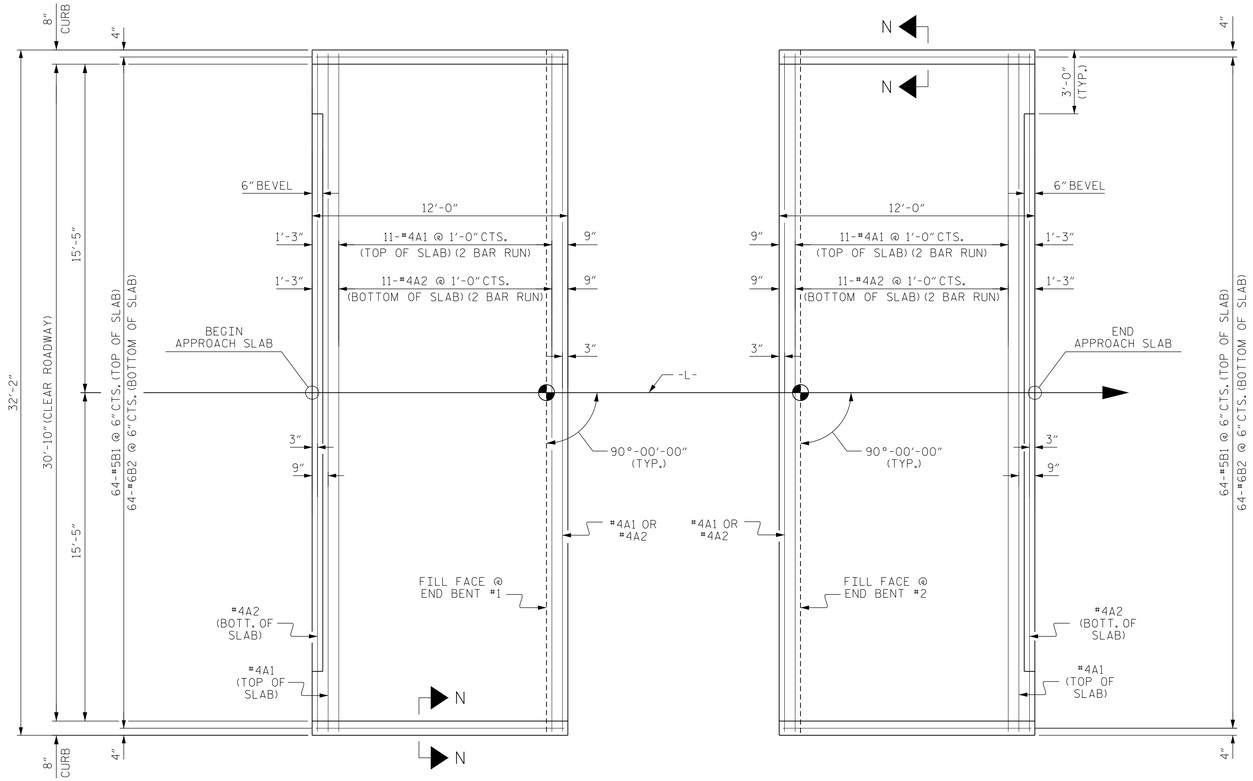

PLAN @ END BENT #1

PLAN @ END BENT #2

DIMENSIONS SHOWN ARE TYPICAL FOR BOTH APPROACH SLABS

NOTES

FOR REINFORCED BRIDGE APPROACH FILL INCLUDING GEOTEXTILE, IMPERMEABLE GEOMEMBRANE, 4" Ø DRAINAGE PIPE, #78M STONE, AND SELECT MATERIAL, SEE ROADWAY PLANS.

AREA BETWEEN THE WINGWALL AND APPROACH SLAB SHALL BE GRADED TO DRAIN THE WATER AWAY FROM THE FILL FACE OF THE BRIDGE AND SHALL BE PAVED. SEE ROADWAY PLANS.

APPROACH SLAB GROOVING IS NOT REQUIRED.

BILL OF MATERIAL

APPROACH SLAB AT EB #1

BAR	NO.	SIZE	TYPE	LENGTH	WEIGHT
* A1	26	#4	STR	16'-11"	294
A2	26	#4	STR	16'-9"	291
* B1	64	#5	STR	11'-2"	745
B2	64	#6	STR	11'-8"	1121
REINFORCING STEEL				LBS.	1412
* EPOXY COATED REINFORCING STEEL				LBS.	1039
CLASS AA CONCRETE				C.Y.	17.0

APPROACH SLAB AT EB #2

BAR	NO.	SIZE	TYPE	LENGTH	WEIGHT
* A1	26	#4	STR	16'-11"	294
A2	26	#4	STR	16'-9"	291
* B1	64	#5	STR	11'-2"	745
B2	64	#6	STR	11'-8"	1121
REINFORCING STEEL				LBS.	1412
* EPOXY COATED REINFORCING STEEL				LBS.	1039
CLASS AA CONCRETE				C.Y.	17.0

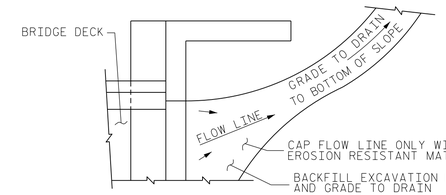

NOTE: IF THE APPROACH SLAB IS NOT CONSTRUCTED IMMEDIATELY AFTER THE BACKFILLING OF THE END BENT EXCAVATION, GRADE TO DRAIN TO THE BOTTOM OF THE SLOPE AND PROVIDE EROSION RESISTANT MATERIAL, SUCH AS FIBERGLASS ROVING OR AS DIRECTED BY THE ENGINEER TO PREVENT SOIL EROSION AND TO PROTECT THE AREA ADJACENT TO THE STRUCTURE. THE CONTRACTOR WILL BE REQUIRED TO REMOVE THESE MATERIALS PRIOR TO CONSTRUCTION OF THE APPROACH SLAB.

TEMPORARY DRAINAGE DETAIL

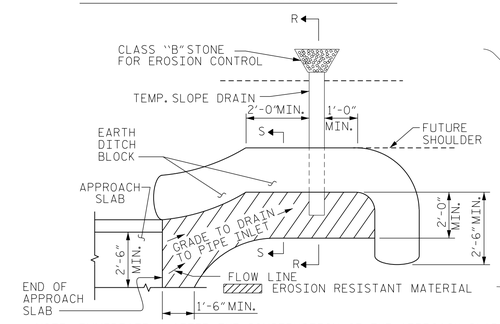

NOTE: IMMEDIATELY AFTER THE CONSTRUCTION OF THE APPROACH SLAB, THE CONTRACTOR SHALL PROVIDE TEMPORARY BERM AND SLOPE DRAIN. CONTRACTOR SHALL GRADE TO PIPE INLET AND PROVIDE EROSION RESISTANT MATERIAL AS SHOWN. THE EROSION RESISTANT MATERIAL SHALL BE EITHER 1) ASPHALT PLANT MIX, TYPE 1 OR TYPE 2, MIN. 2" DEPTH, 2) EROSION CONTROL MAT, OR 3) CONCRETE, AS DIRECTED BY THE ENGINEER. THE SLOPE DRAIN SHALL CONSIST OF A NON-PERFORATED TEMPORARY DRAINAGE PIPE, 12 INCHES IN DIAMETER.

PLAN VIEW

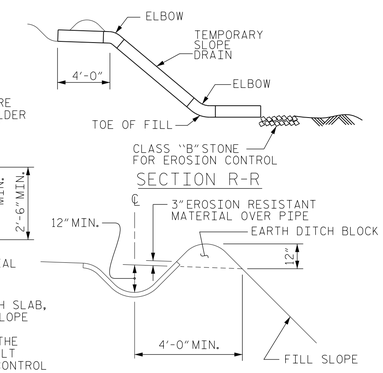

SECTION R-R

SECTION S-S

TEMPORARY BERM AND SLOPE DRAIN DETAILS

(TO BE USED WHEN SHOULDER BERM GUTTER IS REQUIRED)

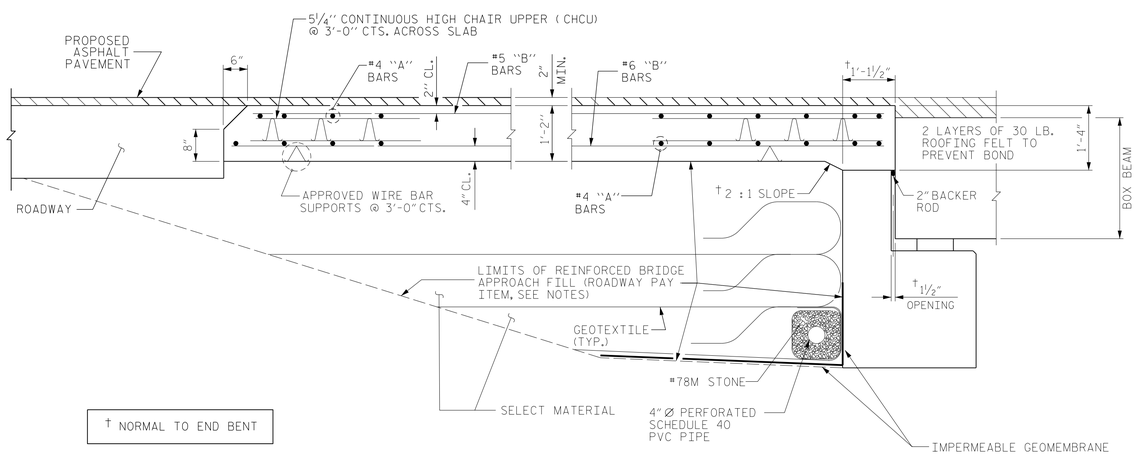

† NORMAL TO END BENT

SECTION THRU SLAB

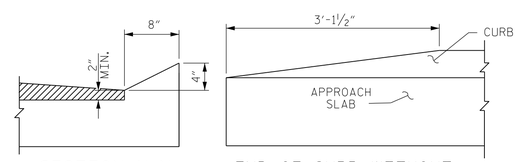

SECTION N-N

END OF CURB WITHOUT SHOULDER BERM GUTTER

CURB DETAILS

SPLICE LENGTHS		
BAR SIZE	EPOXY COATED	UNCOATED
#4	2'-0"	1'-9"
#5	2'-6"	2'-2"
#6	3'-10"	2'-7"

PROJECT NO. 17BP.5.R.48

PERSON COUNTY

STATION: 16+30.50 -L-

DocuSigned by: Jeff Loftus FE51DC02E6794A9... 2/26/2016

NORTH CAROLINA PROFESSIONAL SEAL 041425 ENGINEER JEFFREY M. LOFTUS

DOCUMENT NOT CONSIDERED FINAL UNLESS ALL SIGNATURES COMPLETED

STEWART

Firm License No. C-1051
421 Fayetteville St,
Suite 400
Raleigh, NC 27601
T 919.380.8750
www.stewartinc.com

STATE OF NORTH CAROLINA
DEPARTMENT OF TRANSPORTATION
RALEIGH

STANDARD
BRIDGE APPROACH SLAB
FOR PRESTRESSED CONCRETE
BOX BEAM UNIT
90° SKEW

REVISIONS						SHEET NO.
NO.	BY:	DATE:	NO.	BY:	DATE:	S-19
1			3			TOTAL SHEETS
2			4			20

ASSEMBLED BY : J. LOFTUS		DATE : 12-15	
CHECKED BY : D. RUGGLES		DATE : 12-15	
DRAWN BY : MAA	11/11	REV. 9-15	MAA/TMG
CHECKED BY : AAC	11/11		

$$$$$$SYSTIME$$$$$
$$$$$$$$$$$$$$$$$$$$$$DGN$$$$$$$$$$$$$$$$$$$$$$
$$$$USERNAME$$$$

STD. NO. BAS_BB_33_90S

STANDARD NOTES

DESIGN DATA:

SPECIFICATIONS	A.A.S.H.T.O. (CURRENT)
LIVE LOAD	SEE PLANS
IMPACT ALLOWANCE	SEE A.A.S.H.T.O.
STRESS IN EXTREME FIBER OF	
STRUCTURAL STEEL - AASHTO M270 GRADE 36	20,000 LBS. PER SQ. IN.
- AASHTO M270 GRADE 50W	27,000 LBS. PER SQ. IN.
- AASHTO M270 GRADE 50	27,000 LBS. PER SQ. IN.
REINFORCING STEEL IN TENSION	
GRADE 60	24,000 LBS. PER SQ. IN.
CONCRETE IN COMPRESSION	1,200 LBS. PER SQ. IN.
CONCRETE IN SHEAR	SEE A.A.S.H.T.O.
STRUCTURAL TIMBER - TREATED OR	
UNTREATED - EXTREME FIBER STRESS	1,800 LBS. PER SQ. IN.
COMPRESSION PERPENDICULAR TO GRAIN OF TIMBER	375 LBS. PER SQ. IN.
EQUIVALENT FLUID PRESSURE OF EARTH	30 LBS. PER CU. FT. (MINIMUM)

MATERIAL AND WORKMANSHIP:

EXCEPT AS MAY OTHERWISE BE SPECIFIED ON PLANS OR IN THE SPECIAL PROVISIONS, ALL MATERIAL AND WORKMANSHIP SHALL BE IN ACCORDANCE WITH THE 2012 "STANDARD SPECIFICATIONS FOR ROADS AND STRUCTURES" OF THE N. C. DEPARTMENT OF TRANSPORTATION.

STEEL SHEET PILING FOR PERMANENT OR TEMPORARY APPLICATIONS SHALL BE HOT ROLLED.

CONCRETE:

UNLESS OTHERWISE REQUIRED ON PLANS, CLASS A CONCRETE SHALL BE USED FOR ALL PORTIONS OF ALL STRUCTURES WITH THE EXCEPTION THAT: CLASS AA CONCRETE SHALL BE USED IN BRIDGE SUPERSTRUCTURES, ABUTMENT BACKWALLS, AND APPROACH SLABS; AND CLASS B CONCRETE SHALL BE USED FOR SLOPE PROTECTION AND RIP RAP.

CONCRETE CHAMFERS:

UNLESS OTHERWISE NOTED ON THE PLANS, ALL EXPOSED CORNERS ON STRUCTURES SHALL BE CHAMFERED 3/4" WITH THE FOLLOWING EXCEPTIONS: TOP CORNERS OF CURBS MAY BE ROUNDED TO 1-1/2" RADIUS WHICH IS BUILT INTO CURB FORMS; CORNERS OF TRANSVERSE FLOOR EXPANSION JOINTS SHALL BE ROUNDED WITH A 1/4" FINISHING TOOL UNLESS OTHERWISE REQUIRED ON PLANS; AND CORNERS OF EXPANSION JOINTS IN THE ROADWAY FACES AND TOPS OF CURBS AND SIDEWALKS SHALL BE ROUNDED TO A 1/4" RADIUS WITH A FINISHING STONE OR TOOL UNLESS OTHERWISE REQUIRED ON PLANS.

DOWELS:

DOWELS WHEN INDICATED ON PLANS AS FOR CULVERT EXTENSIONS, SHALL BE EMBEDDED AT LEAST 12" INTO THE OLD CONCRETE AND GROUTED INTO PLACE WITH 1:2 CEMENT MORTAR.

ALLOWANCE FOR DEAD LOAD DEFLECTION, SETTLEMENT, ETC. IN CASTING SUPERSTRUCTURES:

BRIDGES SHALL BE BUILT ON THE GRADE OR VERTICAL CURVE SHOWN ON PLANS. SLABS, CURBS AND PARAPETS SHALL CONFORM TO THE GRADE OR CURVE.

ALL DIMENSIONS WHICH ARE GIVEN IN SECTION AND ARE AFFECTED BY DEAD LOAD DEFLECTIONS ARE DIMENSIONS AT CENTER LINE OF BEARING UNLESS OTHERWISE NOTED ON PLANS. IN SETTING FORMS FOR STEEL BEAM BRIDGES AND PRESTRESSED CONCRETE GIRDER BRIDGES, ADJUSTMENTS SHALL BE MADE DUE TO THE DEAD LOAD DEFLECTIONS FOR THE ELEVATIONS SHOWN. WHERE BLOCKS ARE SHOWN OVER BEAMS FOR BUILDING UP TO THE SLAB, THE VERTICAL DIMENSIONS OF THE BLOCKS SHALL BE ADJUSTED BETWEEN BEARINGS TO COMPENSATE FOR DEAD LOAD DEFLECTIONS, VERTICAL CURVE ORDINATE, AND ACTUAL BEAM CAMBER. WHERE BOTTOM OF SLAB IS IN LINE WITH BOTTOM OF TOP FLANGES, DEPTH OF SLAB BETWEEN BEARINGS SHALL BE ADJUSTED TO COMPENSATE FOR DEAD LOAD DEFLECTION, VERTICAL CURVE ORDINATE, AND ACTUAL BEAM CAMBER.

IN SETTING FALSEWORK AND FORMS FOR REINFORCED CONCRETE SPANS, AN ALLOWANCE SHALL BE MADE FOR DEAD LOAD DEFLECTIONS, SETTLEMENT OF FALSEWORK, AND PERMANENT CAMBER WHICH SHALL BE PROVIDED FOR IN ADDITION TO THE ELEVATIONS SHOWN. AFTER REMOVAL OF THE FALSEWORK, THE FINISHED STRUCTURES SHALL CONFORM TO THE PROFILE AND ELEVATIONS SHOWN ON THE PLANS AND CONSTRUCTION ELEVATIONS FURNISHED BY THE ENGINEER.

DETAILED DRAWINGS FOR FALSEWORK OR FORMS FOR BRIDGE SUPERSTRUCTURE AND ANY STRUCTURE OR PARTS OF A STRUCTURE AS NOTED ON THE PLANS SHALL BE SUBMITTED TO THE ENGINEER FOR APPROVAL BEFORE CONSTRUCTION OF THE FALSEWORK OR FORMS IS STARTED.

REINFORCING STEEL:

ALL REINFORCING STEEL SHALL BE DEFORMED. DIMENSIONS RELATIVE TO PLACEMENT OF REINFORCING ARE TO CENTERS OF BARS UNLESS OTHERWISE INDICATED IN THE PLANS. DIMENSIONS ON BAR DETAILS ARE TO CENTERS OF BARS OR ARE OUT TO OUT AS INDICATED ON PLANS.

WIRE BAR SUPPORTS SHALL BE PROVIDED FOR REINFORCING STEEL WHERE INDICATED ON THE PLANS. WHEN BAR SUPPORT PIECES ARE PLACED IN CONTINUOUS LINES, THEY SHALL BE SO PLACED THAT THE ENDS OF THE SUPPORTING WIRES SHALL BE LAPPED TO LOCK LEGS ON ADJOINING PIECES.

STRUCTURAL STEEL:

AT THE CONTRACTOR'S OPTION, HE MAY SUBSTITUTE 7/8" Ø SHEAR STUDS FOR THE 3/4" Ø STUDS SPECIFIED ON THE PLANS. THIS SUBSTITUTION SHALL BE MADE AT THE RATE OF 3 - 7/8" Ø STUDS FOR 4 - 3/4" Ø STUDS, AND STUD SPACING CHANGES SHALL BE MADE AS NECESSARY TO PROVIDE THE SAME EQUIVALENT NUMBER OF 7/8" Ø STUDS ALONG THE BEAM AS SHOWN FOR 3/4" Ø STUDS BASED ON THE RATIO OF 3 - 7/8" Ø STUDS FOR 4 - 3/4" Ø STUDS. STUDS OF THE LENGTH SPECIFIED ON THE PLANS MUST BE PROVIDED. THE MAXIMUM SPACING SHALL BE 2'-0".

EXCEPT AT THE INTERIOR SUPPORTS OF CONTINUOUS BEAMS WHERE THE COVER PLATE IS IN CONTACT WITH BEARING PLATE, THE CONTRACTOR MAY, AT HIS OPTION, SUBSTITUTE FOR THE COVER PLATES DESIGNATED ON THE PLANS COVER PLATES OF THE EQUIVALENT AREA PROVIDED THESE PLATES ARE AT LEAST 5/16" IN THICKNESS AND DO NOT EXCEED A WIDTH EQUAL TO THE FLANGE WIDTH LESS 2" OR A THICKNESS EQUAL TO 2 TIMES THE FLANGE THICKNESS. THE SIZE OF FILLET WELDS SHALL CONFORM TO THE REQUIREMENTS OF THE CURRENT ANSI/AASHTO/AWS "BRIDGE WELDING CODE". ELECTROSLAG WELDING WILL NOT BE PERMITTED.

WITH THE SOLE EXCEPTION OF EDGES AT SURFACES WHICH BEAR ON OTHER SURFACES, ALL SHARP EDGES AND ENDS OF SHAPES AND PLATES SHALL BE SLIGHTLY ROUNDED BY SUITABLE MEANS TO A RADIUS OF APPROXIMATELY 1/16 INCH OR EQUIVALENT FLAT SURFACE AT A SUITABLE ANGLE PRIOR TO PAINTING, GALVANIZING, OR METALLIZING.

HANDRAILS AND POSTS:

METAL STANDARDS AND FACES OF THE CONCRETE END POSTS FOR THE METAL RAIL SHALL BE SET NORMAL TO THE GRADE OF THE CURB, UNLESS OTHERWISE SHOWN ON PLANS. THE METAL RAIL AND TOPS OF CONCRETE POSTS USED WITH THE ALUMINUM RAIL SHALL BE BUILT PARALLEL TO THE GRADE OF THE CURB.

METAL HANDRAILS SHALL BE IN ACCORDANCE WITH THE PLANS. RAILS SHALL BE AS MANUFACTURED FOR BRIDGE RAILING. CASTINGS SHALL BE OF A UNIFORM APPEARANCE. FINS AND OTHER DEFORMATIONS RESULTING FROM CASTING OR OTHERWISE SHALL BE REMOVED IN A MANNER SO THAT A UNIFORM COLORING OF THE COMPLETED CASTING SHALL BE OBTAINED. CASTINGS WITH DISCOLORATIONS OR OF NON-UNIFORM COLORING WILL NOT BE ACCEPTED. CERTIFIED MILL REPORTS ARE REQUIRED FOR METAL RAILS AND POSTS.

SPECIAL NOTES:

GENERALLY, IN CASE OF DISCREPANCY, THIS STANDARD SHEET OF NOTES SHALL GOVERN OVER THE SPECIFICATIONS, BUT THE REMAINDER OF THE PLANS SHALL GOVERN OVER NOTES HEREON, AND SPECIAL PROVISIONS SHALL GOVERN OVER ALL. SEE SPECIFICATIONS ARTICLE 105-4.

PROJECT NO. 17BP.5.R.48

PERSON COUNTY

STATION: 16+30.50 -L-

STATE OF NORTH CAROLINA
DEPARTMENT OF TRANSPORTATION
RALEIGH

STANDARD NOTES

STEWART
Firm License No. C-1051
421 Fayetteville St,
Suite 400
Raleigh, NC 27601
T 919.380.8750
www.stewartinc.com

REVISIONS						SHEET NO.
NO.	BY:	DATE:	NO.	BY:	DATE:	S-20
1			3			TOTAL SHEETS
2			4			20

ASSEMBLED BY : J. LOFTUS		DATE :	09-14
CHECKED BY : D. RUGGLES		DATE :	09-14
DRAWN BY : MAA	11/11		
CHECKED BY : AAC	11/11		

2/26/2016
...\400_020_17BP5R48_SMU_SN01.dgn
USER:jloftus