PROJECT REFERENCE NO.	SHEET NO.
38404	Sig. 10

EDI MODEL 2010ECL-NC CONFLICT MONITOR PROGRAMMING DETAIL

(remove jumpers and set switches as shown)

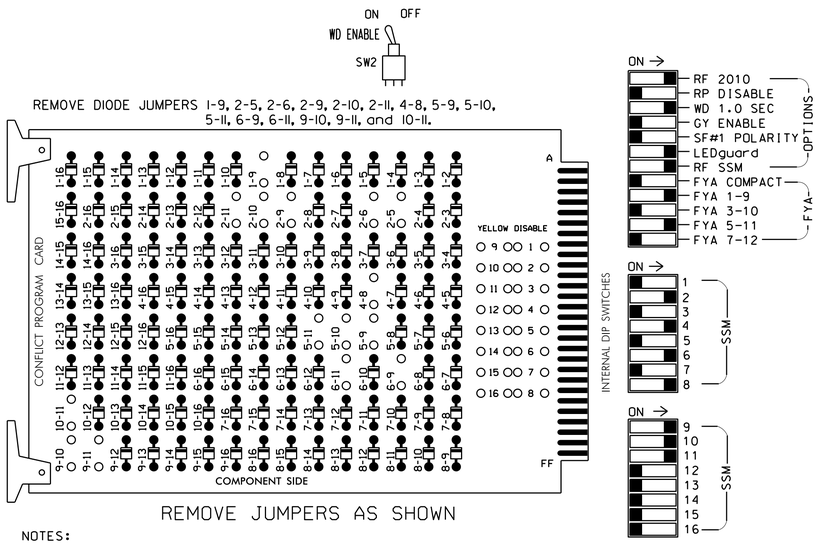

NOTES:

1. Card is provided with all diode jumpers in place. Removal of any jumper allows its channels to run concurrently.
2. Make sure jumpers SEL2-SEL5 are present on the monitor board.

■ = DENOTES POSITION OF SWITCH

NOTES

1. To prevent "flash-conflict" problems, insert red flash program blocks for all unused vehicle load switches in the output file. The installer shall verify that signal heads flash in accordance with the Signal Plans.
2. To prevent red failures on unused monitor channels, see Red Monitor Board Programming Detail this sheet.
3. Program phases 4 and 8 for Dual Entry.
4. Enable Simultaneous Gap-Out for all phases.
5. Program phases 2 and 6 for Start Up In Green.
6. Program phases 2 and 6 for Yellow Flash, and overlap 1 as Wag Overlaps.

EQUIPMENT INFORMATION

CONTROLLER.....2070
CABINET.....McCAIN/CONTROL TECHNOLOGIES (DWG.NO.9500-332-NCDOT)
SOFTWARE.....ECONOLITE OASIS 3.03.32E (or latest approved version)
CABINET MOUNT.....BASE
OUTPUT FILE POSITIONS...18(12-STD, 6-AUX)
LOAD SWITCHES USED.....S1,S2,S4,S5,S6,S8,S9,S10,S12
PHASES USED.....1*,2,4,5,6,8
OVERLAP "A".....1+2
OVERLAP "B".....5
OVERLAP "C".....5+6
OVERLAP "D".....NOT USED

* USED DURING PREEMPTION ONLY

SIGNAL HEAD HOOK-UP CHART

LOAD SWITCH NO.	S1	S2	S2P	S3	S4	S4P	S5	S6	S6P	S7	S8	S8P	S9	S10	S11	S12	S13	S14
PHASE	1	2	2 PED	3	4	4 PED	5	6	6 PED	7	8	8 PED	OLA	OLB	SPARE	OLC	OLD	SPARE
SIGNAL HEAD NO.	11★	21,22	NU	NU	41,42	NU	51★	61,62	NU	NU	81,82	NU	11★	42	NU	51★	NU	NU
RED		128			101			134			107			*				
YELLOW	*	129			102		*	135			108							
GREEN		130			103			136			109							
RED ARROW													A121			A114		
YELLOW ARROW													A122	A125		A115		
FLASHING YELLOW ARROW													A123			A116		
GREEN ARROW	127						133							A126				

NU = Not Used

* Denotes install load resistor. See load resistor installation detail this sheet.

★ See pictorial of head wiring in detail below.

FYA SIGNAL WIRING DETAIL

(wire signal heads as shown)

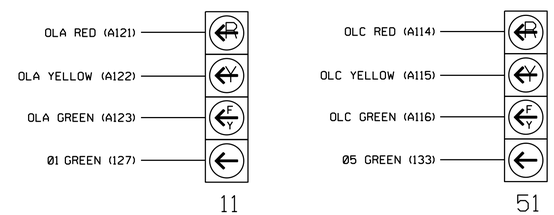

NOTE

The sequence display for signal heads 11 and 51 requires special logic programming. See sheet 2 for programming instructions.

INPUT FILE POSITION LAYOUT

(front view)

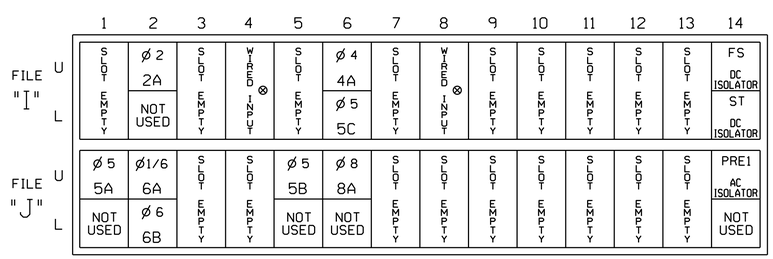

EX.: 1A, 2A, ETC. = LOOP NO.'S

⊗ Wired Input - Do not populate slot with detector card

FS = FLASH SENSE
ST = STOP TIME
PRE1 = RR PREEMPT

INPUT FILE CONNECTION & PROGRAMMING CHART

LOOP NO.	LOOP TERMINAL	INPUT FILE POS.	PIN NO.	INPUT ASSIGNMENT NO.	DETECTOR NO.	NEMA PHASE	CALL	EXTEND	FULL TIME DELAY	STRETCH TIME	DELAY TIME
2A	TB2-5,6	I2U	39	1	2	2	Y	Y			
4A	TB4-9,10	I6U	41	3	4	4	Y	Y			3
5A[1]	TB3-1,2	J1U	55	17	5	5	Y	Y			15
	-	I4U	47	9	22	2	Y	Y			
5B[2]	TB5-5,6	J5U	57	19	7	5	Y	Y			10
	-	I8U	49	11	24	2	Y	Y			
5C	TB4-11,12	I6L	45	7	14	5	Y	Y			15
6A	TB3-5,6	J2U	40	2	6	1/6	Y	Y			3
6B	TB3-7,8	J2L	44	6	16	6	Y	Y			
8A	TB5-9,10	J6U	42	4	8	8	Y	Y			5

[1] Add jumper from J1-W to I4-W, on rear of input file.

[2] Add jumper from J5-W to I8-W, on rear of input file.

INPUT FILE POSITION LEGEND: J2L
FILE J
SLOT 2
LOWER

PREEMPT ONLY PHASE OMIT NOTE

(program controller as shown below)

From Main Menu press '2' (Phase Control). Then '1' (Phase Control Functions). Program Phase 1 for 'Omit Phase' and Phases 2, 4, 5, 6, and 8 for 'Startup Calls'. This is to prevent Phase 1 from being served when not in Preempt.

LOAD RESISTOR INSTALLATION DETAIL

(install resistors as shown below)

ACCEPTABLE VALUES

VALUE (ohms)	WATTAGE
1.5K - 1.9K	25W (min)
2.0K - 3.0K	10W (min)

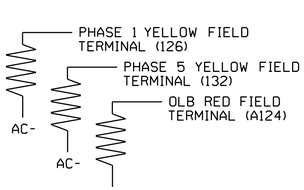

RED MONITOR BOARD PROGRAMMING

(position jumpers as shown below)

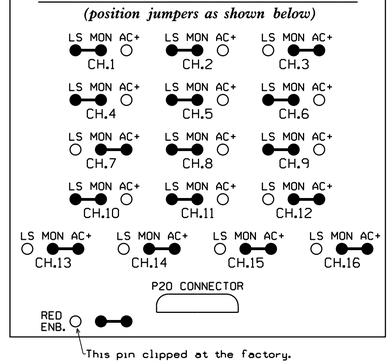

THIS ELECTRICAL DETAIL IS FOR
THE SIGNAL DESIGN: 05-0453
DESIGNED: March 2015
SEALED: 3/30/15
REVISED: N/A

THIS ELECTRICAL DETAIL SUPERSEDES THE DETAIL SEALED ON 04/11/2014

Electrical Detail - Sheet 1 of 3 - Final

ELECTRICAL AND PROGRAMMING DETAILS FOR:

SR 1228 (Chavasse Avenue) at SR 1143 (Williams Street)

Division 5 Vance County Henderson

PLAN DATE:	March 2015	REVIEWED BY:	T. Joyce
PREPARED BY:	B. Simmons	REVIEWED BY:	

REVISIONS	INIT.	DATE

Prepared in the Offices of:
Transportation Mobility and Safety Division
STATE OF NORTH CAROLINA DEPARTMENT OF TRANSPORTATION
Signal Management Section
750 N.Greenfield Pkwy, Garner, NC 27529

SEAL
NORTH CAROLINA PROFESSIONAL SEAL 022013 ENGINEER GEORGE C. BROWN

DocuSigned by: George C. Brown 4/9/2015
F32801E0D8EF834... DATE

SIG. INVENTORY NO. 05-0453

02-APR-2015 09:26
S:\TSU\ITS\Signals\Workgroups\Sig Man\Simmons\Working Folder\Expedite\050453_sm.ele.xxx.dgn
bsimmons