PROJECT REFERENCE NO.	SHEET NO.
38404	Sig. 12

RAILROAD PREEMPTION PROGRAMMING DETAIL

(program controller as shown below)

From Main Menu press 'A' (Preemption), then '1' (Standard Preemptions).

```
   PREEMPTION  #1  SETTINGS (NEXT:1-10)
INTERVAL/TIMING  |  CLEAR/DWELL PHASES
  GRN YEL  RED   |123456789101112131415 16
1  17  4.2  1.0  | X  X
2 255  0.0  0.0  |X  X   X
3   0  0.0  0.0  |
4   0  0.0  0.0  |
5   1  0.0  0.0  | X   X
EXIT CALLS       |
            OPTIONS
PRIORITY (Y/N TO SELECT) ............HIGH
DELAY TIMER (0-255 SEC) .............0
MIN GREEN BEFORE PRE (0= DEFAULT)....1
PED CLEAR BEFORE PRE (0= DEFAULT)....0
YELLOW CLEAR BEFORE PRE (0= DEFAULT).4.2
RED CLEAR BEFORE PRE (0= DEFAULT)....1.4
DWELL MIN TIMER (0-255 SEC) .........7
DWELL MAX TIMER (0=OFF,1-255MIN) ....0
DWELL HOLD-OVER TIMER (0-255) .......0
LATCH CALL? .........................N
LINK TO NEXT PREEMPT? ...............N
ENABLE BACKUP PROTECTION? ...........N
HOLD CLEAR 1 PHASES DURING DELAY? ...N
FAST GREEN FLASH DWELL PHASES? ......N
PED CLEARANCE THROUGH YELLOW? .......N
INHIBIT OVERLAP GREEN EXTENSION? ....N
SERVICE DURING SOFTWARE FLASH? ......N
REST IN RED DURING DWELL INTERVAL? ..N
FLASH DWELL INTERVAL? ...............N
ALLOW PEDS IN DWELL INTERVAL? .......N
RE-TIME DWELL INTERVAL? .............N
OVERLAPS:                | ABCDEFGHIJKLMNOP
DWELL INT FLASH YELLOW   |
OMIT OVERLAPS:           |  X
```

PREEMPT 1 AC ISOLATOR (MODEL 252) OUTPUT PROGRAMMING DETAIL

(set DIP switches as shown below)

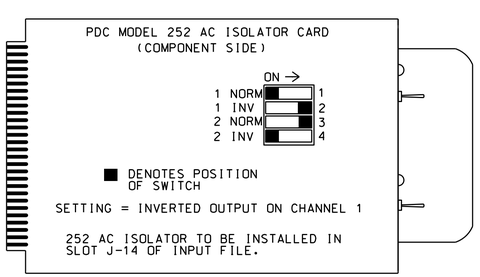

NOTE: IF ANOTHER MANUFACTURER TYPE OF AC ISOLATOR IS USED, OUTPUT PROGRAMMING IS LIKELY NOT TO EQUATE TO THAT SHOWN ABOVE.

RAILROAD PREEMPTION WIRING DETAIL

(wire as shown below)

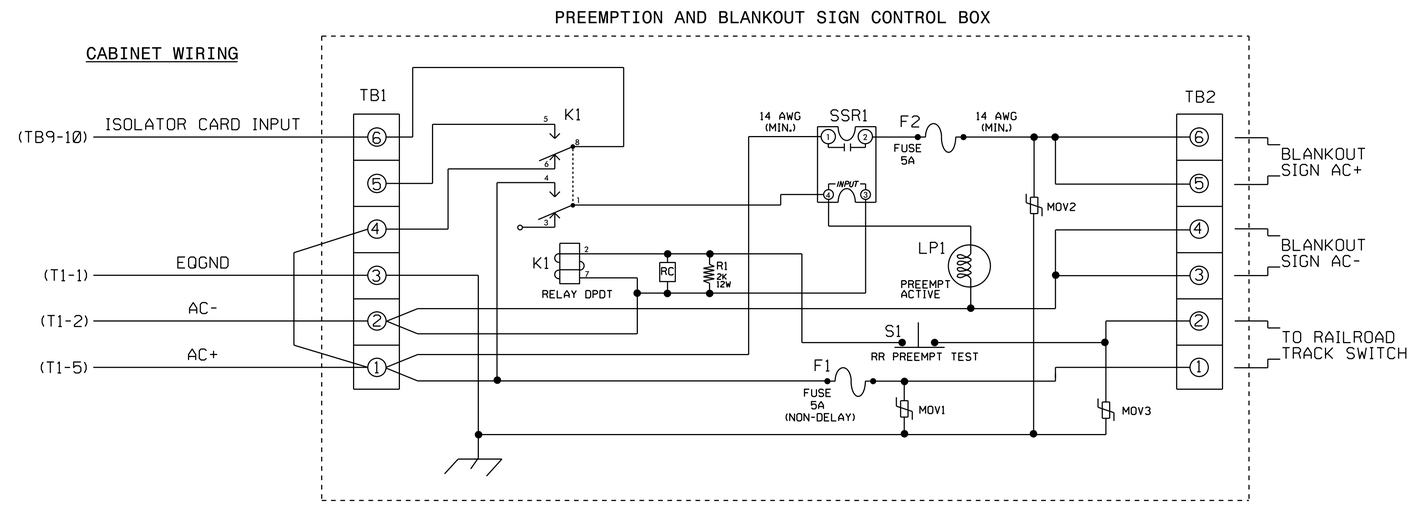

NOTES

1. Relay K1 is shown in the energized (Preempt not active) normal operation state.
2. Relay K1 is a DPDT with 120VAC coil with octal base.
3. Relay SSR1 is a SPST (normally open) Solid State Relay with AC input and AC (25 amp) output.
4. AC Isolator Card shall activate preemption upon removal of AC+ from the input (as shown above). To accomplish this set invert dip switch on AC Isolator Card.
5. IMPORTANT!! A jumper must be added between input file terminals J14-E and J14-K if not already present. Also, terminal TB9-12 (on input panel) shall be connected to AC neutral (jumper may have to be added).

FRONT VIEW

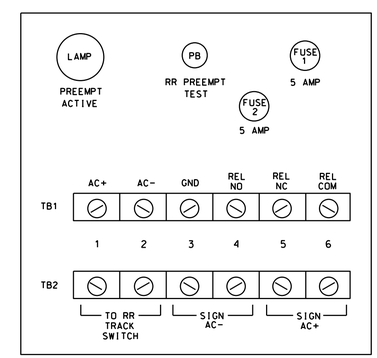

THIS ELECTRICAL DETAIL IS FOR
THE SIGNAL DESIGN: 05-0453
DESIGNED: March 2015
SEALED: 3/30/15
REVISED: N/A

THIS ELECTRICAL DETAIL SUPERSEDES THE DETAIL SEALED ON 04/11/2014

Electrical Detail - Sheet 3 of 3 - Final

ELECTRICAL AND PROGRAMMING DETAILS FOR:

SR 1228 (Chavasse Avenue) at SR 1143 (Williams Street)

Division 5 Vance County Henderson

PLAN DATE:	March 2015	REVIEWED BY:	T. Joyce
PREPARED BY:	B. Simmons	REVIEWED BY:	

REVISIONS	INIT.	DATE

Prepared in the Offices of:
Transportation Mobility and Safety Division
STATE OF NORTH CAROLINA DEPARTMENT OF TRANSPORTATION
Signals Management Section
750 N.Greenfield Pkwy,Garner,NC 27529

SEAL
NORTH CAROLINA PROFESSIONAL SEAL 022013 ENGINEER GEORGE C. BROWN

DocuSigned by: George C. Brown 4/9/2015
F12601E0DBE8434 DATE

SIG. INVENTORY NO. 05-0453

02-APR-2015 09:27
S:*ITSSG\415 Signals\Workgroups\Sig Mon\Simmons\Working Folder\Expedites\050453_sm_ele_xxx.dgn
bsimmons