PROJECT REFERENCE NO.	SHEET NO.
38404	Sig. 5

EDI MODEL 2018ECL-NC CONFLICT MONITOR PROGRAMMING DETAIL

(remove jumpers and set switches as shown)

REMOVE DIODE JUMPERS 2-5, 2-6, 2-9, 2-11, 4-8, 4-10, 4-12, 5-9, 5-11, 6-9, 6-11, 8-10, 8-12, 9-11, and 10-12.

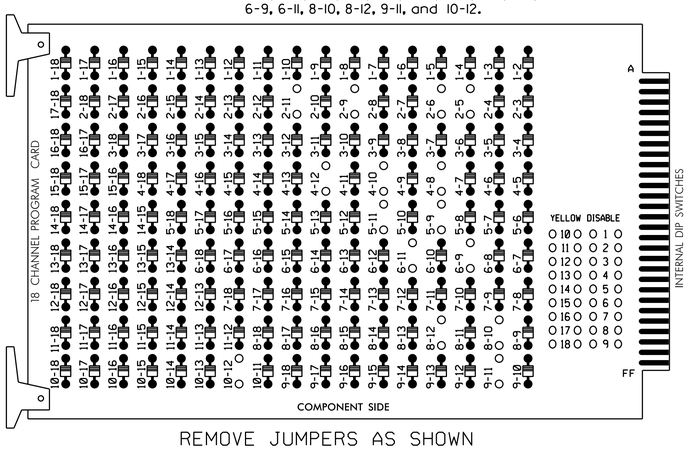

REMOVE JUMPERS AS SHOWN

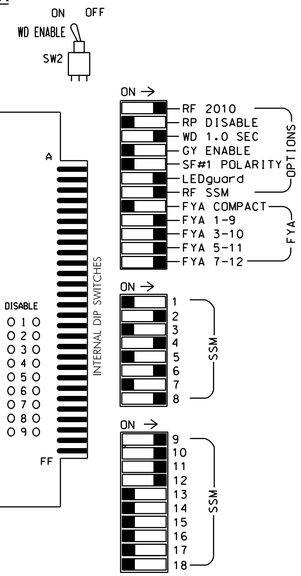

■ = DENOTES POSITION OF SWITCH

NOTES:

1. Card is provided with all diode jumpers in place. Removal of any jumper allows its channels to run concurrently.
2. Ensure jumpers SEL2-SEL5 and SEL9 are present on the monitor board.
3. Ensure that Red Enable is active at all times during normal operation.
4. Connect serial cable from conflict monitor to comm. port 1 of 2070 controller. Ensure conflict monitor communicates with 2070.

NOTES

1. To prevent "flash-conflict" problems, insert red flash program blocks for all unused vehicle load switches in the output file. The installer shall verify that signal heads flash in accordance with the Signal Plans.
2. Program phases 4 and 8 for Dual Entry.
3. Enable Simultaneous Gap-Out for all phases.
4. Program phases 2 and 6 for Start Up In Green.
5. Program phases 2 and 6 for Yellow Flash and overlaps 1 and 2 as Wag Overlaps.

EQUIPMENT INFORMATION

CONTROLLER.....2070
CABINET.....332 W/ AUX
SOFTWARE.....ECONOLITE OASIS
CABINET MOUNT.....BASE
OUTPUT FILE POSITIONS...18 WITH AUX. OUTPUT FILE
LOAD SWITCHES USED.....S2,S5,S7,S8,S11,AUX S1, AUX S2,AUX S4,AUX S5
PHASES USED.....2,4,5,6,8
OVERLAP "A".....2
OVERLAP "B".....8
OVERLAP "C".....5+6
OVERLAP "D".....4

SIGNAL HEAD HOOK-UP CHART

LOAD SWITCH NO.	S1	S2	S3	S4	S5	S6	S7	S8	S9	S10	S11	S12	AUX S1	AUX S2	AUX S3	AUX S4	AUX S5	AUX S6
CMU CHANNEL NO.	1	2	13	3	4	14	5	6	15	7	8	16	9	10	17	11	12	18
PHASE	1	2	2 PED	3	4	4 PED	5	6	6 PED	7	8	8 PED	OLA	OLB	SPARE	OLC	OLD	SPARE
SIGNAL HEAD NO.	NU	21,22	NU	NU	41,42	NU	51★	61,62	NU	NU	82,83	NU	63★	81★	NU	51★	43★	NU
RED		128			101			134			107							
YELLOW		129			102		*	135			108							
GREEN		130			103			136			109							
RED ARROW													A121	A124		A114	A101	
YELLOW ARROW													A122	A125		A115	A102	
FLASHING YELLOW ARROW													A123	A126		A116	A103	
GREEN ARROW							133											

NU = Not Used

* Denotes install load resistor. See load resistor installation detail this sheet.

★ See pictorial of head wiring in detail below.

FYA SIGNAL WIRING DETAIL

(wire signal heads as shown)

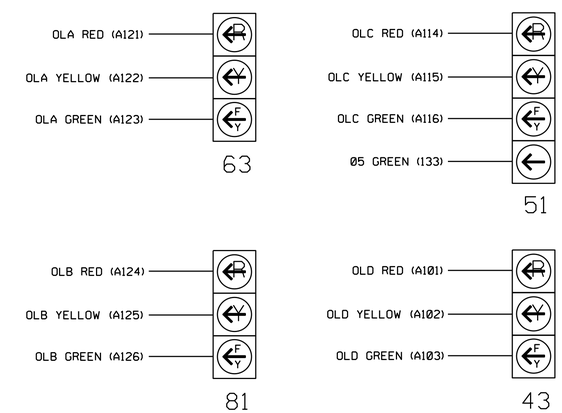

NOTE

The sequence display for signal head 51 requires special logic programming. See sheet 2 for programming instructions.

INPUT FILE POSITION LAYOUT

(front view)

		1	2	3	4	5	6	7	8	9	10	11	12	13	14
FILE "I"	U	SLOT EMPTY	Ø2 2A	SLOT EMPTY	WIRED INPUT ⊗	SLOT EMPTY	Ø4 4A	Ø4 4C	SLOT EMPTY	SLOT EMPTY	SLOT EMPTY	SLOT EMPTY	SLOT EMPTY	SLOT EMPTY	FS DC ISOLATOR
	L		NOT USED				Ø4 4B	NOT USED							ST DC ISOLATOR
FILE "J"	U	Ø5 5A	Ø6 6A	Ø6 6C	SLOT EMPTY	SLOT EMPTY	Ø8 8A	SLOT EMPTY	SLOT EMPTY	SLOT EMPTY	SLOT EMPTY	SLOT EMPTY	SLOT EMPTY	SLOT EMPTY	SLOT EMPTY
	L	NOT USED	Ø6 6B	NOT USED			Ø8 8B								

EX.: 1A, 2A, ETC. = LOOP NO.'S

⊗ Wired Input - Do not populate slot with detector card

FS = FLASH SENSE
ST = STOP TIME

INPUT FILE CONNECTION & PROGRAMMING CHART

LOOP NO.	LOOP TERMINAL	INPUT FILE POS.	PIN NO.	INPUT ASSIGNMENT NO.	DETECTOR NO.	NEMA PHASE	CALL	EXTEND	FULL TIME DELAY	STRETCH TIME	DELAY TIME
2A	TB2-5,6	I2U	39	1	2	2	Y	Y			
4A	TB4-9,10	I6U	41	3	4	4	Y	Y			3
4B	TB4-11,12	I6L	45	7	14	4	Y	Y			10
4C	TB6-1,2	I7U	65	27	34	4	Y	Y			15
5A[1]	TB3-1,2	J1U	55	17	5	5	Y	Y			15
	-	I4U	47	9	22	2	Y	Y			
6A	TB3-5,6	J2U	40	2	6	6	Y	Y			
6B	TB3-7,8	J2L	44	6	16	6	Y	Y			
6C	TB3-9,10	J3U	64	26	36	6	Y	Y			
8A	TB5-9,10	J6U	42	4	8	8	Y	Y			3
8B	TB5-11,12	J6L	46	8	18	8	Y	Y			10

[1] Add jumper from J1-W to I4-W, on rear of input file.

INPUT FILE POSITION LEGEND: J2L
FILE J
SLOT 2
LOWER

LOAD RESISTOR INSTALLATION/REMOVAL DETAIL

(install resistor as shown below)

ACCEPTABLE VALUES

VALUE (ohms)	WATTAGE
1.5K - 1.9K	25W (min)
2.0K - 3.0K	10W (min)

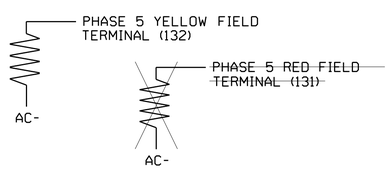

! IMPORTANT: If present, remove load resistor PHASE 5 RED FIELD TERMINAL(131)

THIS ELECTRICAL DETAIL SUPERSEDES THE DETAIL SEALED ON 04/11/2014

THIS ELECTRICAL DETAIL IS FOR THE SIGNAL DESIGN: 05-0548
DESIGNED: March 2015
SEALED: 3/30/15
REVISED: N/A

Electrical Detail - Sheet 1 of 2 - Final

ELECTRICAL AND PROGRAMMING DETAILS FOR:

US 1 Business (Raleigh Road) at SR 1228 (Chavasse Avenue) and Dorsey Avenue

Division 5 | Vance County | Henderson

PLAN DATE: March 2015 | REVIEWED BY:
PREPARED BY: B. Simmons | REVIEWED BY:

REVISIONS | INIT. | DATE

Prepared in the Offices of: Transportation Mobility and Safety Division, Traffic Management Section, Signal Management Section, Department of Transportation, State of North Carolina
750 N.Greenfield Pkwy,Garner,NC 27529

SEAL: NORTH CAROLINA PROFESSIONAL SEAL 022013 ENGINEER GEORGE C. BROWN

DocuSigned by: George C. Brown 3/31/2015
F12601E0GBEB434 DATE

SIG. INVENTORY NO. 05-0548

31-MAR-2015 08:11
S:\TTSSUM\TS\Signals\Workgroups\Sig Man\SSimmons\Working Folder\Expedite\0505548_sm_ele_xxx.dgn
bsimmons