PROJECT REFERENCE NO.	SHEET NO.
38404	Sig. 8

EDI MODEL 2010ECL-NC CONFLICT MONITOR PROGRAMMING DETAIL

(remove jumpers and set switches as shown)

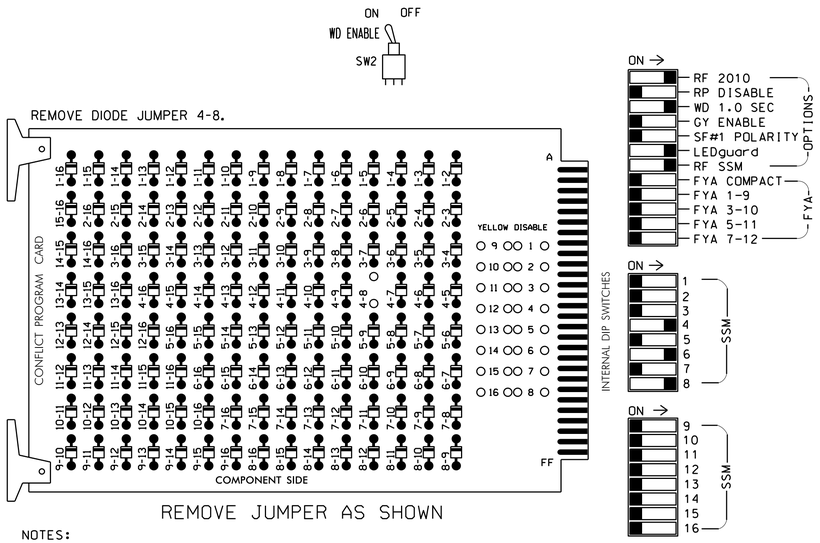

NOTES:

1. Card is provided with all diode jumpers in place. Removal of any jumper allows its channels to run concurrently.
2. Make sure jumpers SEL2-SEL5 are present on the monitor board.

NOTES

1. To prevent "flash-conflict" problems, insert red flash program blocks for all unused vehicle load switches in the output file. The installer shall verify that signal heads flash in accordance with the Signal Plans.
2. To prevent red failures on unused monitor channels, see Red Monitor Board Programming Detail this sheet.
3. ! Restor controller to factory defaults before programming controller. !
4. Enable Simultaneous Gap-Out for all phases.
5. Program phases 4 and 8 for Start Up In Green.
6. Program phases 4 and 8 for Yellow Flash.
7. ! Before implementing signal upgrade disconnect previous pre-emption Equipment connected to cabinet. !

EQUIPMENT INFORMATION

CONTROLLER.....2070
CABINET.....McCAIN/CONTROL TECHNOLOGIES
(DWG.NO.9500-332-NCDOT)
SOFTWARE.....ECONOLITE OASIS 3.03.32E
(or lastest approved version)
CABINET MOUNT.....BASE
OUTPUT FILE POSITIONS...18(12-STD, 6-AUX)
LOAD SWITCHES USED.....S4,S6,S8
PHASES USED.....4,6,8
OVERLAPS.....NONE

SIGNAL HEAD HOOK-UP CHART

LOAD SWITCH NO.	S1	S2	S2P	S3	S4	S4P	S5	S6	S6P	S7	S8	S8P	S9	S10	S11	S12	S13	S14
PHASE	1	2	2 PED	3	4	4 PED	5	6	6 PED	7	8	8 PED	OLA	OLB	SPARE	OLC	OLD	SPARE
SIGNAL HEAD NO.	NU	NU	NU	NU	41,42	NU	NU	61,62	NU	NU	81,82	NU	NU	NU	NU	NU	NU	NU
RED					101			134			107							
YELLOW					102			135			108							
GREEN					103			136			109							
RED ARROW																		
YELLOW ARROW																		
GREEN ARROW																		

NU = Not Used

INPUT FILE POSITION LAYOUT

(front view)

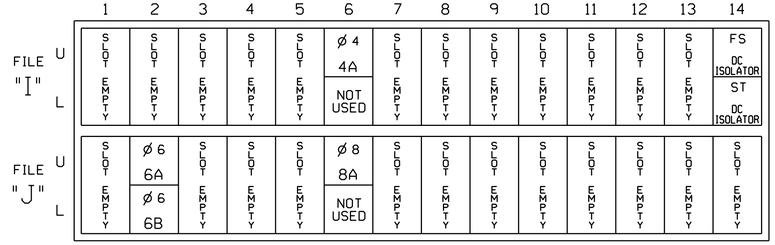

EX.: 1A, 2A, ETC. = LOOP NO.'S

FS = FLASH SENSE
ST = STOP TIME

INPUT FILE CONNECTION & PROGRAMMING CHART

LOOP NO.	LOOP TERMINAL	INPUT FILE POS.	PIN NO.	INPUT ASSIGNMENT NO.	DETECTOR NO.	NEMA PHASE	CALL	EXTEND	FULL TIME DELAY	STRETCH TIME	DELAY TIME
4A	TB4-9,10	I6U	41	3	4	4	Y	Y			
6A	TB3-5,6	J2U	40	2	6	6	Y	Y			
6B	TB3-7,8	J2L	44	6	16	6	Y	Y			
8A	TB5-9,10	J6U	42	4	8	8	Y	Y			

INPUT FILE POSITION LEGEND: J2L
FILE J
SLOT 2
LOWER

RED MONITOR BOARD PROGRAMMING

(position jumpers as shown below)

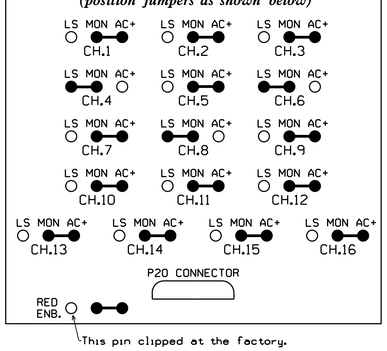

THIS ELECTRICAL DETAIL IS FOR THE SIGNAL DESIGN: 05-0453T
DESIGNED: March 2015
SEALED: 3/30/15
REVISED: N/A

THIS ELECTRICAL DETAIL SUPERSEDES THE DETAIL SEALED ON 04/11/2014

Electrical Detail - Temporary

ELECTRICAL AND PROGRAMMING DETAILS FOR:

SR 1228 (Chavasse Avenue)
at
SR 1143 (Williams Street)

Division 5 | Vance County | Henderson

PLAN DATE: March 2015 | REVIEWED BY: T. Joyce
PREPARED BY: B. Simmons | REVIEWED BY:

REVISIONS | INIT. | DATE

Prepared in the Offices of:
Transportation Mobility and Safety Division
Signal Management Section
750 N.Greenfield Pkwy,Garner,NC 27529

SEAL
NORTH CAROLINA PROFESSIONAL SEAL 022013 ENGINEER GEORGE C. BROWN
DocuSigned by: George C. Brown 4/9/2015
F12601E0B8E834
DATE
SIG. INVENTORY NO. 05-0453T

02-APR-2015 09:25
S:\TSG\ITS\Signals\Workgroups\Sig Man\SImmons\Working Folder\Expedite\050453_sm.ele.xxx.dgn
bsimmons