This electronic collection of documents is provided for the convenience of the user and is Not a Certified Document –

The documents contained herein were originally issued and sealed by the individuals whose names and license numbers appear on each page, on the dates appearing with their signature on that page.
This file or an individual page shall not be considered a certified document.

DocuSign Envelope ID: 3FD7AED5-47E6-493E-A9A6-B34B191DB411

09/08/99

PROJECT: 17BP.5.R.58

CONTRACT:

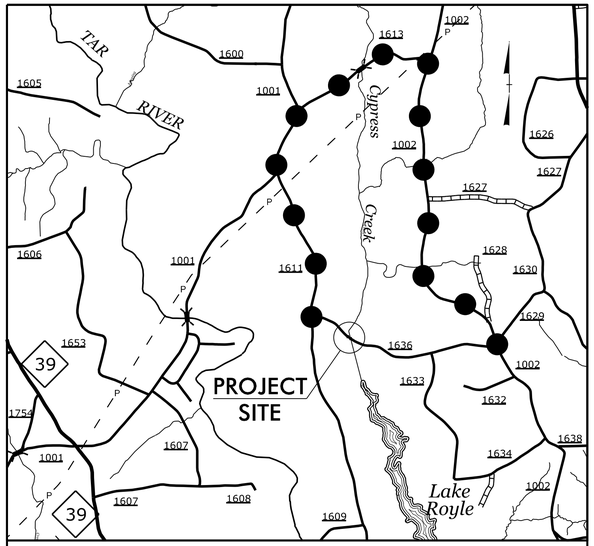

VICINITY MAP FOR 17BP.5.R.58

OFFSITE DETOUR ROUTE

See Sheet 1-A For Index of Sheets
See Sheet 1-B For Conventional Symbols

STATE OF NORTH CAROLINA
DIVISION OF HIGHWAYS

FRANKLIN COUNTY

LOCATION: BRIDGE NO. 71 OVER CYPRESS CREEK ON SR 1636 (SYKES ROAD)

TYPE OF WORK: GRADING, DRAINAGE, PAVING, AND STRUCTURE

STATE	STATE PROJECT REFERENCE NO.	SHEET NO.	TOTAL SHEETS
N.C.	17BP.5.R.58	1	

STATE PROJ. NO.	F.A. PROJ. NO.	DESCRIPTION
17BP.5.R.58	N/A	PE
17BP.5.R.58	N/A	ROW & UTLITY
17BP.5.R.58	N/A	CONSTRUCTION

NAD 83/
NA 2011

4

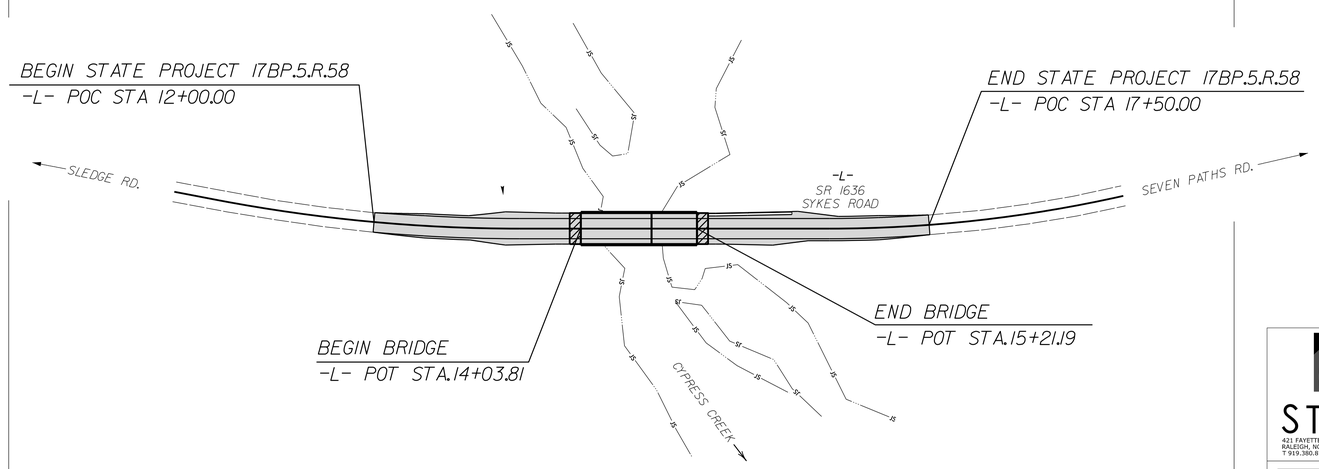

STEWART
421 FAYETTEVILLE ST, STE 400
RALEIGH, NC 27601
T 919.380.8750
Firm License #: C-1051
www.stewartinc.com
PROJECT #:H14003.00

NC FIRM LICENSE No: F-1148
1151 SE Cary Parkway, Suite 101
Cary, NC 27518
(919) 557-0929
ECOLOGICAL ENGINEERING

DOCUMENT NOT CONSIDERED FINAL UNLESS ALL SIGNATURES COMPLETED

GRAPHIC SCALES

50 25 0 50 100
PLANS

50 25 0 50 100
PROFILE (HORIZONTAL)

10 5 0 10 20
PROFILE (VERTICAL)

DESIGN DATA

ADT = 600
V = 55 MPH
CLASS = RURAL LOCAL

SUBREGIONAL TIER

PROJECT LENGTH

LENGTH ROADWAY STATE PROJECT 17BP.5.R.58	=	0.082 mi.
LENGTH STRUCTURES STATE PROJECT 17BP.5.R.58	=	0.022 mi.
TOTAL LENGTH STATE PROJECT 17BP.5.R.58	=	0.104 mi.

Prepared in the Office of:

STEWART

For
NORTH CAROLINA
DEPARTMENT OF TRANSPORTATION

2012 STANDARD SPECIFICATIONS

RIGHT OF WAY DATE:
JUNE 22, 2015

RIGHT OF WAY COMPLETE:
?????

LETTING DATE:
JUNE 22, 2016

ANDY YOUNG, PE
PROJECT ENGINEER

MICHAEL BURNS, EI
PROJECT DESIGN ENGINEER

LISA GILCHRIST, EI
NCDOT CONTACT

HYDRAULICS ENGINEER

NORTH CAROLINA PROFESSIONAL SEAL 039102 ENGINEER BRANDON T. BARHAM

DocuSigned by:
Brandon T. Barham
SIGNATURE:
1/11/2016
P.E.

ROADWAY DESIGN ENGINEER

NORTH CAROLINA PROFESSIONAL SEAL 34407 ENGINEER ANDREW P. YOUNG

DocuSigned by:
Andrew P. Young
SIGNATURE:
1/11/2016
P.E.

STATE OF NORTH CAROLINA DEPARTMENT OF TRANSPORTATION

1/7/2016
:\Proj\34007I_RDY_tsh.dgn
USER:ayoung

DocuSign Envelope ID: 3FD7AED5-47E6-493E-A9A6-B34B191DB411

8/17/99

STATE OF NORTH CAROLINA
DIVISION OF HIGHWAYS

INDEX OF SHEETS, GENERAL NOTES, AND LIST OF STANDARD DRAWINGS

PROJECT REFERENCE NO.	SHEET NO.
17BP.5.R.58	1-A

ROADWAY DESIGN ENGINEER

NORTH CAROLINA PROFESSIONAL SEAL 34407 ENGINEER ANDREW P. YOUNG

DocuSigned 1/11/2016
Andrew P. Young
EE31D9DDDE5A4EE...

Firm License No. C-1205
421 Fayetteville St.
Suite 400
Raleigh, NC 27601
P: 919.380.8750
www.stewartinc.com

STEWART

DOCUMENT NOT CONSIDERED FINAL UNLESS ALL SIGNATURES COMPLETED

INDEX OF SHEETS

SHEET NUMBER	SHEET
1	TITLE SHEET
1-A	INDEX OF SHEETS, GENERAL NOTES, AND LIST OF STANDARD DRAWINGS
1-B	CONVENTIONAL SYMBOLS
1C-1	SURVEY CONTROL DATA SHEET
2A-1	PAVEMENT SCHEDULE, TYPICAL SECTIONS, AND WEDGING DETAILS
2C-1	GUARDRAIL ANCHOR DETAIL
2C-2	EXTRA LENGTH GUARDRAIL POSTS
2G-1	ROCK PLATING DETAIL
3B-1	ROADWAY SUMMARY
3D-1	DRAINAGE SUMMARY
3G-1	GEOTECHNICAL SUMMARY
4	PLAN SHEET
5	PROFILE SHEET
TMP-1 THRU TMP-3	TRAFFIC CONTROL PLANS
PMP-1	PAVEMENT MARKING PLANS
EC-1 THRU EC-05	EROSION CONTROL PLANS
RF-1	REFORESTATION PLANS
X-1A	CROSS-SECTION SUMMARY SHEET
X-1 THRU X-3	CROSS-SECTIONS
S-1 THRU S-19	STRUCTURE PLANS

EFF. 01-17-2012
REV. 10-30-2012

2012 ROADWAY ENGLISH STANDARD DRAWINGS

The following Roadway Standards as appear in "Roadway Standard Drawings" Highway Design Branch - N. C. Department of Transportation - Raleigh, N. C., Dated January, 2012 are applicable to this project and by reference hereby are considered a part of these plans:

STD.NO.	TITLE
DIVISION 2 - EARTHWORK	
200.03	Method of Clearing - Method III
225.02	Guide for Grading Subgrade - Secondary and Local
225.04	Method of Obtaining Superelevation - Two Lane Pavement
DIVISION 3 - PIPE CULVERTS	
300.01	Method of Pipe Installation
DIVISION 4 - MAJOR STRUCTURES	
422.10	Reinforced Bridge Approach Fills
DIVISION 5 - SUBGRADE, BASES AND SHOULDERS	
560.01	Method of Shoulder Construction - High Side of Superelevated Curve - Method I
DIVISION 8 - INCIDENTALS	
806.01	Concrete Right-of-Way Marker
806.02	Granite Right-of-Way Marker
840.00	Concrete Base Pad for Drainage Structures
840.25	Anchors for Frames - Brick/Concrete/Precast Concrete
840.29	Frames and Narrow Slot Flat Grates
840.35	Traffic Bearing Grated Drop Inlet - for Cast Iron Double Frame and Grates
840.46	Traffic Bearing Precast Drainage Structure
846.01	Concrete Curb, Gutter and Curb & Gutter
846.04	Drop Inlet Installation in Shoulder Berm Gutter
862.01	Guardrail Placement
862.02	Guardrail Installation
876.02	Guide for Rip Rap at Pipe Outlets
876.04	Drainage Ditches With Class 'B' Rip Rap

GENERAL NOTES:

2012 SPECIFICATIONS
EFFECTIVE: 01-17-2012
REVISED: 10-31-2014

GRADE LINE:
GRADING AND SURFACING:

THE GRADE LINES SHOWN DENOTE THE FINISHED ELEVATION OF THE PROPOSED SURFACING AT GRADE POINTS SHOWN ON THE TYPICAL SECTIONS. GRADE LINES MAY BE ADJUSTED AT THEIR BEGINNING AND ENDING AND AT STRUCTURES AS DIRECTED BY THE ENGINEER IN ORDER TO SECURE A PROPER TIE-IN.

CLEARING:

CLEARING ON THIS PROJECT SHALL BE PERFORMED TO THE LIMITS ESTABLISHED BY METHOD III.

SUPERELEVATION:

ALL CURVES ON THIS PROJECT SHALL BE SUPERELEVATED IN ACCORDANCE WITH STD. NO. 225.04 USING THE RATE OF SUPERELEVATION AND RUNOFF SHOWN ON THE PLANS. SUPERELEVATION IS TO BE REVOLVED ABOUT THE GRADE POINTS SHOWN ON THE TYPICAL SECTIONS.

SHOULDER CONSTRUCTION:

ASPHALT, EARTH, AND CONCRETE SHOULDER CONSTRUCTION ON THE HIGH SIDE OF SUPERELEVATED CURVES SHALL BE IN ACCORDANCE WITH STD. NO. 560.01

GUARDRAIL:

THE GUARDRAIL LOCATIONS SHOWN ON THE PLANS MAY BE ADJUSTED DURING CONSTRUCTION AS DIRECTED BY THE ENGINEER. THE CONTRACTOR SHOULD CONSULT WITH THE ENGINEER PRIOR TO ORDERING GUARDRAIL MATERIAL.

END BENTS:

THE SURVEYOR SHALL CHECK THE STRUCTURE END BENT PLANS, DETAILS, AND CROSS-SECTION PRIOR TO SETTING OF THE SLOPE STAKES FOR THE EMBANKMENT OR EXCAVATION APPROACHING A BRIDGE.

RIGHT-OF-WAY MARKERS:

ALL RIGHT-OF-WAY MARKERS ON THIS PROJECT SHALL BE PLACED BY CONTRACT.

ROCK:

ROCK IS ANTICIPATED BETWEEN STA. 12+50 TO STA. 13+50. BLASTING MAY BE REQUIRED FOR EXCAVATION ON THE PROJECT. SEE SECTION 220 OF THE STANDARD SPECIFICATIONS AND IF APPLICABLE, ROCK BLASTING PROVISION.

1/7/2016
17BP.5.R.58_340071_RDY_PSH_1A.dgn
USER:Rdyoung

DocuSign Envelope ID: 3FD7AED5-47E6-493E-A9A6-B34B191DB411

02/03/15

PROJECT REFERENCE NO.	SHEET NO.
17BP.5.R.58	1-B

Note: Not to Scale

S.U.E. = Subsurface Utility Engineering

STATE OF NORTH CAROLINA
DIVISION OF HIGHWAYS

CONVENTIONAL PLAN SHEET SYMBOLS

BOUNDARIES AND PROPERTY:

- State Line
- County Line
- Township Line
- City Line
- Reservation Line
- Property Line
- Existing Iron Pin — EIP
- Property Corner
- Property Monument — ECM
- Parcel/Sequence Number — 123
- Existing Fence Line
- Proposed Woven Wire Fence
- Proposed Chain Link Fence
- Proposed Barbed Wire Fence
- Existing Wetland Boundary — WLB
- Proposed Wetland Boundary — WLB
- Existing Endangered Animal Boundary — EAB
- Existing Endangered Plant Boundary — EPB
- Existing Historic Property Boundary — HPB
- Known Soil Contamination: Area or Site
- Potential Soil Contamination: Area or Site

BUILDINGS AND OTHER CULTURE:

- Gas Pump Vent or U/G Tank Cap
- Sign — S
- Well — W
- Small Mine
- Foundation
- Area Outline
- Cemetery
- Building
- School
- Church
- Dam

HYDROLOGY:

- Stream or Body of Water
- Hydro, Pool or Reservoir
- Jurisdictional Stream — JS
- Buffer Zone 1 — BZ 1
- Buffer Zone 2 — BZ 2
- Flow Arrow
- Disappearing Stream
- Spring
- Wetland
- Proposed Lateral, Tail, Head Ditch — FLOW
- False Sump

RAILROADS:

- Standard Gauge — CSX TRANSPORTATION
- RR Signal Milepost — MILEPOST 35
- Switch — SWITCH
- RR Abandoned
- RR Dismantled

RIGHT OF WAY:

- Baseline Control Point
- Existing Right of Way Marker
- Existing Right of Way Line
- Proposed Right of Way Line — RW
- Proposed Right of Way Line with Iron Pin and Cap Marker — RW
- Proposed Right of Way Line with Concrete or Granite R/W Marker — RW
- Proposed Control of Access Line with Concrete C/A Marker — CA
- Existing Control of Access — CA
- Proposed Control of Access — CA
- Existing Easement Line — E
- Proposed Temporary Construction Easement — E
- Proposed Temporary Drainage Easement — TDE
- Proposed Permanent Drainage Easement — PDE
- Proposed Permanent Drainage / Utility Easement — DUE
- Proposed Permanent Utility Easement — PUE
- Proposed Temporary Utility Easement — TUE
- Proposed Aerial Utility Easement — AUE
- Proposed Permanent Easement with Iron Pin and Cap Marker

ROADS AND RELATED FEATURES:

- Existing Edge of Pavement
- Existing Curb
- Proposed Slope Stakes Cut — C
- Proposed Slope Stakes Fill — F
- Proposed Curb Ramp — CR
- Existing Metal Guardrail
- Proposed Guardrail
- Existing Cable Guiderail
- Proposed Cable Guiderail
- Equality Symbol
- Pavement Removal

VEGETATION:

- Single Tree
- Single Shrub
- Hedge
- Woods Line
- Orchard
- Vineyard — Vineyard

EXISTING STRUCTURES:

MAJOR:

- Bridge, Tunnel or Box Culvert — CONC
- Bridge Wing Wall, Head Wall and End Wall — CONC WW

MINOR:

- Head and End Wall — CONC HW
- Pipe Culvert
- Footbridge
- Drainage Box: Catch Basin, DI or JB — CB
- Paved Ditch Gutter
- Storm Sewer Manhole — S
- Storm Sewer — S

UTILITIES:

POWER:

- Existing Power Pole
- Proposed Power Pole
- Existing Joint Use Pole
- Proposed Joint Use Pole
- Power Manhole — P
- Power Line Tower
- Power Transformer
- U/G Power Cable Hand Hole
- H-Frame Pole
- Recorded U/G Power Line — P
- Designated U/G Power Line (S.U.E.*) — P

TELEPHONE:

- Existing Telephone Pole
- Proposed Telephone Pole
- Telephone Manhole — T
- Telephone Booth
- Telephone Pedestal — T
- Telephone Cell Tower
- U/G Telephone Cable Hand Hole — HH
- Recorded U/G Telephone Cable — T
- Designated U/G Telephone Cable (S.U.E.*) — T
- Recorded U/G Telephone Conduit — TC
- Designated U/G Telephone Conduit (S.U.E.*) — TC
- Recorded U/G Fiber Optics Cable — T FO
- Designated U/G Fiber Optics Cable (S.U.E.*) — T FO

WATER:

- Water Manhole — W
- Water Meter
- Water Valve
- Water Hydrant
- Recorded U/G Water Line — W
- Designated U/G Water Line (S.U.E.*) — W
- Above Ground Water Line — A/G Water

TV:

- TV Satellite Dish
- TV Pedestal — C
- TV Tower
- U/G TV Cable Hand Hole — HH
- Recorded U/G TV Cable — TV
- Designated U/G TV Cable (S.U.E.*) — TV
- Recorded U/G Fiber Optic Cable — TV FO
- Designated U/G Fiber Optic Cable (S.U.E.*) — TV FO

GAS:

- Gas Valve
- Gas Meter
- Recorded U/G Gas Line — G
- Designated U/G Gas Line (S.U.E.*) — G
- Above Ground Gas Line — A/G Gas

SANITARY SEWER:

- Sanitary Sewer Manhole
- Sanitary Sewer Cleanout
- U/G Sanitary Sewer Line — SS
- Above Ground Sanitary Sewer — A/G Sanitary Sewer
- Recorded SS Forced Main Line — FSS
- Designated SS Forced Main Line (S.U.E.*) — FSS

MISCELLANEOUS:

- Utility Pole
- Utility Pole with Base
- Utility Located Object
- Utility Traffic Signal Box — S
- Utility Unknown U/G Line — ?UTL
- U/G Tank; Water, Gas, Oil
- Underground Storage Tank, Approx. Loc. — UST
- A/G Tank; Water, Gas, Oil
- Geoenvironmental Boring
- U/G Test Hole (S.U.E.*)
- Abandoned According to Utility Records — AATUR
- End of Information — E.O.I.

DocuSign Envelope ID: 3FD7AED5-47E6-493E-A9A6-B34B191DB411

9/15/15

PROJECT REFERENCE NO.	SHEET NO.
17BP.5.R.58	1C
Location and Surveys	

SURVEY CONTROL SHEET 34-0071

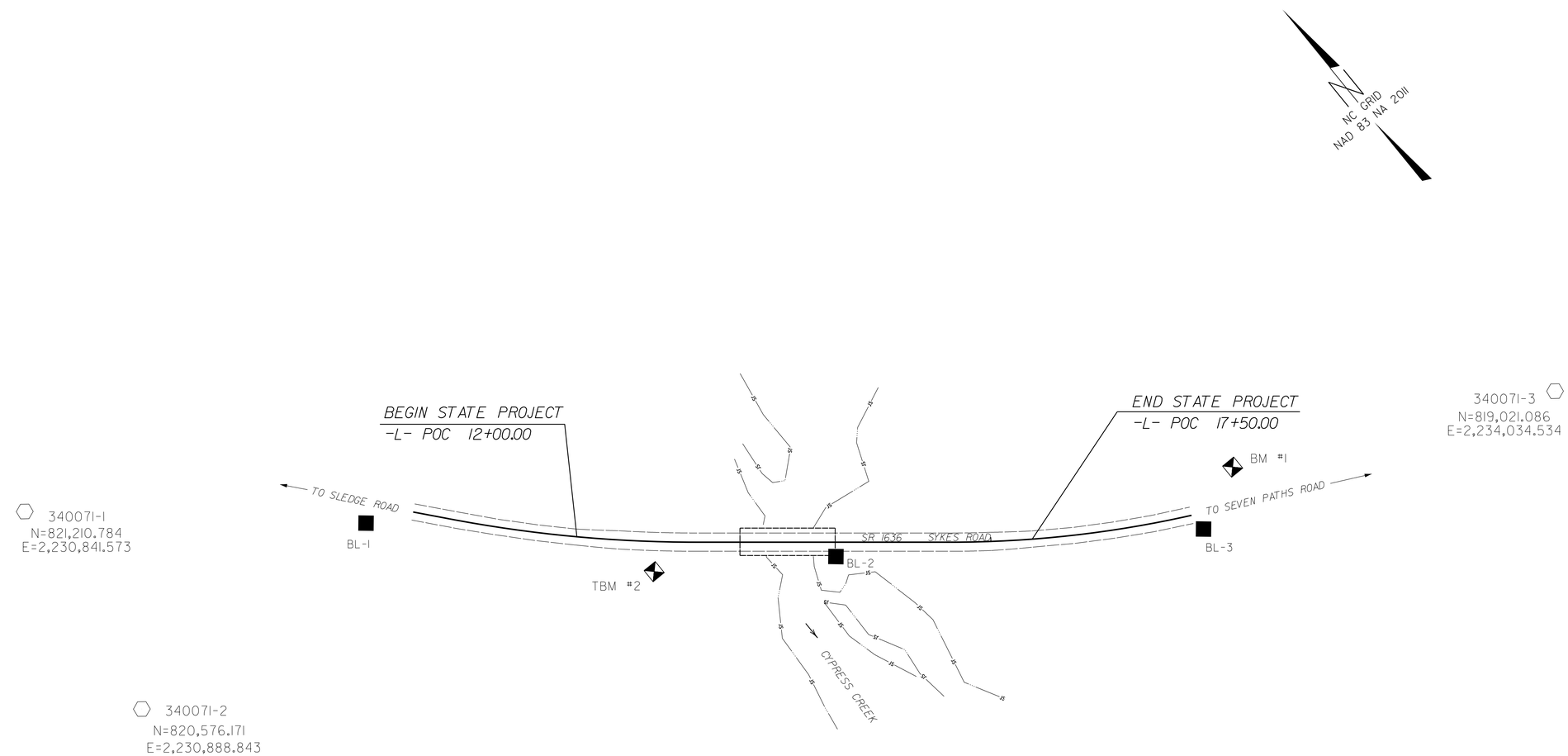

BASELINE
BL

POINT	NORTH	EAST	ELEVATION	L STATION	OFFSET
BL1	819886.2957	2232556.9292	198.17	OUTSIDE PROJECT LIMITS	
BL2	819496.4698	2232970.9760	193.11	15+12.84	17.46 RT
BL3	819241.6421	2233335.8750	200.55	OUTSIDE PROJECT LIMITS	

BENCH MARK DATA

BM1 ELEVATION = 201.00
N 819293 E 2233377
L STATION 10+00.00
S 53°30'17" E DIST 954'
RR SPIKE IN 30" OAK

BM2 ELEVATION = 198.63
N 819619 E 2232790
L STATION 12+96 38' RT
RR SPIKE IN 18" PINE

DATUM DESCRIPTION

THE LOCALIZED COORDINATE SYSTEM DEVELOPED FOR THIS PROJECT IS BASED ON THE STATE PLANE COORDINATES ESTABLISHED BY NCDOT FOR MONUMENT "340071-2" WITH NAD 83/NA 2011 STATE PLANE GRID COORDINATES OF NORTHING: 820576.171(ft) EASTING: 2230888.843(ft) ELEVATION: 291.34(ft)
THE AVERAGE COMBINED GRID FACTOR USED ON THIS PROJECT (GROUND TO GRID) IS: 0.999950492
THE N.C. LAMBERT GRID BEARING AND LOCALIZED HORIZONTAL GROUND DISTANCE FROM "340071-2" TO -L- 12+00 IS S 65° 02' 18" E 2,046.16'
ALL LINEAR DIMENSIONS ARE LOCALIZED HORIZONTAL DISTANCES
VERTICAL DATUM USED IS NAVD 88

GEOID G12NC

NOTE: DRAWING NOT TO SCALE

NOTES:

SITE CALIBRATION INFORMATION HAS NOT BEEN PROVIDED FOR THIS PROJECT. IF FURTHER INFORMATION IS NEEDED, PLEASE CONTACT THE LOCATION AND SURVEYS UNIT.

INDICATES GEODETIC CONTROL MONUMENTS USED OR SET FOR HORIZONTAL PROJECT CONTROL BY THE NCDOT LOCATION AND SURVEYS UNIT.

PROJECT CONTROL ESTABLISHED USING GLOBAL POSITIONING SYSTEM.

1/7/2016
...\Roadway\Proj\340071_ls_lc.dgn
$$$$RSCURRIN$$$$

DocuSign Envelope ID: 2250A66C-31D5-4664-9FF0-45EC5D2B33A5

PROJECT REFERENCE NO.	SHEET NO.
17BP.5.R.58	2A-1

ROADWAY DESIGN ENGINEER
NORTH CAROLINA PROFESSIONAL SEAL 34407 ENGINEER ANDREW P. YOUNG
DocuSign 1/20/2016
Andrew P. Young

PAVEMENT DESIGN ENGINEER
NORTH CAROLINA PROFESSIONAL SEAL 22896 ENGINEER CLARK S. MORRISON
DocuSign 1/20/2016
Clark Morrison

STEWART
Firm License No. C-1051
421 Fayetteville St.
Suite 400
Raleigh, NC 27601
T 919.380.8750
www.stewartinc.com

DOCUMENT NOT CONSIDERED FINAL UNLESS ALL SIGNATURES COMPLETED

PAVEMENT SCHEDULE

(FINAL PAVEMENT DESIGN)

C1	PROP. APPROX. 1½″ ASPHALT CONCRETE SURFACE COURSE, TYPE S9.5B, AT AN AVERAGE RATE OF 168 LBS. PER SQ. YD.
C2	PROP. VAR. DEPTH ASPHALT CONCRETE SURFACE COURSE, TYPE S9.5B, AT AN AVERAGE RATE OF 112 LBS. PER SQ. YD. PER 1″ DEPTH. TO BE PLACED IN LAYERS NOT TO EXCEED 2″ IN DEPTH.
D1	PROP. APPROX. 3½″ ASPHALT CONCRETE INTERMEDIATE COURSE, TYPE I19.0B, AT AN AVERAGE RATE OF 399 LBS. PER SQ. YD.
E1	PROP. APPROX. 4″ ASPHALT CONCRETE BASE COURSE, TYPE B25.0B, AT AN AVERAGE RATE OF 456 LBS. PER SQ. YD.
R1	PROPOSED SHOULDER BERM GUTTER
T	EARTH MATERIAL.
W	WEDGING (SEE THIS SHEET FOR WEDGING DETAIL)

NOTE: PAVEMENT EDGE SLOPES ARE 1:1 UNLESS SHOWN OTHERWISE.

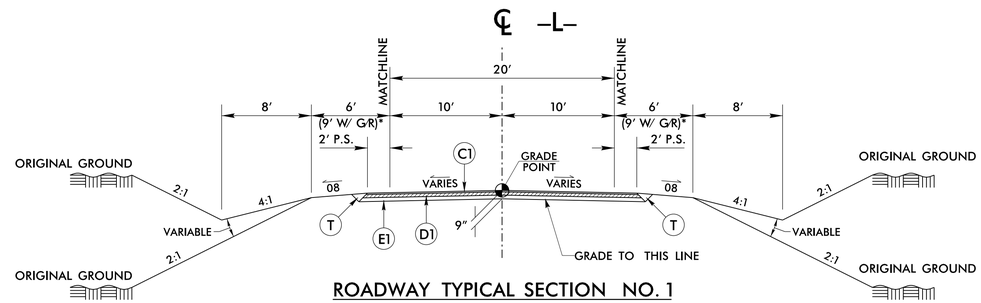

ROADWAY TYPICAL SECTION NO. 1

USE ROADWAY TYPICAL SECTION NO. 1

–L– STA. 12+00.00 TO –L– STA. 14+03.81 (BEGIN BRIDGE)

–L– STA. 15+21.19 (END BRIDGE) TO –L– STA. 17+50.00

*UTILITZE 8–FOOT TOTAL SHOULDER WIDTH FROM –L– STA. 15+27.00 RT TO –L– STA. 15+75.00 RT

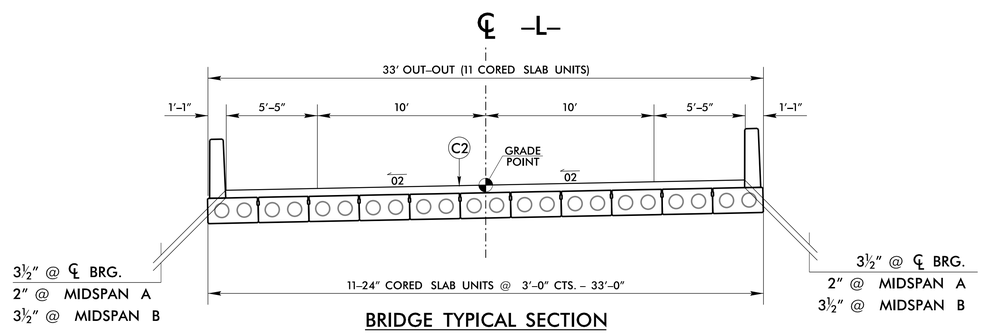

BRIDGE TYPICAL SECTION

USE BRIDGE TYPICAL SECTION

–L– STA. 14+03.81 TO –L– STA. 15+21.19

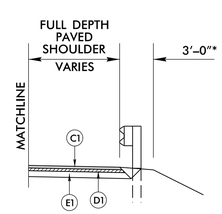

* 2′–0″ FROM –L– STA. 15+20.00 RT TO –L– STA. 15+70.00 RT

DETAIL SHOWING PAVING TO THE FACE OF GUARDRAIL

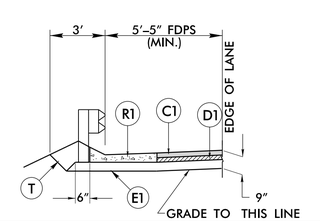

DETAIL SHOWING GUARDRAIL WITH SHOULDER BERM GUTTER

–L– STA. 15+32.19 TO –L– STA. 16+14.00 LT

6/2/99
1/19/2016
...\R-5700_340071_RDY_typ.dgn
USER:Rbowling

DocuSign Envelope ID: 3FD7AED5-47E6-493E-A9A6-B34B191DB411

PROJECT REFERENCE NO.	SHEET NO.
17BP.5.R.58	2C-1

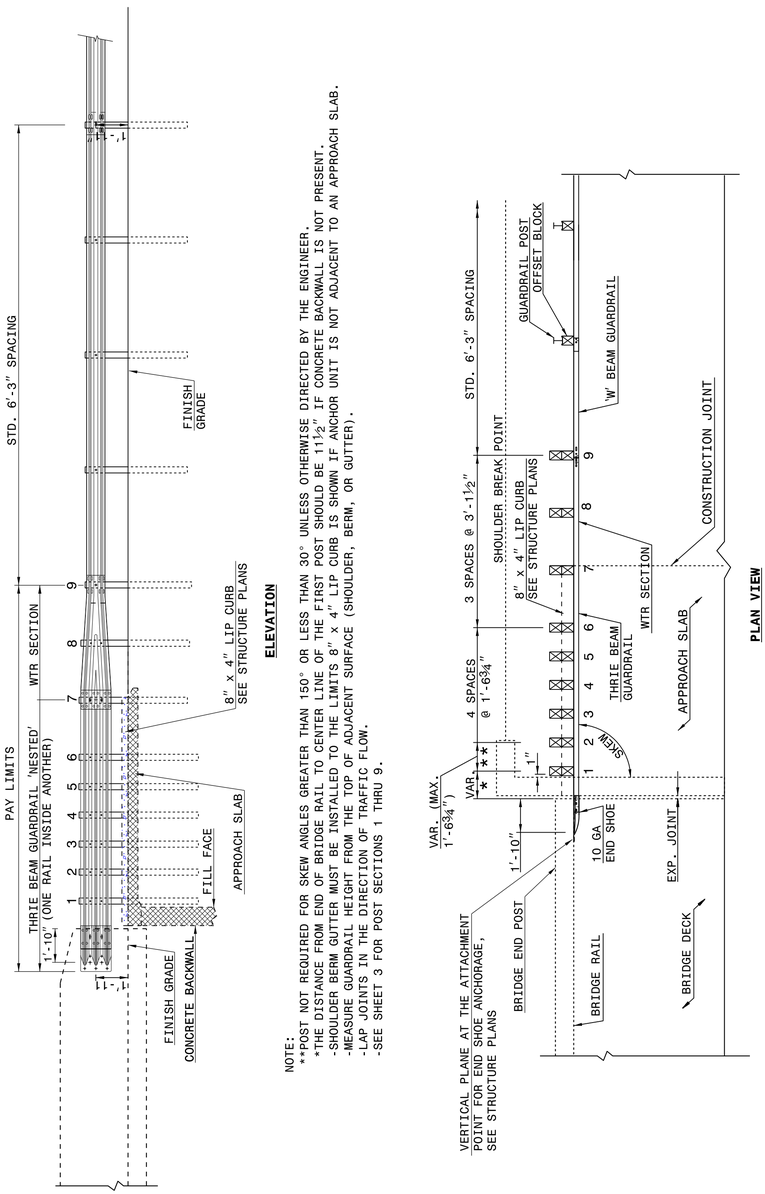

NOTE:
- **POST NOT REQUIRED FOR SKEW ANGLES GREATER THAN 150° OR LESS THAN 30° UNLESS OTHERWISE DIRECTED BY THE ENGINEER.
- *THE DISTANCE FROM END OF BRIDGE RAIL TO CENTER LINE OF THE FIRST POST SHOULD BE 1½" IF CONCRETE BACKWALL IS NOT PRESENT.
- SHOULDER BERM GUTTER MUST BE INSTALLED TO THE LIMITS 8" x 4" LIP CURB IF ANCHOR UNIT IS NOT ADJACENT TO AN APPROACH SLAB.
- MEASURE GUARDRAIL HEIGHT FROM THE TOP OF ADJACENT SURFACE (SHOULDER, BERM, OR GUTTER).
- LAP JOINTS IN THE DIRECTION OF TRAFFIC FLOW.
- SEE SHEET 3 FOR POST SECTIONS 1 THRU 9.

GUARDRAIL ANCHOR UNIT, TYPE III FOR ATTACHMENT TO RAIL ON BRIDGE - SUB REGIONAL TIER

STATE OF NORTH CAROLINA DEPT. OF TRANSPORTATION DIVISION OF HIGHWAYS RALEIGH, N.C.

ENGLISH DETAIL DRAWING FOR
STRUCTURE ANCHOR UNITS
GUARDRAIL ANCHOR UNIT, TYPE III FOR ATTACHMENT TO RAIL ON BRIDGE - SUB REGIONAL TIER

SHEET 2 OF 7
862d03

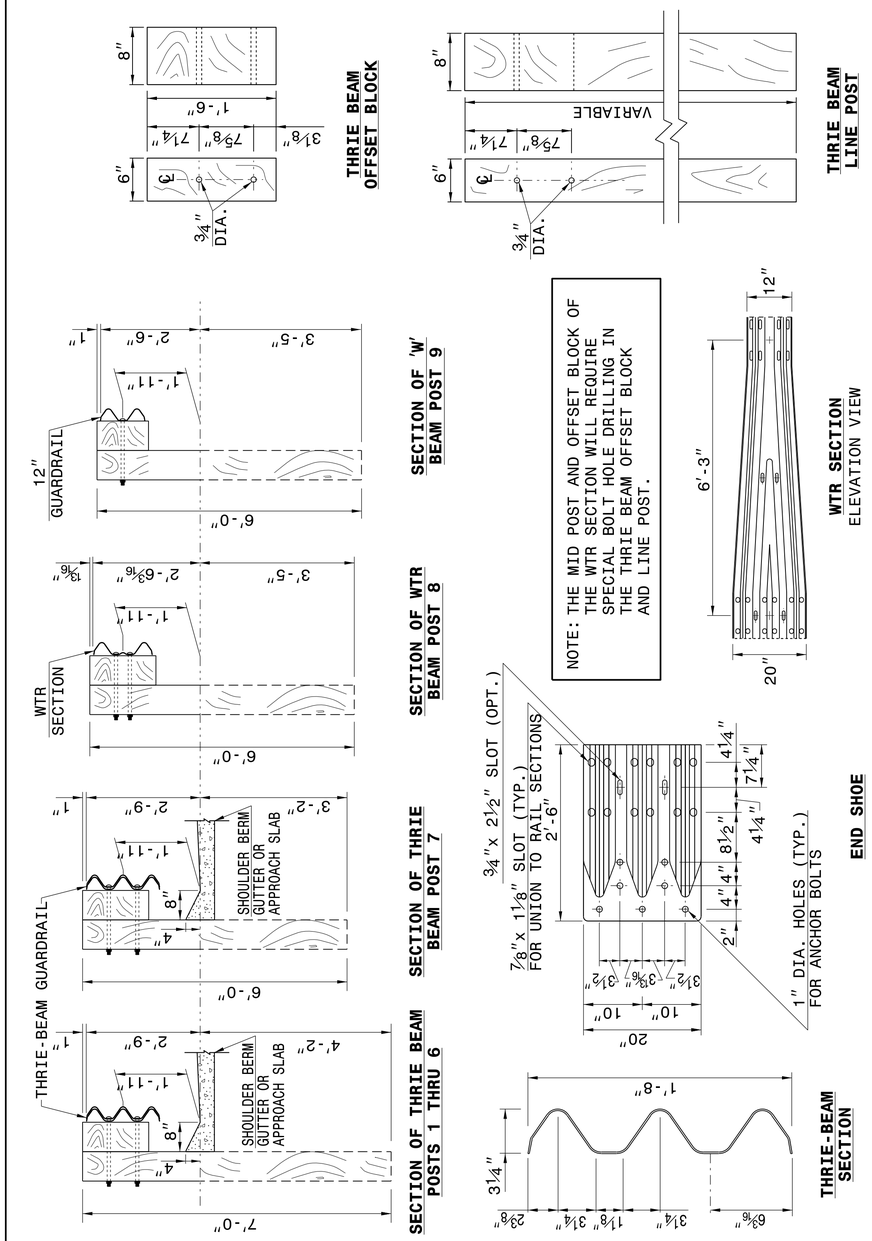

STATE OF NORTH CAROLINA DEPT. OF TRANSPORTATION DIVISION OF HIGHWAYS RALEIGH, N.C.

ENGLISH DETAIL DRAWING FOR
STRUCTURE ANCHOR UNITS
GUARDRAIL ANCHOR UNIT, TYPE III

SHEET 3 OF 7
862d03

NORTH CAROLINA PROFESSIONAL SEAL 022966 ENGINEER Joel S. Howerton
1/11/2016
DocuSigned by: Joel Howerton 873F3D17DCDDC45F...

DOCUMENT NOT CONSIDERED FINAL UNLESS ALL SIGNATURES COMPLETED

CONTRACT STANDARDS AND DEVELOPMENT UNIT
Office 919-707-6950 FAX 919-250-4119

SEE TITLE BLOCK

ORIGINAL BY: J HOWERTON DATE: 06-22-12
MODIFIED BY: DATE:
CHECKED BY: DATE:
FILE SPEC.:

$$$$$SYTME$$$$
$$$$$SYTNAME$$$$
$$$$$DGNNAME$$$$
$$$$$DGNSPEC$$$$

DocuSign Envelope ID: 3FD7AED5-47E6-493E-A9A6-B34B191DB411

PROJECT REFERENCE NO.	SHEET NO.
17BP.5.R.58	2C-2

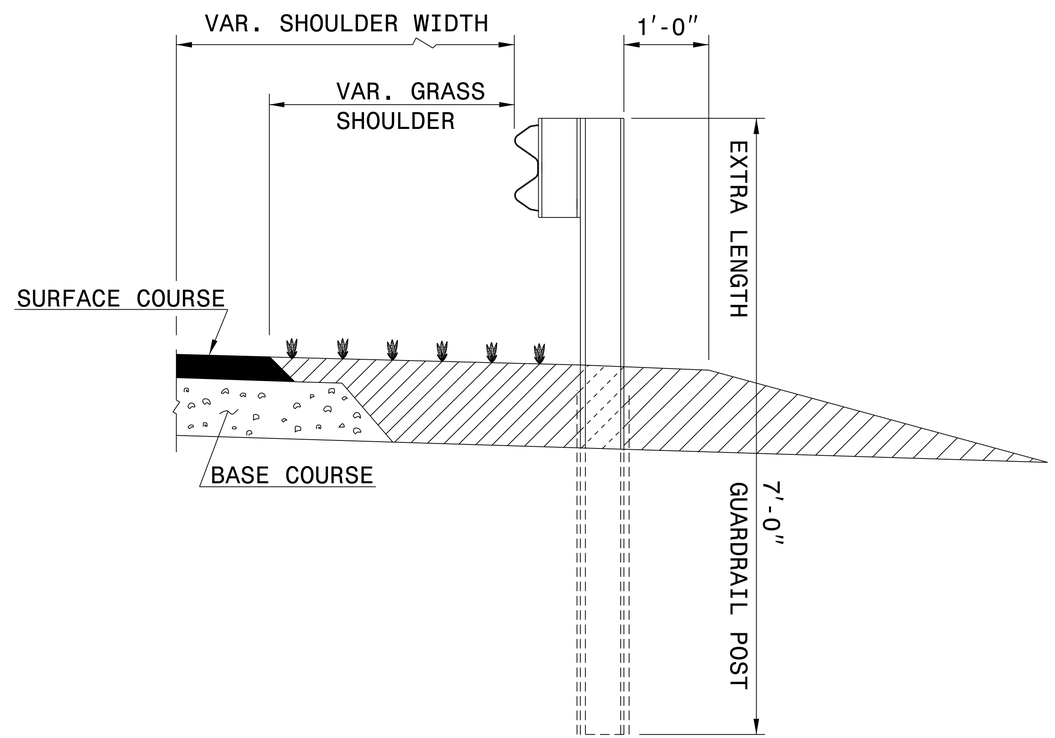

REFER TO NCDOT STANDARDS 862.01 AND 862.02 FOR PLACEMENT AND INSTALLATION.

NORTH CAROLINA PROFESSIONAL SEAL 022966 ENGINEER Joel S. Howerton

DocuSigned by: Joel Howerton 873F3D17DCDC45F...

1/11/2016

DOCUMENT NOT CONSIDERED FINAL UNLESS ALL SIGNATURES COMPLETED

CONTRACT STANDARDS AND DEVELOPMENT UNIT

Office 919-707-6950 FAX 919-250-4119

7' GUARDRAIL POST

ORIGINAL BY: L. Robinson DATE: 1995
MODIFIED BY: L. Robinson DATE: Feb. 1996
CHECKED BY: DATE:
FILE SPEC.: s:7'postguardrail.dgn

$$$$USERNAME$$$$
$$$$DGN$$$$
$$$$SCTNAME$$$$

PROJECT REFERENCE NO.	SHEET NO.
17BP.5.R.58	2G-1

GEOTECHNICAL ENGINEER

NORTH CAROLINA PROFESSIONAL SEAL 022246 ENGINEER SCOTT A. HIDDEN

DocuSigned by: Scott A. Hidden 1/8/2016
F760CAEB96FC4D3...
SIGNATURE DATE

ENGINEER

SIGNATURE DATE

DOCUMENT NOT CONSIDERED FINAL UNLESS ALL SIGNATURES COMPLETED

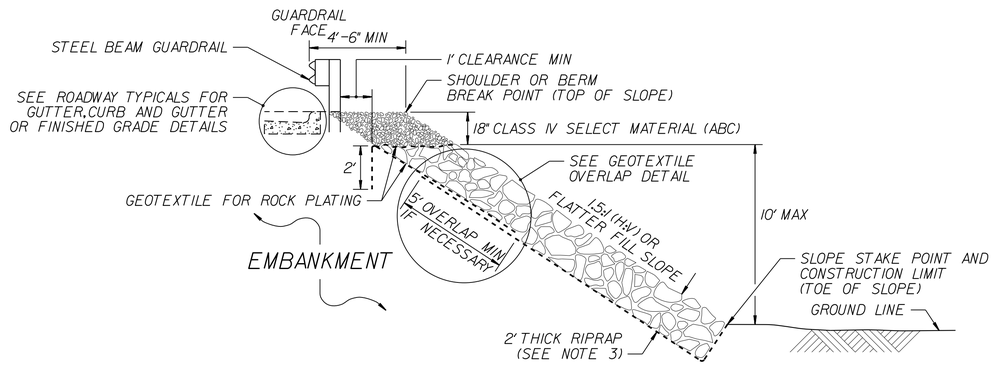

ROCK PLATING DETAIL NO. 1 – TYPICAL SECTION

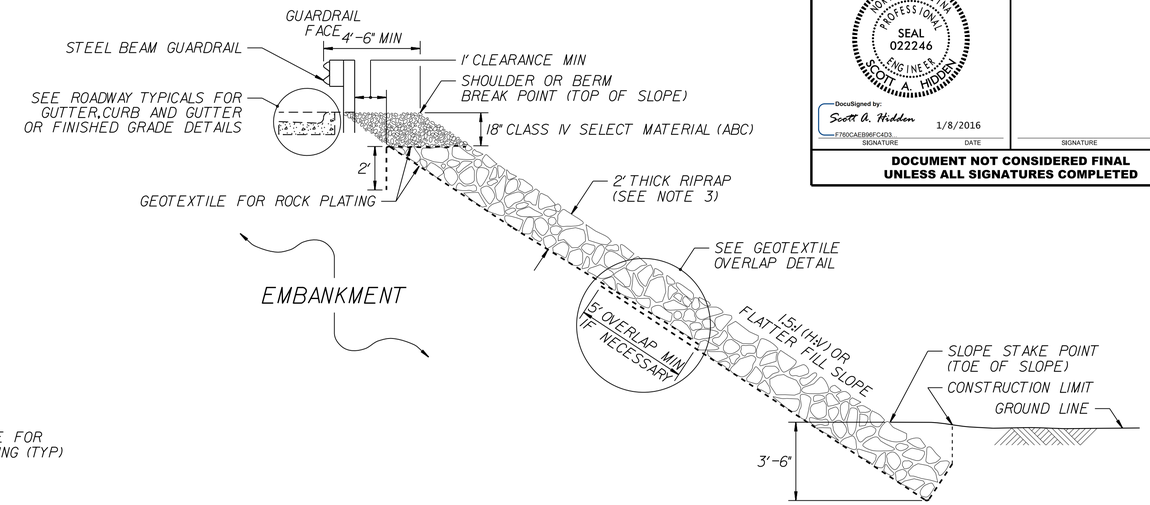

ROCK PLATING DETAIL NO. 2 – TYPICAL SECTION

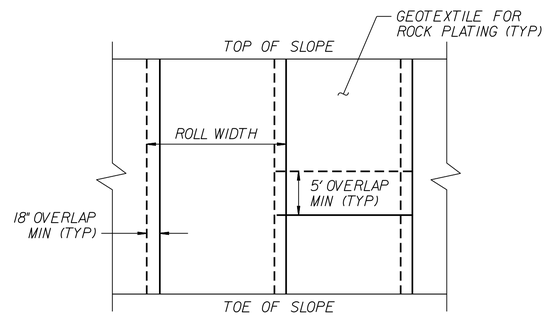

GEOTEXTILE OVERLAP DETAIL

(PLAN VIEW)

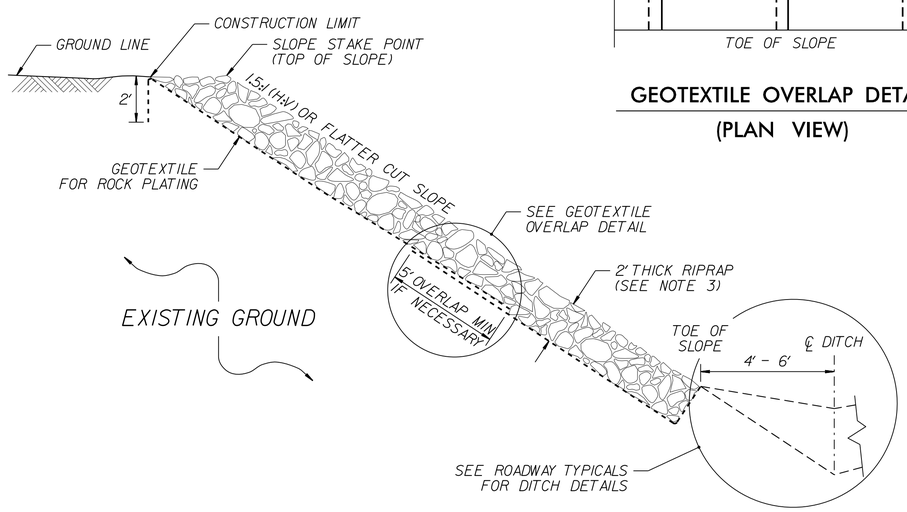

ROCK PLATING DETAIL NO. 3 – TYPICAL SECTION

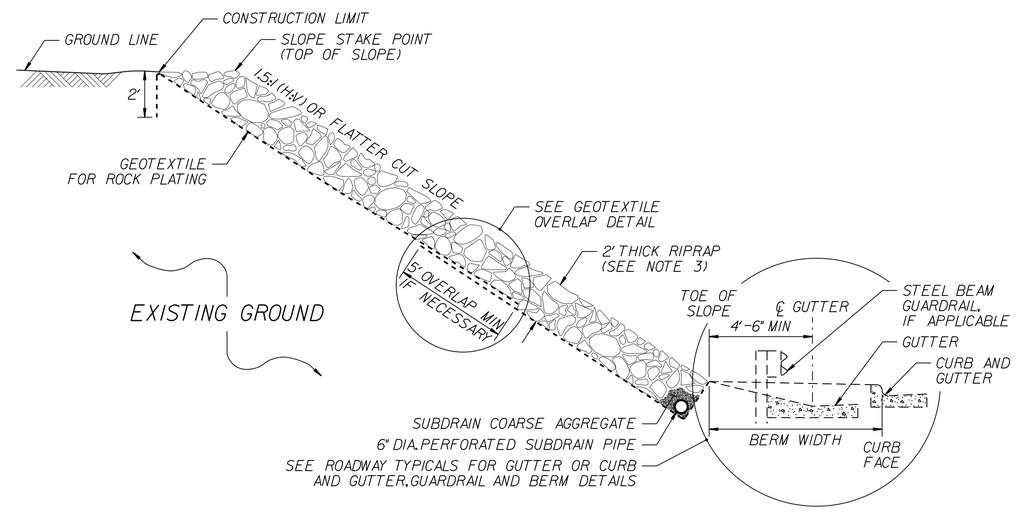

ROCK PLATING DETAIL NO. 4 – TYPICAL SECTION

NOTES:

1. SEE ROADWAY PLANS AND SUMMARY SHEETS FOR ROCK PLATING LOCATIONS.
2. FOR STANDARD ROCK PLATING, SEE SECTION 275 OF THE STANDARD SPECIFICATIONS.
3. USE CLASS I, 2 OR B RIPRAP UNLESS REQUIRED OTHERWISE IN THE ROADWAY SUMMARY SHEETS.

STATE OF NORTH CAROLINA DEPARTMENT OF TRANSPORTATION

NORTH CAROLINA DEPARTMENT OF TRANSPORTATION DIVISION OF HIGHWAYS

GEOTECHNICAL ENGINEERING UNIT

STANDARD DETAIL NO. 1802.01

STANDARD ROCK PLATING

DATE: 2-19-13

DocuSign Envelope ID: 3FD7AED5-47E6-493E-A9A6-B34B191DB411

SUMMARY OF EARTHWORK

Station	Station	Uncl. Excav.	Embank. +%	Borrow	Waste
12+00.00	14+03.81	96	176	80	
15+21.19	17+50.00	70	130	60	
SUBTOTALS:		166	306	140	
EST. 5% REPLACE TOPSOIL ON BORROW PIT				7	
GRAND TOTALS:		166		147	
SAY:		165		155	

Contingency Undercut 200 CY
Select Granular Material 200 CY
Geotextile for Soil Stabilization 200 SY

APPROXIMATE QUANTITIES ONLY. UNCLASSIFIED EXCAVATION, BORROW EXCAVATION, FINE GRADING, CLEARING AND GRUBBING, AND REMOVAL OF EXISTING PAVEMENT WILL BE PAID FOR AT THE CONTRACT LUMP SUM PRICE FOR "GRADING"

PAVEMENT REMOVAL SUMMARY

IN SQUARE YARDS

SURVEY LINE	Station	Station	LOCATION LT/RT/CL	ASPHALT REMOVAL
-L-	12+00.00	14+09.30	CL	460
-L-	14+99.03	17+50.00	CL	552
		TOTAL:		1012
		SAY:		1015

SHOULDER BERM GUTTER SUMMARY

LINE	Station	Station	LENGTH
-L-	15+32.19	16+14.00	81.81
		TOTAL:	81.81
		SAY:	85

"N" = DISTANCE FROM EDGE OF LANE TO FACE OF GUARDRAIL
TOTAL SHOULDER WIDTH = DISTANCE FROM EDGE OF TRAVEL LANE TO SHOULDER BREAK POINT.
FLARE LENGTH = DISTANCE FROM LAST SECTION OF PARALLEL GUARDRAIL TO END OF GUARDRAIL
W = TOTAL WIDTH OF FLARE FROM BEGINNING OF TAPER TO END OF GUARDRAIL

GUARDRAIL SUMMARY

G = GATING IMPACT ATTENUATOR TYPE 350
NG = NON-GATING IMPACT ATTENUATOR TYPE 350

SURVEY LINE	BEG. STA.	END STA.	LOCATION	LENGTH			WARRANT POINT		"N" DIST. FROM E.O.L.	TOTAL SHOUL WIDTH	FLARE LENGTH		W		ANCHORS									IMPACT ATTENUATOR TYPE 350		SINGLE FACED CONCRETE BARRIER	REMOVE EXISTING GUARDRAIL	REMOVE & STOCKPILE EXISTING GUARDRAIL	REMARKS
				STRAIGHT	SHOP CURVED	DOUBLE FACED	APPROACH END	TRAILING END			APPROACH END	TRAILING END	APPROACH END	TRAILING END	XI MOD	XI	GRAU 350	M-350	XIII	CAT-1	VI MOD	BIC	TYPE III	G	NG				
-L-	13+28.81	14+03.81	RT	75			14+05.00		5'-5"	8'-5"	50'		1'				1						1						GRAU-350 TL-3
-L-	13+28.81	14+03.81	LT	75				14+05.00	5'-5"	8'-5"		50'		1'			1						1						GRAU-350 TL-3
-L-	15+21.19	15+96.19	RT	75				15+20.00	5'-5"	7'-5"		50'		1'			1						1						EXTRA LONG GUARDRAIL POSTS; GRAU-350 TL-3
-L-	15+21.19	16+21.19	LT	100			15+20.00		5'-5"	8'-5"	81.25'		1'-7.5"				1						1						GRAU-350 TL-3
		SUBTOTALS		325													4						4						
		DEDUCITONS FOR ANCHOR UNITS																											
		GRAU-350 TL-3	4 @ 50'	-200																									
		TYPE III	4 @ 18.75'	-75																									
		PROJECT TOTALS		50																									
		SAY		50																									
	ADDITIONAL GUARDRAIL POSTS = 5 EA																												

REVISIONS

8/17/99

1/7/2016
12:00:00 AM
USER: Joyce
I:\Proj\340071_rdy_sum_03b-1.dgn

DocuSign Envelope ID: 3FD7AED5-47E6-493E-A9A6-B34B191DB411

COMPUTED BY: BTB DATE: 5/29/2015

CHECKED BY: ECOLOGICAL ENG., LLP DATE: 5/29/2015

NORTH CAROLINA DEPARTMENT OF TRANSPORTATION
DIVISION OF HIGHWAYS

PROJECT REFERENCE NO.	SHEET NO.
17BP.5.R.58	3D-1

DOCUMENT NOT CONSIDERED FINAL UNLESS ALL SIGNATURES COMPLETED

Note: Invert Elevations indicated are for Bid Purposes only and shall not be used for project construction stakeout. See "Standard Specifications For Roads and Structures, Section 300-5".

LIST OF PIPES, ENDWALLS, ETC. (FOR PIPES 48 INCHES & UNDER)

STATION	LOCATION (LT, RT, OR CL)*	STRUCTURE NO. FROM	STRUCTURE NO. TO	TOP ELEVATION	INVERT ELEVATION	INVERT ELEVATION	SLOPE CRITICAL	DRAINAGE PIPE (RCP, CSP, CAAP, HDPE, or PVC) SIZE 12"	15"	18"	24"	30"	36"	42"	48"	DO NOT USE RCP	DO NOT USE CSP	DO NOT USE CAAP	DO NOT USE HDPE
THICKNESS OR GAUGE																			
15+42 -L-	LT	0401		194.15	191.40														
		0401	0402		191.40	191.13			64										X
16+10 -L-	LT	0402		194.13	191.13														
		0402	0403		191.13	191.00			20										X
SHEET TOTALS									84										

STATION	C.S. PIPE SIZE 12"	15"	18"	24"	30"	36"	42"	48"	R.C. PIPE CLASS III SIZE 12"	15"	18"	24"	30"	36"	42"	48"	R.C. PIPE CLASS IV SIZE 12"	15"	18"	24"	30"	36"	42"	48"
THICKNESS OR GAUGE	.064	.064	.064	.064	.079	.079	.109	.109																
15+42 -L-																								
16+10 -L-																								
SHEET TOTALS																								

STATION	* " " R.C. PIPE (CLASS V)	**** RC PIPE CULVERTS, CONTRACTOR DESIGN	**** RC PIPE CULVERTS, CONTRACTOR DESIGN	15" SIDE DRAIN PIPE	18" SIDE DRAIN PIPE	ENDWALLS STD. 838.01 838.11 OR STD. 838.80 (UNLESS NOTED OTHERWISE) CU. YARDS R.C.P.	C.S.P.	QUANTITIES FOR DRAINAGE STRUCTURES PER EACH (0' THRU 5.0')	LIN. FT. A 5.0' THRU 10.0'	LIN. FT. B 10.0' AND ABOVE	"TOTAL L.F. FOR PAY QUANTITY SHALL BE COL. 'A' + (1.3 X COL. 'B')	C.B. STD. 840.01 OR STD. 840.02	FRAME, GRATES, AND HOOD STANDARD 840.03 TYPE OF GRATE E	F	G	CONCRETE TRANSITIONAL SECTION DROP INLET	CATCH BASIN	D.I. STD. 840.14 OR STD. 840.15	D.I. FRAME WITH TWO GRATES STD. 840.16	G.D.I. TYPE "A" STD. 840.17 OR 840.26	G.D.I. TYPE "B" STD. 840.18 OR 840.27	G.D.I. TYPE "D" STD. 840.19 OR 840.28	G.D.I. FRAME WITH GRATE STD. 840.20	G.D.I. FRAME WITH TWO GRATES STD. 840.22	G.D.I. (N.S.) FRAME WITH GRATE STD. 840.24	G.D.I. (N.S.) FRAME WITH TWO GRATES STD. 840.24	J.B. STD. 840.31 OR 840.32	G.D.I. FRAME (N.S. FLAT) W/2 GRATES STD. 840.29	T.B.D.I. STD. 840.35	15" DRAINAGE PIPE ELBOW	SIDE DRAIN PIPE ELBOWS NO. & SIZE	CONC. & BRICK PIPE PLUG, C.Y. STD. 840.71	CONC. COLLARS CL. "B" C.Y. STD. 840.72	PIPE REMOVAL LIN. FT.	REMARKS
15+42 -L-								1																			1	1								
16+10 -L-								1																			1	1								
SHEET TOTALS								2																			2	2								

ABBREVIATIONS

C.B.	CATCH BASIN
N.D.I.	NARROW DROP INLET
D.I.	DROP INLET
G.D.I.	GRATED DROP INLET
G.D.I.(N.S.)	(NARROW SLOT)
J.B.	JUNCTION BOX
M.H.	MANHOLE
T.B.D.I.	TRAFFIC BEARING DROP INLET
T.B.J.B.	TRAFFIC BEARING JUNCTION BOX

REVISIONS

8/17/99

1/7/2016
pop\340071_rdy_sum_03d-1.dgn
USER:bbowing

DocuSign Envelope ID: 3FD7AED5-47E6-493E-A9A6-B34B191DB411

8/17/99

COMPUTED BY: MSB DATE: 8-21-2015
CHECKED BY: APY DATE: 11-30-2015

(4-21-15)

PROJECT REFERENCE NO.	SHEET NO.
17BP.5.R.58	3G-1

DOCUMENT NOT CONSIDERED FINAL UNLESS ALL SIGNATURES COMPLETED

REVISIONS

STATE OF NORTH CAROLINA
DIVISION OF HIGHWAYS

SUMMARY OF ROCK PLATING

LINE	Beginning Slope	Approx. Station	Ending Slope	Approx. Station	Location LT/RT	Rock Plating Detail No.	Riprap Class	SY
-L-	1.5:1 (H:V)	15+20	2:1 (H:V)	15+70	RT	2	II	190
							TOTAL SY:	190

*Use Class I, II or B riprap if riprap class is not shown for rock plating location.

1/7/2016
...\Proj\340071_RDY_SUM_03G-1.dgn
USER:ayoung

DocuSign Envelope ID: 90DEFE48-BC1E-4C3C-AB8E-B1F1ABA82B18

PROJECT REFERENCE NO.	SHEET NO.
17BP.5.R.58	4
R/W SHEET NO.	

ROADWAY DESIGN ENGINEER
NORTH CAROLINA PROFESSIONAL SEAL 34407 ENGINEER ANDREW P. YOUNG
DocuSign Envelope ID: 5/17/2016
Andrew P. Young

HYDRAULICS ENGINEER
NORTH CAROLINA PROFESSIONAL SEAL 039102 ENGINEER BRANDON T. BARHAM
DocuSign Envelope ID: 5/17/2016
Brandon Barham

STEWART
Firm License No. C-1051
421 Fayetteville St.
Suite 400
Raleigh, NC 27601
T 919.380.8750
www.stewartinc.com

ECOLOGICAL ENGINEERING
NC FIRM LICENSE No. F-1148
1151 SE Cary Parkway, Suite 101
Cary, NC 27518
(919) 557-0929

DOCUMENT NOT CONSIDERED FINAL UNLESS ALL SIGNATURES COMPLETED

REVISIONS

8/17/99

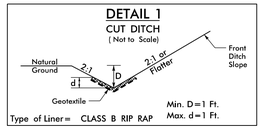

FROM STA. 13+00 TO STA. 13+65 -L- LT

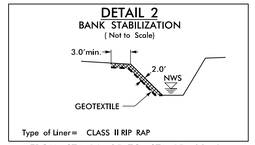

FROM STA 14+85 TO STA 15+00 -L-

-L-

PI Sta 11+94.92	PI Sta 17+98.50
△ = 10° 45' 29.1" (LT)	△ = 12° 41' 06.1" (LT)
D = 3° 35' 35.0"	D = 4° 19' 27.2"
L = 299.41'	L = 293.35'
T = 150.15'	T = 147.28'
R = 1,594.62'	R = 1,325.00'
e = 0.04 Ft/Ft	e = See Plans
Runout = See Plans	Runout = See Plans

NAD 83 NA 2011

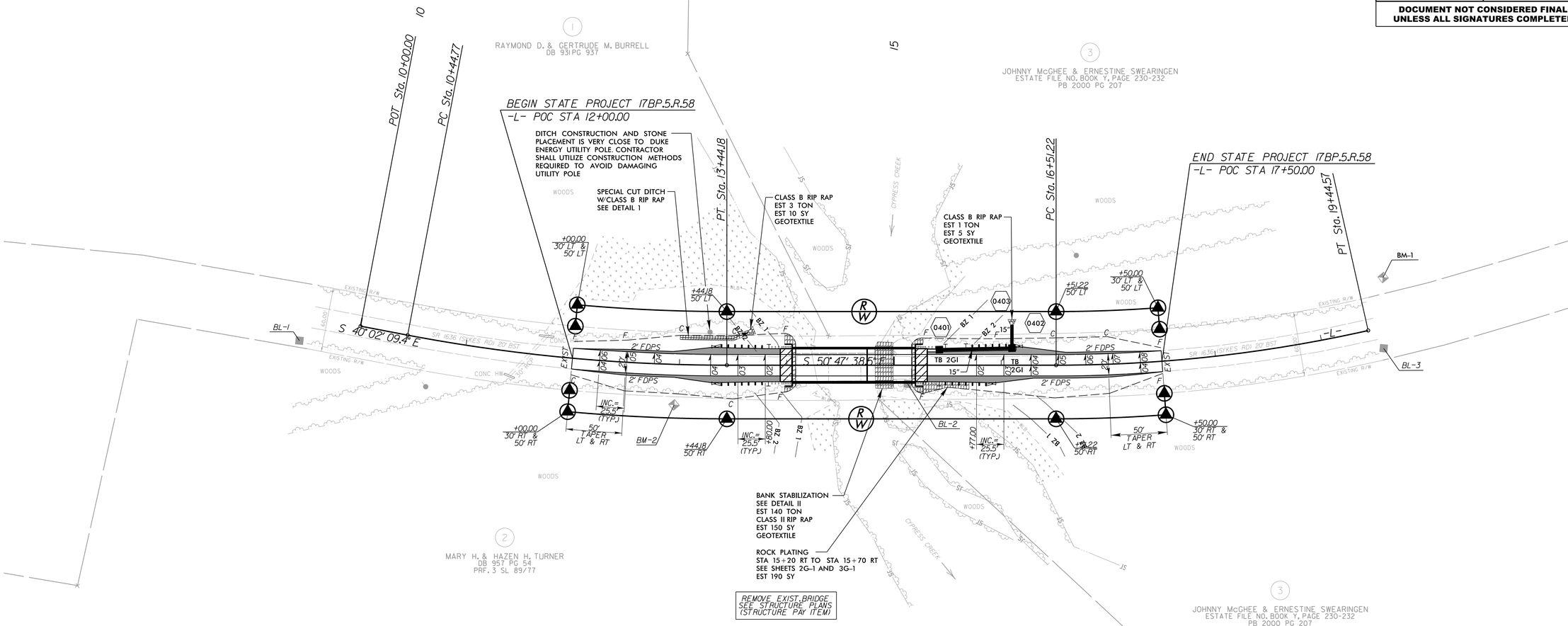

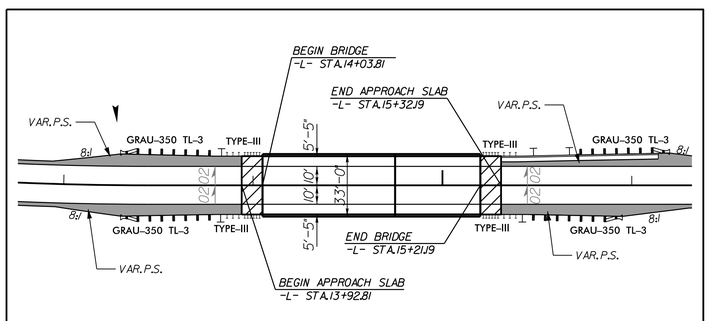

DETAIL SHOWING PAVEMENT-BRIDGE RELATIONSHIP (N.T.S.)

FOR PROFILE, SEE SHEET 5.

SEE SHEETS S-1 THRU S-19 FOR STRUCTURE PLANS.

5/17/2016
...\Proj\340071_RDY_PSH04.dgn
USER:ayoung

DocuSign Envelope ID: 3FD7AED5-47E6-493E-A9A6-B34B191DB411

PROJECT REFERENCE NO.	SHEET NO.
17BP.5.R.58	5
R/W SHEET NO.	

ROADWAY DESIGN ENGINEER
NORTH CAROLINA PROFESSIONAL SEAL 34407 ENGINEER ANDREW P. YOUNG
DocuSigned by: Andrew P. Young 1/11/2016

HYDRAULICS ENGINEER
NORTH CAROLINA PROFESSIONAL SEAL 039102 ENGINEER BRANDON T. BARHAM
DocuSigned by: Brandon T. Barham 1/11/2016

STEWART
Firm License No. C-1051
421 Fayetteville St.
Suite 400
Raleigh, NC 27601
T 919.380.8750
www.stewartinc.com

ECOLOGICAL ENGINEERING
NC FIRM LICENSE No: F-1148
1151 SE Cary Parkway, Suite 101
Cary, NC 27518
(919) 557-0929

DOCUMENT NOT CONSIDERED FINAL UNLESS ALL SIGNATURES COMPLETED

REVISIONS

8/17/99

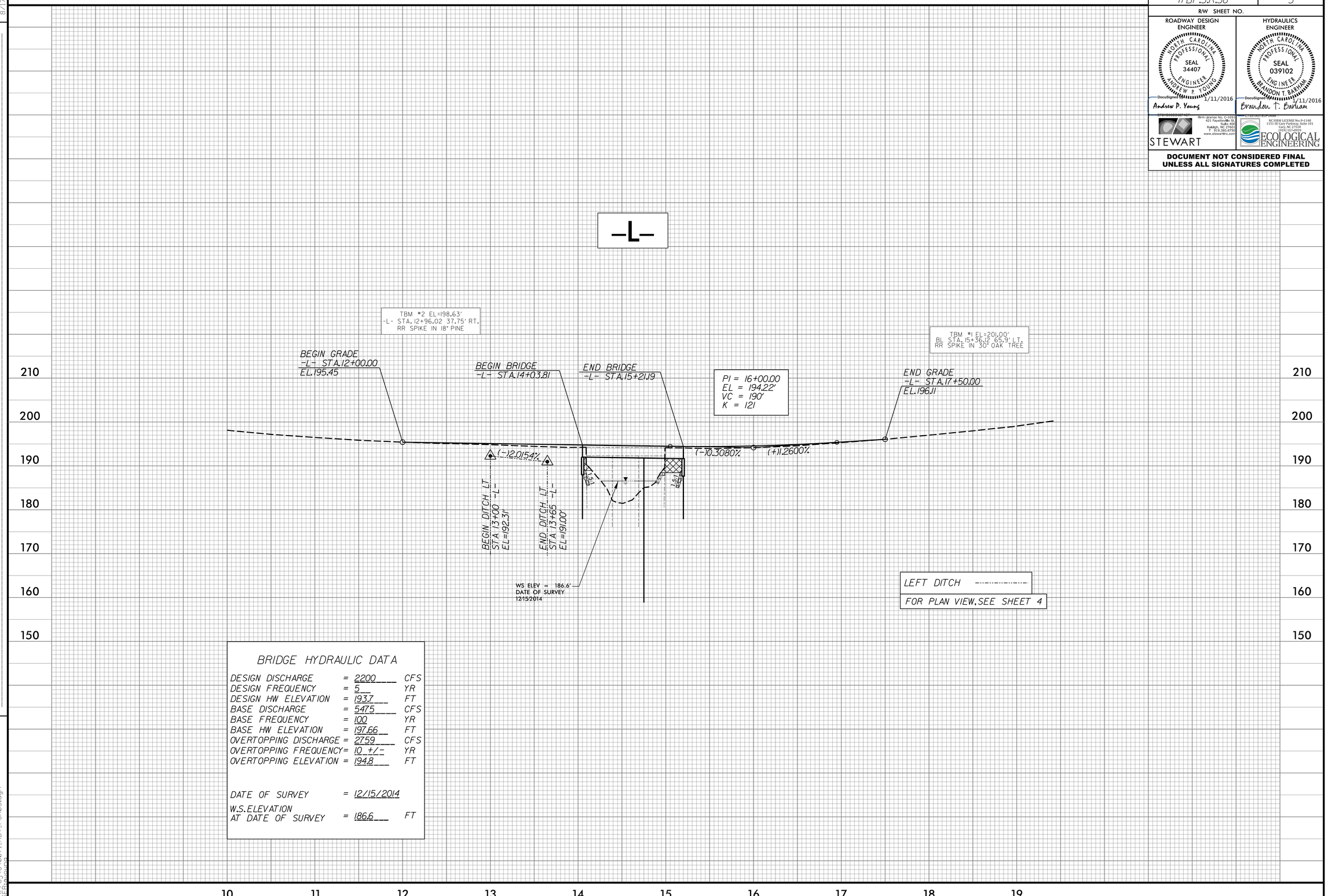

BRIDGE HYDRAULIC DATA

DESIGN DISCHARGE	=	2200	CFS
DESIGN FREQUENCY	=	5	YR
DESIGN HW ELEVATION	=	193.7	FT
BASE DISCHARGE	=	5475	CFS
BASE FREQUENCY	=	100	YR
BASE HW ELEVATION	=	197.66	FT
OVERTOPPING DISCHARGE	=	2759	CFS
OVERTOPPING FREQUENCY	=	10 +/-	YR
OVERTOPPING ELEVATION	=	194.8	FT
DATE OF SURVEY	=	12/15/2014	
W.S. ELEVATION AT DATE OF SURVEY	=	186.6	FT

1/7/2016
...\Proj\340071_RDY_PSH05.dgn
USER:ayoung

DocuSign Envelope ID: 7BFE5B8D-19EA-4CD9-89A6-A6E5CB9DE080

STATE OF NORTH CAROLINA
DIVISION OF HIGHWAYS

TRANSPORTATION MANAGEMENT PLAN

FRANKLIN COUNTY

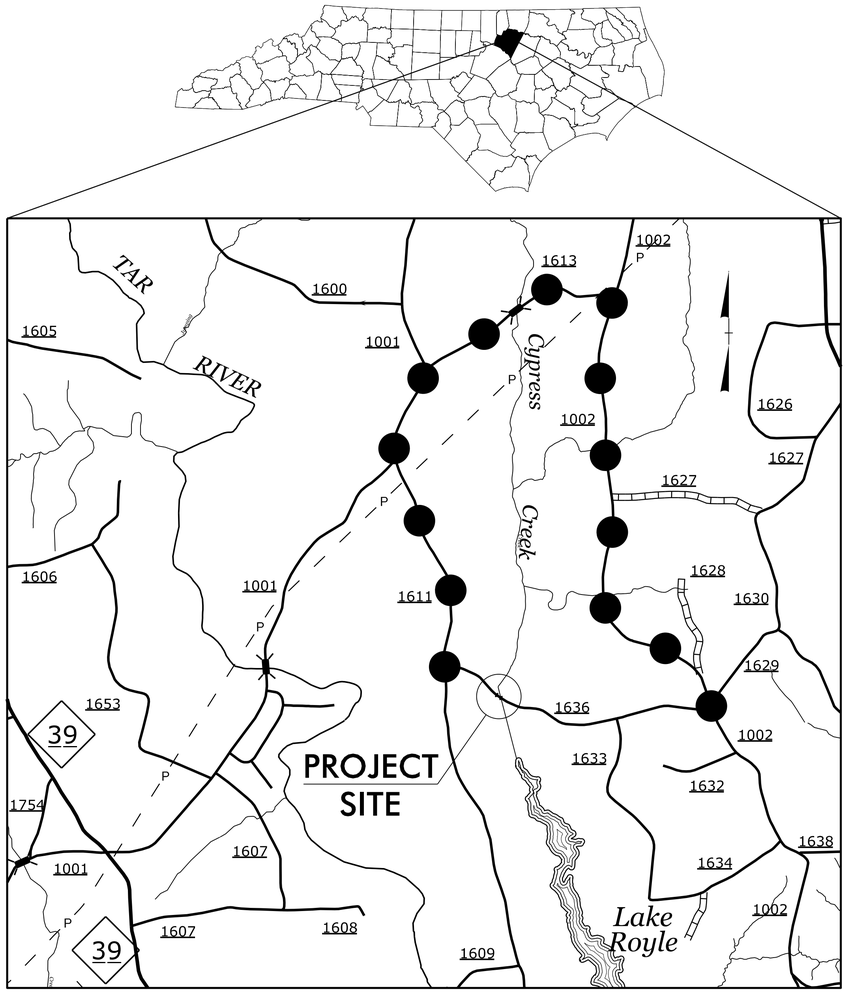

OFFSITE DETOUR ROUTE

INDEX OF SHEETS

SHEET NO.	TITLE
TMP-1	TITLE SHEET, VICINITY MAP, AND INDEX OF SHEETS
TMP-1A	LIST OF APPLICABLE ROADWAY STANDARD DRAWINGS AND LEGEND
TMP-1B	TRANSPORTATION OPERATIONS PLAN: (GENERAL NOTES, MANAGEMENT STRATEGIES, AND PHASING)
TMP-2	SPECIAL SIGN DESIGN
TMP-3	OFF-SITE DETOUR

SHEET NO.
TMP-1

TIP PROJECT: 17BP.5.R.58

DOCUMENT NOT CONSIDERED FINAL UNLESS ALL SIGNATURES COMPLETED

WORK ZONE SAFETY & MOBILITY
"from the MOUNTAINS to the COAST"

N.C.D.O.T. WORK ZONE TRAFFIC CONTROL
1561 MAIL SERVICE CENTER (MSC) RALEIGH, NC 27699-1561
750 N. GREENFIELD PARKWAY, GARNER, NC 27529 (DELIVERY)
PHONE: (919) 773-2800 FAX: (919) 771-2745

ANDY YOUNG, PE — TRAFFIC CONTROL PROJECT ENGINEER

MICHAEL BURNS, EI — TRAFFIC CONTROL DESIGN ENGINEER

DIVISION OF HIGHWAYS · STATE OF NORTH CAROLINA · DEPARTMENT OF TRANSPORTATION · WORK ZONE TRAFFIC CONTROL

PLANS PREPARED BY:

STEWART
421 FAYETTEVILLE ST, STE 400
RALEIGH, NC 27601
T 919.380.8750
Firm License # : C-1051
www.stewartinc.com
PROJECT # :811001

APPROVED: Andrew P. Young
DocuSigned by: EF21D93DD62F4EF...
DATE: 1/11/2016

SEAL
NORTH CAROLINA PROFESSIONAL SEAL 34407 ENGINEER ANDREW P. YOUNG

12/2/2015
...\TCP\34007L_TC_TCP-01.dgn
USER:ayoung

DocuSign Envelope ID: 7BFE5B8D-19EA-4CD9-89A6-A6E5CB9DE080

PROJ. REFERENCE NO.	SHEET NO.
17BP.5.R.58	TMP-1A

ROADWAY STANDARD DRAWINGS

THE FOLLOWING ROADWAY STANDARDS AS SHOWN IN "ROADWAY STANDARD DRAWINGS" - PROJECT SERVICES UNIT - N.C. DEPARTMENT OF TRANSPORTATION - RALEIGH, N.C., DATED JANUARY 2012 ARE APPLICABLE TO THIS PROJECT AND BY REFERENCE HEREBY ARE CONSIDERED A PART OF THESE PLANS:

STD. NO.	TITLE
1101.03	TEMPORARY ROAD CLOSURES
1101.11	TRAFFIC CONTROL DESIGN TABLES
1110.01	STATIONARY WORK ZONE SIGNS
1145.01	BARRICADES

LEGEND

GENERAL

- DIRECTION OF TRAFFIC FLOW
- DIRECTION OF PEDESTRIAN TRAFFIC FLOW
- EXIST. PVMT.
- NORTH ARROW
- PROPOSED PVMT.
- TEMP. SHORING (LOCATION PURPOSES ONLY)
- WORK AREA
- REMOVAL

SIGNALS

- EXISTING
- PROPOSED
- TEMPORARY

PAVEMENT MARKINGS

- EXISTING LINES
- TEMPORARY LINES

TRAFFIC CONTROL DEVICES

- BARRICADE (TYPE III)
- CONE
- DRUM
- SKINNY DRUM
- TUBULAR MARKER
- TEMPORARY CRASH CUSHION
- FLASHING ARROW BOARD
- FLAGGER
- LAW ENFORCEMENT
- TRUCK MOUNTED ATTENUATOR (TMA)
- CHANGEABLE MESSAGE SIGN

TEMPORARY SIGNING

- PORTABLE SIGN
- STATIONARY SIGN
- STATIONARY OR PORTABLE SIGN

PAVEMENT MARKERS

- CRYSTAL/CRYSTAL
- CRYSTAL/RED
- YELLOW/YELLOW

PAVEMENT MARKING SYMBOLS

- PAVEMENT MARKING SYMBOLS

STEWART
Firm License No. C-1051
421 Fayetteville St,
Suite 400
Raleigh, NC 27601
T 919.380.8750
www.stewartinc.com

DOCUMENT NOT CONSIDERED FINAL UNLESS ALL SIGNATURES COMPLETED

APPROVED: DocuSigned by: Andrew P. Young DATE: 1/11/2016

SEAL

NORTH CAROLINA PROFESSIONAL SEAL 34407 ENGINEER ANDREW P. YOUNG

DIVISION OF HIGHWAYS · STATE OF NORTH CAROLINA · DEPARTMENT OF TRANSPORTATION · WORK ZONE TRAFFIC CONTROL

ROADWAY STANDARD DRAWINGS & LEGEND

12/2/2015
...\TCP\34007L_TC_TCP-01A.dgn
USER:ayoung

DocuSign Envelope ID: 7BFE5B8D-19EA-4CD9-89A6-A6E5CB9DE080

PROJ. REFERENCE NO.	SHEET NO.
17BP.5.R.58	TMP-1B

GENERAL NOTES

CHANGES MAY BE REQUIRED WHEN PHYSICAL DIMENSIONS IN THE DETAIL DRAWINGS, STANDARD DETAILS, AND ROADWAY DETAILS ARE NOT ATTAINABLE TO MEET FIELD CONDITIONS OR RESULT IN DUPLICATE OR UNDESIRED OVERLAPPING OF DEVICES. MODIFICATION MAY INCLUDE: MOVING, SUPPLEMENTING, COVERING, OR REMOVAL OF DEVICES AS DIRECTED BY THE ENGINEER.

THE FOLLOWING GENERAL NOTES APPLY AT ALL TIMES FOR THE DURATION OF THE CONSTRUCTION PROJECT EXCEPT WHEN OTHERWISE NOTED IN THE PLAN OR DIRECTED BY THE ENGINEER.

TRAFFIC PATTERN ALTERATIONS

A) NOTIFY THE ENGINEER THIRTY (30) CALENDAR DAYS PRIOR TO ANY TRAFFIC PATTERN ALTERATION.

SIGNING

B) INSTALL ADVANCE WORK ZONE WARNING SIGNS WHEN WORK IS WITHIN 40 FT FROM THE EDGE OF TRAVEL LANE AND NO MORE THAN THREE (3) DAYS PRIOR TO THE BEGINNING OF CONSTRUCTION.

C) PROVIDE SIGNING AND DEVICES REQUIRED TO CLOSE THE ROAD ACCORDING TO THE ROADWAY STANDARD DRAWINGS AND TRANSPORTATION MANAGEMENT PLANS.

PROVIDE SIGNING REQUIRED FOR THE OFF-SITE DETOUR ROUTE AS SHOWN IN THE TRANSPORTATION MANAGEMENT PLANS.

D) COVER OR REMOVE ALL SIGNS AND DEVICES REQUIRED TO CLOSE THE ROAD WHEN ROAD CLOSURE IS NOT IN OPERATION.

COVER OR REMOVE ALL SIGNS REQUIRED FOR THE OFF-SITE DETOUR WHEN THE DETOUR IS NOT IN OPERATION.

E) ENSURE ALL NECESSARY SIGNING IS IN PLACE PRIOR TO ALTERING ANY TRAFFIC PATTERN.

TRAFFIC CONTROL DEVICES

F) PLACE TYPE III BARRICADES, WITH "ROAD CLOSED" SIGN R11-2 ATTACHED, OF SUFFICIENT LENGTH TO CLOSE ENTIRE ROADWAY.

PAVEMENT MARKINGS AND MARKERS

G) TIE PROPOSED PAVEMENT MARKING LINES TO EXISTING PAVEMENT MARKING LINES.

MANAGEMENT STRATEGIES

DURING CONSTRUCTION OF PROPOSED STRUCTURE BRIDGE No. 71 OVER CYPRESS CREEK, SR 1636 (SYKES RD.) WILL BE CLOSED TO THROUGH TRAFFIC. LOCAL TRAFFIC ON SR 1636 (SYKES RD.) WILL BE MAINTAINED USING AN OFFSITE DETOUR.

ACCESS TO ALL RESIDENCES AND BUSINESSES WITHIN THE PROJECT LIMITS MUST BE MAINTAINED AT ALL TIMES.

NOTIFY THE ENGINEER, FRANKLIN COUNTY EMERGENCY SERVICES, AND FRANKLIN COUNTY SCHOOLS OF BRIDGE REMOVAL THIRTY (30) CALENDAR DAYS PRIOR TO ROAD CLOSURE.

PHASING

STEP 1:

USING RSD 1101.03, SHEET 1 OF 9, SHEETS TMP-2 AND TMP-3, INSTALL DETOUR SIGNS, PLACE TYPE III BARRICADES TO CLOSE SR 1636 (SYKES RD.) TO THROUGH TRAFFIC, AND DETOUR TRAFFIC OFFSITE.

STEP 2:

AWAY FROM TRAFFIC, COMPLETE THE FOLLOWING:
(SEE ROADWAY AND STRUCTURE PLANS).

1) REMOVE EXISTING STRUCTURE No. 71 AND CONSTRUCT THE PROPOSED STRUCTURE FROM -L- STA. 14+03.81 TO -L- STA 15+21.19.

2) CONSTRUCT THE PROPOSED ROADWAY UP TO AND INCLUDING THE FINAL LAYER OF SURFACE COURSE FROM -L- STA. 12+00.00 TO -L- STA. 14+03.81 AND -L- STA 15+21.19 TO -L- STA 17+50.00.

3) USING THE FINAL PAVEMENT MARKING PLAN, PLACE FINAL PAVEMENT MARKINGS AND MARKERS, FROM -L- STA. 12+00.00 TO -L- STA. 17+50.00 AND TIE TO EXISTING PAVEMENT MARKINGS.

STEP 3:
OPEN ROADWAY TO TRAFFIC AND REMOVE ALL WORK ZONE SIGNAGE.

STEWART
Firm License No. C-1051
421 Fayetteville St,
Suite 400
Raleigh, NC 27601
T 919.380.8750
www.stewartinc.com

DOCUMENT NOT CONSIDERED FINAL UNLESS ALL SIGNATURES COMPLETED

APPROVED: Andrew P. Young DATE: 1/11/2016
Docusigned by:
DF2165DD62F4EF...

SEAL

NORTH CAROLINA PROFESSIONAL SEAL 34407 ENGINEER ANDREW P. YOUNG

DIVISION OF HIGHWAYS
STATE OF NORTH CAROLINA
DEPARTMENT OF TRANSPORTATION
WORK ZONE TRAFFIC CONTROL

TRANSPORTATION OPERATIONS PLAN

12/2/2015
...\TCP\34007I_TC_TCP-01B.dgn
USER:ayoung

DocuSign Envelope ID: 7BFE5B8D-19EA-4CD9-89A6-A6E5CB9DE080

PROJ. REFERENCE NO.	SHEET NO.
17BP.5.R.58	TMP-2

SIGN NUMBER: SYKES RD
TYPE: STATIONARY
QUANTITY: SEE PLANS

BACKG COLOR: Fluorescent Orange
COPY COLOR: Black

SYMBOL	X	Y	WID	HT

SIGN WIDTH: 3′-0″
HEIGHT: 1′-6″
TOTAL AREA: 4.5 Sq.Ft.

BORDER TYPE: INSET
RECESS: 0.38″
WIDTH: 0.63″
RADII: 1.5″

NO. Z BARS:
LENGTH:

MAT′L: 0.080″ (2.0 mm) ALUMINUM

DESIGN BY: MSB
CHECKED BY: DRR
DATE: Feb 17, 2015
PROJECT ID: 17BP.5.R.58
DIV: 5

USE NOTES: 1,2

1. Legend and border shall be direct applied black non-reflective sheeting.
2. Background shall be NC GRADE B fluoresent orange retroreflective sheeting.

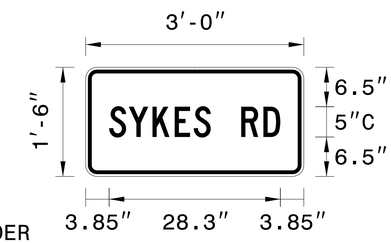

BORDER
R=1.5″
TH=0.63″
IN=0.38″

Panel Style: Traffic Control.ssi
M.U.T.C.D.: 2009 Edition

Spacing Factor is 1 unless specified otherwise

LETTER POSITIONS

Letter locations are panel edge to lower left corner

	S	Y	K	E	S		R	D	Series/Size Text Length
	3.9	7.1	11	14.7	17.8	20.6	25.7	29.3	C 2000 / 28.3

FILENAME: 340071_TC_TCP-02

NORTH CAROLINA D.O.T. SIGN DETAIL

STEWART
Firm License No. C-1051
421 Fayetteville St,
Suite 400
Raleigh, NC 27601
T 919.380.8750
www.stewartinc.com

DOCUMENT NOT CONSIDERED FINAL UNLESS ALL SIGNATURES COMPLETED

APPROVED Andrew P. Young DATE: 1/11/2016

SEAL

NORTH CAROLINA PROFESSIONAL SEAL 34407 ENGINEER ANDREW P. YOUNG

DIVISION OF HIGHWAYS STATE OF NORTH CAROLINA DEPARTMENT OF TRANSPORTATION WORK ZONE TRAFFIC CONTROL

SPECIAL SIGN DESIGN

12/2/2015
...\TCP\340071_TC_TCP-02.dgn
USER:ayoung

DocuSign Envelope ID: 7BFE5B8D-19EA-4CD9-89A6-A6E5CB9DE080

PROJ. REFERENCE NO.	SHEET NO.
17BP.5.R.58	TMP-3

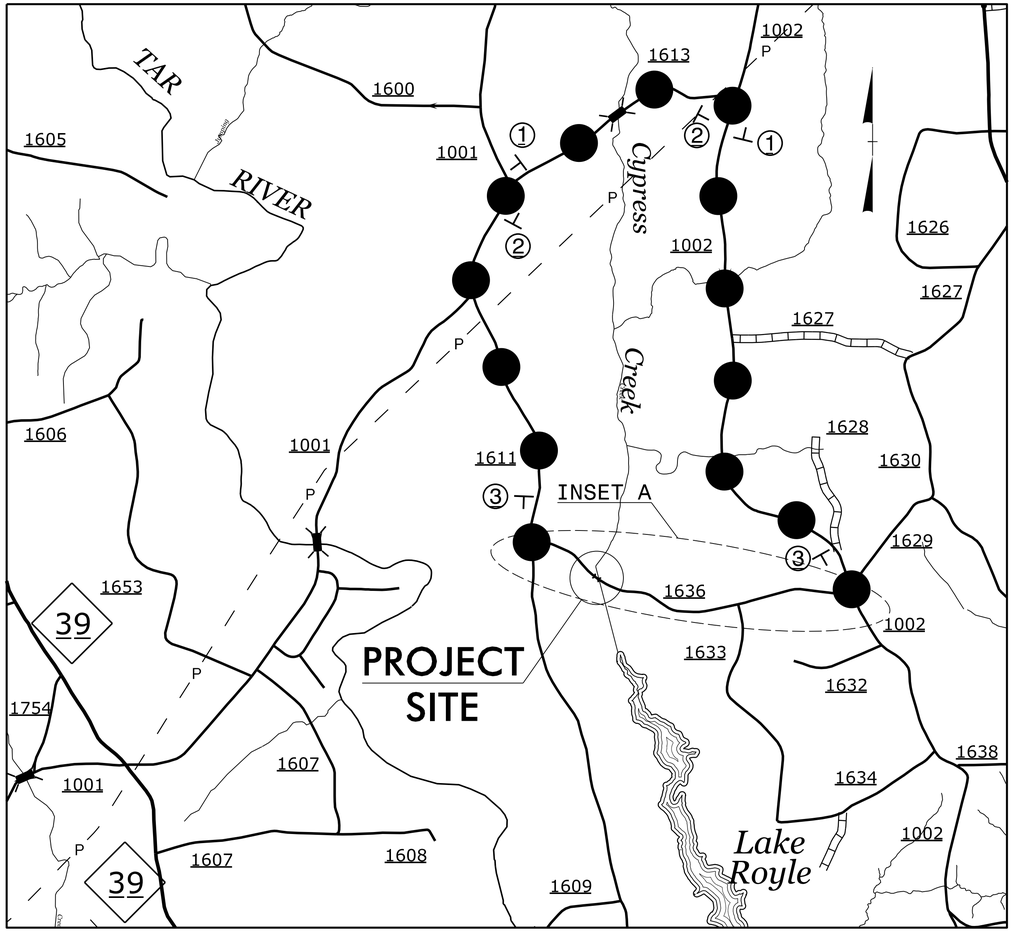

INSET A

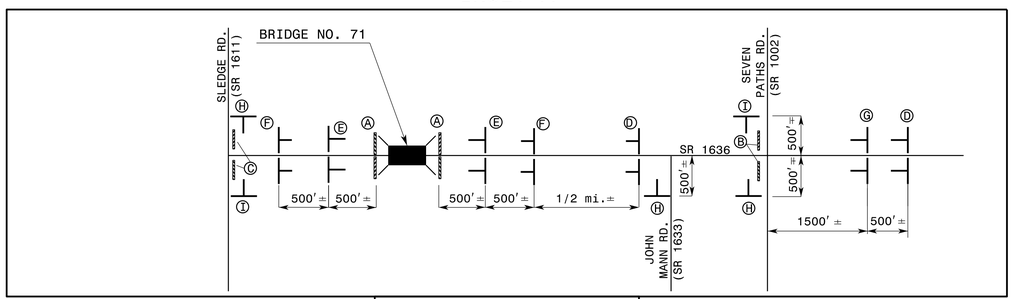

REFER TO ROADWAY STANDARD DRAWING 1101.03, SHEET 1 OF 9 FOR APPLICABLE NOTES.

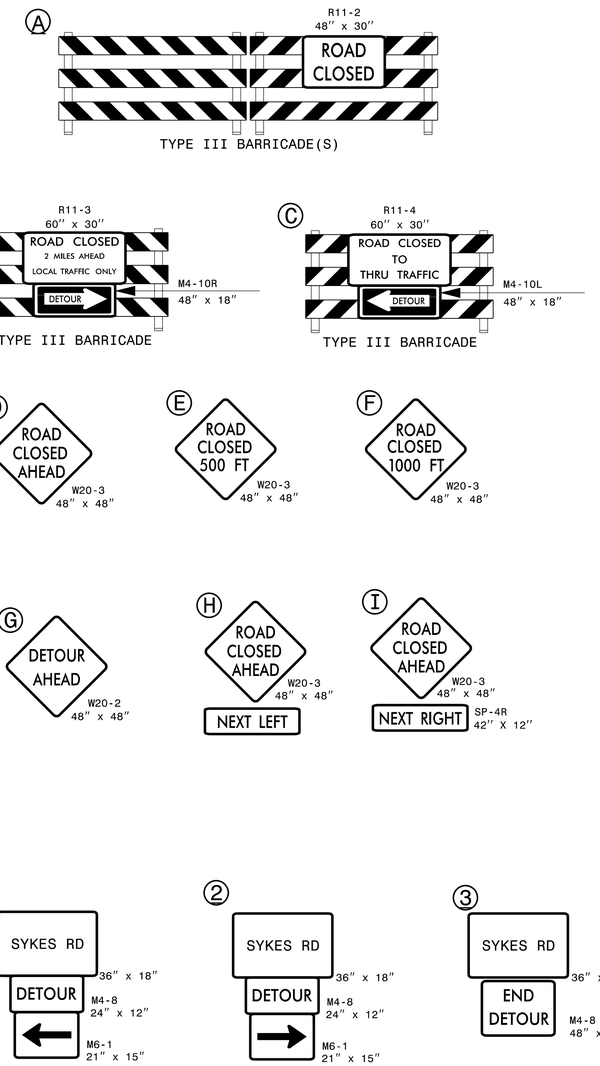

STEWART
Firm License No. C-1051
421 Fayetteville St,
Suite 400
Raleigh, NC 27601
T 919.380.8750
www.stewartinc.com

DOCUMENT NOT CONSIDERED FINAL UNLESS ALL SIGNATURES COMPLETED

APPROVED: Andrew P. Young DATE: 1/11/2016

SEAL

NORTH CAROLINA PROFESSIONAL ENGINEER SEAL 34407 ANDREW P. YOUNG

DIVISION OF HIGHWAYS STATE OF NORTH CAROLINA DEPARTMENT OF TRANSPORTATION WORK ZONE TRAFFIC CONTROL

OFF-SITE DETOUR

12/2/2015
...\TCP\34007I_TC_TCP-03.dgn
USER:ayoung

DocuSign Envelope ID: 6103E06A-484D-46A8-9B1A-995D43668127

T.I.P.: 17BP.5.R.58

CONTRACT:

TIP NO.	SHEET NO.
17BP.5.R.58	PMP-1

APPROVED: DocuSigned by: Andrew P. Young EF21D93D062F4EF...

DATE: 1/11/2016

SEAL: NORTH CAROLINA PROFESSIONAL SEAL 34407 ENGINEER ANDREW P. YOUNG

DOCUMENT NOT CONSIDERED FINAL UNLESS ALL SIGNATURES COMPLETED

STATE OF NORTH CAROLINA
DEPARTMENT OF TRANSPORTATION

PAVEMENT MARKING PLAN

FRANKLIN COUNTY

LOCATION: BRIDGE NO. 71 OVER CYPRESS CREEK ON SR 1636 (SYKES ROAD)

ROADWAY STANDARD DRAWING

THE FOLLOWING ROADWAY STANDARDS AS APPEAR IN "ROADWAY STANDARD DRAWINGS" - PROJECT SERVICES UNIT - N.C. DEPARTMENT OF TRANSPORTATION - RALEIGH, N.C., DATED JANUARY 2012 ARE APPLICABLE TO THIS PROJECT AND BY REFERENCE HEREBY ARE CONSIDERED A PART OF THESE PLANS:

STD. NO.	TITLE
1205.01	PAVEMENT MARKINGS - LINE TYPES AND OFFSETS
1205.02	PAVEMENT MARKINGS - TWO-LANE AND MULTILANE ROADWAYS
1205.12	PAVEMENT MARKINGS - BRIDGES
1250.01	RAISED PAVEMENT MARKERS - INSTALLATION SPACING
1251.01	RAISED PAVEMENT MARKERS - PERMANENT AND TEMPORARY
1261.01	GUARDRAIL AND BARRIER DELINEATORS - INSTALLATION SPACING
1261.02	GUARDRAIL AND BARRIER DELINEATORS - TYPES AND MOUNTING
1262.01	GUARDRAIL END DELINEATION

PAVEMENT MARKING SCHEDULE

SYMBOL	DESCRIPTION
PA	PAINT WHITE EDGELINE (4") (2X)
PI	PAINT YELLOW DOUBLE CENTER (4") (2X)
MA	PERMANENT RAISED PAVEMENT MARKERS YELLOW AND YELLOW

GENERAL NOTES

THE FOLLOWING GENERAL NOTES APPLY AT ALL TIMES FOR THE DURATION OF THE CONSTRUCTION PROJECT, EXCEPT WHEN OTHERWISE NOTED IN THE PLAN, OR DIRECTED BY THE ENGINEER.

A) INSTALL PAVEMENT MARKINGS AND PAVEMENT MARKERS ON THE FINAL SURFACE AS FOLLOWS:

ROAD NAME	MARKING	MARKER
SYKES ROAD	PAINT	RAISED
BRIDGE	PAINT	RAISED

B) TIE PROPOSED PAVEMENT MARKING LINES TO EXISTING PAVEMENT MARKING LINES.

C) REMOVE/REPLACE ANY CONFLICTING/DAMAGED PAVEMENT MARKINGS.

D) PASSING ZONES WILL BE DETERMINED IN THE FIELD AND MUST BE APPROVED BY THE ENGINEER.

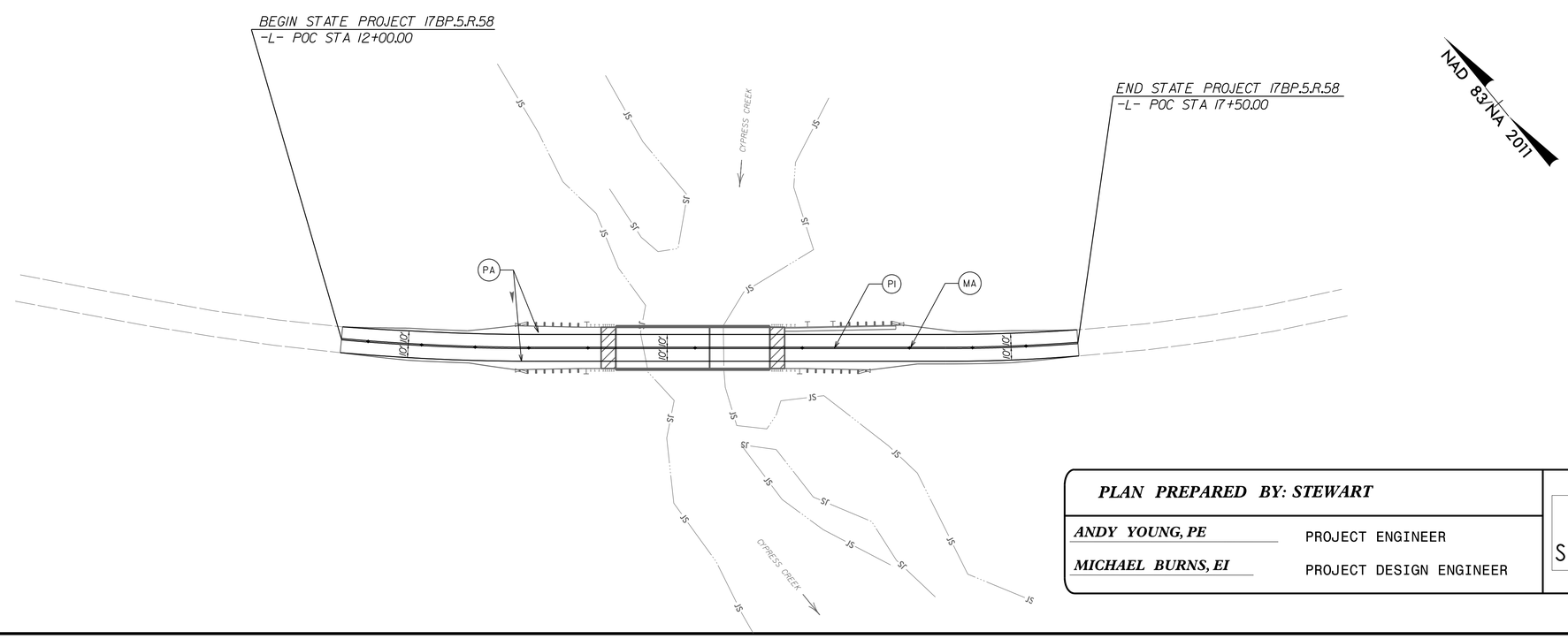

PLAN PREPARED BY: STEWART

ANDY YOUNG, PE	PROJECT ENGINEER
MICHAEL BURNS, EI	PROJECT DESIGN ENGINEER

STEWART
Firm License No. C-1051
421 Fayetteville St.
Suite 400
Raleigh, NC 27601
T 919.380.8750
www.stewartinc.com

12/2/2015
...\TCP\340071_TC_PMP_01.dgn
USER:ayoung

TIP PROJECT: 17BP.5.R.58

STATE	STATE PROJECT REFERENCE NO.	SHEET NO.	TOTAL SHEETS
N.C.	17BP.5.R.58	EC-1	

STATE PROJ. NO.	F. A. PROJ. NO.	DESCRIPTION

STATE OF NORTH CAROLINA
DIVISION OF HIGHWAYS

PLAN FOR PROPOSED
HIGHWAY EROSION CONTROL

FRANKLIN COUNTY

LOCATION: BRIDGE NO. 71 OVER CYPRESS CREEK ON SR 1636 (SYKES ROAD)

TYPE OF WORK: GRADING, DRAINAGE, PAVING, AND STRUCTURE

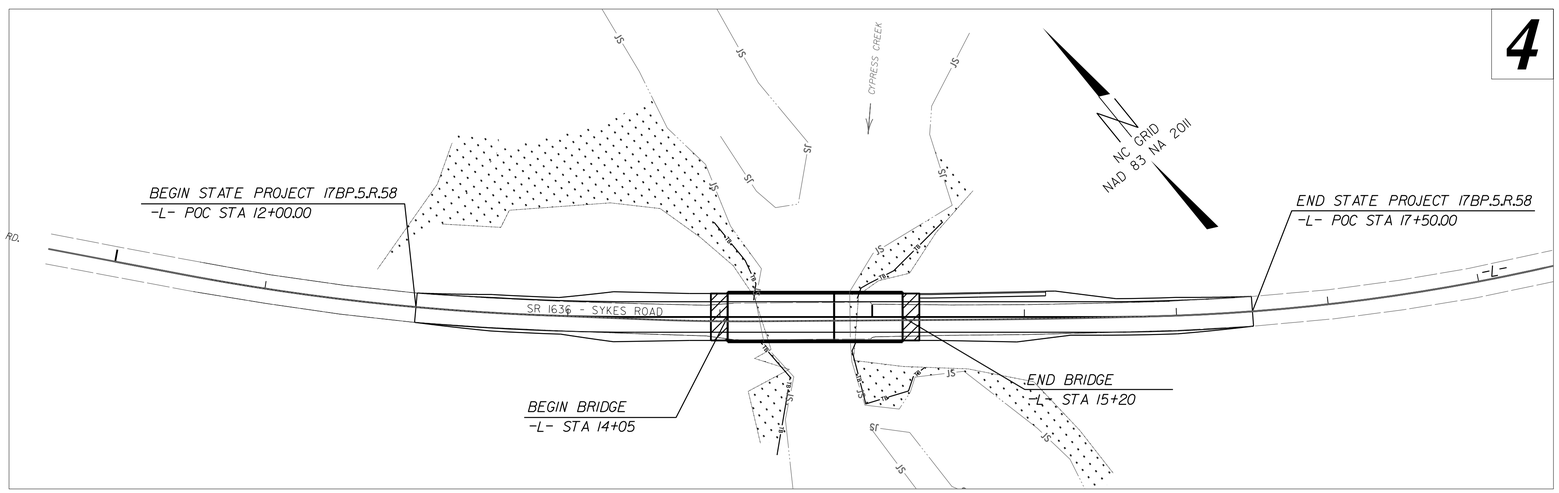

EROSION AND SEDIMENT CONTROL MEASURES

Std. #	Description	Symbol
1630.03	Temporary Silt Ditch	TSD
1630.05	Temporary Diversion	TD
1605.01	Temporary Silt Fence	
1606.01	Special Sediment Control Fence	
1622.01	Temporary Berms and Slope Drains	
1630.02	Silt Basin Type B	
1633.01	Temporary Rock Silt Check Type-A	
	Temporary Rock Silt Check Type-A with Matting and Polyacrylamide (PAM)	
1633.02	Temporary Rock Silt Check Type-B	
	Wattle/ Coir Fiber Wattle	EW CFW
	Wattle/ Coir Fiber Wattle with Polyacrylamide (PAM)	
1634.01	Temporary Rock Sediment Dam Type-A	
1634.02	Temporary Rock Sediment Dam Type-B	
1635.01	Rock Pipe Inlet Sediment Trap Type-A	
1635.02	Rock Pipe Inlet Sediment Trap Type-B	
1630.04	Stilling Basin	
1630.06	Special Stilling Basin	
	Rock Inlet Sediment Trap:	
1632.01	Type A	A
1632.02	Type B	B
1632.03	Type C	C
	Skimmer Basin	
	Tiered Skimmer Basin	
	Infiltration Basin	

THIS PROJECT CONTAINS EROSION CONTROL PLANS FOR CLEARING AND GRUBBING PHASE OF CONSTRUCTION.

THIS PROJECT HAS BEEN DESIGNED TO SENSITIVE WATERSHED STANDARDS.

ENVIRONMENTALLY SENSITIVE AREA(S) EXIST ON THIS PROJECT

Refer To E. C. Special Provisions for Special Considerations.

GRAPHIC SCALE

25 0 50

PLANS

25 0 50

PROFILE (HORIZONTAL)

5 0 10

PROFILE (VERTICAL)

THESE EROSION AND SEDIMENT CONTROL PLANS COMPLY WITH THE REGULATIONS SET FORTH BY THE NCG-010000 GENERAL CONSTRUCTION PERMIT EFFECTIVE AUGUST 3, 2011 AND ISSUED BY THE NORTH CAROLINA DEPARTMENT OF ENVIRONMENT AND NATURAL RESOURCES DIVISION OF WATER RESOURCES.

Prepared in the Office of:

ECOLOGICAL ENGINEERING

NC FIRM LICENSE No: F-1148
1151 SE Cary Parkway
Suite 101
Cary, NC 27518
(919) 557-0929

2012 STANDARD SPECIFICATIONS

Designed by:

BRANDON BARHAM — ***3368***

NAME — *LEVEL III CERTIFICATION NO.*

Reviewed in the Office of:

ROADSIDE ENVIRONMENTAL UNIT

1 South Wilmington St.
Raleigh, NC 27611

2012 STANDARD SPECIFICATIONS

Reviewed by:

Roadway Standard Drawings

The following roadway english standards as appear in "Roadway Standard Drawings"– Roadway Design Unit – N. C. Department of Transportation – Raleigh, N. C., dated January 2012 and the latest revison thereto are applicable to this project and by reference hereby are considered a part of these plans.

1604.01	Railroad Erosion Control Detail	1632.01	Rock Inlet Sediment Trap Type A
1605.01	Temporary Silt Fence	1632.02	Rock Inlet Sediment Trap Type B
1606.01	Special Sediment Control Fence	1632.03	Rock Inlet Sediment Trap Type C
1607.01	Gravel Construction Entrance	1633.01	Temporary Rock Silt Check Type A
1622.01	Temporary Berms and Slope Drains	1633.02	Temporary Rock Silt Check Type B
1630.01	Riser Basin	1634.01	Temporary Rock Sediment Dam Type A
1630.02	Silt Basin Type B	1634.02	Temporary Rock Sediment Dam Type B
1630.03	Temporary Silt Ditch	1635.01	Rock Pipe Inlet Sediment Trap Type A
1630.04	Stilling Basin	1635.02	Rock Pipe Inlet Sediment Trap Type B
1630.05	Temporary Diversion	1640.01	Coir Fiber Baffle
1630.06	Special Stilling Basin	1645.01	Temporary Stream Crossing
1631.01	Matting Installation		

10/6/2015
12:24:24 PM
USER:kbarham
14871_Rev_EC_TSH.dgn

PROJECT REFERENCE NO.	SHEET NO.
15BP.5.R.58	EC-02
R/W SHEET NO.	
ROADWAY DESIGN ENGINEER	HYDRAULICS ENGINEER

WATTLE WITH POLYACRYLAMIDE (PAM) DETAIL

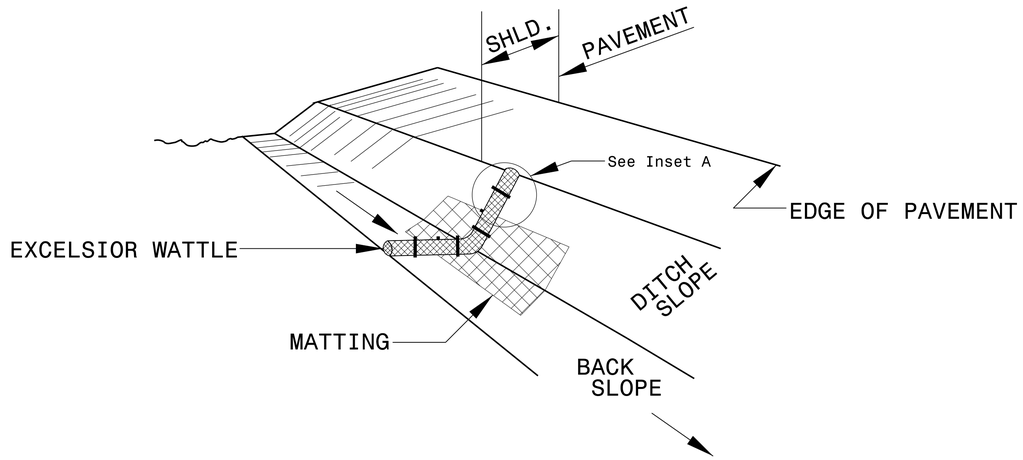

ISOMETRIC VIEW

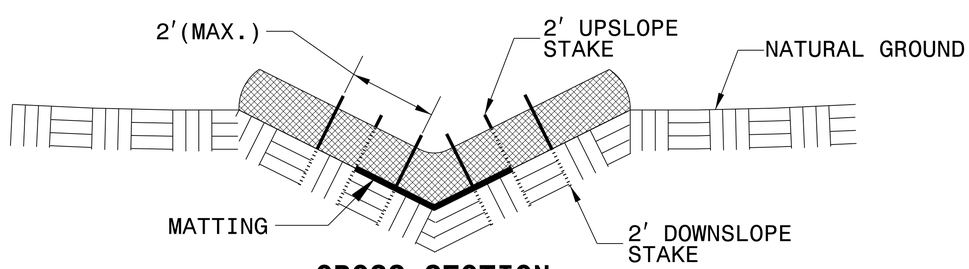

CROSS SECTION VEE DITCH

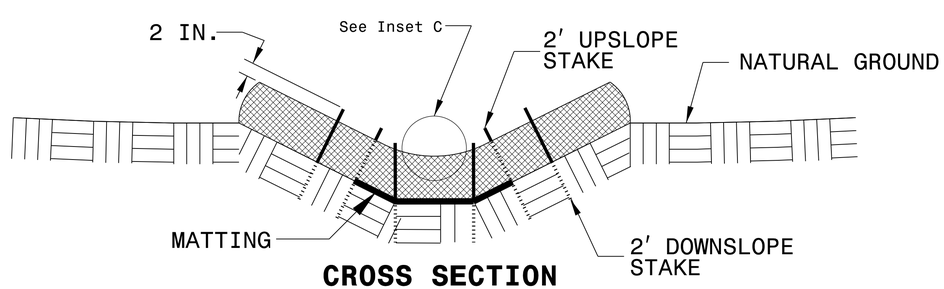

CROSS SECTION TRAPEZOIDAL DITCH

NOTES:

USE MINIMUM 12 IN. DIAMETER EXCELSIOR WATTLE.

USE 2 FT. WOODEN STAKES WITH A 2 IN. BY 2 IN. NOMINAL CROSS SECTION.

ONLY INSTALL WATTLE(S) TO A HEIGHT IN DITCH SO FLOW WILL NOT WASH AROUND WATTLE AND SCOUR DITCH SLOPES AND AS DIRECTED.

INSTALL A MINIMUM OF 2 UPSLOPE STAKES AND 4 DOWNSLOPE STAKES AT AN ANGLE TO WEDGE WATTLE TO BOTTOM OF DITCH.

PROVIDE STAPLES MADE OF 0.125 IN. DIAMETER STEEL WIRE FORMED INTO A U SHAPE NOT LESS THAN 12″ IN LENGTH.

INSTALL STAPLES APPROXIMATELY EVERY 1 LINEAR FOOT ON BOTH SIDES OF WATTLE AND AT EACH END TO SECURE IT TO THE SOIL.

INSTALL MATTING IN ACCORDANCE WITH SECTION 1631 OF THE STANDARD SPECIFICATIONS.

PRIOR TO POLYACRYLAMIDE (PAM) APPLICATION, OBTAIN A SOIL SAMPLE FROM PROJECT LOCATION, AND FROM OFFSITE MATERIAL, AND ANALYZE FOR APPROPRIATE PAM FLOCCULANT TO BE APPLIED TO EACH WATTLE.

INITIALLY APPLY 2 OUNCES OF ANIONIC OR NEUTRALLY CHARGED PAM OVER WATTLE WHERE WATER WILL FLOW AND 1 OUNCE OF PAM ON MATTING ON EACH SIDE OF WATTLE. REAPPLY PAM AFTER EVERY RAINFALL EVENT THAT IS EQUAL TO OR EXCEEDS 0.50 IN.

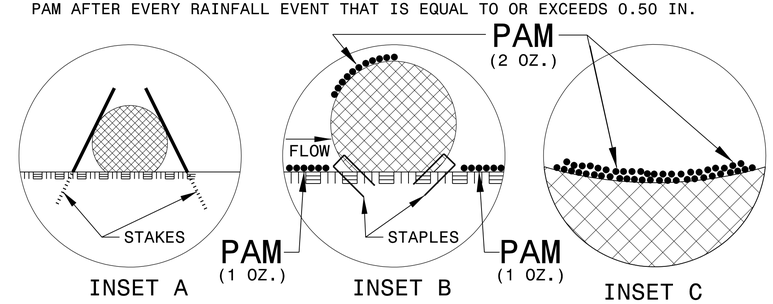

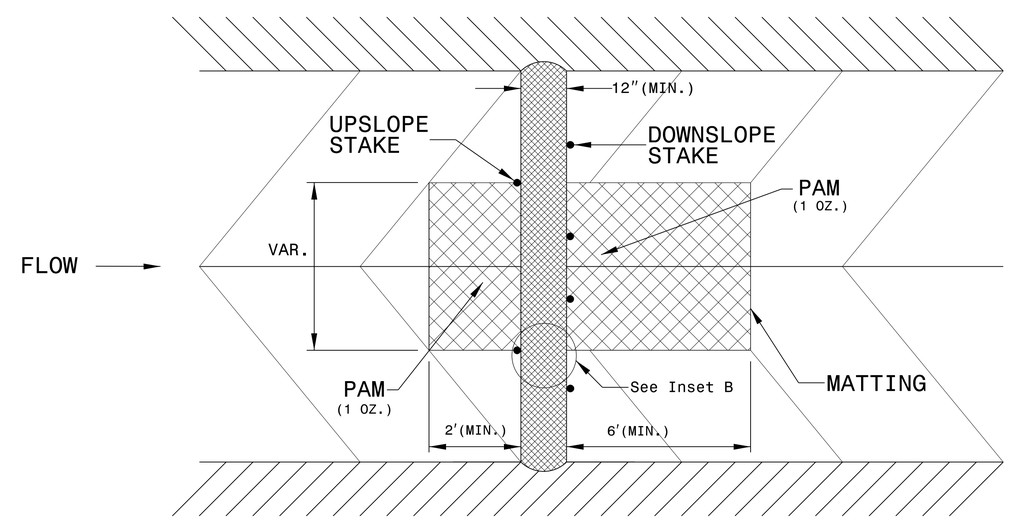

TOP VIEW

PROJECT REFERENCE NO.	SHEET NO.
15BP.5.R.58	EC-03
ROADWAY DESIGN ENGINEER	HYDRAULICS ENGINEER

DIVISION OF HIGHWAYS
STATE OF NORTH CAROLINA

SOIL STABILIZATION TIMEFRAMES

SITE DESCRIPTION	STABILIZATION TIME	TIMEFRAME EXCEPTIONS
PERIMETER DIKES, SWALES, DITCHES AND SLOPES	7 DAYS	NONE
HIGH QUALITY WATER (HQW) ZONES	7 DAYS	NONE
SLOPES STEEPER THAN 3:1	7 DAYS	IF SLOPES ARE 10' OR LESS IN LENGTH AND ARE NOT STEEPER THAN 2:1, 14 DAYS ARE ALLOWED.
SLOPES 3:1 OR FLATTER	14 DAYS	7 DAYS FOR SLOPES GREATER THAN 50' IN LENGTH.
ALL OTHER AREAS WITH SLOPES FLATTER THAN 4:1	14 DAYS	NONE, EXCEPT FOR PERIMETERS AND HQW ZONES.

PROJECT REFERENCE NO.	SHEET NO.
17BP.5.R.58	EC-04/CONST.04
R/W SHEET NO.	
ROADWAY DESIGN ENGINEER	HYDRAULICS ENGINEER

STEWART
Firm License No. C-1051
421 Fayetteville St.
Suite 400
Raleigh, NC 27601
T 919.380.8750
www.stewartinc.com

NC FIRM LICENSE No:F-1148
1151 SE Cary Parkway, Suite 101
Cary, NC 27511
(919) 557-0929
ECOLOGICAL ENGINEERING

CLEARING AND GRUBBING
EROSION CONTROL FOR
CONSTRUCTION SHEET 4

DETAIL 1
CUT DITCH
(Not to Scale)

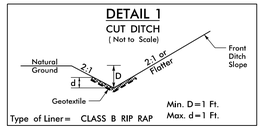

Type of Liner= CLASS B RIP RAP

FROM STA. 13+00 TO STA. 13+65 -L- LT

DETAIL 2
BANK STABILIZATION
(Not to Scale)

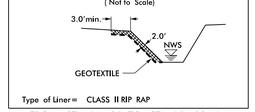

Type of Liner= CLASS II RIP RAP

FROM STA 14+85 TO STA 15+00 -L-

DETAIL 3
TEMPORARY CAUSEWAY
(NOT TO SCALE)

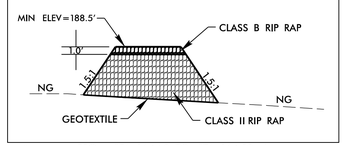

FROM STA 14+60 TO STA 14+92 -L-

INSTALL +/- 100 SY 500G COIR FIBER
MATTING ON EXCAVATED BENCH UNDER BRIDGE

NC GRID
NAD 83 NSRS 2011

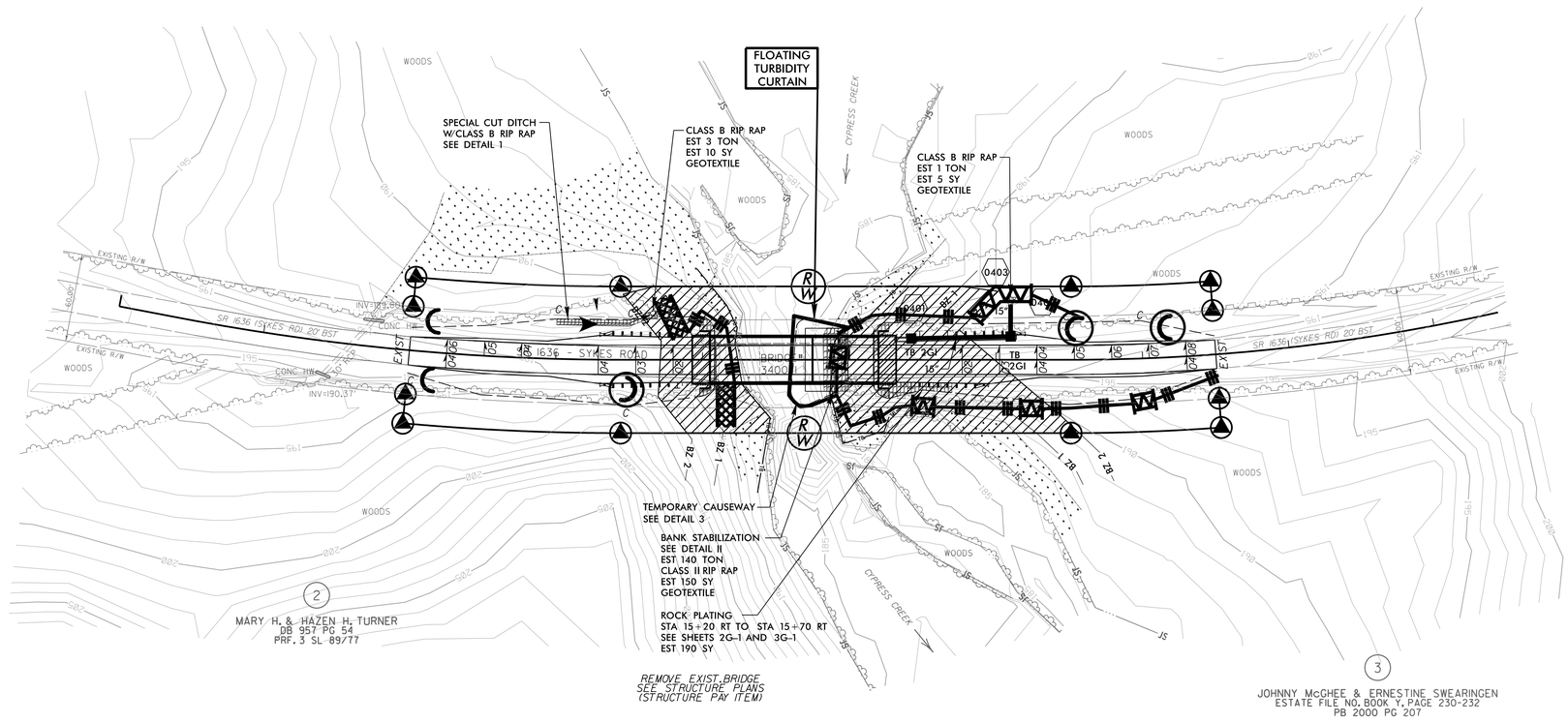

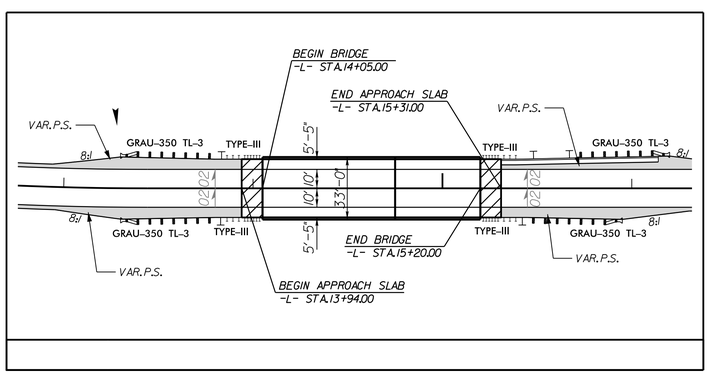

ENVIRONMENTALLY SENSITIVE AREA
SEE PROJECT SPECIAL PROVISIONS

LOCATION OF CONCRETE WASHOUT TO BE DETERMINED BY THE ENGINEER

REVISIONS

8/17/99

5/17/2016
J:\Design\3400071_Rev_EC_CG.dgn
USER: RFHaris

PROJECT REFERENCE NO.	SHEET NO.
17BP.5.R.58	EC-05/CONST.04
R/W SHEET NO.	
ROADWAY DESIGN ENGINEER	HYDRAULICS ENGINEER

STEWART
Firm License No. C-1051
421 Fayetteville St.
Suite 400
Raleigh, NC 27601
T 919.380.8750
www.stewartinc.com

NC FIRM LICENSE No: F-1148
1151 SE Cary Parkway, Suite 101
Cary, NC 27518
(919) 557-0929
ECOLOGICAL ENGINEERING

8/17/99

REVISIONS

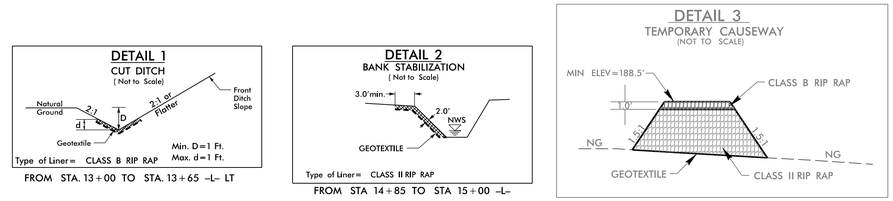

INSTALL +/- 100 SY 500G COIR FIBER MATTING ON EXCAVATED BENCH UNDER BRIDGE

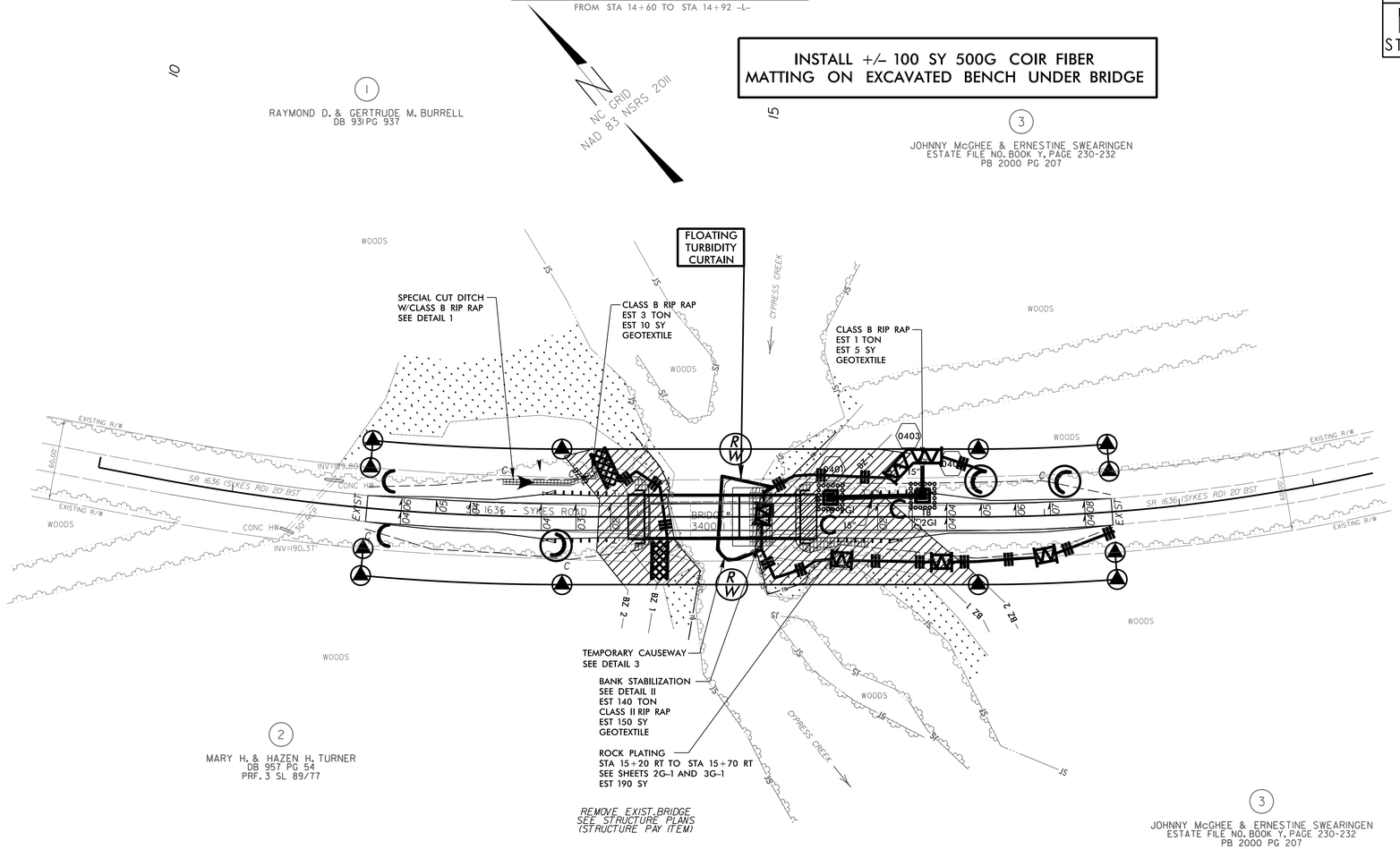

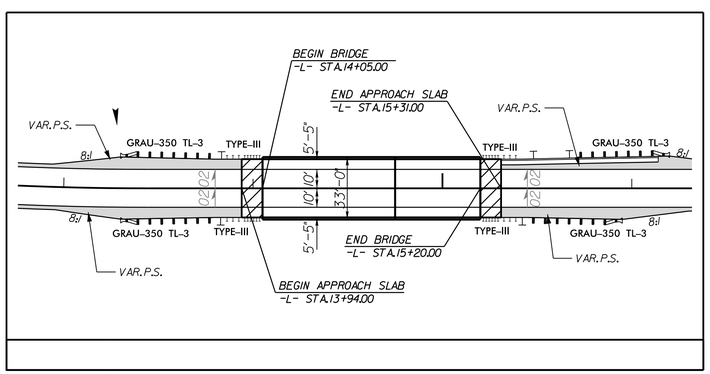

ENVIRONMENTALLY SENSITIVE AREA
SEE PROJECT SPECIAL PROVISIONS

LOCATION OF CONCRETE WASHOUT TO BE DETERMINED BY THE ENGINEER

5/17/2016
...\Design\340071_Reu_EC_Final.dgn
USER:Ekeus

STATE	STATE PROJECT REFERENCE NO.	SHEET NO.	TOTAL SHEETS
N.C.	173P.5.R.58	RF-1	
STATE PROJ. NO.	F. A. PROJ. NO.	DESCRIPTION	

PLANTING DETAILS

SEEDLING / LINER BAREROOT PLANTING DETAIL

HEALING IN

1. Locate a healing-in site in a shady, well protected area.
2. Excavate a flat bottom trench 12 inches deep and provide drainage.

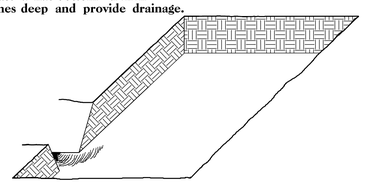

3. Backfill the trench with 2 inches well rotted sawdust. Place a 2 inch layer of well rotted sawdust at a sloping angle at one end of the trench.

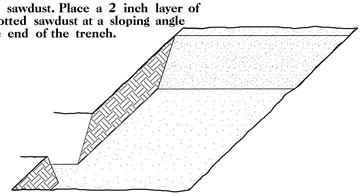

4. Place a single layer of plants against the sloping end so that the root collar is at ground level.

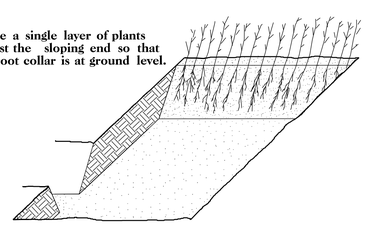

5. Place a 2 inch layer of well rotted sawdust over the roots maintaining a sloping angle.

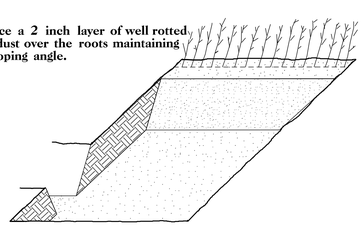

6. Repeat layers of plants and sawdust as necessary and water thoroughly.

DIBBLE PLANTING METHOD
USING THE KBC PLANTING BAR

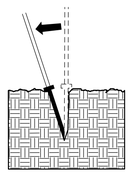

1. Insert planting bar as shown and pull handle toward planter.

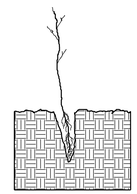

2. Remove planting bar and place seedling at correct depth.

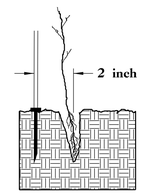

3. Insert planting bar 2 inches toward planter from seedling.

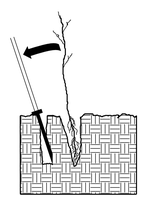

4. Pull handle of bar toward planter, firming soil at bottom.

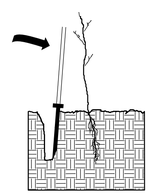

5. Push handle forward firming soil at top.

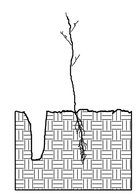

6. Leave compaction hole open. Water thoroughly.

PLANTING NOTES:

PLANTING BAG
During planting, seedlings shall be kept in a moist canvas bag or similar container to prevent the root systems from drying.

KBC PLANTING BAR
Planting bar shall have a blade with a triangular cross section, and shall be 12 inches long, 4 inches wide and 1 inch thick at center.

ROOT PRUNING
All seedlings shall be root pruned, if necessary, so that no roots extend more than 10 inches below the root collar.

REFORESTATION

☐ TREE REFORESTATION SHALL BE PLANTED 6 FT. TO 10 FT. ON CENTER, RANDOM SPACING, AVERAGING 8 FT. ON CENTER, APPROXIMATELY 680 PLANTS PER ACRE.

REFORESTATION

MIXTURE, TYPE, SIZE, AND FURNISH SHALL CONFORM TO THE FOLLOWING:

25%	LIRIODENDRON TULIPIFERA	TULIP POPLAR	12 in – 18 in BR
25%	PLATANUS OCCIDENTALIS	AMERICAN SYCAMORE	12 in – 18 in BR
25%	FRAXINUS PENNSYLVANICA	GREEN ASH	12 in – 18 in BR
25%	BETULA NIGRA	RIVER BIRCH	12 in – 18 in BR

REFORESTATION DETAIL SHEET

N.C.D.O.T. - ROADSIDE ENVIRONMENTAL UNIT

PROJ. REFERENCE NO.	SHEET NO.
17BP.5.R.58	X-1A

STATE OF NORTH CAROLINA
DIVISION OF HIGHWAYS

DOCUMENT NOT CONSIDERED FINAL
UNLESS ALL SIGNATURES COMPLETED

NOTE: EMBANKMENT COLUMN INCLUDES BACKFILL FOR UNDERCUT

CROSS-SECTION SUMMARY

Station L	Uncl. Exc. (cu. yd.)	Embt (cu. yd.)
12+00.00	0	0
12+50.00	23	17
13+00.00	27	32
13+50.00	31	40
14+00.00	15	66

Station L	Uncl. Exc. (cu. yd.)	Embt (cu. yd.)
15+50.00	0	0
16+00.00	10	38
16+50.00	14	28
17+00.00	20	28
17+50.00	26	14

PROJ. REFERENCE NO.	SHEET NO.
17BP.5.R.58	X-1

DOCUMENT NOT CONSIDERED FINAL UNLESS ALL SIGNATURES COMPLETED

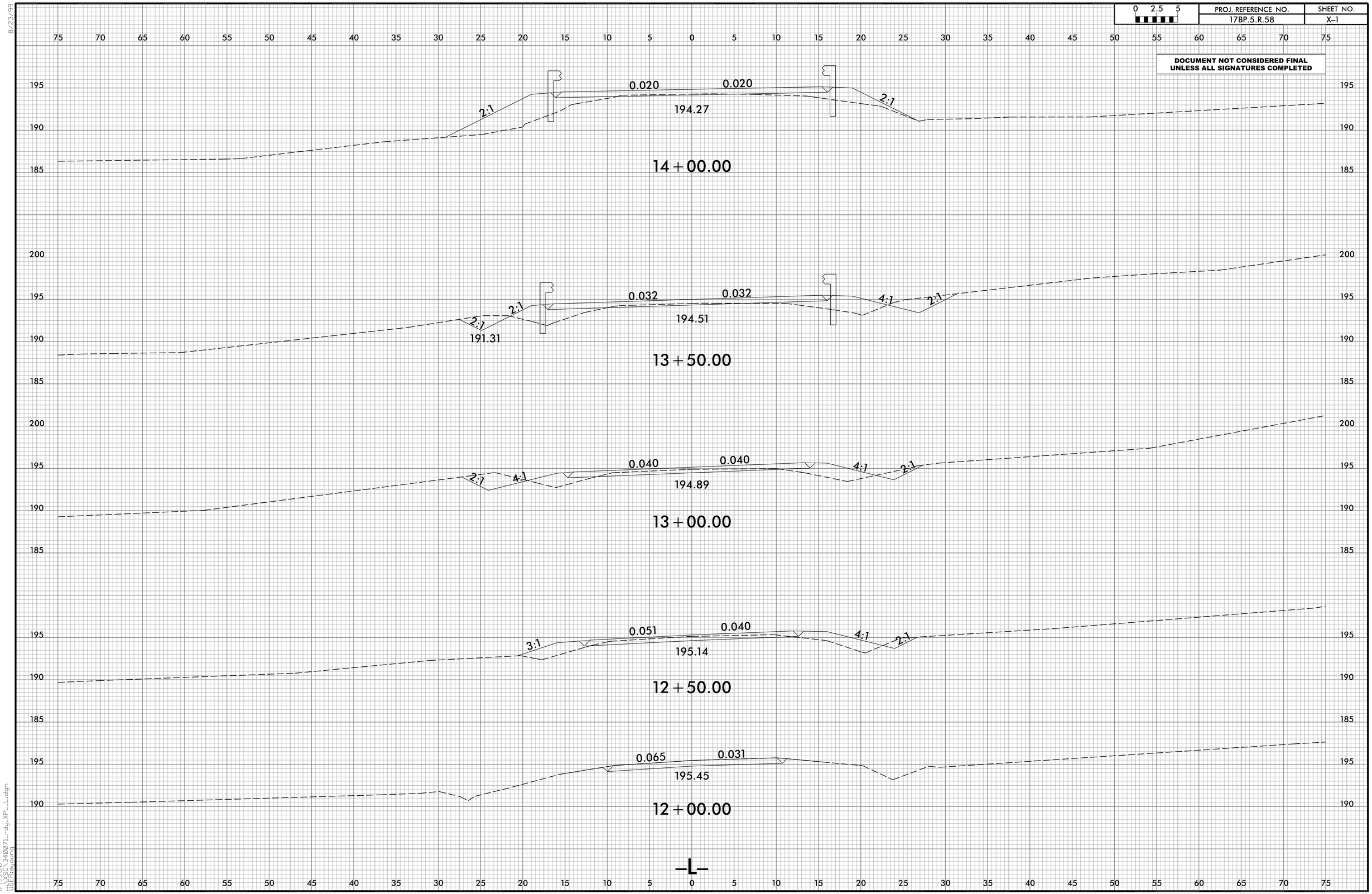

8/23/99

1/7/2016
...\XSC\340071_rdy_XPL_L.dgn
USER:ayoung

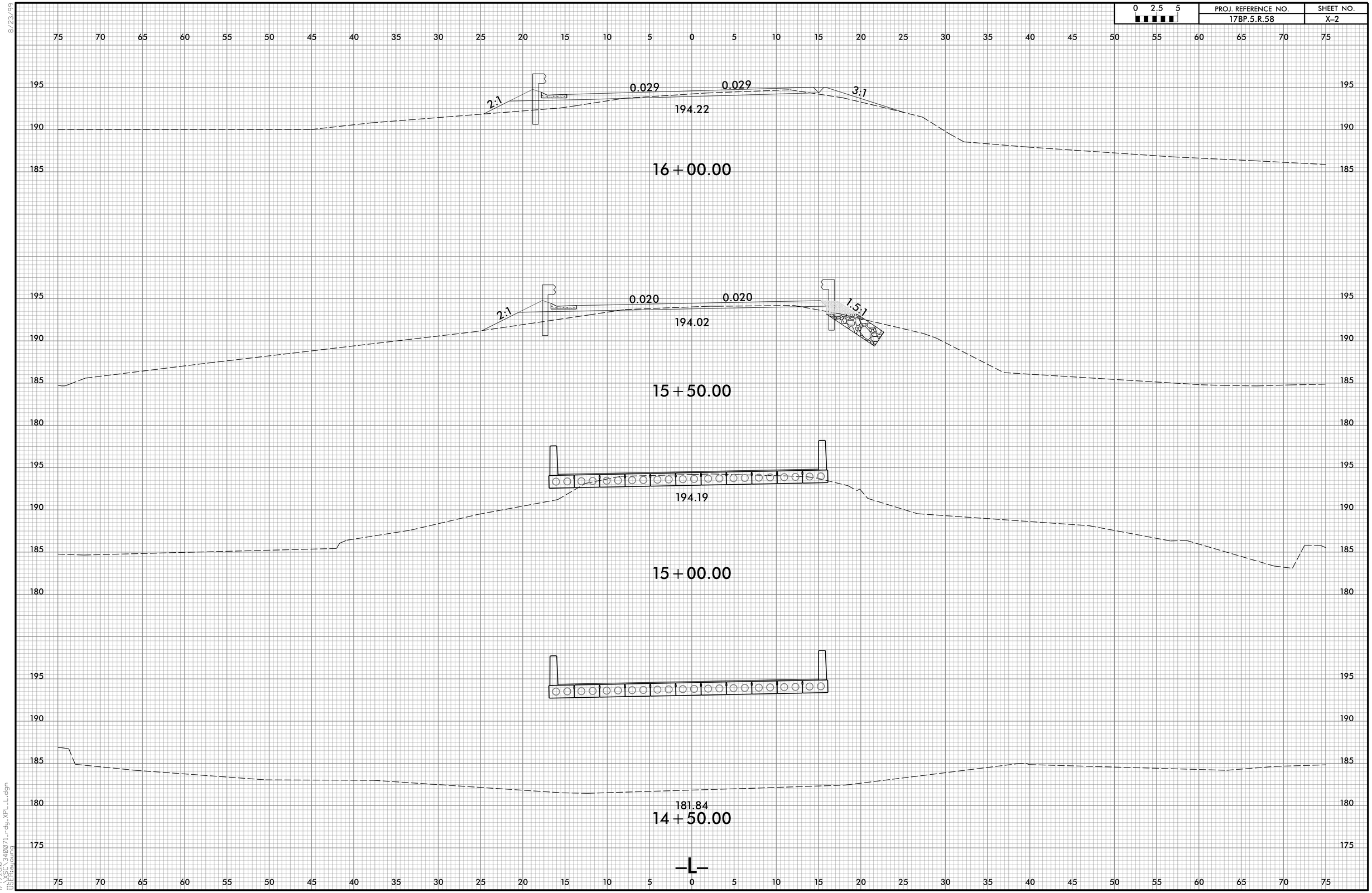

8/23/99

1/7/2016
...\XSC\340071_rdy_XPL_L.dgn
USER:ayoung

PROJ. REFERENCE NO.	SHEET NO.
17BP.5.R.58	X-3

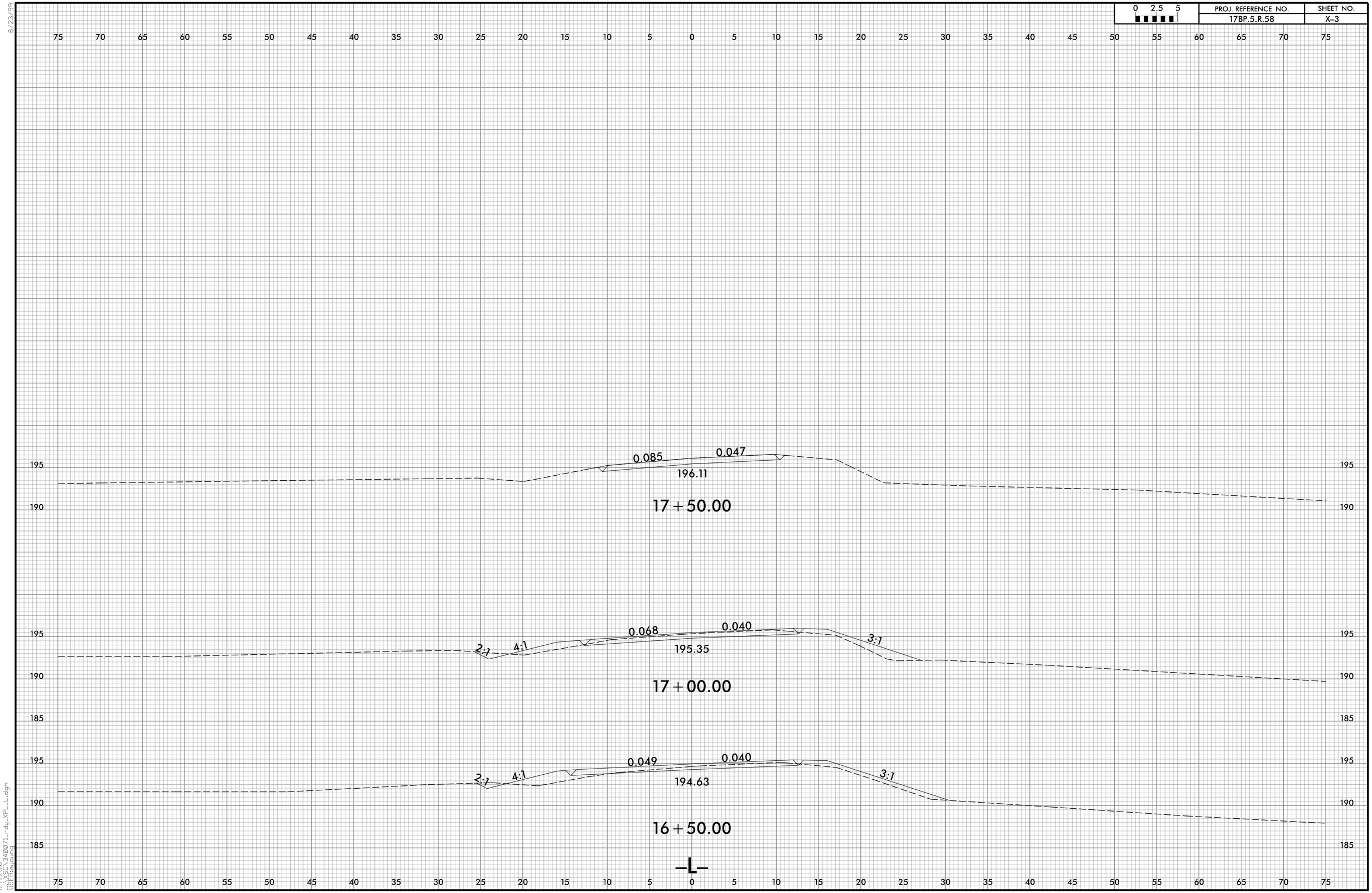

8/23/99

1/7/2016
...\XSC\340071_rdy_XPL_L.dgn
USER:ayoung

DocuSign Envelope ID: E4E7C76D-30D2-4EF6-88EA-F70D5C11C909

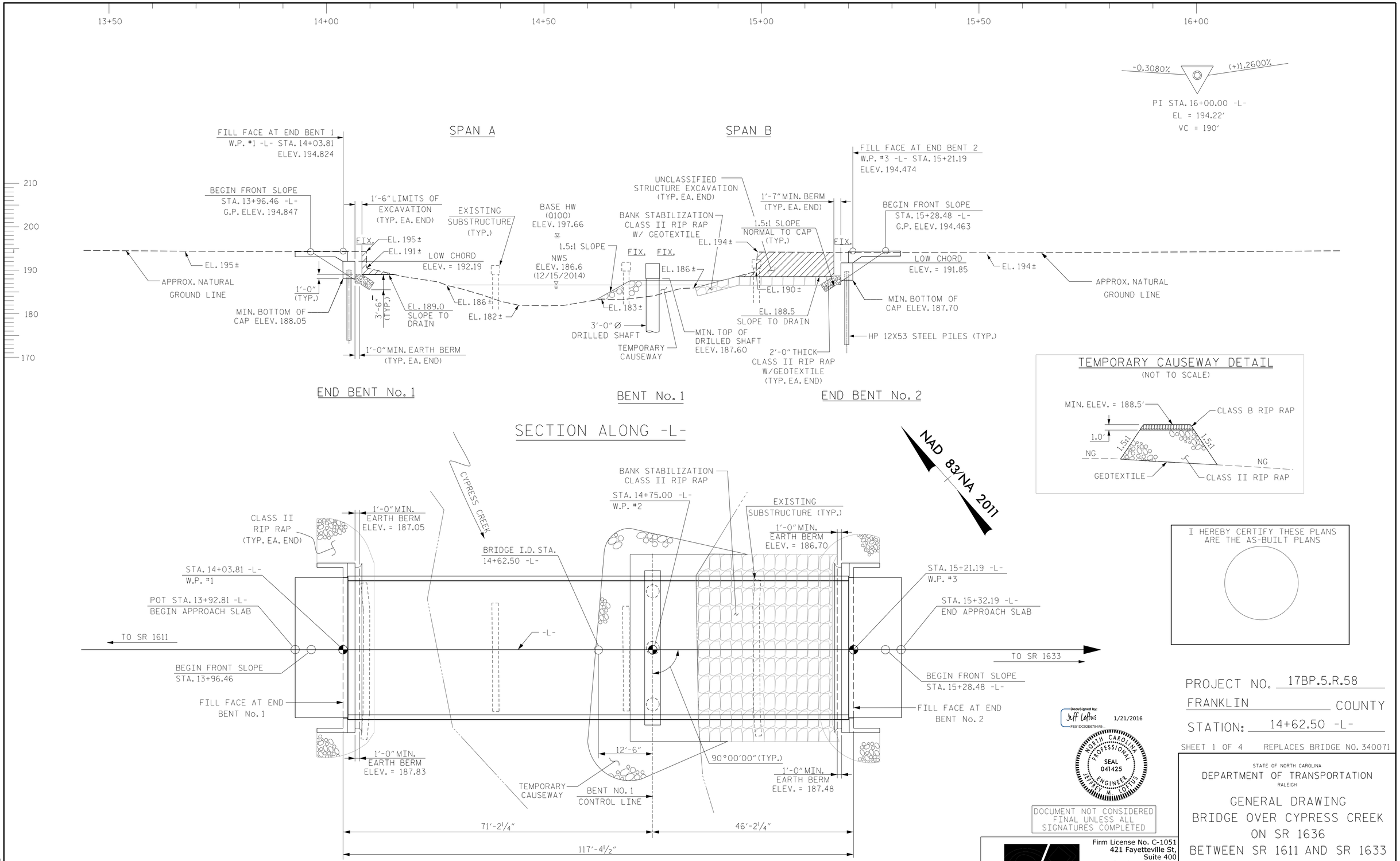

I HEREBY CERTIFY THESE PLANS ARE THE AS-BUILT PLANS

PROJECT NO. 17BP.5.R.58

FRANKLIN COUNTY

STATION: 14+62.50 -L-

SHEET 1 OF 4 REPLACES BRIDGE NO. 340071

DocuSigned by: Jeff Loftus FE51DC02E6764A8 1/21/2016

NORTH CAROLINA PROFESSIONAL SEAL 041425 ENGINEER JEFFREY M. LOFTUS

DOCUMENT NOT CONSIDERED FINAL UNLESS ALL SIGNATURES COMPLETED

STATE OF NORTH CAROLINA
DEPARTMENT OF TRANSPORTATION
RALEIGH

GENERAL DRAWING
BRIDGE OVER CYPRESS CREEK
ON SR 1636
BETWEEN SR 1611 AND SR 1633

STEWART

Firm License No. C-1051
421 Fayetteville St,
Suite 400
Raleigh, NC 27601
T 919.380.8750
www.stewartinc.com

REVISIONS							SHEET NO.
NO.	BY:	DATE:	NO.	BY:	DATE:		S-1
1			3				TOTAL SHEETS
2			4				19

DRAWN BY: H.ASSFOURA DATE : 03/15
CHECKED BY: J.LOFTUS DATE : 03/15
DESIGN ENGINEER OF RECORD: J.LOFTUS DATE : 03/15

1/8/2016
...\400_001_17BP5R58_SMU_GD01.dgn
USER:jloftus

DocuSign Envelope ID: E4E7C76D-30D2-4EF6-88EA-F70D5C11C909

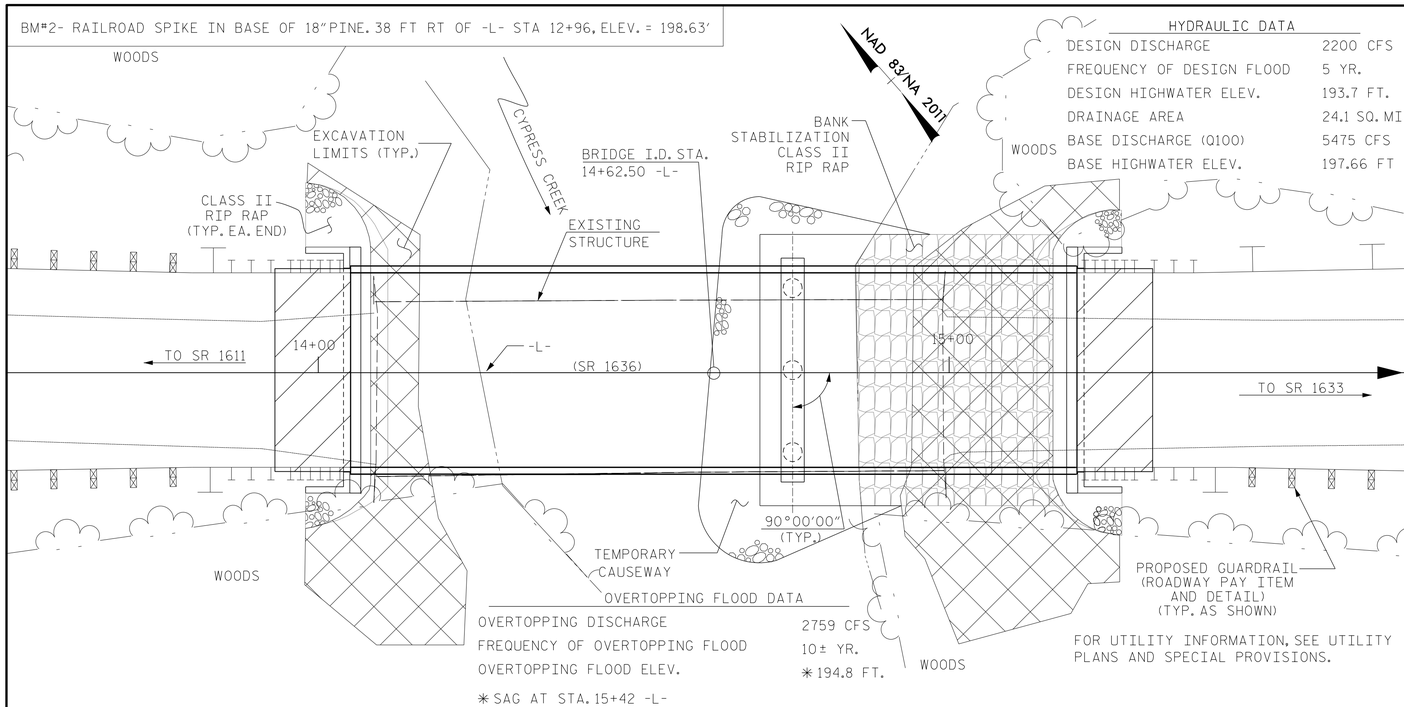

HYDRAULIC DATA

DESIGN DISCHARGE	2200 CFS
FREQUENCY OF DESIGN FLOOD	5 YR.
DESIGN HIGHWATER ELEV.	193.7 FT.
DRAINAGE AREA	24.1 SQ. MI.
BASE DISCHARGE (Q100)	5475 CFS
BASE HIGHWATER ELEV.	197.66 FT

OVERTOPPING FLOOD DATA

OVERTOPPING DISCHARGE	2759 CFS
FREQUENCY OF OVERTOPPING FLOOD	10± YR.
OVERTOPPING FLOOD ELEV.	✳194.8 FT.

✳SAG AT STA. 15+42 -L-

LOCATION SKETCH

NOTES

1. ASSUMED LIVE LOAD = HL-93 OR ALTERNATE LOADING
2. THIS BRIDGE HAS BEEN DESIGNED IN ACCORDANCE WITH THE REQUIREMENTS OF THE AASHTO LRFD BRIDGE DESIGN SPECIFICATIONS
3. THIS BRIDGE IS LOCATED IN SEISMIC ZONE 1.
4. THIS STRUCTURE HAS BEEN DESIGNED IN ACCORDANCE WITH "HEC 18 - EVALUATING SCOUR AT BRIDGES."
5. THE SUBSTRUCTURE OF THE EXISTING BRIDGE INDICATED ON THE PLANS IS FROM THE BEST INFORMATION AVAILABLE. THIS INFORMATION IS SHOWN FOR THE CONVENIENCE OF THE CONTRACTOR. THE CONTRACTOR SHALL HAVE NO CLAIM WHATSOEVER AGAINST THE DEPARTMENT OF TRANSPORTATION FOR ANY DELAYS OR ADDITIONAL COST INCURRED BASED ON DIFFERENCE BETWEEN THE EXISTING BRIDGE SUBSTRUCTURE SHOWN ON THE PLANS AND THE ACTUAL CONDITIONS AT THE PROJECT SITE.
6. THE EXISTING STRUCTURE CONSISTING OF BRIDGE 340071 OF THREE SPANS (30'-3", 30'-0", 30'-3"); PRESTRESSED CONCRETE CHANNEL SECTIONS; 24.25' CLEAR ROADWAY WIDTH SUPPORTED ON REINFORCED CONCRETE CAPS ON TIMBER PILES AND LOCATED AT THE PROPOSED STRUCTURE SHALL BE REMOVED IN ITS ENTIRETY (INCLUDING PILES). THE EXISTING BRIDGE IS PRESENTLY POSTED FOR LOAD LIMIT. SHOULD THE STRUCTURAL INTEGRITY OF THE BRIDGE DETERIORATE DURING CONSTRUCTION OF THE PROPOSED BRIDGE, A LOAD LIMIT MAY BE REDUCED AS FOUND NECESSARY DURING THE LIFE OF THE PROJECT.
7. REMOVAL OF THE EXISTING BRIDGE SHALL BE PERFORMED IN A MANNER THAT PREVENTS DEBRIS FROM FALLING INTO THE WATER. THE CONTRACTOR SHALL SUBMIT DEMOLITION PLANS FOR REVIEW AND REMOVE THE BRIDGE IN ACCORDANCE WITH ARTICLE 402-2 OF THE STANDARD SPECIFICATIONS.
8. FOR ASBESTOS ASSESSMENT, SEE SPECIAL PROVISIONS.
9. FOR SUBMITTAL OF WORKING DRAWINGS, SEE SPECIAL PROVISIONS.
10. FOR FALSEWORK AND FORMWORK, SEE SPECIAL PROVISIONS.
11. FOR CRANE SAFETY, SEE SPECIAL PROVISIONS.
12. FOR GROUT FOR STRUCTURES, SEE SPECIAL PROVISIONS.
13. FOR EROSION CONTROL MEASURES, SEE EROSION CONTROL PLANS.
14. ASPHALT WEARING SURFACE IS INCLUDED IN ROADWAY QUANTITY ON ROADWAY PLANS.
15. THE MATERIAL SHOWN IN THE CROSS-HATCHED AREA ON SHEET S-1 SHALL BE EXCAVATED FOR A DISTANCE OF 35 FT EACH SIDE OF CENTERLINE ROADWAY AS DIRECTED BY THE ENGINEER. THIS WORK WILL BE PAID FOR AT THE CONTRACT LUMP SUM PRICE FOR UNCLASSIFIED STRUCTURE EXCAVATION. SEE SECTION 412 OF THE STANDARD SPECIFICATIONS.
16. AT THE CONTRACTOR'S OPTION, AND UPON REMOVAL OF THE CAUSEWAY, THE CLASS II RIP RAP USED IN THE CAUSEWAY MAY BE PLACED AS RIP RAP SLOPE PROTECTION. SEE SPECIAL PROVISIONS FOR CONSTRUCTION, MAINTENANCE AND REMOVAL OF TEMPORARY ACCESS AT STATION 14+62.50 -L-.
17. FOR OTHER DESIGN DATA AND GENERAL NOTES, SEE SHEET S-19.

TOTAL BILL OF MATERIAL

	CONSTRUCTION, MAINTENANCE, & REMOVAL OF TEMP ACCESS	REMOVAL OF EXISTING STRUCTURE	3'-0"DIA. DRILLED PIERS NOT IN SOIL	3'-0"DIA. DRILLED PIERS IN SOIL	PERMANENT STEEL CASING FOR 3'-0"DIA. DRILLED PIER	SID INSPECTION	CSL TESTING	UNCLASSIFIED STRUCTURE EXCAVATION	CLASS A CONCRETE	BRIDGE APPROACH SLABS	REINF. STEEL	SPIRAL COLUMN REINFORCING STEEL	HP 12X53 STEEL PILES		STEEL PILE POINTS	VERTICAL CONCRETE BARRIER RAIL	RIP RAP CLASS II (2'-0" THICK)	GEOTEXTILE FOR DRAINAGE	ELASTOMERIC BEARINGS	3'-0"x 2'-0" PRESTRESSED CONCRETE CORED SLAB UNITS		ASBESTOS ASSESSMENT
	LUMP SUM	LUMP SUM	LIN. FT.	LIN. FT.	LIN. FT.	EACH	EACH	LUMP SUM	CY. YDS.	LUMP SUM	LBS	LBS	No.	LIN. FT.	EA.	LIN. FT.	TON	SQ. YDS.	LUMP SUM	No.	LIN. FT.	LUMP SUM
SUPERSTRUCTURE										LUMP SUM						230.5			LUMP SUM	22	1265	
END BENT No. 1								LUMP SUM	21.8		2,636		7	70	7		54.0	60.0				
BENT No. 1			26.0	35.8	43.8				15.8		8,694	1150										
END BENT No. 2								LUMP SUM	21.8		2,636		7	70	7		176.9	187.6				
TOTAL	LUMP SUM	LUMP SUM	26.0	35.8	43.8	1	1	LUMP SUM	59.4	LUMP SUM	13,966	1150	14	140	14	230.5	230.9	247.6	LUMP SUM	22	1265	LUMP SUM

FOUNDATION NOTES

1. FOR PILES, SEE SECTION 450 OF THE STANDARD SPECIFICATIONS.
2. PILES AT END BENT NO.1 ARE DESIGNED FOR A FACTORED RESISTANCE OF 81 TONS PER PILE.
3. DRIVE PILES AT END BENT NO.1 TO A REQUIRED DRIVING RESISTANCE OF 135 TONS PER PILE.
4. PILES AT END BENT NO.2 ARE DESIGNED FOR A FACTORED RESISTANCE OF 61 TONS PER PILE.
5. DRIVE PILES AT END BENT NO.2 TO A REQUIRED DRIVING RESISTANCE OF 105 TONS PER PILE.
6. STEEL H-PILE POINTS ARE REQUIRED FOR STEEL H-PILES AT END BENT NO.1 AND END BENT NO.2. FOR STEEL PILE POINTS, SEE SECTION 450 OF THE STANDARD SPECIFICATIONS.
7. FOR DRILLED PIERS, SEE SECTION 411 OF THE STANDARD SPECIFICATIONS.
8. DRILLED PIERS AT BENT NO.1 ARE DESIGNED FOR A FACTORED RESISTANCE OF 425 TONS PER PIER. CHECK FIELD CONDITIONS FOR THE REQUIRED TIP RESISTANCE OF 140 TSF.
9. PERMANENT STEEL CASINGS ARE REQUIRED FOR DRILLED PIERS AT BENT NO.1. DO NOT EXTEND PERMANENT CASINGS BELOW ELEVATIONS 173.0 FT WITHOUT PRIOR APPROVAL FROM THE ENGINEER.
10. INSTALL DRILLED PIERS AT BENT NO.1 TO A TIP ELEVATION NO HIGHER THAN 167.0 FT AND WITH THE REQUIRED TIP RESISTANCE AND PENETRATION OF AT LEAST 6 FT INTO ROCK AS DEFINED BY ARTICLE 411-1 OF THE STANDARD SPECIFICATIONS.
11. THE SCOUR CRITICAL ELEVATION FOR BENT NO.1 IS ELEVATION 173.0 FT. SCOUR CRITICAL ELEVATIONS ARE USED TO MONITOR POSSIBLE SCOUR PROBLEMS DURING THE LIFE OF THE STRUCTURE.
12. CSL TUBES ARE REQUIRED AND CSL TESTING MAY BE REQUIRED FOR DRILLED PIERS. THE ENGINEER WILL DETERMINE THE NEED FOR CSL TESTING. FOR CSL TESTING, SEE SECTION 411 OF THE STANDARD SPECIFICATIONS.
13. DO NOT USE SLURRY CONSTRUCTION FOR DRILLED PIERS AT BENT NO.1.
14. SID INSPECTIONS MAY BE REQUIRED FOR DRILLED PIERS. THE ENGINEER WILL DETERMINE THE NEED FOR SID INSPECTIONS. FOR SID INSPECTIONS, SEE SECTION 411 OF THE STANDARD SPECIFICATIONS.

DocuSigned by: Jeff Loftus FE51DC02E6794A9... 1/21/2016

NORTH CAROLINA PROFESSIONAL SEAL 041425 ENGINEER JEFFREY M. LOFTUS

DOCUMENT NOT CONSIDERED FINAL UNLESS ALL SIGNATURES COMPLETED

PROJECT NO. 17BP.5.R.58
FRANKLIN COUNTY
STATION: 14+62.50 -L-

SHEET 2 OF 4

STATE OF NORTH CAROLINA
DEPARTMENT OF TRANSPORTATION
RALEIGH

GENERAL DRAWING
BRIDGE OVER CYPRESS CREEK
ON SR 1636
BETWEEN SR 1611 AND SR 1633

Firm License No. C-1051
421 Fayetteville St,
Suite 400
Raleigh, NC 27601
T 919.380.8750
www.stewartinc.com
STEWART

REVISIONS						SHEET NO.
NO.	BY:	DATE:	NO.	BY:	DATE:	S-2
1			3			TOTAL SHEETS
2			4			19

DRAWN BY: H.ASSFOURA DATE: 03/15
CHECKED BY: J.LOFTUS DATE: 03/15
DESIGN ENGINEER OF RECORD: J.LOFTUS DATE: 03/15

1/21/2016
...\400_002_17BP5R58_SWU_GD02.dgn
USER:jloftus

DocuSign Envelope ID: E4E7C76D-30D2-4EF6-88EA-F70D5C11C909

LOAD AND RESISTANCE FACTOR RATING (LRFD) SUMMARY FOR PRESTRESSED CONCRETE GIRDERS

LEVEL		VEHICLE	WEIGHT (W) (TONS)	CONTROLLING LOAD RATING	MINIMUM RATING FACTORS (RF)	TONS = W X RF	STRENGTH I LIMIT STATE											SERVICE III LIMIT STATE						COMMENT NUMBER
							LIVELOAD FACTORS	MOMENT					SHEAR					LIVELOAD FACTORS	MOMENT					
								DISTRIBUTION FACTORS (DF)	RATING FACTOR	SPAN	GIRDER LOCATION	DISTANCE FROM LEFT END OF SPAN (ft)	DISTRIBUTION FACTORS (DF)	RATING FACTOR	SPAN	GIRDER LOCATION	DISTANCE FROM LEFT END OF SPAN (ft)		DISTRIBUTION FACTORS (DF)	RATING FACTOR	SPAN	GIRDER LOCATION	DISTANCE FROM LEFT END OF SPAN (ft)	
DESIGN LOAD RATING		HL-93(Inv)	N/A	1	1.006	--	1.75	0.273	1.03	70'	EL	34.5	0.507	1.32	70'	EL	6.9	0.80	0.273	1.01	70'	EL	34.5	
		HL-93(Opr)	N/A	--	1.341	--	1.35	0.273	1.34	70'	EL	34.5	0.507	1.72	70'	EL	6.9	N/A	--	--	--	--	--	
		HS-20(Inv)	36.000	2	1.306	47.02	1.75	0.273	1.34	70'	EL	34.5	0.507	1.65	70'	EL	6.9	0.80	0.273	1.31	70'	EL	34.5	
		HS-20(Opr)	36.000	--	1.74	62.64	1.35	0.273	1.74	70'	EL	34.5	0.507	2.14	70'	EL	6.9	N/A	--	--	--	--	--	
LEGAL LOAD RATING	SV	SNSH	13.500	--	2.917	39.379	1.4	0.273	3.75	70'	EL	34.5	0.507	4.87	70'	EL	6.9	0.80	0.273	2.92	70'	EL	34.5	
		SNGARBS2	20.000	--	2.187	43.741	1.4	0.273	2.81	70'	EL	34.5	0.507	3.47	70'	EL	6.9	0.80	0.273	2.19	70'	EL	34.5	
		SNAGRIS2	22.000	--	2.077	45.69	1.4	0.273	2.67	70'	EL	34.5	0.507	3.23	70'	EL	6.9	0.80	0.273	2.08	70'	EL	34.5	
		SNCOTTS3	27.250	--	1.452	39.565	1.4	0.273	1.87	70'	EL	34.5	0.507	2.43	70'	EL	6.9	0.80	0.273	1.45	70'	EL	34.5	
		SNAGGRS4	34.925	--	1.218	42.554	1.4	0.273	1.57	70'	EL	34.5	0.507	2.03	70'	EL	6.9	0.80	0.273	1.22	70'	EL	34.5	
		SNS5A	35.550	--	1.191	42.346	1.4	0.273	1.53	70'	EL	34.5	0.507	2.06	70'	EL	6.9	0.80	0.273	1.19	70'	EL	34.5	
		SNS6A	39.950	--	1.095	43.747	1.4	0.273	1.41	70'	EL	34.5	0.507	1.88	70'	EL	6.9	0.80	0.273	1.10	70'	EL	34.5	
		SNS7B	42.000	--	1.043	43.801	1.4	0.273	1.34	70'	EL	34.5	0.507	1.85	70'	EL	6.9	0.80	0.273	1.04	70'	EL	34.5	
	TTST	TNAGRIT3	33.000	--	1.336	44.087	1.4	0.273	1.72	70'	EL	34.5	0.507	2.23	70'	EL	6.9	0.80	0.273	1.34	70'	EL	34.5	
		TNT4A	33.075	--	1.342	44.401	1.4	0.273	1.72	70'	EL	34.5	0.507	2.17	70'	EL	6.9	0.80	0.273	1.34	70'	EL	34.5	
		TNT6A	41.600	--	1.1	45.746	1.4	0.273	1.41	70'	EL	34.5	0.507	1.98	70'	EL	6.9	0.80	0.273	1.10	70'	EL	34.5	
		TNT7A	42.000	--	1.106	46.462	1.4	0.273	1.42	70'	EL	34.5	0.507	1.94	70'	EL	6.9	0.80	0.273	1.11	70'	EL	34.5	
		TNT7B	42.000	--	1.147	48.18	1.4	0.273	1.47	70'	EL	34.5	0.507	1.8	70'	EL	6.9	0.80	0.273	1.15	70'	EL	34.5	
		TNAGRIT4	43.000	--	1.089	46.838	1.4	0.273	1.4	70'	EL	34.5	0.507	1.74	70'	EL	6.9	0.80	0.273	1.09	70'	EL	34.5	
		TNAGT5A	45.000	--	1.026	46.175	1.4	0.273	1.32	70'	EL	34.5	0.507	1.74	70'	EL	6.9	0.80	0.273	1.03	70'	EL	34.5	
		TNAGT5B	45.000	3	1.013	45.579	1.4	0.273	1.3	70'	EL	34.5	0.507	1.66	70'	EL	6.9	0.80	0.273	1.01	70'	EL	34.5	

LOAD FACTORS:

	LIMIT STATE	γ_{DC}	γ_{DW}
DESIGN LOAD RATING FACTORS	STRENGTH I	1.25	1.50
	SERVICE III	1.00	1.00

NOTES:

MINIMUM RATING FACTORS ARE BASED ON THE STRENGTH I AND SERVICE III LIMIT STATES.

ALLOWABLE STRESSES FOR SERVICE III LIMIT STATE ARE AS REQUIRED FOR DESIGN.

CONTROLLING LOAD RATING

(1) DESIGN LOAD RATING (HL-93)

(2) DESIGN LOAD RATING (HS-20)

(3) LEGAL LOAD RATING **

** SEE CHART FOR VEHICLE TYPE

GIRDER LOCATION

I - INTERIOR GIRDER
EL - EXTERIOR LEFT GIRDER
ER - EXTERIOR RIGHT GIRDER

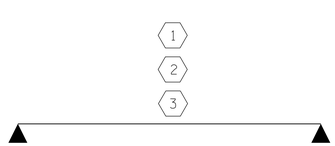

LRFR SUMMARY

FOR SPAN 'A'

DocuSigned by: Jeff Loftus 1/21/2016
FE51DC02E7844AB...

NORTH CAROLINA PROFESSIONAL SEAL 041425 ENGINEER JEFFREY M. LOFTUS

DOCUMENT NOT CONSIDERED FINAL UNLESS ALL SIGNATURES COMPLETED

STEWART

Firm License No. C-1051
421 Fayetteville St,
Suite 400
Raleigh, NC 27601
T 919.380.8750
www.stewartinc.com

PROJECT NO. 17BP.5.R.58

FRANKLIN COUNTY

STATION: 14+62.50 -L-

SHEET 3 OF 4

STATE OF NORTH CAROLINA
DEPARTMENT OF TRANSPORTATION
RALEIGH

STANDARD
LRFR SUMMARY FOR
70' CORED SLAB UNIT
90° SKEW
(NON-INTERSTATE TRAFFIC)

REVISIONS						SHEET NO.
NO.	BY:	DATE:	NO.	BY:	DATE:	S-3
1			3			TOTAL SHEETS
2			4			19

DRAWN BY: H.ASSFOURA DATE: 03/15
CHECKED BY: J. LOFTUS DATE: 06/15
DESIGN ENGINEER OF RECORD: J. LOFTUS DATE: 06/15

12/17/2015
...\400_003_17BP5R58_SMU_LRFR03.dgn
USER:jloftus

DocuSign Envelope ID: E4E7C76D-30D2-4EF6-88EA-F70D5C11C909

LOAD AND RESISTANCE FACTOR RATING (LRFD) SUMMARY FOR PRESTRESSED CONCRETE GIRDERS

LEVEL		VEHICLE	WEIGHT (W) (TONS)	CONTROLLING LOAD RATING	MINIMUM RATING FACTORS (RF)	TONS = W X RF	STRENGTH I LIMIT STATE											SERVICE III LIMIT STATE						COMMENT NUMBER
							LIVELOAD FACTORS	MOMENT					SHEAR					LIVELOAD FACTORS	MOMENT					
								DISTRIBUTION FACTORS (DF)	RATING FACTOR	SPAN	GIRDER LOCATION	DISTANCE FROM LEFT END OF SPAN (ft)	DISTRIBUTION FACTORS (DF)	RATING FACTOR	SPAN	GIRDER LOCATION	DISTANCE FROM LEFT END OF SPAN (ft)		DISTRIBUTION FACTORS (DF)	RATING FACTOR	SPAN	GIRDER LOCATION	DISTANCE FROM LEFT END OF SPAN (ft)	
DESIGN LOAD RATING		HL-93(Inv)	N/A	1	1.54	--	1.75	0.281	1.54	45'	EL	22.0	0.510	2.03	45'	EL	42.3	0.80	0.281	1.74	45'	EL	22.0	
		HL-93(Opr)	N/A	--	2.00	--	1.35	0.281	2.00	45'	EL	22.0	0.510	2.66	45'	EL	42.3	N/A	--	--	--	--	--	
		HS-20(Inv)	36.000	2	1.90	68.40	1.75	0.281	1.90	45'	EL	22.0	0.510	2.42	45'	EL	42.3	0.80	0.281	2.14	45'	EL	22.0	
		HS-20(Opr)	36.000	--	2.46	88.56	1.35	0.281	2.46	45'	EL	22.0	0.510	3.18	45'	EL	42.3	N/A	--	--	--	--	--	
LEGAL LOAD RATING	SV	SNSH	13.500	--	3.39	45.76	1.4	0.281	3.65	45'	EL	22.0	0.510	5.31	45'	EL	35.5	0.80	0.281	3.39	45'	EL	22.0	
		SNGARBS2	20.000	--	2.71	54.20	1.4	0.281	2.93	45'	EL	22.0	0.510	3.91	45'	EL	35.5	0.80	0.281	2.71	45'	EL	22.0	
		SNAGRIS2	22.000	--	2.65	58.30	1.4	0.281	2.83	45'	EL	17.5	0.510	3.66	45'	EL	42.3	0.80	0.281	2.65	45'	EL	22.0	
		SNCOTTS3	27.250	--	1.68	45.78	1.4	0.281	1.81	45'	EL	22.0	0.510	2.63	45'	EL	42.3	0.80	0.281	1.68	45'	EL	22.0	
		SNAGGRS4	34.925	--	1.48	51.68	1.4	0.281	1.60	45'	EL	22.0	0.510	2.24	45'	EL	35.5	0.80	0.281	1.48	45'	EL	22.0	
		SNS5A	35.550	--	1.44	51.19	1.4	0.281	1.56	45'	EL	22.0	0.510	2.32	45'	EL	42.3	0.80	0.281	1.44	45'	EL	22.0	
		SNS6A	39.950	--	1.36	54.33	1.4	0.281	1.46	45'	EL	22.0	0.510	2.15	45'	EL	42.3	0.80	0.281	1.36	45'	EL	22.0	
		SNS7B	42.000	--	1.29	54.18	1.4	0.281	1.40	45'	EL	22.0	0.510	2.16	45'	EL	42.3	0.80	0.281	1.29	45'	EL	22.0	
	TTST	TNAGRIT3	33.000	--	1.67	55.11	1.4	0.281	1.80	45'	EL	22.0	0.510	2.55	45'	EL	42.3	0.80	0.281	1.67	45'	EL	22.0	
		TNT4A	33.075	--	1.68	55.56	1.4	0.281	1.81	45'	EL	22.0	0.510	2.44	45'	EL	42.3	0.80	0.281	1.68	45'	EL	22.0	
		TNT6A	41.600	--	1.63	67.80	1.4	0.281	1.75	45'	EL	22.0	0.510	2.74	45'	EL	42.3	0.80	0.281	1.63	45'	EL	22.0	
		TNT7A	42.000	--	1.57	65.94	1.4	0.281	1.70	45'	EL	22.0	0.510	2.53	45'	EL	42.3	0.80	0.281	1.57	45'	EL	22.0	
		TNT7B	42.000	--	1.74	73.08	1.4	0.281	1.87	45'	EL	22.0	0.510	2.34	45'	EL	42.3	0.80	0.281	1.74	45'	EL	22.0	
		TNAGRIT4	43.000	--	1.42	61.06	1.4	0.281	1.54	45'	EL	22.0	0.510	1.98	45'	EL	42.3	0.80	0.281	1.42	45'	EL	22.0	
		TNAGT5A	45.000	--	1.32	59.40	1.4	0.281	1.43	45'	EL	22.0	0.510	2.03	45'	EL	42.3	0.80	0.281	1.32	45'	EL	22.0	
		TNAGT5B	45.000	3	1.29	58.05	1.4	0.281	1.39	45'	EL	22.0	0.510	1.80	45'	EL	31.0	0.80	0.281	1.29	45'	EL	22.0	

LOAD FACTORS:

	LIMIT STATE	γ_{DC}	γ_{DW}
DESIGN LOAD RATING FACTORS	STRENGTH I	1.25	1.50
	SERVICE III	1.00	1.00

NOTES:

MINIMUM RATING FACTORS ARE BASED ON THE STRENGTH I AND SERVICE III LIMIT STATES.

ALLOWABLE STRESSES FOR SERVICE III LIMIT STATE ARE AS REQUIRED FOR DESIGN.

(#) CONTROLLING LOAD RATING

(1) DESIGN LOAD RATING (HL-93)

(2) DESIGN LOAD RATING (HS-20)

(3) LEGAL LOAD RATING **

** SEE CHART FOR VEHICLE TYPE

GIRDER LOCATION

I - INTERIOR GIRDER
EL - EXTERIOR LEFT GIRDER
ER - EXTERIOR RIGHT GIRDER

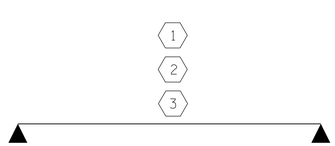

LRFR SUMMARY

FOR SPAN 'B'

DocuSigned by: Jeff Loftus FE51DC02E6794A9... 1/21/2016

NORTH CAROLINA PROFESSIONAL SEAL 041425 ENGINEER JEFFREY M. LOFTUS

DOCUMENT NOT CONSIDERED FINAL UNLESS ALL SIGNATURES COMPLETED

Firm License No. C-1051
421 Fayetteville St,
Suite 480
Raleigh, NC 27601
T 919.380.8750
www.stewartinc.com

STEWART

PROJECT NO. 17BP.5.R.58

FRANKLIN COUNTY

STATION: 14+62.50 -L-

SHEET 4 OF 4

STATE OF NORTH CAROLINA
DEPARTMENT OF TRANSPORTATION
RALEIGH

STANDARD
LRFR SUMMARY FOR
45' CORED SLAB UNIT
90° SKEW
(NON-INTERSTATE TRAFFIC)

REVISIONS						SHEET NO.
NO.	BY:	DATE:	NO.	BY:	DATE:	S-4
1			3			TOTAL SHEETS
2			4			19

DRAWN BY: H.ASSFOURA DATE: 03/15
CHECKED BY: J.LOFTUS DATE: 06/15
DESIGN ENGINEER OF RECORD: J.LOFTUS DATE: 06/15

12/17/2015
...\400_004_17BP5R58_SMU_LRFR04.dgn
USER:jloftus

DocuSign Envelope ID: E4E7C76D-30D2-4EF6-88EA-F70D5C11C909

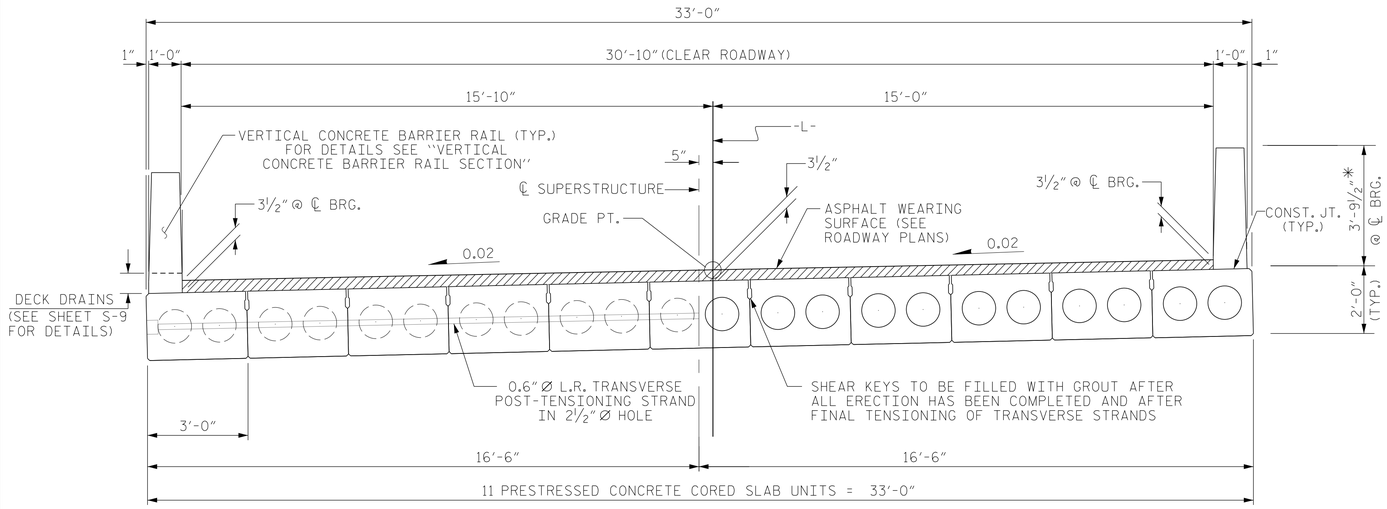

HALF SECTION
AT INTERMEDIATE DIAPHRAGMS

TYPICAL SECTION

HALF SECTION
THROUGH VOIDS

* - THE MAXIMUM BARRIER RAIL HEIGHT AND ASPHALT THICKNESS IS SHOWN. THE HEIGHT OF THE BARRIER RAIL AND ASPHALT THICKNESS VARIES WHILE THE TOP OF THE BARRIER RAIL FOLLOWS THE PROFILE OF THE GUTTERLINE. FOR RAIL HEIGHT DETAILS AND ASPHALT THICKNESS, SEE THE "VERTICAL CONCRETE BARRIER RAIL SECTION" DETAIL.

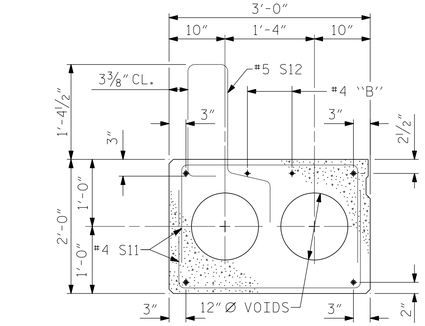

EXTERIOR SLAB SECTION

(FOR PRESTRESSED STRAND LAYOUT, SEE INTERIOR SLAB SECTION.)

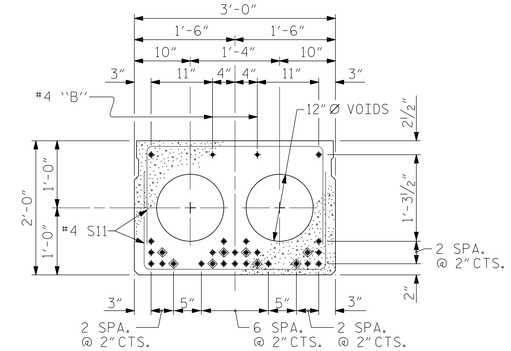

INTERIOR SLAB SECTION (SPAN A)

(28 STRANDS REQUIRED)

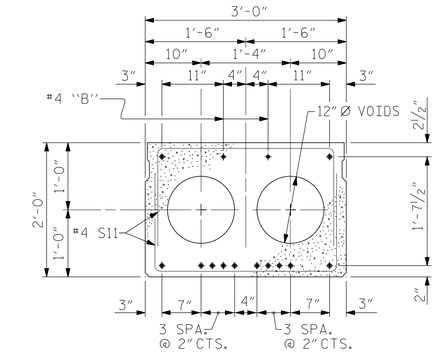

INTERIOR SLAB SECTION (SPAN B)

(12 STRANDS REQUIRED)

0.6" Ø LOW RELAXATION STRAND LAYOUT

◈ BOND SHALL BE BROKEN ON THESE STRANDS FOR A DISTANCE OF 12'-0" FROM END OF CORED SLAB UNIT. SEE STANDARD SPECIFICATIONS, ARTICLE 1078-7.

DEBONDING LEGEND

FIXED END

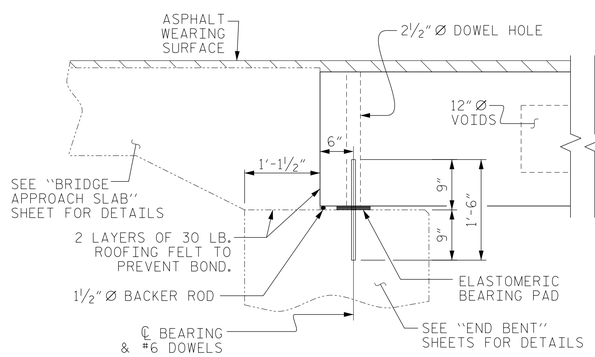

SECTION AT END BENT

FIXED END FIXED END

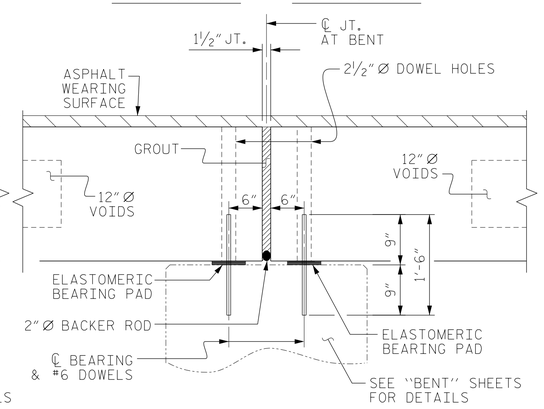

SECTION AT BENT

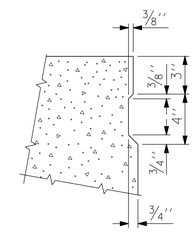

SHEAR KEY DETAIL

NOTE: OMIT SHEAR KEY ON OUTSIDE FACE OF EXTERIOR CORED SLABS.

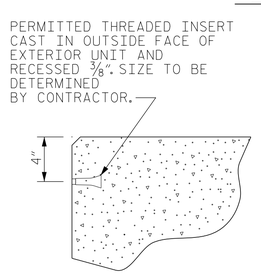

THREADED INSERT DETAIL

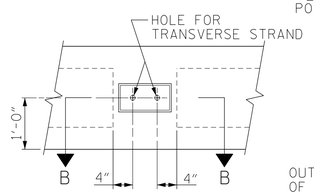

ELEVATION VIEW

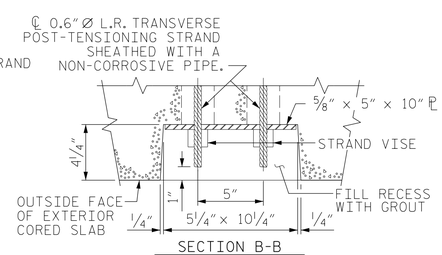

SECTION B-B

GROUTED RECESS AT END OF POST-TENSIONED STRAND • CORED SLABS

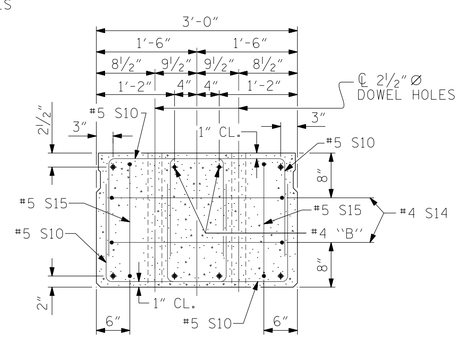

END ELEVATION

SHOWING PLACEMENT OF DOUBLE STIRRUPS AND LOCATION OF DOWEL HOLES. (STRAND LAYOUT NOT SHOWN.) INTERIOR SLAB UNIT SHOWN-EXTERIOR SLAB UNIT SIMILAR EXCEPT SHEAR KEY LOCATION.

DocuSigned by: Jeff Loftus FE51DC02E6794A9 1/21/2016

NORTH CAROLINA PROFESSIONAL SEAL 041425 ENGINEER JEFFREY M. LOFTUS

DOCUMENT NOT CONSIDERED FINAL UNLESS ALL SIGNATURES COMPLETED

STEWART

Firm License No. C-1051
421 Fayetteville St,
Suite 400
Raleigh, NC 27601
T 919.380.8750
www.stewartinc.com

PROJECT NO. 17BP.5.R.58
FRANKLIN COUNTY
STATION: 14+62.50 -L-

STATE OF NORTH CAROLINA
DEPARTMENT OF TRANSPORTATION
RALEIGH
STANDARD

TYPICAL SECTION

REVISIONS								SHEET NO.
NO.	BY:	DATE:	NO.	BY:	DATE:			S-5
1			3					TOTAL SHEETS
2			4					19

DRAWN BY: H.ASSFOURA DATE: 03/15
CHECKED BY: J.LOFTUS DATE: 06/15
DESIGN ENGINEER OF RECORD: J.LOFTUS DATE: 06/15

12/17/2015
...\400_005_17BP5R58_SMU_TS01.dgn
USER:jloftus

DocuSign Envelope ID: E4E7C76D-30D2-4EF6-88EA-F70D5C11C909

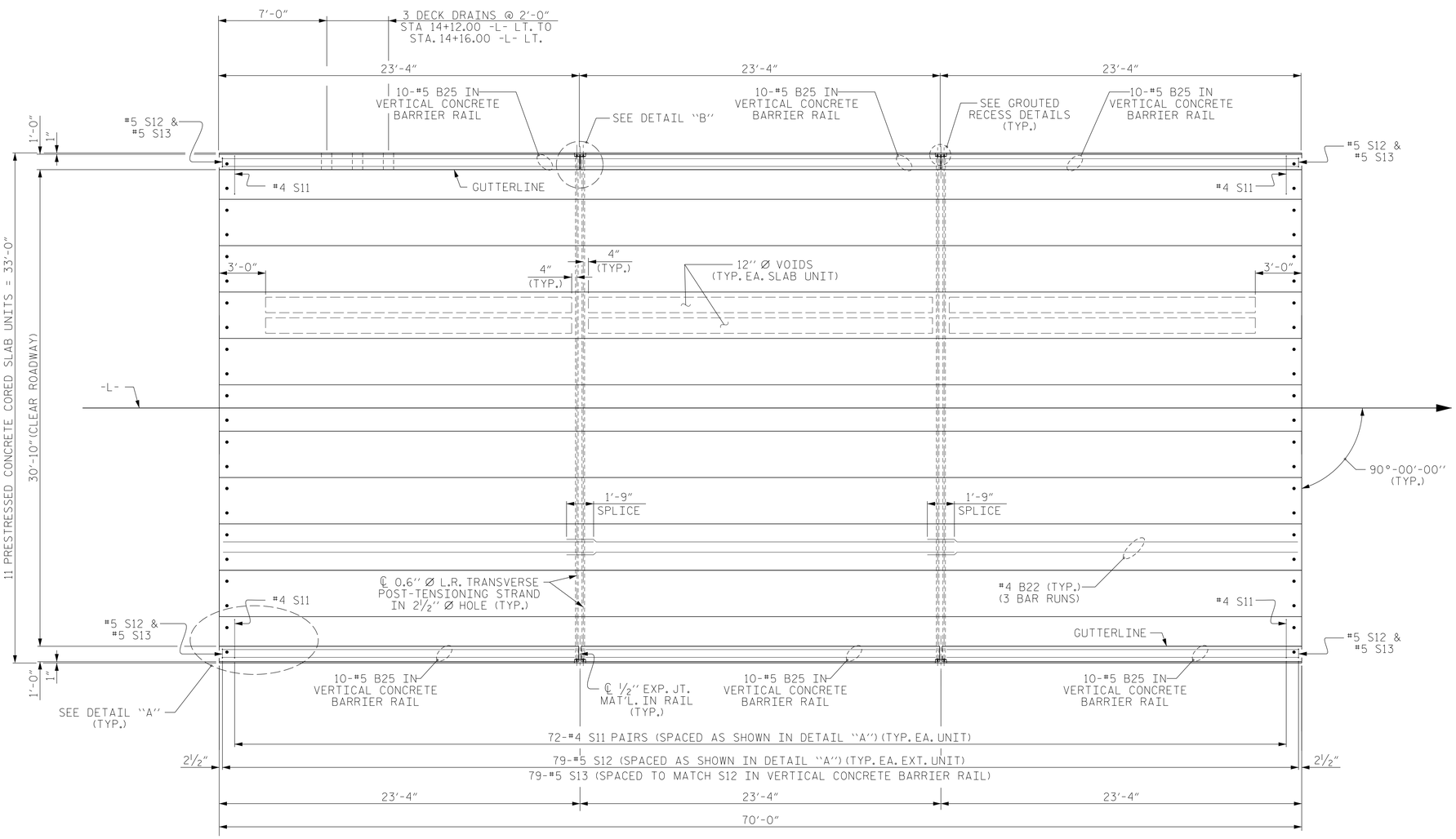

PLAN OF UNIT

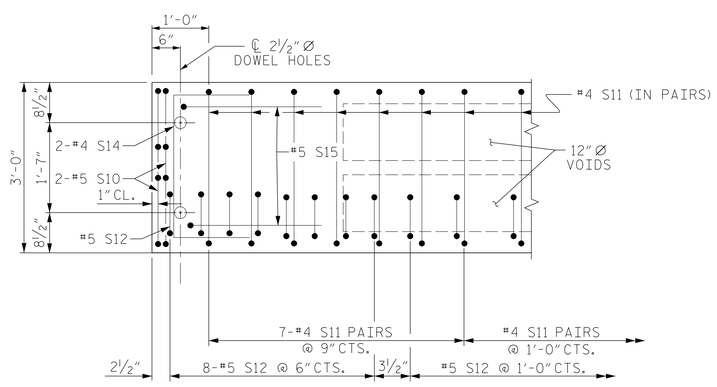

DETAIL "A"

(TYPICAL EACH END OF UNIT)
NOTE: EXTERIOR UNIT SHOWN - INTERIOR UNIT SIMILAR EXCEPT OMIT #5 S12 BARS.

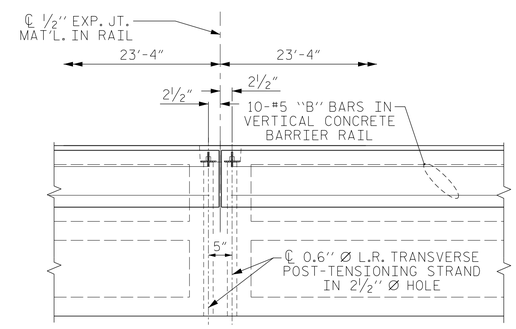

DETAIL "B"

#4 S11 BARS MAY BE SHIFTED AS NECESSARY TO MAINTAIN 1" CLEAR TO GROUTED RECESS AND 2½" Ø TRANSVERSE POST-TENSIONING STRAND HOLES

DocuSigned by: Jeff Loftus FE51DC02E6704A9 1/21/2016

NORTH CAROLINA PROFESSIONAL SEAL 041425 ENGINEER JEFFREY M. LOFTUS

DOCUMENT NOT CONSIDERED FINAL UNLESS ALL SIGNATURES COMPLETED

STEWART

Firm License No. C-1051
421 Fayetteville St,
Suite 400
Raleigh, NC 27601
T 919.380.8750
www.stewartinc.com

PROJECT NO. 17BP.5.R.58
FRANKLIN COUNTY
STATION: 14+62.50 -L-

SHEET 1 OF 3

STATE OF NORTH CAROLINA
DEPARTMENT OF TRANSPORTATION
RALEIGH

PLAN OF 70' UNIT 30'-10" CLEAR ROADWAY 90° SKEW

REVISIONS						SHEET NO.
NO.	BY:	DATE:	NO.	BY:	DATE:	S-6
1			3			TOTAL SHEETS
2			4			19

ASSEMBLED BY :	H.ASSFOURA	DATE :	03/15
CHECKED BY :	J.LOFTUS	DATE :	11/15
DRAWN BY : MAA	6/10	REV. 12/5/11	MAA/AAC
CHECKED BY : MKT	7/10	REV. 8/14	MAA/TMG

12/17/2015
...\400_006_17BP5R58_SMU_SP01.dgn
USER: jloftus

DocuSign Envelope ID: E4E7C76D-30D2-4EF6-88EA-F70D5C11C909

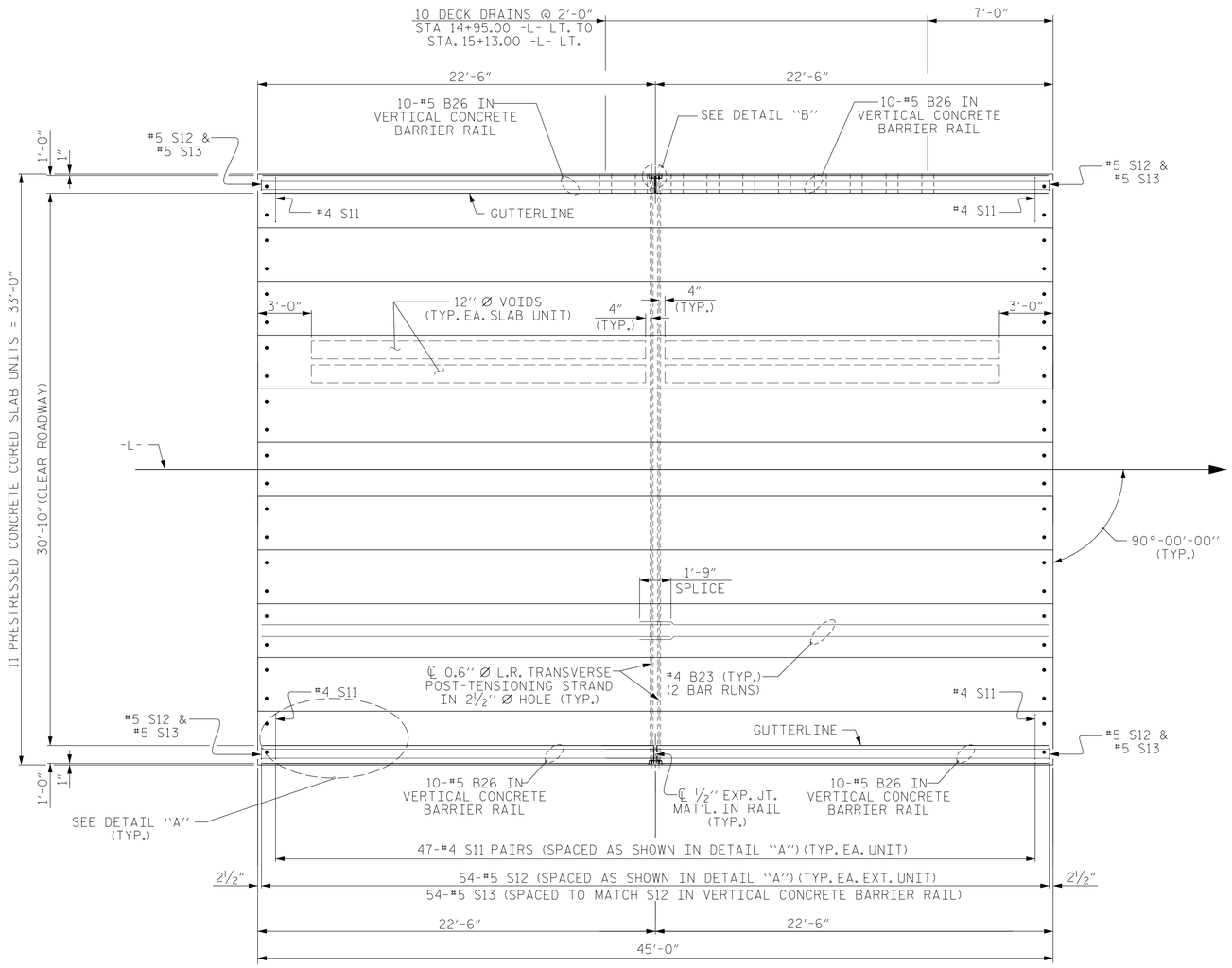

PLAN OF UNIT

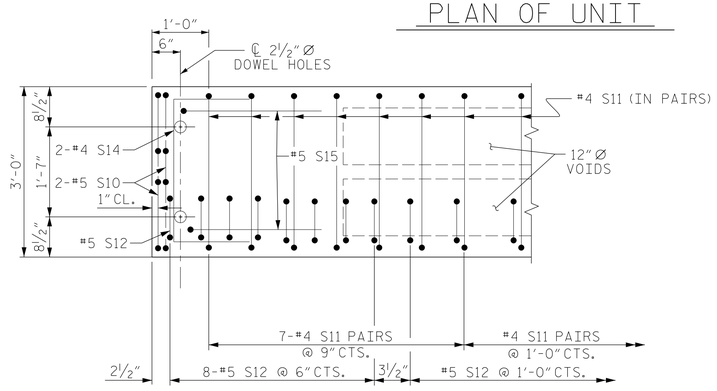

DETAIL "A"

(TYPICAL EACH END OF UNIT)
NOTE: EXTERIOR UNIT SHOWN - INTERIOR UNIT SIMILAR EXCEPT OMIT #5 S12 BARS.

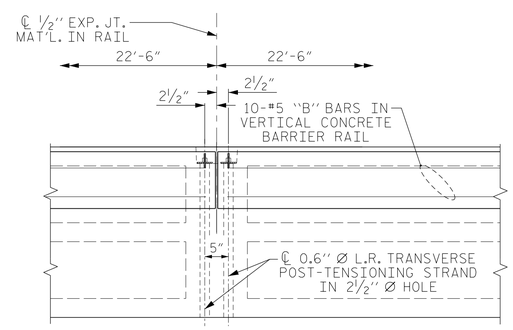

DETAIL "B"

#4 S11 BARS MAY BE SHIFTED AS NECESSARY TO MAINTAIN 1" CLEAR TO GROUTED RECESS AND 2½" Ø TRANSVERSE POST-TENSIONING STRAND HOLES

PROJECT NO. 17BP.5.R.58
FRANKLIN COUNTY
STATION: 14+62.50 -L-

SHEET 2 OF 3

DocuSigned by: Jeff Loftus FE51DC02E6704A9... 1/21/2016

NORTH CAROLINA PROFESSIONAL SEAL 041425 ENGINEER JEFFREY M. LOFTUS

DOCUMENT NOT CONSIDERED FINAL UNLESS ALL SIGNATURES COMPLETED

STEWART

Firm License No. C-1051
421 Fayetteville St,
Suite 400
Raleigh, NC 27601
T 919.380.8750
www.stewartinc.com

STATE OF NORTH CAROLINA
DEPARTMENT OF TRANSPORTATION
RALEIGH

PLAN OF 45' UNIT
30'-10" CLEAR ROADWAY
90° SKEW

REVISIONS						SHEET NO.
NO.	BY:	DATE:	NO.	BY:	DATE:	S-7
1			3			TOTAL SHEETS
2			4			19

DRAWN BY: H.ASSFOURA DATE: 03/15
CHECKED BY: J.LOFTUS DATE: 06/15
DESIGN ENGINEER OF RECORD: J.LOFTUS DATE: 06/15

12/17/2015
...\400_007_17BP5R58_SMU_SP02.dgn
USER:jloftus

DocuSign Envelope ID: E4E7C76D-30D2-4EF6-88EA-F70D5C11C909

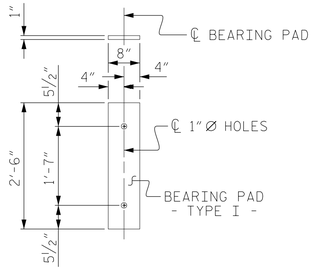

FIXED END
(TYPE I - 44 REQ'D)

ELASTOMERIC BEARING DETAILS

ELASTOMER IN ALL BEARINGS SHALL BE 60 DUROMETER HARDNESS.

GRADE 270 STRANDS	
	0.6"Ø L.R.
AREA (SQUARE INCHES)	0.217
ULTIMATE STRENGTH (LBS. PER STRAND)	58,600
APPLIED PRESTRESS (LBS. PER STRAND)	43,950

CONCRETE RELEASE STRENGTH	
UNIT	PSI
70' UNITS	5500
45' UNITS	4000

BILL OF MATERIAL FOR ONE 70' CORED SLAB UNIT

				EXTERIOR UNIT		INTERIOR UNIT	
BAR	NUMBER	SIZE	TYPE	LENGTH	WEIGHT	LENGTH	WEIGHT
B22	6	#4	STR	24'-6"	98	24'-6"	98
S10	8	#5	3	4'-9"	40	4'-9"	40
S11	144	#4	3	5'-10"	561	5'-10"	561
✱S12	79	#5	1	5'-7"	460		
S14	4	#4	3	5'-7"	15	5'-7"	15
S15	4	#5	3	7'-1"	30	7'-1"	30
REINFORCING STEEL			LBS.		744		744
✱EPOXY COATED REINFORCING STEEL			LBS.		460		
7000 P.S.I. CONCRETE			CU. YDS.		11.8		11.8
0.6"Ø L.R. STRANDS			No.		28		28

BILL OF MATERIAL FOR ONE 45' CORED SLAB UNIT

				EXTERIOR UNIT		INTERIOR UNIT	
BAR	NUMBER	SIZE	TYPE	LENGTH	WEIGHT	LENGTH	WEIGHT
B23	4	#4	STR	23'-3"	62	23'-3"	62
S10	8	#5	3	4'-9"	40	4'-9"	40
S11	94	#4	3	5'-10"	366	5'-10"	366
✱S12	54	#5	1	5'-7"	314		
S14	4	#4	3	5'-7"	15	5'-7"	15
S15	4	#5	3	7'-1"	30	7'-1"	30
REINFORCING STEEL			LBS.		513		513
✱EPOXY COATED REINFORCING STEEL			LBS.		314		
5000 P.S.I. CONCRETE			CU. YDS.		7.6		7.6
0.6"Ø L.R. STRANDS			No.		12		12

DEAD LOAD DEFLECTION AND CAMBER	
	3'-0" x 2'-0"
70' CORED SLAB UNIT	0.6"Ø L.R. STRAND
CAMBER (SLAB ALONE IN PLACE)	2¼" ↑
DEFLECTION DUE TO SUPERIMPOSED DEAD LOAD✱✱	¾" ↓
FINAL CAMBER	1½" ↑

✱✱ INCLUDES FUTURE WEARING SURFACE

DEAD LOAD DEFLECTION AND CAMBER	
	3'-0" x 2'-0"
45' CORED SLAB UNIT	0.6"Ø L.R. STRAND
CAMBER (SLAB ALONE IN PLACE)	⅜" ↑
DEFLECTION DUE TO SUPERIMPOSED DEAD LOAD✱✱	3/16" ↓
FINAL CAMBER	3/16" ↑

✱✱ INCLUDES FUTURE WEARING SURFACE

BAR TYPES

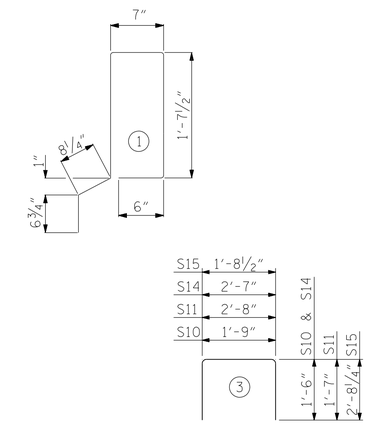

ALL BAR DIMENSIONS ARE OUT TO OUT

CORED SLABS REQUIRED			
	NUMBER	LENGTH	TOTAL LENGTH
70' UNIT			
EXTERIOR C.S.	2	70'-0"	140'-0"
INTERIOR C.S.	9	70'-0"	630'-0"
TOTAL	11		770'-0"
45' UNIT			
EXTERIOR C.S.	2	45'-0"	90'-0"
INTERIOR C.S.	9	45'-0"	405'-0"
TOTAL	11		495'-0"

NOTES

ALL PRESTRESSING STRANDS SHALL BE 7-WIRE LOW RELAXATION GRADE 270 STRANDS AND SHALL CONFORM TO AASHTO M203 EXCEPT FOR SAMPLING REQUIREMENTS WHICH SHALL BE IN ACCORDANCE WITH THE STANDARD SPECIFICATIONS.

ALL REINFORCING STEEL CAST WITH THE CORED SLAB SECTIONS SHALL BE GRADE 60 AND SHALL BE INCLUDED IN THE UNIT PRICE BID FOR PRESTRESSED CONCRETE CORED SLABS.

RECESSES FOR TRANSVERSE STRANDS SHALL BE GROUTED AFTER THE TENSIONING OF THE STRANDS.

THE 2½"Ø DOWEL HOLES AT FIXED ENDS OF SLAB SECTIONS SHALL BE FILLED WITH NON-SHRINK GROUT.

THE BACKER RODS SHALL CONFORM TO THE REQUIREMENTS OF TYPE M BOND BREAKER. SEE SECTION 1028 OF THE STANDARD SPECIFICATIONS.

WHEN CORED SLABS ARE CAST, AN INTERNAL HOLD-DOWN SYSTEM SHALL BE EMPLOYED TO PREVENT VOIDS FROM RISING OR MOVING SIDEWAYS. AT LEAST SIX WEEKS PRIOR TO CASTING CORED SLABS, THE CONTRACTOR SHALL SUBMIT TO THE ENGINEER FOR REVIEW AND COMMENT, DETAILED DRAWINGS OF THE PROPOSED HOLD-DOWN SYSTEM. IN ADDITION TO STRUCTURAL DETAILS, LOCATION AND SPACING OF THE HOLD-DOWNS SHALL BE INDICATED.

THE TRANSFER OF LOAD FROM THE ANCHORAGES TO THE CORED SLAB UNIT SHALL BE DONE WHEN THE CONCRETE HAS REACHED A COMPRESSIVE STRENGTH OF NOT LESS THAN THE REQUIRED STRENGTH SHOWN IN THE "CONCRETE RELEASE STRENGTH" TABLE.

ALL REINFORCING STEEL IN VERTICAL CONCRETE BARRIER RAILS SHALL BE EPOXY COATED.

PRESTRESSING STRANDS SHALL BE CUT FLUSH WITH THE CORED SLAB UNIT ENDS.

APPLY EPOXY PROTECTIVE COATING TO CORED SLAB UNIT ENDS.

GROOVED CONTRACTION JOINTS, ½" IN DEPTH, SHALL BE TOOLED IN ALL EXPOSED FACES OF THE BARRIER RAIL AND IN ACCORDANCE WITH ARTICLE 825-10(B) OF THE STANDARD SPECIFICATIONS. A CONTRACTION JOINT SHALL BE LOCATED AT EACH THIRD POINT BETWEEN BARRIER RAIL EXPANSION JOINTS. ONLY ONE CONTRACTION JOINT IS REQUIRED AT MIDPOINT OF BARRIER RAIL SEGMENTS LESS THAN 20 FEET IN LENGTH AND NO CONTRACTION JOINTS ARE REQUIRED FOR THOSE SEGMENTS LESS THAN 10 FEET IN LENGTH.

FLAME CUTTING OF THE TRANSVERSE POST-TENSIONING STRAND IS NOT ALLOWED.

MAINTAIN A SYMMETRIC TENSION FORCE BETWEEN EACH PAIR OF TRANSVERSE POST TENSIONING STRANDS IN THE DIAPHRAGM.

THE #4 S11 STIRRUPS MAY BE SHIFTED AS NECESSARY TO MAINTAIN 1" CLEAR TO THE GROUTED RECESS.

FOR GROUT FOR STRUCTURES, SEE SPECIAL PROVISIONS.

THE PERMITTED THREADED INSERTS ARE DETAILED AS AN OPTION FOR THE CONTRACTOR TO ATTACH FALSEWORK AND FORMWORK DURING CONSTRUCTION.

THE PERMITTED THREADED INSERTS IN THE EXTERIOR UNITS SHALL BE SIZED BY THE CONTRACTOR, SPACED AT 4'-0" CENTERS AND GALVANIZED IN ACCORDANCE WITH SECTION 1076 OF THE STANDARD SPECIFICATIONS. STAINLESS STEEL THREADED INSERTS MAY BE USED AS AN ALTERNATE.

THE PERMITTED THREADED INSERTS SHALL BE GROUTED BY THE CONTRACTOR IMMEDIATELY FOLLOWING REMOVAL OF THE FALSEWORK.

THE COST OF THE PERMITTED THREADED INSERTS SHALL BE INCLUDED IN THE PRICE BID FOR THE PRECAST UNITS.

APPLY EPOXY PROTECTIVE COATING TO EXTERIOR FACE OF THE EXTERIOR CORED SLAB UNITS THAT REQUIRED DRAINS IN THE BARRIER RAIL.

THE DRAIN OPENING AT THE GUTTERLINE SHALL BE 4"X8". THE HEIGHT OF THE BLOCK OUT IN THE VERTICAL CONCRETE BARRIER RAIL SHALL EXTEND FROM THE TOP OF THE CORED SLAB UNIT TO THE TOP OF THE DRAIN OPENING.

PROJECT NO. 17BP.5.R.58
FRANKLIN COUNTY
STATION: 14+62.50 -L-

SHEET 3 OF 3

DocuSigned by: Jeff Loftus FE51DC02E8704A8... 1/21/2016

NORTH CAROLINA PROFESSIONAL SEAL 041425 ENGINEER JEFFREY M. LOFTUS

DOCUMENT NOT CONSIDERED FINAL UNLESS ALL SIGNATURES COMPLETED

STEWART
Firm License No. C-1051
421 Fayetteville St,
Suite 400
Raleigh, NC 27601
T 919.380.8750
www.stewartinc.com

STATE OF NORTH CAROLINA
DEPARTMENT OF TRANSPORTATION
RALEIGH

STANDARD
3'-0" X 2'-0"
PRESTRESSED CONCRETE
CORED SLAB UNIT

REVISIONS						SHEET NO.
NO.	BY:	DATE:	NO.	BY:	DATE:	S-8
1			3			TOTAL SHEETS
2			4			19

DRAWN BY: H.ASSFOURA DATE: 03/15
CHECKED BY: J.LOFTUS DATE: 06/15
DESIGN ENGINEER OF RECORD: J.LOFTUS DATE: 06/15

1/7/2016
...\400_008_17BP5R58_SMU_SP03.dgn
USER:jloftus

DocuSign Envelope ID: E4E7C76D-30D2-4EF6-88EA-F70D5C11C909

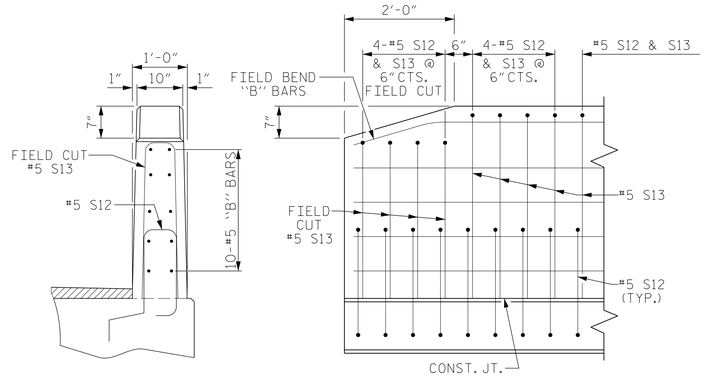

END VIEW

SIDE VIEW

END OF RAIL DETAILS

BILL OF MATERIAL FOR VERTICAL CONCRETE BARRIER RAIL						
BAR	BARS PER PAIR OF EXTERIOR UNITS	TOTAL NO.	SIZE	TYPE	LENGTH	WEIGHT
	70' UNIT					
*B25	60	60	#5	STR	22'-11"	1434
*S13	158	158	#5	2	7'-2"	1181
* EPOXY COATED REINFORCING STEEL				LBS.		2615
CLASS AA CONCRETE				CU.YDS.		18.1
TOTAL VERTICAL CONCRETE BARRIER RAIL				LN. FT.		140.25

BILL OF MATERIAL FOR VERTICAL CONCRETE BARRIER RAIL						
BAR	BARS PER PAIR OF EXTERIOR UNITS	TOTAL NO.	SIZE	TYPE	LENGTH	WEIGHT
	45' UNIT					
*B26	40	40	#5	STR	22'-1"	921
*S13	108	108	#5	2	7'-2"	807
* EPOXY COATED REINFORCING STEEL				LBS.		1728
CLASS AA CONCRETE				CU.YDS.		11.5
TOTAL VERTICAL CONCRETE BARRIER RAIL				LN. FT.		90.25

BAR TYPES

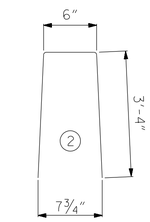

ALL BAR DIMENSIONS ARE OUT TO OUT

GUTTERLINE ASPHALT THICKNESS & RAIL HEIGHT		
	ASPHALT OVERLAY THICKNESS @ MID-SPAN	RAIL HEIGHT @ MID-SPAN
70' UNITS	2"	3'-8"
45' UNITS	3 5/16"	3'-9 5/16"

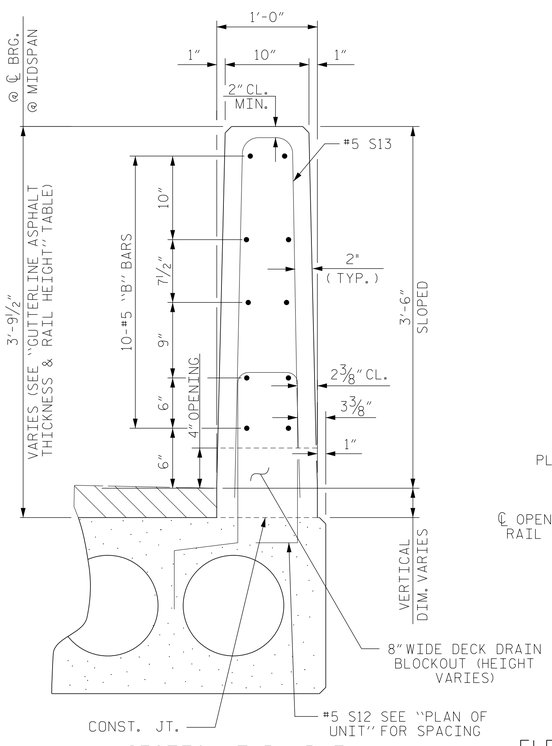

SECTION THRU RAIL

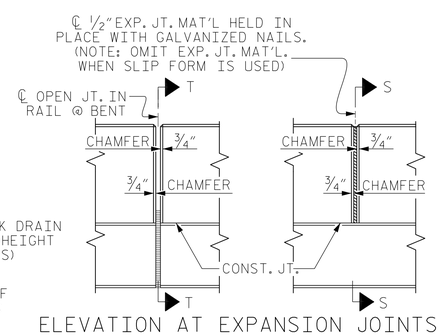

ELEVATION AT EXPANSION JOINTS

VERTICAL CONCRETE BARRIER RAIL DETAILS

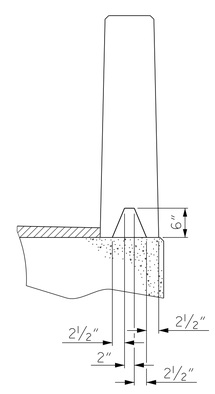

SECTION S-S

AT DAM IN OPEN JOINT
(THIS IS TO BE USED ONLY
WHEN SLIP FORM IS USED)

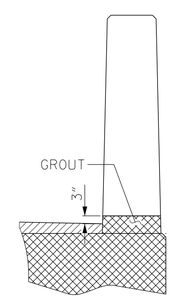

SECTION T-T

AT OPEN JOINT AT BENT
(THIS IS TO BE USED WHERE
FOAM JOINT IS NOT USED)

DocuSigned by: Jeff Loftus FE51DC02E8794A9 1/21/2016

NORTH CAROLINA PROFESSIONAL SEAL 041425 ENGINEER JEFFREY M. LOFTUS

DOCUMENT NOT CONSIDERED
FINAL UNLESS ALL
SIGNATURES COMPLETED

PROJECT NO. 17BP.5.R.58

FRANKLIN COUNTY

STATION: 14+62.50 -L-

STATE OF NORTH CAROLINA
DEPARTMENT OF TRANSPORTATION
RALEIGH

VERTICAL CONCRETE
BARRIER RAIL

STEWART

Firm License No. C-1051
421 Fayetteville St,
Suite 400
Raleigh, NC 27601
T 919.380.8750
www.stewartinc.com

REVISIONS						SHEET NO.
NO.	BY:	DATE:	NO.	BY:	DATE:	S-9
1			3			TOTAL SHEETS
2			4			19

DRAWN BY:	H.ASSFOURA	DATE :	03/15
CHECKED BY:	J.LOFTUS	DATE :	06/15
DESIGN ENGINEER OF RECORD:	J.LOFTUS	DATE :	06/15

1/7/2016
...\400_009_17BP5R58_SMU_BR01.dgn
USER:jloftus

DocuSign Envelope ID: E4E7C76D-30D2-4EF6-88EA-F70D5C11C909

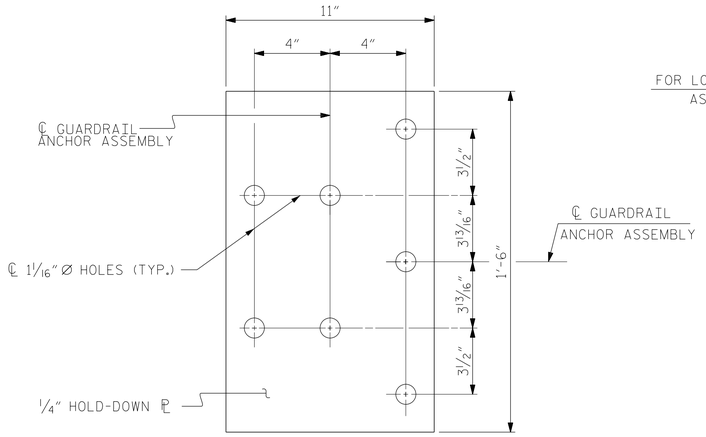

PLAN

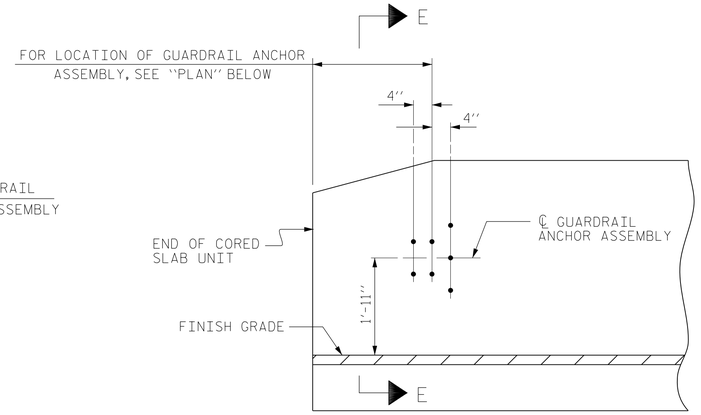

ELEVATION

NOTES

THE GUARDRAIL ANCHOR ASSEMBLY SHALL CONSIST OF A 1/4" HOLD DOWN PLATE AND 7 - 7/8" Ø BOLTS WITH NUTS AND WASHERS.

THE HOLD-DOWN PLATE SHALL CONFORM TO AASHTO M270 GRADE 36. AFTER FABRICATION, THE HOLD-DOWN PLATE SHALL BE HOT-DIP GALVANIZED IN ACCORDANCE WITH AASHTO M111.

BOLTS SHALL CONFORM TO THE REQUIREMENTS OF ASTM A307 AND NUTS SHALL CONFORM TO THE REQUIREMENTS OF AASHTO M291. BOLTS, NUTS AND WASHERS SHALL BE GALVANIZED. (AT THE CONTRACTOR'S OPTION, STAINLESS STEEL BOLTS, NUTS AND WASHERS MAY BE USED AS AN ALTERNATE FOR THE 7/8" Ø GALVANIZED BOLTS, NUTS AND WASHERS. THEY SHALL CONFORM TO OR EXCEED THE MECHANICAL REQUIREMENTS OF ASTM A307. THE USE OF THIS ALTERNATE SHALL BE APPROVED BY THE ENGINEER.)

THE GUARDRAIL ANCHOR ASSEMBLY IS REQUIRED AT ALL POINTS WHERE APPROACH GUARDRAIL IS TO BE ATTACHED TO THE END OF BARRIER RAIL. FOR POINTS OF ATTACHMENT, SEE SKETCH.

AFTER INSTALLATION, THE EXPOSED THREAD OF THE BOLT SHALL BE BURRED WITH A SHARP POINTED TOOL.

THE COST OF THE GUARDRAIL ANCHOR ASSEMBLY SHALL BE INCLUDED IN THE UNIT CONTRACT PRICE BID FOR VERTICAL CONCRETE BARRIER RAIL.

THE VERTICAL REINFORCING BARS MAY BE SHIFTED SLIGHTLY IN THE VERTICAL CONCRETE BARRIER RAIL TO CLEAR ASSEMBLY BOLTS.

THE 1 1/4" Ø HOLES SHALL BE FORMED OR DRILLED WITH A CORE BIT. IMPACT TOOLS WILL NOT BE PERMITTED. ANY CONCRETE DAMAGED BY THIS WORK SHALL BE REPAIRED TO THE SATISFACTION OF THE ENGINEER.

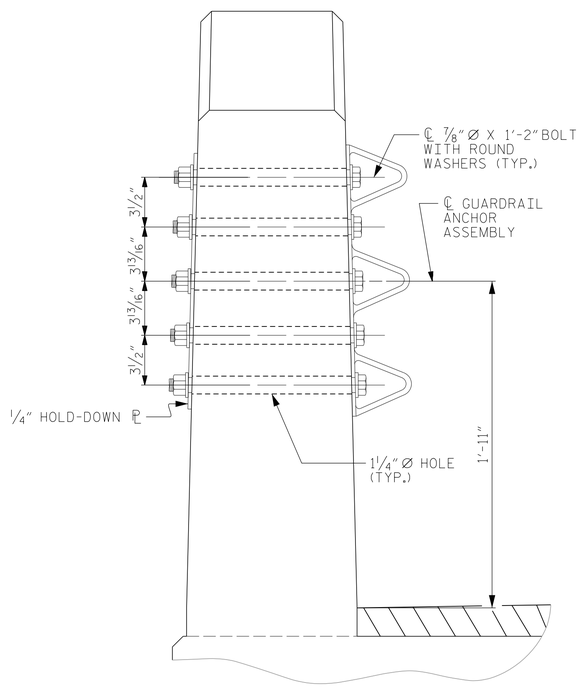

SECTION E-E

GUARDRAIL ANCHOR ASSEMBLY DETAILS

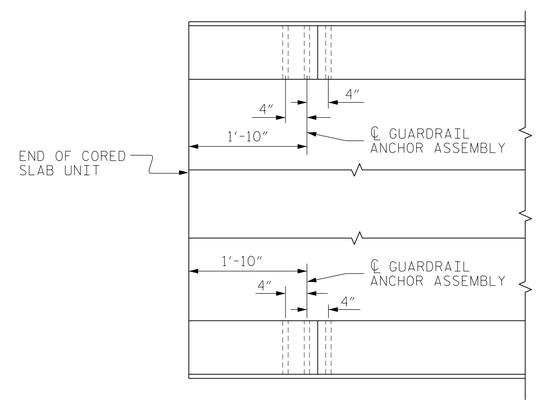

PLAN

LOCATION OF ANCHORS FOR GUARDRAIL

END BENT #1 SHOWN, END BENT #2 SIMILAR.

SKETCH SHOWING POINTS OF ATTACHMENT

✳ DENOTES GUARDRAIL ANCHOR ASSEMBLY

PROJECT NO. 17BP.5.R.58

FRANKLIN COUNTY

STATION: 14+62.50 -L-

DocuSigned by: Jeff Loftus FE51DC02E6704A9... 1/21/2016

NORTH CAROLINA PROFESSIONAL SEAL 041425 ENGINEER JEFFREY M. LOFTUS

DOCUMENT NOT CONSIDERED FINAL UNLESS ALL SIGNATURES COMPLETED

STEWART

Firm License No. C-1051
421 Fayetteville St,
Suite 400
Raleigh, NC 27601
T 919.380.8750
www.stewartinc.com

STATE OF NORTH CAROLINA
DEPARTMENT OF TRANSPORTATION
RALEIGH

STANDARD
GUARDRAIL ANCHORAGE FOR VERTICAL CONCRETE BARRIER RAIL

REVISIONS						SHEET NO.
NO.	BY:	DATE:	NO.	BY:	DATE:	S-10
1			3			TOTAL SHEETS
2			4			19

ASSEMBLED BY :	H.ASSFOURA	DATE :	03/15
CHECKED BY :	J.LOFTUS	DATE :	06/15
DRAWN BY :	MAA 5/10	REV. 10/1/11	MAA/GM
CHECKED BY :	GM 5/10	REV. 12/5/11	MAA/GM
		REV. 6/13	MAA/GM

12/17/2015
...\400_010_17BP5R58_SWU_GRA01.dgn
USER:jloftus

DocuSign Envelope ID: E4E7C76D-30D2-4EF6-88EA-F70D5C11C909

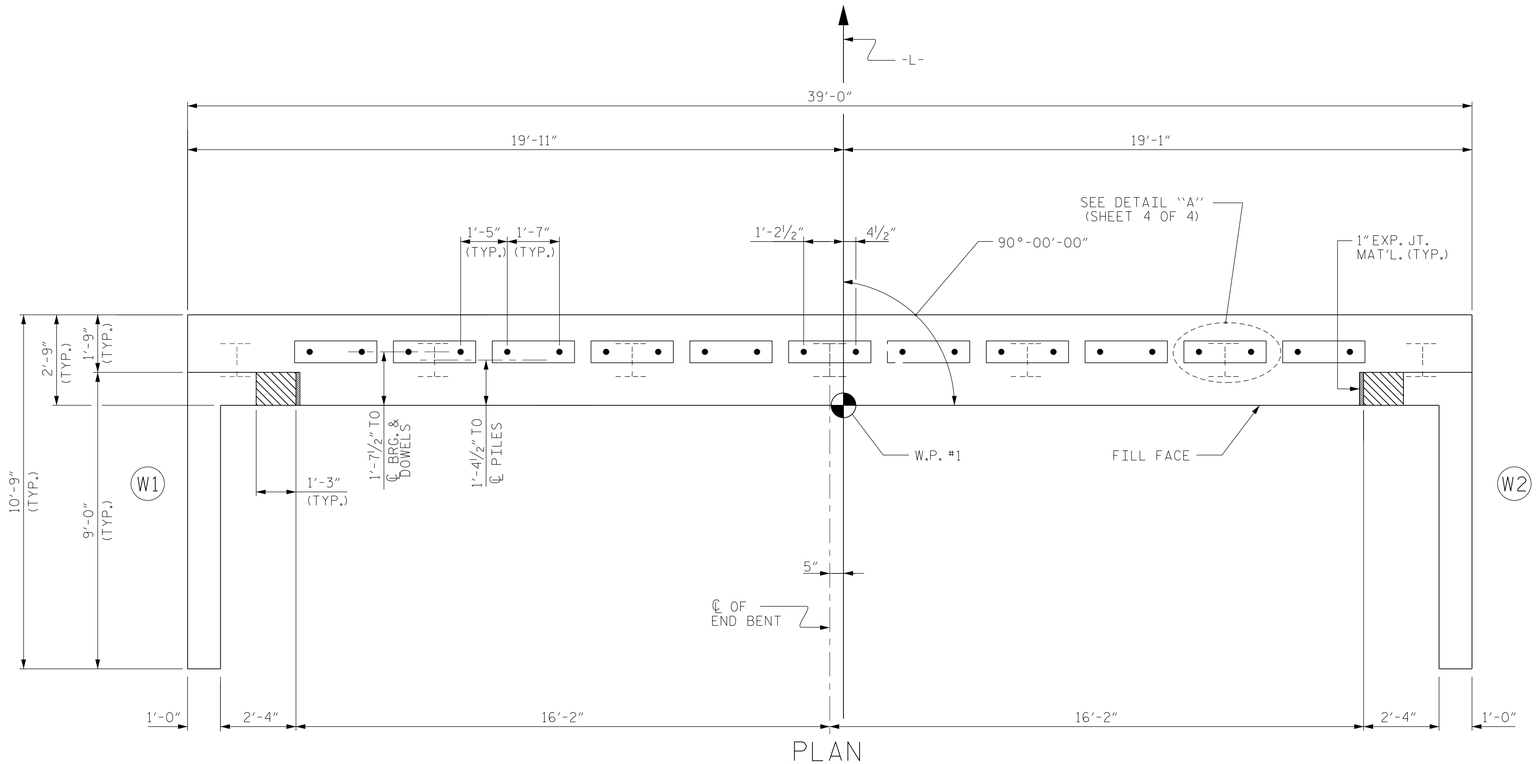

PLAN

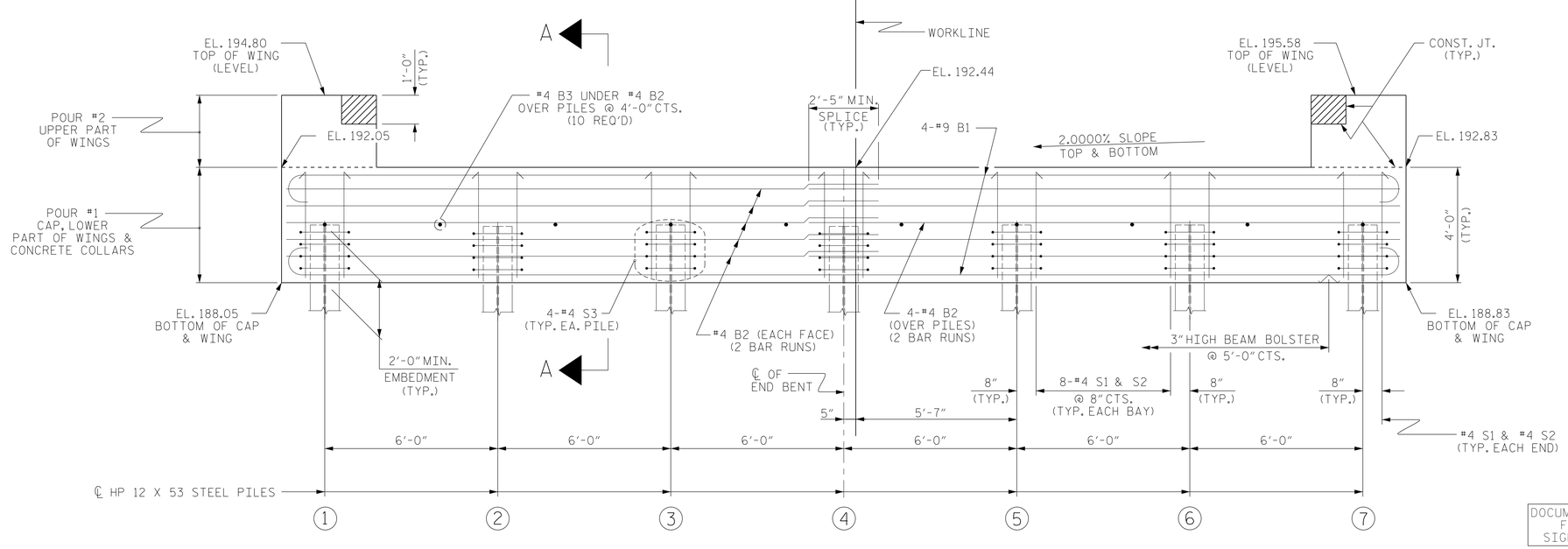

ELEVATION

WINGS NOT SHOWN FOR CLARITY.
FOR SECTION A-A, SEE SHEET 4 OF 4.
CONCRETE COLLARS FOR STEEL PILES NOT SHOWN IN PLAN AND ELEVATION VIEWS FOR CLARITY.
SEE "CORROSION PROTECTION FOR STEEL PILES DETAIL", SHEET 4 OF 4.

NOTES

STIRRUPS IN CAP MAY BE SHIFTED AS NECESSARY TO CLEAR DOWELS.

THE CONCRETE IN THE SHADED AREA OF THE WING SHALL BE POURED AFTER THE VERTICAL CONCRETE BARRIER RAIL IS CAST IF SLIP FORMING IS USED.

FOR PILE SPLICE DETAILS, SEE SHEET 4 OF 4.

FOR WING DETAILS, SEE SHEET 3 OF 4.

TOP OF PILE ELEVATIONS	
1	190.08
2	190.20
3	190.32
4	190.44
5	190.56
6	190.68
7	190.80

PROJECT NO. 17BP.5.R.58
FRANKLIN COUNTY
STATION: 14+62.50 -L-

SHEET 1 OF 4

DocuSigned by: Jeff LoFtus FE51DC02E6794A9 1/21/2016

NORTH CAROLINA PROFESSIONAL SEAL 041425 ENGINEER JEFFREY M. LOFTUS

DOCUMENT NOT CONSIDERED FINAL UNLESS ALL SIGNATURES COMPLETED

Firm License No. C-1051
421 Fayetteville St,
Suite 400
Raleigh, NC 27601
T 919.380.8750
www.stewartinc.com
STEWART

STATE OF NORTH CAROLINA
DEPARTMENT OF TRANSPORTATION
RALEIGH

SUBSTRUCTURE

END BENT No. 1

REVISIONS							SHEET NO.
NO.	BY:	DATE:	NO.	BY:	DATE:		S-11
1			3				TOTAL SHEETS
2			4				19

ASSEMBLED BY :	H.ASSFOURA	DATE :	03/15
CHECKED BY :	J.LOFTUS	DATE :	06/15
DRAWN BY :	WJH	12/11	
CHECKED BY :	AAC	12/11	

12/17/2015
...\400_011_17BP5R58_SMU_EB01.dgn
USER:jloftus

DocuSign Envelope ID: E4E7C76D-30D2-4EF6-88EA-F70D5C11C909

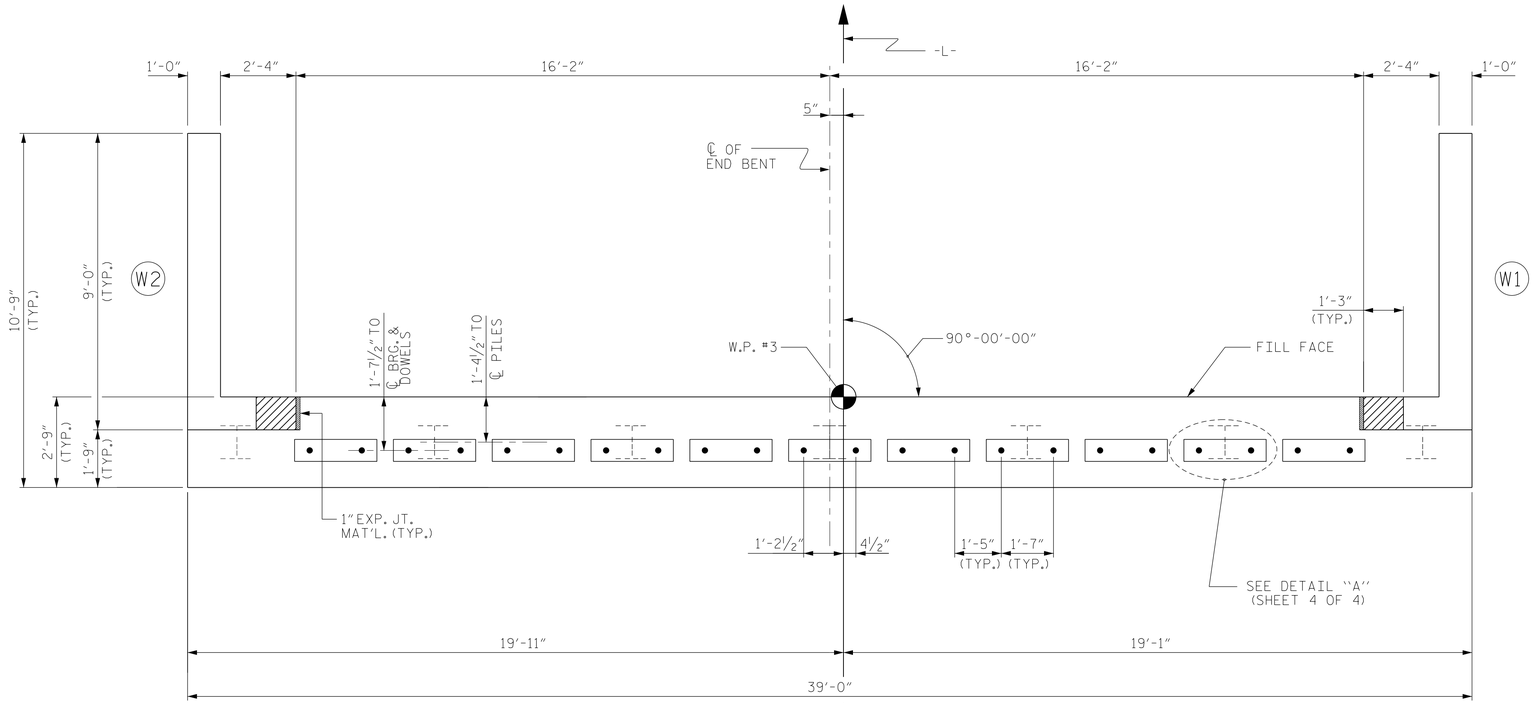

PLAN

NOTES

STIRRUPS IN CAP MAY BE SHIFTED AS NECESSARY TO CLEAR DOWELS.

THE CONCRETE IN THE SHADED AREA OF THE WING SHALL BE POURED AFTER THE VERTICAL CONCRETE BARRIER RAIL IS CAST IF SLIP FORMING IS USED.

FOR PILE SPLICE DETAILS, SEE SHEET 4 OF 4.

FOR WING DETAILS, SEE SHEET 3 OF 4.

TOP OF PILE ELEVATIONS	
1	189.73
2	189.85
3	189.97
4	190.09
5	190.21
6	190.33
7	190.45

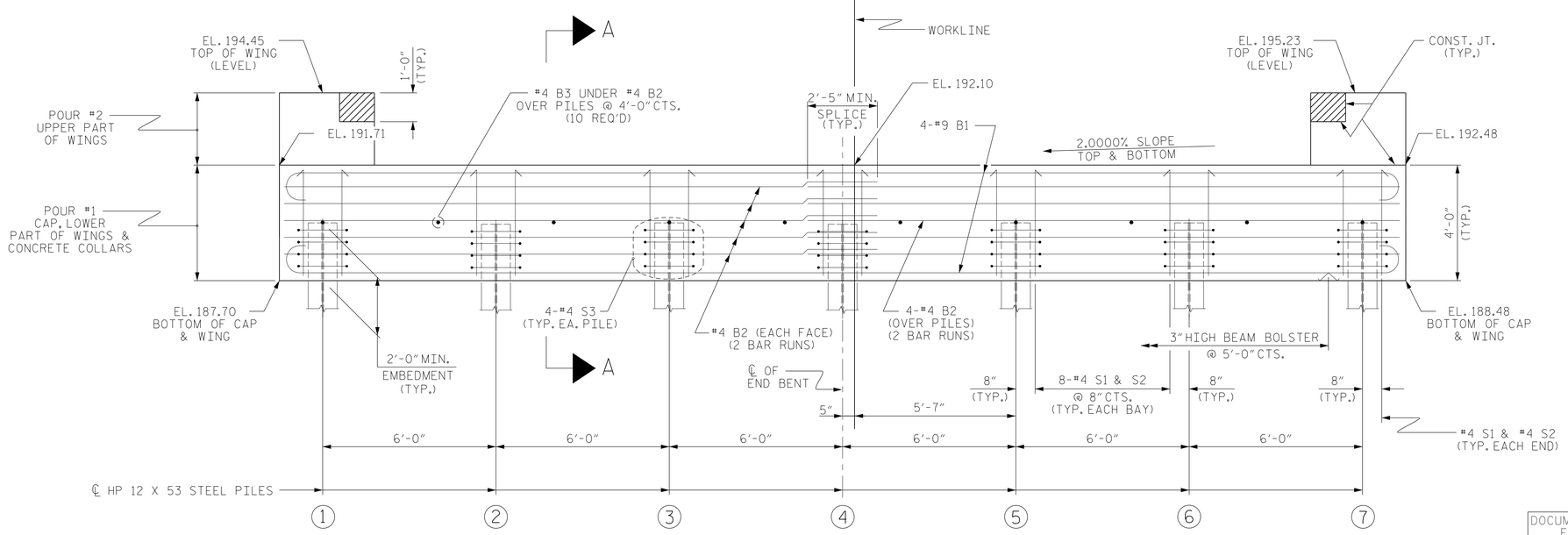

ELEVATION

WINGS NOT SHOWN FOR CLARITY.
FOR SECTION A-A, SEE SHEET 4 OF 4.
CONCRETE COLLARS FOR STEEL PILES NOT SHOWN IN PLAN AND ELEVATION VIEWS FOR CLARITY.
SEE "CORROSION PROTECTION FOR STEEL PILES DETAIL", SHEET 4 OF 4.

DocuSigned by: Jeff Loftus FE51DC02E8704A9 1/21/2016

NORTH CAROLINA PROFESSIONAL SEAL 041425 ENGINEER JEFFREY M. LOFTUS

DOCUMENT NOT CONSIDERED FINAL UNLESS ALL SIGNATURES COMPLETED

STEWART
Firm License No. C-1051
421 Fayetteville St,
Suite 400
Raleigh, NC 27601
T 919.380.8750
www.stewartinc.com

PROJECT NO. 17BP.5.R.58
FRANKLIN COUNTY
STATION: 14+62.50 -L-

SHEET 2 OF 4

STATE OF NORTH CAROLINA
DEPARTMENT OF TRANSPORTATION
RALEIGH

SUBSTRUCTURE

END BENT No. 2

REVISIONS								SHEET NO.
NO.	BY:	DATE:	NO.	BY:	DATE:			S-12
1			3					TOTAL SHEETS
2			4					19

ASSEMBLED BY :	H.ASSFOURA	DATE :	03/15
CHECKED BY :	J.LOFTUS	DATE :	06/15
DRAWN BY :	WJH	12/11	
CHECKED BY :	AAC	12/11	

12/17/2015
...\400_012_17BP5R58_SMU_EB02.dgn
USER:jloftus

DocuSign Envelope ID: E4E7C76D-30D2-4EF6-88EA-F70D5C11C909

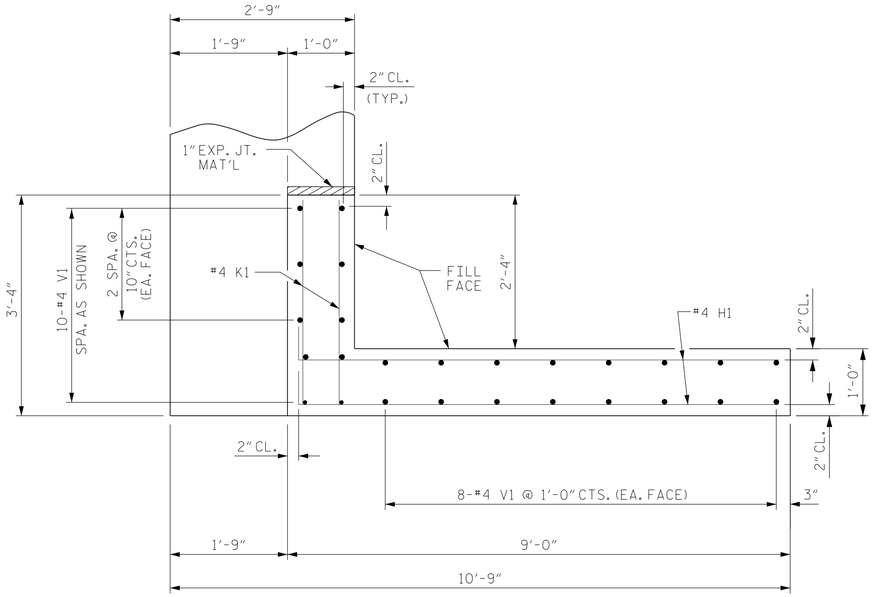

PLAN OF WING (W1)

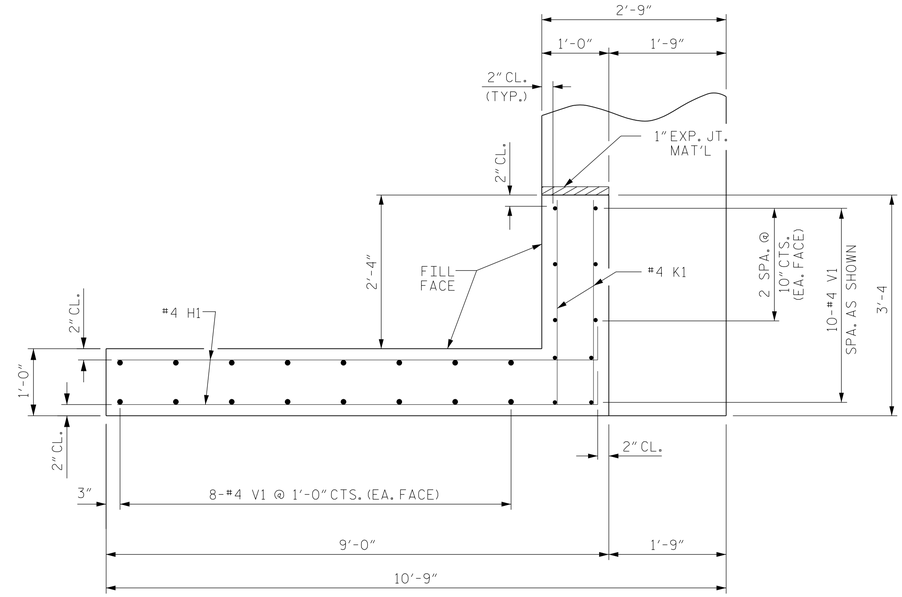

PLAN OF WING (W2)

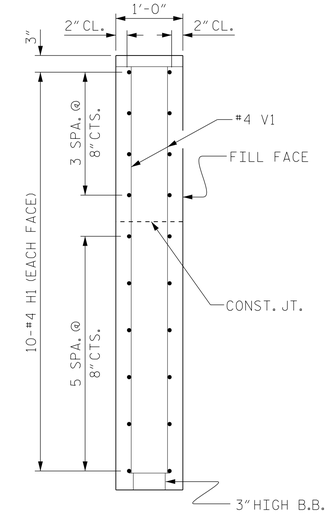

SECTION X-X

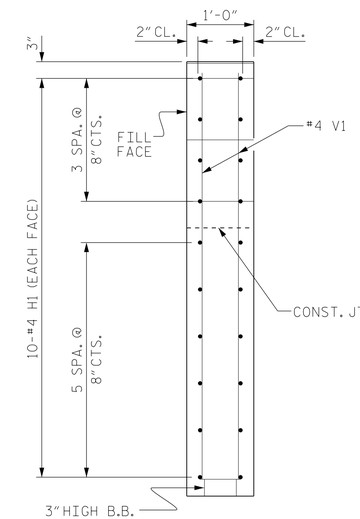

SECTION Y-Y

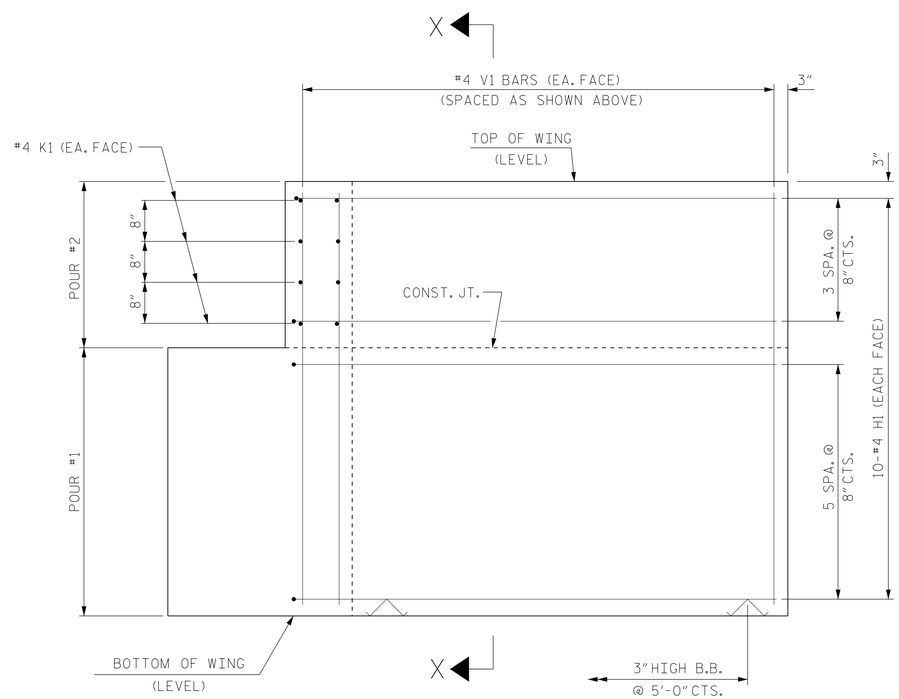

ELEVATION OF WING (W1)

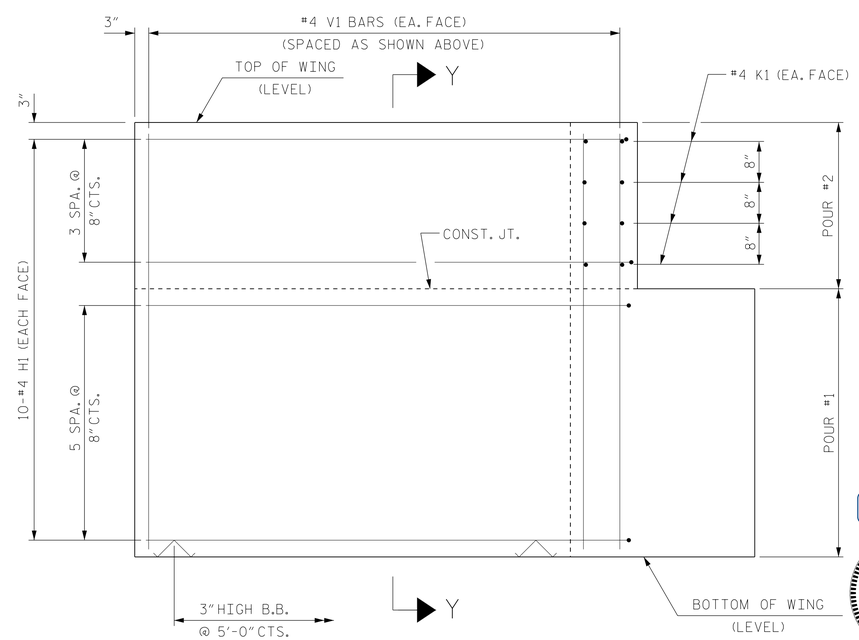

ELEVATION OF WING (W2)

WING DETAILS

DocuSigned by: Jeff Loftus FE51DC02E6794A9... 1/21/2016

NORTH CAROLINA PROFESSIONAL SEAL 041425 ENGINEER JEFFREY M. LOFTUS

DOCUMENT NOT CONSIDERED FINAL UNLESS ALL SIGNATURES COMPLETED

PROJECT NO. 17BP.5.R.58

FRANKLIN COUNTY

STATION: 14+62.50 -L-

SHEET 3 OF 4

STATE OF NORTH CAROLINA
DEPARTMENT OF TRANSPORTATION
RALEIGH

SUBSTRUCTURE

END BENT
WING DETAILS

REVISIONS						SHEET NO.
NO.	BY:	DATE:	NO.	BY:	DATE:	S-13
1			3			TOTAL SHEETS
2			4			19

STEWART

Firm License No. C-1051
421 Fayetteville St,
Suite 400
Raleigh, NC 27601
T 919.380.8750
www.stewartinc.com

ASSEMBLED BY :	H.ASSFOURA	DATE :	03/15
CHECKED BY :	J.LOFTUS	DATE :	06/15
DRAWN BY :	WJH	12/11	
CHECKED BY :	AAC	12/11	

12/17/2015
...\400_013_17BP5R58_SMU_EB03.dgn
USER:jloftus

DocuSign Envelope ID: E4E7C76D-30D2-4EF6-88EA-F70D5C11C909

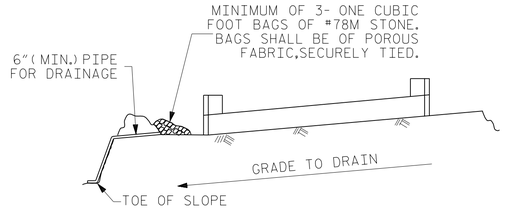

BAGGED STONE AND PIPE SHALL BE PLACED IMMEDIATELY AFTER COMPLETION OF END BENT EXCAVATION. PIPE MAY BE EITHER CONCRETE, CORRUGATED STEEL, CORRUGATED ALUMINUM ALLOY, OR CORRUGATED PLASTIC. PERFORATED PIPE WILL NOT BE ALLOWED.

BAGGED STONE SHALL REMAIN IN PLACE UNTIL THE ENGINEER DIRECTS THAT IT BE REMOVED. THE CONTRACTOR SHALL REMOVE AND DISPOSE OF SILT ACCUMULATIONS AT BAGGED STONE WHEN SO DIRECTED BY THE ENGINEER. BAGS SHALL BE REMOVED AND REPLACED WHENEVER THE ENGINEER DETERMINES THAT THEY HAVE DETERIORATED AND LOST THEIR EFFECTIVENESS.

NO SEPARATE PAYMENT WILL BE MADE FOR THIS WORK AND THE ENTIRE COST OF THIS WORK SHALL BE INCLUDED IN THE UNIT CONTRACT PRICE BID FOR THE SEVERAL PAY ITEMS.

TEMPORARY DRAINAGE AT END BENT

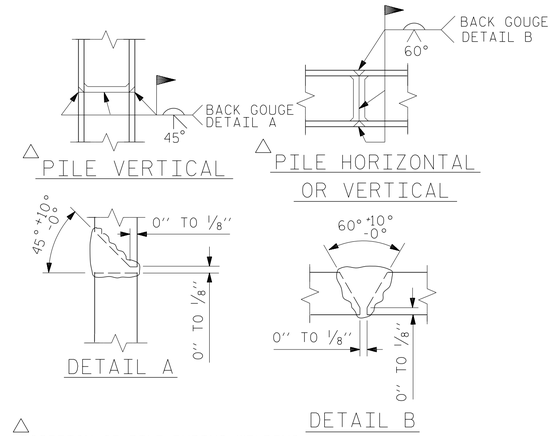

△ POSITION OF PILE DURING WELDING.

PILE SPLICE DETAILS

BAR TYPES

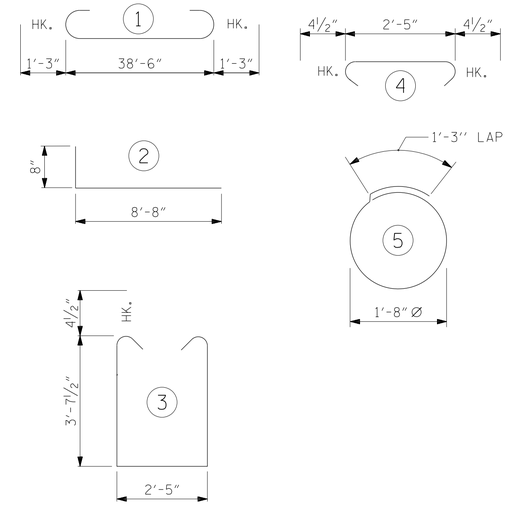

ALL BAR DIMENSIONS ARE OUT TO OUT.

END BENT No. 1	END BENT No. 2
HP 12 X 53 STEEL PILES	HP 12 X 53 STEEL PILES
NO: 7 LIN. FT.= 70	NO: 7 LIN. FT.= 70

BILL OF MATERIAL FOR ONE END BENT

BAR	NO.	SIZE	TYPE	LENGTH	WEIGHT
B1	8	#9	1	41'-0"	1115
B2	28	#4	STR	20'-7"	385
B3	10	#4	STR	2'-5"	16
D1	22	#6	STR	1'-6"	50
H1	40	#4	2	9'-4"	249
K1	16	#4	STR	2'-11"	31
S1	50	#4	3	10'-5"	348
S2	50	#4	4	3'-2"	106
S3	28	#4	5	6'-6"	122
V1	52	#4	STR	6'-2"	214

REINFORCING STEEL (FOR ONE END BENT) 2636 LBS.

CLASS A CONCRETE BREAKDOWN (FOR ONE END BENT)

POUR #1 CAP, LOWER PART OF WINGS & COLLARS 19.5 C.Y.

POUR #2 UPPER PART OF WINGS 2.3 C.Y.

TOTAL CLASS A CONCRETE 21.8 C.Y.

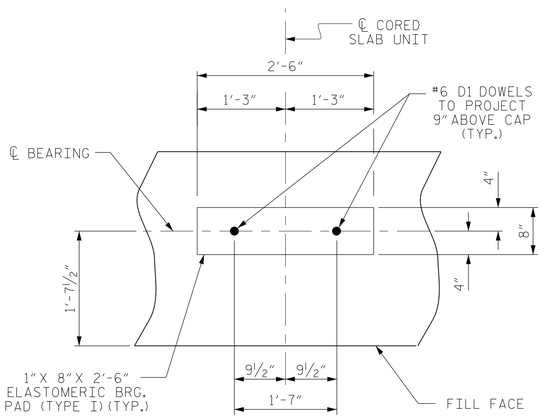

DETAIL "A"

(END BENT No. 1 SHOWN, END BENT No. 2 SIMILAR BY ROTATION)

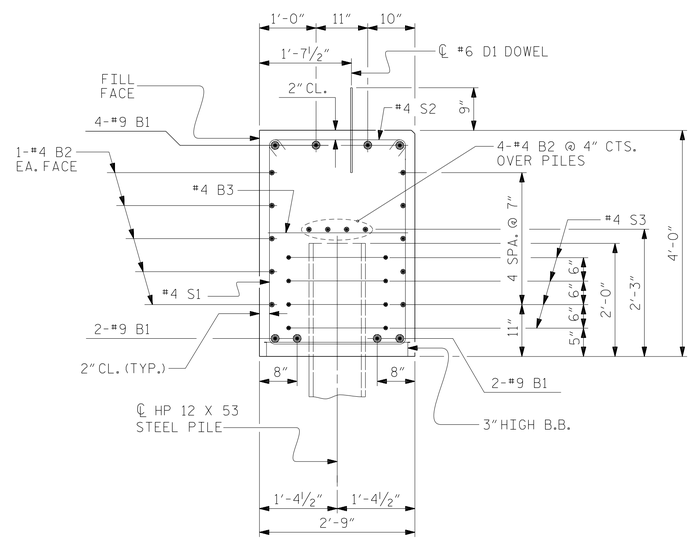

SECTION A-A

(CONCRETE COLLAR NOT SHOWN FOR CLARITY. SEE "CORROSION PROTECTION FOR STEEL PILES DETAIL.")

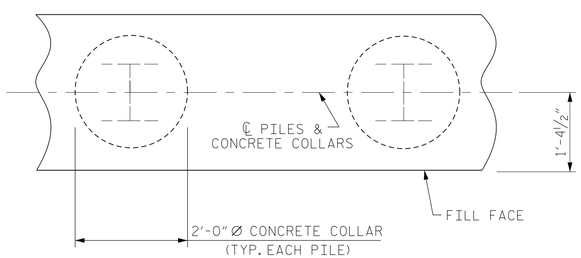

PLAN

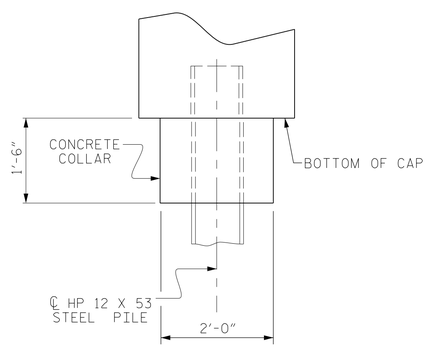

ELEVATION

CORROSION PROTECTION FOR STEEL PILES DETAIL

(END BENT No. 1 SHOWN, END BENT No. 2 SIMILAR BY ROTATION)

PROJECT NO. 17BP.5.R.58

FRANKLIN COUNTY

STATION: 14+62.50 -L-

SHEET 4 OF 4

DocuSigned by: Jeff Loftus FE51DC02E8704A8 1/21/2016

NORTH CAROLINA PROFESSIONAL SEAL 041425 ENGINEER JEFFREY M. LOFTUS

DOCUMENT NOT CONSIDERED FINAL UNLESS ALL SIGNATURES COMPLETED

STEWART

Firm License No. C-1051
421 Fayetteville St,
Suite 400
Raleigh, NC 27601
T 919.380.8750
www.stewartinc.com

STATE OF NORTH CAROLINA
DEPARTMENT OF TRANSPORTATION
RALEIGH

SUBSTRUCTURE

END BENT No. 1 & 2 DETAILS

REVISIONS						SHEET NO.
NO.	BY:	DATE:	NO.	BY:	DATE:	S-14
1			3			TOTAL SHEETS
2			4			19

ASSEMBLED BY :	H.ASSFOURA	DATE :	03/15
CHECKED BY :	J.LOFTUS	DATE :	06/15
DRAWN BY :	WJH		12/11
CHECKED BY :	AAC		12/11

12/17/2015
...\400_014_17BP5R58_SMU_EB04.dgn
USER:jloftus

DocuSign Envelope ID: E4E7C76D-30D2-4EF6-88EA-F70D5C11C909

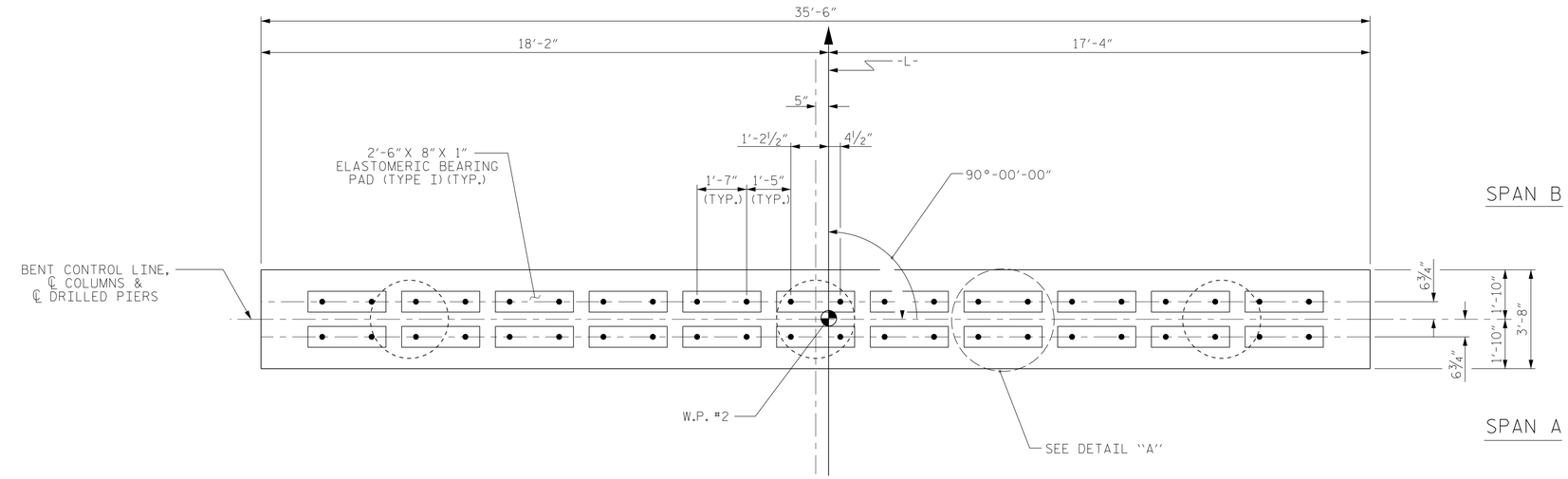

PLAN

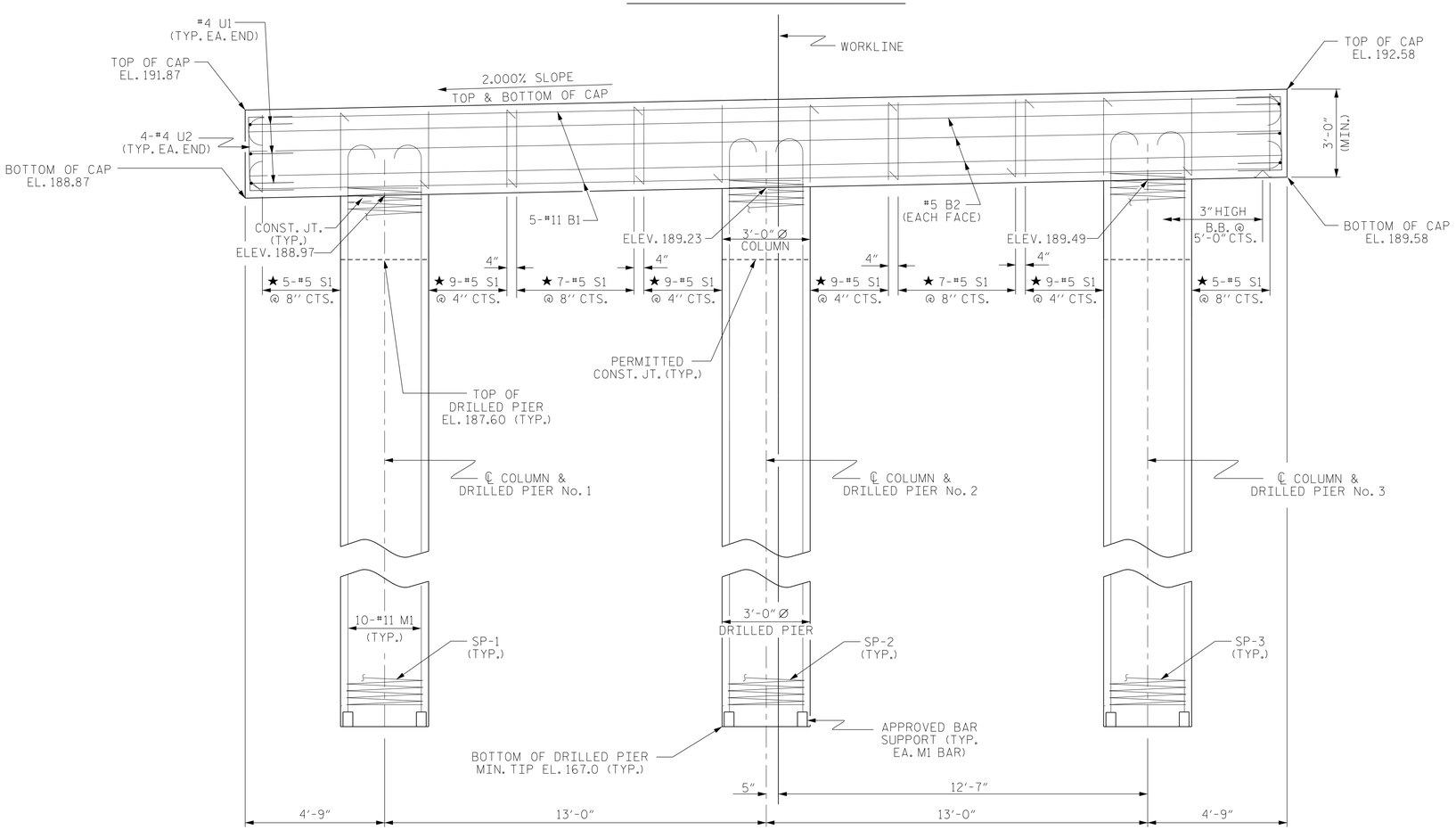

ELEVATION

DIMENSIONS & REINFORCING STEEL ARE TYPICAL FOR EACH COLUMN & DRILLED PIER UNLESS OTHERWISE NOTED.

NOTES

STIRRUPS IN CAP MAY BE SHIFTED AS NECESSARY TO CLEAR DOWELS.

HOOKS ON "M" BARS MAY BE TURNED AS NECESSARY FOR PLACING REINFORCING STEEL.

FOR DRILLED PIERS, SEE SECTION 411 OF THE STANDARD SPECIFICATIONS.

ALL STEEL IN THE DRILLED PIERS IS INCLUDED IN THE PAY ITEMS FOR "REINFORCING STEEL" AND "SPIRAL COLUMN REINFORCING STEEL."

★ INVERT ALTERNATE STIRRUPS.

THE LOCATION OF THE CONSTRUCTION JOINT IN THE DRILLED PIERS IS BASED ON AN APPROXIMATE GROUND LINE ELEVATION. IF THE CONSTRUCTION JOINT IS ABOVE THE ACTUAL GROUND LINE ELEVATION, THE CONTRACTOR SHALL PLACE THE CONSTRUCTION JOINT ONE FOOT BELOW THE GROUND LINE.

DRILLED PIERS SHALL BE TERMINATED ONE FOOT ± ABOVE NORMAL WATER SURFACE ELEVATION FOR SHAFTS LOCATED IN WATER.

THE CONTRACTOR'S ATTENTION IS CALLED TO THE FACT THAT THE LONGITUDINAL REINFORCEMENT FOR DRILLED PIERS IS DETAILED WITH 3 FEET OF EXTRA LENGTH.

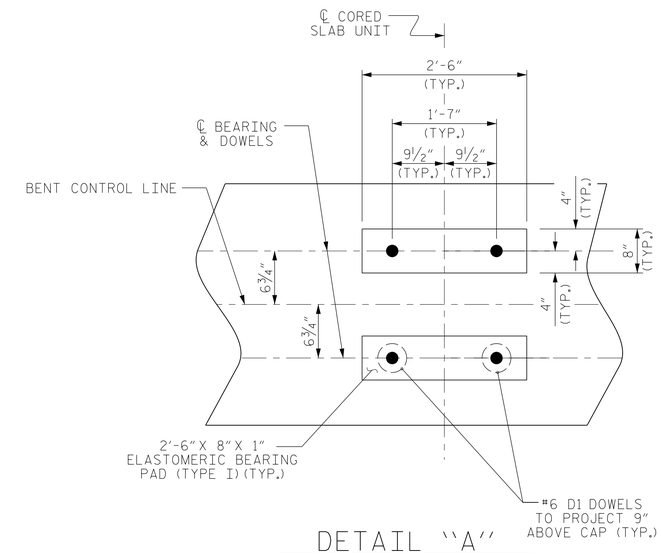

DETAIL "A"

(DIMENSIONS ARE TYPICAL EACH BEARING)

PROJECT NO. 17BP.5.R.58

FRANKLIN COUNTY

STATION: 14+62.50 -L-

SHEET 1 OF 2

DocuSigned by: Jeff LoFtus FE51DC02EE794A9 1/21/2016

NORTH CAROLINA PROFESSIONAL SEAL 041425 ENGINEER JEFFREY M. LOFTUS

DOCUMENT NOT CONSIDERED FINAL UNLESS ALL SIGNATURES COMPLETED

STEWART

Firm License No. C-1051
421 Fayetteville St,
Suite 400
Raleigh, NC 27601
T 919.380.8750
www.stewartinc.com

STATE OF NORTH CAROLINA
DEPARTMENT OF TRANSPORTATION
RALEIGH

SUBSTRUCTURE
BENT No. 1

REVISIONS						SHEET NO.
NO.	BY:	DATE:	NO.	BY:	DATE:	S-15
1			3			TOTAL SHEETS
2			4			19

DRAWN BY: H.ASSFOURA DATE: 06/15
CHECKED BY: J.LOFTUS DATE: 06/15
DESIGN ENGINEER OF RECORD: J.LOFTUS DATE: 06/15

1/7/2016
...\400_015_17BP5R58_SMU_B01.dgn
USER:jloftus

DocuSign Envelope ID: E4E7C76D-30D2-4EF6-88EA-F70D5C11C909

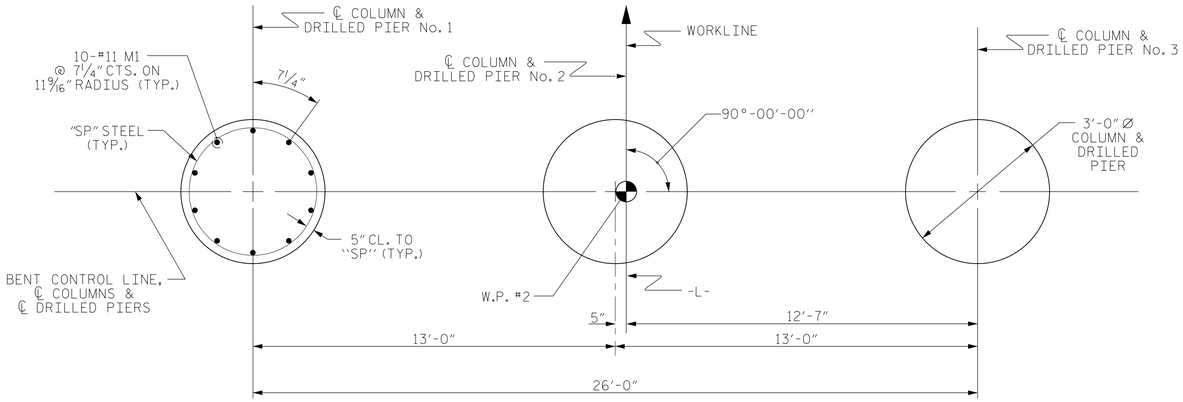

PLAN OF DRILLED PIERS & COLUMNS

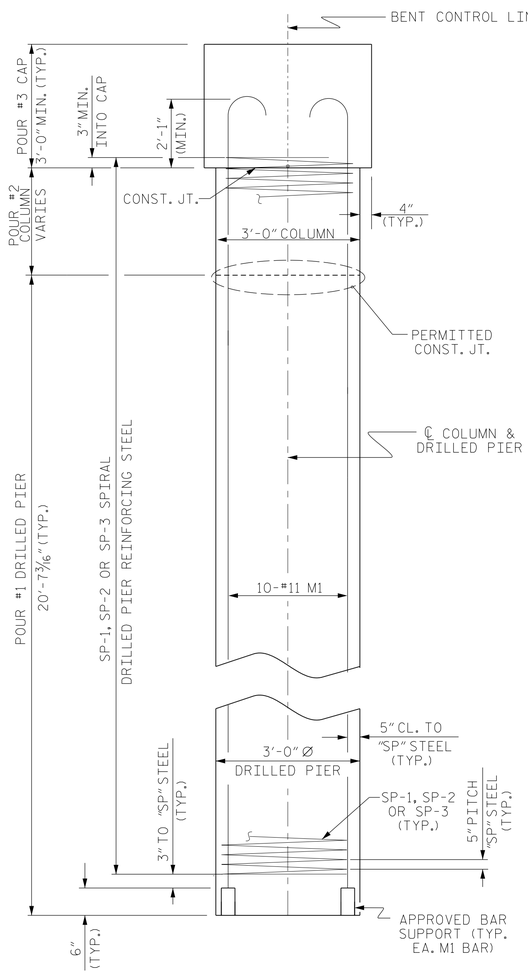

END ELEVATION

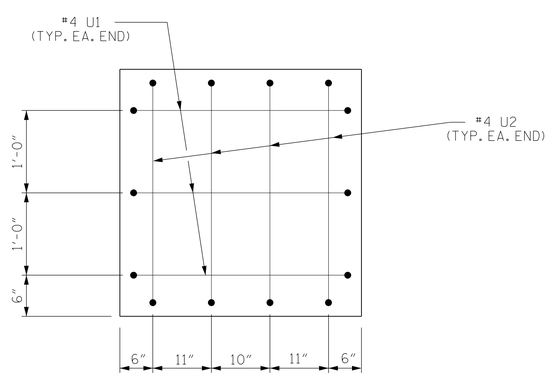

END OF CAP VIEW

(TYPICAL BOTH ENDS)

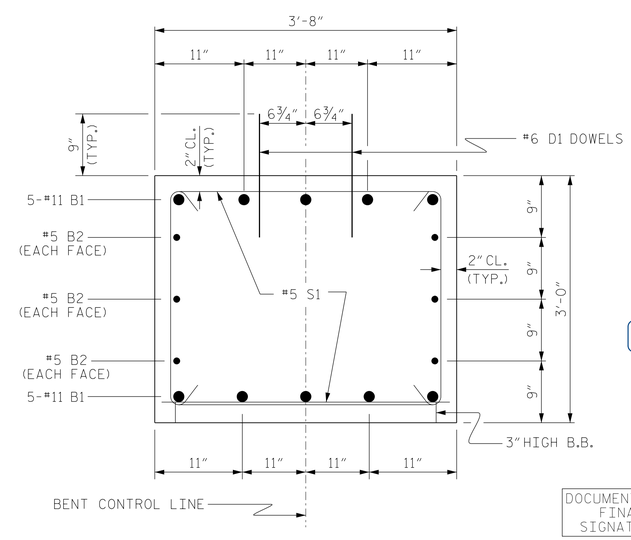

SECTION THRU CAP

BAR TYPES

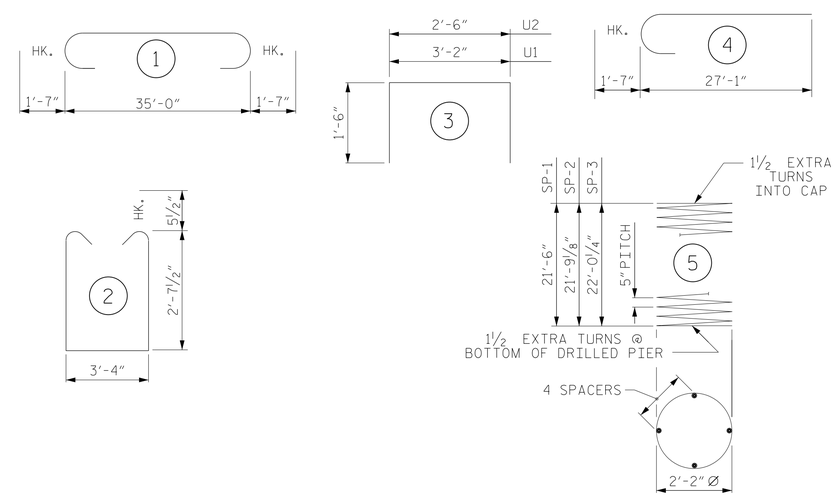

ALL BAR DIMENSIONS ARE OUT TO OUT

BILL OF MATERIAL FOR ONE BENT

BAR	NO.	SIZE	TYPE	LENGTH	WEIGHT
B1	10	#11	1	38'-2"	2028
B2	6	#5	STR	35'-2"	220
D1	44	#6	STR	1'-6"	99
M1	30	#11	4	28'-8"	4569
S1	60	#5	2	9'-6"	595
U1	6	#4	3	6'-2"	25
U2	8	#4	3	5'-6"	29

REINFORCING STEEL (FOR ONE BENT) 7565 LBS.

SP-1	1	*	5	363'-5"	379
SP-2	1	*	5	367'-7"	383
SP-3	1	*	5	371'-9"	388

SPIRAL COLUMN REINFORCING STEEL (FOR ONE BENT) 1150 LBS.

* THE SP-1, SP-2 & SP-3 SPIRAL REINFORCING STEEL SHALL BE W31 OR D-31 COLD DRAWN WIRE OR #5 PLAIN OR DEFORMED BAR

CLASS A CONCRETE BREAKDOWN (FOR ONE BENT)

POUR #2 (COLUMNS)	1.3 C.Y.
POUR #3 (CAP)	14.5 C.Y.
TOTAL CLASS A CONCRETE	15.8 C.Y.

DRILLED PIERS: (FOR ONE BENT)

DRILLED PIER CONCRETE POUR #1 (DRILLED PIERS)	16.2 C.Y.
3'-0" Ø DRILLED PIER NOT IN SOIL	26.0 LIN. FT.
3'-0" Ø DRILLED PIER IN SOIL	35.8 LIN. FT.
PERMANENT STEEL CASING FOR 3'-0" Ø DRILLED PIER	43.8 LIN. FT.
CSL TUBES	265.2 LIN. FT.

PROJECT NO. 17BP.5.R.58

FRANKLIN COUNTY

STATION: 14+62.50 -L-

SHEET 2 OF 2

DocuSigned by: Jeff Loftus FE51DC02E6704A0... 1/21/2016

NORTH CAROLINA PROFESSIONAL SEAL 041425 ENGINEER JEFFREY M. LOFTUS

DOCUMENT NOT CONSIDERED FINAL UNLESS ALL SIGNATURES COMPLETED

Firm License No. C-1051
421 Fayetteville St,
Suite 400
Raleigh, NC 27601
T 919.380.8750
www.stewartinc.com
STEWART

STATE OF NORTH CAROLINA
DEPARTMENT OF TRANSPORTATION
RALEIGH

SUBSTRUCTURE

BENT No. 1

REVISIONS								SHEET NO.
NO.	BY:	DATE:	NO.	BY:	DATE:			S-16
1			3					TOTAL SHEETS
2			4					19

DRAWN BY: H.ASSFOURA DATE : 06/15
CHECKED BY: J.LOFTUS DATE : 06/15
DESIGN ENGINEER OF RECORD: J.LOFTUS DATE : 06/15

1/8/2016
...\400_016_17BP5R58_SMU_B02.dgn
USER:jloftus

DocuSign Envelope ID: E4E7C76D-30D2-4EF6-88EA-F70D5C11C909

NOTES :

FOR BERM WIDTH DIMENSIONS, SEE GENERAL DRAWING.

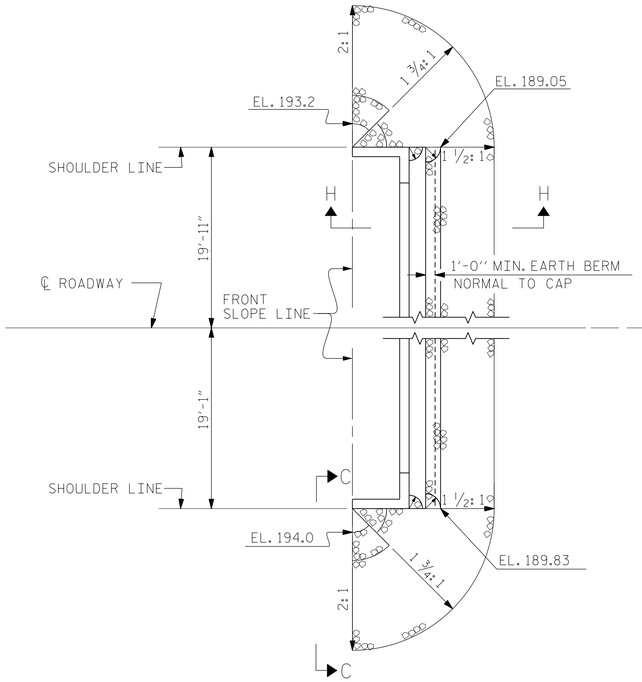

END BENT NO. 1

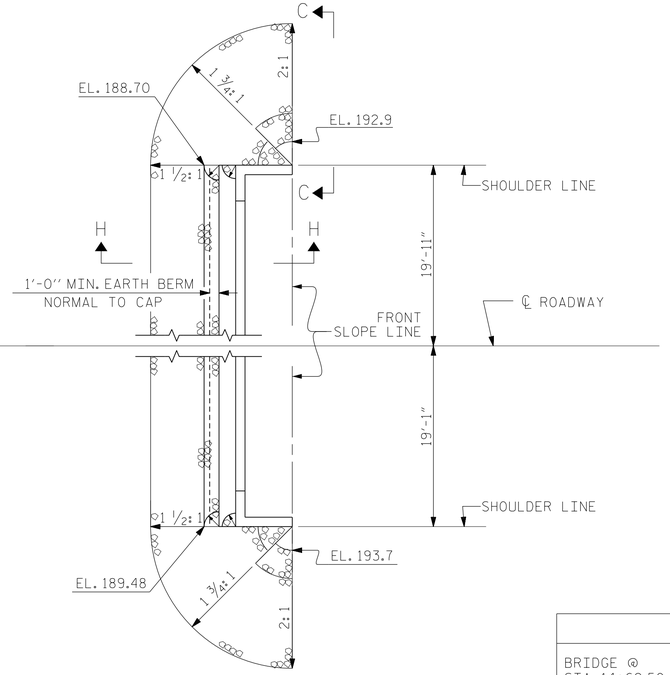

END BENT NO. 2

PLAN

ESTIMATED QUANTITIES		
BRIDGE @ STA. 14+62.50 -L-	RIP RAP CLASS II (2'-0" THICK)	GEOTEXTILE FOR DRAINAGE
	TONS	SQUARE YARDS
END BENT 1	54.0	60.0
END BENT 2	50.9	56.6
BANK STAB. - END BENT 2	✳125.0	✳131.0

✳SEE GENERAL PLAN DWG FOR LIMITS OF BANK STABILIZATION CLASS II RIP RAP

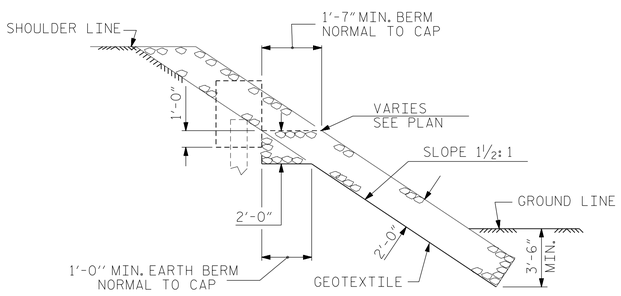

SECTION H-H

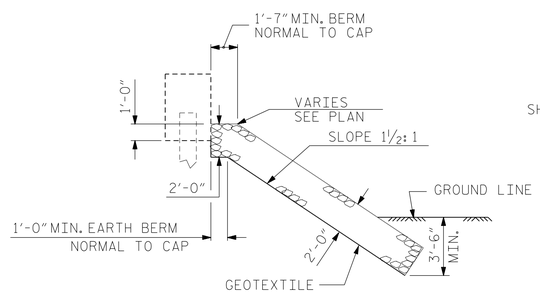

℄ SECTION

BERM RIP RAPPED

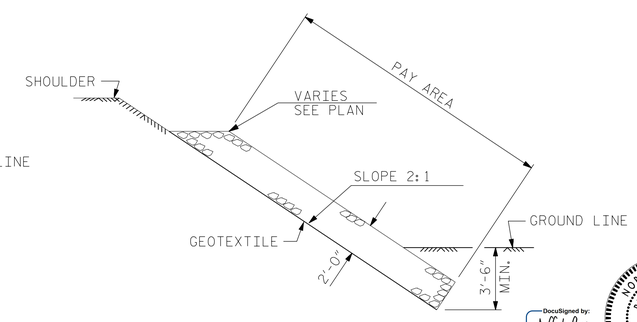

SECTION C-C

DocuSigned by: Jeff Loftus
FE51DC02E6794A9...
1/21/2016

NORTH CAROLINA PROFESSIONAL SEAL 041425 ENGINEER JEFFREY M. LOFTUS

DOCUMENT NOT CONSIDERED FINAL UNLESS ALL SIGNATURES COMPLETED

PROJECT NO. 17BP.5.R.58

FRANKLIN COUNTY

STATION: 14+62.50 -L-

STEWART

Firm License No. C-1051
421 Fayetteville St,
Suite 400
Raleigh, NC 27601
T 919.380.8750
www.stewartinc.com

STATE OF NORTH CAROLINA
DEPARTMENT OF TRANSPORTATION
RALEIGH

STANDARD

RIP RAP DETAILS

REVISIONS						
NO.	BY:	DATE:	NO.	BY:	DATE:	
1			3			
2			4			

SHEET NO. S-17

TOTAL SHEETS 19

DRAWN BY: H.ASSFOURA DATE : 03/15
CHECKED BY: J.LOFTUS DATE : 06/15
DESIGN ENGINEER OF RECORD: J.LOFTUS DATE : 06/15

12/17/2015
...\400_017_17BP5R58_SMU_RR01.dgn
USER:jloftus

DocuSign Envelope ID: E4E7C76D-30D2-4EF6-88EA-F70D5C11C909

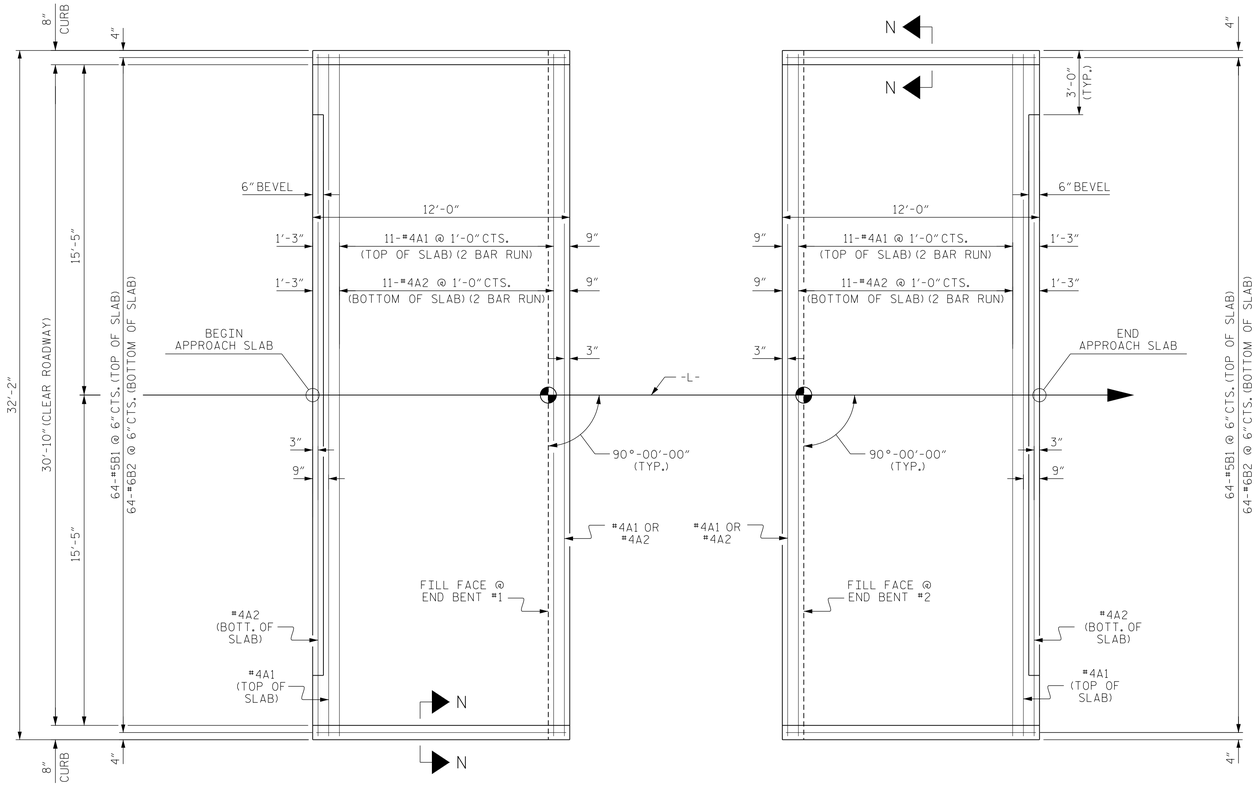

PLAN @ END BENT #1

PLAN @ END BENT #2

DIMENSIONS SHOWN ARE TYPICAL FOR BOTH APPROACH SLABS

NOTES

FOR REINFORCED BRIDGE APPROACH FILL INCLUDING GEOTEXTILE, IMPERMEABLE GEOMEMBRANE, 4" Ø DRAINAGE PIPE, #78M STONE, AND SELECT MATERIAL, SEE ROADWAY PLANS.

AREA BETWEEN THE WINGWALL AND APPROACH SLAB SHALL BE GRADED TO DRAIN THE WATER AWAY FROM THE FILL FACE OF THE BRIDGE AND SHALL BE PAVED. SEE ROADWAY PLANS.

APPROACH SLAB GROOVING IS NOT REQUIRED.

BILL OF MATERIAL

APPROACH SLAB AT EB #1

BAR	NO.	SIZE	TYPE	LENGTH	WEIGHT
* A1	26	#4	STR	16'-11"	294
A2	26	#4	STR	16'-9"	291
* B1	64	#5	STR	11'-2"	745
B2	64	#6	STR	11'-8"	1121
REINFORCING STEEL				LBS.	1412
* EPOXY COATED REINFORCING STEEL				LBS.	1039
CLASS AA CONCRETE				C.Y.	19.5

APPROACH SLAB AT EB #2

BAR	NO.	SIZE	TYPE	LENGTH	WEIGHT
* A1	26	#4	STR	16'-11"	294
A2	26	#4	STR	16'-9"	291
* B1	64	#5	STR	11'-2"	745
B2	64	#6	STR	11'-8"	1121
REINFORCING STEEL				LBS.	1412
* EPOXY COATED REINFORCING STEEL				LBS.	1039
CLASS AA CONCRETE				C.Y.	19.5

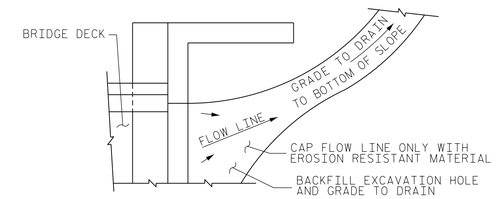

NOTE: IF THE APPROACH SLAB IS NOT CONSTRUCTED IMMEDIATELY AFTER THE BACKFILLING OF THE END BENT EXCAVATION, GRADE TO DRAIN TO THE BOTTOM OF THE SLOPE AND PROVIDE EROSION RESISTANT MATERIAL, SUCH AS FIBERGLASS ROVING OR AS DIRECTED BY THE ENGINEER TO PREVENT SOIL EROSION AND TO PROTECT THE AREA ADJACENT TO THE STRUCTURE. THE CONTRACTOR WILL BE REQUIRED TO REMOVE THESE MATERIALS PRIOR TO CONSTRUCTION OF THE APPROACH SLAB.

TEMPORARY DRAINAGE DETAIL

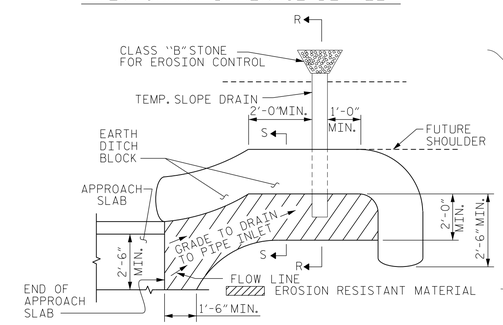

NOTE: IMMEDIATELY AFTER THE CONSTRUCTION OF THE APPROACH SLAB, THE CONTRACTOR SHALL PROVIDE TEMPORARY BERM AND SLOPE DRAIN. CONTRACTOR SHALL GRADE TO PIPE INLET AND PROVIDE EROSION RESISTANT MATERIAL AS SHOWN. THE EROSION RESISTANT MATERIAL SHALL BE EITHER 1) ASPHALT PLANT MIX, TYPE 1 OR TYPE 2, MIN. 2" DEPTH, 2) EROSION CONTROL MAT, OR 3) CONCRETE, AS DIRECTED BY THE ENGINEER. THE SLOPE DRAIN SHALL CONSIST OF A NON-PERFORATED TEMPORARY DRAINAGE PIPE, 12 INCHES IN DIAMETER.

PLAN VIEW

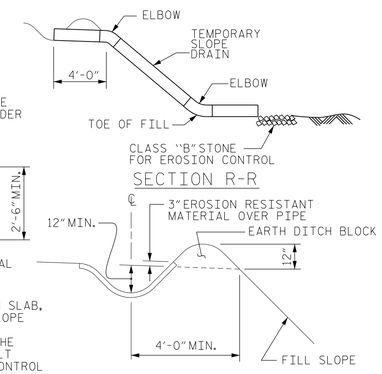

TEMPORARY BERM AND SLOPE DRAIN DETAILS

(TO BE USED WHEN SHOULDER BERM GUTTER IS REQUIRED)

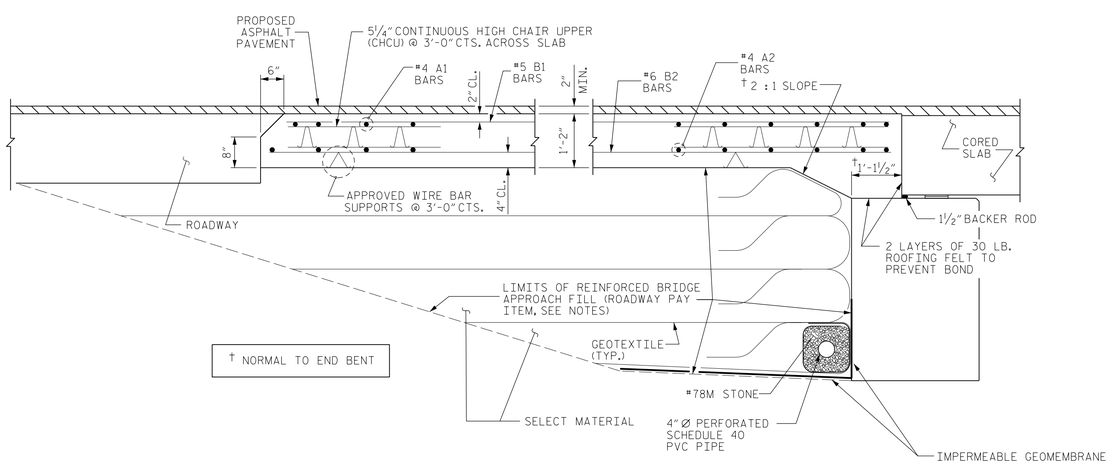

† NORMAL TO END BENT

SECTION THRU SLAB

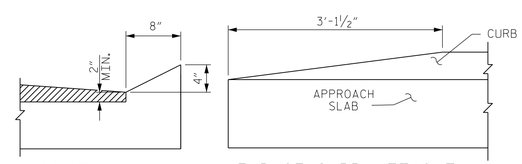

SECTION N-N

END OF CURB WITHOUT SHOULDER BERM GUTTER

CURB DETAILS

SPLICE LENGTHS		
BAR SIZE	EPOXY COATED	UNCOATED
#4	2'-0"	1'-9"
#5	2'-6"	2'-2"
#6	3'-10"	2'-7"

DocuSigned by: Jeff Loftus FE51DC02E8794A9 1/21/2016

NORTH CAROLINA PROFESSIONAL SEAL 041425 ENGINEER JEFFREY M. LOFTUS

DOCUMENT NOT CONSIDERED FINAL UNLESS ALL SIGNATURES COMPLETED

STEWART

Firm License No. C-1051
421 Fayetteville St,
Suite 400
Raleigh, NC 27601
T 919.380.8750
www.stewartinc.com

PROJECT NO. 17BP.5.R.58

FRANKLIN COUNTY

STATION: 14+62.50 -L-

STATE OF NORTH CAROLINA
DEPARTMENT OF TRANSPORTATION
RALEIGH

STANDARD
BRIDGE APPROACH SLAB
FOR PRESTRESSED CONCRETE
CORED SLAB UNIT
90° SKEW

REVISIONS						SHEET NO.
NO.	BY:	DATE:	NO.	BY:	DATE:	S-18
1			3			TOTAL SHEETS
2			4			19

ASSEMBLED BY : H.ASSFOURA	DATE : 03-15
CHECKED BY : J.LOFTUS	DATE : 05-15
DRAWN BY : SHS/MAA 5-09	REV. 9-15 MAA/TMG
CHECKED BY : BCH 5-09	

1/7/2016
...\400_018_17BP5R58_SMU_BAS01.dgn
USER:jloftus

DocuSign Envelope ID: E4E7C76D-30D2-4EF6-88EA-F70D5C11C909

STANDARD NOTES

DESIGN DATA:

SPECIFICATIONS	A.A.S.H.T.O. (CURRENT)
LIVE LOAD	SEE PLANS
IMPACT ALLOWANCE	SEE A.A.S.H.T.O.
STRESS IN EXTREME FIBER OF	
STRUCTURAL STEEL - AASHTO M270 GRADE 36	20,000 LBS. PER SQ. IN.
- AASHTO M270 GRADE 50W	27,000 LBS. PER SQ. IN.
- AASHTO M270 GRADE 50	27,000 LBS. PER SQ. IN.
REINFORCING STEEL IN TENSION	
GRADE 60	24,000 LBS. PER SQ. IN.
CONCRETE IN COMPRESSION	1,200 LBS. PER SQ. IN.
CONCRETE IN SHEAR	SEE A.A.S.H.T.O.
STRUCTURAL TIMBER - TREATED OR	
UNTREATED - EXTREME FIBER STRESS	1,800 LBS. PER SQ. IN.
COMPRESSION PERPENDICULAR TO GRAIN OF TIMBER	375 LBS. PER SQ. IN.
EQUIVALENT FLUID PRESSURE OF EARTH	30 LBS. PER CU. FT. (MINIMUM)

MATERIAL AND WORKMANSHIP:

EXCEPT AS MAY OTHERWISE BE SPECIFIED ON PLANS OR IN THE SPECIAL PROVISIONS, ALL MATERIAL AND WORKMANSHIP SHALL BE IN ACCORDANCE WITH THE 2012 "STANDARD SPECIFICATIONS FOR ROADS AND STRUCTURES" OF THE N. C. DEPARTMENT OF TRANSPORTATION.

STEEL SHEET PILING FOR PERMANENT OR TEMPORARY APPLICATIONS SHALL BE HOT ROLLED.

CONCRETE:

UNLESS OTHERWISE REQUIRED ON PLANS, CLASS A CONCRETE SHALL BE USED FOR ALL PORTIONS OF ALL STRUCTURES WITH THE EXCEPTION THAT: CLASS AA CONCRETE SHALL BE USED IN BRIDGE SUPERSTRUCTURES, ABUTMENT BACKWALLS, AND APPROACH SLABS; AND CLASS B CONCRETE SHALL BE USED FOR SLOPE PROTECTION AND RIP RAP.

CONCRETE CHAMFERS:

UNLESS OTHERWISE NOTED ON THE PLANS, ALL EXPOSED CORNERS ON STRUCTURES SHALL BE CHAMFERED 3/4" WITH THE FOLLOWING EXCEPTIONS: TOP CORNERS OF CURBS MAY BE ROUNDED TO 1-1/2" RADIUS WHICH IS BUILT INTO CURB FORMS; CORNERS OF TRANSVERSE FLOOR EXPANSION JOINTS SHALL BE ROUNDED WITH A 1/4" FINISHING TOOL UNLESS OTHERWISE REQUIRED ON PLANS; AND CORNERS OF EXPANSION JOINTS IN THE ROADWAY FACES AND TOPS OF CURBS AND SIDEWALKS SHALL BE ROUNDED TO A 1/4" RADIUS WITH A FINISHING STONE OR TOOL UNLESS OTHERWISE REQUIRED ON PLANS.

DOWELS:

DOWELS WHEN INDICATED ON PLANS AS FOR CULVERT EXTENSIONS, SHALL BE EMBEDDED AT LEAST 12" INTO THE OLD CONCRETE AND GROUTED INTO PLACE WITH 1:2 CEMENT MORTAR.

ALLOWANCE FOR DEAD LOAD DEFLECTION, SETTLEMENT, ETC. IN CASTING SUPERSTRUCTURES:

BRIDGES SHALL BE BUILT ON THE GRADE OR VERTICAL CURVE SHOWN ON PLANS. SLABS, CURBS AND PARAPETS SHALL CONFORM TO THE GRADE OR CURVE.

ALL DIMENSIONS WHICH ARE GIVEN IN SECTION AND ARE AFFECTED BY DEAD LOAD DEFLECTIONS ARE DIMENSIONS AT CENTER LINE OF BEARING UNLESS OTHERWISE NOTED ON PLANS. IN SETTING FORMS FOR STEEL BEAM BRIDGES AND PRESTRESSED CONCRETE GIRDER BRIDGES, ADJUSTMENTS SHALL BE MADE DUE TO THE DEAD LOAD DEFLECTIONS FOR THE ELEVATIONS SHOWN. WHERE BLOCKS ARE SHOWN OVER BEAMS FOR BUILDING UP TO THE SLAB, THE VERTICAL DIMENSIONS OF THE BLOCKS SHALL BE ADJUSTED BETWEEN BEARINGS TO COMPENSATE FOR DEAD LOAD DEFLECTIONS, VERTICAL CURVE ORDINATE, AND ACTUAL BEAM CAMBER. WHERE BOTTOM OF SLAB IS IN LINE WITH BOTTOM OF TOP FLANGES, DEPTH OF SLAB BETWEEN BEARINGS SHALL BE ADJUSTED TO COMPENSATE FOR DEAD LOAD DEFLECTION, VERTICAL CURVE ORDINATE, AND ACTUAL BEAM CAMBER.

IN SETTING FALSEWORK AND FORMS FOR REINFORCED CONCRETE SPANS, AN ALLOWANCE SHALL BE MADE FOR DEAD LOAD DEFLECTIONS, SETTLEMENT OF FALSEWORK, AND PERMANENT CAMBER WHICH SHALL BE PROVIDED FOR IN ADDITION TO THE ELEVATIONS SHOWN. AFTER REMOVAL OF THE FALSEWORK, THE FINISHED STRUCTURES SHALL CONFORM TO THE PROFILE AND ELEVATIONS SHOWN ON THE PLANS AND CONSTRUCTION ELEVATIONS FURNISHED BY THE ENGINEER.

DETAILED DRAWINGS FOR FALSEWORK OR FORMS FOR BRIDGE SUPERSTRUCTURE AND ANY STRUCTURE OR PARTS OF A STRUCTURE AS NOTED ON THE PLANS SHALL BE SUBMITTED TO THE ENGINEER FOR APPROVAL BEFORE CONSTRUCTION OF THE FALSEWORK OR FORMS IS STARTED.

REINFORCING STEEL:

ALL REINFORCING STEEL SHALL BE DEFORMED. DIMENSIONS RELATIVE TO PLACEMENT OF REINFORCING ARE TO CENTERS OF BARS UNLESS OTHERWISE INDICATED IN THE PLANS. DIMENSIONS ON BAR DETAILS ARE TO CENTERS OF BARS OR ARE OUT TO OUT AS INDICATED ON PLANS.

WIRE BAR SUPPORTS SHALL BE PROVIDED FOR REINFORCING STEEL WHERE INDICATED ON THE PLANS. WHEN BAR SUPPORT PIECES ARE PLACED IN CONTINUOUS LINES, THEY SHALL BE SO PLACED THAT THE ENDS OF THE SUPPORTING WIRES SHALL BE LAPPED TO LOCK LEGS ON ADJOINING PIECES.

STRUCTURAL STEEL:

AT THE CONTRACTOR'S OPTION, HE MAY SUBSTITUTE 7/8" Ø SHEAR STUDS FOR THE 3/4" Ø STUDS SPECIFIED ON THE PLANS. THIS SUBSTITUTION SHALL BE MADE AT THE RATE OF 3 - 7/8" Ø STUDS FOR 4 - 3/4" Ø STUDS, AND STUD SPACING CHANGES SHALL BE MADE AS NECESSARY TO PROVIDE THE SAME EQUIVALENT NUMBER OF 7/8" Ø STUDS ALONG THE BEAM AS SHOWN FOR 3/4" Ø STUDS BASED ON THE RATIO OF 3 - 7/8" Ø STUDS FOR 4 - 3/4" Ø STUDS. STUDS OF THE LENGTH SPECIFIED ON THE PLANS MUST BE PROVIDED. THE MAXIMUM SPACING SHALL BE 2'-0".

EXCEPT AT THE INTERIOR SUPPORTS OF CONTINUOUS BEAMS WHERE THE COVER PLATE IS IN CONTACT WITH BEARING PLATE, THE CONTRACTOR MAY, AT HIS OPTION, SUBSTITUTE FOR THE COVER PLATES DESIGNATED ON THE PLANS COVER PLATES OF THE EQUIVALENT AREA PROVIDED THESE PLATES ARE AT LEAST 5/16" IN THICKNESS AND DO NOT EXCEED A WIDTH EQUAL TO THE FLANGE WIDTH LESS 2" OR A THICKNESS EQUAL TO 2 TIMES THE FLANGE THICKNESS. THE SIZE OF FILLET WELDS SHALL CONFORM TO THE REQUIREMENTS OF THE CURRENT ANSI/AASHTO/AWS "BRIDGE WELDING CODE". ELECTROSLAG WELDING WILL NOT BE PERMITTED.

WITH THE SOLE EXCEPTION OF EDGES AT SURFACES WHICH BEAR ON OTHER SURFACES, ALL SHARP EDGES AND ENDS OF SHAPES AND PLATES SHALL BE SLIGHTLY ROUNDED BY SUITABLE MEANS TO A RADIUS OF APPROXIMATELY 1/16 INCH OR EQUIVALENT FLAT SURFACE AT A SUITABLE ANGLE PRIOR TO PAINTING, GALVANIZING, OR METALLIZING.

HANDRAILS AND POSTS:

METAL STANDARDS AND FACES OF THE CONCRETE END POSTS FOR THE METAL RAIL SHALL BE SET NORMAL TO THE GRADE OF THE CURB, UNLESS OTHERWISE SHOWN ON PLANS. THE METAL RAIL AND TOPS OF CONCRETE POSTS USED WITH THE ALUMINUM RAIL SHALL BE BUILT PARALLEL TO THE GRADE OF THE CURB.

METAL HANDRAILS SHALL BE IN ACCORDANCE WITH THE PLANS. RAILS SHALL BE AS MANUFACTURED FOR BRIDGE RAILING. CASTINGS SHALL BE OF A UNIFORM APPEARANCE. FINS AND OTHER DEFORMATIONS RESULTING FROM CASTING OR OTHERWISE SHALL BE REMOVED IN A MANNER SO THAT A UNIFORM COLORING OF THE COMPLETED CASTING SHALL BE OBTAINED. CASTINGS WITH DISCOLORATIONS OR OF NON-UNIFORM COLORING WILL NOT BE ACCEPTED. CERTIFIED MILL REPORTS ARE REQUIRED FOR METAL RAILS AND POSTS.

SPECIAL NOTES:

GENERALLY, IN CASE OF DISCREPANCY, THIS STANDARD SHEET OF NOTES SHALL GOVERN OVER THE SPECIFICATIONS, BUT THE REMAINDER OF THE PLANS SHALL GOVERN OVER NOTES HEREON, AND SPECIAL PROVISIONS SHALL GOVERN OVER ALL. SEE SPECIFICATIONS ARTICLE 105-4.

PROJECT NO. 17BP.5.R.58
FRANKLIN COUNTY
STATION: 14+62.50 -L-

DocuSigned by: Jeff Loftus FE51DC02E6794A9 1/21/2016

NORTH CAROLINA PROFESSIONAL SEAL 041425 ENGINEER JEFFREY M. LOFTUS

DOCUMENT NOT CONSIDERED FINAL UNLESS ALL SIGNATURES COMPLETED

STEWART
Firm License No. C-1051
421 Fayetteville St,
Suite 400
Raleigh, NC 27601
T 919.380.8750
www.stewartinc.com

STATE OF NORTH CAROLINA
DEPARTMENT OF TRANSPORTATION
RALEIGH

STANDARD NOTES

REVISIONS								SHEET NO.
NO.	BY:	DATE:	NO.	BY:	DATE:			S-19
1			3					TOTAL SHEETS
2			4					19

ENGLISH

JANUARY, 1990

REV. 6-16-95 EEM (✓) RGW REV. 5-7-03 RWW (✓) JTE REV. 10-1-11 MAA (✓) GM
REV. 8-16-99 RWW (✓) LES REV. 5-1-06 TLA (✓) GM

BRIDGE 920089

12/17/2015
...\400_019_17BP5R58_SMU_SN01.dgn
USER:jloftus