STATE OF NORTH CAROLINA

DEPARTMENT OF TRANSPORTATION

DIVISION FIVE

CONTRACT PROPOSAL

CONTRACT #: DE00063 FEDERAL AID #: N/A
WBS ELEMENT: 43445.3.1
COUNTY: Wake
ROUTE: US 401
DESCRIPTION: SS-4905BF, LENGTHEN LEFT TURN LANE AND ADD RIGHT TURN LANES AT SR 1375 (SIMPKINS RD) IN WAKE COUNTY

BID OPENING: 2:00 p.m., Wednesday, June 12, 2013

NOTICE:

ALL BIDDERS SHALL COMPLY WITH ALL APPLICABLE LAWS REGULATING THE PRACTICE OF GENERAL CONTRACTING AS CONTAINED IN CHAPTER 87 OF THE GENERAL STATUTES OF NORTH CAROLINA. THESE LAWS REQUIRE THE BIDDER TO BE LICENSED BY THE N.C. LICENSING BOARD FOR GENERAL CONTRACTORS WHEN BIDDING ON ANY NON-FEDERAL AID PROJECT WHERE THE BID IS $30,000 OR MORE, EXCEPT FOR CERTAIN SPECIALTY WORK AS DETERMINED BY THE LICENSING BOARD. BIDDERS SHALL ALSO COMPLY WITH ALL OTHER APPLICABLE LAWS REGULATING THE PRACTICES OF ELECTRICAL, PLUMBING, HEATING AND AIR CONDITIONING AND REFRIGERATION CONTRACTING AS CONTAINED IN CHAPTER 87 OF THE GENERAL STATUTES OF NORTH CAROLINA. NOT WITHSTANDING THESE LIMITATIONS ON BIDDING, THE BIDDER WHO IS AWARDED ANY PROJECT SHALL COMPLY WITH CHAPTER 87 OF THE GENERAL STATUTES OF NORTH CAROLINA FOR LICENSING REQUIREMENTS WITHIN 60 CALENDAR DAYS OF BID OPENING, REGARDLESS OF FUNDING SOURCES.

_____

NAME OF BIDDER N.C. CONTRACTOR'S LICENSE NUMBER

_____

ADDRESS OF BIDDER

RETURN BIDS TO:

DIVISION ENGINEER
ATTENTION: Michael J. Kneis, PE
NORTH CAROLINA DEPARTMENT OF TRANSPORTATION
2612 NORTH DUKE STREET
DURHAM, NC 27704

INSTRUCTIONS TO BIDDERS 5

STANDARD PROVISIONS 7

GENERAL 7
CONTRACT TIME AND LIQUIDATED DAMAGES 7
INTERMEDIATE CONTRACT TIME NUMBER 1 AND LIQUIDATED DAMAGES 7
INTERMEDIATE CONTRACT TIME NUMBER 2 AND LIQUIDATED DAMAGES 8
AUTHORITY OF THE ENGINEER 9
BIDS 9
AVAILABILITY OF FUNDS – TERMINATION OF CONTRACTS 9
PROSECUTION AND PROGRESS 9
MATERIALS AND TESTING 9
TRAFFIC CONTROL AND WORK ZONE SAFETY 10
SAFETY VESTS 10
SUPERVISION BY CONTRACTOR 10
WORK SITE CLEANUP 11
CONTRACT PAYMENT AND PERFORMANCE BOND 11
LIABILITY INSURANCE 11
WORKERS' COMPENSATION INSURANCE 11
BANKRUPTCY 11
SUBLETTING OF CONTRACT 11
DEBARMENT STATEMENT 11
DEFAULT OF CONTRACT 11
CONTRACTOR CLAIM SUBMITTAL FORM 12
PROMPT PAYMENT 12
PAYMENT AND RETAINAGE 12
UTILITY CONFLICTS 12
SAFETY AND ACCIDENT PROTECTION 12
PLAN, DETAIL AND QUANTITY ADJUSTMENTS 13
CONTRACTOR'S LICENSE REQUIREMENTS 13
LOCATING EXISTING UNDERGROUND UTILITIES 13
RESOURCE CONSERVATION 13
DOMESTIC STEEL 13
GIFTS FROM VENDORS AND CONTRACTORS 14
EROSION AND SEDIMENT CONTROL/STORMWATER CERTIFICATION 14
PROCEDURE FOR MONITORING BORROW PIT DISCHARGE 18
EMPLOYMENT 19
STATE HIGHWAY ADMINISTRATOR TITLE CHANGE 19
MATERIALS 20
SHOULDER AND SLOPE BORROW 23
MINORITY BUSINESS ENTERPRISE AND WOMEN BUSINESS ENTERPRISE (DIVISIONS) 23

SPECIAL PROVISIONS 34

CONSTRUCTION METHODS 34
SITE INVESTIGATION AND REPRESENTATION 34
CONTROL OF EROSION, SILT AND POLLUTION 34
DRIVEWAYS AND PRIVATE PROPERTY 34
NO MAJOR CONTRACT ITEMS 34
SPECIALTY ITEMS 34
CLEARING AND GRUBBING - METHOD II 34
PIPE INSTALLATION 35
ASPHALT PAVEMENTS - SUPERPAVE 35
ASPHALT PAVER - FIXED AND MOBILE STRING LINE 36
ASPHALT BINDER CONTENT OF ASPHALT PLANT MIXES 36
FUEL PRICE ADJUSTMENT 37
ASPHALT PLANT MIXTURES 37
PRICE ADJUSTMENT - ASPHALT BINDER FOR PLANT MIX 37
FINAL SURFACE TESTING NOT REQUIRED 37

SHOULDER WEDGE 37
LAW ENFORCEMENT 38
PERMANENT SOIL REINFORCEMENT MAT 38
WATTLES WITH POLYACRYLAMIDE (PAM) 39
STABILIZATION REQUIREMENTS 41
SEEDING AND MULCHING (EAST) 41
LAWN TYPE APPEARANCE 42
TEMPORARY SEEDING 42
SUPPLEMENTAL SEEDING 42
FERTILIZER TOPDRESSING 42
STOCKPILE AREAS 43
MOWING 43
WASTE AND BORROW SOURCES 43
RESPONSE FOR EROSION CONTROL 43
DEPARTMENT FURNISHED SIGNS FOR PURCHASE ORDERS 44
SIGNALS AND INTELLIGENT TRANSPORTION SYSTEMS PROVISIONS 45
ERRATA 47
MINIMUM WAGES 48
ON-THE-JOB TRAINING 48
NCDOT GENERAL SEED SPECIFICATION FOR SEED QUALITY 50

LISTING OF MBE WBE SUBCONTRACTORS
AWARD LIMITS ON MULTIPLE PROJECTS
BIDFORM
EXECUTION OF BID – NON-COLLUSION AFFIDAVIT, DEBAREMENT CERTIFICATION AND GIFT BAN CERFTIFICATION
DEBARMENT CERTIFICATION
BID ACCEPTANCE SHEET

SS-4905BF PLAN SHEETS

INSTRUCTIONS TO BIDDERS

PLEASE READ ALL INSTRUCTIONS CAREFULLY
BEFORE PREPARING AND SUBMITTING YOUR BID.

All bids shall be prepared and submitted in accordance with the following requirements. Failure to comply with any requirement shall cause the bid to be considered irregular and shall be grounds for rejection of the bid. Bidders must be prequalified for the type of work they wish to perform prior to submitting a bid.

1. The bid sheet furnished by NCDOT with the proposal shall be used and shall not be altered in any manner. **DO NOT SEPARATE THE BID SHEET FROM THE PROPOSAL!**
2. All entries on the bid sheet, including signatures, shall be written in ink.
3. The Bidder shall submit a unit price for every item on the bid form. The unit prices for the various contract items shall be written in figures.
4. An amount bid shall be entered on the bid sheet for every item. The amount bid for each item shall be determined by multiplying each unit bid by the quantity for that item, and shall be written in figures in the "Amount Bid" column of the sheet.
5. The total amount bid shall be written in figures in the proper place on the bid sheet. The total amount shall be determined by adding the amounts bid for each item.
6. Changes in any entry shall be made by marking through the entry in ink and making the correct entry adjacent thereto in ink. A representative of the Bidder shall initial the change in ink.
7. The bid shall be properly executed. All bids shall show the following information:
   a. Name of individual, firm, corporation, partnership, or joint venture submitting bid.
   b. Name of individual or representative submitting bid and position or title.
   c. Name, signature, and position or title of witness.
   d. Federal Identification Number (or Social Security Number of Individual)
   e. Contractor's License Number (if Applicable)
8. Bids submitted by corporations shall bear the seal of the corporation.
9. The bid shall not contain any unauthorized additions, deletions, or conditional bids.
10. The bidder shall not add any provision reserving the right to accept or reject an award, or to enter into a contract pursuant to an award.
11. **<u>THE PROPOSAL WITH THE BID SHEET STILL ATTACHED</u> SHALL BE PLACED IN A SEALED ENVELOPE AND SHALL HAVE BEEN DELIVERED TO AND RECEIVED IN THE DIVISION ENGINEER'S OFFICE AT 2612 North Duke Street Durham, NC 27704 BY 2:00 p.m., on Wednesday, June 12, 2013.**
12. The sealed bid must display the following statement on the front of the sealed envelope:

> **Quotation for SS-4905BF in Wake County to be opened at 2:00 p.m., on Wednesday, June 12, 2013.**

13. If delivered by mail, the sealed envelope shall be placed in another sealed envelope and the outer envelope shall be addressed as follows:

North Carolina Department Of Transportation
ATTENTION: Michael J. Kneis, PE
2612 North Duke Street
Durham, NC 27704

AWARD OF CONTRACT

The award of the contract, if it be awarded, will be made to the lowest responsible Bidder in accordance with Section 102 (excluding 102-10) of the <u>Standard Specifications for Roads and Structures 2012</u>. The lowest responsible Bidder will be notified that his bid has been accepted and that he has been awarded the contract. NCDOT reserves the right to reject all bids.

STANDARD PROVISIONS

GENERAL

This contract is for roadway improvements at the intersection of US 401 and SR 1375 (Simpkins Road). The Contractor will be responsible for grading, paving, installing a concrete island, drainage, signals and thermoplastic markings. The Contractor will also be responsible for providing work zone traffic control and erosion control.

All work and materials shall be in accordance with the provisions of the General Guidelines of this contract, the Project Special Provisions, the North Carolina Department of Transportation Standard Specifications for Roads and Structures 2012, the North Carolina Department of Transportation 2012 Roadway Standard Drawings, and the current edition of the Manual of Uniform Traffic Control Devices (MUTCD), with the exception that bid bonds are *not* required.

The Contractor shall keep himself fully informed of all Federal, State and local laws, ordinances, and regulations, and shall comply with the provisions of Section 107 of the Standard Specifications.

CONTRACT TIME AND LIQUIDATED DAMAGES

(7-1-95) (Rev. 12-18-07) 108 SP1 G05 B

The date of availability for this contract is the date the Contractor begins work but not before **July 8, 2013** or later than **August 5, 2013.**

The completion date for this contract is the date that is **Thirty (30)** consecutive calendar days after and including the date of availability.

Except where otherwise provided by the contract, observation periods required by the contract will not be a part of the work to be completed by the completion date and/or intermediate contract times stated in the contract. The acceptable completion of the observation periods that extend beyond the final completion date shall be a part of the work covered by the performance and payment bonds.

The liquidated damages for this contract are **Three Hundred Fifty Dollars ($350.00)** per calendar day. At the preconstruction conference the Contractor shall declare his expected date for beginning work. Should the Contractor desire to revise this date after the preconstruction conference, he shall notify the Engineer in writing at least fourteen (14) days prior to the revised date.

INTERMEDIATE CONTRACT TIME NUMBER 1 AND LIQUIDATED DAMAGES

(2-20-07) RG 14 A

The Contractor shall complete the required work of installing, maintaining, and removing the traffic control devices for lane closures and restoring traffic to the existing traffic pattern. The Contractor shall not close or narrow a lane of traffic on **US 401 and SR 1375 for operations involving a lane closure duration of 2 hours or less** during the following time restrictions:

DAY AND TIME RESTRICTIONS

Monday through Friday from 7:00 a.m. to 9:00 a.m.
Monday through Friday from 4:00 p.m. to 6:00 p.m.

In addition, the Contractor shall not close or narrow a lane of traffic on **US 401 and SR 1375** detain and/or alter the traffic flow on or during holidays, holiday weekends, special events, or any other time when traffic is unusually heavy, including the following schedules:

HOLIDAY AND HOLIDAY WEEKEND LANE CLOSURE RESTRICTIONS

1. For **unexpected occurrences** that create unusually high traffic volumes, as directed by the Engineer.

2. For **New Year's Day**, between the hours of **4:00 p.m.** December 31st and **9:00 a.m.** January 2nd. If New Year's Day is on a Friday, Saturday, Sunday or Monday, then until **9:00 p.m.** the following Tuesday.

3. For **Easter**, between the hours of **4:00 p.m.** Thursday and **9:00 a.m.** Monday.

4. For **Memorial Day**, between the hours of **4:00 p.m.** Friday and **9:00 a.m.** Tuesday.

5. For **Independence Day**, between the hours of **4:00 p.m.** the day before Independence Day and **9:00 a.m.** the day after Independence Day.

   If **Independence Day** is on a Friday, Saturday, Sunday or Monday, then between the hours of **4:00 p.m.** the Thursday before Independence Day and **9:00 a.m.** the Tuesday after Independence Day.

6. For **Labor Day**, between the hours of **4:00 p.m.** Friday and **9:00 a.m.** Tuesday.

7. For **Thanksgiving Day**, between the hours of **4:00 p.m.** Tuesday and **9:00 a.m.** Monday.

8. For **Christmas**, between the hours of **4:00 p.m.** the Friday before the week of Christmas Day and **9:00 a.m.** the following Tuesday after the week of Christmas Day.

Holidays and holiday weekends shall include New Year's, Easter, Memorial Day, Independence Day, Labor Day, Thanksgiving, and Christmas. The Contractor shall schedule his work so that lane closures will not be required during these periods, unless otherwise directed by the Engineer.

The time of availability for this intermediate contract work shall be the time the Contractor begins to install all traffic control devices for lane closures according to the time restrictions listed herein.

The completion time for this intermediate contract work shall be the time the Contractor is required to complete the removal of all traffic control devices for lane closures according to the time restrictions stated above and place traffic in the existing traffic pattern.

The liquidated damages are **Two Hundred Fifty Dollars ($250.00) per fifteen (15) minutes**.

INTERMEDIATE CONTRACT TIME NUMBER 2 AND LIQUIDATED DAMAGES

(2-20-07) RG 14 D

The Contractor shall complete the work required in areas as shown on Sheet **TMP-3** and of installing, maintaining, and removing the traffic control devices for closures and restoring traffic to the existing traffic pattern. The Contractor shall not close or narrow a lane of traffic on **US 401** during the following time restrictions:

DAY AND TIME RESTRICTIONS

Monday through Saturday from 7:00 a.m. to 9:00 p.m.

The Contractor shall complete the work required in areas as shown on Sheet **TMP-3** and of installing, maintaining, and removing the traffic control devices for closures and restoring traffic to the existing traffic pattern. The Contractor shall not close or narrow a lane of traffic on **SR 1375** during the following time restrictions:

DAY AND TIME RESTRICTIONS

Monday through Saturday from 7:00 a.m. to 6:00 p.m.

The time of availability for this intermediate contract time will be the time the Contractor begins to install traffic control devices required for road closures according to the time restrictions stated herein.

The completion time for this intermediate contract time will be the time the Contractor is required to complete the removal of traffic control devices required for the road closures according to the time restrictions stated herein and restore traffic to the existing traffic pattern.

The liquidated damages are **Two Hundred Fifty Dollars ($250.00) per fifteen (15) minutes**.

AUTHORITY OF THE ENGINEER

The Engineer for this project shall be the Division Engineer, Division 5, Division of Highways, North Carolina Department of Transportation, acting directly or through his duly authorized representatives.

The Engineer will decide all questions which may arise as to the quality and acceptability of work performed and as to the rate of progress of the work; all questions which may arise as to the interpretation of the contract; and all questions as to the acceptable fulfillment of the contract on the part of the Contractor. His decision shall be final and he shall have executive authority to enforce and make effective such decisions and orders as the Contractor fails to carry out promptly.

BIDS

In accordance with GS 136-28.1(b), if the total bid amount of the contract exceeds $1.2 million, the bid will not be considered for award.

AVAILABILITY OF FUNDS – TERMINATION OF CONTRACTS

(5-20-08) Z-2

General Statute 143C-6-11. (h) Highway Appropriation is hereby incorporated verbatim in this contract as follows:

(h) Amounts Encumbered. – Transportation project appropriations may be encumbered in the amount of allotments made to the Department of Transportation by the Director for the estimated payments for transportation project contract work to be performed in the appropriation fiscal year. The allotments shall be multiyear allotments and shall be based on estimated revenues and shall be subject to the maximum contract authority contained in *General Statute 143C-6-11(c).* Payment for transportation project work performed pursuant to contract in any fiscal year other than the current fiscal year is subject to appropriations by the General Assembly. Transportation project contracts shall contain a schedule of estimated completion progress, and any acceleration of this progress shall be subject to the approval of the Department of Transportation provided funds are available. The State reserves the right to terminate or suspend any transportation project contract, and any transportation project contract shall be so terminated or suspended if funds will not be available for payment of the work to be performed during that fiscal year pursuant to the contract. In the event of termination of any contract, the contractor shall be given a written notice of termination at least 60 days before completion of scheduled work for which funds are available. In the event of termination, the contractor shall be paid for the work already performed in accordance with the contract specifications.

Payment will be made on any contract terminated pursuant to the special provision in accordance with Subarticle 108-13(E) of the *2012 Standard Specifications*.

PROSECUTION AND PROGRESS

The Contractor shall pursue the work diligently with workmen in sufficient numbers, abilities, and supervision, and with equipment, materials, and methods of construction as may be required to complete the work described in the contract by the completion date and in accordance with Section 108 of the Standard Specifications.

MATERIALS AND TESTING

The Engineer reserves the right to perform all sampling and testing in accordance with Section 106 of the Standard Specifications and the Department's "Materials and Test Manual." However, the Engineer may reduce the frequency of sampling and testing where he deems it appropriate for the project under construction.

The Contractor shall furnish the applicable certifications and documentation for all materials as required by the Standard Specifications. Material which is not properly certified will not be accepted.

TRAFFIC CONTROL AND WORK ZONE SAFETY

The Contractor shall maintain traffic during construction and provide, install, and maintain all traffic control devices in accordance with these project guidelines, the Project Traffic Control Plans, the Project Special Provisions, North Carolina Department of Transportation Standard Specifications for Roads and Structures 2012, and the current edition of the Manual of Uniform Traffic Control Devices (MUTCD).

The Contractor shall utilize complete and proper traffic controls and traffic control devices during all operations. All traffic control and traffic control devices required for any operation shall be functional and in place prior to the commencement of that operation. Signs for temporary operations shall be removed during periods of inactivity. The Contractor is required to leave the project in a manner that will be safe to the traveling public and which will not impede motorists.

Traffic movements through lane closures on roads with two way traffic shall be controlled by flaggers stationed at each end of the work zone. In situations where sight distance is limited, the Contractor shall provide additional means of controlling traffic, including, but not limited to, two-way radios, pilot vehicles, or additional flaggers. Flaggers shall be competent personnel, adequately trained in flagging procedures, and furnished with proper safety devices and equipment, including, but not limited to, safety vests and stop/slow paddles.

All personnel when working in traffic areas or areas in close proximity to traffic shall wear an approved safety vest, or shirt or jacket which meets the color requirements of the Manual of Uniform Traffic Control Devices (MUTCD).

Provide appropriate lighting in accordance with Section 1413 of the *2012 Standard Specifications*.

The Contractor shall comply with all applicable Federal, State, and local laws, ordinances, and regulations governing safety, health, and sanitation, and shall provide all safeguards, safety devices, and protective equipment, and shall take any other needed actions, on his own responsibility that are reasonably necessary to protect the life and health of employees on the job and the safety of the public, and to protect property in connection with the performance of the work covered by the contract.

Failure to comply with any of the requirements for safety and traffic control of this contract shall result in suspension of work as provided in Subarticle 108-7(2) of the Standard Specifications.

The Contractor's vehicles and equipment shall not be parked within the State Highway System right of way overnight or at other times when work has been suspended unless approved by the Engineer, and in no case within 30 feet of the edge of pavement. The Engineer may designate specific locations for parking equipment.

Payment will be made for the signing and traffic control item(s) that have been included in the contract. No direct payment will be made for providing other signing and traffic control item(s), as the cost of same will be considered incidental to the work being paid for under those various signing and traffic control item(s) that have been included. This shall include flagging and use of off duty police officers, if needed.

SAFETY VESTS

All Contractors' personnel, all subcontractors and their personnel, and any material suppliers and their personnel must wear an OSHA approved reflective vest or outer garment at all times while on the project.

SUPERVISION BY CONTRACTOR

At all times during the life of the project the Contractor shall provide one permanent employee who shall have the authority and capability for overall responsibility of the project and who shall be personally available at the work site within 24 hours notice. Such employee shall be fully authorized to conduct all business with the subcontractors, to negotiate and execute all supplemental agreements, and to execute the orders or directions of the Engineer.

At all times that work is actually being performed, the Contractor shall have present on the project one competent individual who is authorized to act in a supervisory capacity over all work on the project, including work subcontracted. The individual who has been so authorized shall be experienced in the type of work being performed and shall be fully capable of managing, directing, and coordinating the work; of reading and thoroughly understanding the contract; and receiving and carrying out directions from the Engineer or his authorized representatives. He shall be an employee of the Contractor unless otherwise approved by the Engineer.

The Contractor may, at his option, designate one employee to meet the requirements of both positions. However, whenever the designated employee is absent from the work site, an authorized individual qualified to act in a supervisory capacity on the project shall be present.

WORK SITE CLEANUP

The Contractor shall the clean the work sites of all debris, excess excavations, waste packing material, scraps, etc. At the end of each work day the site shall be clear and clean. The Contractor shall not throw any waste material in any storm sewers or streams. All disturbed areas of vegetation shall be graded, seeded and mulched as required in the Standard Specifications for Roads and Structures 2012. The Contractor shall be responsible for damage to private and/or public property resulting from the work.

CONTRACT PAYMENT AND PERFORMANCE BOND

A performance bond in the amount of one hundred percent (100%) of the contract amount, conditioned upon the faithful performance of the contract in accordance with specifications and conditions of the contract is required for contracts of **$500,000** or more. Such bond shall be solely for the protection of the North Carolina Department of Transportation and the State of North Carolina.

A payment bond in the amount of one hundred percent (100%) of the contract amount, conditioned upon the prompt payment for all labor or materials for which the Contractor, or his subcontractors, are liable is required for Construction contracts greater than **$500,000**. The payment bond shall be solely for the protection of persons or firms furnishing materials or performing labor for this contract for which the Contractor is liable.

The successful bidder, within fourteen (14) days after notice of award, shall provide the Department with a contract payment bond and a contract performance bond each in an amount equal to 100 percent of the amount of the contract.

LIABILITY INSURANCE

The Contractor shall provide liability insurance conforming to the requirements of Article of 107-15 of the Standard Specifications.

Upon execution of the contract, provide evidence of the above insurance requirements to the Engineer.

WORKERS' COMPENSATION INSURANCE

Pursuant to N.C.G.S. § 97-19, all contractors of the Department of Transportation are required, prior to beginning services, to show proof of coverage issued by a workers' compensation insurance carrier, or a certificate of compliance issued by the Department of Insurance for self-insured subcontractors stating that it has complied with N.C.G.S. § 97-93 irrespective of whether subcontractors have regularly in service fewer than three employees in the same business within the State of North Carolina, and subcontractors shall be hereinafter liable under the Workers' Compensation Act for payment of compensation and other benefits to its employees for any injury or death due to an accident arising out of and in the course of performance of the work insured by the subcontractor.

BANKRUPTCY

The Department of Transportation, at its option, may terminate the contract upon filing by the Contractor of any petition for protection under the provisions of the Federal Bankruptcy Act.

SUBLETTING OF CONTRACT

The Contractor shall not sublet, sell, transfer, assign or otherwise dispose of this contract or any portion thereof; or his right, title, or interest therein; without written consent of the Engineer. Subletting of this contract or any portion of the contract shall conform to the requirements of Article of 108-6 of the Standard Specifications.

DEBARMENT STATEMENT

The Contractor certifies and understands that by his/her signature on the Bid Form that he/she and the contracting firm he/she represents has not been banned, debarred, suspended, proposed for debarment, or declared ineligible for the award of contracts by any Federal agency.

DEFAULT OF CONTRACT

The Department of Transportation shall have the right to declare a default of contract for breach by the Contractor of any material term or condition of the contract. Default of contract shall be in accordance with the terms, conditions, and procedures of Article 108-9 of the Standard Specifications.

CONTRACTOR CLAIM SUBMITTAL FORM

If the Contractor elects to file a written claim or requests an extension of contract time, it shall be submitted on the *Contractor Claim Submittal Form (CCSF)* available through the Construction Unit or http://ncdot.org/doh/operations/dp_chief_eng/constructionunit/forms/ccsf-1.pdf

Any claims for additional compensation and/or extensions of the completion date shall be submitted to the Division Engineer in writing, with detailed justification, **prior** to submitting the final invoice payment. Once an invoice is received and accepted that is marked as "Final", the Contractor shall be barred from recovery.

PROMPT PAYMENT

Prompt Payment of Monies Due Subcontractors, Second Tier Subcontractors and Material Suppliers

Contractors at all levels, prime, subcontractor, or second tier contractor, shall within seven calendar days of receipt of monies, resulting from work performed on the project or services rendered, pay subcontractors, second tier subcontractors, or material suppliers, as appropriate. This seven-day period begins upon knowledgeable receipt by the contracting firm obligated to make a subsequent periodic payment or final payment. These prompt payment requirements will be met if each firm mails the payment to the next level firm by evidence of postmark within the seven-day period.
This provision for prompt payment shall be incorporated into each subcontract or second tier subcontract issued for work performed on the project or for services provided. Failure of any entity to make prompt payment as defined herein may result in (1) withholding of money due to that entity in the next partial payment until such assurances are made satisfactory to this provision; or (2) removal of an approved contractor from the pre-qualified bidders list or the removal of other entities from the approved subcontractors list.

PAYMENT AND RETAINAGE

The Contractor may submit requests for partial payments on a monthly basis, or other interval as approved by the Engineer. Compensation for all pay items shall be in accordance with the Standard Specifications. The amount of partial payments will be based on the work accomplished and accepted by the last day of the approved pay period.

Requests for payment shall be made by Contractor's Invoice. All invoice items and unit costs shall correspond to contract pay items. In the event of error or discrepancy in items or unit costs, the Department may return the invoice to the contractor for correction. The invoice shall be completely and legibly filled out with all appropriate information and shall be signed by an authorized representative of the Contractor.

All requests for payment shall be submitted to the Resident Engineer's office.

Due to the nature of the contract, no retainage will be withheld. However, the Department reserves the right to withhold payment for a specific location until after successful completion of the work as verified by the final inspection of that location.

UTILITY CONFLICTS

It shall be the responsibility of the Contractor to contact all affected utility owners and determine the precise locations of all utilities prior to beginning construction. Utility owners shall be contacted a minimum of 48 hours prior to the commencement of operations. Special care shall be used in working around or near existing utilities, protecting them when necessary to provide uninterrupted service. In the event that any utility service is interrupted, the Contractor shall notify the utility owner immediately and shall cooperate with the owner, or his representative, in the restoration of service in the shortest time possible.

The Contractor shall adhere to all applicable regulations and follow accepted safety procedures when working in the vicinity of utilities in order to ensure the safety of construction personnel and the public.

The Contractor will not be responsible for the adjustment of any conflicting utilities at the bridge site prior to the date of availability.

SAFETY AND ACCIDENT PROTECTION

In accordance with Article 107-21 of the Standard Specifications, the Contractor shall comply with all applicable Federal, State, and local laws, ordinances, and regulations governing safety, health, and sanitation, and shall provide all safeguards, safety devices, and protective equipment, and shall take any other needed actions, on his own

responsibility that are reasonably necessary to protect the life and health of employees on the job and the safety of the public, and to protect property in connection with the performance of the work covered by the contract.

PLAN, DETAIL AND QUANTITY ADJUSTMENTS

The Department reserves the right to make, at any time during the progress of the work, such alterations in plans or the details of construction as may be found necessary or desirable by the Engineer to complete the project.

CONTRACTOR'S LICENSE REQUIREMENTS

(7-1-95) 102-14 SP1 G88

If the successful bidder does not hold the proper license to perform any plumbing, heating, air conditioning, or electrical work in this contract, he will be required to sublet such work to a contractor properly licensed in accordance with *Article 2 of Chapter 87 of the General Statutes* (licensing of heating, plumbing, and air conditioning contractors) and *Article 4 of Chapter 87* of the *General Statutes* (licensing of electrical contractors).

LOCATING EXISTING UNDERGROUND UTILITIES

(3-20-12) 105 SP1 G115

Revise the *2012 Standard Specifications* as follows:

Page 1-43, Article 105-8, line 28, after the first sentence, add the following:

Identify excavation locations by means of pre-marking with white paint, flags, or stakes or provide a specific written description of the location in the locate request.

RESOURCE CONSERVATION

(5-21-13) 104-13 SP1 G118

In accordance with North Carolina Executive Order 156, NCGS 130A-309.14(2), and NCGS 136-28.8, it is the policy of the Department to aid in the reduction of materials that become a part of our solid waste stream, to divert materials from landfills, and to find ways to recycle and reuse materials for the benefit of the Citizens of North Carolina.

Initiate, develop and use products and construction methods that incorporate the use of recycled or solid waste products in accordance with Article 104-13 of the *2012 Standard Specifications*. Report the quantities of reused or recycled materials either incorporated in the project or diverted from landfills on the Project Construction Reuse and Recycling Reporting Form.

A location-based tool for finding local recycling facilities and the Project Construction Reuse and Recycling Reporting Form are available at:

http://connect.ncdot.gov/resources/Environmental/Pages/North-Carolina-Recycling-Locations.aspx

DOMESTIC STEEL

(4-16-13) 106 SP1 G120

Revise the *2012 Standard Specifications* as follows:

P**age 1-49, Subarticle 106-1(B) Domestic Steel, lines 2-7,** replace the first paragraph with the following:

All steel and iron products that are permanently incorporated into this project shall be produced in the United States except minimal amounts of foreign steel and iron products may be used provided the combined material cost of the items involved does not exceed 0.1% of the total amount bid for the entire project or $2,500, whichever is greater. If invoices showing the cost of the material are not provided, the amount of the bid item involving the foreign material will be used for calculations. This minimal amount of foreign produced steel and iron products permitted for use is not applicable to high strength fasteners. Domestically produced high strength fasteners are required.

GIFTS FROM VENDORS AND CONTRACTORS

(12-15-09) SP1 G152

By Executive Order 24, issued by Governor Perdue, and *N.C. G.S.§ 133-32*, it is unlawful for any vendor or contractor (i.e. architect, bidder, contractor, construction manager, design professional, engineer, landlord, offeror, seller, subcontractor, supplier, or vendor), to make gifts or to give favors to any State employee of the Governor's Cabinet Agencies (i.e. Administration, Commerce, Correction, Crime Control and Public Safety, Cultural Resources, Environment and Natural Resources, Health and Human Services, Juvenile Justice and Delinquency Prevention, Revenue, Transportation, and the Office of the Governor). This prohibition covers those vendors and contractors who:

(1) have a contract with a governmental agency; or
(2) have performed under such a contract within the past year; or
(3) anticipate bidding on such a contract in the future.

For additional information regarding the specific requirements and exemptions, vendors and contractors are encouraged to review Executive Order 24 and *G.S. § 133-32*.

Executive Order 24 also encouraged and invited other State Agencies to implement the requirements and prohibitions of the Executive Order to their agencies. Vendors and contractors should contact other State Agencies to determine if those agencies have adopted Executive Order 24.

EROSION AND SEDIMENT CONTROL/STORMWATER CERTIFICATION

(1-16-07) (Rev 9-18-12) 105-16, 225-2, 16 SP1 G180

General

Schedule and conduct construction activities in a manner that will minimize soil erosion and the resulting sedimentation and turbidity of surface waters. Comply with the requirements herein regardless of whether or not a National Pollution discharge Elimination System (NPDES) permit for the work is required.

Establish a chain of responsibility for operations and subcontractors' operations to ensure that the *Erosion and Sediment Control/Stormwater Pollution Prevention Plan* is implemented and maintained over the life of the contract.

(A) *Certified Supervisor* - Provide a certified Erosion and Sediment Control/Stormwater Supervisor to manage the Contractor and subcontractor operations, insure compliance with Federal, State and Local ordinances and regulations, and manage the Quality Control Program.

(B) *Certified Foreman* - Provide a certified, trained foreman for each construction operation that increases the potential for soil erosion or the possible sedimentation and turbidity of surface waters.

(C) *Certified Installer* - Provide a certified installer to install or direct the installation for erosion or sediment/stormwater control practices.

(D) *Certified Designer* - Provide a certified designer for the design of the erosion and sediment control/stormwater component of reclamation plans and, if applicable, for the design of the project erosion and sediment control/stormwater plan.

Roles and Responsibilities

(A) *Certified Erosion and Sediment Control/Stormwater Supervisor* - The Certified Supervisor shall be Level II and responsible for ensuring the erosion and sediment control/stormwater plan is adequately implemented and maintained on the project and for conducting the quality control program. The Certified Supervisor shall be on the project within 24 hours notice from initial exposure of an erodible surface to the project's final acceptance. Perform the following duties:

(1) Manage Operations - Coordinate and schedule the work of subcontractors so that erosion and sediment control/stormwater measures are fully executed for each operation and in a timely manner over the duration of the contract.

(a) Oversee the work of subcontractors so that appropriate erosion and sediment control/stormwater preventive measures are conformed to at each stage of the work.
(b) Prepare the required National Pollutant Discharge Elimination System (NPDES) Inspection Record and submit to the Engineer.
(c) Attend all weekly or monthly construction meetings to discuss the findings of the NPDES inspection and other related issues.
(d) Implement the erosion and sediment control/stormwater site plans requested.
(e) Provide any needed erosion and sediment control/stormwater practices for the Contractor's temporary work not shown on the plans, such as, but not limited to work platforms, temporary construction, pumping operations, plant and storage yards, and cofferdams.
(f) Acquire applicable permits and comply with requirements for borrow pits, dewatering, and any temporary work conducted by the Contractor in jurisdictional areas.
(g) Conduct all erosion and sediment control/stormwater work in a timely and workmanlike manner.
(h) Fully perform and install erosion and sediment control/stormwater work prior to any suspension of the work.
(i) Coordinate with Department, Federal, State and Local Regulatory agencies on resolution of erosion and sediment control/stormwater issues due to the Contractor's operations.
(j) Ensure that proper cleanup occurs from vehicle tracking on paved surfaces or any location where sediment leaves the Right-of-Way.
(k) Have available a set of erosion and sediment control/stormwater plans that are initialed and include the installation date of Best Management Practices. These practices shall include temporary and permanent groundcover and be properly updated to reflect necessary plan and field changes for use and review by Department personnel as well as regulatory agencies.

(2) Requirements set forth under the NPDES Permit - The Department's NPDES Stormwater permit (NCS000250) outlines certain objectives and management measures pertaining to construction activities. The permit references *NCG010000, General Permit to Discharge Stormwater* under the NPDES, and states that the Department shall incorporate the applicable requirements into its delegated Erosion and Sediment Control Program for construction activities disturbing one or more acres of land. The Department further incorporates these requirements on all contracted bridge and culvert work at jurisdictional waters, regardless of size. Some of the requirements are, but are not limited to:

(a) Control project site waste to prevent contamination of surface or ground waters of the state, i.e. from equipment operation/maintenance, construction materials, concrete washout, chemicals, litter, fuels, lubricants, coolants, hydraulic fluids, any other petroleum products, and sanitary waste.
(b) Inspect erosion and sediment control/stormwater devices and stormwater discharge outfalls at least once every 7 calendar days, twice weekly for construction related *Federal Clean Water Act, Section 303(d)* impaired streams with turbidity violations, and within 24 hours after a significant rainfall event of 0.5 inch that occurs within a 24 hour period.
(c) Maintain an onsite rain gauge or use the Department's Multi-Sensor Precipitation Estimate website to maintain a daily record of rainfall amounts and dates.
(d) Maintain erosion and sediment control/stormwater inspection records for review by Department and Regulatory personnel upon request.
(e) Implement approved reclamation plans on all borrow pits, waste sites and staging areas.
(f) Maintain a log of turbidity test results as outlined in the Department's Procedure for Monitoring Borrow Pit Discharge.
(g) Provide secondary containment for bulk storage of liquid materials.
(h) Provide training for employees concerning general erosion and sediment control/stormwater awareness, the Department's NPDES Stormwater Permit NCS000250 requirements, and the applicable requirements of the *General Permit, NCG010000*.

(i) Report violations of the NPDES permit to the Engineer immediately who will notify the Division of Water Quality Regional Office within 24 hours of becoming aware of the violation.

(3) Quality Control Program - Maintain a quality control program to control erosion, prevent sedimentation and follow provisions/conditions of permits. The quality control program shall:

(a) Follow permit requirements related to the Contractor and subcontractors' construction activities.
(b) Ensure that all operators and subcontractors on site have the proper erosion and sediment control/stormwater certification.
(c) Notify the Engineer when the required certified erosion and sediment control/stormwater personnel are not available on the job site when needed.
(d) Conduct the inspections required by the NPDES permit.
(e) Take corrective actions in the proper timeframe as required by the NPDES permit for problem areas identified during the NPDES inspections.
(f) Incorporate erosion control into the work in a timely manner and stabilize disturbed areas with mulch/seed or vegetative cover on a section-by-section basis.
(g) Use flocculants approved by state regulatory authorities where appropriate and where required for turbidity and sedimentation reduction.
(h) Ensure proper installation and maintenance of temporary erosion and sediment control devices.
(i) Remove temporary erosion or sediment control devices when they are no longer necessary as agreed upon by the Engineer.
(j) The Contractor's quality control and inspection procedures shall be subject to review by the Engineer. Maintain NPDES inspection records and make records available at all times for verification by the Engineer.

(B) *Certified Foreman* - At least one Certified Foreman shall be onsite for each type of work listed herein during the respective construction activities to control erosion, prevent sedimentation and follow permit provisions:

(1) Foreman in charge of grading activities
(2) Foreman in charge of bridge or culvert construction over jurisdictional areas
(3) Foreman in charge of utility activities

The Contractor may request to use the same person as the Level II Supervisor and Level II Foreman. This person shall be onsite whenever construction activities as described above are taking place. This request shall be approved by the Engineer prior to work beginning.

The Contractor may request to name a single Level II Foreman to oversee multiple construction activities on small bridge or culvert replacement projects. This request shall be approved by the Engineer prior to work beginning.

(C) *Certified Installers* - Provide at least one onsite, Level I Certified Installer for each of the following erosion and sediment control/stormwater crew:

(1) Seeding and Mulching
(2) Temporary Seeding
(3) Temporary Mulching
(4) Sodding
(5) Silt fence or other perimeter erosion/sediment control device installations
(6) Erosion control blanket installation
(7) Hydraulic tackifier installation
(8) Turbidity curtain installation
(9) Rock ditch check/sediment dam installation
(10) Ditch liner/matting installation
(11) Inlet protection
(12) Riprap placement

(13) Stormwater BMP installations (such as but not limited to level spreaders, retention/detention devices)
(14) Pipe installations within jurisdictional areas

If a Level I *Certified Installer* is not onsite, the Contractor may substitute a Level II Foreman for a Level I Installer, provided the Level II Foreman is not tasked to another crew requiring Level II Foreman oversight.

(D) *Certified Designer* - Include the certification number of the Level III-B Certified Designer on the erosion and sediment control/stormwater component of all reclamation plans and if applicable, the certification number of the Level III-A Certified Designer on the design of the project erosion and sediment control/stormwater plan.

Preconstruction Meeting

Furnish the names of the *Certified Erosion and Sediment Control/Stormwater Supervisor, Certified Foremen, Certified Installers* and *Certified Designer* and notify the Engineer of changes in certified personnel over the life of the contract within 2 days of change.

Ethical Responsibility

Any company performing work for the North Carolina Department of Transportation has the ethical responsibility to fully disclose any reprimand or dismissal of an employee resulting from improper testing or falsification of records.

Revocation or Suspension of Certification

Upon recommendation of the Chief Engineer to the certification entity, certification for *Supervisor, Certified Foremen, Certified Installers* and *Certified Designer* may be revoked or suspended with the issuance of an *Immediate Corrective Action (ICA), Notice of Violation (NOV),* or C*ease and Desist Order* for erosion and sediment control/stormwater related issues.

The Chief Engineer may recommend suspension or permanent revocation of certification due to the following:

(A) Failure to adequately perform the duties as defined within this certification provision.
(B) Issuance of an ICA, NOV, or Cease and Desist Order.
(C) Failure to fully perform environmental commitments as detailed within the permit conditions and specifications.
(D) Demonstration of erroneous documentation or reporting techniques.
(E) Cheating or copying another candidate's work on an examination.
(F) Intentional falsification of records.
(G) Directing a subordinate under direct or indirect supervision to perform any of the above actions.
(H) Dismissal from a company for any of the above reasons.
(I) Suspension or revocation of one's certification by another entity.

Suspension or revocation of a certification will be sent by certified mail to the certificant and the Corporate Head of the company that employs the certificant.

A certificant has the right to appeal any adverse action which results in suspension or permanent revocation of certification by responding, in writing, to the Chief Engineer within 10 calendar days after receiving notice of the proposed adverse action.

Chief Engineer
1536 Mail Service Center
Raleigh, NC 27699-1536

Failure to appeal within 10 calendar days will result in the proposed adverse action becoming effective on the date specified on the certified notice. Failure to appeal within the time specified will result in a waiver of all future appeal rights regarding the adverse action taken. The certificant will not be allowed to perform duties associated with the certification during the appeal process.

The Chief Engineer will hear the appeal and make a decision within 7 days of hearing the appeal. Decision of the Chief Engineer will be final and will be made in writing to the certificant.

If a certification is temporarily suspended, the certificant shall pass any applicable written examination and any proficiency examination, at the conclusion of the specified suspension period, prior to having the certification reinstated.

Measurement and Payment

Certified Erosion and Sediment Control/Stormwater Supervisor, Certified Foremen, Certified Installers and *Certified Designer* will be incidental to the project for which no direct compensation will be made.

PROCEDURE FOR MONITORING BORROW PIT DISCHARGE

(2-20-07) (Rev. 3-20-13) 105-16, 230, 801 SP1 G181

Water discharge from borrow pit sites shall not cause surface waters to exceed 50 NTUs (nephelometric turbidity unit) in streams not designated as trout waters and 10 NTUs in streams, lakes or reservoirs designated as trout waters. For lakes and reservoirs not designated as trout waters, the turbidity shall not exceed 25 NTUs. If the turbidity exceeds these levels due to natural background conditions, the existing turbidity level shall not be increased.

If during any operating day, the downstream water quality exceeds the standard, the Contractor shall do all of the following:

(A) Either cease discharge or modify the discharge volume or turbidity levels to bring the downstream turbidity levels into compliance, or

(B) Evaluate the upstream conditions to determine if the exceedance of the standard is due to natural background conditions. If the background turbidity measurements exceed the standard, operation of the pit and discharge can continue as long as the stream turbidity levels are not increased due to the discharge.

(C) Measure and record the turbidity test results (time, date and sampler) at all defined sampling locations 30 minutes after startup and at a minimum, one additional sampling of all sampling locations during that 24-hour period in which the borrow pit is discharging.

(D) Notify DWQ within 24 hours of any stream turbidity standard exceedances that are not brought into compliance.

During the Environmental Assessment required by Article 230-4 of the *2012 Standard Specifications*, the Contractor shall define the point at which the discharge enters into the State's surface waters and the appropriate sampling locations. Sampling locations shall include points upstream and downstream from the point at which the discharge enters these waters. Upstream sampling location shall be located so that it is not influenced by backwater conditions and represents natural background conditions. Downstream sampling location shall be located at the point where complete mixing of the discharge and receiving water has occurred.

The discharge shall be closely monitored when water from the dewatering activities is introduced into jurisdictional wetlands. Any time visible sedimentation (deposition of sediment) on the wetland surface is observed, the dewatering activity will be suspended until turbidity levels in the stilling basin can be reduced to a level where sediment deposition does not occur. Staining of wetland surfaces from suspended clay particles, occurring after evaporation or infiltration, does not constitute sedimentation. No activities shall occur in wetlands that adversely affect the functioning of a wetland. Visible sedimentation will be considered an indication of possible adverse impacts on wetland use.

The Engineer will perform independent turbidity tests on a random basis. These results will be maintained in a log within the project records. Records will include, at a minimum, turbidity test results, time, date and name of sampler. Should the Department's test results exceed those of the Contractor's test results, an immediate test shall be performed jointly with the results superseding the previous test results of both the Department and the Contractor.

The Contractor shall use the *NCDOT Turbidity Reduction Options for Borrow Pits Matrix*, available at http://www.ncdot.gov/doh/operations/dp_chief_eng/roadside/fieldops/downloads/Files/TurbidityReductionOptionSheet.pdf to plan, design, construct, and maintain BMPs to address water quality standards. Tier I Methods include stilling basins which are standard compensatory BMPs. Other Tier I methods are noncompensatory and shall be used when needed to meet the stream turbidity standards. Tier II Methods are also noncompensatory and are options that may be needed for protection of rare or unique resources or where special environmental conditions exist at the site which have led to additional requirements being placed in the DWQ's 401 Certifications and approval letters, Isolated Wetland Permits, Riparian Buffer Authorization or a DOT Reclamation Plan's Environmental Assessment for the specific site. Should the Contractor exhaust all Tier I Methods on a site exclusive of rare or unique resources or special environmental conditions, Tier II Methods may be required by regulators on a case by case basis per supplemental agreement.

The Contractor may use cation exchange capacity (CEC) values from proposed site borings to plan and develop the bid for the project. CEC values exceeding 15 milliequivalents per 100 grams of soil may indicate a high potential for turbidity and should be avoided when dewatering into surface water is proposed.

No additional compensation for monitoring borrow pit discharge will be paid.

EMPLOYMENT

(11-15-11) (Rev. 1-17-12) 108, 102 SP1 G184

Revise the *2012 Standard Specifications* as follows:

Page 1-20, Subarticle 102-15(O), delete and replace with the following:

(O) Failure to restrict a former Department employee as prohibited by Article 108-5.

Page 1-65, Article 108-5 Character of Workmen, Methods, and Equipment, line 32, delete all of line 32, the first sentence of the second paragraph and the first word of the second sentence of the second paragraph.

STATE HIGHWAY ADMINISTRATOR TITLE CHANGE

(9-18-12) SP1 G185

Revise the 2012 Standard Specifications as follows:

Replace all references to "State Highway Administrator" with "Chief Engineer".

Revise the *2012 Standard Specifications* as follows:

Page 10-1, Article 1000-1, DESCRIPTION, line 14, add the following:

Use materials which do not produce a mottled appearance through rusting or other staining of the finished concrete surface.

Page 10-5, Table 1000-1, REQUIREMENTS FOR CONCRETE, replace with the following:

TABLE 1000-1
REQUIREMENTS FOR CONCRETE

Class of Concrete	Min. Comp. Strength at 28 days	Maximum Water-Cement Ratio				Consistency Max. Slump		Cement Content			
		Air-Entrained Concrete		Non Air-Entrained Concrete		Vibrated	Non-Vibrated	Vibrated		Non- Vibrated	
		Rounded Aggregate	Angular Aggre-gate	Rounded Aggregate	Angular Aggre-gate			Min.	Max.	Min.	Max.
Units	*psi*					*inch*	*inch*	*lb/cy*	*lb/cy*	*lb/cy*	*lb/cy*
AA	4,500	0.381	0.426	-	-	3.5	-	639	715	-	-
AA Slip Form	4,500	0.381	0.426	-	-	1.5	-	639	715	-	-
Drilled Pier	4,500	-	-	0.450	0.450	-	5-7 dry 7-9 wet	-	-	640	800
A	3,000	0.488	0.532	0.550	0.594	3.5	4	564	-	602	-
B	2,500	0.488	0.567	0.559	0.630	2.5	4	508	-	545	-
B Slip Formed	2,500	0.488	0.567	-	-	1.5	-	508	-	-	-
Sand Light-weight	4,500	-	0.420	-	-	4	-	715	-	-	-
Latex Modified	3,000 7 day	0.400	0.400	-	-	6	-	658	-	-	-
Flowable Fill excavatable	150 max. at 56 days	as needed	as needed	as needed	as needed	-	Flow-able	-	-	40	100
Flowable Fill non-excavatable	125	as needed	as needed	as needed	as needed	-	Flow-able	-	-	100	as needed
Pavement	4,500 design, field 650 flexural, design only	0.559	0.559	-	-	1.5 slip form 3.0 hand place	-	526	-	-	-
Precast	See Table 1077-1	as needed	as needed	-	-	6	as needed	as needed	as needed	as needed	as needed
Prestress	per contract	See Table 1078-1	See Table 1078-1	-	-	8	-	564	as needed	-	-

Page 10-65, Article 1050-1, GENERAL, line 41, replace the first sentence with:

All fencing material and accessories shall meet Section 106.

Page 10-23, Table 1005-1, AGGREGATE GRADATION-COARSE AGGREGATE, replace with the following:

TABLE 1005-1
AGGREGATE GRADATION - COARSE AGGREGATE

Percentage of Total by Weight Passing

Std. Size #	2"	1 1/2"	1"	3/4"	1/2"	3/8"	#4	#8	#10	#16	#40	#200	Remarks
4	100	90-100	20-55	0-15	-	0-5	-	-	-	-	-	**A**	Asphalt Plant Mix
467M	100	95-100	-	35-70	-	0-30	0-5	-	-	-	-	**A**	Asphalt Plant Mix
5	-	100	90-100	20-55	0-10	0-5	-	-	-	-	-	**A**	AST, Sediment Control Stone
57	-	100	95-100	-	25-60	-	0-10	0-5	-	-	-	**A**	AST, Str. Concrete, Shoulder Drain, Sediment Control Stone
57M	-	100	95-100	-	25-45	-	0-10	0-5	-	-	-	**A**	AST, Concrete Pavement
6M	-	-	100	90-100	20-55	0-20	0-8	-	-	-	-	**A**	AST
67	-	-	100	90-100	-	20-55	0-10	0-5	-	-	-	**A**	AST, Str. Concrete, Asphalt Plant Mix
78M	-	-	-	100	98-100	75-100	20-45	0-15	-	-	-	**A**	Asphalt Plant Mix, AST, Str. Conc, Weep Hole Drains
14M	-	-	-	-	-	100	35-70	5-20	-	0-8	-	**A**	Asphalt Plant Mix, AST, Weep Hole Drains, Str. Concrete
9	-	-	-	-	-	100	85-100	10-40	-	0-10	-	**A**	AST
ABC	-	100	75-97	-	55-80	-	35-55	-	25-45	-	14-30	4-12[B]	Aggregate Base Course, Aggregate Stabilization
ABC (M)	-	100	75-100	-	45-79	-	20-40	-	0-25	-	-	0-12[B]	Maintenance Stabilization
Light-weight[C]	-	-	-	-	100	80-100	5-40	0-20	-	0-10	-	0-2.5	AST

A. See Subarticle 1005-4(A).
B. See Subarticle 1005-4(B).
C. For Lightweight Aggregate used in Structural Concrete, see Subarticle 1014-2(E)(6).

Page 10-115, Subarticle 1074-7(B), Gray Iron Castings, lines 10-11, replace with the first two sentences with the following:

Supply gray iron castings meeting all facets of AASHTO M 306 excluding proof load. Proof load testing will only be required for new casting designs during the design process, and conformance to M306 loading (40,000 lbs.) will be required only when noted on the design documents.

Page 10-126, Table 1078-1, REQUIREMENTS FOR CONCRETE, replace with the following:

TABLE 1078-1 REQUIREMENTS FOR CONCRETE		
Property	**28 Day Design Compressive Strength 6,000 psi or less**	**28 Day Design Compressive Strength greater than 6,000 psi**
Maximum Water/Cementitious Material Ratio	0.45	0.40
Maximum Slump without HRWR	3.5"	3.5"
Maximum Slump with HRWR	8"	8"
Air Content (upon discharge into forms)	5 + 2%	5 + 2%

Page 10-151, Article 1080-4 Inspection and Sampling, lines 18-22, replace (B), (C) and (D) with the following:

(B) At least 3 panels prepared as specified in 5.5.10 of AASHTO M 300, Bullet Hole Immersion Test.

(C) At least 3 panels of 4"x6"x1/4" for the Elcometer Adhesion Pull Off Test, ASTM D4541.

(D) A certified test report from an approved independent testing laboratory for the Salt Fog Resistance Test, Cyclic Weathering Resistance Test, and Bullet Hole Immersion Test as specified in AASHTO M 300.

(E) A certified test report from an approved independent testing laboratory that the product has been tested for slip coefficient and meets AASHTO M253, Class B.

Page 10-162, Subarticle 1081-1(A) Classifications, lines 4-7, delete the second and third sentences of the description for Type 3A.

Page 10-162, Subarticle 1081-1(B) Requirements, lines 26-30, replace the second paragraph with the following:

For epoxy resin systems used for embedding dowel bars, threaded rods, rebar, anchor bolts and other fixtures in hardened concrete, the manufacturer shall submit test results showing that the bonding system will obtain 125% of the specified required yield strength of the fixture. Furnish certification that, for the particular bolt grade, diameter and embedment depth required, the anchor system will not fail by adhesive failure and that there is no movement of the anchor bolt. For certification and anchorage, use 3,000 psi as the minimum Portland cement concrete compressive strength used in this test. Use adhesives that meet Section 1081.

List the properties of the adhesive on the container and include density, minimum and maximum temperature application, setting time, shelf life, pot life, shear strength and compressive strength.

Page 10-169, Subarticle 1081-3(G) Anchor Bolt Adhesives, delete this subarticle.

Page 10-179, Subarticle 1087-4(A) Composition, lines 39-41, replace the third paragraph with the following:

All intermixed and drop-on glass beads shall not contain more than 75 ppm arsenic or 200 ppm lead.

Page 10-180, Subarticle 1087-4(B) Physical Characteristics, line 8, replace the second paragraph with the following:

All intermixed and drop-on glass beads shall comply with NCGS § 136-30.2 and 23 USC § 109(r).

Page 10-181, Subarticle 1087-7(A) Intermixed and Drop-on Glass Beads, line 24, add the following after the first paragraph:

Use X-ray Fluorescence for the normal sampling procedure for intermixed and drop-on beads, without crushing, to check for any levels of arsenic and lead. If any arsenic or lead is detected, the sample shall be crushed and repeat the test using X-ray Fluorescence. If the X-ray Fluorescence test shows more than a LOD of 5 ppm, test the beads using United States Environmental Protection Agency Method 6010B, 6010C or 3052 for no more than 75 ppm arsenic or 200 ppm lead.

Page 10-204, Subarticle 1092-2(A) Performance and Test Requirements, replace **Table 1092-3 Minimum Coefficient of Retroreflection for NC Grade A** with the following:

TABLE 1092-3 MINIMUM COEFFICIENT OF RETROREFLECTION FOR NC GRADE A (Candelas Per Lux Per Square Meter)								
Observation Angle, degrees	**Entrance Angle, degrees**	**White**	**Yellow**	**Green**	**Red**	**Blue**	**Fluorescent Yellow Green**	**Fluorescent Yellow**
0.2	-4.0	525	395	52	95	30	420	315
0.2	30.0	215	162	22	43	10	170	130
0.5	-4.0	310	230	31	56	18	245	185
0.5	30.0	135	100	14	27	6	110	81
1.0	-4.0	**120**	60	8	16	3.6	64	48
1.0	30.0	45	34	4.5	9	2	36	27

SHOULDER AND SLOPE BORROW

(3-19-13) 1019 SP10 R10

Use soil in accordance with Section 1019 of the *2012 Standard Specifications*. Use soil consisting of loose, friable, sandy material with a PI greater than 6 and less than 25 and a pH ranging from 5.5 to 7.0.

Soil with a pH ranging from 4.0 to 5.5 will be accepted without further testing if additional limestone is provided in accordance with the application rates shown in Table 1019-1A. Soil type is identified during the soil analysis. Soils with a pH above 7.0 require acidic amendments to be added. Submit proposed acidic amendments to the Engineer for review and approval. Soils with a pH below 4.0 or that do not meet the PI requirements shall not be used.

TABLE 1019-1A ADDITIONAL LIMESTONE APPLICATION RATE TO RAISE pH			
pH TEST RESULT	**Sandy Soils Additional Rate (lbs. / Acre)**	**Silt Loam Soils Additional Rate (lbs. / Acre)**	**Clay Loam Soils Additional Rate (lbs. / Acre)**
4.0 - 4.4	1,000	4,000	6,000
4.5 - 4.9	500	3,000	5,000
5.0 - 5.4	NA	2,000	4,000

Note: Limestone application rates shown in this table are in addition to the standard rate of 4000 lbs. / acre required for seeding and mulching.

No direct payment will be made for providing additional lime or acidic amendments for Ph adjustment.

MINORITY BUSINESS ENTERPRISE AND WOMEN BUSINESS ENTERPRISE (DIVISIONS)

(10-16-07)(Rev. 5-21-13) 102-15(J) SP1 G67

Description

The purpose of this Special Provision is to carry out the North Carolina Department of Transportation's policy of ensuring nondiscrimination in the award and administration of contracts financed in whole or in part with State funds.

Definitions

Additional MBE/WBE Subcontractors - Any MBE/WBE submitted at the time of bid that will <u>not</u> be used to meet either the MBE or WBE goal. No submittal of a Letter of Intent is required.

Committed MBE/WBE Subcontractor - Any MBE/WBE submitted at the time of bid that is being used to meet either the MBE or WBE goal by submission of a Letter of Intent. Or any MBE or WBE used as a replacement for a previously committed MBE or WBE firm.

Contract Goals Requirement - The approved MBE and WBE participation at time of award, but not greater than the advertised contract goals for each.

Goal Confirmation Letter - Written documentation from the Department to the bidder confirming the Contractor's approved, committed MBE and WBE participation along with a listing of the committed MBE and WBE firms.

Manufacturer - A firm that operates or maintains a factory or establishment that produces on the premises, the materials or supplies obtained by the Contractor.

MBE Goal - A portion of the total contract, expressed as a percentage, that is to be performed by committed MBE subcontractor(s).

Minority Business Enterprise (MBE) - A firm certified as a Disadvantaged Minority-Owned Business Enterprise through the North Carolina Unified Certification Program.

Regular Dealer - A firm that owns, operates, or maintains a store, warehouse, or other establishment in which the materials or supplies required for the performance of the contract are bought, kept in stock, and regularly sold to the public in the usual course of business. A regular dealer engages in, as its principal business and in its own name, the purchase and sale or lease of the products in question. A regular dealer in such bulk items as steel, cement, gravel, stone, and petroleum products need not keep such products in stock, if it owns and operates distribution equipment for the products. Brokers and packagers are not regarded as manufacturers or regular dealers within the meaning of this section.

North Carolina Unified Certification Program (NCUCP) - A program that provides comprehensive services and information to applicants for MBE/WBE certification. The MBE/WBE program follows the same regulations as the federal Disadvantaged Business Enterprise (DBE) program in accordance with 49 CFR Part 26.

United States Department of Transportation (USDOT) - Federal agency responsible for issuing regulations (49 CFR Part 26) and official guidance for the DBE program.

WBE Goal - A portion of the total contract, expressed as a percentage, that is to be performed by committed WBE subcontractor(s).

Women Business Enterprise (WBE) - A firm certified as a Disadvantaged Women-Owned Business Enterprise through the North Carolina Unified Certification Program.

Forms and Websites Referenced in this Provision

Payment Tracking System - On-line system in which the Contractor enters the payments made to MBE and WBE subcontractors who have performed work on the project. https://apps.dot.state.nc.us/Vendor/PaymentTracking/

DBE-IS *Subcontractor Payment Information* - Form for reporting the payments made to all MBE/WBE firms working on the project. This form is for paper bid projects only. http://www.ncdot.org/doh/forms/files/DBE-IS.xls

RF-1 *MBE/WBE Replacement Request Form* - Form for replacing a committed MBE or WBE.
http://connect.ncdot.gov/projects/construction/Construction%20Forms/DBE%20MBE%20WBE%20Replacement%20Request%20Form.pdf

SAF *Subcontract Approval Form* - Form required for approval to sublet the contract.
http://connect.ncdot.gov/projects/construction/Construction%20Forms/Subcontract%20Approval%20Form%20Rev.%202012.zip

JC-1 *Joint Check Notification Form* - Form and procedures for joint check notification. The form acts as a written joint check agreement among the parties providing full and prompt disclosure of the expected use of joint checks.
http://connect.ncdot.gov/projects/construction/Construction%20Forms/Joint%20Check%20Notification%20Form.pdf

Letter of Intent - Form signed by the Contractor and the MBE/WBE subcontractor, manufacturer or regular dealer that affirms that a portion of said contract is going to be performed by the signed MBE/WBE for the amount listed at the time of bid.
http://connect.ncdot.gov/letting/LetCentral/Letter%20of%20Intent%20to%20Perform%20as%20a%20Subcontractor.pdf

Listing of MBE and WBE Subcontractors Form - Form for entering MBE/WBE subcontractors on a project that will meet this MBE and WBE goals. This form is for paper bids only.
http://connect.ncdot.gov/municipalities/Bid%20Proposals%20for%20LGA%20Content/09%20MBE-WBE%20Subcontractors%20(State).doc

Subcontractor Quote Comparison Sheet - Spreadsheet for showing all subcontractor quotes in the work areas where MBEs and WBEs quoted on the project. This sheet is submitted with good faith effort packages.
http://connect.ncdot.gov/business/SmallBusiness/Documents/DBE%20Subcontractor%20Quote%20Comparison%20Example.xls

MBE and WBE Goal

The following goals for participation by Minority Business Enterprises and Women Business Enterprises are established for this contract:

(A) **Minority Business Enterprises 2%**

(1) *If the MBE goal is more than zero*, the Contractor shall exercise all necessary and reasonable steps to ensure that MBEs participate in at least the percent of the contract as set forth above as the MBE goal.

(2) *If the MBE goal is zero*, the Contractor shall make an effort to recruit and use MBEs during the performance of the contract. Any MBE participation obtained shall be reported to the Department.

(B) **Women Business Enterprises 2%**

(1) *If the WBE goal is more than zero*, the Contractor shall exercise all necessary and reasonable steps to ensure that WBEs participate in at least the percent of the contract as set forth above as the WBE goal.

(2) *If the WBE goal is zero*, the Contractor shall make an effort to recruit and use WBEs during the performance of the contract. Any WBE participation obtained shall be reported to the Department.

Directory of Transportation Firms (Directory)

Real-time information is available about firms doing business with the Department and firms that are certified through NCUCP in the Directory of Transportation Firms. Only firms identified in the Directory as MBE and WBE certified shall be used to meet the MBE and WBE goals respectively. The Directory can be found at the following link. https://partner.ncdot.gov/VendorDirectory/default.html

The listing of an individual firm in the directory shall not be construed as an endorsement of the firm's capability to perform certain work.

Listing of MBE/WBE Subcontractors

At the time of bid, bidders shall submit <u>all</u> MBE and WBE participation that they anticipate to use during the life of the contract. Only those identified to meet the MBE goal and the WBE goal will be considered committed, even though the listing shall include both committed MBE/WBE subcontractors and additional MBE/WBE subcontractors. Any additional MBE/WBE subcontractor participation submitted at the time of bid will be used toward overall race-neutral goals. Only those firms with current MBE and WBE certification at the time of bid opening will be acceptable for listing in the bidder's submittal of MBE and WBE participation. The Contractor shall indicate the following required information:

<u>Blank forms will not be deemed to represent zero participation</u>. Bids submitted that do not have MBE and WBE participation indicated on the appropriate form will not be read publicly during the opening of bids. The Department will not consider these bids for award and the proposal will be rejected.

(A) *If either the MBE or WBE goal is more than zero,*

(1) Bidders, at the time the bid proposal is submitted, shall submit a listing of MBE/WBE participation, including the names and addresses on *Listing of MBE and WBE Subcontractors* contained elsewhere in the contract documents in order for the bid to be considered responsive. Bidders shall indicate the total dollar value of the MBE and WBE participation for the contract.

(2) If bidders have no MBE or WBE participation, they shall indicate this on the *Listing of MBE and WBE Subcontractors* by entering the word "None" or the number "0." This form shall be completed in its entirety.

(3) The bidder shall be responsible for ensuring that the MBE/WBE is certified at the time of bid by checking the Directory of Transportation Firms. If the firm is not certified at the time of the bid-letting, that MBE's or WBE's participation will not count towards achieving the corresponding goal.

(B) *If either the MBE or WBE goal is zero,* bidders, at the time the bid proposal is submitted, shall enter the word "None"; or the number "0"; or if there is participation, add the value on the *Listing of MBE and WBE Subcontractors* contained elsewhere in the contract documents.

MBE or WBE Prime Contractor

When a certified MBE or WBE firm bids on a contract that contains MBE and WBE goals, the firm is responsible for meeting the goals or making good faith efforts to meet the goals, just like any other bidder. In most cases, a MBE or WBE bidder on a contract will meet one of the goals by virtue of the work it performs on the contract with its own forces. However, all the work that is performed by the MBE or WBE bidder and any other similarly certified subcontractors will count toward the goal. The MBE or WBE bidder shall list itself along with any MBE or WBE subcontractors, if any, in order to receive credit toward the goals.

For example, on a proposed contract, the WBE goal is 10%, and the MBE goal is 8%. A WBE bidder puts in a bid where they will perform 40% of the contract work and have a WBE subcontractor which will perform another 5% of the work. Together the two WBE firms submit on the *Listing of MBE and WBE Subcontractors* a value of 45% of the contract which fulfills the WBE goal. The 8% MBE goal shall be obtained through MBE participation with MBE certified subcontractors or documented through a good faith effort. It should be noted that you cannot combine the two goals to meet an overall value. The two goals shall remain separate.

MBE/WBE prime contractors shall also follow Sections A or B listed under *Listing of MBE/WBE Subcontractors* just as a non-MBE/WBE bidder would.

Written Documentation – Letter of Intent

The bidder shall submit written documentation for each MBE/WBE that will be used to meet the MBE and WBE goals of the contract, indicating the bidder's commitment to use the MBE/WBE in the contract. This documentation shall be submitted on the Department's form titled *Letter of Intent*.

The documentation shall be received in the office of the Engineer no later than 12:00 noon of the sixth calendar day following opening of bids, unless the sixth day falls on Saturday, Sunday or an official state holiday. In that situation, it is due in the office of the Engineer no later than 12:00 noon on the next official state business day.

If the bidder fails to submit the Letter of Intent from each committed MBE and WBE to be used toward the MBE and WBE goals, or if the form is incomplete (i.e. both signatures are not present), the MBE/WBE participation will not count toward meeting the MBE/WBE goal. If the lack of this participation drops the commitment below either the MBE or WBE goal, the Contractor shall submit evidence of good faith efforts for the goal not met, completed in its entirety, to the Engineer no later than 12:00 noon of the eighth calendar day following opening of bids, unless

the eighth day falls on Saturday, Sunday or an official state holiday. In that situation, it is due in the office of the Engineer no later than 12:00 noon on the next official state business day.

Submission of Good Faith Effort

If the bidder fails to meet or exceed either the MBE or the WBE goal, the apparent lowest responsive bidder shall submit to the Department documentation of adequate good faith efforts made to reach that specific goal(s).

One complete set and nine copies of this information shall be received in the office of the Engineer no later than 12:00 noon of the sixth calendar day following opening of bids, unless the sixth day falls on Saturday, Sunday or an official state holiday. In that situation, it is due in the office of the Engineer no later than 12:00 noon on the next official state business day.

Note: Where the information submitted includes repetitious solicitation letters, it will be acceptable to submit a representative letter along with a distribution list of the firms that were solicited. Documentation of MBE/WBE quotations shall be a part of the good faith effort submittal. This documentation may include written subcontractor quotations, telephone log notations of verbal quotations, or other types of quotation documentation.

Consideration of Good Faith Effort for Projects with MBE/WBE Goals More Than Zero

Adequate good faith efforts mean that the bidder took all necessary and reasonable steps to achieve the goal which, by their scope, intensity, and appropriateness, could reasonably be expected to obtain sufficient MBE/WBE participation. Adequate good faith efforts also mean that the bidder actively and aggressively sought MBE/WBE participation. Mere *pro forma* efforts are not considered good faith efforts.

The Department will consider the quality, quantity, and intensity of the different kinds of efforts a bidder has made. Listed below are examples of the types of actions a bidder will take in making a good faith effort to meet the goals and are not intended to be exclusive or exhaustive, nor is it intended to be a mandatory checklist.

(A) Soliciting through all reasonable and available means (e.g. attendance at pre-bid meetings, advertising, written notices, use of verifiable electronic means through the use of the NCDOT Directory of Transportation Firms) the interest of all certified MBEs/WBEs who have the capability to perform the work of the contract. The bidder must solicit this interest within at least 10 days prior to bid opening to allow the MBEs/WBEs to respond to the solicitation. Solicitation shall provide the opportunity to MBEs/WBEs within the Division and surrounding Divisions where the project is located. The bidder must determine with certainty if the MBEs/WBEs are interested by taking appropriate steps to follow up initial solicitations.

(B) Selecting portions of the work to be performed by MBEs/WBEs in order to increase the likelihood that the MBE and WBE goals will be achieved.

(1) Where appropriate, break out contract work items into economically feasible units to facilitate MBE/WBE participation, even when the prime contractor might otherwise prefer to perform these work items with its own forces.

(2) Negotiate with subcontractors to assume part of the responsibility to meet the contract MBE/WBE goals when the work to be sublet includes potential for MBE/WBE participation (2nd and 3rd tier subcontractors).

(C) Providing interested MBEs/WBEs with adequate information about the plans, specifications, and requirements of the contract in a timely manner to assist them in responding to a solicitation.

(D) (1) Negotiating in good faith with interested MBEs/WBEs. It is the bidder's responsibility to make a portion of the work available to MBE/WBE subcontractors and suppliers and to select those portions of the work or material needs consistent with the available MBE/WBE subcontractors and suppliers, so as to facilitate MBE/WBE participation. Evidence of such negotiation includes the names, addresses, and telephone numbers of MBEs/WBEs that were considered; a description of the information provided regarding the plans and specifications for

the work selected for subcontracting; and evidence as to why additional agreements could not be reached for MBEs/WBEs to perform the work.

(2) A bidder using good business judgment would consider a number of factors in negotiating with subcontractors, including MBE/WBE subcontractors, and would take a firm's price and capabilities as well as contract goals into consideration. However, the fact that there may be some additional costs involved in finding and using MBEs/WBEs is not in itself sufficient reason for a bidder's failure to meet the contract MBE or WBE goals, as long as such costs are reasonable. Also, the ability or desire of a prime contractor to perform the work of a contract with its own organization does not relieve the bidder of the responsibility to make good faith efforts. Bidding contractors are not, however, required to accept higher quotes from MBEs/WBEs if the price difference is excessive or unreasonable.

(E) Not rejecting MBEs/WBEs as being unqualified without sound reasons based on a thorough investigation of their capabilities. The bidder's standing within its industry, membership in specific groups, organizations, or associates and political or social affiliations (for example, union vs. non-union employee status) are not legitimate causes for the rejection or non-solicitation of bids in the bidder's efforts to meet the project goal.

(F) Making efforts to assist interested MBEs/WBEs in obtaining bonding, lines of credit, or insurance as required by the recipient or bidder.

(G) Making efforts to assist interested MBEs/WBEs in obtaining necessary equipment, supplies, materials, or related assistance or services.

(H) Effectively using the services of available minority/women community organizations; minority/women contractors' groups; Federal, State, and local minority/women business assistance offices; and other organizations as allowed on a case-by-case basis to provide assistance in the recruitment and placement of MBEs/WBEs. Contact within 7 days from the bid opening NCDOT's Business Development Manager in the Business Opportunity and Work Force Development Unit to give notification of the bidder's inability to get MBE or WBE quotes.

(I) Any other evidence that the bidder submits which shows that the bidder has made reasonable good faith efforts to meet the MBE and WBE goal.

In addition, the Department may take into account the following:

(1) Whether the bidder's documentation reflects a clear and realistic plan for achieving the MBE and WBE goals.

(2) The bidders' past performance in meeting the MBE and WBE goals.

(3) The performance of other bidders in meeting the MBE and WBE goals. For example, when the apparent successful bidder fails to meet the goals, but others meet it, you may reasonably raise the question of whether, with additional reasonable efforts the apparent successful bidder could have met the goals. If the apparent successful bidder fails to meet the MBE and WBE goals, but meets or exceeds the average MBE and WBE participation obtained by other bidders, the Department may view this, in conjunction with other factors, as evidence of the apparent successful bidder having made a good faith effort.

If the Department does not award the contract to the apparent lowest responsive bidder, the Department reserves the right to award the contract to the next lowest responsive bidder that can satisfy to the Department that the MBE and WBE goals can be met or that an adequate good faith effort has been made to meet the MBE and WBE goals.

Non-Good Faith Appeal

The Engineer will notify the contractor verbally and in writing of non-good faith. A contractor may appeal a determination of non-good faith made by the Goal Compliance Committee. If a contractor wishes to appeal the determination made by the Committee, they shall provide written notification to the Engineer. The appeal shall be made within 2 business days of notification of the determination of non-good faith.

Counting MBE/WBE Participation Toward Meeting MBE/WBE Goals

(A) Participation

The total dollar value of the participation by a committed MBE/WBE will be counted toward the contract goal requirements. The total dollar value of participation by a committed MBE/WBE will be based upon the value of work actually performed by the MBE/WBE and the actual payments to MBE/WBE firms by the Contractor.

(B) Joint Checks

Prior notification of joint check use shall be required when counting MBE/WBE participation for services or purchases that involves the use of a joint check. Notification shall be through submission of Form JC-1 *(Joint Check Notification Form)* and the use of joint checks shall be in accordance with the Department's Joint Check Procedures.

(C) Subcontracts (Non-Trucking)

A MBE/WBE may enter into subcontracts. Work that a MBE subcontracts to another MBE firm may be counted toward the MBE contract goal requirement. The same holds for work that a WBE subcontracts to another WBE firm. Work that a MBE subcontracts to a non-MBE firm does <u>not</u> count toward the MBE contract goal requirement. Again, the same holds true for the work that a WBE subcontracts to a non-WBE firm. If a MBE or WBE contractor or subcontractor subcontracts a significantly greater portion of the work of the contract than would be expected on the basis of standard industry practices, it shall be presumed that the MBE or WBE is not performing a commercially useful function. The MBE/WBE may present evidence to rebut this presumption to the Department. The Department's decision on the rebuttal of this presumption may be subject to review by the Office of Inspector General, NCDOT.

(D) Joint Venture

When a MBE or WBE performs as a participant in a joint venture, the Contractor may count toward its contract goal requirement a portion of the total value of participation with the MBE or WBE in the joint venture, that portion of the total dollar value being a distinct clearly defined portion of work that the MBE or WBE performs with its forces.

(E) Suppliers

A contractor may count toward its MBE or WBE requirement 60 percent of its expenditures for materials and supplies required to complete the contract and obtained from a MBE or WBE regular dealer and 100 percent of such expenditures from a MBE or WBE manufacturer.

(F) Manufacturers and Regular Dealers

A contractor may count toward its MBE or WBE requirement the following expenditures to MBE/WBE firms that are not manufacturers or regular dealers:

(1) The fees or commissions charged by a MBE/WBE firm for providing a *bona fide* service, such as professional, technical, consultant, or managerial services, or for providing bonds or insurance specifically required for the performance of a DOT-assisted contract, provided the fees or commissions are determined to be reasonable and not excessive as compared with fees and commissions customarily allowed for similar services.

(2) With respect to materials or supplies purchased from a MBE/WBE, which is neither a manufacturer nor a regular dealer, count the entire amount of fees or commissions charged for assistance in the procurement of the materials and supplies, or fees or transportation charges for the delivery of materials or supplies required on a job site (but not the cost of the materials and supplies themselves), provided the fees are determined to be reasonable and not excessive as compared with fees customarily allowed for similar services.

Commercially Useful Function

(A) MBE/WBE Utilization

The Contractor may count toward its contract goal requirement only expenditures to MBEs and WBEs that perform a commercially useful function in the work of a contract. A MBE/WBE performs a commercially useful function when it is responsible for execution of the work of the contract and is carrying out its responsibilities by actually performing, managing, and supervising the work involved. To perform a commercially useful function, the MBE/WBE shall also be responsible with respect to materials and supplies used on the contract, for negotiating price, determining quality and quantity, ordering the material and installing (where applicable) and paying for the material itself. To determine whether a MBE/WBE is performing a commercially useful function, the Department will evaluate the amount of work subcontracted, industry practices, whether the amount the firm is to be paid under the contract is commensurate with the work it is actually performing and the MBE/WBE credit claimed for its performance of the work, and any other relevant factors.

(B) MBE/WBE Utilization in Trucking

The following factors will be used to determine if a MBE or WBE trucking firm is performing a commercially useful function:

(1) The MBE/WBE shall be responsible for the management and supervision of the entire trucking operation for which it is responsible on a particular contract, and there shall not be a contrived arrangement for the purpose of meeting the MBE or WBE goal.

(2) The MBE/WBE shall itself own and operate at least one fully licensed, insured, and operational truck used on the contract.

(3) The MBE/WBE receives credit for the total value of the transportation services it provides on the contract using trucks it owns, insures, and operates using drivers it employs.

(4) The MBE may subcontract the work to another MBE firm, including an owner-operator who is certified as a MBE. The same holds true that a WBE may subcontract the work to another WBE firm, including an owner-operator who is certified as a WBE. When this occurs, the MBE or WBE who subcontracts work receives credit for the total value of the transportation services the subcontracted MBE or WBE provides on the contract. It should be noted that every effort shall be made by MBE and WBE contractors to subcontract to the same certification (i.e., MBEs to MBEs and WBEs to WBEs), in order to fulfill the goal requirement. This, however, may not always be possible due to the limitation of firms in the area. If the MBE or WBE firm shows a good faith effort has been made to reach out to similarly certified transportation service providers and there is no interest or availability, and they can get assistance from other certified providers, the Engineer will not hold the prime liable for meeting the goal.

(5) The MBE/WBE may also subcontract the work to a non-MBE/WBE firm, including from an owner-operator. The MBE/WBE who subcontracts the work to a non-MBE/WBE is entitled to credit for the total value of transportation services provided by the non-MBE/WBE subcontractor not to exceed the value of transportation services provided by MBE/WBE-owned trucks on the contract. Additional participation by non-MBE/WBE subcontractors receives credit only for the fee or commission it receives as a result of the subcontract arrangement. The value of services performed under subcontract agreements between the MBE/WBE and the Contractor will not count towards the MBE/WBE contract requirement.

(6) A MBE/WBE may lease truck(s) from an established equipment leasing business open to the general public. The lease must indicate that the MBE/WBE has exclusive use of and control over the truck. This requirement does not preclude the leased truck from working for others during the term of the lease with the consent of the MBE/WBE, so long as the lease gives the MBE/WBE absolute priority for use of the leased truck. This type of lease may count toward the MBE/WBE's credit as long as the driver is under the MBE/WBE's payroll.

(7) Subcontracted/leased trucks shall display clearly on the dashboard the name of the MBE/WBE that they are subcontracted/leased to and their own company name if it is not identified on the truck itself. Magnetic door signs are not permitted.

MBE/WBE Replacement

When a Contractor has relied on a commitment to a MBE or WBE firm (or an approved substitute MBE or WBE firm) to meet all or part of a contract goal requirement, the contractor shall not terminate the MBE/WBE for convenience. This includes, but is not limited to, instances in which the Contractor seeks to perform the work of the terminated subcontractor with another MBE/WBE subcontractor, a non-MBE/WBE subcontractor, or with the Contractor's own forces or those of an affiliate. A MBE/WBE may only be terminated after receiving the Engineer's written approval based upon a finding of good cause for the termination.

All requests for replacement of a committed MBE/WBE firm shall be submitted to the Engineer for approval on Form RF-1 *(Replacement Request).* If the Contractor fails to follow this procedure, the Contractor may be disqualified from further bidding for a period of up to 6 months.

The Contractor shall comply with the following for replacement of a committed MBE/WBE:

(A) Performance Related Replacement

When a committed MBE is terminated for good cause as stated above, an additional MBE that was submitted at the time of bid may be used to fulfill the MBE commitment. The same holds true if a committed WBE is terminated for good cause, an additional WBE that was submitted at the time of bid may be used to fulfill the WBE goal. A good faith effort will only be required for removing a committed MBE/WBE if there were no additional MBEs/WBEs submitted at the time of bid to cover the same amount of work as the MBE/WBE that was terminated.

If a replacement MBE/WBE is not found that can perform at least the same amount of work as the terminated MBE/WBE, the Contractor shall submit a good faith effort documenting the steps taken. Such documentation shall include, but not be limited to, the following:

(1) Copies of written notification to MBEs/WBEs that their interest is solicited in contracting the work defaulted by the previous MBE/WBE or in subcontracting other items of work in the contract.

(2) Efforts to negotiate with MBEs/WBEs for specific subbids including, at a minimum:

(a) The names, addresses, and telephone numbers of MBEs/WBEs who were contacted.
(b) A description of the information provided to MBEs/WBEs regarding the plans and specifications for portions of the work to be performed.

(3) A list of reasons why MBE/WBE quotes were not accepted.

(4) Efforts made to assist the MBEs/WBEs contacted, if needed, in obtaining bonding or insurance required by the Contractor.

(B) Decertification Replacement

(1) When a committed MBE/WBE is decertified by the Department after the SAF (*Subcontract Approval Form*) has been received by the Department, the Department will not require the Contractor to solicit replacement MBE/WBE participation equal to the remaining work to be performed by the decertified firm. The participation equal to the remaining work performed by the decertified firm will count toward the contract goal requirement.

(2) When a committed MBE/WBE is decertified prior to the Department receiving the SAF (*Subcontract Approval Form*) for the named MBE/WBE firm, the Contractor shall take all necessary and reasonable steps to replace the MBE/WBE subcontractor with another similarly certified MBE/WBE subcontractor to perform at least the same amount of work to meet the

MBE/WBE goal requirement. If a MBE/WBE firm is not found to do the same amount of work, a good faith effort must be submitted to NCDOT (see A herein for required documentation).

Changes in the Work

When the Engineer makes changes that result in the reduction or elimination of work to be performed by a committed MBE/WBE, the Contractor will not be required to seek additional participation. When the Engineer makes changes that result in additional work to be performed by a MBE/WBE based upon the Contractor's commitment, the MBE/WBE shall participate in additional work to the same extent as the MBE/WBE participated in the original contract work.

When the Engineer makes changes that result in extra work, which has more than a minimal impact on the contract amount, the Contractor shall seek additional participation by MBEs/WBEs unless otherwise approved by the Engineer.

When the Engineer makes changes that result in an alteration of plans or details of construction, and a portion or all of the work had been expected to be performed by a committed MBE/WBE, the Contractor shall seek participation by MBEs/WBEs unless otherwise approved by the Engineer.

When the Contractor requests changes in the work that result in the reduction or elimination of work that the Contractor committed to be performed by a MBE/WBE, the Contractor shall seek additional participation by MBEs/WBEs equal to the reduced MBE/WBE participation caused by the changes.

Reports and Documentation

A SAF (*Subcontract Approval Form*) shall be submitted for all work which is to be performed by a MBE/WBE subcontractor. The Department reserves the right to require copies of actual subcontract agreements involving MBE/WBE subcontractors.

When using transportation services to meet the contract commitment, the Contractor shall submit a proposed trucking plan in addition to the SAF. The plan shall be submitted prior to beginning construction on the project. The plan shall include the names of all trucking firms proposed for use, their certification type(s), the number of trucks owned by the firm, as well as the individual truck identification numbers, and the line item(s) being performed.

Within 30 calendar days of entering into an agreement with a MBE/WBE for materials, supplies or services, not otherwise documented by the SAF as specified above, the Contractor shall furnish the Engineer a copy of the agreement. The documentation shall also indicate the percentage (60% or 100%) of expenditures claimed for MBE/WBE credit.

Reporting Minority and Women Business Enterprise Participation

The Contractor shall provide the Engineer with an accounting of payments made to all MBE and WBE firms, including material suppliers and contractors at all levels (prime, subcontractor, or second tier subcontractor). This accounting shall be furnished to the Engineer for any given month by the end of the following month. Failure to submit this information accordingly may result in the following action:

(A) Withholding of money due in the next partial pay estimate; or

(B) Removal of an approved contractor from the prequalified bidders' list or the removal of other entities from the approved subcontractors list.

While each contractor (prime, subcontractor, 2nd tier subcontractor) is responsible for accurate accounting of payments to MBEs/WBEs, it shall be the prime contractor's responsibility to report all monthly and final payment information in the correct reporting manner.

Failure on the part of the Contractor to submit the required information in the time frame specified may result in the disqualification of that contractor and any affiliate companies from further bidding until the required information is submitted.

Failure on the part of any subcontractor to submit the required information in the time frame specified may result in the disqualification of that contractor and any affiliate companies from being approved for further work on future projects until the required information is submitted.

Contractors reporting transportation services provided by non-MBE/WBE lessees shall evaluate the value of services provided during the month of the reporting period only.

At any time, the Engineer can request written verification of subcontractor payments.

The Contractor shall report the accounting of payments on the Department's DBE-IS *(Subcontractor Payment Information)* with each invoice. Invoices will not be processed for payment until the DBE-IS is received.

Failure to Meet Contract Requirements

Failure to meet contract requirements in accordance with Subarticle 102-15(J) of the *2012 Standard Specifications* may be cause to disqualify the Contractor.

SPECIAL PROVISIONS

CONSTRUCTION METHODS

The contractor shall perform all construction activities in accordance with the applicable requirements of the NCDOT Standard Specifications for Roads and Structures dated January 2012, except as otherwise specified herein.

Wherever reference is made in the Specifications to information shown in the plans, such information will be furnished by the Engineer.

SITE INVESTIGATION AND REPRESENTATION

The Contractor acknowledges that he has satisfied himself as to the nature of the work, and general and local conditions; particularly those bearing on transportation, availability of labor, State Regulations for safety and security of property, roads, and facilities required for the prosecution of the work and all matters which can in any way affect the work or cost thereof under this contract. Any failure by the Contractor to acquaint himself with all the available information concerning these conditions not relieve him from the responsibility for estimating properly the difficulty of cost of successfully performing the work.

CONTROL OF EROSION, SILT AND POLLUTION

Control of erosion, siltation and pollution shall meet the requirements of section 107-12 of the Standard Specifications for Roads and Structures dated January, 2012 and as shown on the plans.

The Contractor may, at his option, submit an alternate plan and sequence by submitting 3 copies of the proposed alternate to the Engineer for approval. Approval must be obtained before construction is started on the alternate plan.

In the event the erosion and sedimentation control plan is not followed or properly maintained, all other work shall be suspended until corrections are made.

The Contractor shall exercise every reasonable precaution throughout the life of the project to prevent erosion and siltation.

DRIVEWAYS AND PRIVATE PROPERTY

The Contractor shall maintain access to driveways for all residents and property owners throughout the life of the project.

The Contractor shall not perform work for private citizens or agencies in conjunction with this project or within the project limits of this contract. Any driveway paved by a Contractor which ties into a NCDOT system road being paved by the Contractor must be paved either prior to the road paving project or after its completion.

NO MAJOR CONTRACT ITEMS

None of the items included in this contract will be major items.

SPECIALTY ITEMS

(7-1-95) SP1 G37

None of the items included in this contract will be specialty items.

CLEARING AND GRUBBING - METHOD II

(4-6-06) (Rev. 1-17-12) 200 SP2 R02B

Perform clearing on this project to the limits established by Method “III” shown on Standard Drawing No. 200.02 of the *2012 Roadway Standard Drawings*.

PIPE INSTALLATION

(11-20-12) 300 SP3 R01

Revise the *2012 Standard Specifications* as follows:

Page 3-1, Article 300-2, Materials, line 23-24, replace sentence with:

Provide foundation conditioning geotextile in accordance with Section 1056 for Type 4 geotextile.

ASPHALT PAVEMENTS - SUPERPAVE

(6-19-12) (Rev. 4-16-13) 605, 609, 610 SP6 R01

Revise the *2012 Standard Specifications* as follows:

Page 6-3, Article 605-7 APPLICATION RATES AND TEMPERATURES, replace this article, including Table 601-1, with the following:

Apply tack coat uniformly across the existing surface at target application rates shown in Table 605-1.

TABLE 605-1
APPLICATION RATES FOR TACK COAT

Existing Surface	Target Rate (gal/sy)
	Emulsified Asphalt
New Asphalt	0.04 ± 0.01
Oxidized or Milled Asphalt	0.06 ± 0.01
Concrete	0.08 ± 0.01

Apply tack coat at a temperature within the ranges shown in Table 605-2. Tack coat shall not be overheated during storage, transport or at application.

TABLE 605-2
APPLICATION TEMPERATURE FOR TACK COAT

Asphalt Material	Temperature Range
Asphalt Binder, Grade PG 64-22	350 - 400°F
Emulsified Asphalt, Grade RS-1H	130 - 160°F
Emulsified Asphalt, Grade CRS-1	130 - 160°F
Emulsified Asphalt, Grade CRS-1H	130 - 160°F
Emulsified Asphalt, Grade HFMS-1	130 - 160°F
Emulsified Asphalt, Grade CRS-2	130 - 160°F

Page 6-7, Article 609-3 FIELD VERIFICATION OF MIXTURE AND JOB MIX FORMULA ADJUSTMENTS, lines 35-37, delete the second sentence of the second paragraph.

Page 6-18, Article 610-1 DESCRIPTION, lines 40-41, delete the last sentence of the last paragraph.

Page 6-19, Subarticle 610-3(A) Mix Design-General, line 5, add the following as the first paragraph:

Warm mix asphalt (WMA) is allowed for use at the Contractor's option in accordance with the NCDOT Approved Products List for WMA Technologies available at:

https://connect.ncdot.gov/resources/Materials/MaterialsResources/WMA%20Approved%20Lists.pdf

Page 6-21, Subarticle 610-3(C) Job Mix Formula (JMF), replace Table 610-1 with the following:

TABLE 610-1 DESIGN MIXING TEMPERATURE AT THE ASPHALT PLANT[A]		
Binder Grade	**HMA JMF Temperature**	**WMA JMF Temperature Range**
PG 64-22	300ºF	225 - 275ºF
PG 70-22	315ºF	240 - 290ºF
PG 76-22	335ºF	260 - 310ºF

A. The mix temperature, when checked in the truck at the roadway, shall be within plus 15º and minus 25º of the temperature specified on the JMF.

Page 6-21, Subarticle 610-3(C) Job Mix Formula (JMF), lines 4-6, delete first sentence of the second paragraph. Line 7, in the second sentence of the second paragraph, replace "275ºF" with "275ºF or greater."

Page 6-22, Article 610-4 WEATHER, TEMPERATURE AND SEASONAL LIMITATIONS FOR PRODUCING AND PLACING ASPHALT MIXTURES, lines 15-17, replace the second sentence of the first paragraph with the following:

Do not place asphalt material when the air or surface temperatures, measured at the location of the paving operation away from artificial heat, do not meet Table 610-5.

Page 6-23, Article 610-4 WEATHER, TEMPERATURE AND SEASONAL LIMITATIONS FOR PRODUCING AND PLACING ASPHALT MIXTURES, replace Table 610-5 with the following:

TABLE 610-5 PLACEMENT TEMPERATURES FOR ASPHALT	
Asphalt Concrete Mix Type	**Minimum Surface and Air Temperature**
B25.0B, C	35°F
I19.0B, C, D	35°F
SF9.5A, S9.5B	40°F
S9.5C, S12.5C	45°F
S9.5D, S12.5D	50°F

Page 6-26, Article 610-7 HAULING OF ASPHALT MIXTURE, lines 22-23, in the fourth sentence of the first paragraph replace "so as to overlap the top of the truck bed and" with "to".

ASPHALT PAVER - FIXED AND MOBILE STRING LINE

(10-21-03) (Rev. 1-17-12) 610 SP6 R06B

A mobile string line consisting of a 30 to 40 foot long ski is required for the widening and resurfacing on this project. A fixed string line is required for the new pavement construction on this project.

ASPHALT BINDER CONTENT OF ASPHALT PLANT MIXES

(11-21-00) (Rev 7-19-11) SP6 R15

The approximate asphalt binder content of the asphalt concrete plant mixtures used on this project will be as follows:

Asphalt Concrete Base Course	Type B 25.0__	4.4%
Asphalt Concrete Intermediate Course	Type I 19.0__	4.8%
Asphalt Concrete Surface Course	Type S 4.75A	6.8%
Asphalt Concrete Surface Course	Type SF 9.5A	6.7%
Asphalt Concrete Surface Course	Type S 9.5__	6.0%
Asphalt Concrete Surface Course	Type S 12.5__	5.5%

The actual asphalt binder content will be established during construction by the Engineer within the limits established in the *2012 Standard Specifications.*

FUEL PRICE ADJUSTMENT

(11-15-05) (Rev. 1-17-12) 109-8 SP1 G43

Revise the *2012 Standard Specifications* as follows:

Page 1-83, Article 109-8, Fuel Price Adjustments, add the following:

The base index price for DIESEL #2 FUEL is **$ 2.9306** per gallon. Where any of the following are included as pay items in the contract, they will be eligible for fuel price adjustment.

The pay items and the fuel factor used in calculating adjustments to be made will be as follows:

Description	Units	Fuel Usage Factor Diesel
Unclassified Excavation	Gal/CY	0.29
Borrow Excavation	Gal/CY	0.29
Class IV Subgrade Stabilization	Gal/Ton	0.55
Aggregate Base Course	Gal/Ton	0.55
Asphalt Concrete Base Course, Type ____	Gal/Ton	2.90
Asphalt Concrete Intermediate Course, Type ____	Gal/Ton	2.90
Asphalt Concrete Surface Course, Type ____	Gal/Ton	2.90
Open-Graded Asphalt Friction Course	Gal/Ton	2.90
Sand Asphalt Surface Course, Type ____	Gal/Ton	2.90
Aggregate for Cement Treated Base Course	Gal/Ton	0.55
Portland Cement for Cement Treated Base Course	Gal/Ton	0.55
__" Portland Cement Concrete Pavement	Gal/SY	0.245
Concrete Shoulders Adjacent to __" Pavement	Gal/SY	0.245

ASPHALT PLANT MIXTURES

(7-1-95) 609 SP6 R20

Place asphalt concrete base course material in trench sections with asphalt pavement spreaders made for the purpose or with other equipment approved by the Engineer.

PRICE ADJUSTMENT - ASPHALT BINDER FOR PLANT MIX

(11-21-00) SP6 R25

Price adjustments for asphalt binder for plant mix will be made in accordance with Section 620 of the *2012 Standard Specifications.*

The base price index for asphalt binder for plant mix is $559.06 per ton.

This base price index represents an average of F.O.B. selling prices of asphalt binder at supplier's terminals on May 1, 2013.

FINAL SURFACE TESTING NOT REQUIRED

(5-18-04) (Rev. 5-15-12) 610 SP6 R45

Final surface testing is not required on this project.

SHOULDER WEDGE

(9-20-11) (Rev. 8-21-12) 610 SP6 R03R

Revise the *2012 Standard Specifications* as follows:

Page 6-26, Article 610-8, add the following after line 43:

Attach a device, mounted on screed of paving equipment, capable of constructing a shoulder wedge with an angle of 30 degrees plus or minus 4 degrees along the outside edge of the roadway, measured from the horizontal plane in

place after final compaction on the final surface course. Use an approved mechanical device which will form the asphalt mixture to produce a wedge with uniform texture, shape and density while automatically adjusting to varying heights.

Payment for use of this device will be incidental to the other pay items in the contract.

LAW ENFORCEMENT

2-19-09 SPI

Description

Furnish Law Enforcement Officers and marked Law Enforcement vehicles to direct traffic in accordance with the contract.

Construction Methods

Use uniformed Law Enforcement Officers and marked Law Enforcement vehicles equipped with blue lights mounted on top of the vehicle, and Law Enforcement vehicle emblems to direct or control traffic as required by the plans or by the Engineer.

Measurement and Payment

Law Enforcement will be measured and paid for in the actual number of hours that each Law Enforcement Officer is provided during the life of the project as approved by the Engineer. There will be no direct payment for marked Law Enforcement vehicles as they are considered incidental to the pay item.

Payment will be made under:

Pay Item	Pay Unit
Law Enforcement	Hour

PERMANENT SOIL REINFORCEMENT MAT

Description

This work consists of furnishing and placing *Permanent Soil Reinforcement Mat*, of the type specified, over previously prepared areas as directed.

Materials

The product shall be a permanent erosion control reinforcement mat and shall be constructed of synthetic or a combination of coconut and synthetic fibers evenly distributed throughout the mat between a bottom UV stabilized netting and a heavy duty UV stabilized top net. The matting shall be stitched together with UV stabilized polypropylene thread to form a permanent three-dimensional structure. The mat shall have the following minimum physical properties:

Property	Test Method	Value	Unit
Light Penetration	ASTM D6567	9	%
Thickness	ASTM D6525	0.40	in
Mass Per Unit Area	ASTM D6566	0.55	lb/sy
Tensile Strength	ASTM D6818	385	lb/ft
Elongation (Maximum)	ASTM D6818	49	%
Resiliency	ASTM D1777	>70	%
UV Stability *	ASTM D4355	≥80	%
Porosity (Permanent Net)	ECTC Guidelines	≥85	%
Maximum Permissible Shear Stress (Vegetated)	Performance Bench Test	≥8.0	lb/ft^2
Maximum Allowable Velocity (Vegetated)	Performance Bench Test	≥16.0	ft/s

*ASTM D1682 Tensile Strength and % strength retention of material after 1000 hours of exposure.

Submit a certification (Type 1, 2, or 3) from the manufacturer showing:

(A) the chemical and physical properties of the mat used, and
(B) conformance of the mat with this specification.

Construction Methods

Matting shall be installed in accordance with Subarticle 1631-3(B) of the *Standard Specifications*.

All areas to be protected with the mat shall be brought to final grade and seeded in accordance with Section 1660 of the *Standard Specifications*. The surface of the soil shall be smooth, firm, stable and free of rocks, clods, roots or other obstructions that would prevent the mat from lying in direct contact with the soil surface. Areas where the mat is to be placed will not need to be mulched.

Measurement and Payment

Permanent Soil Reinforcement Mat will be measured and paid for as the actual number of square yards measured along the surface of the ground over which Permanent Soil Reinforcement Mat is installed and accepted. Overlaps will not be included in the measurement, and will be considered as incidental to the work. Such payment shall be full compensation for furnishing and installing the mat, including overlaps, and for all required maintenance.

Payment will be made under:

Pay Item	**Pay Unit**
Permanent Soil Reinforcement Mat	Square Yard

WATTLES with Polyacrylamide (PAM)

Description

Wattles are tubular products consisting of excelsior fibers encased in synthetic netting. Wattles are used on slopes or channels to intercept runoff and act as a velocity break. Wattles are to be placed at locations shown on the plans or as directed. Installation shall follow the detail provided in the plans and as directed. Work includes furnishing materials, installation of wattles, matting installation, PAM application, and removing wattles.

Materials

Wattle shall meet the following specifications:

100% Curled Wood (Excelsior) Fibers	
Minimum Diameter	12 in.
Minimum Density	2.5 lb/ft^3 +/- 10%
Net Material	Synthetic
Net Openings	1 in. x 1 in.
Net Configuration	Totally Encased
Minimum Weight	20 lb. +/- 10% per 10 ft. length

Anchors: Stakes shall be used as anchors.

Wooden Stakes:

Provide hardwood stakes a minimum of 2-ft. long with a 2 in. x 2 in. nominal square cross section. One end of the stake must be sharpened or beveled to facilitate driving down into the underlying soil.

Matting shall meet the requirements of Article 1060-8 of the *Standard Specifications*, or shall meet specifications provided elsewhere in this contract.

Provide staples made of 0.125" diameter new steel wire formed into a *u* shape not less than 12" in length with a throat of 1" in width.

Polyacrylamide (PAM) shall be applied in powder form and shall be anionic or neutrally charged. Soil samples shall be obtained in areas where the wattles will be placed, and from offsite material used to construct the roadway, and analyzed for the appropriate PAM flocculant to be utilized with each wattle. The PAM product used shall be listed on the North Carolina Department of Environment and Natural Resources (NCDENR) Division of Water Quality (DWQ) web site as an approved PAM product for use in North Carolina.

Construction Methods

Wattles shall be secured to the soil by wire staples approximately every 1 linear foot and at the end of each section of wattle. A minimum of 4 stakes shall be installed on the downstream side of the wattle with a maximum spacing of 2 linear feet along the wattle, and according to the detail. Install a minimum of 2 stakes on the upstream side of the wattle according to the detail provided in the plans. Stakes shall be driven into the ground a minimum of 10 in. with no more than 2 in. projecting from the top of the wattle. Drive stakes at an angle according to the detail provided in the plans.

Only install wattle(s) to a height in ditch so flow will not wash around wattle and scour ditch slopes and according to the detail provided in the plans and as directed. Overlap adjoining sections of wattles a minimum of 6 in.

Installation of matting shall be in accordance with the detail provided in the plans, and in accordance with Article 1631-3 of the *Standard Specifications*, or in accordance with specifications provided elsewhere in this contract.

Apply PAM over the lower center portion of the wattle where the water is going to flow over at a rate of 2 ounces per wattle, and 1 ounce of PAM on matting on each side of the wattle. PAM applications shall be done during construction activities after every rainfall event that is equal to or exceeds 0.50 in.

The Contractor shall maintain the wattles until the project is accepted or until the wattles are removed, and shall remove and dispose of silt accumulations at the wattles when so directed in accordance with the requirements of Section 1630 of the *Standard Specifications*.

Measurement and Payment

Wattles will be measured and paid for by the actual number of linear feet of wattles which are installed and accepted. Such price and payment will be full compensation for all work covered by this section, including, but not limited to, furnishing all materials, labor, equipment and incidentals necessary to install the *Wattles*.

Matting will be measured and paid for in accordance with Article 1631-4 of the *Standard Specifications*, or in accordance with specifications provided elsewhere in this contract.

Polyacrylamide(PAM) will be measured and paid for by the actual weight in pounds of PAM applied to the wattles. Such price and payment will be full compensation for all work covered by this section, including, but not limited to, furnishing all materials, labor, equipment and incidentals necessary to apply the *Polyacrylamide(PAM)*.

Payment will be made under:

Pay Item	**Pay Unit**
Polyacrylamide(PAM)	Pound
Wattle	Linear Foot

STABILIZATION REQUIREMENTS

(11-4-11) S-1

Stabilization for this project shall comply with the time frame guidelines as specified by the NCG-010000 general construction permit effective August 3, 2011 issued by the North Carolina Department of Environment and Natural Resources Division of Water Quality. Temporary or permanent ground cover stabilization shall occur within 7 calendar days from the last land-disturbing activity, with the following exceptions in which temporary or permanent ground cover shall be provided in 14 calendar days from the last land-disturbing activity:

- Slopes between 2:1 and 3:1, with a slope length of 10 ft. or less
- Slopes 3:1 or flatter, with a slope of length of 50 ft. or less
- Slopes 4:1 or flatter

The stabilization timeframe for High Quality Water (HQW) Zones shall be 7 calendar days with no exceptions for slope grades or lengths. High Quality Water Zones (HQW) Zones are defined by North Carolina Administrative Code 15A NCAC 04A.0105 (25). Temporary and permanent ground cover stabilization shall be achieved in accordance with the provisions in this contract and as directed.

SEEDING AND MULCHING (EAST)

The kinds of seed and fertilizer, and the rates of application of seed, fertilizer, and limestone, shall be as stated below. During periods of overlapping dates, the kind of seed to be used shall be determined. All rates are in pounds per acre.

All Roadway Areas

March 1 - August 31		**September 1 - February 28**	
50#	Tall Fescue	50#	Tall Fescue
10#	Centipede	10#	Centipede
25#	Bermudagrass (hulled)	35#	Bermudagrass (unhulled)
500#	Fertilizer	500#	Fertilizer
4000#	Limestone	4000#	Limestone

Waste and Borrow Locations

March 1 - August 31		**September 1 - February 28**	
75#	Tall Fescue	75#	Tall Fescue
25#	Bermudagrass (hulled)	35#	Bermudagrass (unhulled)
500#	Fertilizer	500#	Fertilizer
4000#	Limestone	4000#	Limestone

Note: 50# of Bahiagrass may be substituted for either Centipede or Bermudagrass only upon Engineer’s request.

Approved Tall Fescue Cultivars

2nd Millennium	Duster	Magellan	Rendition
Avenger	Endeavor	Masterpiece	Scorpion
Barlexas	Escalade	Matador	Shelby
Barlexas II	Falcon II, III, IV & V	Matador GT	Signia
Barrera	Fidelity	Millennium	Silverstar
Barrington	Finesse II	Montauk	Southern Choice II
Biltmore	Firebird	Mustang 3	Stetson
Bingo	Focus	Olympic Gold	Tarheel
Bravo	Grande II	Padre	Titan Ltd
Cayenne	Greenkeeper	Paraiso	Titanium
Chapel Hill	Greystone	Picasso	Tomahawk
Chesapeake	Inferno	Piedmont	Tacer
Constitution	Justice	Pure Gold	Trooper
Chipper	Jaguar 3	Prospect	Turbo
Coronado	Kalahari	Quest	Ultimate
Coyote	Kentucky 31	Rebel Exeda	Watchdog
Davinci	Kitty Hawk	Rebel Sentry	Wolfpack
Dynasty	Kitty Hawk 2000	Regiment II	
Dominion	Lexington	Rembrandt	

On cut and fill slopes 2:1 or steeper Centipede shall be applied at the rate of 5 pounds per acre and add 20# of Sericea Lespedeza from January 1 - December 31.

Fertilizer shall be 10-20-20 analysis. A different analysis of fertilizer may be used provided the 1-2-2 ratio is maintained and the rate of application adjusted to provide the same amount of plant food as a 10-20-20 analysis and as directed.

LAWN TYPE APPEARANCE

All areas adjacent to lawns must be hand finished as directed to give a lawn type appearance. Remove all trash, debris, and stones ¾" and larger in diameter or other obstructions that could interfere with providing a smooth lawn type appearance. These areas shall be reseeded to match their original vegetative conditions, unless directed otherwise by the Field Operations Engineer.

TEMPORARY SEEDING

Fertilizer shall be the same analysis as specified for *Seeding and Mulching* and applied at the rate of 400 pounds and seeded at the rate of 50 pounds per acre. Sweet Sudan Grass, German Millet or Browntop Millet shall be used in summer months and Rye Grain during the remainder of the year. The Engineer will determine the exact dates for using each kind of seed.

SUPPLEMENTAL SEEDING

The kinds of seed and proportions shall be the same as specified for *Seeding and Mulching*, with the exception that no centipede seed will be used in the seed mix for supplemental seeding. The rate of application for supplemental seeding may vary from 25# to 75# per acre. The actual rate per acre will be determined prior to the time of topdressing and the Contractor will be notified in writing of the rate per acre, total quantity needed, and areas on which to apply the supplemental seed. Minimum tillage equipment, consisting of a sod seeder shall be used for incorporating seed into the soil as to prevent disturbance of existing vegetation. A clodbuster (ball and chain) may be used where degree of slope prevents the use of a sod seeder.

FERTILIZER TOPDRESSING

Fertilizer used for topdressing on all roadway areas except slopes 2:1 and steeper shall be 10-20-20 grade and shall be applied at the rate of 500 pounds per acre. A different analysis of fertilizer may be used provided the 1-2-2 ratio is maintained and the rate of application adjusted to provide the same amount of plant food as 10-20-20 analysis and as directed.

Fertilizer used for topdressing on slopes 2:1 and steeper and waste and borrow areas shall be 16-8-8 grade and shall be applied at the rate of 500 pounds per acre. A different analysis of fertilizer may be used provided the 2-1-1 ratio is maintained and the rate of application adjusted to provide the same amount of plant food as 16-8-8 analysis and as directed.

STOCKPILE AREAS

The Contractor shall install and maintain erosion control devices sufficient to contain sediment around any erodible material stockpile areas as directed.

MOWING

The minimum mowing height on this project shall be 4 inches.

WASTE AND BORROW SOURCES

Payment for temporary erosion control measures, except those made necessary by the Contractor's own negligence or for his own convenience, will be paid for at the appropriate contract unit price for the devices or measures utilized in borrow sources and waste areas.
No additional payment will be made for erosion control devices or permanent seeding and mulching in any commercial borrow or waste pit. All erosion and sediment control practices that may be required on a commercial borrow or waste site will be done at the Contractor's expense.

RESPONSE FOR EROSION CONTROL

Description

Furnish the labor, materials, tools and equipment necessary to move personnel, equipment, and supplies to the project necessary for the pursuit of any or all of the following work as shown herein, by an approved subcontractor.

Section	Erosion Control Item	Unit
1605	Temporary Silt Fence	LF
1606	Special Sediment Control Fence	LF/TON
1615	Temporary Mulching	ACR
1620	Seed - Temporary Seeding	LB
1620	Fertilizer - Temporary Seeding	TN
1631	Matting for Erosion Control	SY
SP	Coir Fiber Mat	SY
1640	Coir Fiber Baffles	LF
SP	Permanent Soil Reinforcement Mat	SY
1660	Seeding and Mulching	ACR
1661	Seed - Repair Seeding	LB
1661	Fertilizer - Repair Seeding	TON
1662	Seed - Supplemental Seeding	LB
1665	Fertilizer Topdressing	TON
SP	Safety/Highly Visible Fencing	LF
SP	Response for Erosion Control	EA

Construction Methods

Provide an approved subcontractor who performs an erosion control action as described in the NPDES Inspection Form SPPP30. Each erosion control action may include one or more of the above work items.

Measurement and Payment

Response for Erosion Control will be measured and paid for by counting the actual number of times the subcontractor moves onto the project, including borrow and waste sites, and satisfactorily completes an erosion control action described in Form 1675. The provisions of Article 104-5 of the *Standard Specifications* will not apply to this item of work.

Payment will be made under:

Pay Item	**Pay Unit**
Response for Erosion Control	Each

DEPARTMENT FURNISHED SIGNS FOR PURCHASE ORDERS

(7-18-06) R9 R02

Revise the *2012 Standard Specifications* as follows:

Page 9-3 Subarticle 901-3(B) fourth paragraph, first sentence, delete the first sentence and add the following:

Confirm in writing a minimum of **1 month** in advance, the actual date the Department furnished signs will be required.

There will no direct payment for costs involved in transporting, storing, handling, and mounting hardware for the Department furnished signs. This work will be considered incidental to the payitem “Sign for Signals”.

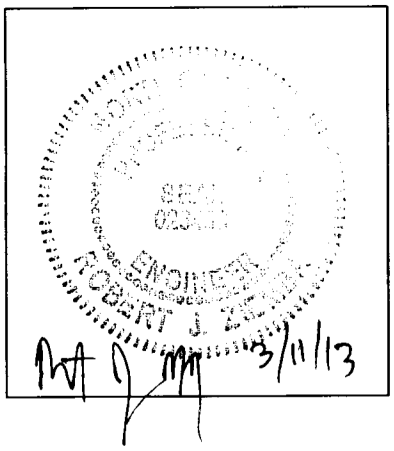

SS-4905BF

Project Special Provisions

(Version 12.1)

Signals and Intelligent Transportation Systems

Prepared By: RJZ
11-Mar-13

Contents

1. SIGNAL HEADS **2**
1.1. MATERIALS 2
A. General: *2*
B. Vehicle Signal Heads: *3*
C. Signal Cable: *5*
D. Louvers: *5*
2. CONTROLLERS WITH CABINETS **5**
2.1. MATERIALS – TYPE 2070L CONTROLLERS 5
2.2. MATERIALS – GENERAL CABINETS 6
2.3. MATERIALS – TYPE 170E CABINETS 6
A. Type 170 E Cabinets General: *6*
B. Type 170 E Cabinet Electrical Requirements: *7*
C. Type 170 E Cabinet Physical Requirements: *12*
D. Model 2018 Enhanced Conflict Monitor: *15*

1. SIGNAL HEADS

1.1. MATERIALS

A. General:

Fabricate vehicle signal head housings and end caps from die-cast aluminum. Provide visor mounting screws, door latches, and hinge pins fabricated from stainless steel. Provide interior screws, fasteners, and metal parts fabricated from stainless steel or corrosion resistant material.

Fabricate tunnel and traditional visors from sheet aluminum.

Paint all surfaces inside and outside of signal housings and doors. Paint outside surfaces of tunnel and traditional visors, messenger cable mounting assemblies, pole and pedestal mounting assemblies, and pedestrian pushbutton housings. Have electrostatically-applied, fused-polyester paint in highway yellow (Federal Standard 595C, Color Chip Number 13538) a minimum of 2.5 to 3.5 mils thick. Do not apply paint to the latching hardware or rigid vehicle signal head mounting brackets for mast-arm attachments.

Have the interior surfaces of tunnel and traditional visors painted an alkyd urea black synthetic baking enamel with a minimum gloss reflectance and meeting the requirements of MIL-E-10169, "Enamel Heat Resisting, Instrument Black."

For pole mounting, provide side of pole mounting assemblies with framework and all other hardware necessary to make complete, watertight connections of the signal heads to the poles and pedestals. Fabricate the mounting assemblies and frames from aluminum with all necessary hardware, screws, washers, etc. to be stainless steel. Provide mounting fittings that match the positive locking device on the signal head with the serrations integrally cast into the brackets. Provide upper and lower pole plates that have a 1 ¼-inch vertical conduit entrance hubs with the hubs capped on the lower plate and 1 ½-inch horizontal hubs. Ensure that the assemblies provide rigid attachments to poles and pedestals so as to allow no twisting or swaying of the signal heads. Ensure that all raceways are free of sharp edges and protrusions, and can accommodate a minimum of ten Number 14 AWG conductors.

For light emitting diode (LED) traffic signal modules, provide the following requirements for inclusion on the Department's Qualified Products List for traffic signal equipment.

1. Sample submittal,
2. Third-party independent laboratory testing results for each submitted module with evidence of testing and conformance with all of the Design Qualification Testing specified in section 6.4 of each of the following Institute of Transportation Engineers (ITE) specifications:
   - Vehicle Traffic Control Signal Heads – Light Emitting Diode (LED) Circular Signal Supplement
   - Vehicle Traffic Control Signal Heads – Light Emitting Diode (LED) Vehicle Arrow Traffic Signal Supplement
   - Pedestrian Traffic Control Signal Indications –Light Emitting Diode (LED) Signal Modules.

   (Note: The Department currently recognizes two approved independent testing laboratories. They are Intertek ETL Semko and Light Metrics, Incorporated with Garwood Laboratories. Independent laboratory tests from other laboratories may be considered as part of the QPL submittal at the discretion of the Department,
3. Evidence of conformance with the requirements of these specifications,

4. A manufacturer's warranty statement in accordance with the required warranty, and
5. Submittal of manufacturer's design and production documentation for the model, including but not limited to, electrical schematics, electronic component values, proprietary part numbers, bill of materials, and production electrical and photometric test parameters.
6. Evidence of approval of the product to bear the Intertek ETL Verified product label for LED traffic signal modules.

In addition to meeting the performance requirements for the minimum period of 60 months, provide a written warranty against defects in materials and workmanship for the modules for a period of 60 months after installation of the modules. During the warranty period, the manufacturer must provide new replacement modules within 45 days of receipt of modules that have failed at no cost to the State. Repaired or refurbished modules may not be used to fulfill the manufacturer's warranty obligations. Provide manufacturer's warranty documentation to the Department during evaluation of product for inclusion on Qualified Products List (QPL).

B. Vehicle Signal Heads:

Comply with the ITE standard "Vehicle Traffic Control Signal Heads". Provide housings with provisions for attaching backplates.

Provide visors that are 10 inches in length for 12-inch vehicle signal heads.

Provide a termination block with one empty terminal for field wiring for each indication plus one empty terminal for the neutral conductor. Have all signal sections wired to the termination block. Provide barriers between the terminals that have terminal screws with a minimum Number 8 thread size and that will accommodate and secure spade lugs sized for a Number 10 terminal screw.

Mount termination blocks in the yellow signal head sections on all in-line vehicle signal heads. Mount the termination block in the red section on five-section vehicle signal heads.

Furnish vehicle signal head interconnecting brackets. Provide one-piece aluminum brackets less than 4.5 inches in height and with no threaded pipe connections. Provide hand holes on the bottom of the brackets to aid in installing wires to the signal heads. Lower brackets that carry no wires and are used only for connecting the bottom signal sections together may be flat in construction.

For messenger cable mounting, provide messenger cable hangers, wire outlet bodies, balance adjusters, bottom caps, wire entrance fitting brackets, and all other hardware necessary to make complete, watertight connections of the vehicle signal heads to the messenger cable. Fabricate mounting assemblies from malleable iron or steel and provide serrated rings made of aluminum. Provide messenger cable hangers and balance adjusters that are galvanized before being painted. Fabricate balance adjuster eyebolt and eyebolt nut from stainless steel or galvanized malleable iron. Provide messenger cable hangers with U-bolt clamps. Fabricate washers, screws, bolts, clevis pins, cotter pins, nuts, and U-bolt clamps from stainless steel.

Provide LED vehicular traffic signal modules (hereafter referred to as modules) that consist of an assembly that uses LEDs as the light source in lieu of an incandescent lamp for use in traffic signal sections. Use LEDs that are aluminum indium gallium phosphorus (AlInGaP) technology for red and yellow indications and indium gallium nitride (InGaN) for green indications. Install the ultra bright type LEDs that are rated for 100,000 hours of continuous operation from -40°F to +165°F. Design modules to have a minimum useful life of 60 months and to meet all parameters of this specification during this period of useful life.

For the modules, provide spade terminals crimped to the lead wires and sized for a #10 screw connection to the existing terminal block in a standard signal head. Do not provide other types of crimped terminals with a spade adapter.

Ensure the power supply is integral to the module assembly. On the back of the module, permanently mark the date of manufacture (month & year) or some other method of identifying date of manufacture.

Tint the red, yellow and green lenses to correspond with the wavelength (chromaticity) of the LED. Transparent tinting films are unacceptable. Provide a lens that is integral to the unit with a smooth outer surface.

1. LED Circular Signal Modules:

Provide modules in the following configurations: 12-inch circular sections, and 8-inch circular sections. All makes and models of LED modules purchased for use on the State Highway System shall appear on the current NCDOT Traffic Signal Qualified Products List (QPL).

Provide the manufacturer's model number and the product number (assigned by the Department) for each module that appears on the 2012 or most recent Qualified Products List. In addition, provide manufacturer's certification in accordance with Article 106-3 of the *Standard Specifications,* that each module meets or exceeds the ITE "Vehicle Traffic Control Signal Heads – Light Emitting Diode (LED) Circular Signal Supplement" dated June 27, 2005 (hereafter referred to as VTCSH Circular Supplement) and other requirements stated in this specification.

Provide modules that meet the following requirements when tested under the procedures outlined in the VTCSH Circular Supplement:

Module Type	Max. Wattage at 165° F	Nominal Wattage at 77° F
12-inch red circular	17	11
12-inch green circular	15	15

For yellow circular signal modules, provide modules tested under the procedures outlined in the VTCSH Circular Supplement to insure power required at 77° F is 22 Watts or less for the 12-inch circular module and 13 Watts.

Note: Use a wattmeter having an accuracy of ±1% to measure the nominal wattage and maximum wattage of a circular traffic signal module. Power may also be derived from voltage, current and power factor measurements.

2. LED Arrow Signal Modules

Provide 12-inch omnidirectional arrow signal modules. All makes and models of LED modules purchased for use on the State Highway System shall appear on the current NCDOT Traffic Signal Qualified Products List (QPL).

Provide the manufacturer's model number and the product number (assigned by the Department) for each module that appears on the 2012 or most recent Qualified Products List. In addition, provide manufacturer's certification in accordance with Article 106-3 of the *Standard Specifications,* that each module meets or exceeds the requirements for 12-inch omnidirectional modules specified in the ITE "Vehicle Traffic Control Signal Heads – Light Emitting Diode (LED) Vehicle Arrow Traffic Signal Supplement" dated July 1, 2007 (hereafter referred to as VTCSH Arrow Supplement) and other requirements stated in this specification.

Provide modules that meet the following requirements when tested under the procedures outlined in the VTCSH Arrow Supplement:

Module Type	Max. Wattage at 165° F	Nominal Wattage at 77° F
12-inch red arrow	12	9
12-inch green arrow	11	11

For yellow arrow signal modules, provide modules tested under the procedures outlined in the VTCSH Arrow Supplement to insure power required at 77° F is 12 Watts or less.

Note: Use a wattmeter having an accuracy of ±1% to measure the nominal wattage and maximum wattage of an arrow traffic signal module. Power may also be derived from voltage, current and power factor measurements.

C. Signal Cable:

Furnish 16-4 and 16-7 signal cable that complies with IMSA specification 20-1 except provide the following conductor insulation colors:

- For 16-4 cable: white, yellow, red, and green
- For 16-7 cable: white, yellow, red, green, yellow with black stripe tracer, red with black stripe tracer, and green with black stripe tracer. Apply continuous stripe tracer on conductor insulation with a longitudinal or spiral pattern.

Provide a ripcord to allow the cable jacket to be opened without using a cutter. IMSA specification 19-1 will not be acceptable. Provide a cable jacket labeled with the IMSA specification number and provide conductors constructed of stranded copper.

D. Louvers:

Material, equipment, and hardware furnished under this section must be pre-approved on the Department's QPL by the date of installation.

Provide louvers made from sheet aluminum. Paint the louvers alkyd urea black synthetic baked enamel with a minimum gloss reflectance and meeting the requirements of MIL-E-10169, "Enamel Heat Resisting, Instrument Black."

Ensure that the louvers have a 0-degree horizontal viewing angle. Provide a minimum of 5 vanes.

2. CONTROLLERS WITH CABINETS

2.1. MATERIALS – TYPE 2070L CONTROLLERS

Conform to CALTRANS *Transportation Electrical Equipment Specifications* (TEES) (dated August 16, 2002, plus Errata 1 dated October 27, 2003 and Errata 2 dated June 08, 2004) except as required herein.

Furnish Model 2070L controllers. Ensure that removal of the CPU module from the controller will place the intersection into flash.

The Department will provide software at the beginning of the burning-in period. Contractor shall give 5 working days notice before needing software. Program software provided by the Department.

Provide model 2070L controllers with the latest version of OS9 operating software and device drivers, composed of the unit chassis and at a minimum the following modules and assemblies:

- MODEL 2070 1B, CPU Module, Single Board
- MODEL 2070-2A, Field I/O Module (FI/O)
- MODEL 2070-3B, Front Panel Module (FP), Display B (8x40)
- MODEL 2070-4A, Power Supply Module, 10 AMP
- MODEL 2070-7A, Async Serial Com Module (9-pin RS-232)

Furnish one additional MODEL 2070-7A, Async Serial Com Module (9-pin RS-232) for all master controller locations.

For each master location and central control center, furnish a U.S. Robotics V.92 or approved equivalent auto-dial/auto-answer external modem to accomplish the interface to the Department-furnished microcomputers. Include all necessary hardware to ensure telecommunications.

2.2. MATERIALS – GENERAL CABINETS

Provide a moisture resistant coating on all circuit boards.

Provide one 20 mm diameter radial lead UL-recognized metal oxide varistor (MOV) between each load switch field terminal and equipment ground. Electrical performance is outlined below.

PROPERTIES OF MOV SURGE PROTECTOR	
Maximum Continuous Applied Voltage at 185° F	150 VAC (RMS) 200 VDC
Maximum Peak 8x20μs Current at 185° F	6500 A
Maximum Energy Rating at 185° F	80 J
Voltage Range 1 mA DC Test at 77° F	212-268 V
Max. Clamping Voltage 8x20μs, 100A at 77° F	395 V
Typical Capacitance (1 MHz) at 77° F	1600 pF

Provide a power line surge protector that is a two-stage device that will allow connection of the radio frequency interference filter between the stages of the device. Ensure that a maximum continuous current is at least 10A at 120V. Ensure that the device can withstand a minimum of 20 peak surge current occurrences at 20,000A for an 8x20 microsecond waveform. Provide a maximum clamp voltage of 395V at 20,000A with a nominal series inductance of 200μh. Ensure that the voltage does not exceed 395V. Provide devices that comply with the following:

Frequency (Hz)	Minimum Insertion Loss (dB)
60	0
10,000	30
50,000	55
100,000	50
500,000	50
2,000,000	60
5,000,000	40
10,000,000	20
20,000,000	25

2.3. MATERIALS – TYPE 170E CABINETS

A. Type 170 E Cabinets General:

Conform to the city of Los Angeles' Specification No. 54-053-08, *Traffic Signal Cabinet Assembly Specification* (dated July 2008), except as required herein.

Furnish model 336S pole mounted cabinets configured for 8 vehicle phases, 4 pedestrian phases, and 6 overlaps. When overlaps are required, provide auxiliary output files for the overlaps. Do not reassign load switches to accommodate overlaps unless shown on electrical details. Provide 336S pole mounted cabinets that are 46" high with 40" high internal rack assemblies.

Provide model 200 load switches, model 222 loop detector sensors, model 252 AC isolators, and model 242 DC isolators according to the electrical details. As a minimum, provide one (1) model 2018 conflict monitor, one (1) model 206L power supply unit, two (2) model 204 flashers, one (1) DC isolator (located in slot I14), and four (4) model 430 flash transfer relays (provide seven (7) model 430 flash transfer relays if auxiliary output file is installed) with each cabinet.

B. Type 170 E Cabinet Electrical Requirements:

Provide a cabinet assembly designed to ensure that upon leaving any cabinet switch or conflict monitor initiated flashing operation, the controller starts up in the programmed start up phases and start up interval.

Furnish two sets of non-fading cabinet wiring diagrams and schematics in a paper envelope or container and placed in the cabinet drawer.

All AC+ power is subject to radio frequency signal suppression.

Provide surge suppression in the cabinet for each type of cabinet device. Provide surge protection for the full capacity of the cabinet input file. Provide surge suppression devices that operate properly over a temperature range of -40° F to +185° F. Ensure the surge suppression devices provide both common and differential modes of protection.

Provide a pluggable power line surge protector that is installed on the back of the PDA (power distribution assembly) chassis to filter and absorb power line noise and switching transients. Ensure the device incorporates LEDs for failure indication and provides a dry relay contact closure for the purpose of remote sensing. Ensure the device meets the following specifications:

- Peak Surge Current (Single pulse, 8x20µs).....20,000A
- Occurrences (8x20µs waveform).....10 minimum @ 20,000A
- Maximum Clamp Voltage.....395VAC
- Operating Current.....15 amps
- Response Time.....< 5 nanoseconds

Provide a loop surge suppressor for each set of loop terminals in the cabinet. Ensure the device meets the following specifications:

- Peak Surge Current (6 times, 8x20µs)
  - (Differential Mode).....400A
  - (Common Mode).....1,000A
- Occurrences (8x20µs waveform).....500 min @ 200A
- Maximum Clamp Voltage
  - (Differential Mode @400A).....35V
  - (Common Mode @1,000A).....35V
- Response Time.....< 5 nanoseconds
- Maximum Capacitance.....35 pF

Provide a data communications surge suppressor for each communications line entering or leaving the cabinet. Ensure the device meets the following specifications:

- Peak Surge Current (Single pulse, 8x20µs).....10,000A

- Occurrences (8x20µs waveform).....100 min @ 2,000A
- Maximum Clamp Voltage.....Rated for equipment protected
- Response Time.....< 1 nanosecond
- Maximum Capacitance.....1,500 pF
- Maximum Series Resistance.....15Ω

Provide a DC signal surge suppressor for each DC input channel in the cabinet. Ensure the device meets the following specifications:

- Peak Surge Current (Single pulse, 8x20µs).....10,000A
- Occurrences (8x20µs waveform).....100 @ 2,000A
- Maximum Clamp Voltage.....30V
- Response Time.....< 1 nanosecond

Provide a 120 VAC signal surge suppressor for each AC+ interconnect signal input. Ensure the device meets the following specifications:

- Peak Surge Current (Single pulse, 8x20µs).....20,000A
- Maximum Clamp Voltage.....350VAC
- Response Time.....< 200 nanoseconds
- Discharge Voltage.....<200 Volts @ 1,000A
- Insulation Resistance.....≥100 MΩ

Provide conductors for surge protection wiring that are of sufficient size (ampacity) to withstand maximum overcurrents which could occur before protective device thresholds are attained and current flow is interrupted.

If additional surge protected power outlets are needed to accommodate fiber transceivers, modems, etc., install a UL listed, industrial, heavy-duty type power outlet strip with a minimum rating of 15 A / 125 VAC, 60 Hz. Provide a strip that has a minimum of 3 grounded outlets. Ensure the power outlet strip plugs into one of the controller unit receptacles located on the rear of the PDA. Ensure power outlet strip is mounted securely; provide strain relief if necessary.

Provide a door switch in the front and a door switch in the rear of the cabinet that will provide the controller unit with a Door Ajar alarm when either the front or the rear door is open. Ensure the door switches apply DC ground to the Input File when either the front door or the rear door is open.

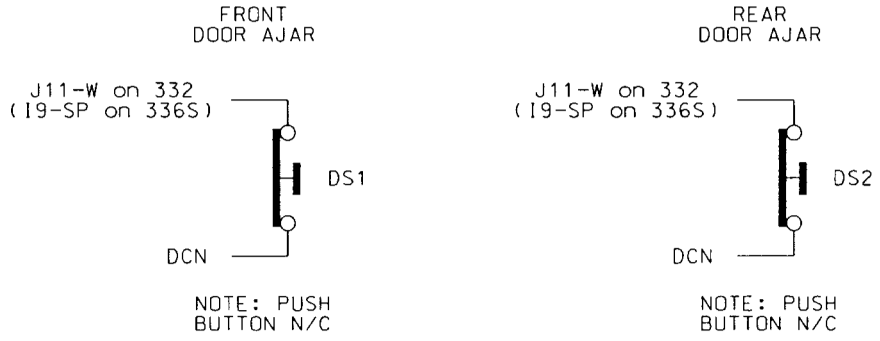

Furnish a fluorescent fixture in the rear across the top of the cabinet and another fluorescent fixture in the front across the top of the cabinet at a minimum. Ensure that the fixtures provide sufficient light to illuminate all terminals, labels, switches, and devices in the cabinet. Conveniently locate the fixtures so as not to interfere with a technician's ability to perform work on any devices or terminals in the cabinet. Provide a protective diffuser to cover exposed bulbs. Install 16 watt T-4 lamps in the fluorescent fixtures. Provide a door switch to provide power to each fixture when the respective door is open. Wire the fluorescent fixtures to the 15 amp ECB (equipment circuit breaker).

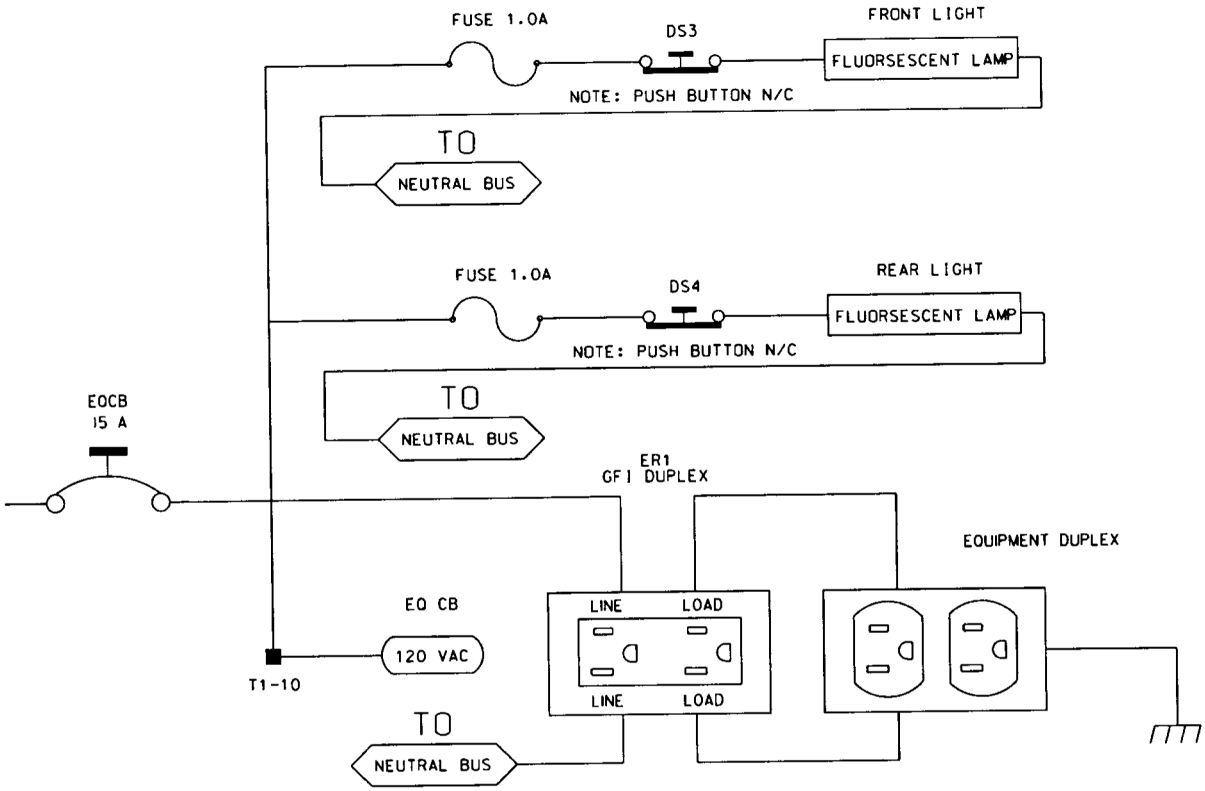

Furnish a police panel with a police panel door. For model 336S cabinets, mount the police panel on the rear door. Ensure that the police panel door permits access to the police panel when the main door is closed. Ensure that no rainwater can enter the cabinet even with the police panel door open. Provide a police panel door hinged on the right side as viewed from the front. Provide a police panel door lock that is keyed to a standard police/fire call box key. In addition to the requirements of LA Specification No. 54-053-08, provide the police panel with a toggle switch connected to switch the intersection operation between normal stop-and-go operation (AUTO) and manual operation (MANUAL). Ensure that manual control can be implemented using inputs and software such that the controller provides full programmed clearance times for the yellow clearance and red clearance for each phase while under manual control.

Provide a 1/4-inch locking phone jack in the police panel for a hand control to manually control the intersection. Provide sufficient room in the police panel for storage of a hand control and cord.

Ensure the 336S cabinet Input File is wired as follows:

336S Cabinet Port-Bit/C-1 Pin Assignment														
Slot #	1	2	3	4	5	6	7	8	9	10	11	12	13	14
C-1 (Spares)	59	60	61	62	63	64	65	66	75	76	77	78	79	80
Port C-1	3-2 56	1-1 39	3-4 58	1-3 41	3-1 55	1-2 40	3-3 57	1-4 42	2-5 51	5-5 71	5-6 72	5-1 67	5-2 68	6-7 81
Port C-1	2-1 47	1-5 43	2-3 49	1-7 45	2-2 48	1-6 44	2-4 50	1-8 46	2-6 52	5-7 73	5-8 74	5-3 69	5-4 70	6-8 82

Provide detector test switches mounted at the top of the cabinet rack or other convenient location which may be used to place a call on each of eight phases based on the chart below. Provide three positions for each switch: On (place call), Off (normal detector operation), and Momentary On (place momentary call and return to normal detector operation after switch is released). Ensure that the switches are located such that the technician can read the controller display and observe the intersection.

Connect detector test switches for cabinets as follows:

336S Cabinet		332 Cabinet	
Detector Call Switches	**Terminals**	**Detector Call Switches**	**Terminals**
Phase 1	I1-F	Phase 1	I1-W
Phase 2	I2-F	Phase 2	I4-W
Phase 3	I3-F	Phase 3	I5-W
Phase 4	I4-F	Phase 4	I8-W
Phase 5	I5-F	Phase 5	J1-W
Phase 6	I6-F	Phase 6	J4-W
Phase 7	I7-F	Phase 7	J5-W
Phase 8	I8-F	Phase 8	J8-W

Provide the PCB 28/56 connector for the conflict monitor unit (CMU) with 28 independent contacts per side, dual-sided with 0.156 inch contact centers. Provide the PCB 28/56 connector contacts with solder eyelet terminations. Ensure all connections to the PCB 28/56 connector are soldered to the solder eyelet terminations.

Ensure that all cabinets have the CMU connector wired according to the 332 cabinet connector pin assignments (include all wires for auxiliary output file connection). Wire pins 13, 16, R, and U of the CMU connector to a separate 4 pin plug, P1, as shown below. Provide a second plug, P2, which will mate with P1 and is wired to the auxiliary output file as shown below. Provide an additional plug, P3, which will mate with P1 and is wired to the pedestrian yellow circuits as shown below. When no auxiliary output file is installed in the cabinet, provide wires for the green and yellow inputs for channels 11, 12, 17, and 18, the red inputs for channels 17 and 18, and the wires for the P2 plug. Terminate the two-foot wires with ring type lugs, insulated, and bundled for optional use.

	P1		P2		P3	
PIN	FUNCTION	CONN TO	FUNCTION	CONN TO	FUNCTION	CONN TO
1	CH-9G	CMU-13	OLA-GRN	A123	2P-YEL	114
2	CH-9Y	CMU-16	OLA-YEL	A122	4P-YEL	105
3	CH-10G	CMU-R	OLB-GRN	A126	6P-YEL	120
4	CH-10Y	CMU-U	OLB-YEL	A125	8P-YEL	111

Connect the P20 terminal assembly (red monitor board) to a connector installed on the front of the type 2018 enhanced conflict monitor through a 3-1/2 foot 20-wire ribbon cable. Ensure that the ribbon cable connector and the connector on the conflict monitor are keyed to ensure proper connection. Ensure that removal of the P20 ribbon cable will cause the conflict monitor to recognize a latching fault condition and place the cabinet into flashing operation.

Wire the P20 connector to the traffic signal red displays to provide inputs to the conflict monitor as shown below. Ensure the pedestrian Don't Walk circuits are wired to channels 13 through 16 of the P20 connector. When no auxiliary output file is installed in the cabinet, provide wires for channels 9 through 12 reds. Terminate the two-foot wires with ring type lugs, insulated, and bundled for optional use.

Pin #	Function	Pin #	Function
1	Channel 15 Red	11	Channel 9 Red
2	Channel 16 Red	12	Channel 8 Red
3	Channel 14 Red	13	Channel 7 Red
4	GND	14	Channel 6 Red
5	Channel 13 Red	15	Channel 5 Red
6	Special Function 2	16	Channel 4 Red
7	Channel 12 Red	17	Channel 3 Red
8	Special Function 1	18	Channel 2 Red
9	Channel 10 Red	19	Channel 1 Red
10	Channel 11 Red	20	Red Enable

Ensure the controller unit outputs to the auxiliary output file are pre-wired to the C5 connector. When no auxiliary output file is installed in the cabinet, connect the C5 connector to a storage socket located on the Input Panel or on the rear of the PDA.

In addition to the requirements of LA Specification No. 54-053-08, ensure relay K1 on the Power Distribution Assembly (PDA) is a four pole relay and K2 on the PDA is a two pole relay.

Provide a two pole, ganged circuit breaker for the flash bus circuit. Ensure the flash bus circuit breaker is an inverse time circuit breaker rated for 10 amps at 120 VAC with a minimum of 10,000 RMS symmetrical amperes short circuit current rating. Do not provide the auxiliary switch feature on the flash bus circuit breaker. Ensure the ganged flash bus circuit breaker is certified by the circuit breaker manufacturer to provide gang tripping operation.

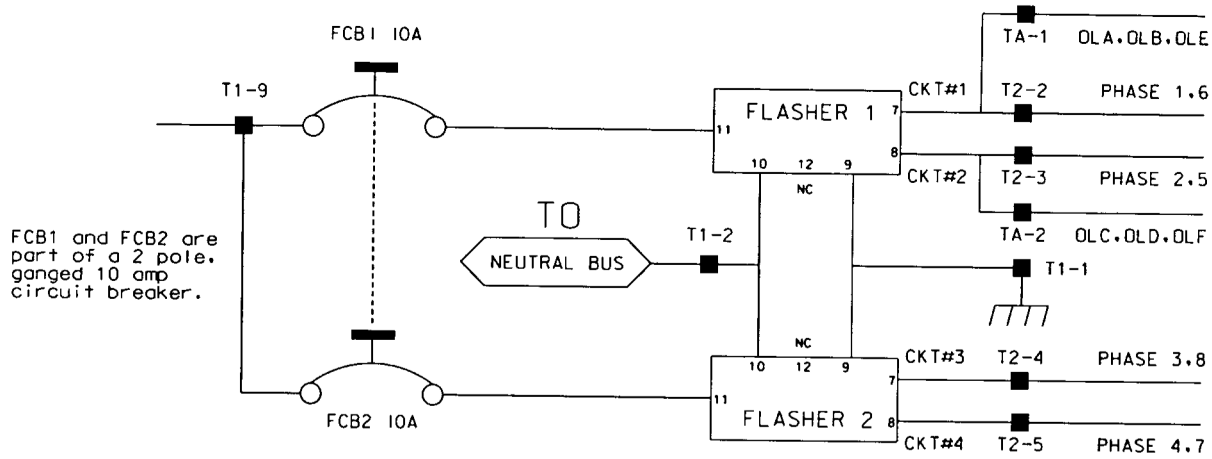

Ensure auxiliary output files are wired as follows:

AUXILIARY OUTPUT FILE TERMINAL BLOCK TA ASSIGNMENTS	
POSITION	**FUNCTION**
1	Flasher Unit #1, Circuit 1/FTR1 (OLA, OLB)/FTR3 (OLE)
2	Flasher Unit #1, Circuit 2/FTR2 (OLC, OLD)/FTR3 (OLF)
3	Flash Transfer Relay Coils
4	AC -
5	Power Circuit 5
6	Power Circuit 5
7	Equipment Ground Bus
8	NC

Provide four spare load resistors mounted in each cabinet. Ensure each load resistor is rated as shown in the table below. Wire one side of each load resistor to AC-. Connect the other side of each resistor to a separate terminal on a four (4) position terminal block. Mount the load resistors and terminal block either inside the back of Output File No. 1 or on the upper area of the Service Panel.

ACCEPTABLE LOAD RESISTOR VALUES	
VALUE (ohms)	**WATTAGE**
1.5K – 1.9 K	25W (min)
2.0K – 3.0K	10W (min)

Provide Model 200 load switches, Model 204 flashers, Model 242 DC isolators, Model 252 AC isolators, and Model 206L power supply units that conform to CALTRANS' "*Transportation Electrical Equipment Specifications*" dated March 12, 2009 with Erratum 1.

C. Type 170 E Cabinet Physical Requirements:

Do not mold, cast, or scribe the name "City of Los Angeles" on the outside of the cabinet door as specified in LA Specification No. 54-053-08. Do not provide a Communications Terminal Panel as specified in LA Specification No. 54-053-08. Do not provide terminal block TBB on the Service Panel. Do not provide Cabinet Verification Test Program software or associated test jigs as specified in LA Specification No. 54-053-08.

Furnish unpainted, natural, aluminum cabinet shells. Ensure that all non-aluminum hardware on the cabinet is stainless steel or a Department approved non-corrosive alternate.

Ensure the lifting eyes, gasket channels, police panel, and all supports welded to the enclosure and doors are fabricated from 0.125 inch minimum thickness aluminum sheet and meet the same standards as the cabinet and doors.

Provide front and rear doors with latching handles that allow padlocking in the closed position. Furnish 0.75 inch minimum diameter stainless steel handles with a minimum 0.5 inch shank. Place the padlocking attachment at 4.0 inches from the handle shank center to clear the lock and key. Provide an additional 4.0 inches minimum gripping length.

Provide Corbin #2 locks on the front and rear doors. Provide one (1) Corbin #2 and one (1) police master key with each cabinet. Ensure main door locks allow removal of keys in the locked position only.

Provide a surge protection panel with 16 loop surge protection devices and designed to allow sufficient free space for wire connection/disconnection and surge protection device replacement. For model 332 cabinets, provide an additional 20 loop surge protection devices. Provide an additional two AC+ interconnect surge devices to protect one slot and eight DC surge protection devices to protect four slots. Provide no protection devices on slot I14.

For pole mounted cabinets, mount surge protection devices for the AC+ interconnect inputs, inductive loop detector inputs, and low voltage DC inputs on a swing down panel assembly fabricated from sturdy aluminum. Attach the swing down panel to the bottom rear cabinet rack assembly using thumb screws. Ensure the swing down panel allows for easy removal of the input file without removing the surge protection panel assembly or its parts. Have the surge protection devices mounted horizontally on the panel and soldered to the feed through terminals of four 14 position terminal blocks with #8 screws mounted on the other side. Ensure the top row of terminals is connected to the upper slots and the bottom row of terminals is connected to the bottom slots. Provide a 15 position copper equipment ground bus attached to the field terminal side (outside) of the swing down panel for termination of loop lead-in shield grounds. Ensure that a Number 4 AWG green wire connects the surge protection panel assembly ground bus to the main cabinet equipment ground.

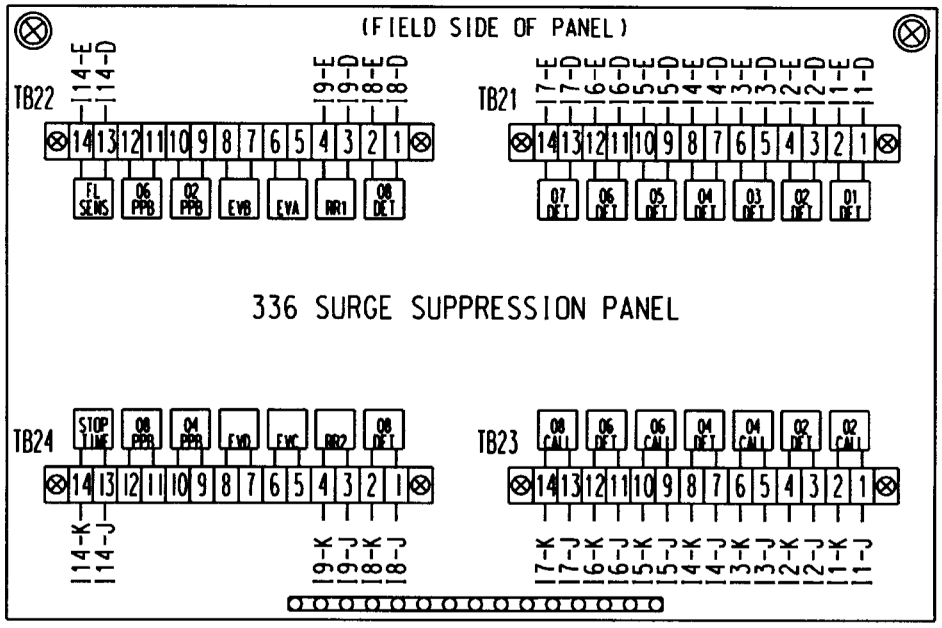

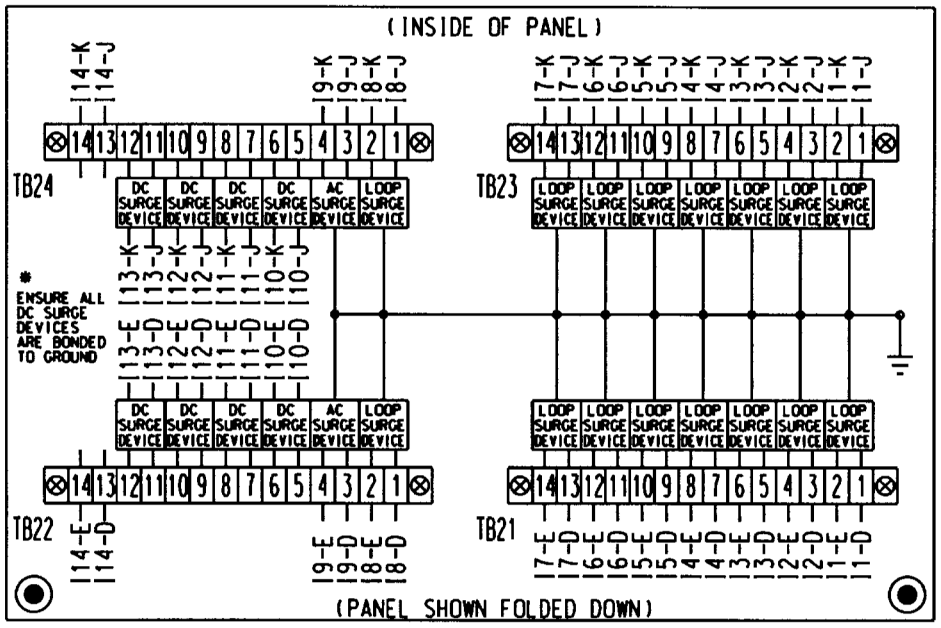

Provide permanent labels that indicate the slot and the pins connected to each terminal that may be viewed from the rear cabinet door. Label and orient terminals so that each pair of inputs is next to each other. Indicate on the labeling the input file (I or J), the slot number (1-14) and the terminal pins of the input slots (either D & E for upper or J & K for lower).

Provide a minimum 14 x 16 inch pull out, hinged top shelf located immediately below controller mounting section of the cabinet. Ensure the shelf is designed to fully expose the table surface outside the controller at a height approximately even with the bottom of the controller. Ensure the shelf has a storage bin interior which is a minimum of 1 inch deep and approximately the same dimensions as the shelf. Provide an access to the storage area by lifting the hinged top of the shelf. Fabricate the

shelf and slide from aluminum or stainless steel and ensure the assembly can support the 2070L controller plus 15 pounds of additional weight. Ensure shelf has a locking mechanism to secure it in the fully extended position and does not inhibit the removal of the 2070L controller or removal of cards inside the controller when fully extended. Provide a locking mechanism that is easily released when the shelf is to be returned to its non-use position directly under the controller.

D. Model 2018 Enhanced Conflict Monitor:

Furnish Model 2018 Enhanced Conflict Monitors that provide monitoring of 18 channels. Ensure each channel consists of a green, yellow, and red field signal input. Ensure that the conflict monitor meets or exceeds CALTRANS' Transportation Electrical Equipment Specifications dated March 12, 2009 with Erratum 1 (hereafter referred to as CALTRANS' 2009 TEES) for a model 210 monitor unit and other requirements stated in this specification.

Ensure the conflict monitor is provided with an 18 channel conflict programming card. Pin EE and Pin T of the conflict programming card shall be connected together. Pin 16 of the conflict programming card shall be floating. Ensure that the absence of the conflict programming card will cause the conflict monitor to trigger (enter into fault mode), and remain in the triggered state until the programming card is properly inserted and the conflict monitor is reset.

Provide a conflict monitor that incorporates LED indicators into the front panel to dynamically display the status of the monitor under normal conditions and to provide a comprehensive review of field inputs with monitor status under fault conditions. Ensure that the monitor indicates the channels that were active during a conflict condition and the channels that experienced a failure for all other per channel fault conditions detected. Ensure that these indications and the status of each channel are retained until the Conflict Monitor is reset. Furnish LED indicators for the following:

- AC Power (Green LED indicator)
- VDC Failed (Red LED indicator)
- WDT Error (Red LED indicator)
- Conflict (Red LED indicator)
- Red Fail (Red LED indicator)
- Dual Indication (Red LED indicator)
- Yellow/Clearance Failure (Red LED indicator)
- PCA/PC Ajar (Red LED indicator)
- Monitor Fail/Diagnostic Failure (Red LED indicator)
- 54 Channel Status Indicators (1 Red, 1 Yellow, and 1 Green LED indicator for each of the 18 channels)

Provide a switch to set the Red Fail fault timing. Ensure that when the switch is in the ON position the Red Fail fault timing value is set to 1350 +/- 150ms (2018 mode). Ensure that when the switch is in the OFF position the Red Fail fault timing value is set to 850 +/- 150ms (210 mode).

Provide a switch to set the Watchdog fault timing. Ensure that when the switch is in the ON position the Watchdog fault timing value is set to 1.0 +/- 0.1s (2018 mode). Ensure that when the switch is in the OFF position the Watchdog fault timing value is set to 1.5 +/- 0.1s (210 mode).

Provide a jumper or switch to set the AC line brown-out levels. Ensure that when the jumper is present or the switch is in the ON position the AC line dropout voltage threshold is 98 +/- 2 Vrms, the AC line restore voltage threshold is 103 +/- 2 Vrms, and the AC line brown-out timing value is set to 400 +/- 50ms (2018 mode). Ensure that when the jumper is not present or the switch is in the

OFF position the AC line dropout voltage threshold is 92 +/- 2 Vrms, the AC line restore voltage threshold is 98 +/- 2 Vrms, and the AC line brown-out timing value is set to 80 +/- 17ms (210 mode).

Provide a jumper or switch that will enable and disable the Watchdog Latch function. Ensure that when the jumper is not present or the switch is in the OFF position the Watchdog Latch function is disabled. In this mode of operation, a Watchdog fault will be reset following a power loss, brownout, or power interruption. Ensure that when the jumper is present or the switch is in the ON position the Watchdog Latch function is enabled. In this mode of operation, a Watchdog fault will be retained until a Reset command is issued.

Provide a jumper that will reverse the active polarity for pin #EE (output relay common). Ensure that when the jumper is not present pin #EE (output relay common) will be considered 'Active' at a voltage greater than 70 Vrms and 'Not Active' at a voltage less than 50 Vrms (Caltrans mode). Ensure that when the jumper is present pin #EE (output relay common) will be considered 'Active' at a voltage less than 50 Vrms and 'Not Active' at a voltage greater than 70 Vrms (Failsafe mode).

In addition to the connectors required by CALTRANS' 2009 TEES, provide the conflict monitor with a red interface connector mounted on the front of the monitor. Ensure the connector is a 20 pin, right angle, male connector with latching clip locks and polarizing keys. Ensure the right angle solder tails are designed for a 0.062" thick printed circuit board. Keying of the connector shall be between pins 3 and 5, and between 17 and 19. Ensure the connector has two rows of pins with the odd numbered pins on one row and the even pins on the other row. Ensure the connector pin row spacing is 0.10" and pitch is 0.10". Ensure the mating length of the connector pins is 0.24". Ensure the pins are finished with gold plating 30μ" thick.

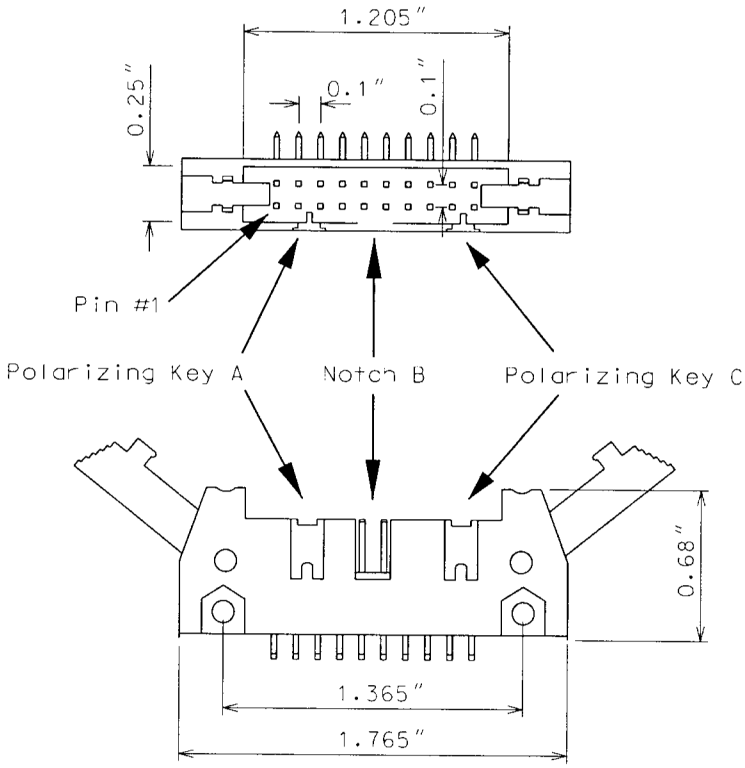

Ensure the red interface connector pins on the monitor have the following functions:

Pin #	Function	Pin #	Function
1	Channel 15 Red	2	Channel 16 Red
3	Channel 14 Red	4	Chassis Ground
5	Channel 13 Red	6	Special Function 2
7	Channel 12 Red	8	Special Function 1
9	Channel 10 Red	10	Channel 11 Red
11	Channel 9 Red	12	Channel 8 Red
13	Channel 7 Red	14	Channel 6 Red
15	Channel 5 Red	16	Channel 4 Red
17	Channel 3 Red	18	Channel 2 Red
19	Channel 1 Red	20	Red Enable

Ensure that the removal of the P-20 red interface ribbon cable will cause the monitor to recognize a latching fault condition and place the cabinet into flashing operation.

Provide Special Function 1 and Special Function 2 inputs to the unit which shall disable only Red Fail Monitoring when either input is sensed active. A Special Function input shall be sensed active when the input voltage exceeds 70 Vrms with a minimum duration of 550 ms. A Special Function input shall be sensed not active when the input voltage is less than 50 Vrms or the duration is less than 250 ms. A Special Function input is undefined by these specifications and may or may not be sensed active when the input voltage is between 50 Vrms and 70 Vrms or the duration is between 250 ms and 550 ms.

Ensure the conflict monitor recognizes field signal inputs for each channel that meet the following requirements:

- consider a Red input greater than 70 Vrms and with a duration of at least 500 ms as an "on" condition;
- consider a Red input less than 50 Vrms or with a duration of less than 200 ms as an "off" condition (no valid signal);
- consider a Red input between 50 Vrms and 70 Vrms or with a duration between 200 ms and 500 ms to be undefined by these specifications;
- consider a Green or Yellow input greater than 25 Vrms and with a duration of at least 500 ms as an "on" condition;
- consider a Green or Yellow input less than 15 Vrms or with a duration of less than 200 ms as an "off" condition; and
- consider a Green or Yellow input between 15 Vrms and 25 Vrms or with a duration between 200 ms and 500 ms to be undefined by these specifications.

Provide a conflict monitor that recognizes the faults specified by CALTRANS' 2009 TEES and the following additional faults. Ensure the conflict monitor will trigger upon detection of a fault and will remain in the triggered (in fault mode) state until the unit is reset at the front panel or through the external remote reset input for the following failures:

1. **Red Monitoring or Absence of Any Indication (Red Failure):** A condition in which no "on" voltage signal is detected on any of the green, yellow, or red inputs to a given monitor channel. If a signal is not detected on at least one input (R, Y, or G) of a conflict monitor channel for a period greater than 1000 ms when used with a 170 controller and 1500 ms when used with a 2070L controller, ensure monitor will trigger and put the intersection into flash. If the absence of any indication condition lasts less that 750 ms when used with a 170 controller and 1200 ms when used with a 2070L controller, ensure conflict monitor will not trigger. Red fail monitoring shall be enabled on a per channel basis by the use of switches

located on the conflict monitor. Have red monitoring occur when all of the following input conditions are in effect:

a) Red Enable input to monitor is active (Red Enable voltages are "on" at greater than 70 Vrms, off at less than 50 Vrms, undefined between 50 and 70 Vrms), and

b) Neither Special Function 1 nor Special Function 2 inputs are active.

c) Pin #EE (output relay common) is not active

2. **Short/Missing Yellow Indication Fault (Clearance Error):** Yellow indication following a green is missing or shorter than 2.7 seconds (with ± 0.1-second accuracy). If a channel fails to detect an "on" signal at the Yellow input for a minimum of 2.7 seconds (± 0.1 second) following the detection of an "on" signal at a Green input for that channel, ensure that the monitor triggers and generates a clearance/short yellow error fault indication. Short/missing yellow (clearance) monitoring shall be enabled on a per channel basis by the use of switches located on the conflict monitor. This fault shall not occur when the channel is programmed for Yellow Inhibit, when the Red Enable signal is inactive or pin #EE (output relay common) is active.
3. **Dual Indications on the Same Channel:** In this condition, more than one indication (R,Y,G) is detected as "on" at the same time on the same channel. If dual indications are detected for a period greater than 500 ms, ensure that the conflict monitor triggers and displays the proper failure indication (Dual Ind fault). If this condition is detected for less than 200 ms, ensure that the monitor does not trigger. G-Y-R dual indication monitoring shall be enabled on a per channel basis by the use of switches located on the conflict monitor. G-Y dual indication monitoring shall be enabled for all channels by use of a switch located on the conflict monitor. This fault shall not occur when the Red Enable signal is inactive or pin #EE (output relay common) is active.
4. **Configuration Settings Change:** The configuration settings are comprised of (as a minimum) the permissive diode matrix, dual indication switches, yellow disable jumpers, any option switches, any option jumpers, and the Watchdog Enable switch. Ensure the conflict monitor compares the current configuration settings with the previous stored configuration settings on power-up, on reset, and periodically during operation. If any of the configuration settings are changed, ensure that the conflict monitor triggers and causes the program card indicator to flash. Ensure that configuration change faults are only reset by depressing and holding the front panel reset button for a minimum of three seconds. Ensure the external remote reset input does not reset configuration change faults.

Ensure the conflict monitor will trigger and the AC Power indicator will flash at a rate of 2 Hz ± 20% with a 50% duty cycle when the AC Line voltage falls below the "drop-out" level. Ensure the conflict monitor will resume normal operation when the AC Line voltage returns above the "restore" level. Ensure the AC Power indicator will remain illuminated when the AC voltage returns above the "restore" level. Should an AC Line power interruption occur while the monitor is in the fault mode, then upon restoration of AC Line power, the monitor will remain in the fault mode and the correct fault and channel indicators will be displayed.

Provide a flash interval of at least 6 seconds and at most 10 seconds in duration following a power-up, an AC Line interruption, or a brownout restore. Ensure the conflict monitor will suspend all fault monitoring functions, close the Output relay contacts, and flash the AC indicator at a rate of 4 Hz ± 20% with a 50% duty cycle during this interval. Ensure the termination of the flash interval after at least 6 seconds if the Watchdog input has made 5 transitions between the True and False

state and the AC Line voltage is greater than the "restore" level. If the watchdog input has not made 5 transitions between the True and False state within 10 ± 0.5 seconds, the monitor shall enter a WDT error fault condition.

Ensure the conflict monitor will monitor an intersection with a minimum of four approaches using the four-section Flashing Yellow Arrow (FYA) vehicle traffic signal as outlined by the NCHRP 3-54 research project for protected-permissive left turn signal displays. Ensure the conflict monitor will operate in the FYA mode and FYAc (Compact) mode as specified below to monitor each channel for the following fault conditions: Conflict, Red Fail, Dual Indication, and Clearance. Provide a switch to select between the FYA mode and FYAc mode. Provide a switch to select each FYA phase movement for monitoring.

FYA mode

FYA Signal Head	Phase 1	Phase 3	Phase 5	Phase 7
Red Arrow	Channel 9 Red	Channel 10 Red	Channel 11 Red	Channel 12 Red
Yellow Arrow	Channel 9 Yellow	Channel 10 Yellow	Channel 11 Yellow	Channel 12 Yellow
Flashing Yellow Arrow	Channel 9 Green	Channel 10 Green	Channel 11 Green	Channel 12 Green
Green Arrow	Channel 1 Green	Channel 3 Green	Channel 5 Green	Channel 7 Green

FYAc mode

FYA Signal Head	Phase 1	Phase 3	Phase 5	Phase 7
Red Arrow	Channel 1 Red	Channel 3 Red	Channel 5 Red	Channel 7 Red
Yellow Arrow	Channel 1 Yellow	Channel 3 Yellow	Channel 5 Yellow	Channel 7 Yellow
Flashing Yellow Arrow	Channel 1 Green	Channel 3 Green	Channel 5 Green	Channel 7 Green
Green Arrow	Channel 9 Green	Channel 9 Yellow	Channel 10 Green	Channel 10 Yellow

Ensure that the conflict monitor will log at least nine of the most recent events detected by the monitor in non-volatile EEPROM memory (or equivalent). For each event, record at a minimum the time, date, type of event, status of each field signal indication with RMS voltage, and specific channels involved with the event. Ensure the conflict monitor will log the following events: monitor reset, configuration, previous fault, and AC line. Furnish the signal sequence log that shows all channel states (Greens, Yellows, and Reds) and the Red Enable State for a minimum of 2 seconds prior to the current fault trigger point. Ensure the display resolution of the inputs for the signal sequence log is not greater than 50 ms.

Provide a RS-232C/D compliant port (DB-9 female connector) on the front panel of the conflict monitor in order to provide communications from the conflict monitor to the 170/2070L controller or

to a Department-furnished laptop computer. Electrically isolate the port interface electronics from all monitor electronics, excluding Chassis Ground. Ensure that the controller can receive all event log information through a controller Asynchronous Communications Interface Adapter (Type 170E) or Async Serial Comm Module (2070L). Provide a Windows based graphic user interface software to communicate directly through the same monitor RS-232C/D compliant port to retrieve and view all event log information to a Department-furnished laptop computer. The RS-232C/D compliant port on the monitor shall allow the monitor to function as a DCE device with pin connections as follows:

Conflict Monitor RS-232C/D (DB-9 Female) Pinout		
Pin Number	**Function**	**I/O**
1	DCD	O
2	TX Data	O
3	RX Data	I
4	DTR	I
5	Ground	-
6	DSR	O
7	CTS	I
8	RTS	O
9	NC	-

MONITOR BOARD EDGE CONNECTOR

Pin #	Function (Back Side)	Pin #	Function (Component Side)
1	Channel 2 Green	A	Channel 2 Yellow
2	Channel 13 Green	B	Channel 6 Green
3	Channel 6 Yellow	C	Channel 15 Green
4	Channel 4 Green	D	Channel 4 Yellow
5	Channel 14 Green	E	Channel 8 Green
6	Channel 8 Yellow	F	Channel 16 Green
7	Channel 5 Green	H	Channel 5 Yellow
8	Channel 13 Yellow	J	Channel 1 Green
9	Channel 1 Yellow	K	Channel 15 Yellow
10	Channel 7 Green	L	Channel 7 Yellow
11	Channel 14 Yellow	M	Channel 3 Green
12	Channel 3 Yellow	N	Channel 16 Yellow
13	Channel 9 Green	P	Channel 17 Yellow
14	Channel 17 Green	R	Channel 10 Green
15	Channel 11 Yellow	S	Channel 11 Green
16	Channel 9 Yellow	T	Channel 18 Yellow
17	Channel 18 Green	U	Channel 10 Yellow
--		--	
18	Channel 12 Yellow	V	Channel 12 Green
19	Channel 17 Red	W	Channel 18 Red
20	Chassis Ground	X	Not Assigned
21	AC-	Y	DC Common
22	Watchdog Timer	Z	External Test Reset
23	+24VDC	AA	+24VDC
24	Tied to Pin 25	BB	Stop Time (Output)
25	Tied to Pin 24	CC	Not Assigned
26	Not Assigned	DD	Not Assigned
27	Relay Output, Side #3, N.O.	EE	Relay Output,Side #2,Common
28	Relay Output, Side #1, N.C.	FF	AC+

-- Slotted for keying between Pins 17/U and 18/V

CONFLICT PROGRAM CARD PIN ASSIGNMENTS

Pin #	Function (Back Side)	Pin #	Function (Component Side)
1	Channel 2 Green	A	Channel 1 Green
2	Channel 3 Green	B	Channel 2 Green
3	Channel 4 Green	C	Channel 3 Green
4	Channel 5 Green	D	Channel 4 Green
5	Channel 6 Green	E	Channel 5 Green
6	Channel 7 Green	F	Channel 6 Green
7	Channel 8 Green	H	Channel 7 Green
8	Channel 9 Green	J	Channel 8 Green
9	Channel 10 Green	K	Channel 9 Green
10	Channel 11 Green	L	Channel 10 Green
11	Channel 12 Green	M	Channel 11 Green
12	Channel 13 Green	N	Channel 12 Green
13	Channel 14 Green	P	Channel 13 Green
14	Channel 15 Green	R	Channel 14 Green
15	Channel 16 Green	S	Channel 15 Green
16	N/C	T	PC AJAR
17	Channel 1 Yellow	U	Channel 9 Yellow
18	Channel 2 Yellow	V	Channel 10 Yellow
19	Channel 3 Yellow	W	Channel 11 Yellow
20	Channel 4 Yellow	X	Channel 12 Yellow
21	Channel 5 Yellow	Y	Channel 13 Yellow
22	Channel 6 Yellow	Z	Channel 14 Yellow
23	Channel 7 Yellow	AA	Channel 15 Yellow
24	Channel 8 Yellow	BB	Channel 16 Yellow
--		--	
25	Channel 17 Green	CC	Channel 17 Yellow
26	Channel 18 Green	DD	Channel 18 Yellow
27	Channel 16 Green	EE	PC AJAR (Program Card)
28	Yellow Inhibit Common	FF	Channel 17 Green

-- Slotted for keying between Pins 24/BB and 25/CC

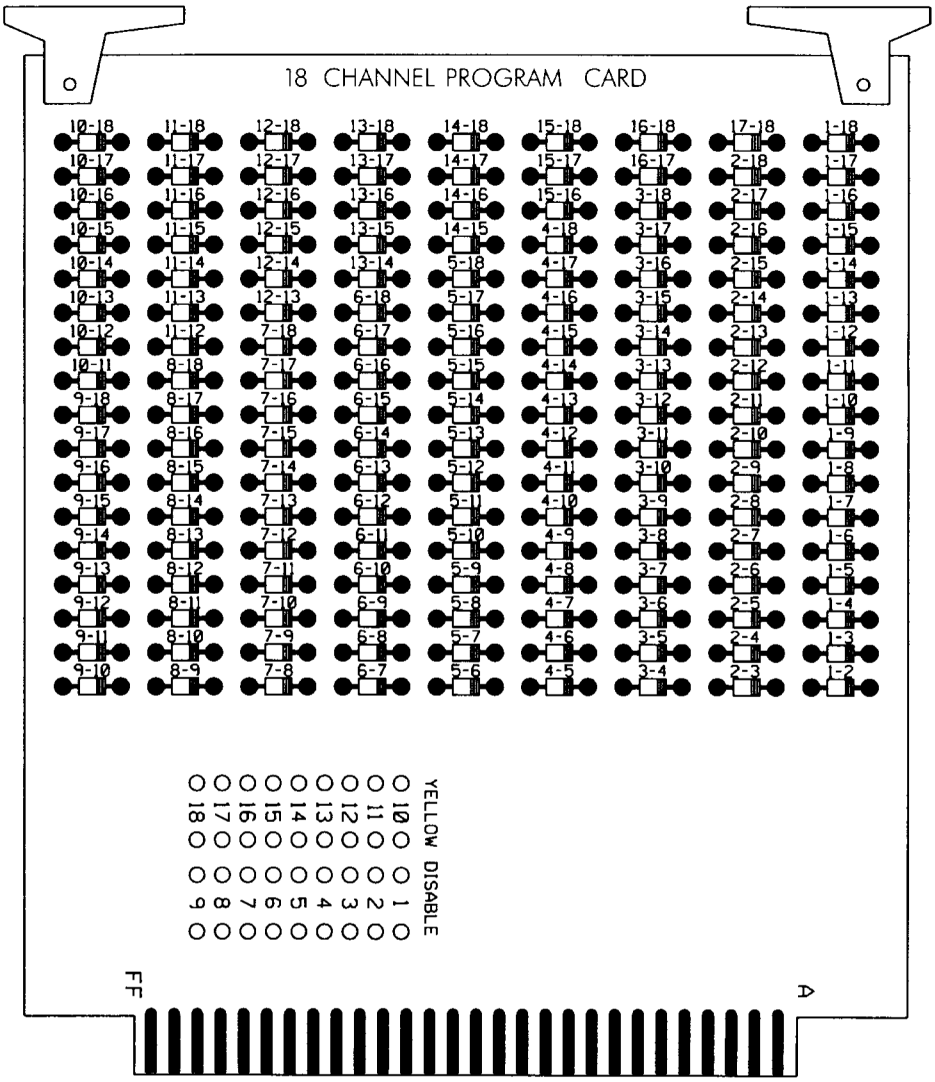
18 CHANNEL PROGRAM CARD
10-18 11-18 12-18 13-18 14-18 15-18 16-18 17-18 1-18
10-17 11-17 12-17 13-17 14-17 15-17 16-17 2-18 1-17
10-16 11-16 12-16 13-16 14-16 15-16 3-18 2-17 1-16
10-15 11-15 12-15 13-15 14-15 4-18 3-17 2-16 1-15
10-14 11-14 12-14 13-14 5-18 4-17 3-16 2-15 1-14
10-13 11-13 12-13 6-18 5-17 4-16 3-15 2-14 1-13
10-12 11-12 7-18 6-17 5-16 4-15 3-14 2-13 1-12
10-11 8-18 7-17 6-16 5-15 4-14 3-13 2-12 1-11
9-18 8-17 7-16 6-15 5-14 4-13 3-12 2-11 1-10
9-17 8-16 7-15 6-14 5-13 4-12 3-11 2-10 1-9
9-16 8-15 7-14 6-13 5-12 4-11 3-10 2-9 1-8
9-15 8-14 7-13 6-12 5-11 4-10 3-9 2-8 1-7
9-14 8-13 7-12 6-11 5-10 4-9 3-8 2-7 1-6
9-13 8-12 7-11 6-10 5-9 4-8 3-7 2-6 1-5
9-12 8-11 7-10 6-9 5-8 4-7 3-6 2-5 1-4
9-11 8-10 7-9 6-8 5-7 4-6 3-5 2-4 1-3
9-10 8-9 7-8 6-7 5-6 4-5 3-4 2-3 1-2
YELLOW DISABLE
10 11 12 13 14 15 16 17 18
1 2 3 4 5 6 7 8 9
FF
A

ERRATA

(1-17-12) (Rev. 9-18-12) Z-4

Revise the *2012 Standard Specifications* as follows:

Division 2

Page 2-7, line 31, Article 215-2 Construction Methods, replace "Article 107-26" with "Article 107-25".
Page 2-17, Article 226-3, Measurement and Payment, line 2, delete "pipe culverts,".
Page 2-20, Subarticle 230-4(B), Contractor Furnished Sources, change references as follows: Line 1, replace "(4) Buffer Zone" with "(c) Buffer Zone"; **Line 12,** replace "(5) Evaluation for Potential Wetlands and Endangered Species" with "(d) Evaluation for Potential Wetlands and Endangered Species"; and **Line 33,** replace "(6) Approval" with "(4) Approval".

Division 4

Page 4-77, line 27, Subarticle 452-3(C) Concrete Coping, replace "sheet pile" with "reinforcement".

Division 6

Page 6-7, line 31, Article 609-3 Field Verification of Mixture and Job Mix Formula Adjustments, replace "30" with "45".
Page 6-10, line 42, Subarticle 609-6(C)(2), replace "Subarticle 609-6(E)" with "Subarticle 609-6(D)".
Page 6-11, Table 609-1 Control Limits, replace "Max. Spec. Limit" for the Target Source of $P_{0.075}/P_{be}$ Ratio with "1.0".
Page 6-40, Article 650-2 Materials, replace "Subarticle 1012-1(F)" with "Subarticle 1012-1(E)"

Division 10

Page 10-74, Table 1056-1 Geotextile Requirements, replace "50%" for the UV Stability (Retained Strength) of Type 5 geotextiles with "70%".

Division 12

Page 12-7, Table 1205-3, add "FOR THERMOPLASTIC" to the end of the title.
Page 12-8, Subarticle 1205-5(B), line 13, replace "Table 1205-2" with "Table 1205-4".
Page 12-8, Table 1205-4 and 1205-5, replace "THERMOPLASTIC" in the title of these tables with "POLYUREA".
Page 12-9, Subarticle 1205-6(B), line 21, replace "Table 1205-4" with "Table 1205-6".
Page 12-11, Subarticle 1205-8(C), line 25, replace "Table 1205-5" with "Table 1205-7".

Division 15

Page 15-6, Subarticle 1510-3(B), after line 21, replace the allowable leakage formula with the following: $W = LD\sqrt{P} + 148{,}000$
Page 15-6, Subarticle 1510-3(B), line 32, delete "may be performed concurrently or" and replace with "shall be performed".
Page 15-17, Subarticle 1540-3(E), line 27, delete "Type 1".

Division 17

Page 17-26, line 42, Subarticle 1731-3(D) Termination and Splicing within Interconnect Center, delete this subarticle.

Revise the *2012 Roadway Standard Drawings* as follows:

1633.01 Sheet 1 of 1, English Standard Drawing for Matting Installation, replace "1633.01" with "1631.01".

MINIMUM WAGES

(7-21-09) Z-5

FEDERAL: The Fair Labor Standards Act provides that with certain exceptions every employer shall pay wages at the rate of not less than SEVEN DOLLARS AND TWENTY FIVE CENTS ($7.25) per hour.

STATE: The North Carolina Minimum Wage Act provides that every employer shall pay to each of his employees, wages at a rate of not less than SEVEN DOLLARS AND TWENTY FIVE CENTS ($7.25) per hour.

The minimum wage paid to all skilled labor employed on this contract shall be SEVEN DOLLARS AND TWENTY FIVE CENTS ($7.25) per hour.

The minimum wage paid to all intermediate labor employed on this contract shall be SEVEN DOLLARS AND TWENTY FIVE CENTS ($7.25) per hour.

The minimum wage paid to all unskilled labor on this contract shall be SEVEN DOLLARS AND TWENTY FIVE CENTS ($7.25) per hour.

This determination of the intent of the application of this act to the contract on this project is the responsibility of the Contractor.

The Contractor shall have no claim against the Department of Transportation for any changes in the minimum wage laws, Federal or State. It is the responsibility of the Contractor to keep fully informed of all Federal and State Laws affecting his contract.

ON-THE-JOB TRAINING

(10-16-07) (Rev. 5-21-13) Z-10

Description

The North Carolina Department of Transportation will administer a custom version of the Federal On-the-Job Training (OJT) Program, commonly referred to as the Alternate OJT Program. All contractors (existing and newcomers) will be automatically placed in the Alternate Program. Standard OJT requirements typically associated with individual projects will no longer be applied at the project level. Instead, these requirements will be applicable on an annual basis for each contractor administered by the OJT Program Manager.

On the Job Training shall meet the requirements of 23 CFR 230.107 (b), 23 USC – Section 140, this provision and the On-the-Job Training Program Manual.

The Alternate OJT Program will allow a contractor to train employees on Federal, State and privately funded projects located in North Carolina. However, priority shall be given to training employees on NCDOT Federal-Aid funded projects.

Minorities and Women

Developing, training and upgrading of minorities and women toward journeyman level status is a primary objective of this special training provision. Accordingly, the Contractor shall make every effort to enroll minority and women as trainees to the extent that such persons are available within a reasonable area of recruitment. This training commitment is not intended, and shall not be used, to discriminate against any applicant for training, whether a member of a minority group or not.

Assigning Training Goals

The Department, through the OJT Program Manager, will assign training goals for a calendar year based on the contractors' past three years' activity and the contractors' anticipated upcoming year's activity with the Department.

At the beginning of each year, all contractors eligible will be contacted by the Department to determine the number of trainees that will be assigned for the upcoming calendar year. At that time the Contractor shall enter into an agreement with the Department to provide a self-imposed on-the-job training program for the calendar year. This agreement will include a specific number of annual training goals agreed to by both parties. The number of training assignments may range from 1 to 15 per contractor per calendar year. The Contractor shall sign an agreement to fulfill their annual goal for the year. A sample agreement is available at www.ncbowd.com/section/on-the-job-training.

Training Classifications

The Contractor shall provide on-the-job training aimed at developing full journeyman level workers in the construction craft/operator positions. Preference shall be given to providing training in the following skilled work classifications:

Equipment Operators	Office Engineers
Truck Drivers	Estimators
Carpenters	Iron / Reinforcing Steel Workers
Concrete Finishers	Mechanics
Pipe Layers	Welders

The Department has established common training classifications and their respective training requirements that may be used by the contractors. However, the classifications established are not all-inclusive. Where the training is oriented toward construction applications, training will be allowed in lower-level management positions such as office engineers and estimators. Contractors shall submit new classifications for specific job functions that their employees are performing. The Department will review and recommend for acceptance to FHWA the new classifications proposed by contractors, if applicable. New classifications shall meet the following requirements:

Proposed training classifications are reasonable and realistic based on the job skill classification needs, and

The number of training hours specified in the training classification is consistent with common practices and provides enough time for the trainee to obtain journeyman level status.

The Contractor may allow trainees to be trained by a subcontractor provided that the Contractor retains primary responsibility for meeting the training and this provision is made applicable to the subcontract. However, only the Contractor will receive credit towards the annual goal for the trainee.

Where feasible, 25 percent of apprentices or trainees in each occupation shall be in their first year of apprenticeship or training. The number of trainees shall be distributed among the work classifications on the basis of the contractor's needs and the availability of journeymen in the various classifications within a reasonable area of recruitment.

No employee shall be employed as a trainee in any classification in which they have successfully completed a training course leading to journeyman level status or in which they have been employed as a journeyman.

Records and Reports

The Contractor shall maintain enrollment, monthly and completion reports documenting company compliance under these contract documents. These documents and any other information as requested shall be submitted to the OJT Program Manager.

Upon completion and graduation of the program, the Contractor shall provide each trainee with a certification Certificate showing the type and length of training satisfactorily completed.

Trainee Interviews

All trainees enrolled in the program will receive an initial and Trainee/Post graduate interview conducted by the OJT program staff.

Trainee Wages

Contractors shall compensate trainees on a graduating pay scale based upon a percentage of the prevailing minimum journeyman wages (Davis-Bacon Act). Minimum pay shall be as follows:

60 percent	of the journeyman wage for the first half of the training period
75 percent	of the journeyman wage for the third quarter of the training period
90 percent	of the journeyman wage for the last quarter of the training period

In no instance shall a trainee be paid less than the local minimum wage. The Contractor shall adhere to the minimum hourly wage rate that will satisfy both the NC Department of Labor (NCDOL) and the Department.

Achieving or Failing to Meet Training Goals

The Contractor will be credited for each trainee employed by him on the contract work who is currently enrolled or becomes enrolled in an approved program and who receives training for at least 50 percent of the specific program requirement. Trainees will be allowed to be transferred between projects if required by the Contractor's scheduled workload to meet training goals.

If a contractor fails to attain their training assignments for the calendar year, they may be taken off the NCDOT's Bidders List.

Measurement and Payment

No compensation will be made for providing required training in accordance with these contract documents.

NCDOT GENERAL SEED SPECIFICATION FOR SEED QUALITY

(5-17-11) Z-3

Seed shall be sampled and tested by the North Carolina Department of Agriculture and Consumer Services, Seed Testing Laboratory. When said samples are collected, the vendor shall supply an independent laboratory report for each lot to be tested. Results from seed so sampled shall be final. Seed not meeting the specifications shall be rejected by the Department of Transportation and shall not be delivered to North Carolina Department of Transportation warehouses. If seed has been delivered it shall be available for pickup and replacement at the supplier's expense.

Any re-labeling required by the North Carolina Department of Agriculture and Consumer Services, Seed Testing Laboratory, that would cause the label to reflect as otherwise specified herein shall be rejected by the North Carolina Department of Transportation.

Seed shall be free from seeds of the noxious weeds Johnsongrass, Balloonvine, Jimsonweed, Witchweed, Itchgrass, Serrated Tussock, Showy Crotalaria, Smooth Crotalaria, Sicklepod, Sandbur, Wild Onion, and Wild Garlic. Seed shall not be labeled with the above weed species on the seed analysis label. Tolerances as applied by the Association of Official Seed Analysts will NOT be allowed for the above noxious weeds except for Wild Onion and Wild Garlic.

Tolerances established by the Association of Official Seed Analysts will generally be recognized. However, for the purpose of figuring pure live seed, the found pure seed and found germination percentages as reported by the North Carolina Department of Agriculture and Consumer Services, Seed Testing Laboratory will be used. Allowances, as established by the NCDOT, will be recognized for minimum pure live seed as listed on the following pages.

The specifications for restricted noxious weed seed refers to the number per pound as follows:

Restricted Noxious **Weed**	Limitations per Lb. Of Seed	Restricted Noxious **Weed**	Limitations per Lb. of Seed
Blessed Thistle	4 seeds	Cornflower (Ragged Robin)	27 seeds
Cocklebur	4 seeds	Texas Panicum	27 seeds
Spurred Anoda	4 seeds	Bracted Plantain	54 seeds

Velvetleaf	4 seeds	Buckhorn Plantain	54 seeds
Morning-glory	8 seeds	Broadleaf Dock	54 seeds
Corn Cockle	10 seeds	Curly Dock	54 seeds
Wild Radish	12 seeds	Dodder	54 seeds
Purple Nutsedge	27 seeds	Giant Foxtail	54 seeds
Yellow Nutsedge	27 seeds	Horsenettle	54 seeds
Canada Thistle	27 seeds	Quackgrass	54 seeds
Field Bindweed	27 seeds	Wild Mustard	54 seeds
Hedge Bindweed	27 seeds		

Seed of Pensacola Bahiagrass shall not contain more than 7% inert matter, Kentucky Bluegrass, Centipede and Fine or Hard Fescue shall not contain more than 5% inert matter whereas a maximum of 2% inert matter will be allowed on all other kinds of seed. In addition, all seed shall not contain more than 2% other crop seed nor more than 1% total weed seed. The germination rate as tested by the North Carolina Department of Agriculture shall not fall below 70%, which includes both dormant and hard seed. Seed shall be labeled with not more than 7%, 5% or 2% inert matter (according to above specifications), 2% other crop seed and 1% total weed seed.

Exceptions may be made for minimum pure live seed allowances when cases of seed variety shortages are verified. Pure live seed percentages will be applied in a verified shortage situation. Those purchase orders of deficient seed lots will be credited with the percentage that the seed is deficient.

FURTHER SPECIFICATIONS FOR EACH SEED GROUP ARE GIVEN BELOW:

Minimum 85% pure live seed; maximum 1% total weed seed; maximum 2% total other crop seed; maximum 144 restricted noxious weed seed per pound. Seed less than 83% pure live seed will not be approved.

Sericea Lespedeza
Oats (seeds)

Minimum 80% pure live seed; maximum 1% total weed seed; maximum 2% total other crop; maximum 144 restricted noxious weed seed per pound. Seed less than 78% pure live seed will not be approved.

Tall Fescue (all approved varieties)
Kobe Lespedeza
Korean Lespedeza
Weeping Lovegrass
Carpetgrass
Bermudagrass
Browntop Millet
German Millet – Strain R
Clover – Red/White/Crimson

Minimum 78% pure live seed; maximum 1% total weed seed; maximum 2% total other crop seed; maximum 144 restricted noxious weed seed per pound. Seed less than 76% pure live seed will not be approved.

Common or Sweet Sundangrass

Minimum 76% pure live seed; maximum 1% total weed seed; maximum 2% total other crop seed; maximum 144 restricted noxious weed seed per pound. Seed less than 74% pure live seed will not be approved.

Rye (grain; all varieties)
Kentucky Bluegrass (all approved varieties)
Hard Fescue (all approved varieties)
Shrub (bicolor) Lespedeza

Minimum 70% pure live seed; maximum 1% total weed seed; maximum 2% total other crop seed; maximum 144 noxious weed seed per pound. Seed less than 70% pure live seed will not be approved.

Centipedegrass
Crownvetch
Pensacola Bahiagrass
Creeping Red Fescue
Japanese Millet
Reed Canary Grass
Zoysia

Minimum 70% pure live seed; maximum 1% total weed seed; maximum 2% total other crop seed; maximum 5% inert matter; maximum 144 restricted noxious weed seed per pound.

Barnyard Grass
Big Bluestem
Little Bluestem
Bristly Locust
Birdsfoot Trefoil
Indiangrass
Orchardgrass
Switchgrass
Yellow Blossom Sweet Clover

LISTING OF MBE & WBE SUBCONTRACTORS

Sheet _____ of _____

FIRM NAME AND ADDRESS	MBE or WBE	ITEM NO.	ITEM DESCRIPTION	* AGREED UPON UNIT PRICE	** DOLLAR VOLUME OF ITEM

* The Dollar Volume shown in this column shall be the Actual Price Agreed Upon by the Prime Contractor and the MBE and/or WBE subcontractor, and these prices will be used to determine the percentage of the MBE and/or WBE participation in the contract.

** Must have entry even if figure to be entered is zero.

** Dollar Volume of MBE Subcontractor $ _____

MBE Percentage of Total Contract Bid Price _____ %

** Dollar Volume of WBE Subcontractor $ _____

WBE Percentage of Total Contract Bid Price _____ %

This form must be completed in order for the Bid to be considered responsive and be publicly read.
Bidders with no MBE and/or WBE participation must so indicate this on the form by entering the word or number *zero*.

Contract No. DE00063

County Wake

AWARD LIMITS ON MULTIPLE PROJECTS

It is the desire of the Proposer to be awarded contracts, the value of which will not exceed a total of $_____, for those projects indicated below on which bids are being opened on the same date as shown in the Proposal Form. Individual projects shall be indicated by placing the project number and county in the appropriate place below. Projects not selected will not be subject to an award limit.

_____	_____
(Project Number)	(County)
_____	_____
(Project Number)	(County)
_____	_____
(Project Number)	(County)
_____	_____
(Project Number)	(County)

*If a Proposer desires to limit the total amount of work awarded to him in this letting, he shall state such limit in the space provided above in the second line of this form.

It is agreed that in the event that I am (we are) the successful bidder on indicated projects, the total value of which is more that the above stipulated award limits, the Board of Transportation will award me (us) projects from among those indicated which have a total value not exceeding the award limit and which will result in the best advantage to the Department of Transportation.

_____

**Signature of Authorized Person

**Only those persons authorized to sign bids under the provisions of Article 102-8, Item 7, shall be authorized to sign this form.

Contract No. DE00063

County Wake

County : Wake

Line #	Item Number	Sec #	Description	Quantity	Unit Cost	Amount
			ROADWAY ITEMS			
0001	0000100000-N	800	MOBILIZATION	Lump Sum	L.S.	
0002	0000400000-N	801	CONSTRUCTION SURVEYING	Lump Sum	L.S.	
0003	0043000000-N	226	GRADING	Lump Sum	L.S.	
0004	0196000000-E	270	GEOTEXTILE FOR SOIL STABILIZATION	195 SY		
0005	0318000000-E	300	FOUNDATION CONDITIONING MATERIAL, MINOR STRUCTURES	10 TON		
0006	0320000000-E	300	FOUNDATION CONDITIONING GEOTEXTILE	10 SY		
0007	0372000000-E	310	18" RC PIPE CULVERTS, CLASS III	18 LF		
0008	0378000000-E	310	24" RC PIPE CULVERTS, CLASS III	6 LF		
0009	0996000000-N	350	PIPE CLEAN-OUT	2 EA		
0010	1099500000-E	505	SHALLOW UNDERCUT	65 CY		
0011	1099700000-E	505	CLASS IV SUBGRADE STABILIZATION	132 TON		
0012	1121000000-E	520	AGGREGATE BASE COURSE	46 TON		
0013	1220000000-E	545	INCIDENTAL STONE BASE	50 TON		
0014	1297000000-E	607	MILLING ASPHALT PAVEMENT, ***" DEPTH (1-1/2")	401 SY		
0015	1491000000-E	610	ASPHALT CONC BASE COURSE, TYPE B25.0C	360 TON		
0016	1503000000-E	610	ASPHALT CONC INTERMEDIATE COURSE, TYPE I19.0C	20 TON		
0017	1523000000-E	610	ASPHALT CONC SURFACE COURSE, TYPE S9.5C	210 TON		
0018	1575000000-E	620	ASPHALT BINDER FOR PLANT MIX	50 TON		

County : Wake

Line #	Item Number	Sec #	Description	Quantity	Unit Cost	Amount
0019	2000000000-N	806	RIGHT OF WAY MARKERS	2 EA		
0020	2022000000-E	815	SUBDRAIN EXCAVATION	23 CY		
0021	2033000000-E	815	SUBDRAIN FINE AGGREGATE	17 CY		
0022	2044000000-E	815	6" PERFORATED SUBDRAIN PIPE	100 LF		
0023	2070000000-N	815	SUBDRAIN PIPE OUTLET	1 EA		
0024	2253000000-E	840	PIPE COLLARS	1.5 CY		
0025	2286000000-N	840	MASONRY DRAINAGE STRUCTURES	1 EA		
0026	2396000000-N	840	FRAME WITH COVER, STD 840.54	1 EA		
0027	2535000000-E	846	**"X **" CONCRETE CURB (8" X 6")	560 LF		
0028	2627000000-E	852	4" CONCRETE ISLAND COVER	312 SY		
0029	2830000000-N	858	ADJUSTMENT OF MANHOLES	1 EA		
0030	3649000000-E	876	RIP RAP, CLASS B	7 TON		
0031	3656000000-E	876	GEOTEXTILE FOR DRAINAGE	22 SY		
0032	4405000000-E	1110	WORK ZONE SIGNS (PORTABLE)	192 SF		
0033	4415000000-N	1115	FLASHING ARROW BOARD	1 EA		
0034	4422000000-N	1120	PORTABLE CHANGEABLE MESSAGE SIGN (SHORT TERM)	10 DAY		
0035	4430000000-N	1130	DRUMS	49 EA		
0036	4435000000-N	1135	CONES	37 EA		
0037	4450000000-N	1150	FLAGGER	42 HR		
0038	4480000000-N	1165	TMA	1 EA		

County : Wake

Line #	Item Number	Sec #	Description	Quantity	Unit Cost	Amount
0039	4510000000-N	SP	LAW ENFORCEMENT	24 HR		
0040	4685000000-E	1205	THERMOPLASTIC PAVEMENT MARKING LINES (4", 90 MILS)	1,021 LF		
0041	4686000000-E	1205	THERMOPLASTIC PAVEMENT MARKING LINES (4", 120 MILS)	721 LF		
0042	4725000000-E	1205	THERMOPLASTIC PAVEMENT MARKING SYMBOL (90 MILS)	12 EA		
0043	4875000000-N	1205	REMOVAL OF PAVEMENT MARKING SYMBOLS & CHARACTERS	2 EA		
0044	6000000000-E	1605	TEMPORARY SILT FENCE	380 LF		
0045	6009000000-E	1610	STONE FOR EROSION CONTROL, CLASS B	10 TON		
0046	6012000000-E	1610	SEDIMENT CONTROL STONE	5 TON		
0047	6015000000-E	1615	TEMPORARY MULCHING	0.5 ACR		
0048	6018000000-E	1620	SEED FOR TEMPORARY SEEDING	50 LB		
0049	6021000000-E	1620	FERTILIZER FOR TEMPORARY SEED-ING	0.25 TON		
0050	6024000000-E	1622	TEMPORARY SLOPE DRAINS	200 LF		
0051	6030000000-E	1630	SILT EXCAVATION	20 CY		
0052	6036000000-E	1631	MATTING FOR EROSION CONTROL	40 SY		
0053	6038000000-E	SP	PERMANENT SOIL REINFORCEMENT MAT	145 SY		
0054	6042000000-E	1632	1/4" HARDWARE CLOTH	50 LF		
0055	6071010000-E	SP	WATTLE	35 LF		
0056	6071020000-E	SP	POLYACRYLAMIDE (PAM)	5 LB		
0057	6084000000-E	1660	SEEDING & MULCHING	0.5 ACR		

County : Wake

Line #	Item Number	Sec #	Description	Quantity	Unit Cost	Amount
0058	6087000000-E	1660	MOWING	0.5 ACR		
0059	6090000000-E	1661	SEED FOR REPAIR SEEDING	50 LB		
0060	6093000000-E	1661	FERTILIZER FOR REPAIR SEEDING	0.25 TON		
0061	6096000000-E	1662	SEED FOR SUPPLEMENTAL SEEDING	50 LB		
0062	6108000000-E	1665	FERTILIZER TOPDRESSING	0.25 TON		
0063	6114500000-N	1667	SPECIALIZED HAND MOWING	10 MHR		
0064	6117000000-N	SP	RESPONSE FOR EROSION CONTROL	7 EA		
0065	7060000000-E	1705	SIGNAL CABLE	1,750 LF		
0066	7108000000-E	1705	VEHICLE SIGNAL HEAD (12", 1 SECTION)	4 EA		
0067	7120000000-E	1705	VEHICLE SIGNAL HEAD (12", 3 SECTION)	3 EA		
0068	7132000000-E	1705	VEHICLE SIGNAL HEAD (12", 4 SECTION)	1 EA		
0069	7144000000-E	1705	VEHICLE SIGNAL HEAD (12", 5 SECTION)	1 EA		
0070	7204000000-N	1705	LOUVER	2 EA		
0071	7264000000-E	1710	MESSENGER CABLE (3/8")	400 LF		
0072	7300000000-E	1715	UNPAVED TRENCHING (**********) (1 conduit, 2 inch)	800 LF		
0073	7301000000-E	1715	DIRECTIONAL DRILL (**********) (1 conduit, 2 inch)	100 LF		
0074	7324000000-N	1716	JUNCTION BOX (STANDARD SIZE)	7 EA		
0075	7360000000-N	1720	WOOD POLE	1 EA		
0076	7372000000-N	1721	GUY ASSEMBLY	4 EA		

County : Wake

Line #	Item Number	Sec #	Description	Quantity	Unit Cost	Amount
0077	7420000000-E	1722	2" RISER WITH WEATHERHEAD	1 EA		
0078	7444000000-E	1725	INDUCTIVE LOOP SAWCUT	425 LF		
0079	7456000000-E	1726	LEAD-IN CABLE (**********) (14-2)	1,500 LF		
0080	7636000000-N	1745	SIGN FOR SIGNALS	5 EA		
0081	7642300000-N	1743	TYPE III PEDESTAL WITH FOUND-ATION	2 EA		
0082	7780000000-N	1751	DETECTOR CARD (TYPE 2070L)	1 EA		

Contract No. DE00063

County Wake

Contract No. DE00063

County Wake

PLEASE ACKNOWLEGE RECEIPT OF ADDENDA BY WRITING IN ADDENDUM NUMBER, INITIALING AND DATING BELOW.

Addendum No. _____ Initial & Date: _____ Addendum No. _____ Initial & Date: _____

CONTRACTOR: _____

ADDRESS: _____

Federal Identification Number: _____

Authorized Agent: _____Title: _____

Signature: _____ Date: _____

Witness: _____ Title: _____

Signature: _____ Date: _____

THIS SECTION TO BE COMPLETED BY N. C. DEPARTMENT OF TRANSPORTATION

This bid has been reviewed in accordance with Article 103-1 of the Standard Specifications for Roads and Structures 2012.

Reviewed by: _____

DATE

Accepted by NCDOT: _____

DATE

Contract No. DE00063

County Wake

Contract No. DE00063

County Wake

EXECUTION OF CONTRACT
NON-COLLUSION AFFIDAVIT, DEBARMENT CERTIFICATION AND GIFT BAN CERTIFICATION
CORPORATION

The Contractor being duly sworn, solemnly swears (or affirms) that neither he, nor any official, agent or employee has entered into any agreement, participated in any collusion, or otherwise taken any action which is in restraint of free competitive bidding in connection with this Contract, that the Contractor has not been convicted of violating *N.C.G.S. § 133-24* within the last three years, and that the Contractor intends to do the work with its own bonafide employees or subcontractors and did not bid for the benefit of another contractor.

By submitting this Execution of Contract, Non-Collusion Affidavit and Debarment Certification, the Contractor is certifying his status under penalty of perjury under the laws of the United States in accordance with the Debarment Certification attached, provided that the Debarment Certification also includes any required statements concerning exceptions that are applicable.

N.C.G.S. § 133-32 and Executive Order 24 prohibit the offer to, or acceptance by, any State Employee of any gift from anyone with a contract with the State, or from any person seeking to do business with the State. By execution of any response in this procurement, you attest, for your entire organization and its employees or agents, that you are not aware that any such gift has been offered, accepted, or promised by any employees of your organization.

SIGNATURE OF CONTRACTOR

_____
Full name of Corporation

_____
Address as Prequalified

Attest _____ By _____

Secretary/Assistant Secretary
Select appropriate title

President/Vice President/Assistant Vice President
Select appropriate title

_____
Print or type Signer's name

_____
Print or type Signer's name

CORPORATE SEAL

AFFIDAVIT MUST BE NOTARIZED

Subscribed and sworn to before me this the

_____ day of _____ 20__.

_____
Signature of Notary Public

NOTARY SEAL

of _____County

State of _____

My Commission Expires:_____

Contract No. DE00063

County Wake

Contract No. DE00063

County Wake

EXECUTION OF CONTRACT
NON-COLLUSION AFFIDAVIT, DEBARMENT CERTIFICATION AND GIFT BAN CERTIFICATION
PARTNERSHIP

The Contractor being duly sworn, solemnly swears (or affirms) that neither he, nor any official, agent or employee has entered into any agreement, participated in any collusion, or otherwise taken any action which is in restraint of free competitive bidding in connection with this Contract, that the Contractor has not been convicted of violating *N.C.G.S. § 133-24* within the last three years, and that the Contractor intends to do the work with its own bonafide employees or subcontractors and did not bid for the benefit of another contractor.

By submitting this Execution of Contract, Non-Collusion Affidavit and Debarment Certification, the Contractor is certifying his status under penalty of perjury under the laws of the United States in accordance with the Debarment Certification attached, provided that the Debarment Certification also includes any required statements concerning exceptions that are applicable.

N.C.G.S. § 133-32 and Executive Order 24 prohibit the offer to, or acceptance by, any State Employee of any gift from anyone with a contract with the State, or from any person seeking to do business with the State. By execution of any response in this procurement, you attest, for your entire organization and its employees or agents, that you are not aware that any such gift has been offered, accepted, or promised by any employees of your organization.

SIGNATURE OF CONTRACTOR

_____
Full Name of Partnership

_____
Address as Prequalified

_____ By _____
Signature of Witness Signature of Partner

_____ _____
Print or type Signer's name Print or type Signer's name

AFFIDAVIT MUST BE NOTARIZED

Subscribed and sworn to before me this the

_____ day of _____ 20__.

NOTARY SEAL

_____
Signature of Notary Public

of _____County

State of _____

My Commission Expires:_____

Contract No. DE00063

County Wake

Contract No. DE00063

County Wake

EXECUTION OF CONTRACT
NON-COLLUSION AFFIDAVIT, DEBARMENT CERTIFICATION AND GIFT BAN CERTIFICATION
LIMITED LIABILITY COMPANY

The Contractor being duly sworn, solemnly swears (or affirms) that neither he, nor any official, agent or employee has entered into any agreement, participated in any collusion, or otherwise taken any action which is in restraint of free competitive bidding in connection with this Contract, that the Contractor has not been convicted of violating *N.C.G.S. § 133-24* within the last three years, and that the Contractor intends to do the work with its own bonafide employees or subcontractors and did not bid for the benefit of another contractor.

By submitting this Execution of Contract, Non-Collusion Affidavit and Debarment Certification, the Contractor is certifying his status under penalty of perjury under the laws of the United States in accordance with the Debarment Certification attached, provided that the Debarment Certification also includes any required statements concerning exceptions that are applicable.

N.C.G.S. § 133-32 and Executive Order 24 prohibit the offer to, or acceptance by, any State Employee of any gift from anyone with a contract with the State, or from any person seeking to do business with the State. By execution of any response in this procurement, you attest, for your entire organization and its employees or agents, that you are not aware that any such gift has been offered, accepted, or promised by any employees of your organization.

SIGNATURE OF CONTRACTOR

_____
Full Name of Firm

_____
Address as Prequalified

_____ Signature of Witness	_____ Signature of Member/Manager/Authorized Agent *Select appropriate title*
_____ Print or type Signer's name	_____ Print or type Signer's Name

AFFIDAVIT MUST BE NOTARIZED

Subscribed and sworn to before me this the

_____ day of _____ 20__.

NOTARY SEAL

_____
Signature of Notary Public

of _____County

State of _____

My Commission Expires:_____

Contract No. DE00063

County Wake

Contract No. DE00063

County Wake

EXECUTION OF CONTRACT
NON-COLLUSION AFFIDAVIT, DEBARMENT CERTIFICATION AND GIFT BAN CERTIFICATION
JOINT VENTURE (2) or (3)

The Contractor being duly sworn, solemnly swears (or affirms) that neither he, nor any official, agent or employee has entered into any agreement, participated in any collusion, or otherwise taken any action which is in restraint of free competitive bidding in connection with this Contract, that the Contractor has not been convicted of violating *N.C.G.S. § 133-24* within the last three years, and that the Contractor intends to do the work with its own bonafide employees or subcontractors and did not bid for the benefit of another contractor.

By submitting this Execution of Contract, Non-Collusion Affidavit and Debarment Certification, the Contractor is certifying his status under penalty of perjury under the laws of the United States in accordance with the Debarment Certification attached, provided that the Debarment Certification also includes any required statements concerning exceptions that are applicable.

N.C.G.S. § 133-32 and Executive Order 24 prohibit the offer to, or acceptance by, any State Employee of any gift from anyone with a contract with the State, or from any person seeking to do business with the State. By execution of any response in this procurement, you attest, for your entire organization and its employees or agents, that you are not aware that any such gift has been offered, accepted, or promised by any employees of your organization.

SIGNATURE OF CONTRACTORS

Instructions: **2 Joint Venturers** Fill in lines (1), (2) and (3) and execute. **3 Joint Venturers** Fill in lines (1), (2), (3) and (4) and execute. On Line (1), fill in the name of the Joint Venture Company. On Line (2), fill in the name of one of the joint venturers and execute below in the appropriate manner. On Line (3), print or type the name of the other joint venturer and execute below in the appropriate manner. On Line (4), fill in the name of the third joint venturer, if applicable and execute below in the appropriate manner.

(1) _____
Name of Joint Venture

(2) _____
Name of Contractor

_____
Address as Prequalified

_____	By	_____
Signature of Witness or Attest		Signature of Contractor
_____		_____
Print or type Signer's name		Print or type Signer's name

If Corporation, affix Corporate Seal and

(3) _____
Name of Contractor

_____
Address as Prequalified

_____	By	_____
Signature of Witness or Attest		Signature of Contractor
_____		_____
Print or type Signer's name		Print or type Signer's name

If Corporation, affix Corporate Seal and

(4) _____
Name of Contractor *(for 3 Joint Venture only)*

_____
Address as Prequalified

_____	By	_____
Signature of Witness or Attest		Signature of Contractor
_____		_____
Print or type Signer's name		Print or type Signer's name

If Corporation, affix Corporate Seal

NOTARY SEAL
Affidavit must be notarized for Line (2)
Subscribed and sworn to before me this
_____day of_____ 20___
_____
Signature of Notary Public
of _____County
State of _____
My Commission Expires:_____

NOTARY SEAL
Affidavit must be notarized for Line (3)
Subscribed and sworn to before me this
_____day of _____ 20___
_____
Signature of Notary Public
of _____County
State of _____
My Commission Expires:_____

NOTARY SEAL
Affidavit must be notarized for Line (4)
Subscribed and sworn to before me this
____day of _____ 20_____
_____
Signature of Notary Public
of _____County
State of _____
My Commission Expires:_____

Contract No. DE00063

County Wake

Contract No. DE00063

County Wake

EXECUTION OF CONTRACT
NON-COLLUSION AFFIDAVIT, DEBARMENT CERTIFICATION AND GIFT BAN CERTIFICATION
INDIVIDUAL DOING BUSINESS UNDER A FIRM NAME

The Contractor being duly sworn, solemnly swears (or affirms) that neither he, nor any official, agent or employee has entered into any agreement, participated in any collusion, or otherwise taken any action which is in restraint of free competitive bidding in connection with this Contract, that the Contractor has not been convicted of violating *N.C.G.S. § 133-24* within the last three years, and that the Contractor intends to do the work with its own bonafide employees or subcontractors and did not bid for the benefit of another contractor.

By submitting this Execution of Contract, Non-Collusion Affidavit and Debarment Certification, the Contractor is certifying his status under penalty of perjury under the laws of the United States in accordance with the Debarment Certification attached, provided that the Debarment Certification also includes any required statements concerning exceptions that are applicable.

N.C.G.S. § 133-32 and Executive Order 24 prohibit the offer to, or acceptance by, any State Employee of any gift from anyone with a contract with the State, or from any person seeking to do business with the State. By execution of any response in this procurement, you attest, for your entire organization and its employees or agents, that you are not aware that any such gift has been offered, accepted, or promised by any employees of your organization.

SIGNATURE OF CONTRACTOR

Name of Contractor _____
Individual name

Trading and doing business as _____
Full name of Firm

_____
Address as Prequalified

_____ _____
Signature of Witness Signature of Contractor, Individually

_____ _____
Print or type Signer's name Print or type Signer's name

AFFIDAVIT MUST BE NOTARIZED

Subscribed and sworn to before me this the

NOTARY SEAL

_____ day of _____ 20__.

_____
Signature of Notary Public

of _____County

State of _____

My Commission Expires:_____

Contract No. DE00063

County Wake

Contract No. DE00063

County Wake

EXECUTION OF CONTRACT
NON-COLLUSION AFFIDAVIT, DEBARMENT CERTIFICATION AND GIFT BAN CERTIFICATION
INDIVIDUAL DOING BUSINESS IN HIS OWN NAME

The Contractor being duly sworn, solemnly swears (or affirms) that neither he, nor any official, agent or employee has entered into any agreement, participated in any collusion, or otherwise taken any action which is in restraint of free competitive bidding in connection with this Contract, that the Contractor has not been convicted of violating *N.C.G.S. § 133-24* within the last three years, and that the Contractor intends to do the work with its own bonafide employees or subcontractors and did not bid for the benefit of another contractor.

By submitting this Execution of Contract, Non-Collusion Affidavit and Debarment Certification, the Contractor is certifying his status under penalty of perjury under the laws of the United States in accordance with the Debarment Certification attached, provided that the Debarment Certification also includes any required statements concerning exceptions that are applicable.

N.C.G.S. § 133-32 and Executive Order 24 prohibit the offer to, or acceptance by, any State Employee of any gift from anyone with a contract with the State, or from any person seeking to do business with the State. By execution of any response in this procurement, you attest, for your entire organization and its employees or agents, that you are not aware that any such gift has been offered, accepted, or promised by any employees of your organization.

SIGNATURE OF CONTRACTOR

Name of Contractor _____
Print or type Individual name

_____
Address as Prequalified

_____
Signature of Contractor, Individually

_____
Print or type Signer's Name

_____
Signature of Witness

_____
Print or type Signer's name

AFFIDAVIT MUST BE NOTARIZED

Subscribed and sworn to before me this the

NOTARY SEAL

_____ day of _____ 20__.

_____
Signature of Notary Public

of _____County

State of _____

My Commission Expires:_____

Contract No. DE00063

County Wake

DEBARMENT CERTIFICATION

Conditions for certification:

1. The prequalified bidder shall provide immediate written notice to the Department if at any time the bidder learns that his certification was erroneous when he submitted his debarment certification or explanation filed with the Department, or has become erroneous because of changed circumstances.

2. The terms *covered transaction, debarred, suspended, ineligible, lower tier covered transaction, participant, person, primary covered transaction, principal, proposal,* and *voluntarily excluded,* as used in this provision, have the meanings set out in the Definitions and Coverage sections of the rules implementing Executive Order 12549. A copy of the Federal Rules requiring this certification and detailing the definitions and coverages may be obtained from the Contract Officer of the Department.

3. The prequalified bidder agrees by submitting this form, that he will not knowingly enter into any lower tier covered transaction with a person who is debarred, suspended, declared ineligible, or voluntarily excluded from participation in NCDOT contracts, unless authorized by the Department.

4. For Federal Aid projects, the prequalified bidder further agrees that by submitting this form he will include the Federal-Aid Provision titled *Required Contract Provisions Federal-Aid Construction Contract (Form FHWA PR* 1273) provided by the Department, without subsequent modification, in all lower tier covered transactions.

5. The prequalified bidder may rely upon a certification of a participant in a lower tier covered transaction that he is not debarred, suspended, ineligible, or voluntarily excluded from the covered transaction, unless he knows that the certification is erroneous. The bidder may decide the method and frequency by which he will determine the eligibility of his subcontractors.

6. Nothing contained in the foregoing shall be construed to require establishment of a system of records in order to render in good faith the certification required by this provision. The knowledge and information of a participant is not required to exceed that which is normally possessed by a prudent person in the ordinary course of business dealings.

7. Except as authorized in paragraph 6 herein, the Department may terminate any contract if the bidder knowingly enters into a lower tier covered transaction with a person who is suspended, debarred, ineligible, or voluntarily excluded from participation in this transaction, in addition to other remedies available by the Federal Government.

Contract No. DE00063

County Wake

DEBARMENT CERTIFICATION

The prequalified bidder certifies to the best of his knowledge and belief, that he and his principals:

a. Are not presently debarred, suspended, proposed for debarment, declared ineligible, or voluntarily excluded from covered transactions by any Federal department or agency;

b. Have not within a three-year period preceding this proposal been convicted of or had a civil judgment rendered against them for commission of fraud or a criminal offense in connection with obtaining, attempting to obtain, or performing a public (Federal, State or local) transaction or contract under a public transaction; violation of Federal or State antitrust statutes or commission of embezzlement, theft, forgery, bribery, falsification or destruction of records; making false statements; or receiving stolen property;

c. Are not presently indicted for or otherwise criminally or civilly charged by a governmental entity (Federal, State or local) with commission of any of the offenses enumerated in paragraph b. of this certification; and

d. Have not within a three-year period preceding this proposal had one or more public transactions (Federal, State or local) terminated for cause or default.

e. Will submit a revised Debarment Certification immediately if his status changes and will show in his bid proposal an explanation for the change in status.

If the prequalified bidder cannot certify that he is not debarred, he shall provide an explanation with this submittal. An explanation will not necessarily result in denial of participation in a contract.

Failure to submit a non-collusion affidavit and debarment certification will result in the prequalified bidder's bid being considered non-responsive.

☐ Check here if an explanation is attached to this certification.

Contract No: DE000063

County: Wake

ACCEPTED BY THE
DEPARTMENT OF TRANSPORTATION

_____
Contract Officer

_____
Date