This electronic collection of documents is provided for the convenience of the user and is Not a Certified Document –

The documents contained herein were originally issued and sealed by the individuals whose names and license numbers appear on each page, on the dates appearing with their signature on that page.
This file or an individual page shall not be considered a certified document.

09/08/99

TIP PROJECT: B-5145

CONTRACT: DE00243

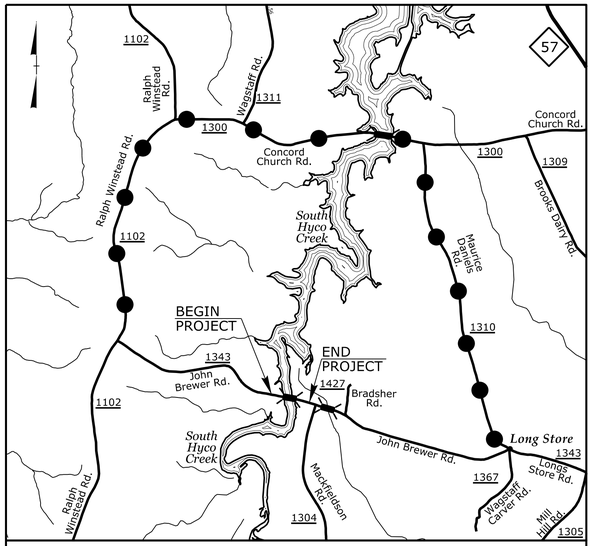

VICINITY MAP

OFF-SITE DETOUR

See Sheet 1A For Index of Sheets
See Sheet 1B For Conventional Symbols

STATE OF NORTH CAROLINA
DIVISION OF HIGHWAYS

PERSON COUNTY

STATE	STATE PROJECT REFERENCE NO.	SHEET NO.	TOTAL SHEETS
N.C.	B-5145	1	

STATE PROJ. NO.	F.A. PROJ. NO.	DESCRIPTION
42306.1.1	N/A	PE
42306.2.1	N/A	ROW & UTILITY
42306.3.1	N/A	CONSTRUCTION

LOCATION: ***BRIDGE NO. 50 OVER SOUTH HYCO CREEK ON SR 1343 (JOHN BREWER RD.)***

TYPE OF WORK: ***GRADING, DRAINAGE, PAVING, AND STRUCTURE***

NAD 83/NSRS 2007

4

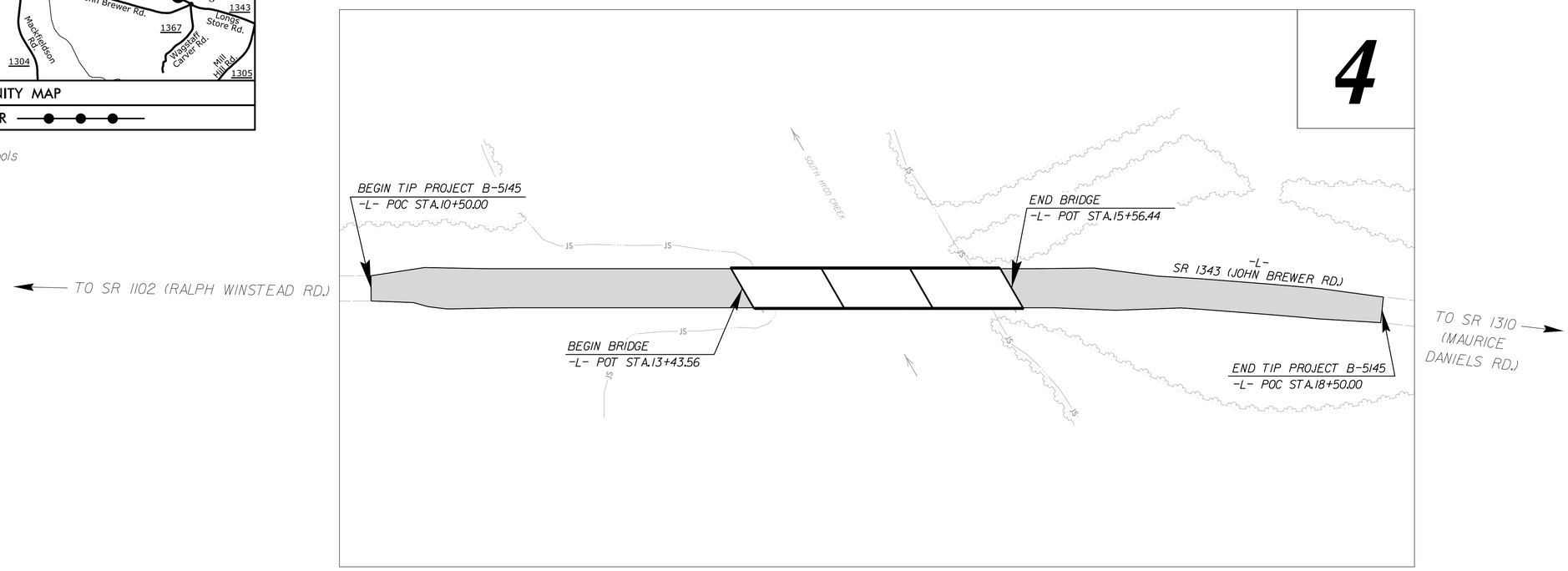

DOCUMENT NOT CONSIDERED FINAL UNLESS ALL SIGNATURES COMPLETED

GRAPHIC SCALES

50 25 0 50 100
PLANS

50 25 0 50 100
PROFILE (HORIZONTAL)

10 5 0 10 20
PROFILE (VERTICAL)

DESIGN DATA

2012 ADT = 360 VPD
2015 ADT = 720 VPD
V = 60 MPH
CLASS = RURAL LOCAL

SUBREGIONAL TIER

PROJECT LENGTH

LENGTH ROADWAY TIP PROJECT B-5145	=	0.112 mi.
LENGTH STRUCTURES TIP PROJECT B-5145	=	0.040 mi.
TOTAL LENGTH TIP PROJECT B-5145	=	0.152 mi.

Prepared in the Offices of:

STEWART
421 FAYETTEVILLE ST, STE 400
RALEIGH, NC 27601
T 919.380.8750
firm license #: C-1051
www.stewartinc.com
PROJECT #:H160009.00

NC FIRM LICENSE No: F-1148
1151 SE Cary Parkway, Suite 101
Cary, NC 27518
(919) 557-0929
ECOLOGICAL ENGINEERING

2018 STANDARD SPECIFICATIONS

RIGHT OF WAY DATE:
JUNE 12, 2017

RIGHT OF WAY COMPLETE:
JANUARY 9, 2018

LETTING DATE:
JUNE 13, 2018

ANDY YOUNG, PE
PROJECT ENGINEER

MICHAEL BURNS, PE
PROJECT DESIGN ENGINEER

LISA GILCHRIST, EI
NCDOT CONTACT

HYDRAULICS ENGINEER

5/9/2018

DocuSigned by:
Frank F Fleming
B6B2D4A4B4A46...
SIGNATURE: P.E.

NORTH CAROLINA PROFESSIONAL SEAL 20147 ENGINEER FRANK F. FLEMING

ROADWAY DESIGN ENGINEER

5/9/2018

DocuSigned by:
Andrew P. Young
EE21D9D0D62E4EF...
SIGNATURE: P.E.

NORTH CAROLINA PROFESSIONAL SEAL 034407 ENGINEER ANDREW P. YOUNG

STATE OF NORTH CAROLINA DEPARTMENT OF TRANSPORTATION

5/1/2018
:\Roadway\Proj\B5145_Rdy_tsh.dgn
USER:ayoung

PROJECT REFERENCE NO.	SHEET NO.
B-5145	1A

ROADWAY DESIGN ENGINEER

NORTH CAROLINA PROFESSIONAL SEAL 034407 ENGINEER ANDREW P. YOUNG

DocuSigned by: Andrew P. Young EF21D93DD82F4EF 8/9/2018

DOCUMENT NOT CONSIDERED FINAL UNLESS ALL SIGNATURES COMPLETED

INDEX OF SHEETS

SHEET NUMBER	SHEET
1	TITLE SHEET
1A	INDEX OF SHEETS, GENERAL NOTES, AND STANDARD DRAWINGS
1B	CONVENTIONAL SYMBOLS
1C-1 THRU 1C-2	SURVEY CONTROL SHEETS
1D-1	CENTERLINE COORDINATE LIST
2A-1	PAVEMENT SCHEDULE AND TYPICAL SECTIONS
2C-1	SHOULDER WEDGE DETAIL
2C-2	W BEAM RAIL DETAIL
2G-1	ROCK PLATING AND EMBANKMENT DETAIL
3B-1	ROADWAY SUMMARIES
3D-1	DRAINAGE SUMMARIES
3G-1	GEOTECHNICAL SUMMARIES
4	PLAN SHEET
5	PROFILE SHEET
TMP-1 THRU TMP-3	TRAFFIC MANAGEMENT PLANS
PMP-1	PAVEMENT MARKING PLANS
EC-1 THRU EC-5	EROSION CONTROL PLANS
X-1A	CROSS-SECTION SUMMARY SHEET
X-1 THRU X-6	CROSS-SECTIONS
S-1 THRU S-22	STRUCTURE PLANS

EFF. 01-16-2018
REV.

2018 ROADWAY ENGLISH STANDARD DRAWINGS

The following Roadway Standards as appear in "Roadway Standard Drawings" Highway Design Branch - N. C. Department of Transportation - Raleigh, N. C., Dated January, 2018 are applicable to this project and by reference hereby are considered a part of these plans:

STD.NO.	TITLE
DIVISION 2 - EARTHWORK	
200.03	Method of Clearing - Method III
225.02	Guide for Grading Subgrade - Secondary and Local
225.04	Method of Obtaining Superelevation - Two Lane Pavement
275.01	Rock Plating
DIVISION 3 - PIPE CULVERTS	
300.01	Method of Pipe Installation
310.10	Driveway Pipe Construction
DIVISION 4 - MAJOR STRUCTURES	
422.01	Bridge Approach Fills - Type II Modified Approach Fill
DIVISION 5 - SUBGRADE, BASES AND SHOULDERS	
560.01	Method of Shoulder Construction - High Side of Superelevated Curve - Method I
DIVISION 8 - INCIDENTALS	
806.01	Concrete Right-of-Way Marker
806.02	Granite Right-of-Way Marker
840.25	Anchorage for Frames - Brick or Concrete or Precast
840.29	Frames and Narrow Slot Flat Grates
840.35	Traffic Bearing Grated Drop Inlet - for Cast Iron Double Frame and Grates
846.01	Concrete Curb, Gutter and Curb & Gutter
846.04	Drop Inlet Installation in Shoulder Berm Gutter
862.01	Guardrail Placement
862.02	Guardrail Installation
862.03	Structure Anchor Units
876.02	Guide for Rip Rap at Pipe Outlets
876.04	Drainage Ditches with Class 'B' Rip Rap

GENERAL NOTES:

2018 SPECIFICATIONS
EFFECTIVE: 01-16-2018
REVISED:

GRADE LINE:
GRADING AND SURFACING:

THE GRADE LINES SHOWN DENOTE THE FINISHED ELEVATION OF THE PROPOSED SURFACING AT GRADE POINTS SHOWN ON THE TYPICAL SECTIONS. GRADE LINES MAY BE ADJUSTED AT THEIR BEGINNING AND ENDING AND AT STRUCTURES AS DIRECTED BY THE ENGINEER IN ORDER TO SECURE A PROPER TIE-IN.

CLEARING:

CLEARING ON THIS PROJECT SHALL BE PERFORMED TO THE LIMITS ESTABLISHED BY METHOD III.

SUPERELEVATION:

ALL CURVES ON THIS PROJECT SHALL BE SUPERELEVATED IN ACCORDANCE WITH STD. NO. 225.04 USING THE RATE OF SUPERELEVATION AND RUNOFF SHOWN ON THE PLANS. SUPERELEVATION IS TO BE REVOLVED ABOUT THE GRADE POINTS SHOWN ON THE TYPICAL SECTIONS.

SHOULDER CONSTRUCTION:

ASPHALT, EARTH, AND CONCRETE SHOULDER CONSTRUCTION ON THE HIGH SIDE OF SUPERELEVATED CURVES SHALL BE IN ACCORDANCE WITH STD. NO. 560.01

SIDE ROADS:

THE CONTRACTOR WILL BE REQUIRED TO DO ALL NECESSARY WORK TO PROVIDE SUITABLE CONNECTIONS WITH ALL ROADS, STREETS, AND DRIVES ENTERING THIS PROJECT. THIS WORK WILL BE PAID FOR AT THE CONTRACT UNIT PRICE FOR THE PARTICULAR ITEMS INVOLVED.

GUARDRAIL:

THE GUARDRAIL LOCATIONS SHOWN ON THE PLANS MAY BE ADJUSTED DURING CONSTRUCTION AS DIRECTED BY THE ENGINEER. THE CONTRACTOR SHOULD CONSULT WITH THE ENGINEER PRIOR TO ORDERING GUARDRAIL MATERIAL.

TEMPORARY SHORING:

SHORING REQUIRED FOR THE MAINTENANCE OF TRAFFIC WILL BE PAID FOR AS "EXTRA WORK" IN ACCORDANCE WITH SECTION 104-7.

END BENTS:

THE SURVEYOR SHALL CHECK THE STRUCTURE END BENT PLANS, DETAILS, AND CROSS-SECTIONS PRIOR TO SETTING OF THE SLOPE STAKES FOR THE EMBANKMENT OR EXCAVATION APPROACHING A BRIDGE.

RIGHT-OF-WAY MARKERS:

ALL RIGHT-OF-WAY MARKERS ON THIS PROJECT SHALL BE PLACED BY CONTRACT.

8/17/99
5/1/2018
...\B5145_RDY_PSH_01A.dgn
USER:ayoung

12/2/2016

PROJECT REFERENCE NO.	SHEET NO.
B-5145	1B

STATE OF NORTH CAROLINA, DIVISION OF HIGHWAYS

CONVENTIONAL PLAN SHEET SYMBOLS

Note: Not to Scale

***S.U.E. = Subsurface Utility Engineering**

BOUNDARIES AND PROPERTY:

- State Line
- County Line
- Township Line
- City Line
- Reservation Line
- Property Line
- Existing Iron Pin — EIP
- Computed Property Corner
- Property Monument — ECM
- Parcel/Sequence Number — 123
- Existing Fence Line
- Proposed Woven Wire Fence
- Proposed Chain Link Fence
- Proposed Barbed Wire Fence
- Existing Wetland Boundary — WLB
- Proposed Wetland Boundary — WLB
- Existing Endangered Animal Boundary — EAB
- Existing Endangered Plant Boundary — EPB
- Existing Historic Property Boundary — HPB
- Known Contamination Area: Soil — S
- Potential Contamination Area: Soil — S
- Known Contamination Area: Water — W
- Potential Contamination Area: Water — W
- Contaminated Site: Known or Potential

BUILDINGS AND OTHER CULTURE:

- Gas Pump Vent or U/G Tank Cap
- Sign — S
- Well — W
- Small Mine
- Foundation
- Area Outline
- Cemetery
- Building
- School
- Church
- Dam

HYDROLOGY:

- Stream or Body of Water
- Hydro, Pool or Reservoir
- Jurisdictional Stream — JS
- Buffer Zone 1 — BZ 1
- Buffer Zone 2 — BZ 2
- Flow Arrow
- Disappearing Stream
- Spring
- Wetland
- Proposed Lateral, Tail, Head Ditch — FLOW
- False Sump

RAILROADS:

- Standard Gauge — CSX TRANSPORTATION
- RR Signal Milepost — MILEPOST 35
- Switch — SWITCH
- RR Abandoned
- RR Dismantled

RIGHT OF WAY & PROJECT CONTROL:

- Secondary Horiz and Vert Control Point
- Primary Horiz Control Point
- Primary Horiz and Vert Control Point
- Exist Permanent Easment Pin and Cap
- New Permanent Easement Pin and Cap
- Vertical Benchmark
- Existing Right of Way Marker
- Existing Right of Way Line
- New Right of Way Line — RW
- New Right of Way Line with Pin and Cap — RW
- New Right of Way Line with Concrete or Granite R/W Marker — RW
- New Control of Access Line with Concrete C/A Marker — CA
- Existing Control of Access — CA
- New Control of Access — CA
- Existing Easement Line — E
- New Temporary Construction Easement — E
- New Temporary Drainage Easement — TDE
- New Permanent Drainage Easement — PDE
- New Permanent Drainage / Utility Easement — DUE
- New Permanent Utility Easement — PUE
- New Temporary Utility Easement — TUE
- New Aerial Utility Easement — AUE

ROADS AND RELATED FEATURES:

- Existing Edge of Pavement
- Existing Curb
- Proposed Slope Stakes Cut — C
- Proposed Slope Stakes Fill — F
- Proposed Curb Ramp — CR
- Existing Metal Guardrail
- Proposed Guardrail
- Existing Cable Guiderail
- Proposed Cable Guiderail
- Equality Symbol
- Pavement Removal

VEGETATION:

- Single Tree
- Single Shrub
- Hedge
- Woods Line
- Orchard
- Vineyard — Vineyard

EXISTING STRUCTURES:

MAJOR:

- Bridge, Tunnel or Box Culvert — CONC
- Bridge Wing Wall, Head Wall and End Wall — CONC WW

MINOR:

- Head and End Wall — CONC HW
- Pipe Culvert
- Footbridge
- Drainage Box: Catch Basin, DI or JB — CB
- Paved Ditch Gutter
- Storm Sewer Manhole — S
- Storm Sewer — S

UTILITIES:

POWER:

- Existing Power Pole
- Proposed Power Pole
- Existing Joint Use Pole
- Proposed Joint Use Pole
- Power Manhole — P
- Power Line Tower
- Power Transformer
- U/G Power Cable Hand Hole
- H-Frame Pole
- U/G Power Line LOS B (S.U.E.*) — P
- U/G Power Line LOS C (S.U.E.*) — P
- U/G Power Line LOS D (S.U.E.*) — P

TELEPHONE:

- Existing Telephone Pole
- Proposed Telephone Pole
- Telephone Manhole — T
- Telephone Pedestal — T
- Telephone Cell Tower
- U/G Telephone Cable Hand Hole
- U/G Telephone Cable LOS B (S.U.E.*) — T
- U/G Telephone Cable LOS C (S.U.E.*) — T
- U/G Telephone Cable LOS D (S.U.E.*) — T
- U/G Telephone Conduit LOS B (S.U.E.*) — TC
- U/G Telephone Conduit LOS C (S.U.E.*) — TC
- U/G Telephone Conduit LOS D (S.U.E.*) — TC
- U/G Fiber Optics Cable LOS B (S.U.E.*) — T FO
- U/G Fiber Optics Cable LOS C (S.U.E.*) — T FO
- U/G Fiber Optics Cable LOS D (S.U.E.*) — T FO

WATER:

- Water Manhole — W
- Water Meter
- Water Valve
- Water Hydrant
- U/G Water Line LOS B (S.U.E*) — W
- U/G Water Line LOS C (S.U.E*) — W
- U/G Water Line LOS D (S.U.E*) — W
- Above Ground Water Line — A/G Water

TV:

- TV Pedestal — C
- TV Tower
- U/G TV Cable Hand Hole — HH
- U/G TV Cable LOS B (S.U.E.*) — TV
- U/G TV Cable LOS C (S.U.E.*) — TV
- U/G TV Cable LOS D (S.U.E.*) — TV
- U/G Fiber Optic Cable LOS B (S.U.E.*) — TV FO
- U/G Fiber Optic Cable LOS C (S.U.E.*) — TV FO
- U/G Fiber Optic Cable LOS D (S.U.E.*) — TV FO

GAS:

- Gas Valve
- Gas Meter
- U/G Gas Line LOS B (S.U.E.*) — G
- U/G Gas Line LOS C (S.U.E.*) — G
- U/G Gas Line LOS D (S.U.E.*) — G
- Above Ground Gas Line — A/G Gas

SANITARY SEWER:

- Sanitary Sewer Manhole
- Sanitary Sewer Cleanout
- U/G Sanitary Sewer Line — SS
- Above Ground Sanitary Sewer — A/G Sanitary Sewer
- SS Forced Main Line LOS B (S.U.E.*) — FSS
- SS Forced Main Line LOS C (S.U.E.*) — FSS
- SS Forced Main Line LOS D (S.U.E.*) — FSS

MISCELLANEOUS:

- Utility Pole
- Utility Pole with Base
- Utility Located Object
- Utility Traffic Signal Box — S
- Utility Unknown U/G Line LOS B (S.U.E.*) — ?UTL
- U/G Tank; Water, Gas, Oil
- Underground Storage Tank, Approx. Loc. — UST
- A/G Tank; Water, Gas, Oil
- Geoenvironmental Boring
- U/G Test Hole LOS A (S.U.E.*)
- Abandoned According to Utility Records — AATUR
- End of Information — E.O.I.

PROJECT REFERENCE NO.	SHEET NO.
42306.1.1	1C-1
Location and Surveys	

SURVEY CONTROL SHEET B-5145

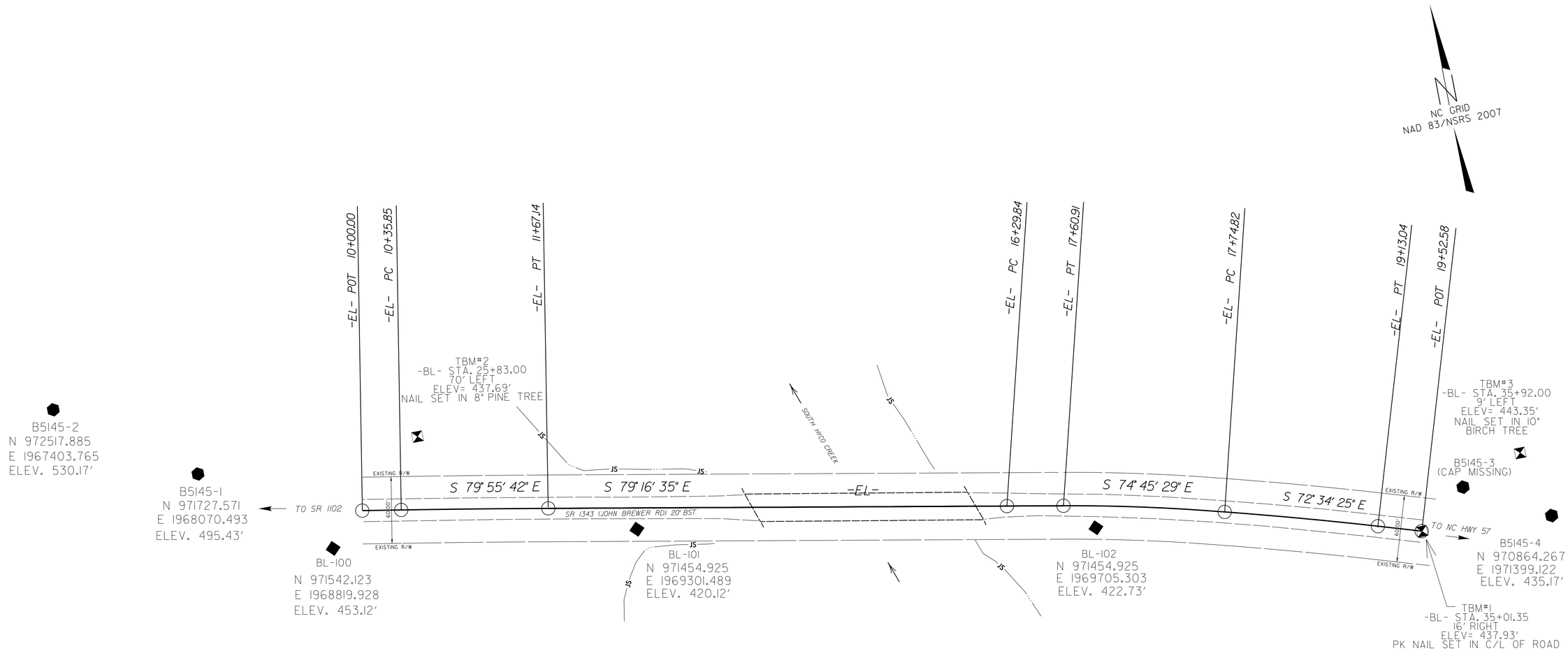

DATUM DESCRIPTION

THE LOCALIZED COORDINATE SYSTEM DEVELOPED FOR THIS PROJECT IS BASED ON THE STATE PLANE COORDINATES ESTABLISHED BY NCGS FOR MONUMENT "B5145-1"
WITH NAD 83/NSRS 2007 STATE PLANE GRID COORDINATES OF
NORTHING: 971727.5710 (ft) 1968070.493 (ft)
ELEVATION: 495.43'
THE AVERAGE COMBINED GRID FACTOR USED ON THIS PROJECT (GROUND TO GRID) IS: 0.99993747
THE N.C. LAMBERT GRID BEARING AND LOCALIZED HORIZONTAL GROUND DISTANCE FROM "" TO -L- STATION IS

ALL LINEAR DIMENSIONS ARE LOCALIZED HORIZONTAL DISTANCES
VERTICAL DATUM USED IS NAVD 88

NOTE: DRAWING NOT TO SCALE
GEOID G03NC

NOTES:

1. *THE CONTROL DATA FOR THIS PROJECT CAN BE FOUND ELECTRONICALLY BY SELECTING PROJECT CONTROL DATA AT:*
HTTPS://CONNECT.NCDOT.GOV/RESOURCES/LOCATION/

THE FILES TO BE FOUND ARE AS FOLLOWS:
B-5145_LS_CONTROL.TXT

⬢ *INDICATES GEODETIC CONTROL MONUMENTS USED OR SET FOR HORIZONTAL PROJECT CONTROL BY THE NCDOT LOCATION AND SURVEYS UNIT.*
PROJECT CONTROL ESTABLISHED USING GLOBAL POSITIONING SYSTEM.

6/2/99

5/1/2008
$$$$USERNAME$$$$
$$$$DATE$$$$
$$$$TIME$$$$
$$$$FILENAME$$$$

PROJECT REFERENCE NO.	SHEET NO.
42306.1.1	1C-2
Location and Surveys	

SURVEY CONTROL SHEET B-5145

NC GRID
NAD 83/NSRS 2007

BASELINE

POINT	DESC.	NORTH	EAST	ELEVATION	L STATION	OFFSET
2	B5145-2	972517.8850	1967403.7650	530.17'	OUTSIDE PROJECT LIMITS	
1	B5145-1	971727.5710	1968070.4930	495.43'	OUTSIDE PROJECT LIMITS	
100	BL-100	971542.1230	1968819.9280	453.12'	OUTSIDE PROJECT LIMITS	
101	BL-101	971454.9250	1969301.4890	420.12'	12+45.53	15.47 RT
102	BL-102	971378.9310	1969705.3030	422.73'	16+57.16	15.66 RT
3	B5145-3	971319.4120	1970064.2570	439.79'	OUTSIDE PROJECT LIMITS	
4	B5145-4	970864.2670	1971399.1220	435.17'	OUTSIDE PROJECT LIMITS	

EL POINT	N	E	BEARING	DIST	DELTA	D	L	T	R
POT	971514.053	1969062.704							
LINE			S 79°55'42.4" E	35.85					
PC	971507.783	1969098.005							
CURVE			S 79°36'08.7" E	131.29	00°39'07.5"(RT)	00°29'48.0"	131.29	65.64	11535.75
PT	971484.089	1969227.135							
LINE			S 79°16'35.0" E	462.71					
PC	971397.993	1969681.759							
CURVE			S 77°01'01.8" E	131.03	04°31'06.4"(RT)	03°26'50.8"	131.07	65.57	1661.98
PT	971368.555	1969809.442							
LINE			S 74°45'28.6" E	13.91					
PC	971364.899	1969822.859							
CURVE			S 73°39'57.0" E	138.21	02°11'03.3"(RT)	01°34'48.9"	138.22	69.12	3625.73
PT	971326.028	1969955.493							
LINE			S 72°34'25.3" E	39.55					
POT	971314.185	1969993.225							

BENCHMARKS

TBM1 ELEVATION - 437.93'
N 971314 E 1969994
L STATION 19+53.00
S 59°04'16.3" E DIST 0.43
PK NAIL IN C/L ROAD

TBM2 ELEVATION - 437.69'
N 971562 E 1969105
L STATION 10+33.00 55 LEFT
NAIL IN 8" PINE

TBM3 ELEVATION - 443.35'
N 971358 E 1970101
L STATION 19+53.00
N 67°42'12.9" E DIST 116.27
NAIL IN 10" BIRCH

DATUM DESCRIPTION

THE LOCALIZED COORDINATE SYSTEM DEVELOPED FOR THIS PROJECT IS BASED ON THE STATE PLANE COORDINATES ESTABLISHED BY NCGS FOR MONUMENT "B5145-1"
WITH NAD 83/NSRS 2007 STATE PLANE GRID COORDINATES OF
NORTHING: 971727.5710 (ft) 1968070.493 (ft)
ELEVATION: 495.43'
THE AVERAGE COMBINED GRID FACTOR USED ON THIS PROJECT (GROUND TO GRID) IS: 0.99993747
THE N.C. LAMBERT GRID BEARING AND LOCALIZED HORIZONTAL GROUND DISTANCE FROM "" TO -L- STATION IS

ALL LINEAR DIMENSIONS ARE LOCALIZED HORIZONTAL DISTANCES
VERTICAL DATUM USED IS NAVD 88

NOTE: DRAWING NOT TO SCALE
GEOID G03NC

NOTES:

1. *THE CONTROL DATA FOR THIS PROJECT CAN BE FOUND ELECTRONICALLY BY SELECTING PROJECT CONTROL DATA AT:*
   HTTPS://CONNECT.NCDOT.GOV/RESOURCES/LOCATION/

   THE FILES TO BE FOUND ARE AS FOLLOWS:
   B-5145_LS_CONTROL.TXT
   B-5145_LS_CONTROL.TXT

⬢ *INDICATES GEODETIC CONTROL MONUMENTS USED OR SET FOR HORIZONTAL PROJECT CONTROL BY THE NCDOT LOCATION AND SURVEYS UNIT.*
PROJECT CONTROL ESTABLISHED USING GLOBAL POSITIONING SYSTEM.

6/2/99
5/1/2018
$$$$BRGINRING$$$$

PROJECT REFERENCE NO.	SHEET NO.
42306.1.1	1D-1
Location and Surveys	

PROPOSED ALIGNMENTCONTROL SHEET B-5145

L

ALIGN	STATION	OFFSET	NORTH	EAST
L	10+50.00	-50.11	971554.6264	1969120.7558
L	10+50.00	-30.00	971534.8318	1969117.2149
L	10+50.00	50.00	971456.0818	1969103.1281
L	10+50.00	30.00	971475.7693	1969106.6498
L	11+00.00	50.00	971447.2095	1969152.1144
L	11+00.00	-50.00	971545.5698	1969170.1494
L	15+79.07	50.00	971360.8098	1969623.3255
L	15+79.07	-50.00	971459.1701	1969641.3605
L	16+25.00	50.00	971352.1874	1969667.1042
L	16+25.00	32.26	971369.5425	1969670.7596
L	16+25.00	-27.75	971428.2666	1969683.1283
L	16+25.00	-50.00	971450.0404	1969687.7144

DATUM DESCRIPTION

THE LOCALIZED COORDINATE SYSTEM DEVELOPED FOR THIS PROJECT
IS BASED ON THE STATE PLANE COORDINATES ESTABLISHED BY
NCGS FOR MONUMENT "B5145-1"
WITH NAD 83/NSRS 2007 STATE PLANE GRID COORDINATES OF
NORTHING: 971727.5710 (ft) 1968070.493 (ft)
ELEVATION: 495.43'
THE AVERAGE COMBINED GRID FACTOR USED ON THIS PROJECT
(GROUND TO GRID) IS: 0.99993747
THE N.C. LAMBERT GRID BEARING AND
LOCALIZED HORIZONTAL GROUND DISTANCE FROM
"" TO -L- STATION IS

ALL LINEAR DIMENSIONS ARE LOCALIZED HORIZONTAL DISTANCES
VERTICAL DATUM USED IS NAVD 88

NOTE: DRAWING NOT TO SCALE

NOTES:

1. *THE CONTROL DATA FOR THIS PROJECT CAN BE FOUND ELECTRONICALLY BY SELECTING PROJECT CONTROL DATA AT:*
   HTTPS://CONNECT.NCDOT.GOV/RESOURCES/LOCATION/

   THE FILES TO BE FOUND ARE AS FOLLOWS:
   B-5145_LS_CONTROL.TXT
   B-5145_LS_CONTROL.TXT

⬢ *INDICATES GEODETIC CONTROL MONUMENTS USED OR SET FOR HORIZONTAL PROJECT CONTROL BY THE NCDOT LOCATION AND SURVEYS UNIT.*
PROJECT CONTROL ESTABLISHED USING GLOBAL POSITIONING SYSTEM.

6/2/99
5/1/2018
$$$$$$$(dgnlib)Pro\B5145_LS_1D-1.dgn
$$$$$$$USERNAME$$$$$$$

PROJECT REFERENCE NO.	SHEET NO.
B-5145	2A-1

ROADWAY DESIGN ENGINEER
NORTH CAROLINA PROFESSIONAL SEAL 034407 ENGINEER ANDREW P. YOUNG
DocuSigned by: Andrew P. Young 5/17/2018
EF21D93DD62F4EF

PAVEMENT DESIGN ENGINEER
NORTH CAROLINA PROFESSIONAL SEAL 22896 ENGINEER CLARK S. MORRISON
DocuSigned by: Clark Morrison 5/18/2018
B0A110DD1E004C4...

STEWART
firm license No. C-1051
421 Fayetteville St.
Suite 400
Raleigh, NC 27601
T 919.380.8750
www.stewartinc.com

DOCUMENT NOT CONSIDERED FINAL UNLESS ALL SIGNATURES COMPLETED

PAVEMENT SCHEDULE

(FINAL PAVEMENT DESIGN)

C1	PROP. APPROX. 3″ ASPHALT CONCRETE SURFACE COURSE, TYPE S9.5B, AT AN AVERAGE RATE OF 165 LBS. PER SQ. YD. IN EACH OF TWO LAYERS.
C2	PROP. APPROX. 1½″ ASPHALT CONCRETE SURFACE COURSE, TYPE S9.5B, AT AN AVERAGE RATE OF 165 LBS. PER SQ. YD.
C3	PROP. VAR. DEPTH ASPHALT CONCRETE SURFACE COURSE, TYPE S9.5B, AT AN AVERAGE RATE OF 110 LBS. PER SQ. YD. PER 1″ DEPTH. TO BE PLACED IN LAYERS NOT TO EXCEED 1½″ IN DEPTH.
D1	PROP. APPROX. 4″ ASPHALT CONCRETE INTERMEDIATE COURSE, TYPE I19.0C, AT AN AVERAGE RATE OF 456 LBS. PER SQ. YD.
D2	PROP. VAR. DEPTH ASPHALT CONCRETE INTERMEDIATE COURSE, TYPE I19.0C, AT AN AVERAGE RATE OF 114 LBS. PER SQ. YD. PER 1″ DEPTH, TO BE PLACED IN LAYERS NOT LESS THAN 2½″ IN DEPTH OR GREATER THAN 4″ IN DEPTH.
E1	PROP. APPROX. 4″ ASPHALT CONCRETE BASE COURSE, TYPE B25.0C, AT AN AVERAGE RATE OF 456 LBS. PER SQ. YD.
R	SHOULDER BERM GUTTER
T	EARTH MATERIAL
U	EXISTING PAVEMENT
W	WEDGING (SEE THIS SHEET FOR WEDGING DETAIL)

NOTE: PAVEMENT EDGE SLOPES ARE 1:1, UNLESS SHOWN OTHERWISE

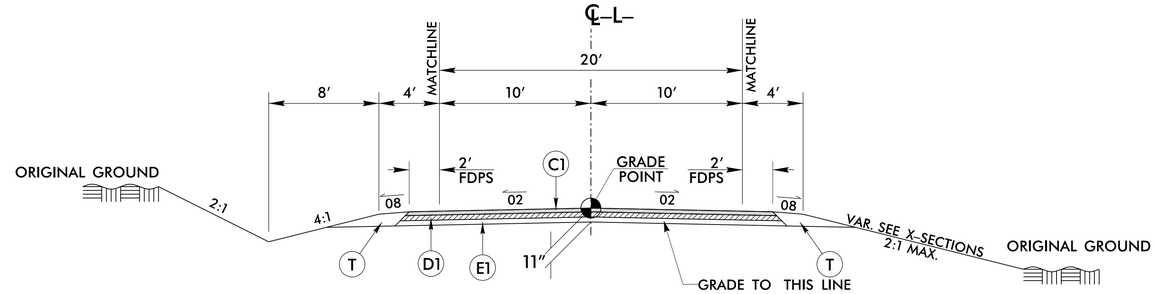

TYPICAL SECTION NO. 1

–L– STA. 10+50.00 TO –L– STA. 13+43.56 (BEGIN BRIDGE)
–L– STA. 15+56.44 (END BRIDGE) TO –L– STA. 18+50.00

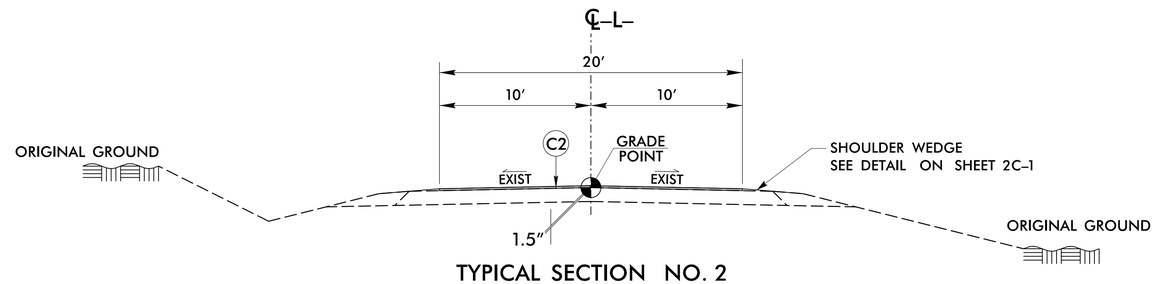

TYPICAL SECTION NO. 2

OVERLAY EXISTING ROADWAY BETWEEN B-5145 & B-5322
APPROX. LENGTH = 315 FEET (B-5145)
APPROX. LENGTH = 315 FEET (B-5322)

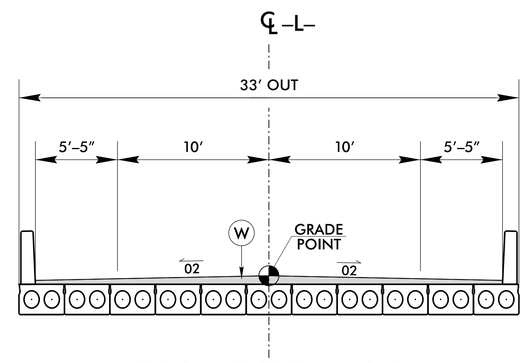

TYPICAL SECTION NO. 3

–L– STA. 13+43.56 TO –L– STA. 15+56.44

NOTE: SEE STRUCTURE PLANS FOR PAVEMENT DEPTHS ON STRUCTURE

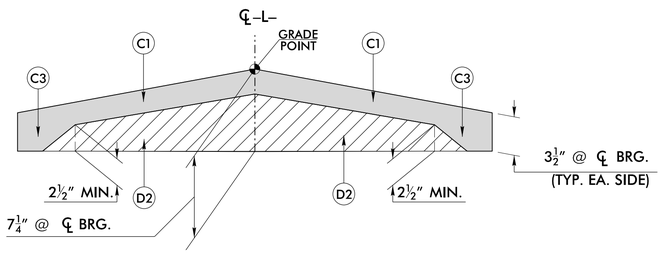

DETAIL SHOWING METHOD OF WEDGING ON BRIDGE

USE IN CONJUNCTION WITH BRIDGE TYPICAL SECTION

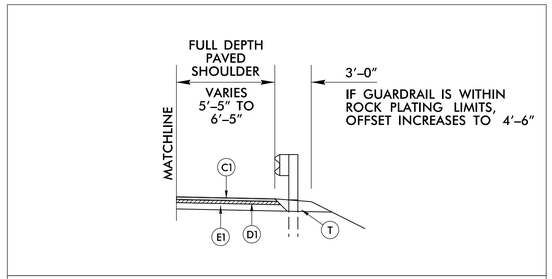

DETAIL SHOWING PAVING TO THE FACE OF GUARDRAIL

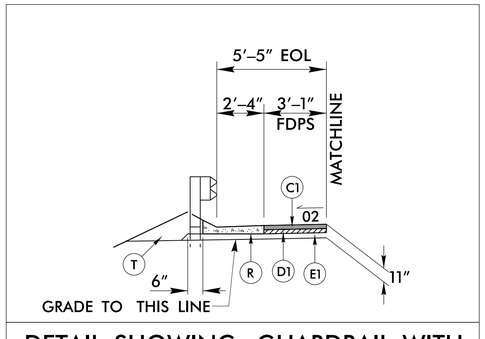

DETAIL SHOWING GUARDRAIL WITH SHOULDER BERM GUTTER

USE SHOULDER BERM GUTTER AT THE FOLLOWING LOCATIONS:
–L– STA. 13+05.00 TO –L– STA. 13+27.23 (BEGIN APPROACH SLAB) (LEFT)
–L– STA. 13+05.00 TO –L– STA. 13+41.90 (BEGIN APPROACH SLAB) (RIGHT)

REVISIONS

5/14/99

5/17/2018
I:\Roadway\Proj\B5145_Rdy_typ.dgn
USER:Rbowling

PROJECT REFERENCE NO.	SHEET NO.
B-5145	2C-1

NOTES:
1) DETAIL DOES NOT APPLY TO OGAFC AND ULTRA-THIN BONDED WEARING COURSE.
2) BACKFILL SHOULDER WITH APPROVED MATERIAL.
3) THE SHOULDER WEDGE DEVICE MAY BE DISENGAGED AT PAVED DRIVEWAYS AND SIDE STREETS.

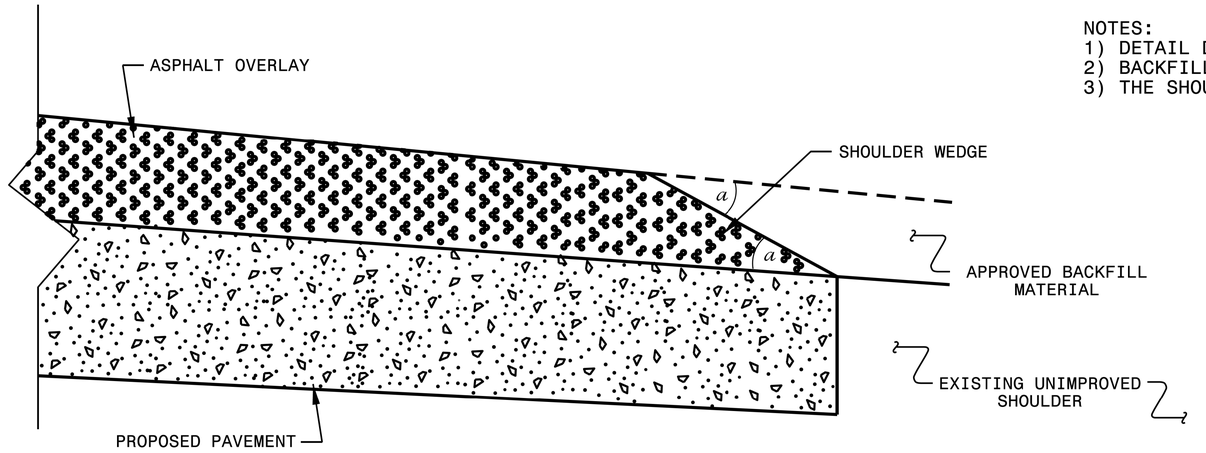

SHOULDER WEDGE DETAIL

(Resurfacing Projects w/ Widening or with Existing Paved Shoulder having no dropoffs)

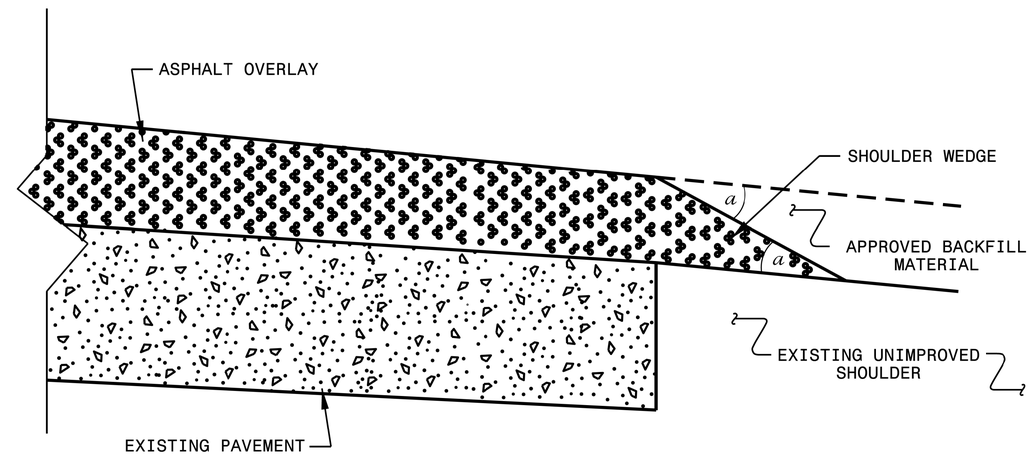

SHOULDER WEDGE DETAIL

(Resurfacing Projects w/ NO Widening)

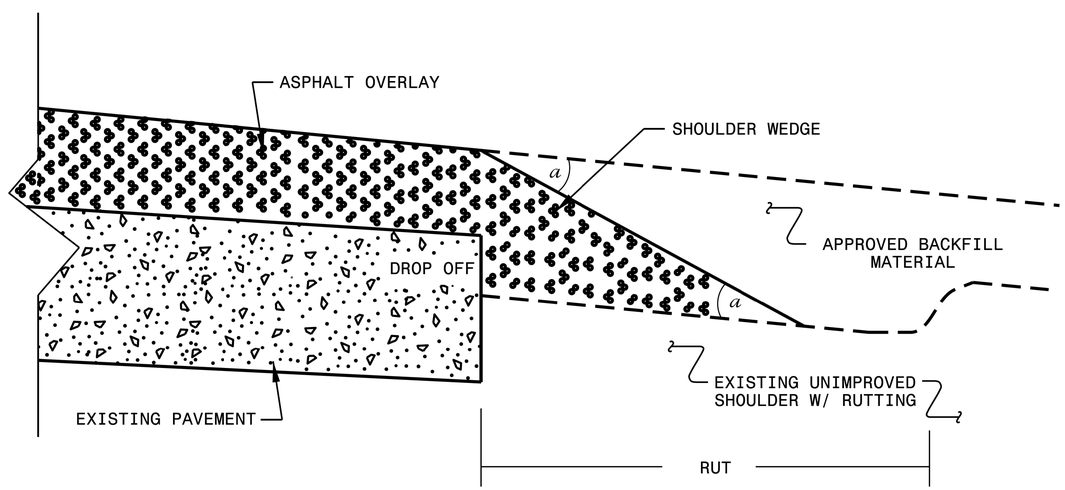

SHOULDER WEDGE DETAIL

(Resurfacing Adjacent to Rutted Shoulder)

- SHOULDER WEDGE ANGLE = 30°

NORTH CAROLINA PROFESSIONAL SEAL 022966 ENGINEER JOHN S. HOWETON
5/9/2018
DocuSigned by: John S. Howeton
873F3D17DCDC45F...

CONTRACT STANDARDS AND DEVELOPMENT UNIT
Office 919-707-6950 FAX 919-250-4119

SHOULDER WEDGE DETAILS

ORIGINAL BY:	T.SPELL	DATE:	7-19-11
MODIFIED BY:		DATE:	10/16/12
CHECKED BY:		DATE:	
FILE SPEC.:	s:usr/details/stand/shoulderwedgedetail.dgn		

$$$$SYSTIME$$$$
$$$$USERNAME$$$$

PROJECT REFERENCE NO.	SHEET NO.
B-5145	2C-2

DOCUMENT NOT CONSIDERED FINAL UNLESS ALL SIGNATURES COMPLETED

STATE OF NORTH CAROLINA
DEPT. OF TRANSPORTATION
DIVISION OF HIGHWAYS
RALEIGH, N.C.

ROADWAY DETAIL DRAWING FOR
GUARDRAIL INSTALLATION

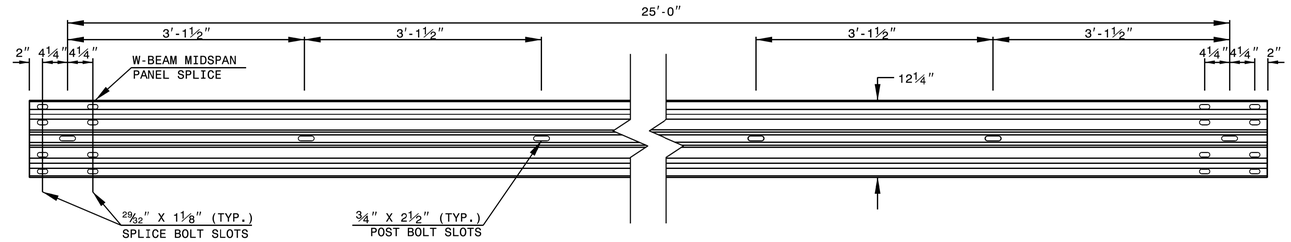

STANDARD W-BEAM GUARDRAIL

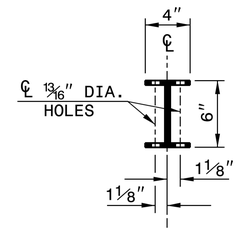

PLAN

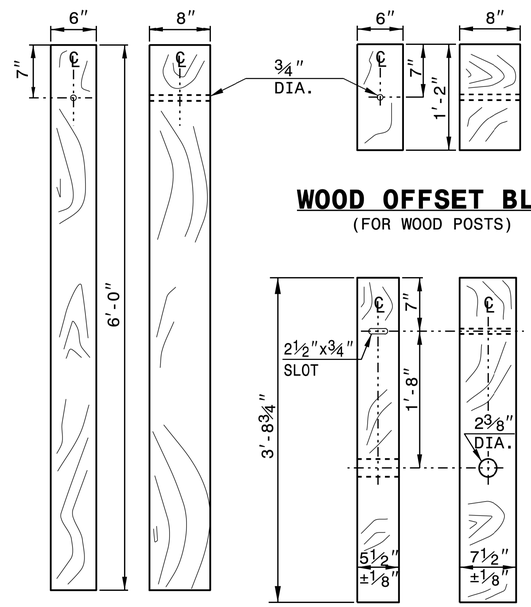

WOOD OFFSET BLOCK
(FOR WOOD POSTS)

STANDARD LINE POST

SHORT WOOD BREAKAWAY POST

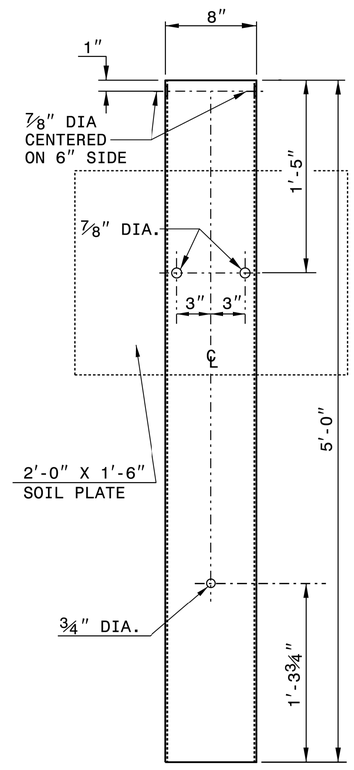

STEEL TUBE
TS 6"x8"x0.1875"

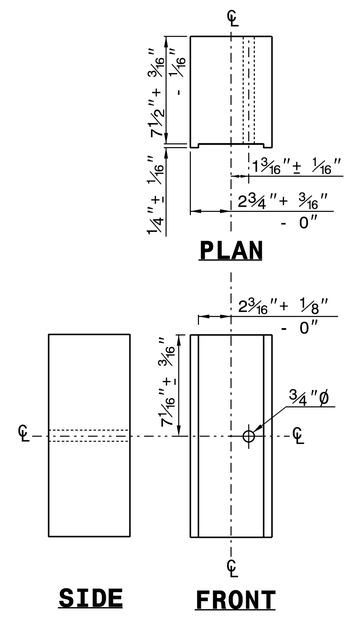

ROUTED OFFSET BLOCK

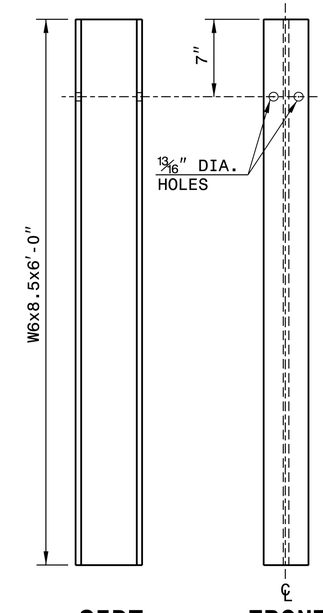

"W6" STEEL POST

SYSTEM PARTS

SHEET 6 OF 8
862D02

STATE OF NORTH CAROLINA
DEPT. OF TRANSPORTATION
DIVISION OF HIGHWAYS
RALEIGH, N.C.

ROADWAY DETAIL DRAWING FOR
GUARDRAIL INSTALLATION

SHEET 6 OF 8
862D02

NORTH CAROLINA PROFESSIONAL SEAL 022966 ENGINEER JOEL S. HOWERTON
5/9/2018

DocuSigned by: Joel S Howerton
873F3D17DCDC45F...

CONTRACTS STANDARDS AND DEVELOPMENT UNIT
Office 919-707-6950 FAX 919-250-4119

SEE TITLE BLOCK

ORIGINAL BY: J.HOWERTON DATE: 3-7-2018
MODIFIED BY: DATE:
CHECKED BY: DATE:
FILE SPEC.:

PROJECT REFERENCE NO.	SHEET NO.
B-5145	2G-1

GEOTECHNICAL ENGINEER
5/17/2018
NORTH CAROLINA PROFESSIONAL SEAL 028422 ENGINEER DONALD W. BROWN JR.
DocuSigned by: BROWN
C06817EE70411
SIGNATURE DATE

ENGINEER
SIGNATURE DATE

DOCUMENT NOT CONSIDERED FINAL UNLESS ALL SIGNATURES COMPLETED

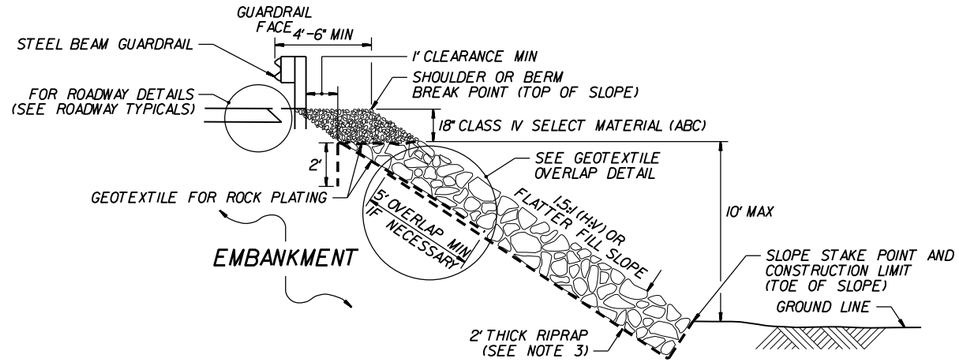

ROCK PLATING DETAIL NO. 1 – TYPICAL SECTION

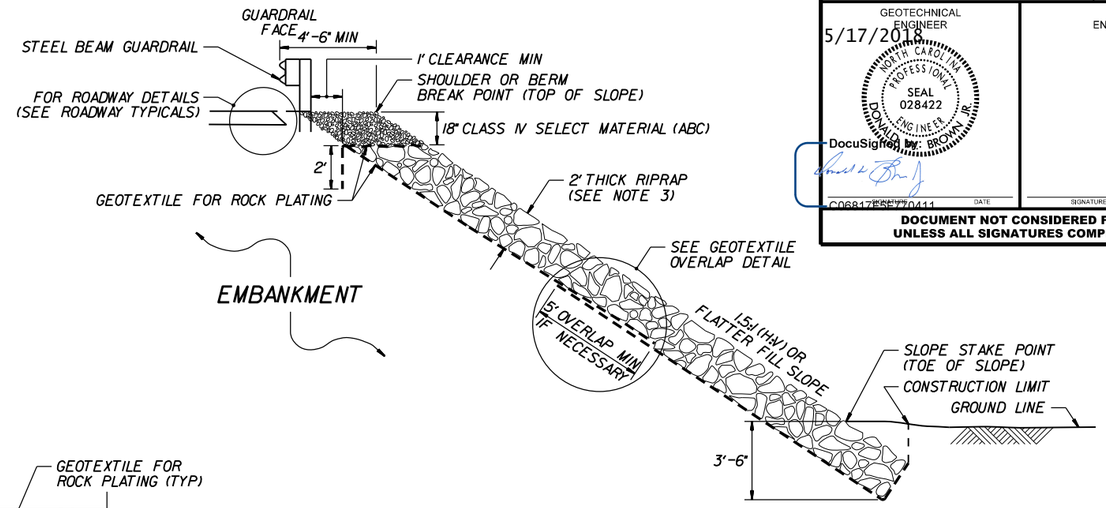

ROCK PLATING DETAIL NO. 2 – TYPICAL SECTION

ROCK PLATING

USE ROCK PLATING AT FOLLOWING LOCATIONS:

LINES	BEGINNING SLOPE	APPROX. STATION	ENDING SLOPE	APPROX. STATION	LOCATION LT/RT	ROCK PLATING DETAIL NO. 1/2/3	RIPRAP CLASS	SY
-L-	2:1	11+50	1.5:1	13+25	LT	1,3	NOTE 3	315
-L-	*	13+00	1.5:1	13+46	RT	1,3	NOTE 3	85

NOTES:
1.SEE ROADWAY PLANS AND SUMMARY SHEETS FOR ROCK PLATING LOCATIONS.

2.FOR STANDARD ROCK PLATING,SEE SECTION 275 OF THE STANARD SPECIFICATIONS.

3.USE CLASS 1,2 OR B RIPRAP FOR ROCK PLATING LOCATIONS.

**EXISTING SLOPE - NO MODIFICATION

ESTIMATED TOTAL QUANTITY OF ROCK PLATING = 400 SY

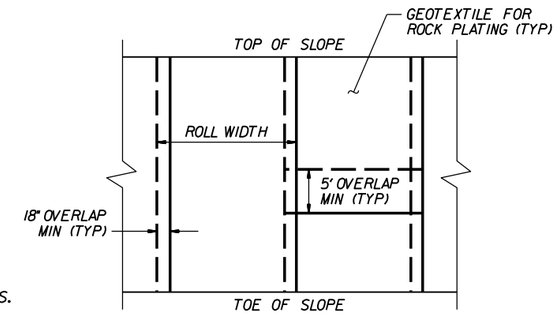

GEOTEXTILE OVERLAP DETAIL
(PLAN VIEW)

ROCK EMBANKMENTS

USE ROCK EMBANKMENTS AT FOLLOWING LOCATIONS:

-LINE-	APPROX. BEGINNING STATION	APPROX. ENDING STATION	LOCATION LT/RT
-L-	11+80	13+25	LT
-L-	13+20	13+46	LT

4.CONSTRUCT ROCK EMBANKMENTS TO THE ELEVATION SHOWN IN THE ROCK EMBANKMENTS & ROCK PLATING DETAIL NO.3,OR 2 FT ABOVE THE NORMAL WATER SURFACE. AND ACCORDING TO THE ROCK EMBANKMENTS SPECIAL PROVISION.

5.FILL VOIDS IN THE TOP OF ROCK EMBANKMENTS WITH CLASS B AND CLASS A RIP RAP.

6.PLACE #57 STONE (SELECT MATERIAL,CLASS VI) UP TO 1 FT.ABOVE ROCK EMBANKMENTS AS SHOWN IN THIS PLAN.

8.INSTALL GEOTEXTILE ON TOP OF NO.57 STONE IN ACCORDANCE WITH THE ARTICLE 270-3 OF THE STANDARD SPECIFICATIONS.

7.CONSTRUCT ROCK PLATING ABOVE ROCK EMBANKMENTS FROM ELEVATION SHOWN IN THE ROCK EMBANKMENTS & ROCK PLATING DETAIL NO.3 TO THE SHOULDER HINGE POINT AND ACCORDING TO THE SECTION 275 OF THE STANDARD SPECIFICATIONS.

8.FOR ROCK EMBANKMENTS,SEE ROCK EMBANKMENTS SPECIAL PROVISION.

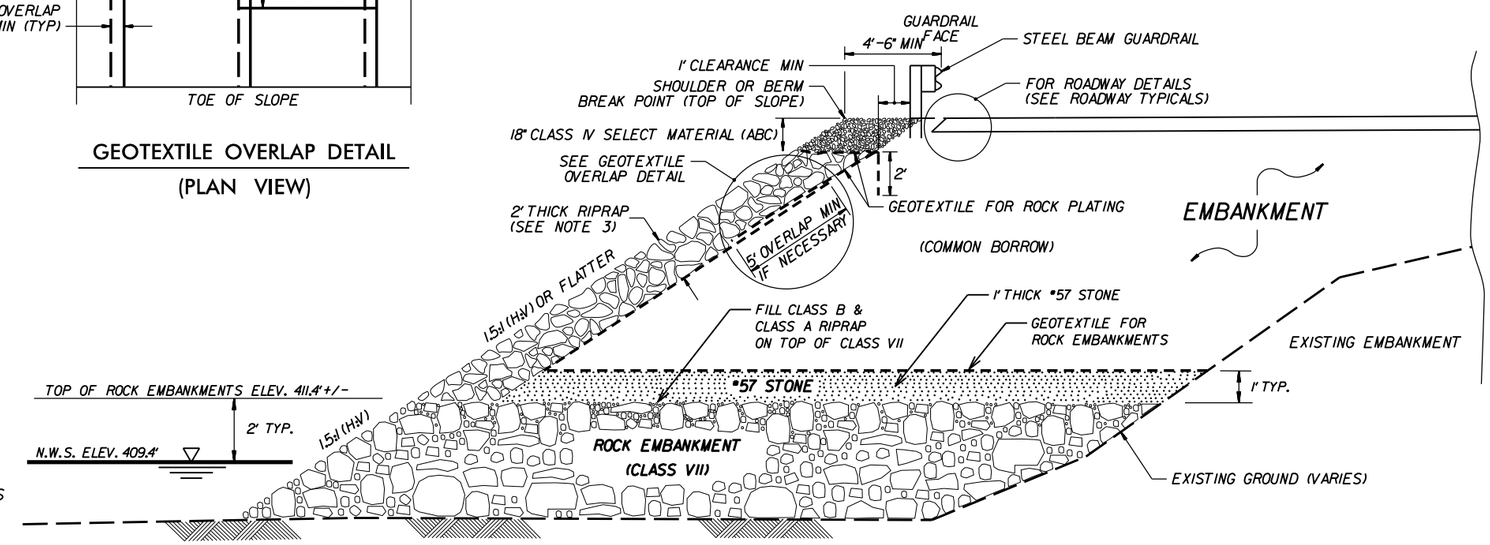

ROCK EMBANKMENTS & ROCK PLATING DETAIL NO. 3 – TYPICAL SECTION

ESTIMATED MATERIAL QUANTITIES FOR ROCK EMBANKMENTS

ROCK EMBANKMENTS (SELECT MATERIAL,CLASS VII) = 550 TONS

RIP RAP CLASS A = 85 TONS

RIP RAP CLASS B = 85 TONS

#57 STONE (SELECT MATERIAL,CLASS VI) = 85 TONS

GEOTEXTILE FOR ROCK EMBANKMENTS = 225 SY

PREPARED BY: D.W. BROWN, PE	DATE: 05-2018
REVIEWED BY: CT. TANG, EI	DATE: 05-2018

STEWART
5400 OLD POOLE RD
RALEIGH, NC 27610
T 919.386.0750
firm License #: C-1051
www.stewartinc.com
PROJECT #:B18009.00

ROCK EMBANKMENTS & ROCK PLATING

NOTES & DETAILS

REVISIONS

NO.	BY	DATE	NO.	BY	DATE
1	-	-	3	-	-
2			4		

8/17/99

REVISIONS

SUMMARY OF EARTHWORK

IN CUBIC YARDS

Station	Station	Uncl. Excav.	Embank. +%	Borrow	Waste
-L- Sta. 10+50.00	-L- Sta. 13+43.56	178	527	349	
-L- Sta. 13+56.44	-L- Sta. 18+50.00	63	428	365	
SUBTOTAL:		241	955	714	
PROJECT TOTAL:		241	955	714	
EST. 5% REPLACE TOPSOIL ON BORROW PIT				36	
GRAND TOTALS:		241	955	750	
SAY:		**250**		**800**	

UNDERCUT EXCAVATION = 400 CY (Contingency)
SELECT GRANULAR MATERIAL = 400 CY (Contingency)
GEOTEXTILE FOR SOIL STABILIZATION = 400 SY (Contengency)
(Total square yards of Geotextile for Soil Stabilization is only the contingent quantity and may only represent a portion of the geotextile quantity shown in the Item Sheets of the Proposal.)

Note: Approximate quantities only. Unclassified Excavation, Borrow Excavation, Fine Grading, Clearing and Grubbing, and Removal of Existing Pavement will be paid for at the contract lump sum price for grading.

Note: Earthwork quantities are calculated by the Roadway Design Unit. These earthwork quantities are based in part on subsurface data provided by the Geotechnical Engineering Unit.

PAVEMENT REMOVAL SUMMARY

IN SQUARE YARDS

SURVEY LINE	Station	Station	LOCATION LT/RT/CL	ASPHALT REMOVAL	ASPHALT BREAKUP	CONCRETE REMOVAL	CONCRETE BREAKUP
-L-	10+50.00	13+49.64	CL	664.60			
-L-	15+49.70	18+50.00	CL	674.96			
		TOTAL:		1,339.55			
		SAY:		**1,340**			

SHOULDER BERM GUTTER SUMMARY

IN LINEAR FEET

LINE	Station	Station	LENGTH
-L- LT	13+05.00	13+25.31	20.31
-L- RT	13+05.00	13+40.41	35.41
		TOTAL:	55.72
		SAY:	**60**

"N" = DISTANCE FROM EDGE OF LANE TO FACE OF GUARDRAIL
TOTAL SHOULDER WIDTH = DISTANCE FROM EDGE OF TRAVEL LANE TO SHOULDER BREAK POINT.
FLARE LENGTH = DISTANCE FROM LAST SECTION OF PARALLEL GUARDRAIL TO END OF GUARDRAIL
W = TOTAL WIDTH OF FLARE FROM BEGINNING OF TAPER TO END OF GUARDRAIL

GUARDRAIL SUMMARY

G = GATING IMPACT ATTENUATOR TYPE 350
NG = NON-GATING IMPACT ATTENUATOR TYPE 350

SURVEY LINE	BEG. STA.	END STA.	LOCATION	LENGTH			WARRANT POINT		"N" DIST. FROM E.O.L.	TOTAL SHOUL WIDTH	FLARE LENGTH		W		ANCHORS								IMPACT ATTENUATOR TYPE 350		SINGLE FACED CONCRETE BARRIER	REMOVE EXISTING GUARDRAIL	REMOVE & STOCKPILE EXISTING GUARDRAIL	REMARKS
				STRAIGHT	SHOP CURVED	DOUBLE FACED	APPROACH END	TRAILING END			APPROACH END	TRAILING END	APPROACH END	TRAILING END	XI MOD	XI	GREU, TL-3	M-350	XIII	CAT-1	VI MOD	BIC	TYPE III	G	NG				
-L-	10+90.91	13+34.66	LT	243.75'				13+34.66	5'-5"	8'-5"		1'		50'			1						1				251.83'		TOTAL SHOULDER WIDTH IS INCREASED TO 9'-11" WITHIN LIMITS OF ROCK PLATING
-L-	11+08.71	13+52.46	RT	243.75'			13+52.46		5'-5"	8'-5"	1'		50'				1						1				252.09'		
-L-	15+47.54	16+22.54	LT	75'			15+47.54		5'-5"	8'-5"	1'		50'				1						1				27.29'		
-L-	15+65.34	16+40.34	RT	75'				15+65.34	5'-5"	8'-5"		1'		50'			1						1				27'		
			SUBTOTAL:	637.50'																							558.21'		
		LESS ANCHOR DEDUCTIONS:																											
		TYPE III (4 @ 18.75')		-75'																									
		GREU, TL-3 (4 @ 50')		-200																									
			TOTAL:	362.50'																							558.21'		
			SAY:	375'																							560'		
		ADDITIONAL GUARDRAIL POSTS = 5 EA																											

5/1/2018
USER: cjbell
I:\B5145_Rdy_sum_3B-1.dgn

COMPUTED BY:	CAC	DATE:	5/17/2017
CHECKED BY:	Ecological Engineering, LLP	DATE:	5/17/2017

PROJECT REFERENCE NO.	SHEET NO.
B-5145	3D-1

NORTH CAROLINA DEPARTMENT OF TRANSPORTATION
DIVISION OF HIGHWAYS

Note: Invert Elevations indicated are for Bid Purposes only and shall not be used for project construction stakeout. See "Standard Specifications For Roads and Structures, Section 300-5".

LIST OF PIPES, ENDWALLS, ETC. (FOR PIPES 48 INCHES & UNDER)

STATION	LOCATION (LT, RT, OR CL)*	STRUCTURE NO. FROM	STRUCTURE NO. TO	TOP ELEVATION	INVERT ELEVATION	INVERT ELEVATION	SLOPE CRITICAL	DRAINAGE PIPE (RCP, CSP, CAAP, HDPE, or PVC) SIZE 12"	15"	18"	24"	30"	36"	42"	48"	DO NOT USE RCP	DO NOT USE CSP	DO NOT USE CAAP	DO NOT USE HDPE	C.S. PIPE SIZE 12"	15"	18"	24"	30"	36"	42"	48"	R.C. PIPE CLASS III SIZE 12"	15"	18"	24"	30"	36"	42"	48"	R.C. PIPE CLASS IV SIZE 12"	15"	18"	24"	30"	36"	42"	48"
THICKNESS OR GAUGE																				.064	.064	.064	.064	.079	.079	.109	.109																
-L- 13+13	LT	0401		420.4																																							
		0401	0403		417.6	413.3															16																						
-L- 13+13	RT	0402		420.4																																							
		0402	0401		417.7	417.6																															28						
-L- 10+86	RT	0404																																									
SHEET TOTALS																					16																28						

STATION	** " R.C. PIPE (CLASS V)	*** " RC PIPE CULVERTS, CONTRACTOR DESIGN	**** " RC PIPE CULVERTS, CONTRACTOR DESIGN	15" SIDE DRAIN PIPE	18" SIDE DRAIN PIPE	ENDWALLS STD. 838.01 838.11 OR STD. 838.80 (UNLESS NOTED OTHERWISE) CU. YARDS R.C.P.	ENDWALLS CU. YARDS C.S.P.	QUANTITIES FOR DRAINAGE STRUCTURES PER EACH (0" THRU 5.0')	LIN. FT. A 5.0' THRU 10.0'	LIN. FT. B 10.0' AND ABOVE	*TOTAL L.F. FOR PAY QUANTITY SHALL BE COL. "A" + (1.3 X COL. "B")	C.B. STD. 840.01 OR STD. 840.02	FRAME, GRATES, AND HOOD STANDARD 840.03 TYPE OF GRATE E	F	G	CONCRETE TRANSITIONAL SECTION DROP INLET	CATCH BASIN	D.I. STD. 840.14 OR STD. 840.15	D.I. FRAME WITH TWO GRATES STD. 840.16	G.D.I. TYPE "A" STD. 840.17 OR 840.26	G.D.I. TYPE "B" STD. 840.18 OR 840.27	G.D.I. TYPE "D" STD. 840.19 OR 840.28	G.D.I. FRAME WITH GRATE STD. 840.20	G.D.I. FRAME WITH TWO GRATES STD. 840.22	G.D.I. (N.S.) FRAME WITH GRATE STD. 840.24	G.D.I. (N.S. FLAT) FRAME WITH TWO GRATES STD. 840.29	J.B. STD. 840.31 OR 840.32	T.B.D.I. STD. 840.35	15" C.S. ELBOW			DRAINAGE PIPE ELBOWS NO. & SIZE	CONC. & BRICK PIPE PLUG, C.Y. STD. 840.71	CONC. COLLARS CL. "B" C.Y. STD. 840.72	PIPE REMOVAL LIN. FT.	REMARKS
-L- 13+13								1																				1		1													
																															2												
-L- 13+13								1																				1		1													
-L- 10+86				32																																							
SHEET TOTALS				32				2																				2		2	2												

ABBREVATIONS

C.B.	CATCH BASIN
N.D.I.	NARROW DROP INLET
D.I.	DROP INLET
G.D.I.	GRATED DROP INLET
G.D.I.(N.S.)	(NARROW SLOT)
J.B.	JUNCTION BOX
M.H.	MANHOLE
T.B.D.I.	TRAFFIC BEARING DROP INLET
T.B.J.B.	TRAFFIC BEARING JUNCTION BOX

REVISIONS

8/17/99

5/1/2018
...\B5145_Rdy_sum_3D-1.dgn
USER:Brown

SUMMARY OF AGGREGATE SUBGRADE/STABILIZATION

LINE	Station	Station	Aggregate Type ASU/AST	Aggregate Thickness INCHES	Shallow Undercut CY	Class IV Subgrade Stabilization TONS	Geotextile for Soil Stabilization SY	Stabilizer Aggregate TONS	Class IV Aggregate Stabilization TONS
CONTINGENCY			ASU		100	200	300		
			TOTAL CY/TONS/SY:		100	200	300*		

ASU = Aggregate Subgrade, AST = Aggregate Stabilization

***Total square yards of Geotextile for Soil Stabilization is only the estimated quantity for ASU/AST and may only represent a portion of the geotextile quantity shown in the Item Sheets of the Proposal.**

REVISIONS

8/17/99

5/17/2018
I:\B-5145\B5145_Rdy_sum_3G-1.dgn

PROJECT REFERENCE NO.	SHEET NO.
B-5145	4

ROADWAY DESIGN ENGINEER
NORTH CAROLINA PROFESSIONAL SEAL 034407 ENGINEER ANDREW P. YOUNG
DocuSigned by: Andrew P. Young
EF21D92DD62F4EF
5/9/2018

HYDRAULICS ENGINEER
NORTH CAROLINA PROFESSIONAL SEAL 20147 ENGINEER FRANK F. FLEMING
DocuSigned by: Frank F. Fleming
81DD721AA9F4A46
5/9/2018

STEWART
firm License No. C-1051
421 Fayetteville St.
Suite 400
Raleigh, NC 27601
T 919.380.8750
www.stewartinc.com

NC FIRM LICENSE No F-1148
1155 SE Cary Parkway, Suite 101
Cary, NC 27518
(919) 362-0455

ECOLOGICAL ENGINEERING

DOCUMENT NOT CONSIDERED FINAL UNLESS ALL SIGNATURES COMPLETED

REVISIONS

5/14/99

-L-

PI Sta 10+67.93	PI Sta 16+46.48	PI Sta 18+30.12
Δ = 0° 19' 07.0" (RT)	Δ = 4° 24' 43.0" (RT)	Δ = 2° 37' 27.1" (RT)
D = 0° 29' 48.0"	D = 3° 16' 26.6"	D = 1° 34' 48.9"
L = 641.5'	L = 134.76'	L = 166.06'
T = 321.07'	T = 67.41'	T = 83.05'
R = 11,535.75'	R = 1,750.00'	R = 3,625.73'
	Runoff = 80'	Runoff = 80'
	S_e = 4%	S_e = 4%

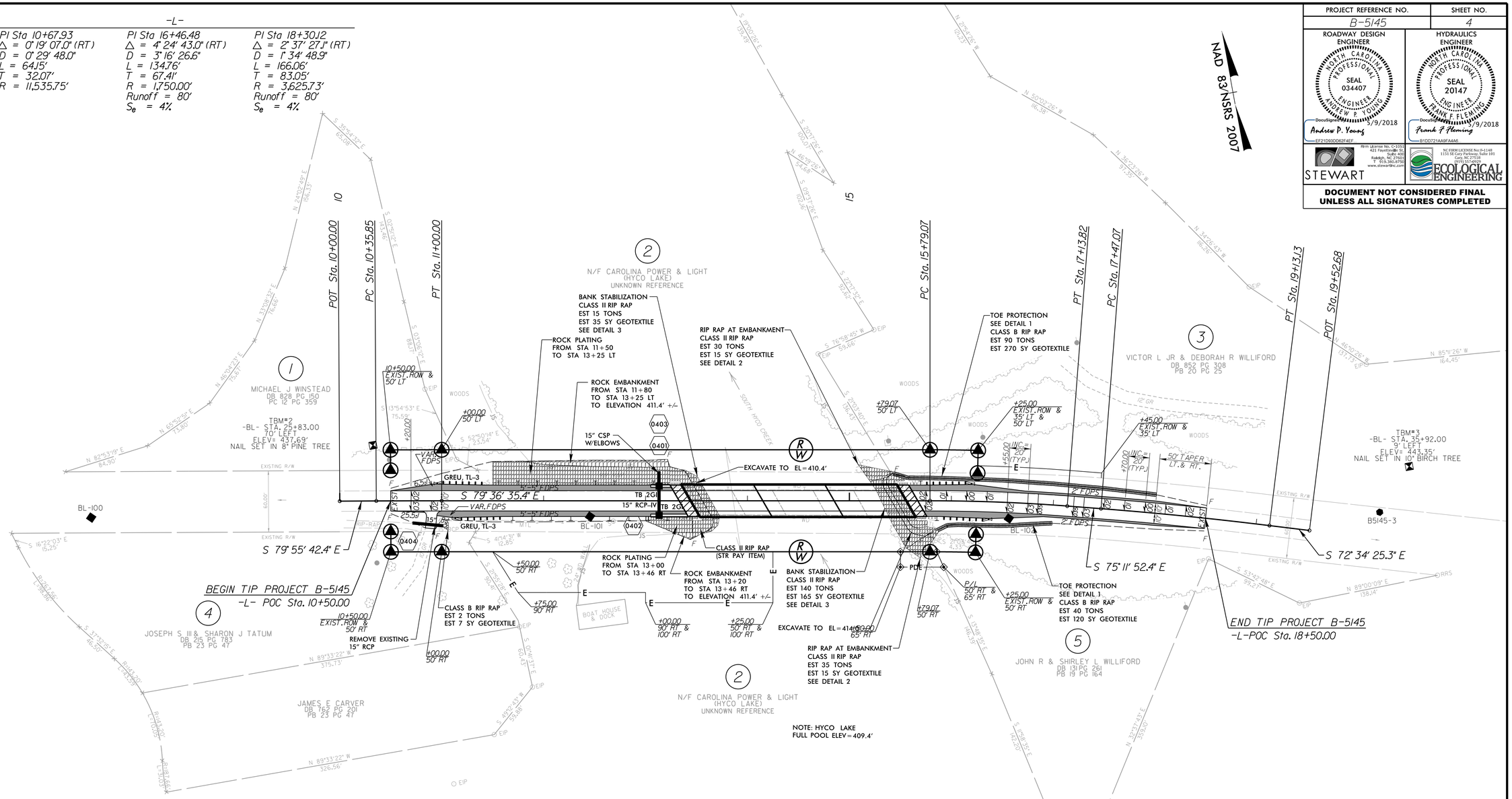

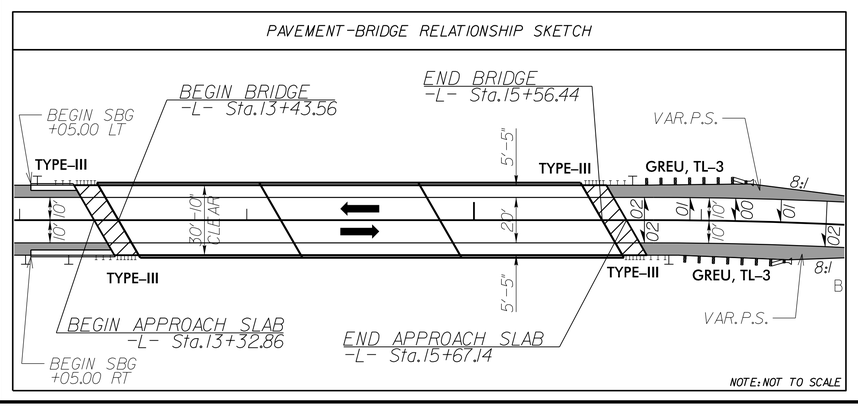

DETAIL 1
TOE PROTECTION
(Not to Scale)

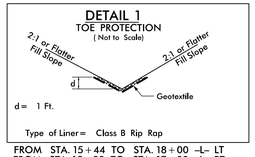

d= 1 Ft.

Type of Liner= Class B Rip Rap

FROM STA. 15+44 TO STA. 18+00 -L- LT
FROM STA. 15+88 TO STA 17+00 -L- RT

DETAIL 2
RIP RAP AT EMBANKMENT
(Not to Scale)

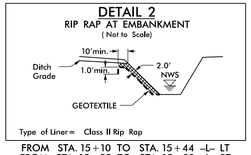

Type of Liner= Class II Rip Rap

FROM STA. 15+10 TO STA. 15+44 -L- LT
FROM STA. 15+55 TO STA. 15+88 -L- RT

DETAIL 3
BANK STABILIZATION
(Not to Scale)

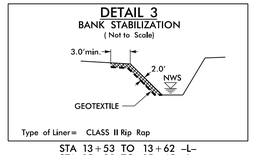

Type of Liner= CLASS II Rip Rap

STA 13+53 TO 13+62 -L-
STA 15+30 TO 15+45 -L-

ALL DRIVEWAY RADII ARE 5' UNLESS OTHERWISE NOTED

FOR -L- PROFILE, SEE SHEET 5

FOR STRUCTURE PLANS, SEE SHEETS S-1 THRU S-22

5/1/2018
r:\b5145_Rdy_psh_04.dgn

PROJECT REFERENCE NO.	SHEET NO.
B-5145	5

ROADWAY DESIGN ENGINEER
NORTH CAROLINA PROFESSIONAL SEAL 034407 ENGINEER ANDREW P. YOUNG
DocuSigned by: Andrew P. Young 7/9/2018
EF21D93DD82F4EF...

HYDRAULICS ENGINEER
NORTH CAROLINA PROFESSIONAL SEAL 20147 ENGINEER FRANK F. FLEMING
DocuSigned by: Frank F. Fleming 7/9/2018
B1DD721AA5FA4A6...

STEWART
Firm License No. C-1051
421 Fayetteville St.
Suite 400
Raleigh, NC 27601
T 919.380.8750
www.stewartinc.com

NC FIRM LICENSE No F-1148
1153 SE Cary Parkway, Suite 101
Cary, NC 27518
(919) 362-0225

ECOLOGICAL ENGINEERING

DOCUMENT NOT CONSIDERED FINAL UNLESS ALL SIGNATURES COMPLETED

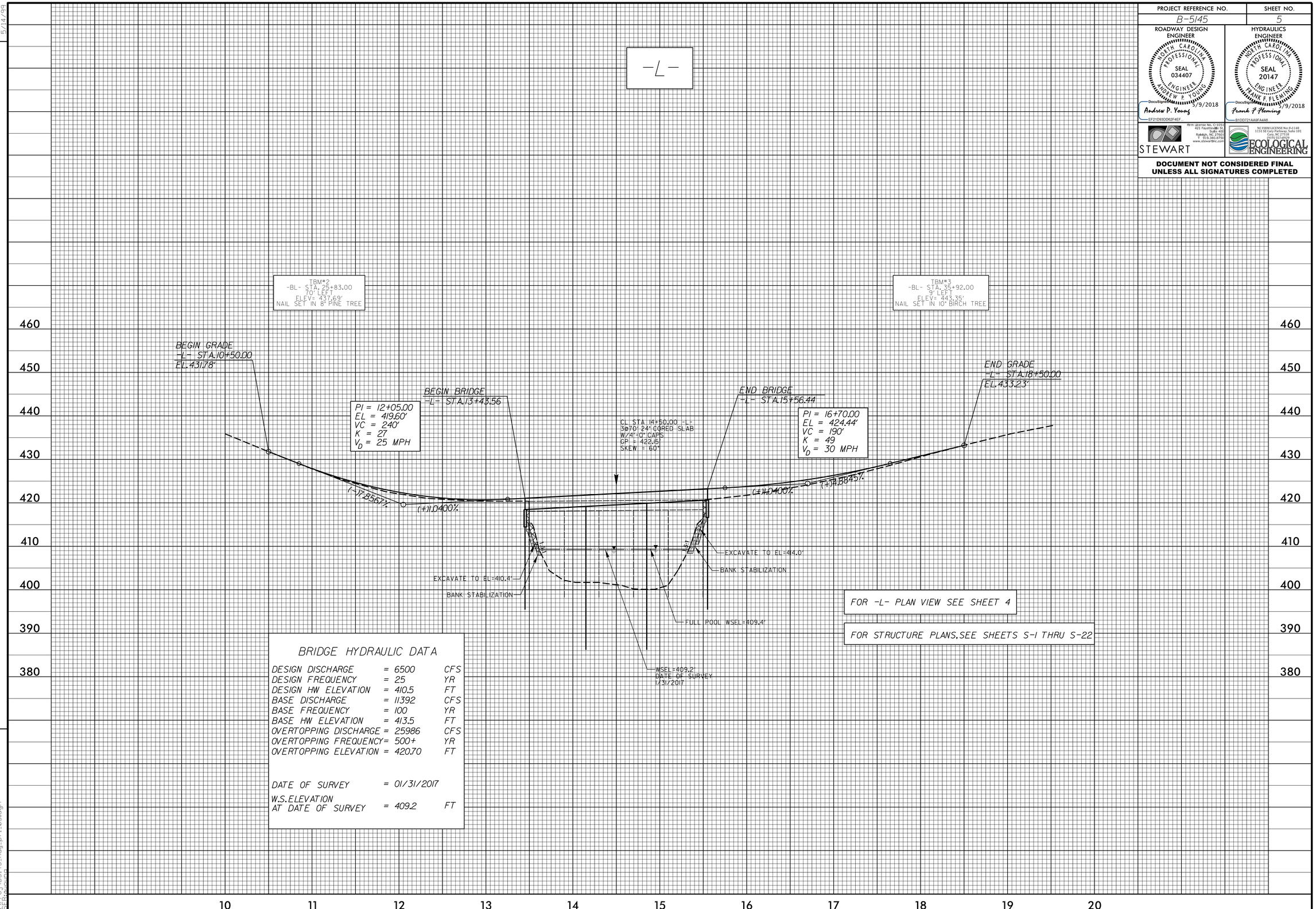

FOR -L- PLAN VIEW SEE SHEET 4

FOR STRUCTURE PLANS,SEE SHEETS S-1 THRU S-22

BRIDGE HYDRAULIC DATA

DESIGN DISCHARGE	= 6500	CFS
DESIGN FREQUENCY	= 25	YR
DESIGN HW ELEVATION	= 410.5	FT
BASE DISCHARGE	= 11392	CFS
BASE FREQUENCY	= 100	YR
BASE HW ELEVATION	= 413.5	FT
OVERTOPPING DISCHARGE	= 25986	CFS
OVERTOPPING FREQUENCY	= 500+	YR
OVERTOPPING ELEVATION	= 420.70	FT
DATE OF SURVEY	= 01/31/2017	
W.S.ELEVATION AT DATE OF SURVEY	= 409.2	FT

REVISIONS

5/14/99

5/1/2018
B5145_Rdy_pfl_05.dgn
USER:Rdwing

STATE OF NORTH CAROLINA
DIVISION OF HIGHWAYS

TRANSPORTATION MANAGEMENT PLAN

PERSON COUNTY

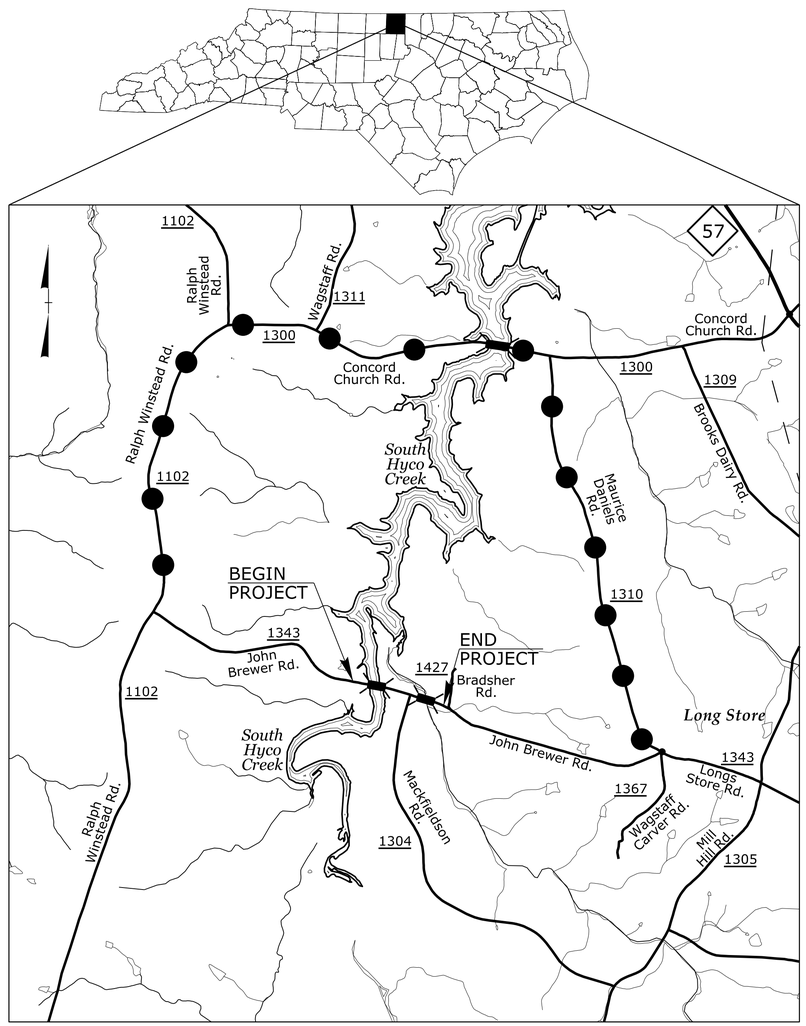

OFF-SITE DETOUR

WORK ZONE SAFETY & MOBILITY
"from the MOUNTAINS to the COAST"

N.C.D.O.T. WORK ZONE TRAFFIC CONTROL
1561 MAIL SERVICE CENTER (MSC) RALEIGH, NC 27699-1561
750 N. GREENFIELD PARKWAY, GARNER, NC 27529 (DELIVERY)
PHONE: (919) 773-2800 FAX: (919) 771-2745

ANDY YOUNG, PE — TRAFFIC CONTROL PROJECT ENGINEER

ELIZABETH PHELPS, EI — TRAFFIC CONTROL DESIGN ENGINEER

DIVISION OF HIGHWAYS · STATE OF NORTH CAROLINA · DEPARTMENT OF TRANSPORTATION · WORK ZONE TRAFFIC CONTROL

INDEX OF SHEETS

SHEET NO.	TITLE
TMP-1	TITLE SHEET, VICINITY MAP, AND INDEX OF SHEETS
TMP-1A	LIST OF APPLICABLE ROADWAY STANDARD DRAWINGS, AND LEGEND
TMP-1B	TRANSPORTATION OPERATIONS PLAN: (MANAGEMENT STRATEGIES, GENERAL NOTES, LOCAL NOTES, AND PHASING)
TMP-2	SPECIAL SIGN DESIGN
TMP-3	OFF-SITE DETOUR

DOCUMENT NOT CONSIDERED FINAL UNLESS ALL SIGNATURES COMPLETED

PLANS PREPARED BY:

STEWART
421 FAYETTEVILLE ST, STE 400
RALEIGH, NC 27601
T 919.380.8750
Firm License #: C-1051
www.stewartinc.com
PROJECT #:B16001.02

APPROVED: DocuSigned by: Andrew P. Young EF21D93DD62F4EF...

DATE: 5/9/2018

SEAL

NORTH CAROLINA PROFESSIONAL ENGINEER SEAL 034407 ANDREW P. YOUNG

SHEET NO.
TMP-1

B-5145 & B-5322

TIP PROJECT:

5/9/2018
...\TCP\B5145_B5322_TC_TCP-01.dgn
USER:ayoung

PROJ. REFERENCE NO.	SHEET NO.
B-5145/B-5322	TMP-1A

ROADWAY STANDARD DRAWINGS

THE FOLLOWING ROADWAY STANDARDS AS SHOWN IN "ROADWAY STANDARD DRAWINGS" - PROJECT SERVICES UNIT - N.C. DEPARTMENT OF TRANSPORTATION - RALEIGH, N.C., DATED JANUARY 2018 ARE APPLICABLE TO THIS PROJECT AND BY REFERENCE HEREBY ARE CONSIDERED A PART OF THESE PLANS:

STD. NO.	TITLE
1101.03	TEMPORARY ROAD CLOSURES
1101.11	TRAFFIC CONTROL DESIGN TABLES
1110.01	STATIONARY WORK ZONE SIGNS
1130.01	DRUM
1145.01	BARRICADES

LEGEND

GENERAL

- DIRECTION OF TRAFFIC FLOW
- DIRECTION OF PEDESTRIAN TRAFFIC FLOW
- EXIST. PVMT.
- NORTH ARROW
- PROPOSED PVMT.
- TEMP. SHORING (LOCATION PURPOSES ONLY)
- WORK AREA
- REMOVAL

SIGNALS

EXISTING PROPOSED TEMPORARY

PAVEMENT MARKINGS

- EXISTING LINES
- TEMPORARY LINES

TRAFFIC CONTROL DEVICES

- BARRICADE (TYPE III)
- CONE
- DRUM SKINNY DRUM TUBULAR MARKER
- TEMPORARY CRASH CUSHION
- FLASHING ARROW BOARD
- FLAGGER
- LAW ENFORCEMENT
- TRUCK MOUNTED ATTENUATOR (TMA)
- CHANGEABLE MESSAGE SIGN

TEMPORARY SIGNING

- PORTABLE SIGN
- STATIONARY SIGN
- STATIONARY OR PORTABLE SIGN

PAVEMENT MARKERS

- CRYSTAL/CRYSTAL
- CRYSTAL/RED
- YELLOW/YELLOW

PAVEMENT MARKING SYMBOLS

PAVEMENT MARKING SYMBOLS

STEWART
Firm License No. C-1051
421 Fayetteville St,
Suite 400
Raleigh, NC 27601
T 919.380.8750
www.stewartinc.com

APPROVED: DocuSigned by: Andrew P. Young EF21D93DD62F4EF...

DATE: 5/9/2018

SEAL

NORTH CAROLINA PROFESSIONAL SEAL 034407 ENGINEER ANDREW P. YOUNG

DOCUMENT NOT CONSIDERED FINAL UNLESS ALL SIGNATURES COMPLETED

DIVISION OF HIGHWAYS · STATE OF NORTH CAROLINA · DEPARTMENT OF TRANSPORTATION · WORK ZONE TRAFFIC CONTROL

ROADWAY STANDARD DRAWINGS & LEGEND

5/9/2018
...\TCP\B5145_B5322_TC_TCP-01A.dgn
USER:ayoung

PROJ. REFERENCE NO.	SHEET NO.
B-5145/B-5322	TMP-1B

MANAGEMENT STRATEGIES

DURING CONSTRUCTION OF PROPOSED STRUCTURE BRIDGE No. 50 OVER SOUTH HYCO CREEK AND BRIDGE No. 51 OVER RICHLAND CREEK, SR 1343 (JOHN BREWER RD.) WILL BE CLOSED TO THROUGH TRAFFIC. THROUGH TRAFFIC ON SR 1343 (JOHN BREWER RD.) WILL BE MAINTAINED USING AN OFFSITE DETOUR.

THE OFFSITE DETOUR WILL INCLUDE SR 1102, SR 1300, AND SR 1310. (SEE SHEET TMP-3).

ACCESS TO ALL RESIDENCES AND BUSINESSES WITHIN THE PROJECT LIMITS MUST BE MAINTAINED AT ALL TIMES.

LOCAL NOTES

1. NOTIFY THE ENGINEER AT LEAST 30 DAYS PRIOR TO ANY TRAFFIC PATTERN ALTERATION.
2. NOTIFY THE PERSON COUNTY SCHOOLS TRANSPORTATION DIRECTOR OF THE BRIDGE REMOVAL 30 DAYS PRIOR TO ROAD CLOSURE.
3. NOTIFY THE PERSON COUNTY EMERGENCY MANAGEMENT SERVICES DIRECTOR OF BRIDGE REMOVAL 30 DAYS PRIOR TO ROAD CLOSURE.

GENERAL NOTES

CHANGES MAY BE REQUIRED WHEN PHYSICAL DIMENSIONS IN THE DETAIL DRAWINGS, STANDARD DETAILS, AND ROADWAY DETAILS ARE NOT ATTAINABLE TO MEET FIELD CONDITIONS OR RESULT IN DUPLICATE OR UNDESIRED OVERLAPPING OF DEVICES. MODIFICATION MAY INCLUDE: MOVING, SUPPLEMENTING, COVERING, OR REMOVAL OF DEVICES AS DIRECTED BY THE ENGINEER.

THE FOLLOWING GENERAL NOTES APPLY AT ALL TIMES FOR THE DURATION OF THE CONSTRUCTION PROJECT EXCEPT WHEN OTHERWISE NOTED IN THE PLAN OR DIRECTED BY THE ENGINEER.

SIGNING

A) PROVIDE SIGNING AND DEVICES REQUIRED TO CLOSE THE ROAD ACCORDING TO THE ROADWAY STANDARD DRAWINGS AND TRAFFIC CONTROL PLANS.

PROVIDE SIGNING REQUIRED FOR THE OFF-SITE DETOUR ROUTE AS SHOWN IN THE TRAFFIC CONTROL PLANS.

B) COVER OR REMOVE ALL SIGNS AND DEVICES REQUIRED TO CLOSE THE ROAD WHEN ROAD CLOSURE IS NOT IN OPERATION.

COVER OR REMOVE ALL SIGNS REQUIRED FOR THE OFF-SITE DETOUR WHEN THE DETOUR IS NOT IN OPERATION.

C) ENSURE ALL NECESSARY SIGNING IS IN PLACE PRIOR TO ALTERING ANY TRAFFIC PATTERN.

PHASING

STEP 1:

PROVIDE AND MAINTAIN CHANGEABLE MESSAGE SIGNS AT EACH END OF SR 1343 (JOHN BREWER RD.) FOR FOURTEEN (14) CALENDAR DAYS PRIOR TO ROAD CLOSURE, AS SHOWN ON TMP-3

STEP 2:

USING RSD 1101.03, SHEET 1 OF 9, SHEETS TMP-2 AND TMP-3, INSTALL ROAD CLOSURE AND DETOUR SIGNS, PLACE TYPE III BARRICADES TO CLOSE SR 1343 (JOHN BREWER RD.) TO THROUGH TRAFFIC, AND DETOUR TRAFFIC OFFSITE. REMOVE CHANGEABLE MESSAGE SIGNS ONCE DETOUR IS IN PLACE.

STEP 3:

REMOVE THE EXISTING STRUCTURES.

STEP 4:

CONSTRUCT THE PROPOSED STRUCTURES AND ROADWAY.

STEP 5:

PLACE FINAL PAVEMENT MARKINGS ACCORDING TO THE PAVEMENT MARKING PLANS.

STEP 6:

OPEN SR 1343 (JOHN BREWER RD.) TO TRAFFIC AND REMOVE ALL WORK ZONE TRAFFIC CONTROL DEVICES.

STEWART
Firm License No. C-1051
421 Fayetteville St,
Suite 400
Raleigh, NC 27601
T 919.380.8750
www.stewartinc.com

APPROVED: DocuSigned by: Andrew D. Young EF21D93DD62F4EF...

DATE: 5/9/2018

SEAL

NORTH CAROLINA PROFESSIONAL SEAL 034407 ENGINEER ANDREW D. YOUNG

DOCUMENT NOT CONSIDERED FINAL UNLESS ALL SIGNATURES COMPLETED

DIVISION OF HIGHWAYS · STATE OF NORTH CAROLINA · DEPARTMENT OF TRANSPORTATION · WORK ZONE TRAFFIC CONTROL

TRANSPORTATION OPERATIONS PLAN

5/9/2018
...\TCP\B5145_B5322_TC_TCP-01B.dgn
USER:ayoung

PROJ. REFERENCE NO.	SHEET NO.
B-5145/B-5322	TMP-2

SIGN NUMBER: SP-1
TYPE: STATIONARY
QUANTITY: SEE PLANS

SIGN WIDTH: 3′-0″
HEIGHT: 1′-6″
TOTAL AREA: 4.5 Sq.Ft.

BORDER TYPE: INSET
RECESS: 0.38″
WIDTH: 0.63″
RADII: 1.5″

NO. Z BARS:
LENGTH:

BACKG COLOR: Fluorescent Orange
COPY COLOR: Black

SYMBOL	X	Y	WID	HT

MAT'L: 0.080″ (2.0 mm) ALUMINUM

DESIGN BY: Michael Burns, PE
CHECKED BY: Andy Young, PE
Dec 08, 2017
PROJECT ID: B-5145/B-5322
LOCATION: Franklin County
DIV: 5

USE NOTES: 1,2

1. Legend and border shall be direct applied black non-reflective sheeting.
2. Background shall be NC GRADE B fluorescent orange retroreflective sheeting.

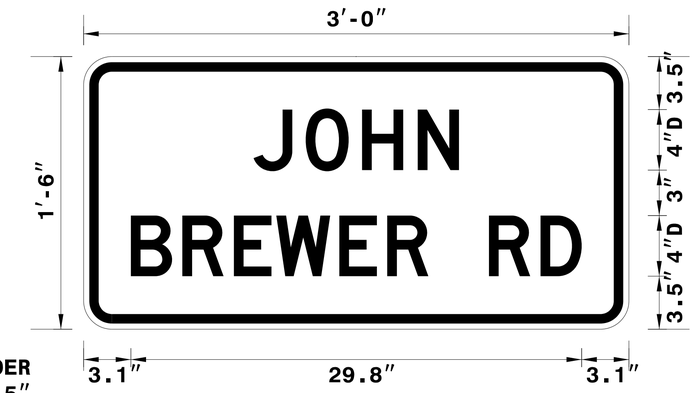

BORDER
R=1.5″
TH=0.63″
IN=0.38″

Panel Style: Traffic Control.ssi
M.U.T.C.D.: 2009 Edition

Spacing Factor is 1 unless specified otherwise

LETTER POSITIONS

Letter locations are panel edge to lower left corner

																											Series/Size Text Length
	J	O	H	N																							D 2000
	11.2	14.7	18.4	22.1																							13.6
	B	R	E	W	E	R		R	D																		D 2000
	3.1	6.5	9.9	12.7	16.9	20	22.8	26.8	30.2																		29.8

FILENAME: B5145_B5322_TC_TCP-02

NORTH CAROLINA D.O.T. SIGN DETAIL

5/9/2018
...\TCP\B5145_B5322_TC_TCP-02.dgn
USER:ayoung

STEWART
Firm License No. C-1051
421 Fayetteville St,
Suite 400
Raleigh, NC 27601
T 919.380.8750
www.stewartinc.com

APPROVED: DocuSigned by: Andrew P. Young EF21D93DD62F4EF...
DATE: 5/9/2018
SEAL

NORTH CAROLINA PROFESSIONAL SEAL 034407 ENGINEER ANDREW P. YOUNG

DOCUMENT NOT CONSIDERED FINAL UNLESS ALL SIGNATURES COMPLETED

DIVISION OF HIGHWAYS · STATE OF NORTH CAROLINA · DEPARTMENT OF TRANSPORTATION · WORK ZONE TRAFFIC CONTROL

SPECIAL SIGN DESIGN

PROJ. REFERENCE NO.	SHEET NO.
B-5145/B-5322	TMP-3

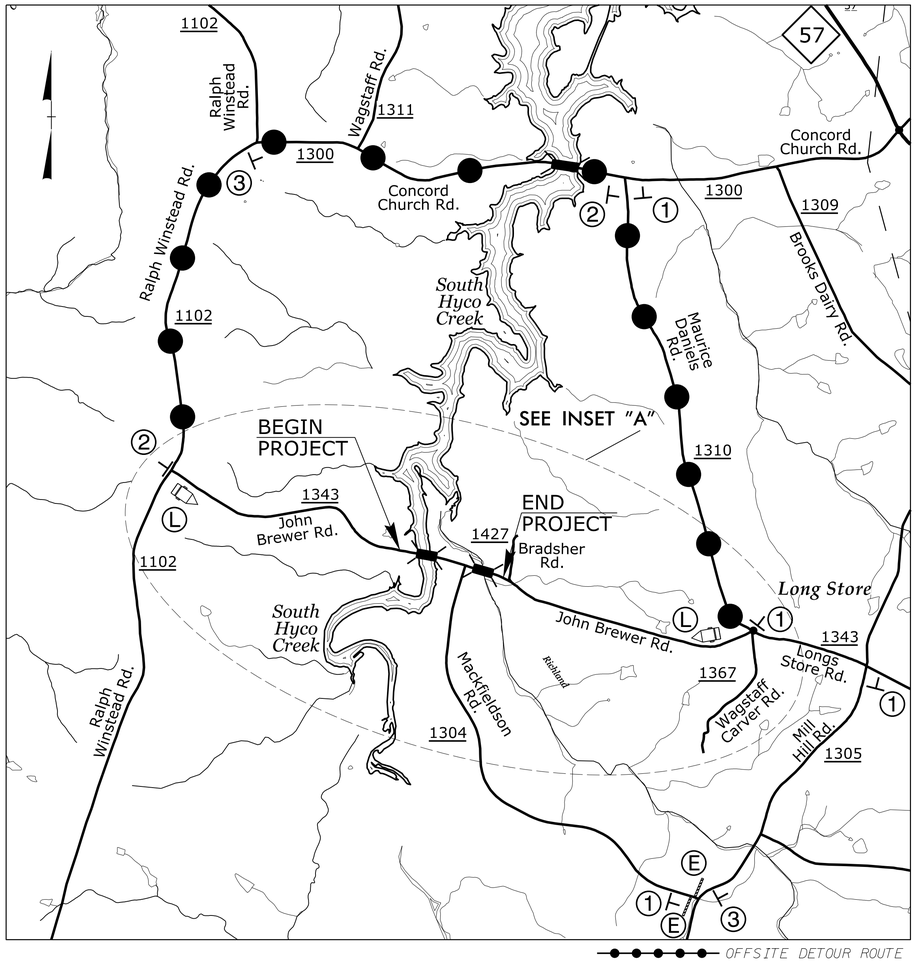

INSET A

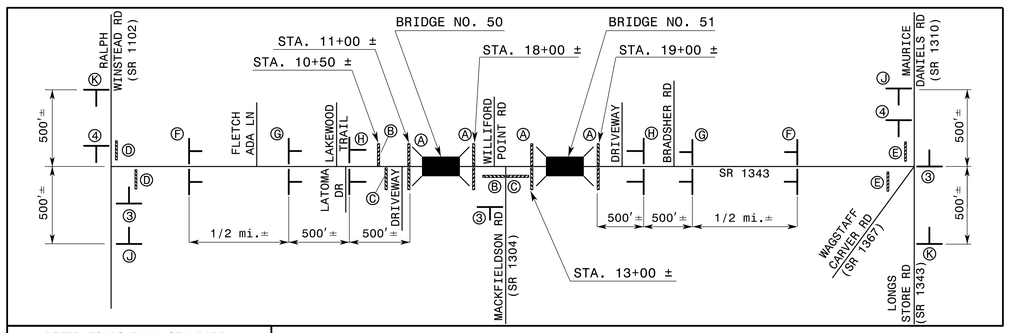

REFER TO ROADWAY STANDARD DRAWING 1101.03, SHEET 1 OF 9 FOR APPLICABLE NOTES.

Ⓐ

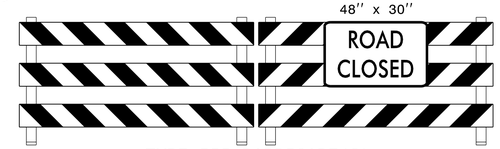

TYPE III BARRICADE(S)

Ⓑ

TYPE III BARRICADE

Ⓒ

TYPE III BARRICADE

Ⓓ

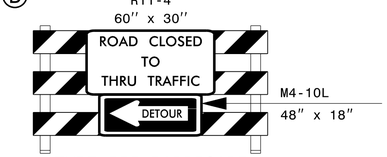

TYPE III BARRICADE

Ⓔ

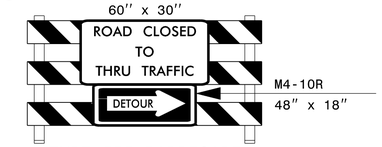

TYPE III BARRICADE

Ⓕ

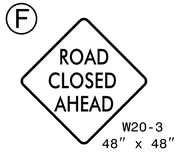

Ⓖ

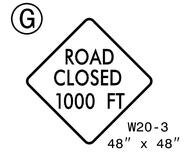

Ⓗ

Ⓙ

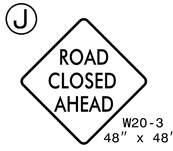

NEXT RIGHT SP-4R 42" X 12"

Ⓚ

NEXT LEFT SP-4L 42" X 12"

Ⓛ

MESSAGE NO. 1	MESSAGE NO. 2
JOHN	CLOSED
BREWER	STARTING
ROAD	XX-XX-XX

CHANGEABLE MESSAGE SIGN

①

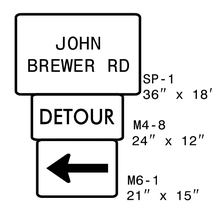

②

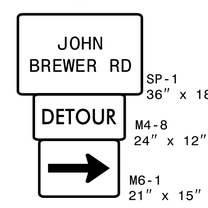

③

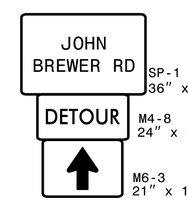

④

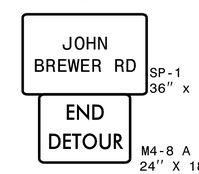

STEWART
Firm License No. C-1051
421 Fayetteville St,
Suite 400
Raleigh, NC 27601
T 919.380.8750
www.stewartinc.com

APPROVED: DocuSigned by: Andrew P. Young EF21D93DD82F4EF...

DATE: 5/9/2018

SEAL

NORTH CAROLINA PROFESSIONAL SEAL 034407 ENGINEER ANDREW P. YOUNG

DOCUMENT NOT CONSIDERED FINAL UNLESS ALL SIGNATURES COMPLETED

DIVISION OF HIGHWAYS · STATE OF NORTH CAROLINA · DEPARTMENT OF TRANSPORTATION · WORK ZONE TRAFFIC CONTROL

OFF-SITE DETOUR

5/9/2018
...\TCP\B5145_B5322_TC_TCP-03.dgn
USER:ayoung

T.I.P.: B-5145

CONTRACT:

TIP NO.	SHEET NO.
B-5145	PMP-1

APPROVED: DocuSigned by: Andrew P. Young EF21D93DD62F4EF...

DATE: 5/9/2018

SEAL:

NORTH CAROLINA PROFESSIONAL SEAL 034407 ENGINEER ANDREW P. YOUNG

DOCUMENT NOT CONSIDERED FINAL UNLESS ALL SIGNATURES COMPLETED

STATE OF NORTH CAROLINA
DEPARTMENT OF TRANSPORTATION

PAVEMENT MARKING PLAN

PERSON COUNTY

LOCATION: BRIDGE NO. 50 OVER SOUTH HYCO CREEK ON SR 1343 (JOHN BREWER RD.)

ROADWAY STANDARD DRAWING

THE FOLLOWING ROADWAY STANDARDS AS APPEAR IN "ROADWAY STANDARD DRAWINGS" - PROJECT SERVICES UNIT - N.C. DEPARTMENT OF TRANSPORTATION - RALEIGH, N.C., DATED JANUARY 2018 ARE APPLICABLE TO THIS PROJECT AND BY REFERENCE HEREBY ARE CONSIDERED A PART OF THESE PLANS:

STD. NO.	TITLE
1205.01	PAVEMENT MARKINGS - LINE TYPES AND OFFSETS
1205.02	PAVEMENT MARKINGS - TWO-LANE AND MULTILANE ROADWAYS
1205.12	PAVEMENT MARKINGS - BRIDGES
1250.01	RAISED PAVEMENT MARKERS - INSTALLATION SPACING
1251.01	RAISED PAVEMENT MARKERS - PERMANENT AND TEMPORARY
1261.01	GUARDRAIL AND BARRIER DELINEATORS - INSTALLATION SPACING
1261.02	GUARDRAIL AND BARRIER DELINEATORS - TYPES AND MOUNTING
1262.01	GUARDRAIL END DELINEATION

PAVEMENT MARKING SCHEDULE

SYMBOL	DESCRIPTION
PA	PAINT WHITE EDGELINE (4") X2
PI	PAINT YELLOW DOUBLE CENTER (4") X2
MA	YELLOW & YELLOW, PERMANENT RAISED PAVEMENT MARKERS

GENERAL NOTES

THE FOLLOWING GENERAL NOTES APPLY AT ALL TIMES FOR THE DURATION OF THE CONSTRUCTION PROJECT, EXCEPT WHEN OTHERWISE NOTED IN THE PLAN, OR DIRECTED BY THE ENGINEER.

A) INSTALL PAVEMENT MARKINGS AND PAVEMENT MARKERS ON THE FINAL SURFACE AS FOLLOWS:

ROAD NAME	MARKING	MARKER
JOHN BREWER RD.	PAINT	RAISED

B) TIE PROPOSED PAVEMENT MARKING LINES TO EXISTING PAVEMENT MARKING LINES.

C) REMOVE/REPLACE ANY CONFLICTING/DAMAGED PAVEMENT MARKINGS.

CONTINUE PROPOSED PAVEMENT MARKINGS FROM END OF TIP PROJECT B-5145 AND TIE TO PROPOSED PAVEMENT MARKINGS AT BEGINNING OF TIP PROJECT B-5322.

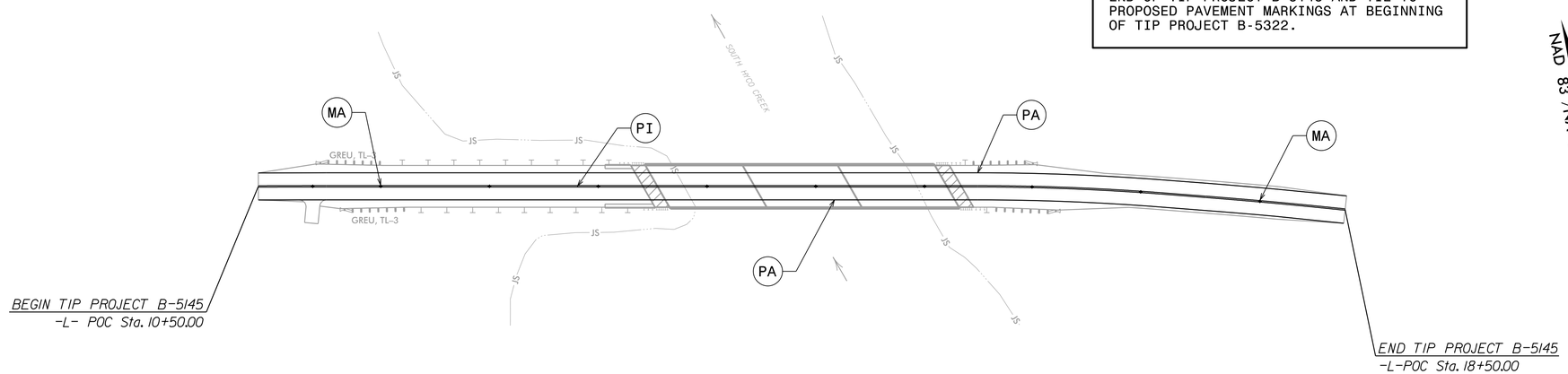

RAISED PAVEMENT MARKERS

TYP. SPACING	BEGIN STA.	END STA.
80'	10+50 +/-	18+50 +/-

PLAN PREPARED BY: STEWART

ANDY YOUNG, PE	PROJECT ENGINEER
ELIZABETH PHELPS, EI	PROJECT DESIGN ENGINEER

STEWART
Firm License No. C-1051
421 Fayetteville St.
Suite 400
Raleigh, NC 27601
T 919.380.8750
www.stewartinc.com

5/9/2018
...\TCP\B5145_TC_PMP_01.dgn
USER:ajoung

PROJECT: B-5145

TIP P

STATE	STATE PROJECT REFERENCE NO.	SHEET NO.	TOTAL SHEETS
N.C.	B-5145	EC-1	

STATE PROJ. NO.	F. A. PROJ. NO.	DESCRIPTION

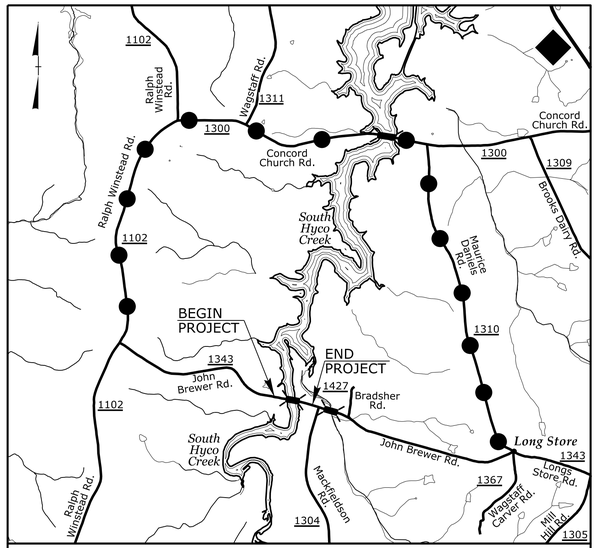

VICINITY MAP

OFF-SITE DETOUR

See Sheet 1A For Index of Sheets
See Sheet 1B For Conventional Symbols

STATE OF NORTH CAROLINA

DIVISION OF HIGHWAYS

PLAN FOR PROPOSED

HIGHWAY EROSION CONTROL

PERSON COUNTY

LOCATION: BRIDGE NO. 50 OVER SOUTH HYCO CREEK ON SR 1343 (JOHN BREWER RD.)

TYPE OF WORK: GRADING, DRAINAGE, PAVING, AND STRUCTURE

NAD 83/NSRS 2007

4

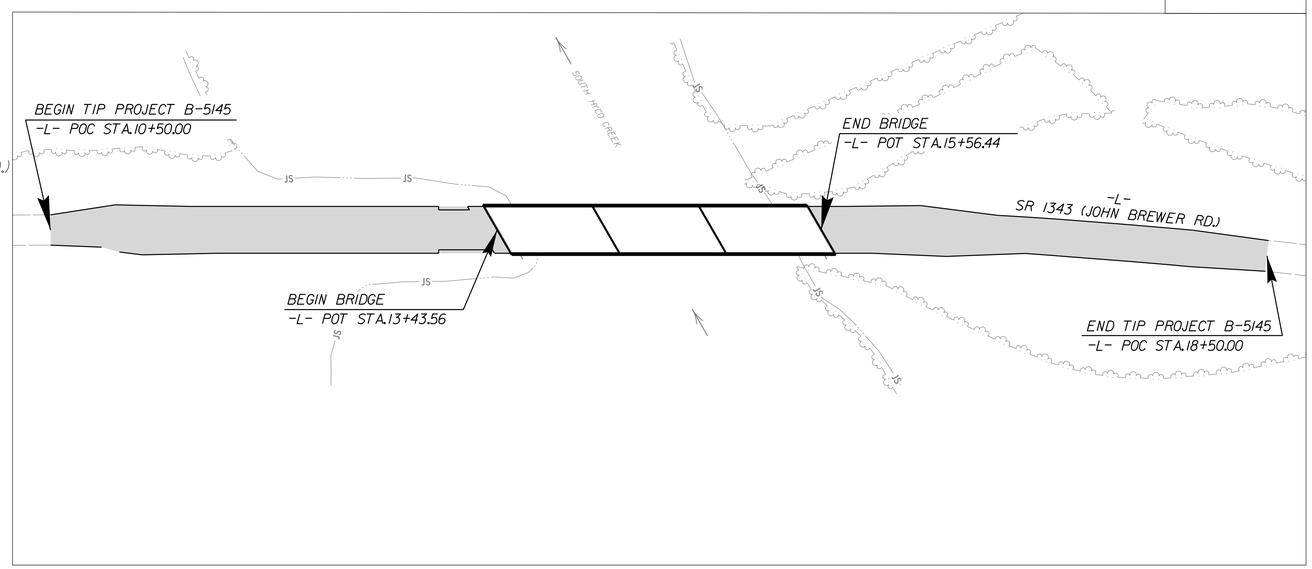

EROSION AND SEDIMENT CONTROL MEASURES

Std. #	Description	Symbol
1630.03	Temporary Silt Ditch	TSD
1630.05	Temporary Diversion	TD
1605.01	Temporary Silt Fence	
1606.01	Special Sediment Control Fence	
1622.01	Temporary Berms and Slope Drains	
1630.02	Silt Basin Type B	
1633.01	Temporary Rock Silt Check Type-A	
	Temporary Rock Silt Check Type-A with Matting and Polyacrylamide (PAM)	
1633.02	Temporary Rock Silt Check Type-B	
	Wattle/ Coir Fiber Wattle	EW CFW
	Wattle/ Coir Fiber Wattle with Polyacrylamide (PAM)	
1634.01	Temporary Rock Sediment Dam Type-A	
1634.02	Temporary Rock Sediment Dam Type-B	
1635.01	Rock Pipe Inlet Sediment Trap Type-A	
1635.02	Rock Pipe Inlet Sediment Trap Type-B	
1630.04	Stilling Basin	
1630.06	Special Stilling Basin	
	Rock Inlet Sediment Trap:	
1632.01	Type A	A
1632.02	Type B	B
1632.03	Type C	C
	Skimmer Basin	
	Tiered Skimmer Basin	
	Infiltration Basin	

THIS PROJECT CONTAINS EROSION CONTROL PLANS FOR CLEARING AND GRUBBING PHASE OF CONSTRUCTION.

GRAPHIC SCALE

25 0 50
PLANS

25 0 50
PROFILE (HORIZONTAL)

5 0 10
PROFILE (VERTICAL)

THESE EROSION AND SEDIMENT CONTROL PLANS COMPLY WITH THE REGULATIONS SET FORTH BY THE NCG-010000 GENERAL CONSTRUCTION PERMIT EFFECTIVE AUGUST 1, 2016 AND ISSUED BY THE NORTH CAROLINA DEPARTMENT OF ENVIRONMENT AND NATURAL RESOURCES DIVISION OF WATER RESOURCES.

Prepared in the Office of:

ECOLOGICAL ENGINEERING

NC FIRM LICENSE No: F-1148
1151 SE Cary Parkway
Suite 101
Cary, NC 27518
(919) 557-0929

Designed by:

BRANDON BARHAM, PE — NAME

3368 — LEVEL III CERTIFICATION NO.

Reviewed in the Office of:

ROADSIDE ENVIRONMENTAL UNIT

1 South Wilmington St.
Raleigh, NC 27611

2018 STANDARD SPECIFICATIONS

Reviewed by:

DONALD PEARSON

Roadway Standard Drawings

The following roadway english standards as appear in "Roadway Standard Drawings"– Roadway Design Unit – N. C. Department of Transportation – Raleigh, N. C., dated January 2018 and the latest revison thereto are applicable to this project and by reference hereby are considered a part of these plans.

1604.01	Railroad Erosion Control Detail	1632.01	Rock Inlet Sediment Trap Type A
1605.01	Temporary Silt Fence	1632.02	Rock Inlet Sediment Trap Type B
1606.01	Special Sediment Control Fence	1632.03	Rock Inlet Sediment Trap Type C
1607.01	Gravel Construction Entrance	1633.01	Temporary Rock Silt Check Type A
1622.01	Temporary Berms and Slope Drains	1633.02	Temporary Rock Silt Check Type B
1630.01	Riser Basin	1634.01	Temporary Rock Sediment Dam Type A
1630.02	Silt Basin Type B	1634.02	Temporary Rock Sediment Dam Type B
1630.03	Temporary Silt Ditch	1635.01	Rock Pipe Inlet Sediment Trap Type A
1630.04	Stilling Basin	1635.02	Rock Pipe Inlet Sediment Trap Type B
1630.05	Temporary Diversion	1640.01	Coir Fiber Baffle
1630.06	Special Stilling Basin	1645.01	Temporary Stream Crossing
1631.01	Matting Installation		

5/1/2018
USER:bbarham
B5145_REU_tsh.dgn

PROJECT REFERENCE NO.	SHEET NO.
B-5145	EC-02
ROADWAY DESIGN ENGINEER	HYDRAULICS ENGINEER

DIVISION OF HIGHWAYS
STATE OF NORTH CAROLINA

SOIL STABILIZATION TIMEFRAMES

SITE DESCRIPTION	STABILIZATION TIME	TIMEFRAME EXCEPTIONS
PERIMETER DIKES, SWALES, DITCHES AND SLOPES	7 DAYS	NONE
HIGH QUALITY WATER (HQW) ZONES	7 DAYS	NONE
SLOPES STEEPER THAN 3:1	7 DAYS	IF SLOPES ARE 10' OR LESS IN LENGTH AND ARE NOT STEEPER THAN 2:1, 14 DAYS ARE ALLOWED.
SLOPES 3:1 OR FLATTER	14 DAYS	7 DAYS FOR SLOPES GREATER THAN 50' IN LENGTH.
ALL OTHER AREAS WITH SLOPES FLATTER THAN 4:1	14 DAYS	NONE, EXCEPT FOR PERIMETERS AND HQW ZONES.

PROJECT REFERENCE NO.	SHEET NO.
B-5145	EC-03
R/W SHEET NO.	
ROADWAY DESIGN ENGINEER	HYDRAULICS ENGINEER

TEMPORARY ROCK SILT CHECK TYPE 'A' WITH EXCELSIOR MATTING AND POLYACRYLAMIDE (PAM)

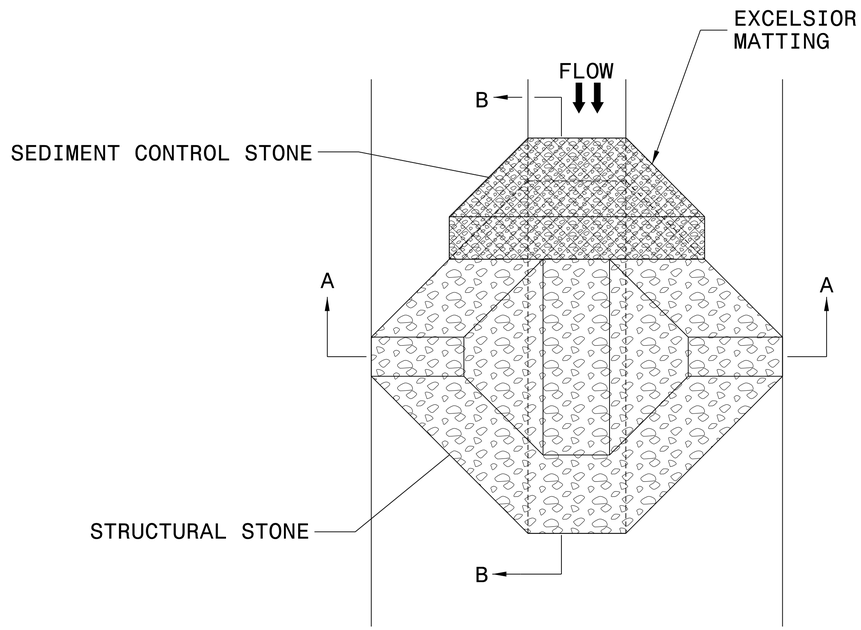

PLAN

NOTES:

INSTALL TEMPORARY ROCK SILT CHECK TYPE A IN ACCORDANCE WITH ROADWAY STANDARD DRAWING NO. 1633.01.

USE EXCELSIOR FOR MATTING MATERIAL AND ANCHOR MATTING SECTION AT TOP AND BOTTOM WITH CLASS B STONE.

PRIOR TO POLYACRYLAMIDE (PAM) APPLICATION, OBTAIN A SOIL SAMPLE FROM PROJECT LOCATION, AND FROM OFFSITE MATERIAL, AND ANALYZE FOR APPROPRIATE PAM FLOCCULANT TO BE APPLIED TO EACH ROCK SILT CHECK.

INITIALLY APPLY 4 OUNCES OF POLYACRYLAMIDE (PAM) TO TOP OF MATTING SECTION AND AFTER EVERY RAINFALL EVENT THAT EQUALS OR EXCEEDS 0.50 INCHES.

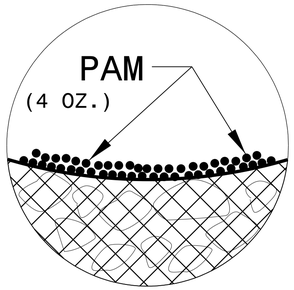

INSET A

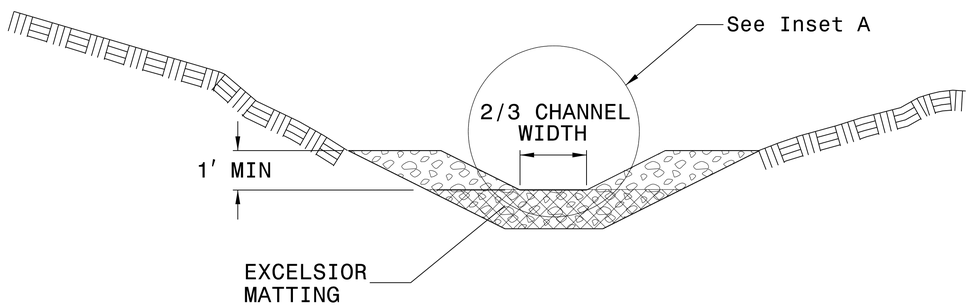

SECTION A-A

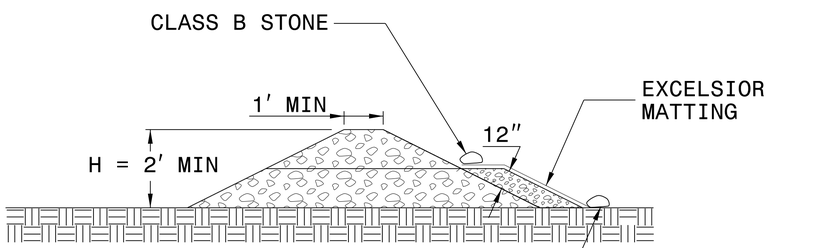

SECTION B-B

NOT TO SCALE

PROJECT REFERENCE NO.	SHEET NO.
B-5145	EC-04/CONST.04
ROADWAY DESIGN ENGINEER	HYDRAULICS ENGINEER

STEWART — Firm License No. C-1051, 421 Fayetteville St., Suite 400, Raleigh, NC 27601, T 919.380.8750, www.stewartinc.com

ECOLOGICAL ENGINEERING — NC FIRM LICENSE No F-1148, 1155 SE Cary Parkway, Suite 101, Cary, NC 27518, (919) 557-0029

REVISIONS 5/14/99

-L-

PI Sta 10+67.93	PI Sta 16+46.48	PI Sta 18+30.12
Δ = 0° 19' 07.0" (RT)	Δ = 4° 24' 43.0" (RT)	Δ = 2° 37' 27.1" (RT)
D = 0° 29' 48.0"	D = 3° 16' 26.6"	D = 1° 34' 48.9"
L = 641.5'	L = 1347.6'	L = 1660.6'
T = 320.7'	T = 674.1'	T = 830.5'
R = 11,535.75'	R = 1,750.00'	R = 3,625.73'
	Runoff = 80'	Runoff = 80'
	S_e = 4%	S_e = 4%

CLEARING AND GRUBBING
EROSION CONTROL FOR
CONSTRUCTION SHEET 4

NAD 83/NSRS 2007

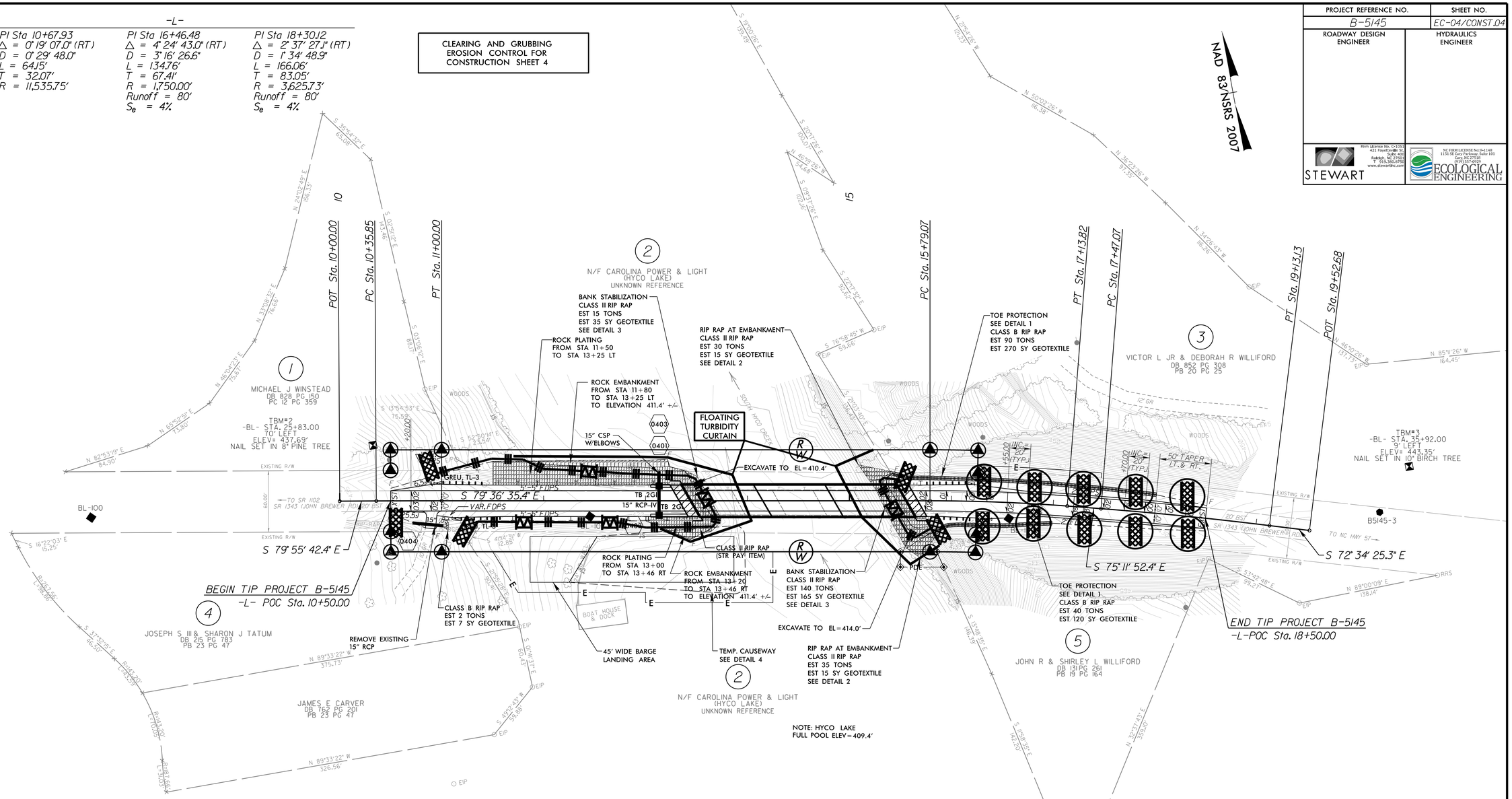

PAVEMENT-BRIDGE RELATIONSHIP SKETCH

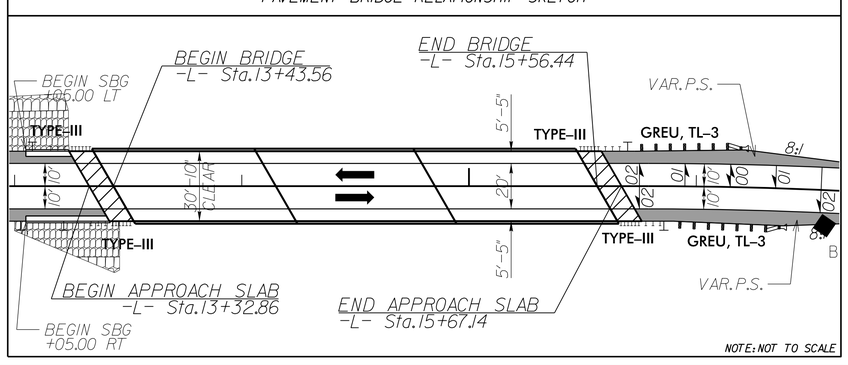

DETAIL 1
TOE PROTECTION
(Not to Scale)

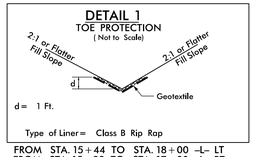

FROM STA. 15+44 TO STA. 18+00 -L- LT
FROM STA. 15+88 TO STA 17+00 -L- RT

DETAIL 2
RIP RAP AT EMBANKMENT
(Not to Scale)

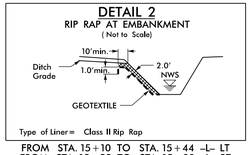

FROM STA. 15+10 TO STA. 15+44 -L- LT
FROM STA. 15+55 TO STA. 15+88 -L- RT

DETAIL 3
BANK STABILIZATION
(Not to Scale)

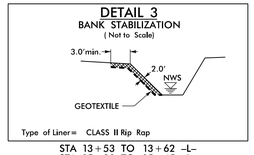

STA 13+53 TO 13+62 -L-
STA 15+30 TO 15+45 -L-

DETAIL 4
TEMPORARY CAUSEWAY
(NOT TO SCALE)

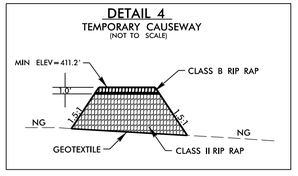

ALL DRIVEWAY RADII ARE 5' UNLESS OTHERWISE NOTED

FOR -L- PROFILE, SEE SHEET 5

FOR STRUCTURE PLANS, SEE SHEETS S-1 THRU S-22

5/1/2018
B5145_GREU_psh_04_C&G.dgn

PROJECT REFERENCE NO.	SHEET NO.
B-5145	EC-05/CONST.04
ROADWAY DESIGN ENGINEER	HYDRAULICS ENGINEER

STEWART — Firm License No. C-1051, 421 Fayetteville St., Suite 400, Raleigh, NC 27601, T 919.380.8750, www.stewartinc.com

ECOLOGICAL ENGINEERING — NC FIRM LICENSE No F-1148, 1155 SE Cary Parkway, Suite 101, Cary, NC 27518, (919) 557-0029

REVISIONS

5/14/99

-L-

PI Sta 10+67.93	PI Sta 16+46.48	PI Sta 18+30.12
Δ = 0° 19' 07.0" (RT)	Δ = 4° 24' 43.0" (RT)	Δ = 2° 37' 27.1" (RT)
D = 0° 29' 48.0"	D = 3° 16' 26.6"	D = 1° 34' 48.9"
L = 641.5'	L = 134.76'	L = 166.06'
T = 321.07'	T = 67.41'	T = 83.05'
R = 11,535.75'	R = 1,750.00'	R = 3,625.73'
	Runoff = 80'	Runoff = 80'
	S_e = 4%	S_e = 4%

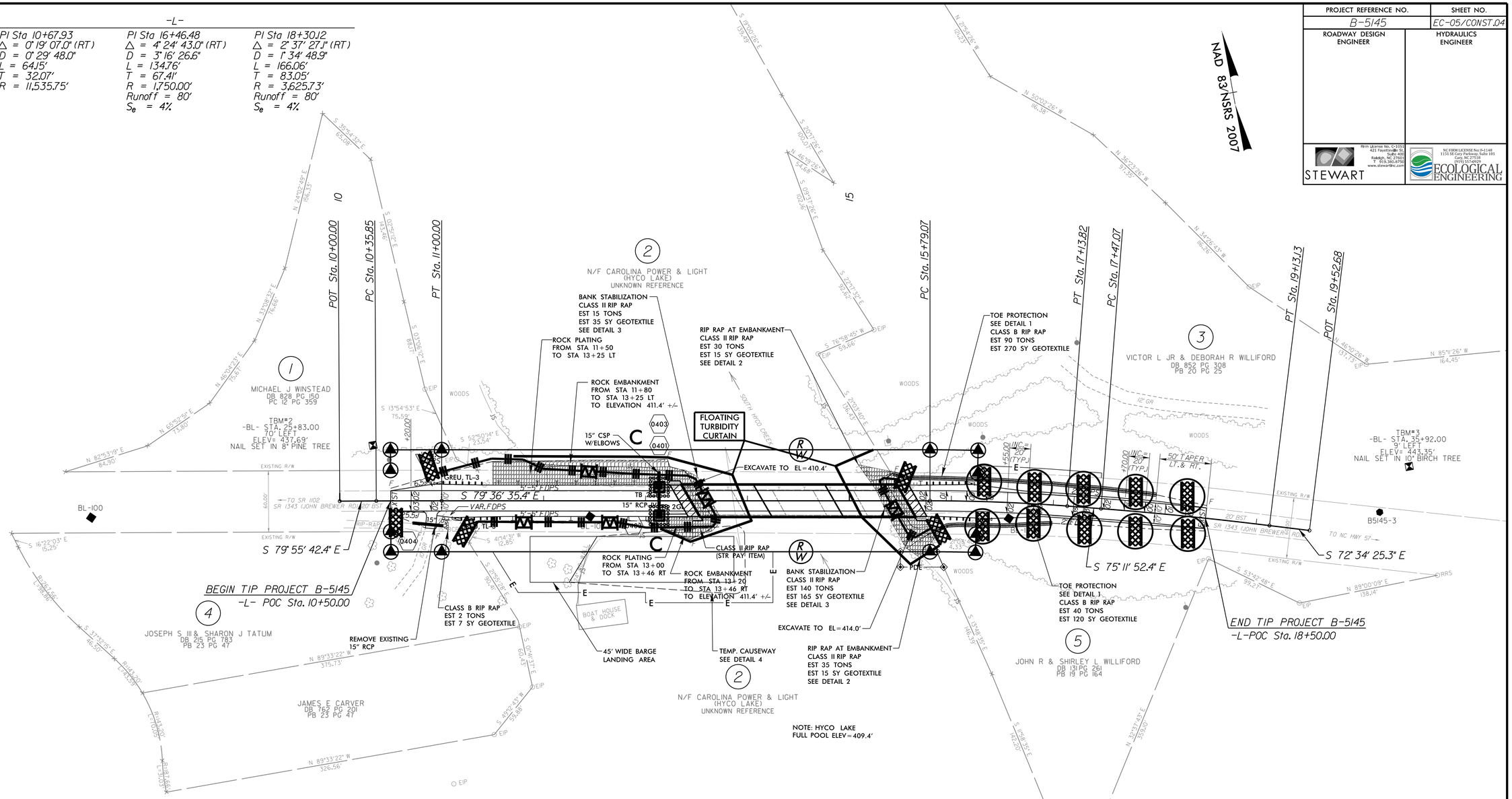

PAVEMENT-BRIDGE RELATIONSHIP SKETCH

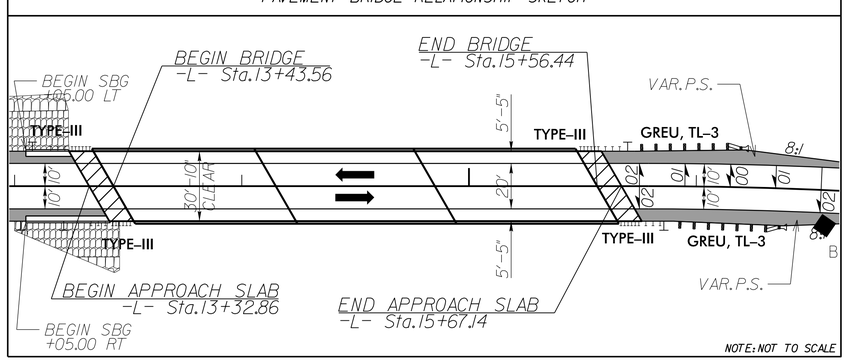

DETAIL 1
TOE PROTECTION
(Not to Scale)

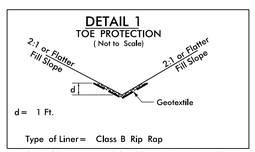

FROM STA. 15+44 TO STA. 18+00 -L- LT
FROM STA. 15+88 TO STA 17+00 -L- RT

DETAIL 2
RIP RAP AT EMBANKMENT
(Not to Scale)

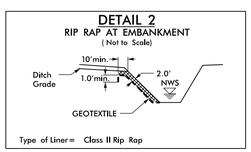

FROM STA. 15+10 TO STA. 15+44 -L- LT
FROM STA. 15+55 TO STA. 15+88 -L- RT

DETAIL 3
BANK STABILIZATION
(Not to Scale)

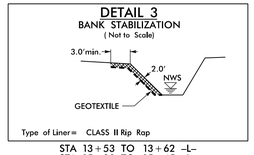

STA 13+53 TO 13+62 -L-
STA 15+30 TO 15+45 -L-

DETAIL 4
TEMPORARY CAUSEWAY
(NOT TO SCALE)

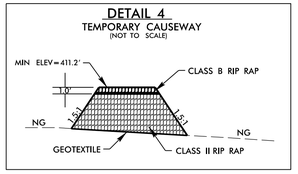

ALL DRIVEWAY RADII ARE 5' UNLESS OTHERWISE NOTED

FOR -L- PROFILE, SEE SHEET 5

FOR STRUCTURE PLANS, SEE SHEETS S-1 THRU S-22

5/1/2018
B5145_GREU_psh_04_FINAL.dgn
USER: rbeal

PROJECT REFERENCE NO.	SHEET NO.
B-5145	X-1A

STATE OF NORTH CAROLINA
DIVISION OF HIGHWAYS

CROSS-SECTION SUMMARY

NOTE: EMBANKMENT COLUMN DOES NOT INCLUDE BACKFILL FOR UNDERCUT

Station L	Uncl. Exc. (cu. yd.)	Embt (cu. yd.)
10+50.00	0	0
11+00.00	42	7
11+50.00	36	38
12+00.00	24	69
12+50.00	25	67
13+00.00	31	68
13+44.00	20	190

Station L	Uncl. Exc. (cu. yd.)	Embt (cu. yd.)
15+56.00	0	0
16+00.00	0	197
16+50.00	0	88
17+00.00	0	48
17+50.00	7	17
18+00.00	22	5
18+50.00	34	1

Approximate quantities only. Unclassified excavation, borrow excavation, fine grading, clearing and grubbing, and removal of existing pavement will be paid for at the lump sum price for "Grading".

REVISIONS

8/17/99

5/10/2018
ISF Rawlins
B5145_rdy_xpl_x1a.dgn

0 5 10	PROJ. REFERENCE NO.	SHEET NO.
	B-5145	X-1

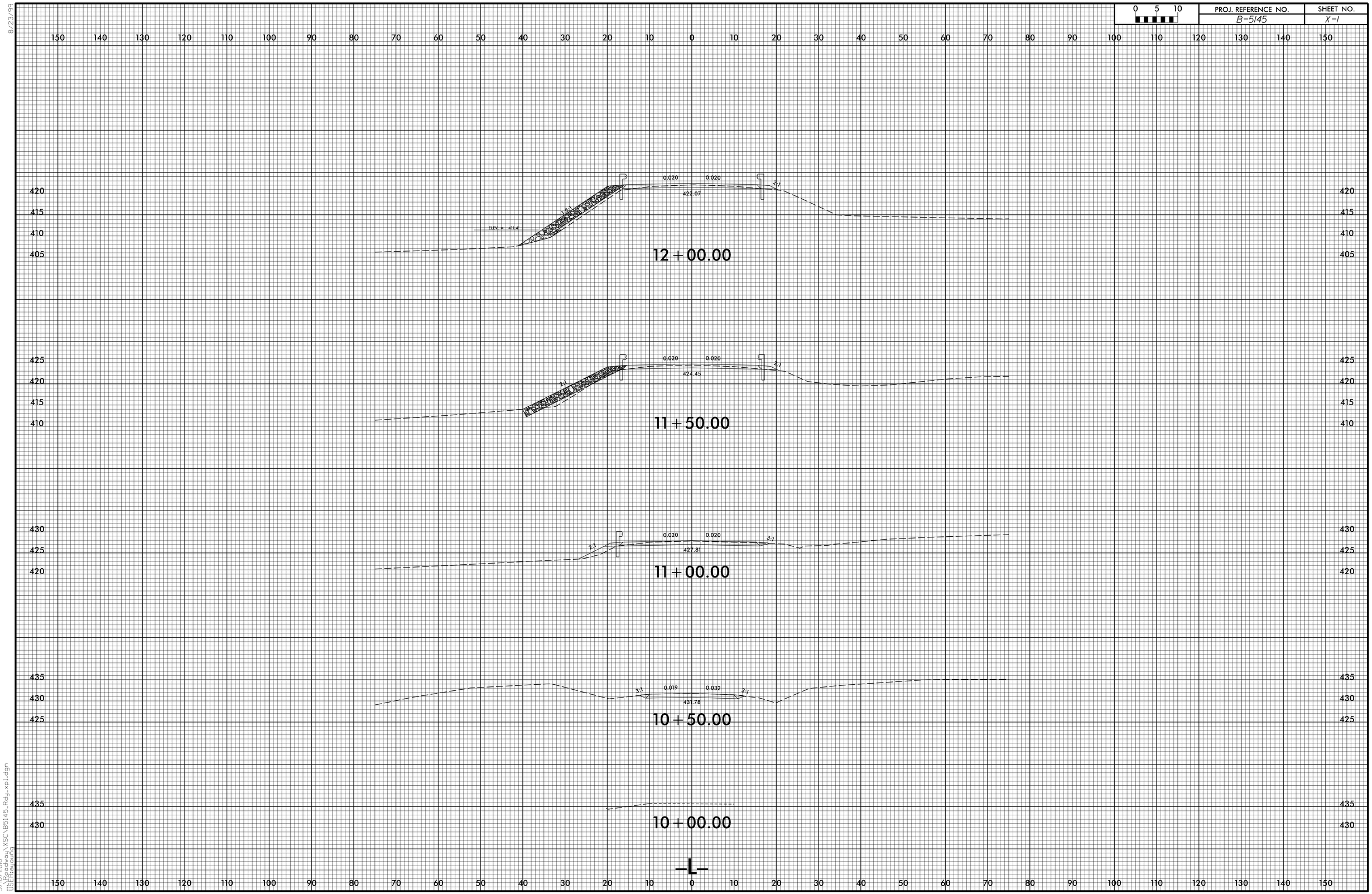

8/23/99

5/10/2018
\\Roadway\XSC\B5145_Rdy_xpl.dgn
USER:raybourg

0 5 10	PROJ. REFERENCE NO.	SHEET NO.
	B-5145	X-2

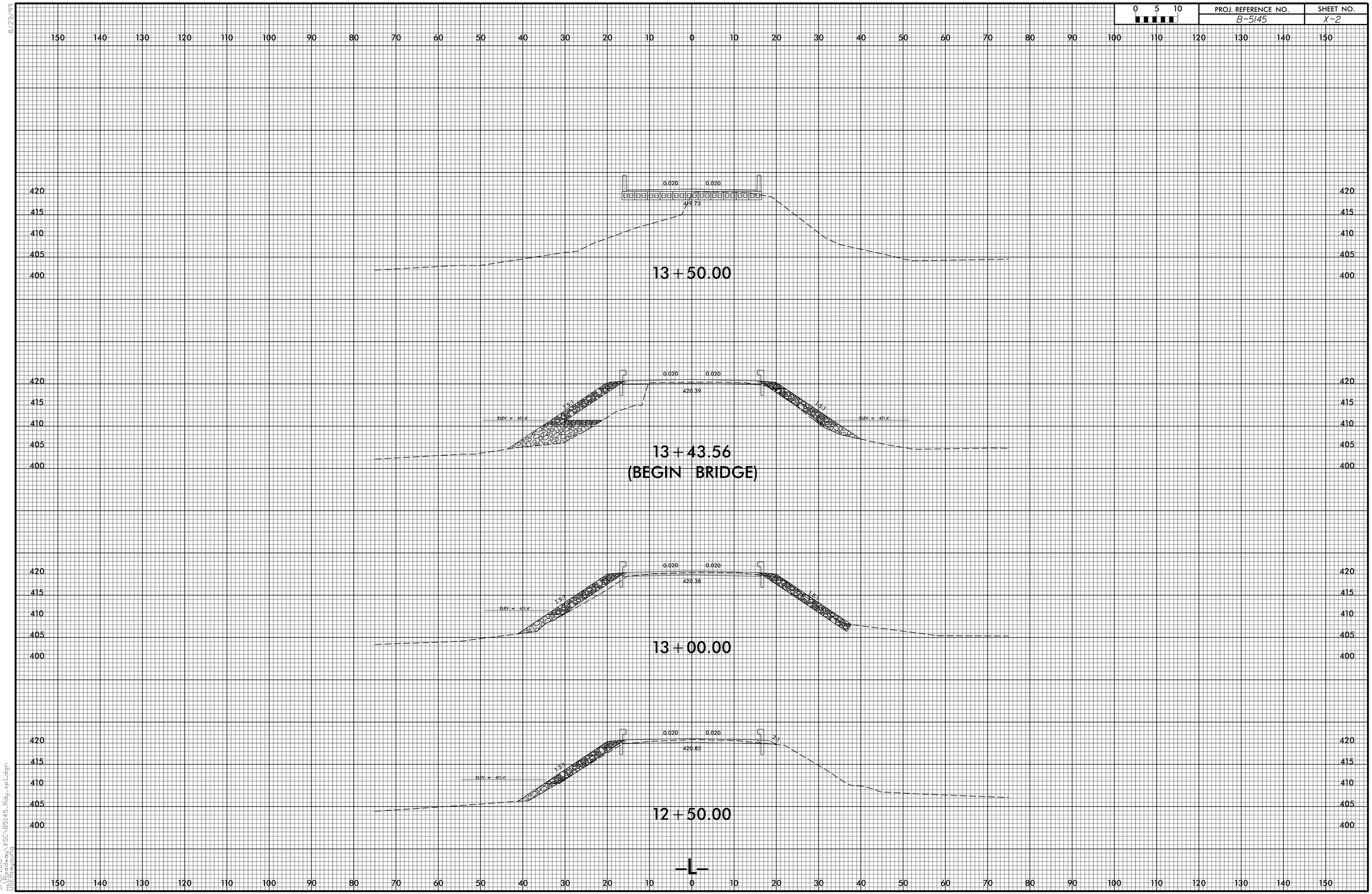

8/23/99

5/10/2018
...\Roadway\XSC\B5145_Rdy_xpl.dgn
USER:raybourg

0 5 10	PROJ. REFERENCE NO.	SHEET NO.
	B-5145	X-3

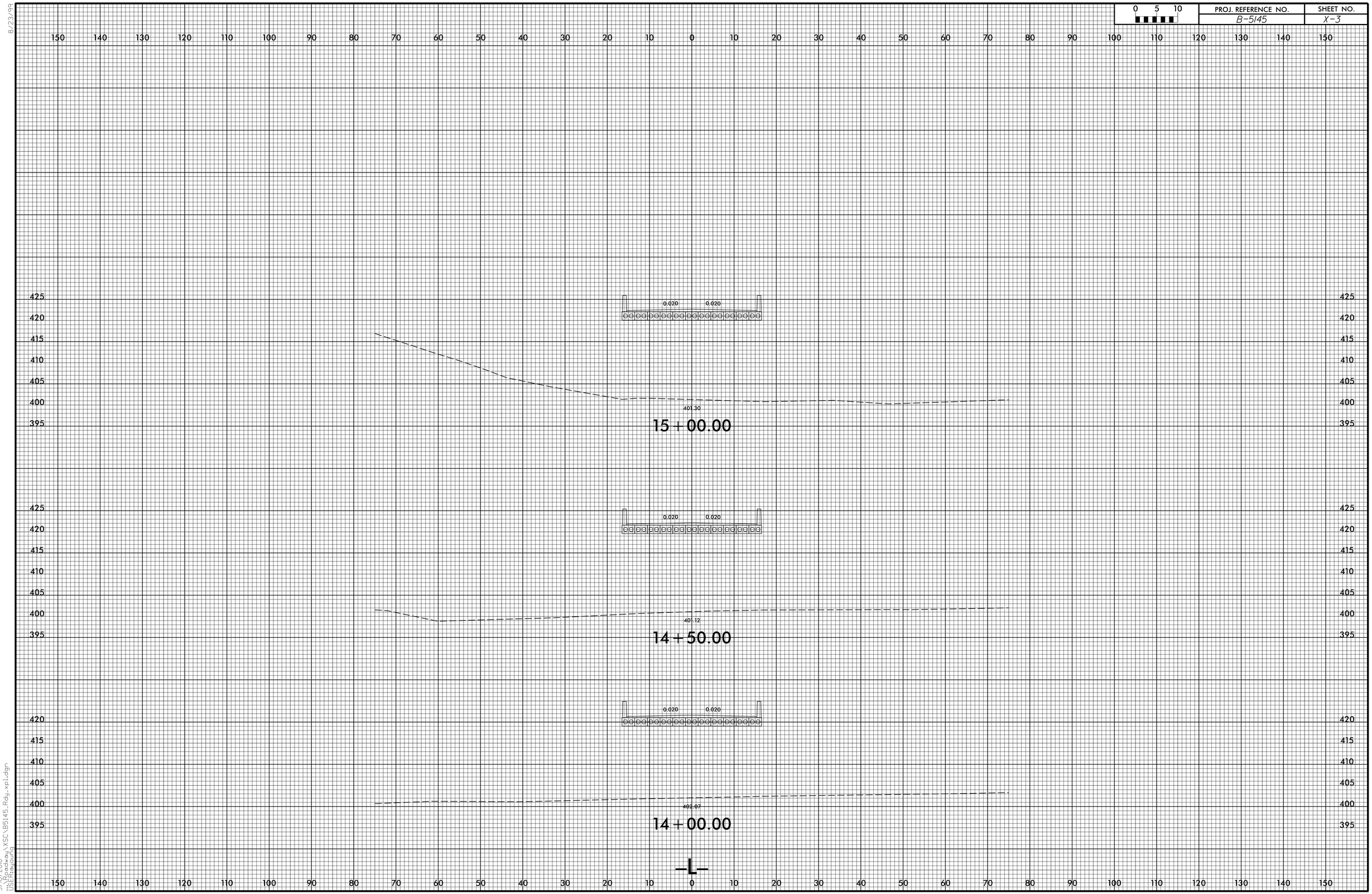

8/23/99

5/10/2018
\\Roadway\XSC\B5145_Rdy_xpl.dgn
USER:raqourig

0 5 10	PROJ. REFERENCE NO.	SHEET NO.
	B-5145	X-4

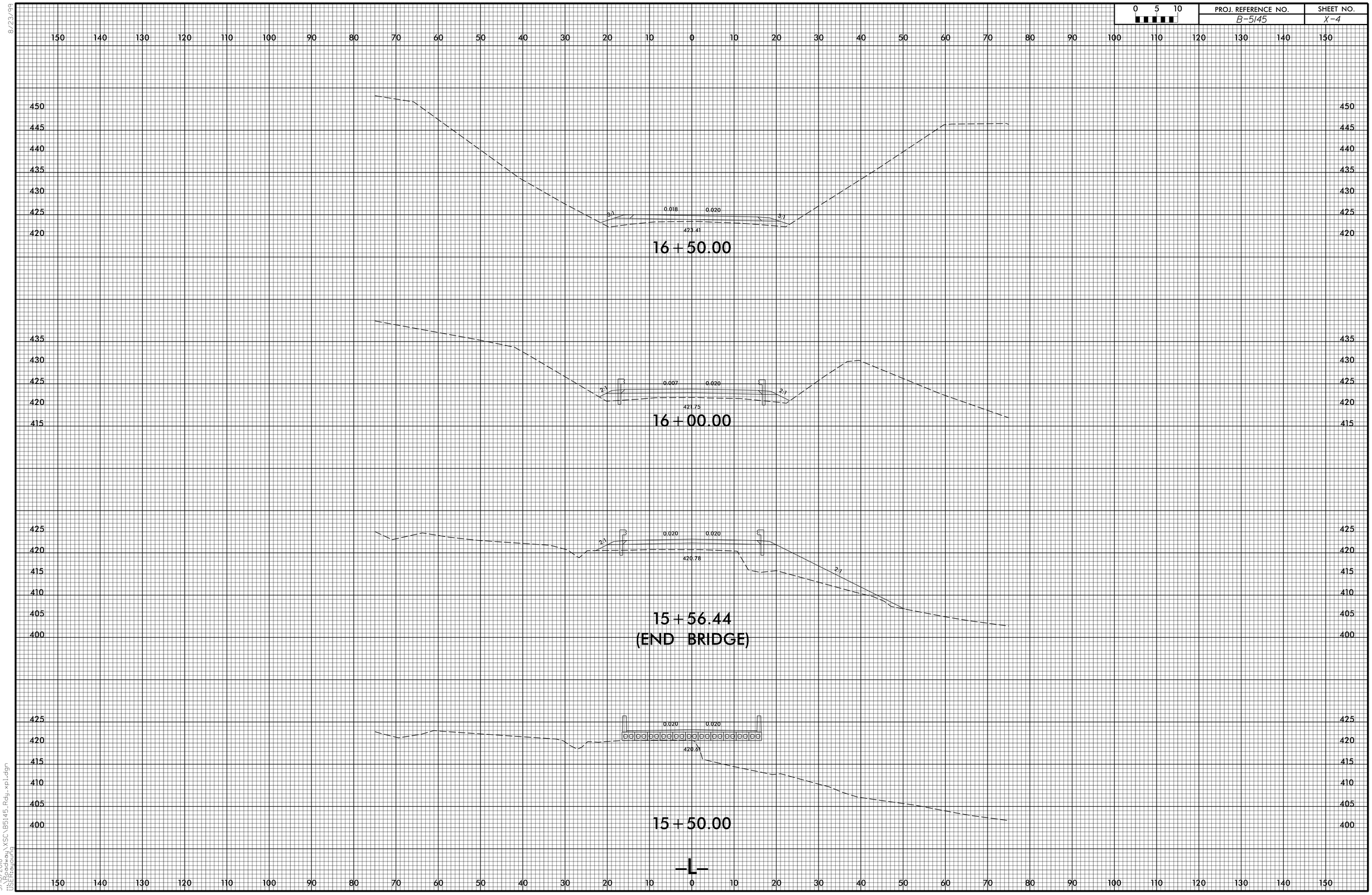

8/23/99

5/10/2018
\\Roadway\XSC\B5145_Rdy_xpl.dgn
USER:laburg

0 5 10	PROJ. REFERENCE NO.	SHEET NO.
	B-5145	X-5

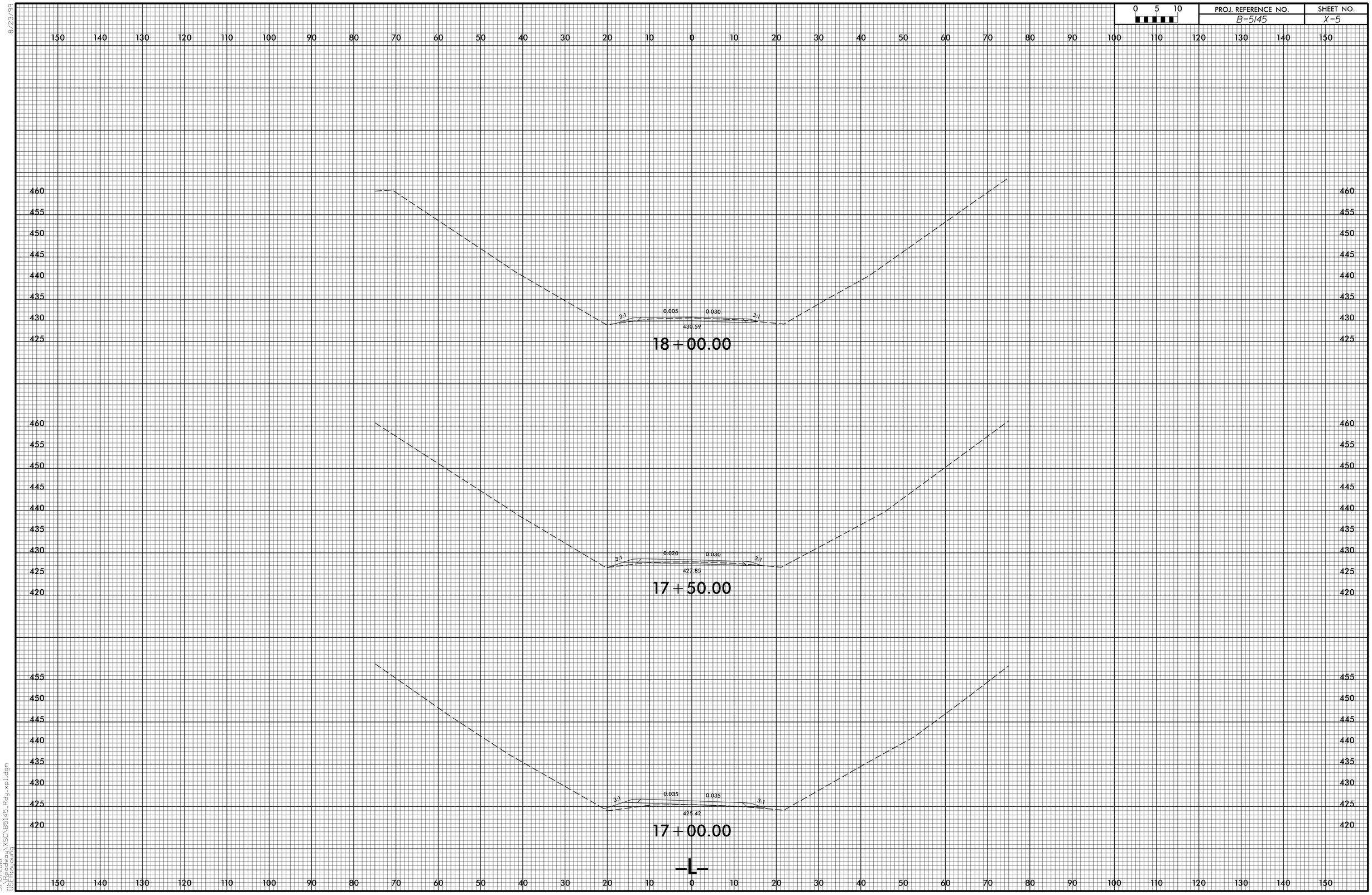

8/23/99

5/10/2018
\\Roadway\XSC\B5145_Rdy_xpl.dgn
USER:Raybourg

8/23/99

0 5 10	PROJ. REFERENCE NO.	SHEET NO.
	B-5145	X-6

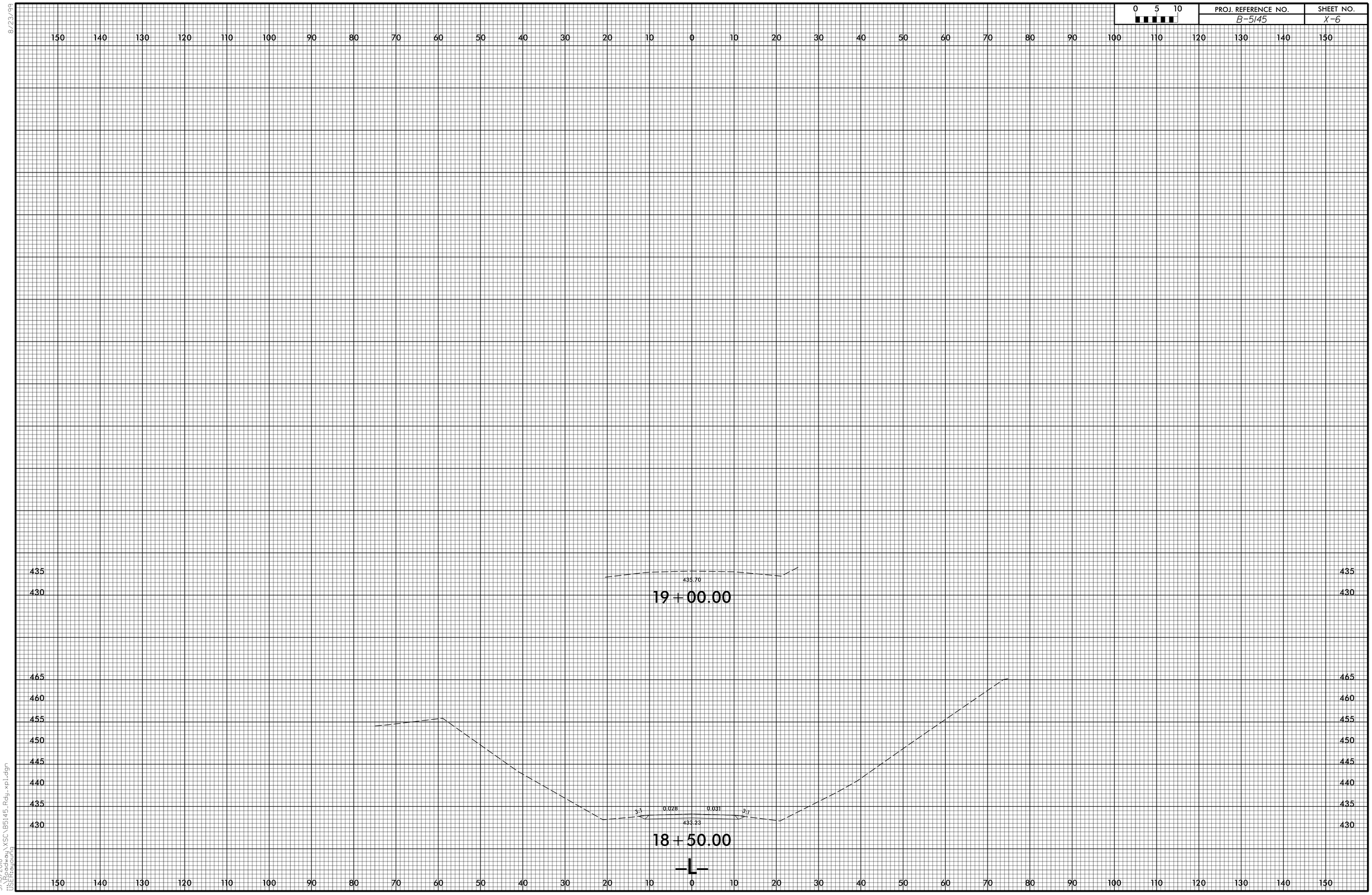

5/10/2018
\\Roadway\XSC\B5145_Rdy_xpl.dgn
USER:raybourg

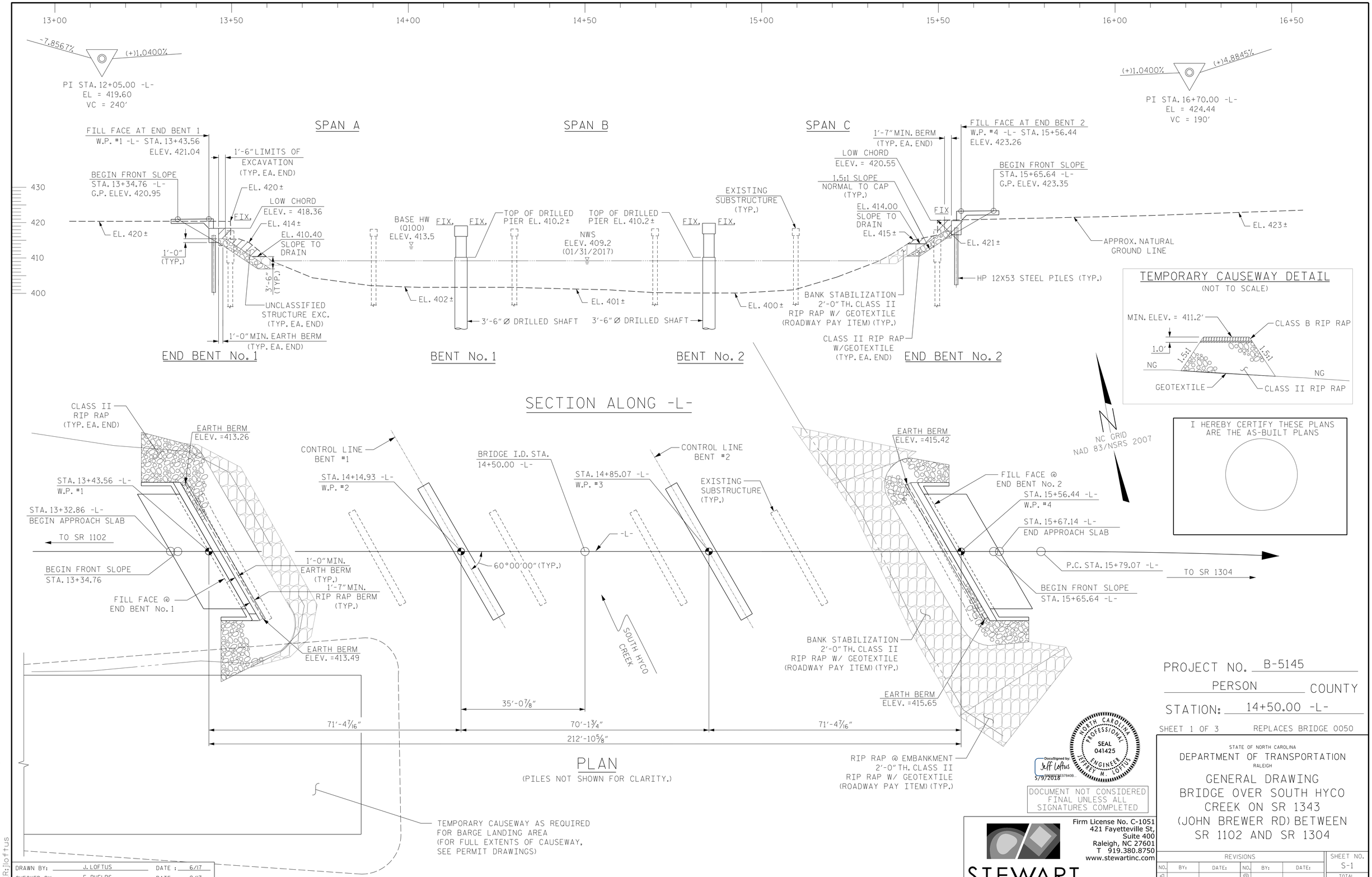
13+00
13+50
14+00
14+50
15+00
15+50
16+00
16+50
-7.8567%
(+)1.0400%
PI STA. 12+05.00 -L-
EL = 419.60
VC = 240'
(+)1.0400%
(+)4.8845%
PI STA. 16+70.00 -L-
EL = 424.44
VC = 190'
SPAN A
SPAN B
SPAN C
FILL FACE AT END BENT 1
W.P. #1 -L- STA. 13+43.56
ELEV. 421.04
1'-6" LIMITS OF EXCAVATION (TYP. EA. END)
BEGIN FRONT SLOPE
STA. 13+34.76 -L-
G.P. ELEV. 420.95
EL. 420±
LOW CHORD
ELEV. = 418.36
EL. 414±
EL. 410.40
SLOPE TO DRAIN
FIX
1'-0" (TYP.)
3'-6" (TYP.)
UNCLASSIFIED STRUCTURE EXC. (TYP. EA. END)
1'-0" MIN. EARTH BERM (TYP. EA. END)
END BENT No. 1
BASE HW (Q100)
ELEV. 413.5
TOP OF DRILLED PIER EL. 410.2±
NWS
ELEV. 409.2
(01/31/2017)
EL. 402±
EL. 401±
EL. 400±
3'-6" Ø DRILLED SHAFT
BENT No. 1
BENT No. 2
EXISTING SUBSTRUCTURE (TYP.)
1'-7" MIN. BERM (TYP. EA. END)
FILL FACE AT END BENT 2
W.P. #4 -L- STA. 15+56.44
ELEV. 423.26
LOW CHORD
ELEV. = 420.55
1.5:1 SLOPE NORMAL TO CAP (TYP.)
EL. 414.00
SLOPE TO DRAIN
EL. 415±
BEGIN FRONT SLOPE
STA. 15+65.64 -L-
G.P. ELEV. 423.35
EL. 421±
EL. 423±
APPROX. NATURAL GROUND LINE
HP 12X53 STEEL PILES (TYP.)
BANK STABILIZATION 2'-0" TH. CLASS II RIP RAP W/ GEOTEXTILE (ROADWAY PAY ITEM) (TYP.)
CLASS II RIP RAP W/GEOTEXTILE (TYP. EA. END)
END BENT No. 2
TEMPORARY CAUSEWAY DETAIL
(NOT TO SCALE)
MIN. ELEV. = 411.2'
CLASS B RIP RAP
1.0'
1.5:1
NG
GEOTEXTILE
CLASS II RIP RAP
SECTION ALONG -L-
CLASS II RIP RAP (TYP. EA. END)
EARTH BERM ELEV. =413.26
STA. 13+43.56 -L-
W.P. #1
STA. 13+32.86 -L-
BEGIN APPROACH SLAB
TO SR 1102
BEGIN FRONT SLOPE
STA. 13+34.76
FILL FACE @ END BENT No. 1
CONTROL LINE BENT #1
STA. 14+14.93 -L-
W.P. #2
BRIDGE I.D. STA. 14+50.00 -L-
STA. 14+85.07 -L-
W.P. #3
CONTROL LINE BENT #2
EXISTING SUBSTRUCTURE (TYP.)
-L-
60°00'00" (TYP.)
1'-0" MIN. EARTH BERM (TYP.)
1'-7" MIN. RIP RAP BERM (TYP.)
EARTH BERM ELEV. =413.49
SOUTH HYCO CREEK
35'-0 7/8"
71'-4 7/16"
70'-1 3/4"
71'-4 7/16"
212'-10 5/8"
EARTH BERM ELEV. =415.42
FILL FACE @ END BENT No. 2
STA. 15+56.44 -L-
W.P. #4
STA. 15+67.14 -L-
END APPROACH SLAB
P.C. STA. 15+79.07 -L-
TO SR 1304
BEGIN FRONT SLOPE
STA. 15+65.64 -L-
BANK STABILIZATION 2'-0" TH. CLASS II RIP RAP W/ GEOTEXTILE (ROADWAY PAY ITEM) (TYP.)
EARTH BERM ELEV. =415.65
RIP RAP @ EMBANKMENT 2'-0" TH. CLASS II RIP RAP W/ GEOTEXTILE (ROADWAY PAY ITEM) (TYP.)
PLAN
(PILES NOT SHOWN FOR CLARITY.)
TEMPORARY CAUSEWAY AS REQUIRED FOR BARGE LANDING AREA (FOR FULL EXTENTS OF CAUSEWAY, SEE PERMIT DRAWINGS)
NC GRID NAD 83/NSRS 2007
I HEREBY CERTIFY THESE PLANS ARE THE AS-BUILT PLANS
NORTH CAROLINA PROFESSIONAL SEAL 041425 ENGINEER JEFFREY M. LOFTUS
DocuSigned by Jeff Loftus
5/9/2018
DOCUMENT NOT CONSIDERED FINAL UNLESS ALL SIGNATURES COMPLETED
DRAWN BY: J. LOFTUS DATE: 6/17
CHECKED BY: E. PHELPS DATE: 9/17
DESIGN ENGINEER OF RECORD: J. LOFTUS DATE: 10/17
STEWART
Firm License No. C-1051
421 Fayetteville St,
Suite 400
Raleigh, NC 27601
T 919.380.8750
www.stewartinc.com
PROJECT NO. B-5145
PERSON COUNTY
STATION: 14+50.00 -L-
SHEET 1 OF 3
REPLACES BRIDGE 0050
STATE OF NORTH CAROLINA
DEPARTMENT OF TRANSPORTATION
RALEIGH
GENERAL DRAWING
BRIDGE OVER SOUTH HYCO CREEK ON SR 1343 (JOHN BREWER RD) BETWEEN SR 1102 AND SR 1304
REVISIONS
NO. BY: DATE: NO. BY: DATE:
1 3
2 4
SHEET NO. S-1
TOTAL SHEETS 22
R 2707C_SITE 3
4/17/2018
...\400_001_B5145_SMU_GD01.dgn
USER:jloftus

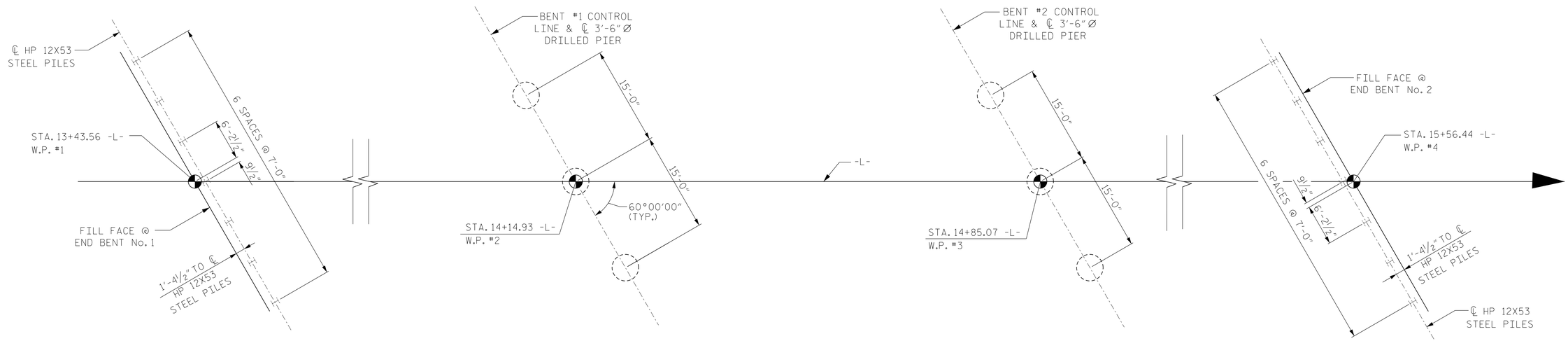

END BENT 1 | BENT 1 | BENT 2 | END BENT 2

FOUNDATION LAYOUT

ALL BENTS ARE PARALLEL

FOUNDATION NOTES

1) FOR PILES, SEE SECTION 450 OF THE STANDARD SPECIFICATIONS.

2) PILES AT END BENT NO. 1 AND END BENT NO. 2 ARE DESIGNED FOR A FACTORED RESISTANCE OF 85 TONS PER PILE.

3) DRIVE PILES AT END BENT NO. 1 AND END BENT NO. 2 TO A REQUIRED DRIVING RESISTANCE OF 145 TONS PER PILE.

4) STEEL H-PILE POINTS ARE REQUIRED FOR STEEL H-PILES AT END BENT NO. 1. AND END BENT NO. 2. FOR STEEL PILE POINTS, SEE SECTION 450 OF THE STANDARD SPECIFICATIONS.

5) FOR DRILLED PIERS, SEE SECTION 411 OF THE STANDARD SPECIFICATIONS.

6) DRILLED PIERS AT BENT NO. 1 ARE DESIGNED FOR A FACTORED RESISTANCE OF 425 TONS PER PIER. CHECK FIELD CONDITIONS FOR THE REQUIRED TIP RESISTANCE OF 190 TSF.

7) DRILLED PIERS AT BENT NO.2 ARE DESIGNED FOR A FACTORED RESISTANCE OF 425 TONS PER PIER. CHECK FIELD CONDITIONS FOR THE REQUIRED TIP RESISTANCE OF 80 TSF.

8) INSTALL DRILLED PIERS AT BENT NO. 1 TO A TIP ELEVATION NO HIGHER THAN 368 FT.

9) INSTALL DRILLED PIERS AT BENT NO. 2 TO A TIP ELEVATION NO HIGHER THAN 370 FT.

10) THE SCOUR CRITICAL ELEVATION FOR BENT NO. 1 IS ELEVATION 387 FT. SCOUR CRITICAL ELEVATIONS ARE USED TO MONITOR POSSIBLE SCOUR PROBLEMS DURING THE LIFE OF THE STRUCTURE.

11) THE SCOUR CRITICAL ELEVATION FOR BENT NO. 2 IS ELEVATION 385.5 FT. SCOUR CRITICAL ELEVATIONS ARE USED TO MONITOR POSSIBLE SCOUR PROBLEMS DURING THE LIFE OF THE STRUCTURE.

12) PERMANENT STEEL CASINGS ARE REQUIRED FOR DRILLED PIERS AT BENT NO. 1 AND BENT NO. 2. DO NOT EXTEND PERMANENT CASINGS BELOW ELEVATION 375 FT WITHOUT PRIOR APPROVAL FROM THE ENGINEER.

13) SID INSPECTIONS MAY BE REQUIRED FOR DRILLED PIERS. THE ENGINEER WILL DETERMINE THE NEED FOR SID INSPECTIONS. FOR SID INSPECTIONS, SEE SECTION 411 OF THE STANDARD SPECIFICATIONS.

14) CSL TUBES ARE REQUIRED AND CSL TESTING MAY BE REQUIRED FOR DRILLED PIERS. THE ENGINEER WILL DETERMINE THE NEED FOR CSL TESTING. FOR CSL TESTING, SEE SECTION 411 OF THE STANDARD SPECIFICATIONS.

15) DO NOT USE SLURRY CONSTRUCTION FOR DRILLED PIERS AT BENT NO. 1 AND BENT NO.2.

PROJECT NO. B-5145
PERSON COUNTY
STATION: 14+50.00 -L-

SHEET 2 OF 3

NORTH CAROLINA PROFESSIONAL SEAL 041425 ENGINEER JEFFREY M. LOFTUS

DocuSigned by: Jeff Loftus
5/9/2018

DOCUMENT NOT CONSIDERED FINAL UNLESS ALL SIGNATURES COMPLETED

STEWART
Firm License No. C-1051
421 Fayetteville St,
Suite 400
Raleigh, NC 27601
T 919.380.8750
www.stewartinc.com

STATE OF NORTH CAROLINA
DEPARTMENT OF TRANSPORTATION
RALEIGH

FOUNDATION LAYOUT

REVISIONS						SHEET NO.
NO.	BY:	DATE:	NO.	BY:	DATE:	S-2
1			3			TOTAL SHEETS
2			4			22

DRAWN BY:	J. LOFTUS	DATE :	6/17
CHECKED BY:	E. PHELPS	DATE :	9/17
DESIGN ENGINEER OF RECORD:	J. LOFTUS	DATE :	10/17

4/17/2018
...\400_002_B5145_SMU_FL02.dgn
USER:jloftus

R 2707C_SITE 3

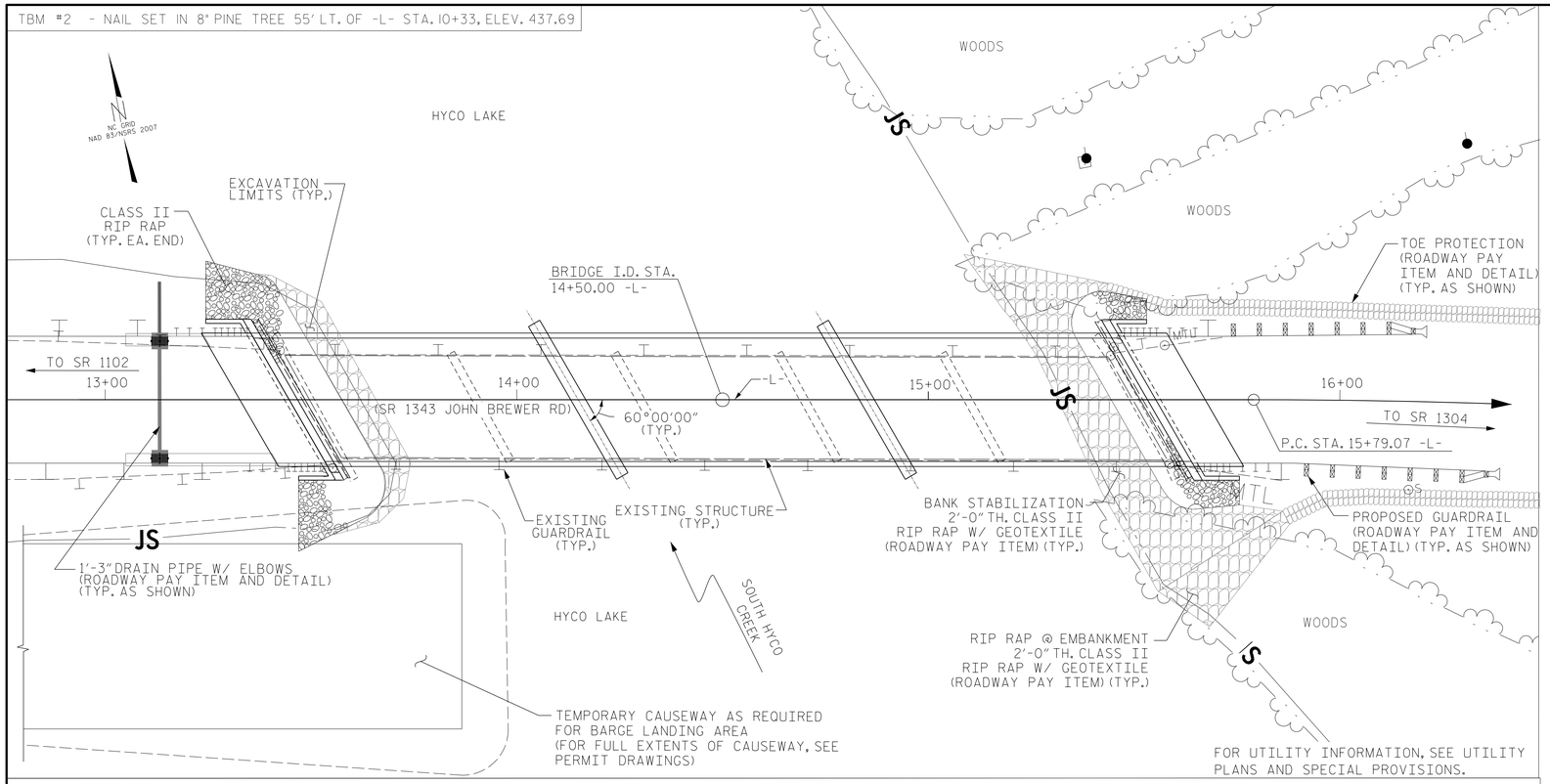

LOCATION SKETCH

GENERAL NOTES:

1. ASSUMED LIVE LOAD = HL-93 OR ALTERNATE LOADING
2. THIS BRIDGE HAS BEEN DESIGNED IN ACCORDANCE WITH THE AASHTO LRFD BRIDGE DESIGN SPECIFICATIONS
3. THIS BRIDGE IS LOCATED IN SEISMIC ZONE 1
4. THIS STRUCTURE HAS BEEN DESIGNED IN ACCORDANCE WITH "HEC 18 - EVALUATING SCOUR AT BRIDGES."
5. THE SUBSTRUCTURE OF THE EXISTING BRIDGE INDICATED ON THE PLANS IS FROM THE BEST INFORMATION AVAILABLE. SINCE THIS INFORMATION IS SHOWN FOR THE CONVENIENCE OF THE CONTRACTOR, THE CONTRACTOR SHALL HAVE NO CLAIM WHATSOEVER AGAINST THE DEPARTMENT OF TRANSPORTATION FOR ANY DELAYS OR ADDITIONAL COST INCURRED BASED ON DIFFERENCE BETWEEN THE EXISTING BRIDGE SUBSTRUCTURE SHOWN ON THE PLANS AND THE ACTUAL CONDITIONS AT THE PROJECT SITE.
6. REMOVAL OF THE EXISTING BRIDGE SHALL BE PERFORMED SO AS NOT TO ALLOW DEBRIS TO FALL INTO THE WATER. THE CONTRACTOR SHALL REMOVE THE BRIDGE AND SUBMIT PLANS FOR DEMOLITION IN ACCORDANCE WITH ARTICLE 402-2 OF THE STANDARD SPECIFICATIONS.
7. FOR OTHER DESIGN DATA AND GENERAL NOTES, SEE SHEET SN.
8. FOR SUBMITTAL OF WORKING DRAWINGS, SEE SPECIAL PROVISIONS.
9. FOR FALSEWORK AND FORMWORK, SEE SPECIAL PROVISIONS.
10. FOR CRANE SAFETY, SEE SPECIAL PROVISIONS.
11. FOR GROUT FOR STRUCTURES, SEE SPECIAL PROVISIONS.
12. FOR EROSION CONTROL MEASURES, SEE EROSION CONTROL PLANS.
13. ASPHALT WEARING SURFACE IS INCLUDED IN ROADWAY QUANTITY ON ROADWAY PLANS.
14. THE MATERIAL SHOWN IN THE CROSS-HATCHED AREA SHALL BE EXCAVATED FOR A DISTANCE OF 30'± FT LEFT SIDE AND 30'± RIGHT SIDE OF CENTERLINE ROADWAY AS DIRECTED BY THE ENGINEER. THIS WORK WILL BE PAID FOR AT THE CONTRACT LUMP SUM PRICE FOR UNCLASSIFIED STRUCTURE EXCAVATION. SEE SECTION 412 OF THE STANDARD SPECIFICATIONS
15. THE EXISTING STRUCTURE #720050 CONSISTING OF FIVE (5) STEEL GIRDER SPANS @ 40'-9", 40'-0", 40'-0", 40'-0" & 40'-9" (201'-6" TOTAL LENGTH), 24'-9" CLEAR ROADWAY WIDTH AND TIMBER DECK WITH AN ASPHALT WEARING SURFACE ON TIMBER END BENTS & BENTS WITH TIMBER PILES ENCASED WITH CONCRETE NEAR THE WATER LINE AND LOCATED AT THE PROPOSED STRUCTURE SHALL BE REMOVED IN THEIR ENTIRETY (INCLUDING PILES AND CONCRETE ENCASEMENT). PILE REMOVAL (INCLUDING CONCRETE ENCASED PILES) SHALL BE ACCOMPLISHED BY PULLING PILES OUT. IF PILE BREAKS DURING PULLING, IT SHALL BE CUT OFF ONE FOOT BELOW THE MUD LINE.
16. INASMUCH AS THE PAINT SYSTEM ON THE EXISTING STRUCTURAL STEEL CONTAINS LEAD, THE CONTRACTOR'S ATTENTION IS DIRECTED TO ARTICLE 107-1 OF THE STANDARD SPECIFICATIONS. ANY COSTS RESULTING FROM COMPLIANCE WITH APPLICABLE STATE OR FEDERAL REGULATIONS PERTAINING TO HANDLING OF MATERIALS CONTAINING LEAD BASED PAINT SHALL BE INCLUDED IN THE BID PRICE FOR "REMOVAL OF EXISTING STRUCTURE AT STATION 14+50.00 -L-."
17. FOR ASBESTOS ASSESSMENT, SEE SPECIAL PROVISIONS.
18. AT THE CONTRACTOR'S OPTION, AND UPON REMOVAL OF THE CAUSEWAY, THE CLASS II RIP RAP USED IN THE CAUSEWAY MAY BE PLACED AS RIP RAP SLOPE PROTECTION. SEE SPECIAL PROVISIONS FOR CONSTRUCTION, MAINTENANCE AND REMOVAL OF TEMPORARY ACCESS AT STATION 14+50.00 -L-.

TOTAL BILL OF MATERIAL

	CONSTRUCTION MAINTENANCE & REMOVAL OF TEMP. ACCESS	REMOVAL OF EXISTING STRUCTURE	3'-6" DIA. DRILLED PIERS NOT IN SOIL	3'-6" DIA. DRILLED PIERS IN SOIL	PERMANENT STEEL CASING FOR 3'-6" Ø DRILLED PIER	SID INSPECTIONS	CSL TESTING	UNCLASSIFIED STRUCTURE EXCAVATION	CLASS A CONCRETE	BRIDGE APPROACH SLABS	REINFORCING STEEL	SPIRAL COLUMN REINFORCING STEEL	PILE DRIVING EQUIPMENT SETUP FOR HP 12X53 STEEL PILES	HP 12X53 STEEL PILES		STEEL PILE POINTS	VERTICAL CONCRETE BARRIER RAIL	RIP RAP CLASS II (2'-0" THICK)	GEOTEXTILE FOR DRAINAGE	ELASTOMERIC BEARINGS	3'-0" × 2'-0" PRESTRESSED CORED SLABS		ASBESTOS ASSESSMENT
	LUMP SUM	LUMP SUM	LIN. FT.	LIN. FT.	LIN. FT.	EACH	EACH	LUMP SUM	CY	LUMP SUM	LBS	LBS	EACH	No.	LF	EACH	LF	TON	SY	LUMP SUM	No.	LF	LUMP SUM
SUPERSTRUCTURE										LUMP SUM							420.87			LUMP SUM	33	2310.00	
END BENT No. 1								LUMP SUM	24.3		2929		7	7	265	7		108	120				
BENT No. 1			25	101.6	105.6	1	1		22.2		12229	3050											
BENT No. 2			25	95.6	105.6	1	1		22.8		12030	2975											
END BENT No. 2								LUMP SUM	24.3		2929		7	7	140	7		115	127				
TOTAL	LUMP SUM	LUMP SUM	50	197.2	211.2	2	2	LUMP SUM	93.6	LUMP SUM	30117	6025	14	14	405	14	420.87	223	247	LUMP SUM	33	2310.00	LUMP SUM

HYDRAULIC DATA

DESIGN DISCHARGE	6500 CFS
FREQUENCY OF DESIGN FLOOD	25 YR.
DESIGN HIGHWATER ELEV.	410.50 FT.
DRAINAGE AREA	61.8 SQ. MI.
BASE DISCHARGE (Q100)	11392 C.F.S
BASE HIGHWATER ELEV.	413.50 FT

OVERTOPPING FLOOD DATA

OVERTOPPING DISCHARGE	25986 CFS
FREQUENCY OF OVERTOPPING FLOOD	500+ YR.
OVERTOPPING FLOOD ELEV.	* 420.70 FT.

* OVERTOPPING STA. 12+96.90 -L-

DocuSigned by: Jeff Loftus 5/9/2018

NORTH CAROLINA PROFESSIONAL SEAL 041425 ENGINEER JEFFREY M. LOFTUS

DOCUMENT NOT CONSIDERED FINAL UNLESS ALL SIGNATURES COMPLETED

STEWART
Firm License No. C-1051
421 Fayetteville St,
Suite 400
Raleigh, NC 27601
T 919.380.8750
www.stewartinc.com

PROJECT NO. B-5145
PERSON COUNTY
STATION: 14+50.00 -L-

SHEET 3 OF 3

STATE OF NORTH CAROLINA
DEPARTMENT OF TRANSPORTATION
RALEIGH

GENERAL DRAWING
BRIDGE OVER SOUTH HYCO CREEK ON SR 1343 (JOHN BREWER RD) BETWEEN SR 1102 AND SR 1304

REVISIONS						SHEET NO.
NO.	BY:	DATE:	NO.	BY:	DATE:	S-3
1			3			TOTAL SHEETS
2			4			22

DRAWN BY: J. LOFTUS DATE: 6/17
CHECKED BY: E. PHELPS DATE: 9/17
DESIGN ENGINEER OF RECORD: J. LOFTUS DATE: 10/17

R 2707C_SITE 3
4/17/2018
...\400_003_B5145_SMU_LS03.dgn
USER:jloftus

LOAD AND RESISTANCE FACTOR RATING (LRFD) SUMMARY FOR PRESTRESSED CONCRETE GIRDERS

LEVEL		VEHICLE	WEIGHT (W) (TONS)	CONTROLLING LOAD RATING	MINIMUM RATING FACTORS (RF)	TONS = W X RF	STRENGTH I LIMIT STATE											SERVICE III LIMIT STATE						COMMENT NUMBER
								MOMENT					SHEAR						MOMENT					
							LIVELOAD FACTORS	DISTRIBUTION FACTORS (DF)	RATING FACTOR	SPAN	GIRDER LOCATION	DISTANCE FROM LEFT END OF SPAN (ft)	DISTRIBUTION FACTORS (DF)	RATING FACTOR	SPAN	GIRDER LOCATION	DISTANCE FROM LEFT END OF SPAN (ft)	LIVELOAD FACTORS	DISTRIBUTION FACTORS (DF)	RATING FACTOR	SPAN	GIRDER LOCATION	DISTANCE FROM LEFT END OF SPAN (ft)	
DESIGN LOAD RATING		HL-93(Inv)	N/A	1	1.06	--	1.75	0.248	1.14	70'	EL	34.423	0.655	1.06	70'	EL	6.885	0.80	0.248	1.11	70'	EL	34.423	
		HL-93(Opr)	N/A	--	1.374	--	1.35	0.248	1.48	70'	EL	34.423	0.655	1.37	70'	EL	6.885	N/A	--	--	--	--	--	
		HS-20(Inv)	36.000	2	1.32	47.508	1.75	0.248	1.48	70'	EL	34.423	0.655	1.32	70'	EL	6.885	0.80	0.248	1.44	70'	EL	34.423	
		HS-20(Opr)	36.000	--	1.711	61.585	1.35	0.248	1.91	70'	EL	34.423	0.655	1.71	70'	EL	6.885	N/A	--	--	--	--	--	
LEGAL LOAD RATING	SV	SNSH	13.500	--	3.204	43.258	1.4	0.248	4.12	70'	EL	34.423	0.655	3.9	70'	EL	6.885	0.80	0.248	3.20	70'	EL	34.423	
		SNGARBS2	20.000	--	2.403	48.063	1.4	0.248	3.09	70'	EL	34.423	0.655	2.78	70'	EL	6.885	0.80	0.248	2.40	70'	EL	34.423	
		SNAGRIS2	22.000	--	2.282	50.21	1.4	0.248	2.94	70'	EL	34.423	0.655	2.58	70'	EL	6.885	0.80	0.248	2.28	70'	EL	34.423	
		SNCOTTS3	27.250	--	1.595	43.463	1.4	0.248	2.05	70'	EL	34.423	0.655	1.95	70'	EL	6.885	0.80	0.248	1.59	70'	EL	34.423	
		SNAGGRS4	34.925	--	1.339	46.755	1.4	0.248	1.72	70'	EL	34.423	0.655	1.62	70'	EL	6.885	0.80	0.248	1.34	70'	EL	34.423	
		SNS5A	35.550	--	1.309	46.526	1.4	0.248	1.68	70'	EL	34.423	0.655	1.65	70'	EL	6.885	0.80	0.248	1.31	70'	EL	34.423	
		SNS6A	39.950	--	1.203	48.069	1.4	0.248	1.55	70'	EL	34.423	0.655	1.5	70'	EL	6.885	0.80	0.248	1.20	70'	EL	34.423	
		SNS7B	42.000	--	1.146	48.129	1.4	0.248	1.47	70'	EL	34.423	0.655	1.48	70'	EL	6.885	0.80	0.248	1.15	70'	EL	34.423	
	TTST	TNAGRIT3	33.000	--	1.468	48.444	1.4	0.248	1.89	70'	EL	34.423	0.655	1.79	70'	EL	6.885	0.80	0.248	1.47	70'	EL	34.423	
		TNT4A	33.075	--	1.475	48.79	1.4	0.248	1.9	70'	EL	34.423	0.655	1.74	70'	EL	6.885	0.80	0.248	1.48	70'	EL	34.423	
		TNT6A	41.600	--	1.208	50.272	1.4	0.248	1.55	70'	EL	34.423	0.655	1.58	70'	EL	6.885	0.80	0.248	1.21	70'	EL	34.423	
		TNT7A	42.000	--	1.216	51.061	1.4	0.248	1.56	70'	EL	34.423	0.655	1.55	70'	EL	6.885	0.80	0.248	1.22	70'	EL	34.423	
		TNT7B	42.000	--	1.261	52.955	1.4	0.248	1.62	70'	EL	34.423	0.655	1.44	70'	EL	6.885	0.80	0.248	1.26	70'	EL	34.423	
		TNAGRIT4	43.000	--	1.197	51.476	1.4	0.248	1.54	70'	EL	34.423	0.655	1.4	70'	EL	6.885	0.80	0.248	1.20	70'	EL	34.423	
		TNAGT5A	45.000	--	1.128	50.745	1.4	0.248	1.45	70'	EL	34.423	0.655	1.39	70'	EL	6.885	0.80	0.248	1.13	70'	EL	34.423	
		TNAGT5B	45.000	3	1.113	50.088	1.4	0.248	1.43	70'	EL	34.423	0.655	1.33	70'	EL	6.885	0.80	0.248	1.11	70'	EL	34.423	

LOAD FACTORS:

	LIMIT STATE	γ_{DC}	γ_{DW}
DESIGN LOAD RATING FACTORS	STRENGTH I	1.25	1.50
	SERVICE III	1.00	1.00

NOTES:

MINIMUM RATING FACTORS ARE BASED ON THE STRENGTH I AND SERVICE III LIMIT STATES.

ALLOWABLE STRESSES FOR SERVICE III LIMIT STATE ARE AS REQUIRED FOR DESIGN.

CONTROLLING LOAD RATING

(1) DESIGN LOAD RATING (HL-93)

(2) DESIGN LOAD RATING (HS-20)

(3) LEGAL LOAD RATING **

** SEE CHART FOR VEHICLE TYPE

GIRDER LOCATION

I - INTERIOR GIRDER
EL - EXTERIOR LEFT GIRDER
ER - EXTERIOR RIGHT GIRDER

LRFR SUMMARY

FOR SPAN A, SPAN B & SPAN C

PROJECT NO. B-5145

PERSON COUNTY

STATION: 14+50.00 -L-

NORTH CAROLINA PROFESSIONAL SEAL 041425 ENGINEER JEFFREY M. LOFTUS

DocuSigned by: Jeff Loftus 5/9/2018

DOCUMENT NOT CONSIDERED FINAL UNLESS ALL SIGNATURES COMPLETED

STEWART

Firm License No. C-1051
421 Fayetteville St,
Suite 400
Raleigh, NC 27601
T 919.380.8750
www.stewartinc.com

STATE OF NORTH CAROLINA
DEPARTMENT OF TRANSPORTATION
RALEIGH

STANDARD
LRFR SUMMARY FOR
70' CORED SLAB UNIT
60° SKEW
(NON-INTERSTATE TRAFFIC)

REVISIONS						SHEET NO.
NO.	BY:	DATE:	NO.	BY:	DATE:	S-4
1			3			TOTAL SHEETS
2			4			22

DRAWN BY: J. LOFTUS DATE: 6/17
CHECKED BY: E. PHELPS DATE: 9/17
DESIGN ENGINEER OF RECORD: J. LOFTUS DATE: 10/17

R 2707C_SITE 3

4/17/2018
...\400_004_B5145_SMU_LRFR01.dgn
USER:jloftus

STD. NO. 24LRFR1_60&120S_70L

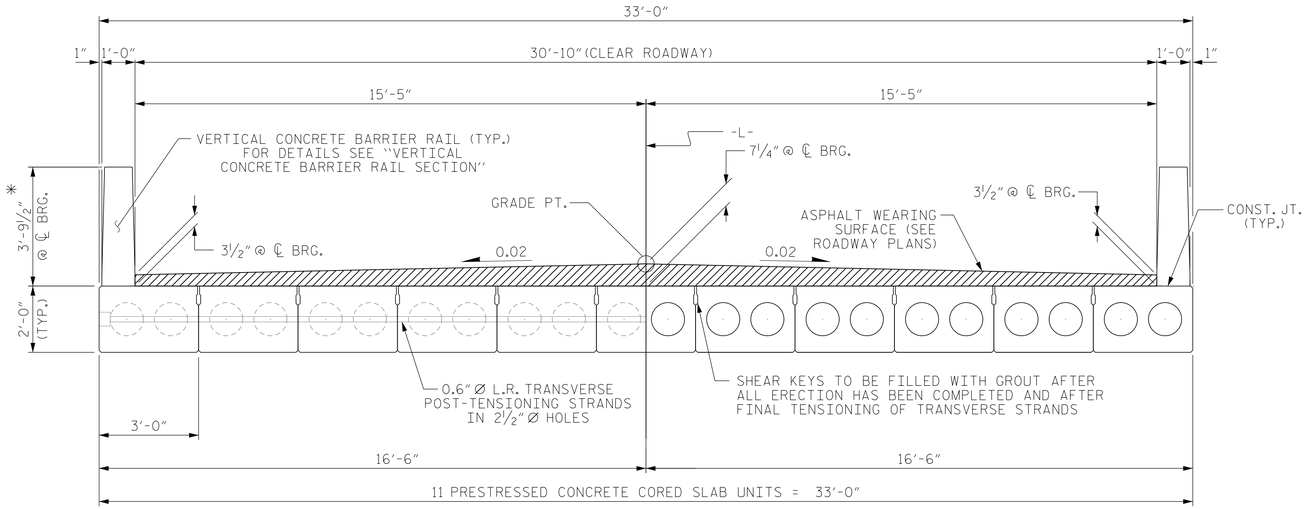

HALF SECTION
AT INTERMEDIATE DIAPHRAGMS

TYPICAL SECTION

HALF SECTION
THROUGH VOIDS

* - THE MAXIMUM BARRIER RAIL HEIGHT AND ASPHALT THICKNESS IS SHOWN. THE HEIGHT OF THE BARRIER RAIL AND ASPHALT THICKNESS VARIES WHILE THE TOP OF THE BARRIER RAIL FOLLOWS THE PROFILE OF THE GUTTERLINE. FOR RAIL HEIGHT DETAILS AND ASPHALT THICKNESS, SEE THE "VERTICAL CONCRETE BARRIER RAIL SECTION" DETAIL.

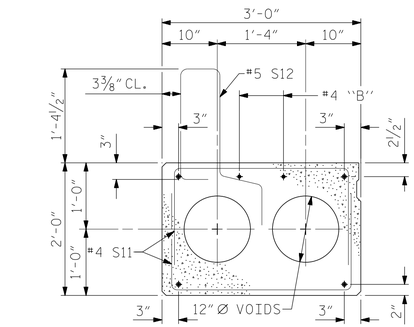

EXTERIOR SLAB SECTION

(FOR PRESTRESSED STRAND LAYOUT, SEE INTERIOR SLAB SECTION.)

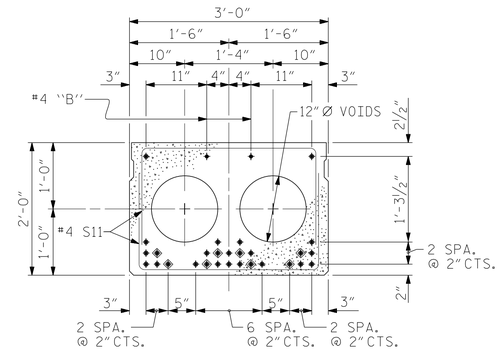

INTERIOR SLAB SECTION (ALL SPANS)

(28 STRANDS REQUIRED)

0.6" Ø LOW RELAXATION STRAND LAYOUT

◈ BOND SHALL BE BROKEN ON THESE STRANDS FOR A DISTANCE OF 12'-0" FROM END OF CORED SLAB UNIT. SEE STANDARD SPECIFICATIONS, ARTICLE 1078-7.

◉ OPTIONAL FULL LENGTH DEBONDED STRANDS. THESE STRANDS ARE NOT REQUIRED. IF THE FABRICATOR CHOOSES TO INCLUDE THESE STRANDS IN THE CORED SLAB UNIT, THE STRANDS SHALL BE DEBONDED FOR THE FULL LENGTH OF THE UNIT AT NO ADDITIONAL COST. SEE STANDARD SPECIFICATIONS, ARTICLE 1078-7.

DEBONDING LEGEND

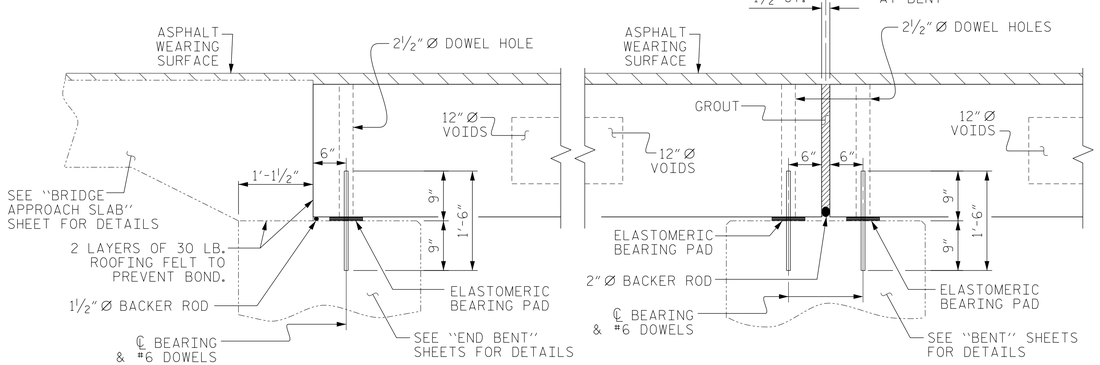

SECTION AT END BENT

SECTION AT BENT

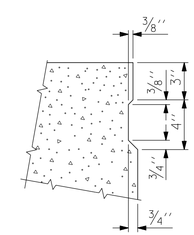

SHEAR KEY DETAIL

NOTE: OMIT SHEAR KEY ON OUTSIDE FACE OF EXTERIOR CORED SLABS.

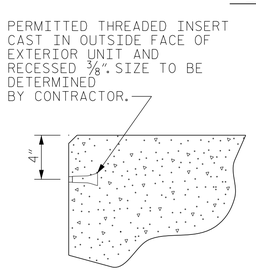

THREADED INSERT DETAIL

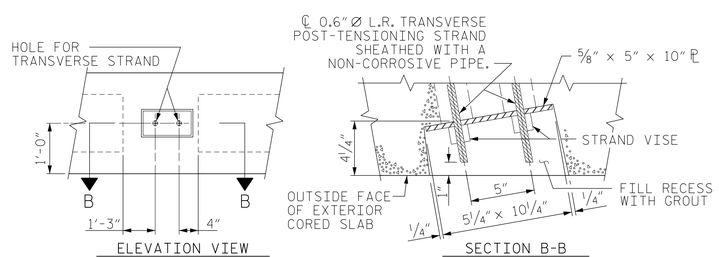

ELEVATION VIEW

SECTION B-B

GROUTED RECESS AT END OF POST-TENSIONED STRAND CORED SLABS

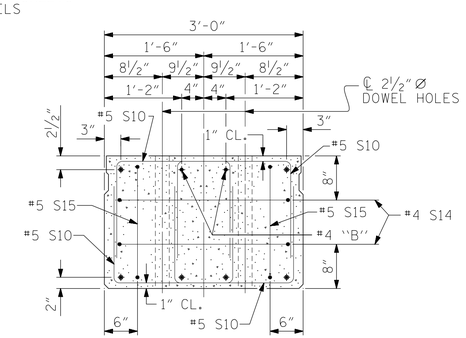

END ELEVATION

SHOWING PLACEMENT OF DOUBLE STIRRUPS AND LOCATION OF DOWEL HOLES. (STRAND LAYOUT NOT SHOWN.) INTERIOR SLAB UNIT SHOWN-EXTERIOR SLAB UNIT SIMILAR EXCEPT SHEAR KEY LOCATION.

PROJECT NO. B-5145
PERSON COUNTY
STATION: 14+50.00 -L-

SHEET 1 OF 6

NORTH CAROLINA PROFESSIONAL SEAL 041425 ENGINEER JEFFREY M. LOFTUS

DocuSigned by: Jeff Loftus 4/9/2018

DOCUMENT NOT CONSIDERED FINAL UNLESS ALL SIGNATURES COMPLETED

STATE OF NORTH CAROLINA
DEPARTMENT OF TRANSPORTATION
RALEIGH

STANDARD
3'-0" X 2'-0"
PRESTRESSED CONCRETE CORED SLAB UNIT

STEWART
Firm License No. C-1051
421 Fayetteville St, Suite 400
Raleigh, NC 27601
T 919.380.8750
www.stewartinc.com

REVISIONS						SHEET NO.
NO.	BY:	DATE:	NO.	BY:	DATE:	S-5
1			3			TOTAL SHEETS
2			4			22

DRAWN BY:	J. LOFTUS	DATE :	6/17
CHECKED BY:	E. PHELPS	DATE :	9/17
DESIGN ENGINEER OF RECORD:	J. LOFTUS	DATE :	10/17

STD. NO. 24PCS4_33_60S

R 2707C_SITE 3
4/17/2018
...\400_005_B5145_SMU_SUP01.dgn
USER:jloftus

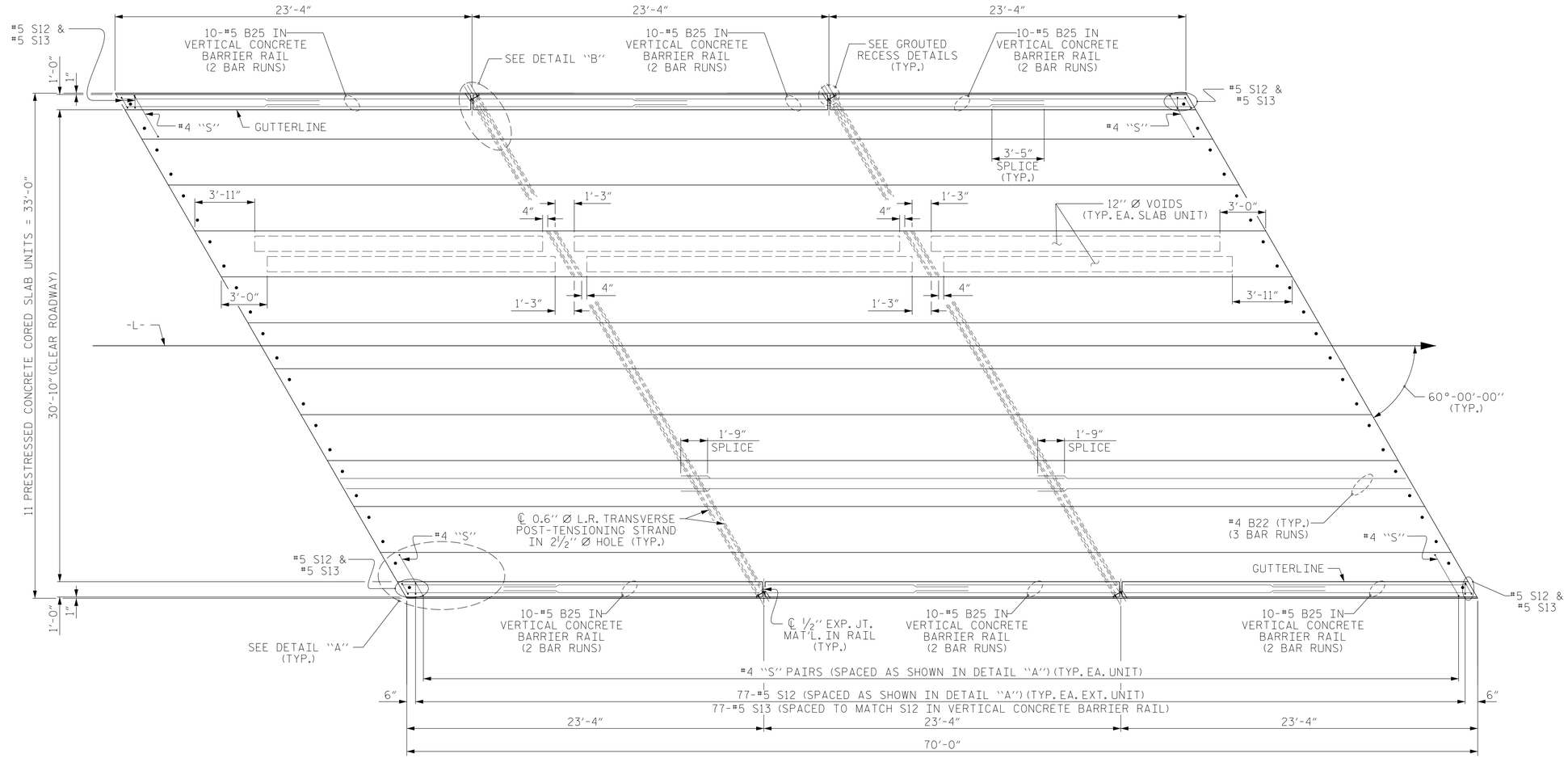

PLAN OF SPAN A

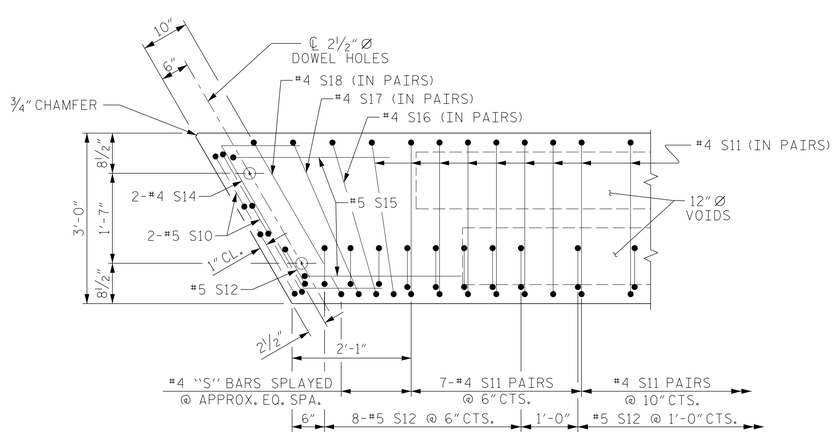

DETAIL "A"

(SIMILAR EACH END OF UNIT)
NOTE: EXTERIOR UNIT SHOWN - INTERIOR
UNIT SIMILAR EXCEPT OMIT #5 S12 BARS.

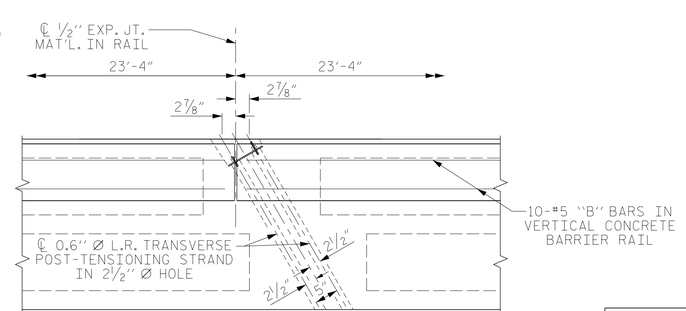

DETAIL "B"

#4 S11 BARS MAY BE SHIFTED AS NECESSARY
TO MAINTAIN 1" CLEAR TO GROUTED RECESS AND
2½" Ø TRANSVERSE POST-TENSIONING STRAND HOLES

PROJECT NO. B-5145
PERSON COUNTY
STATION: 14+50.00 -L-

SHEET 2 OF 6

NORTH CAROLINA PROFESSIONAL SEAL 041425 ENGINEER JEFFREY M. LOFTUS

DocuSigned by: Jeff Loftus
5/9/2018

DOCUMENT NOT CONSIDERED
FINAL UNLESS ALL
SIGNATURES COMPLETED

STEWART
Firm License No. C-1051
421 Fayetteville St,
Suite 400
Raleigh, NC 27601
T 919.380.8750
www.stewartinc.com

STATE OF NORTH CAROLINA
DEPARTMENT OF TRANSPORTATION
RALEIGH

SPAN A
PLAN OF 70' UNIT
30'-10" CLEAR ROADWAY
60° SKEW

REVISIONS						SHEET NO.
NO.	BY:	DATE:	NO.	BY:	DATE:	S-6
1			3			TOTAL SHEETS
2			4			22

DRAWN BY: J. LOFTUS DATE: 6/17
CHECKED BY: E. PHELPS DATE: 9/17
DESIGN ENGINEER OF RECORD: J. LOFTUS DATE: 10/17

4/17/2018
...\400_006_B5145_SMU_SUP02.dgn
USER:jloftus

R 2707C_SITE 3

STD. NO. 24PCS_33_60S_70L

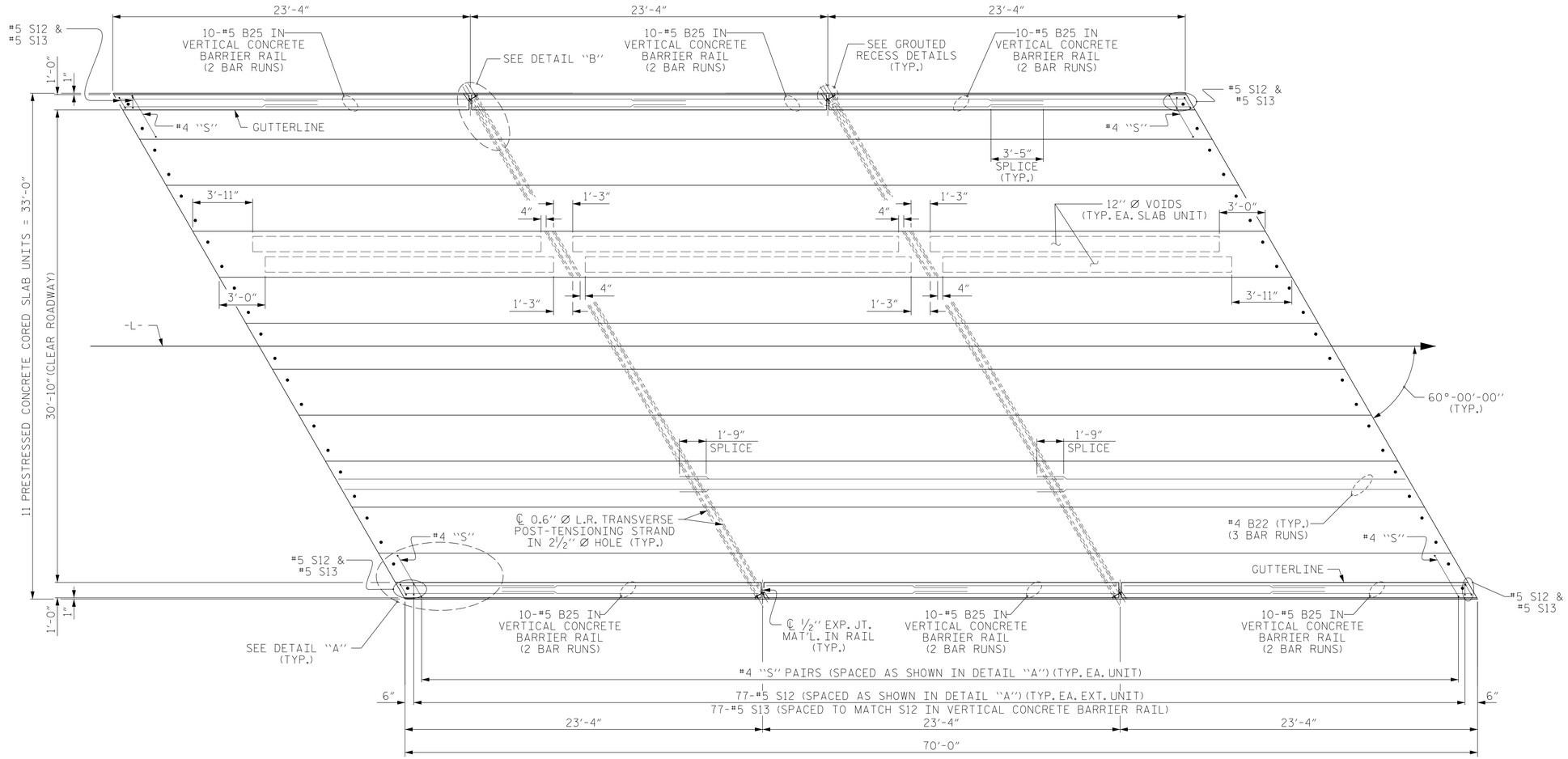

PLAN OF SPAN B

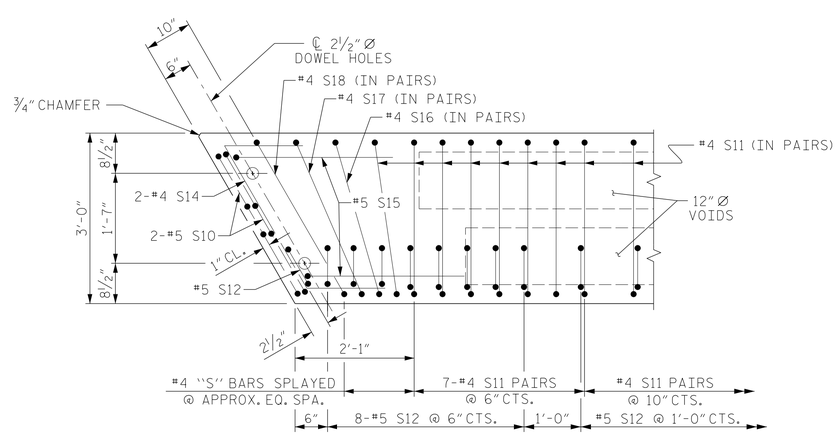

DETAIL "A"

(SIMILAR EACH END OF UNIT)
NOTE: EXTERIOR UNIT SHOWN - INTERIOR
UNIT SIMILAR EXCEPT OMIT #5 S12 BARS.

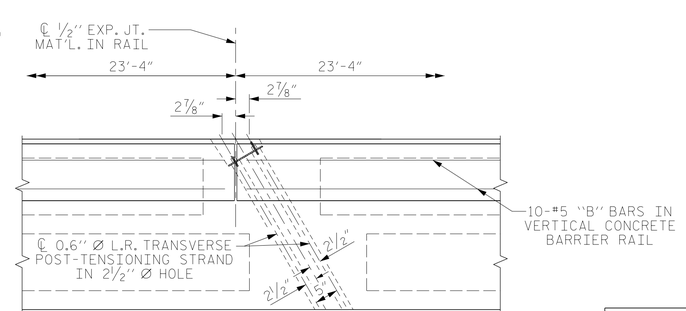

DETAIL "B"

#4 S11 BARS MAY BE SHIFTED AS NECESSARY
TO MAINTAIN 1" CLEAR TO GROUTED RECESS AND
2½" Ø TRANSVERSE POST-TENSIONING STRAND HOLES

PROJECT NO. B-5145
PERSON COUNTY
STATION: 14+50.00 -L-

SHEET 3 OF 6

NORTH CAROLINA PROFESSIONAL SEAL 041425 ENGINEER JEFFREY M. LOFTUS

DocuSigned by: Jeff Loftus
5/9/2018

DOCUMENT NOT CONSIDERED
FINAL UNLESS ALL
SIGNATURES COMPLETED

STEWART
Firm License No. C-1051
421 Fayetteville St,
Suite 400
Raleigh, NC 27601
T 919.380.8750
www.stewartinc.com

STATE OF NORTH CAROLINA
DEPARTMENT OF TRANSPORTATION
RALEIGH

SPAN B
PLAN OF 70' UNIT
30'-10" CLEAR ROADWAY
60° SKEW

REVISIONS						SHEET NO.
NO.	BY:	DATE:	NO.	BY:	DATE:	S-7
1			3			TOTAL SHEETS
2			4			22

DRAWN BY: J. LOFTUS DATE: 6/17
CHECKED BY: E. PHELPS DATE: 9/17
DESIGN ENGINEER OF RECORD: J. LOFTUS DATE: 10/17

4/17/2018
...\400_007_B5145_SMU_SUP03.dgn
USER: jloftus

R 2707C_SITE 3

STD. NO. 24PCS_33_60S_70L

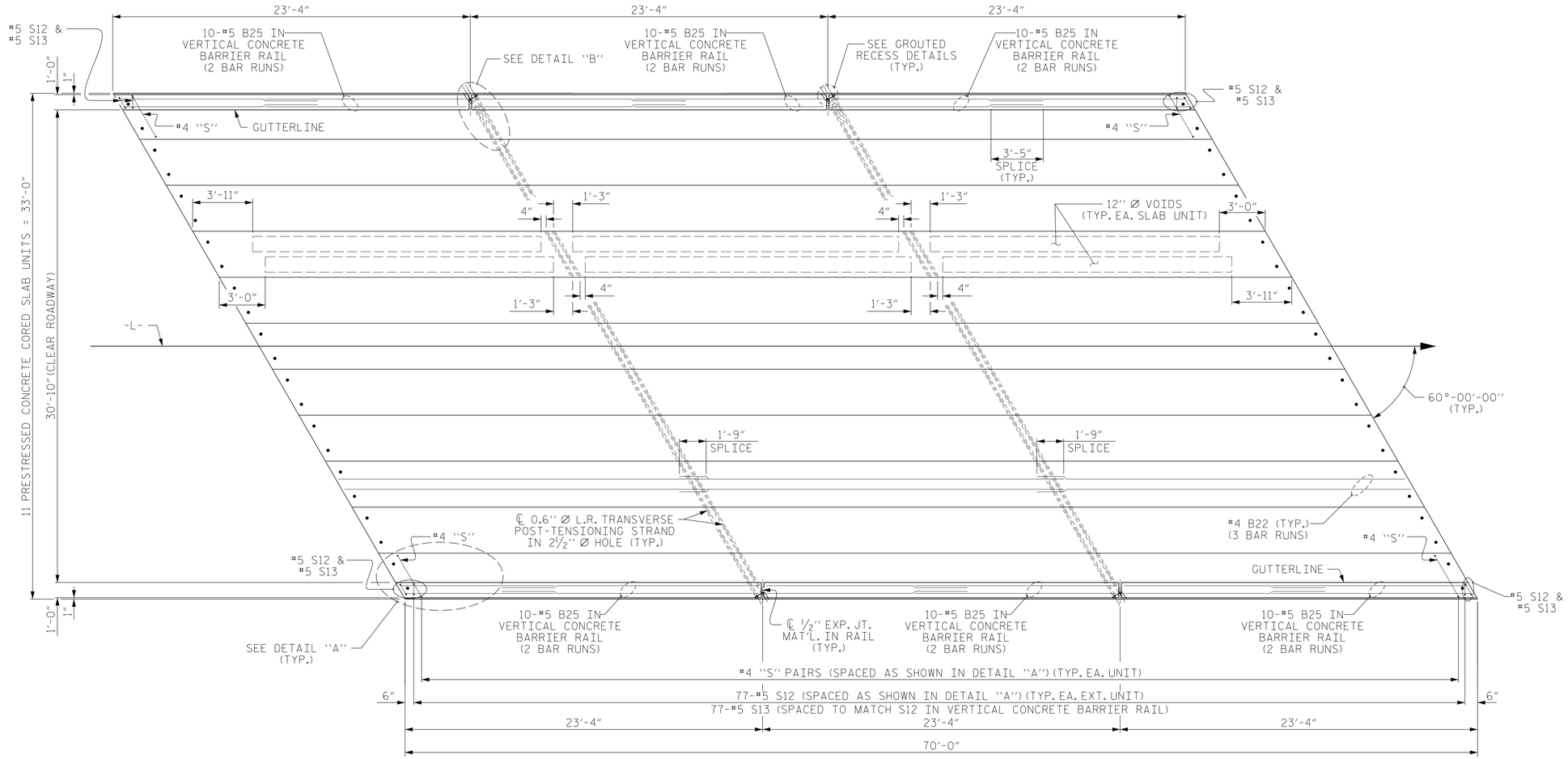

PLAN OF SPAN C

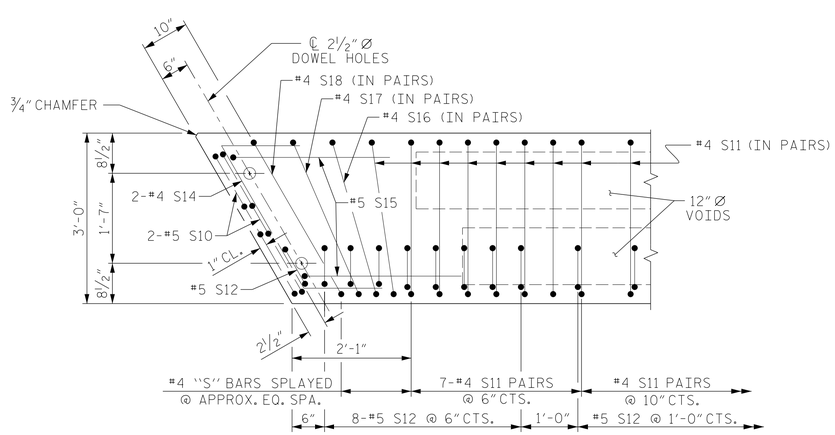

DETAIL "A"

(SIMILAR EACH END OF UNIT)
NOTE: EXTERIOR UNIT SHOWN - INTERIOR
UNIT SIMILAR EXCEPT OMIT #5 S12 BARS.

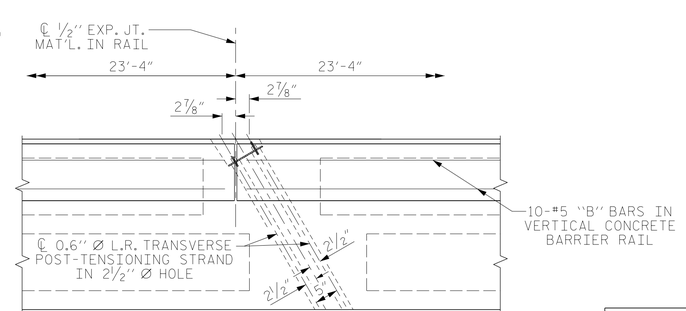

DETAIL "B"

#4 S11 BARS MAY BE SHIFTED AS NECESSARY
TO MAINTAIN 1" CLEAR TO GROUTED RECESS AND
2½" Ø TRANSVERSE POST-TENSIONING STRAND HOLES

PROJECT NO. B-5145
PERSON COUNTY
STATION: 14+50.00 -L-

SHEET 4 OF 6

NORTH CAROLINA PROFESSIONAL SEAL 041425 ENGINEER JEFFREY M. LOFTUS

DocuSigned by: Jeff Loftus
5/9/2018

DOCUMENT NOT CONSIDERED
FINAL UNLESS ALL
SIGNATURES COMPLETED

STEWART
Firm License No. C-1051
421 Fayetteville St,
Suite 400
Raleigh, NC 27601
T 919.380.8750
www.stewartinc.com

STATE OF NORTH CAROLINA
DEPARTMENT OF TRANSPORTATION
RALEIGH

SPAN C
PLAN OF 70' UNIT
30'-10" CLEAR ROADWAY
60° SKEW

REVISIONS						SHEET NO.
NO.	BY:	DATE:	NO.	BY:	DATE:	S-8
1			3			TOTAL SHEETS
2			4			22

DRAWN BY: J. LOFTUS DATE: 6/17
CHECKED BY: E. PHELPS DATE: 9/17
DESIGN ENGINEER OF RECORD: J. LOFTUS DATE: 10/17

4/17/2018
...\400_008_B5145_SMU_SUP04.dgn
USER: jloftus

R 2707C_SITE 3

STD. NO. 24PCS_33_60S_70L

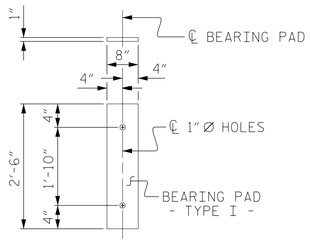

FIXED END
(TYPE I - 66 REQ'D)

ELASTOMERIC BEARING DETAILS

ELASTOMER IN ALL BEARINGS SHALL BE 60 DUROMETER HARDNESS.

BILL OF MATERIAL FOR ONE 70' CORED SLAB UNIT

				EXTERIOR UNIT		INTERIOR UNIT	
BAR	NUMBER	SIZE	TYPE	LENGTH	WEIGHT	LENGTH	WEIGHT
B22	6	#4	STR	24'-6"	98	24'-6"	98
S10	8	#5	3	5'-0"	42	5'-0"	42
S11	170	#4	3	5'-10"	662	5'-10"	662
* S12	79	#5	1	5'-7"	460		
S14	4	#4	4	5'-11"	16	5'-11"	16
S15	4	#5	3	7'-1"	30	7'-1"	30
S16	4	#4	3	5'-11"	16	5'-11"	16
S17	4	#4	3	6'-1"	16	6'-1"	16
S18	4	#4	3	6'-3"	17	6'-3"	17
REINFORCING STEEL			LBS.		897		897
* EPOXY COATED REINFORCING STEEL			LBS.		460		
7000 P.S.I. CONCRETE			CU. YDS.		12.0		12.0
0.6" Ø L.R. STRANDS			No.		28		28

CONCRETE RELEASE STRENGTH

UNIT	PSI
70' UNITS	5500

GRADE 270 STRANDS

	0.6" Ø L.R.
AREA (SQUARE INCHES)	0.217
ULTIMATE STRENGTH (LBS. PER STRAND)	58,600
APPLIED PRESTRESS (LBS. PER STRAND)	43,950

CORED SLABS REQUIRED

	NUMBER	LENGTH	TOTAL LENGTH
70' UNIT			
EXTERIOR C.S.	6	70'-0"	420'-0"
INTERIOR C.S.	27	70'-0"	1890'-0"
TOTAL	33	-	2310'-0"

DEAD LOAD DEFLECTION AND CAMBER

	3'-0" x 2'-0"
70' CORED SLAB UNIT	0.6" Ø L.R. STRAND
CAMBER (SLAB ALONE IN PLACE)	2¼" ↑
DEFLECTION DUE TO SUPERIMPOSED DEAD LOAD**	¾" ↓
FINAL CAMBER	1½" ↑

** INCLUDES FUTURE WEARING SURFACE

BAR TYPES

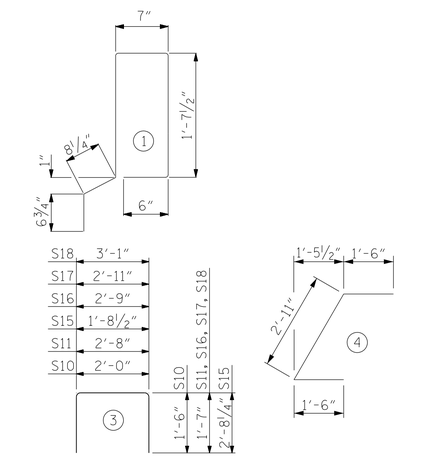

ALL BAR DIMENSIONS ARE OUT TO OUT

NOTES

ALL PRESTRESSING STRANDS SHALL BE 7-WIRE LOW RELAXATION GRADE 270 STRANDS AND SHALL CONFORM TO AASHTO M203 EXCEPT FOR SAMPLING REQUIREMENTS WHICH SHALL BE IN ACCORDANCE WITH THE STANDARD SPECIFICATIONS.

ALL REINFORCING STEEL CAST WITH THE CORED SLAB SECTIONS SHALL BE GRADE 60 AND SHALL BE INCLUDED IN THE UNIT PRICE BID FOR PRESTRESSED CONCRETE CORED SLABS.

RECESSES FOR TRANSVERSE STRANDS SHALL BE GROUTED AFTER THE TENSIONING OF THE STRANDS.

THE 2½" Ø DOWEL HOLES AT FIXED ENDS OF SLAB SECTIONS SHALL BE FILLED WITH NON-SHRINK GROUT.

THE BACKER RODS SHALL CONFORM TO THE REQUIREMENTS OF TYPE M BOND BREAKER. SEE SECTION 1028 OF THE STANDARD SPECIFICATIONS.

WHEN CORED SLABS ARE CAST, AN INTERNAL HOLD-DOWN SYSTEM SHALL BE EMPLOYED TO PREVENT VOIDS FROM RISING OR MOVING SIDEWAYS. AT LEAST SIX WEEKS PRIOR TO CASTING CORED SLABS, THE CONTRACTOR SHALL SUBMIT TO THE ENGINEER FOR REVIEW AND COMMENT, DETAILED DRAWINGS OF THE PROPOSED HOLD-DOWN SYSTEM. IN ADDITION TO STRUCTURAL DETAILS, LOCATION AND SPACING OF THE HOLD-DOWNS SHALL BE INDICATED.

THE TRANSFER OF LOAD FROM THE ANCHORAGES TO THE CORED SLAB UNIT SHALL BE DONE WHEN THE CONCRETE HAS REACHED A COMPRESSIVE STRENGTH OF NOT LESS THAN THE REQUIRED STRENGTH SHOWN IN THE "CONCRETE RELEASE STRENGTH" TABLE.

PRESTRESSING STRANDS SHALL BE CUT FLUSH WITH THE CORED SLAB UNIT ENDS.

APPLY EPOXY PROTECTIVE COATING TO CORED SLAB UNIT ENDS.

FLAME CUTTING OF THE TRANSVERSE POST-TENSIONING STRAND IS NOT ALLOWED.

MAINTAIN A SYMMETRIC TENSION FORCE BETWEEN EACH PAIR OF TRANSVERSE POST TENSIONING STRANDS IN THE DIAPHRAGM.

THE #4 S11 STIRRUPS MAY BE SHIFTED AS NECESSARY TO MAINTAIN 1" CLEAR TO THE GROUTED RECESS.

FOR GROUT FOR STRUCTURES, SEE SPECIAL PROVISIONS.

THE PERMITTED THREADED INSERTS ARE DETAILED AS AN OPTION FOR THE CONTRACTOR TO ATTACH FALSEWORK AND FORMWORK DURING CONSTRUCTION.

THE PERMITTED THREADED INSERTS IN THE EXTERIOR UNITS SHALL BE SIZED BY THE CONTRACTOR, SPACED AT 4'-0" CENTERS AND GALVANIZED IN ACCORDANCE WITH SECTION 1076 OF THE STANDARD SPECIFICATIONS. STAINLESS STEEL THREADED INSERTS MAY BE USED AS AN ALTERNATE.

THE PERMITTED THREADED INSERTS SHALL BE GROUTED BY THE CONTRACTOR IMMEDIATELY FOLLOWING REMOVAL OF THE FALSEWORK.

THE COST OF THE PERMITTED THREADED INSERTS SHALL BE INCLUDED IN THE PRICE BID FOR THE PRECAST UNITS.

PROJECT NO. B-5145
PERSON COUNTY
STATION: 14+50.00 -L-

SHEET 5 OF 6

NORTH CAROLINA PROFESSIONAL SEAL 041425 ENGINEER JEFFREY M. LOFTUS

DocuSigned by: Jeff Loftus 5/9/2018

DOCUMENT NOT CONSIDERED FINAL UNLESS ALL SIGNATURES COMPLETED

STEWART
Firm License No. C-1051
421 Fayetteville St,
Suite 400
Raleigh, NC 27601
T 919.380.8750
www.stewartinc.com

STATE OF NORTH CAROLINA
DEPARTMENT OF TRANSPORTATION
RALEIGH

STANDARD
3'-0" X 2'-0"
PRESTRESSED CONCRETE
CORED SLAB UNIT

REVISIONS						SHEET NO.
NO.	BY:	DATE:	NO.	BY:	DATE:	S-9
1			3			TOTAL SHEETS
2			4			22

STD. NO. 24PCS3_33_60&120S

DRAWN BY: J. LOFTUS DATE: 6/17
CHECKED BY: E. PHELPS DATE: 9/17
DESIGN ENGINEER OF RECORD: J. LOFTUS DATE: 10/17

R 2707C_SITE 3
4/17/2018
...\400_009_B5145_SMU_SUP05.dgn
USER:jloftus

$$$$$$$SYSTIME$$$$$
$$$$$$$$$$$$$$$$$$$$$DGN$$$$$$$$$$$$$$$$$$$$$$$
$$$$USERNAME$$$$

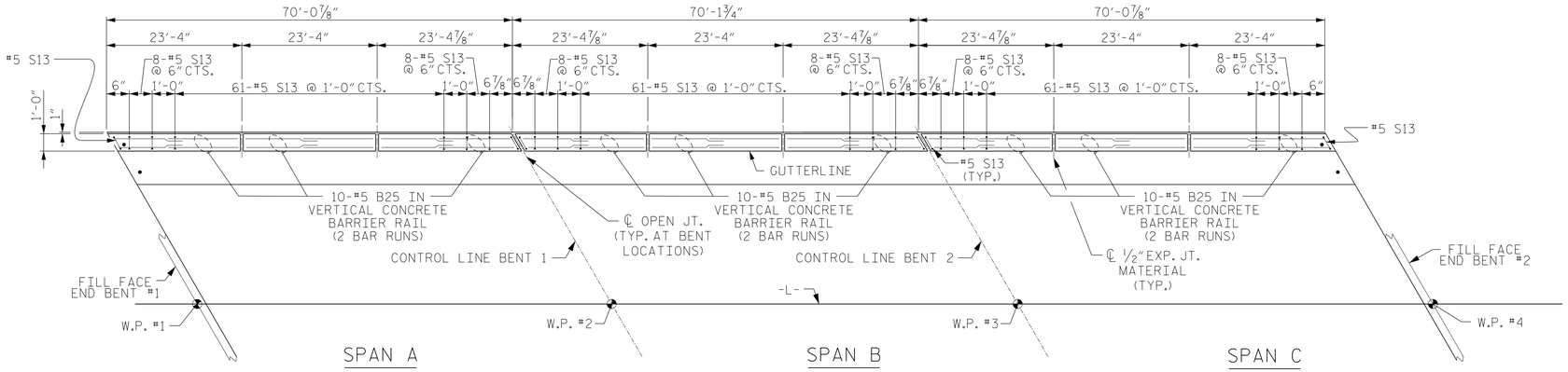

PLAN OF PARAPET

LEFT PARAPET SHOWN, RIGHT PARAPET SIMILAR
S13 BARS SHOULD BE SPACED TO MATCH S12 BARS IN EXTERIOR CORED SLAB UNITS

CONTROL LINE BENT 2

NOTES

ALL REINFORCING STEEL IN VERTICAL CONCRETE BARRIER RAILS SHALL BE EPOXY COATED.

GROOVED CONTRACTION JOINTS, 1/2" IN DEPTH, SHALL BE TOOLED IN ALL EXPOSED FACES OF THE BARRIER RAIL AND IN ACCORDANCE WITH ARTICLE 825-10(B) OF THE STANDARD SPECIFICATIONS. A CONTRACTION JOINT SHALL BE LOCATED AT EACH THIRD POINT BETWEEN BARRIER RAIL EXPANSION JOINTS. ONLY ONE CONTRACTION JOINT IS REQUIRED AT MIDPOINT OF BARRIER RAIL SEGMENTS LESS THAN 20 FEET IN LENGTH AND NO CONTRACTION JOINTS ARE REQUIRED FOR THOSE SEGMENTS LESS THAN 10 FEET IN LENGTH.

BAR TYPES

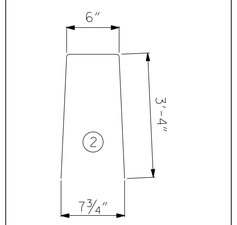

ALL BAR DIMENSIONS ARE OUT TO OUT

BILL OF MATERIAL FOR VERTICAL CONCRETE BARRIER RAIL

BAR	BARS PER PAIR OF EXTERIOR UNITS	TOTAL NO.	SIZE	TYPE	LENGTH	WEIGHT
	70' UNIT					
*B25	120	360	#5	STR	13'-8"	5132
*S13	158	474	#5	2	7'-2"	3543
* EPOXY COATED REINFORCING STEEL				LBS.		8675
CLASS AA CONCRETE				CU.YDS.		54.3
TOTAL VERTICAL CONCRETE BARRIER RAIL				LN. FT.		420.87

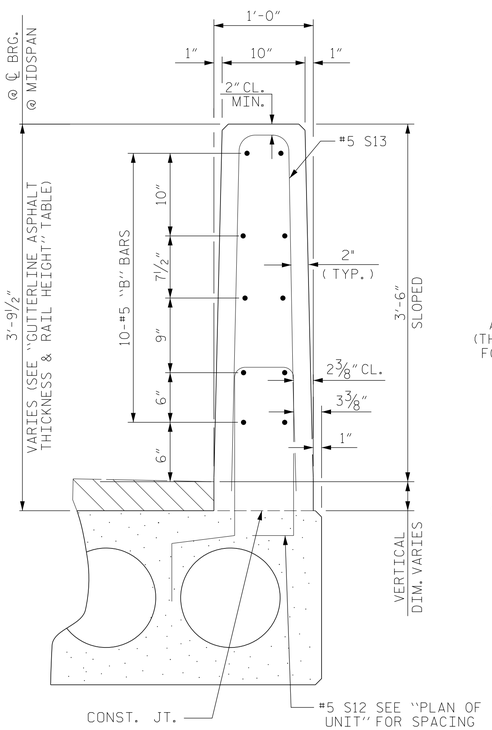

SECTION THRU RAIL

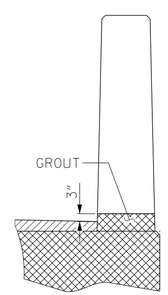

SECTION T-T
AT OPEN JOINT AT BENT
(THIS IS TO BE USED WHERE FOAM JOINT IS NOT USED)

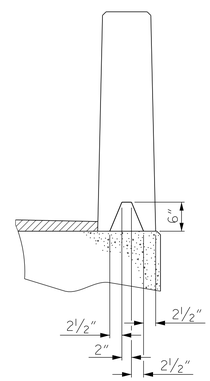

SECTION S-S
AT DAM IN OPEN JOINT
(THIS IS TO BE USED ONLY WHEN SLIP FORM IS USED)

GUTTERLINE ASPHALT THICKNESS & RAIL HEIGHT

	ASPHALT OVERLAY THICKNESS @ MID-SPAN	RAIL HEIGHT @ MID-SPAN
70' UNITS	2"	3'-8"

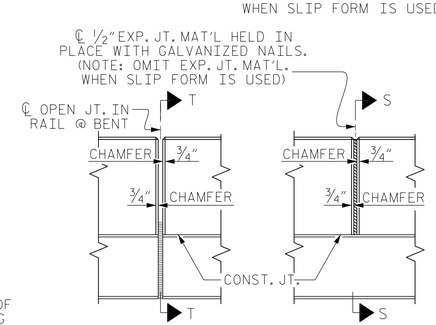

ELEVATION AT EXPANSION JOINTS

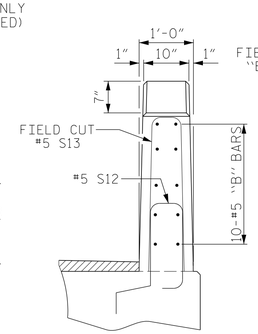

END VIEW

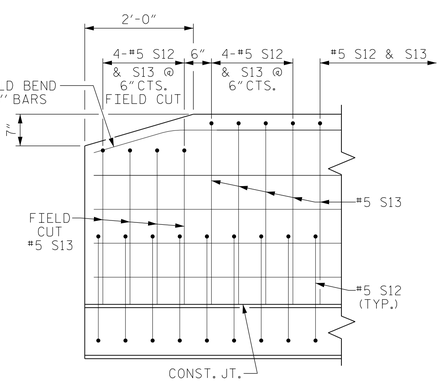

SIDE VIEW

VERTICAL CONCRETE BARRIER RAIL DETAILS

END OF RAIL DETAILS

PROJECT NO. B-5145
PERSON COUNTY
STATION: 14+50.00 -L-

SHEET 6 OF 6

STATE OF NORTH CAROLINA
DEPARTMENT OF TRANSPORTATION
RALEIGH

VERTICAL CONCRETE BARRIER RAIL DETAILS

NORTH CAROLINA PROFESSIONAL SEAL 041425 ENGINEER JEFFREY M. LOFTUS

DocuSigned by: Jeff Loftus 5/9/2018

DOCUMENT NOT CONSIDERED FINAL UNLESS ALL SIGNATURES COMPLETED

STEWART
Firm License No. C-1051
421 Fayetteville St, Suite 400
Raleigh, NC 27601
T 919.380.8750
www.stewartinc.com

REVISIONS								SHEET NO.
NO.	BY:	DATE:	NO.	BY:	DATE:			S-10
1			3					TOTAL SHEETS
2			4					22

DRAWN BY:	J. LOFTUS	DATE :	6/17
CHECKED BY:	E. PHELPS	DATE :	9/17
DESIGN ENGINEER OF RECORD:	J. LOFTUS	DATE :	10/17

R 2707C_SITE 3

4/17/2018
...\400_010_B5145_SMU_SUP06.dgn
USER:jloftus

$$$$$$SYSTIME$$$$$
$$$$$$$$$$$$$$$$$$$$$$DGN$$$$$$$$$$$$$$$$$$$$$$
$$$$USERNAME$$$$

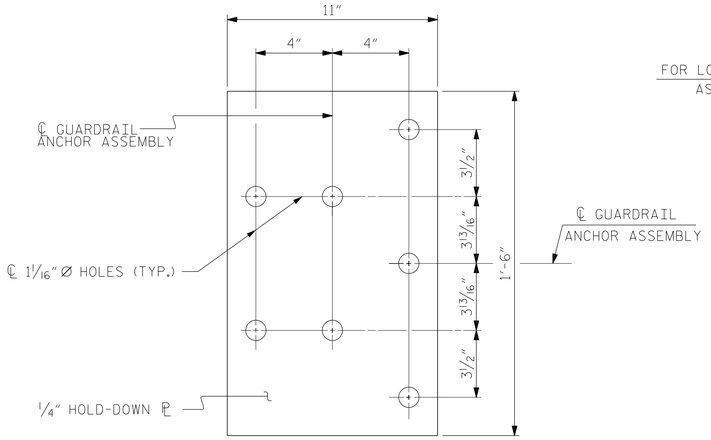

PLAN

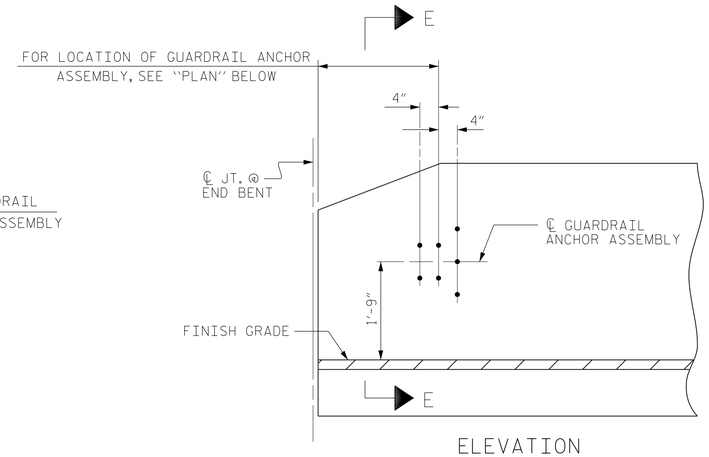

ELEVATION

NOTES

THE GUARDRAIL ANCHOR ASSEMBLY SHALL CONSIST OF A 1/4" HOLD DOWN PLATE AND 7 - 7/8" Ø BOLTS WITH NUTS AND WASHERS.

THE HOLD-DOWN PLATE SHALL CONFORM TO AASHTO M270 GRADE 36. AFTER FABRICATION, THE HOLD-DOWN PLATE SHALL BE HOT-DIP GALVANIZED IN ACCORDANCE WITH AASHTO M111.

BOLTS SHALL CONFORM TO THE REQUIREMENTS OF ASTM A307 AND NUTS SHALL CONFORM TO THE REQUIREMENTS OF AASHTO M291. BOLTS, NUTS AND WASHERS SHALL BE GALVANIZED. (AT THE CONTRACTOR'S OPTION, STAINLESS STEEL BOLTS, NUTS AND WASHERS MAY BE USED AS AN ALTERNATE FOR THE 7/8" Ø GALVANIZED BOLTS, NUTS AND WASHERS. THEY SHALL CONFORM TO OR EXCEED THE MECHANICAL REQUIREMENTS OF ASTM A307. THE USE OF THIS ALTERNATE SHALL BE APPROVED BY THE ENGINEER.)

THE GUARDRAIL ANCHOR ASSEMBLY IS REQUIRED AT ALL POINTS WHERE APPROACH GUARDRAIL IS TO BE ATTACHED TO THE END OF BARRIER RAIL. FOR POINTS OF ATTACHMENT, SEE SKETCH.

AFTER INSTALLATION, THE EXPOSED THREAD OF THE BOLT SHALL BE BURRED WITH A SHARP POINTED TOOL.

THE COST OF THE GUARDRAIL ANCHOR ASSEMBLY SHALL BE INCLUDED IN THE UNIT CONTRACT PRICE BID FOR VERTICAL CONCRETE BARRIER RAIL.

THE VERTICAL REINFORCING BARS MAY BE SHIFTED SLIGHTLY IN THE VERTICAL CONCRETE BARRIER RAIL TO CLEAR ASSEMBLY BOLTS.

THE 1 1/4" Ø HOLES SHALL BE FORMED OR DRILLED WITH A CORE BIT. IMPACT TOOLS WILL NOT BE PERMITTED. ANY CONCRETE DAMAGED BY THIS WORK SHALL BE REPAIRED TO THE SATISFACTION OF THE ENGINEER.

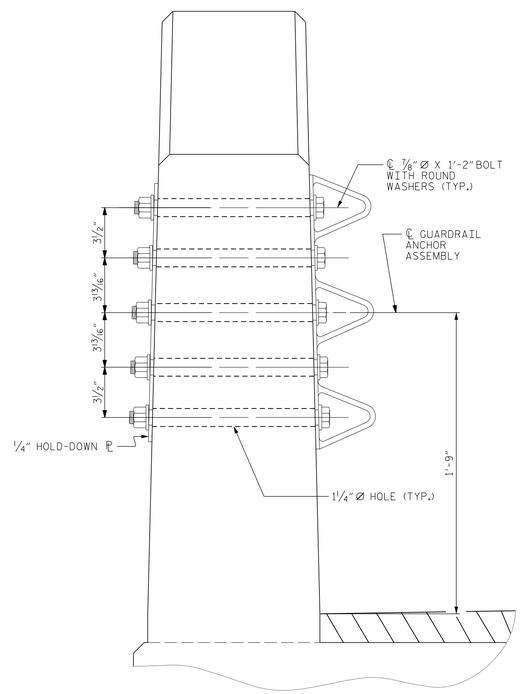

SECTION E-E

GUARDRAIL ANCHOR ASSEMBLY DETAILS

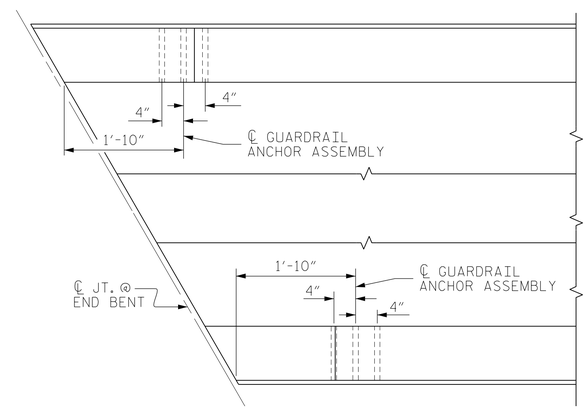

PLAN

LOCATION OF ANCHORS FOR GUARDRAIL

END BENT #1 SHOWN, END BENT #2 SIMILAR.

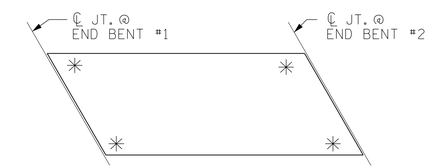

SKETCH SHOWING POINTS OF ATTACHMENT

✳ DENOTES GUARDRAIL ANCHOR ASSEMBLY

PROJECT NO. B-5145

PERSON COUNTY

STATION: 14+50.00 -L-

DocuSigned by: David Ruggles C462768DF412422...
5/21/2018

NORTH CAROLINA PROFESSIONAL SEAL 11725 ENGINEER DAVID R. RUGGLES

DOCUMENT NOT CONSIDERED FINAL UNLESS ALL SIGNATURES COMPLETED

STEWART

Firm License No. C-1051
421 Fayetteville St,
Suite 400
Raleigh, NC 27601
T 919.380.8750
www.stewartinc.com

STATE OF NORTH CAROLINA
DEPARTMENT OF TRANSPORTATION
RALEIGH

STANDARD
GUARDRAIL ANCHORAGE DETAILS
FOR VERTICAL CONCRETE BARRIER RAIL

REVISIONS						SHEET NO.
NO.	BY:	DATE:	NO.	BY:	DATE:	S-11
1			3			TOTAL SHEETS
2			4			22

(SHT 1b) STD. NO. GRA3

DRAWN BY:	J. LOFTUS	DATE :	6/17
CHECKED BY:	E. PHELPS	DATE :	9/17
DESIGN ENGINEER OF RECORD:	J. LOFTUS	DATE :	10/17

B-5145

5/21/2018
...\400_011_B5145_SMU_GRA01.dgn
USER:ephelps

NOTES

STIRRUPS IN CAP MAY BE SHIFTED AS NECESSARY TO CLEAR DOWELS.

THE CONCRETE IN THE SHADED AREA OF THE WING SHALL BE POURED AFTER THE VERTICAL CONCRETE BARRIER RAIL IS CAST IF SLIP FORMING IS USED.

FOR PILE SPLICE DETAILS, SEE SHEET 4 OF 8.

FOR WING DETAILS, SEE SHEET 3 OF 8.

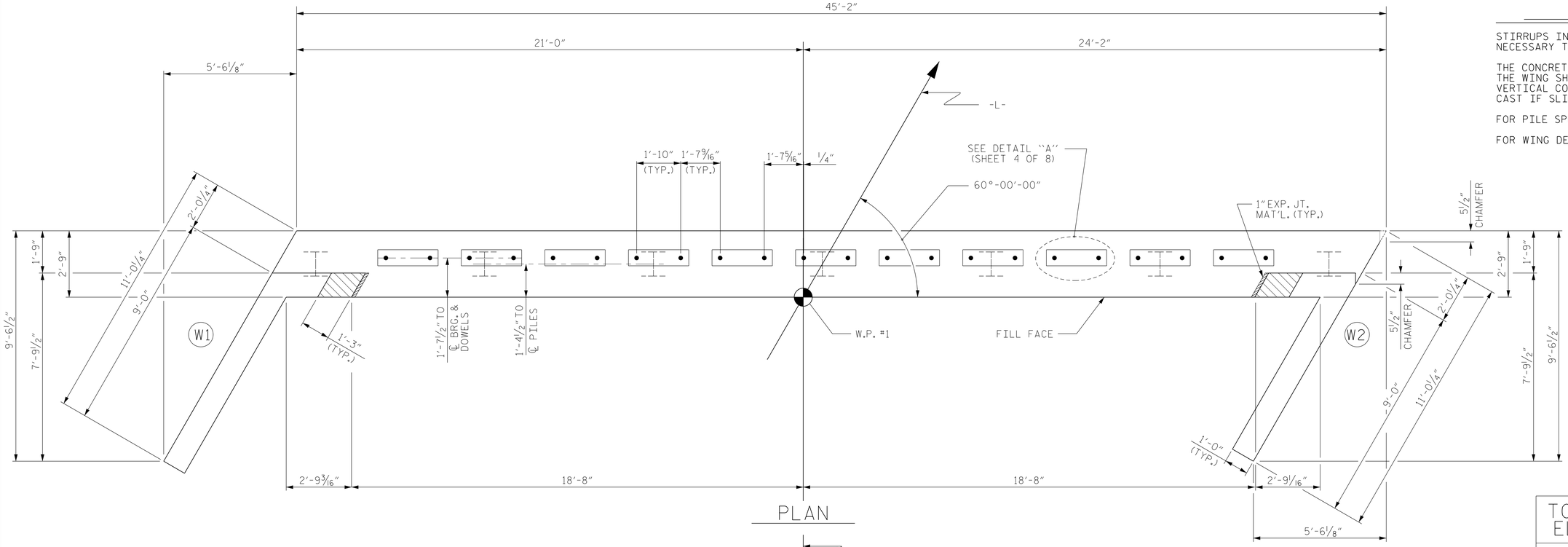

PLAN

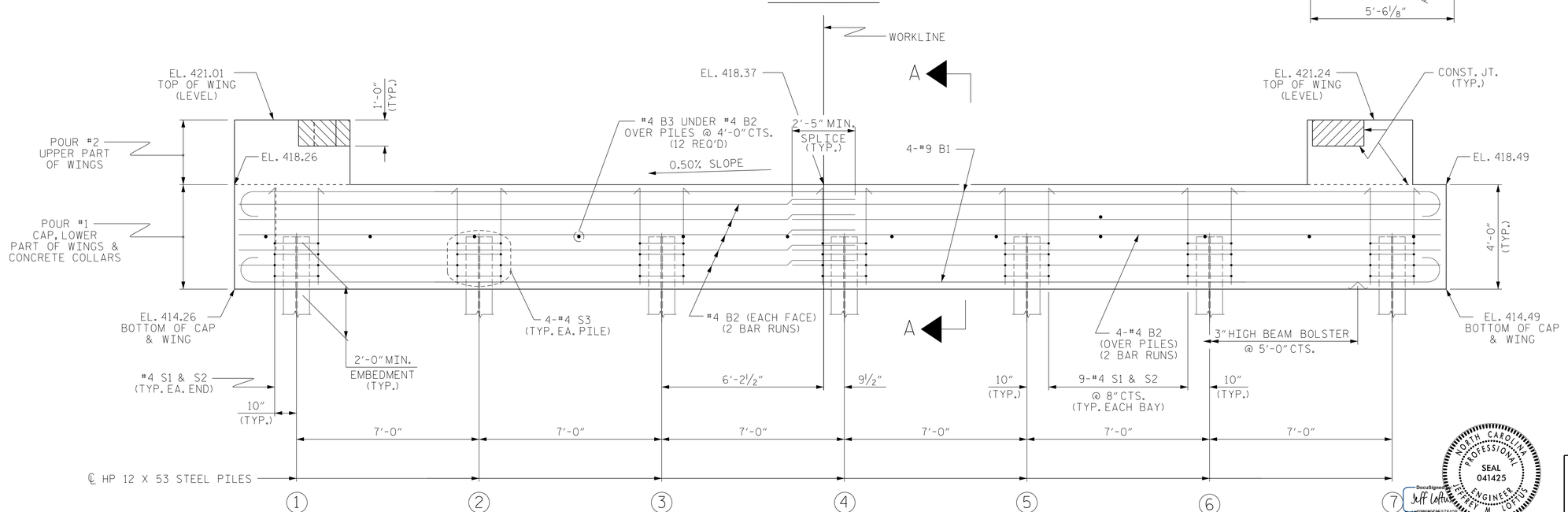

ELEVATION

WINGS NOT SHOWN FOR CLARITY.
FOR SECTION A-A, SEE SHEET 4 OF 8.
CONCRETE COLLARS FOR STEEL PILES NOT SHOWN IN PLAN AND ELEVATION VIEWS FOR CLARITY.
SEE "CORROSION PROTECTION FOR STEEL PILES DETAIL", SHEET 4 OF 8.

TOP OF PILE ELEVATIONS	
1	416.27
2	416.31
3	416.34
4	416.38
5	416.41
6	416.45
7	416.48

0.50% SLOPE

PROJECT NO. B-5145
PERSON COUNTY
STATION: 14+50.00 -L-

SHEET 1 OF 8

NORTH CAROLINA PROFESSIONAL SEAL 041425 ENGINEER JEFFREY M. LOFTUS

DocuSigned by: Jeff Loftus 5/9/2018

DOCUMENT NOT CONSIDERED FINAL UNLESS ALL SIGNATURES COMPLETED

STEWART
Firm License No. C-1051
421 Fayetteville St,
Suite 400
Raleigh, NC 27601
T 919.380.8750
www.stewartinc.com

STATE OF NORTH CAROLINA
DEPARTMENT OF TRANSPORTATION
RALEIGH

SUBSTRUCTURE

END BENT No. 1

REVISIONS						SHEET NO.
NO.	BY:	DATE:	NO.	BY:	DATE:	S-12
1			3			TOTAL SHEETS
2			4			22

DRAWN BY:	J. LOFTUS	DATE :	6/17
CHECKED BY:	E. PHELPS	DATE :	9/17
DESIGN ENGINEER OF RECORD:	J. LOFTUS	DATE :	10/17

4/17/2018
...\400_012_B5145_SMU_SUB01.dgn
USER:jloftus

R 2707C_SITE 3

STD. NO. EB_33_60S4

NOTES

STIRRUPS IN CAP MAY BE SHIFTED AS NECESSARY TO CLEAR DOWELS.

THE CONCRETE IN THE SHADED AREA OF THE WING SHALL BE POURED AFTER THE VERTICAL CONCRETE BARRIER RAIL IS CAST IF SLIP FORMING IS USED.

FOR PILE SPLICE DETAILS, SEE SHEET 4 OF 8.

FOR WING DETAILS, SEE SHEET 3 OF 8.

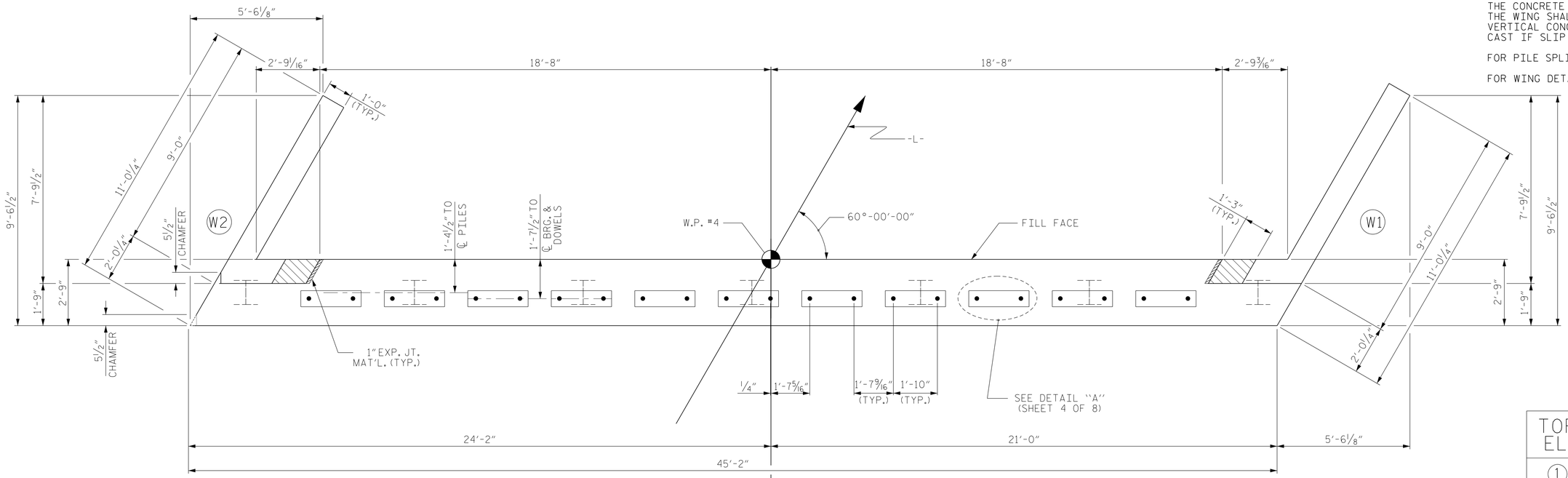

PLAN

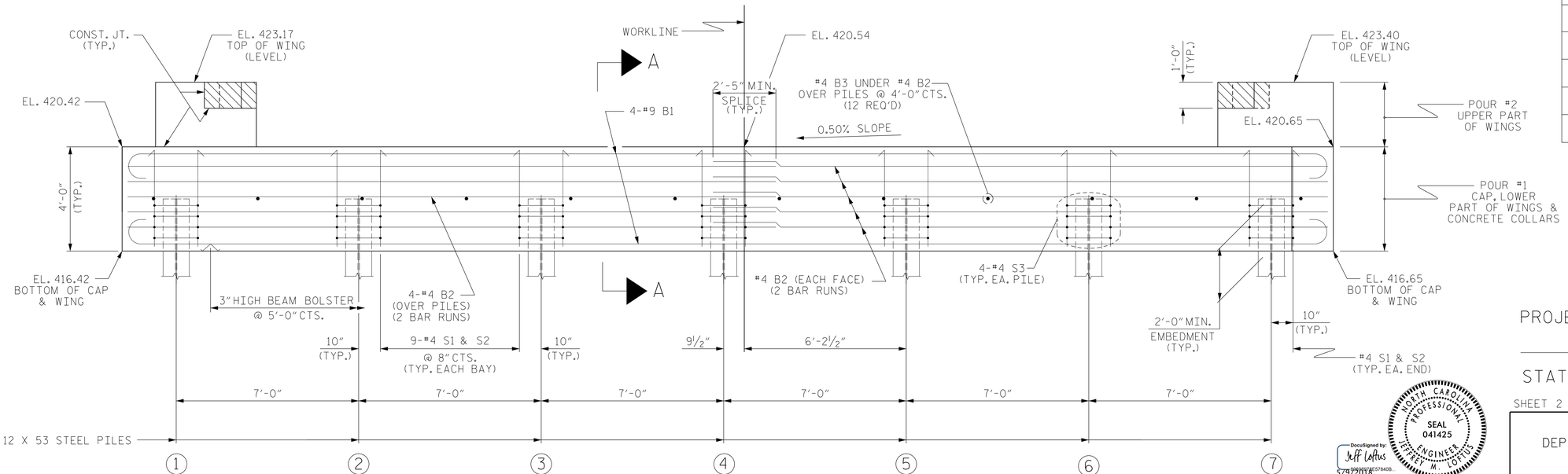

ELEVATION

WINGS NOT SHOWN FOR CLARITY.
FOR SECTION A-A, SEE SHEET 4 OF 8.
CONCRETE COLLARS FOR STEEL PILES NOT SHOWN IN PLAN AND ELEVATION VIEWS FOR CLARITY.
SEE "CORROSION PROTECTION FOR STEEL PILES DETAIL", SHEET 4 OF 8.

TOP OF PILE ELEVATIONS	
1	418.43
2	418.47
3	418.50
4	418.54
5	418.57
6	418.61
7	418.64

0.50% SLOPE

PROJECT NO. B-5145

PERSON COUNTY

STATION: 14+50.00 -L-

SHEET 2 OF 8

NORTH CAROLINA PROFESSIONAL SEAL 041425 ENGINEER JEFFREY M. LOFTUS

DocuSigned by: Jeff Loftus 5/9/2018

DOCUMENT NOT CONSIDERED FINAL UNLESS ALL SIGNATURES COMPLETED

STATE OF NORTH CAROLINA
DEPARTMENT OF TRANSPORTATION
RALEIGH

SUBSTRUCTURE

END BENT No. 2

STEWART
Firm License No. C-1051
421 Fayetteville St,
Suite 400
Raleigh, NC 27601
T 919.380.8750
www.stewartinc.com

REVISIONS								SHEET NO.
NO.	BY:	DATE:	NO.	BY:	DATE:			S-13
1			3					TOTAL SHEETS
2			4					22

DRAWN BY:	J. LOFTUS	DATE :	6/17
CHECKED BY:	E. PHELPS	DATE :	9/17
DESIGN ENGINEER OF RECORD:	J. LOFTUS	DATE :	10/17

4/17/2018
...\400_013_B5145_SMU_SUB02.dgn
USER:jloftus

R 2707C_SITE 3

STD. NO. EB_33_60S4

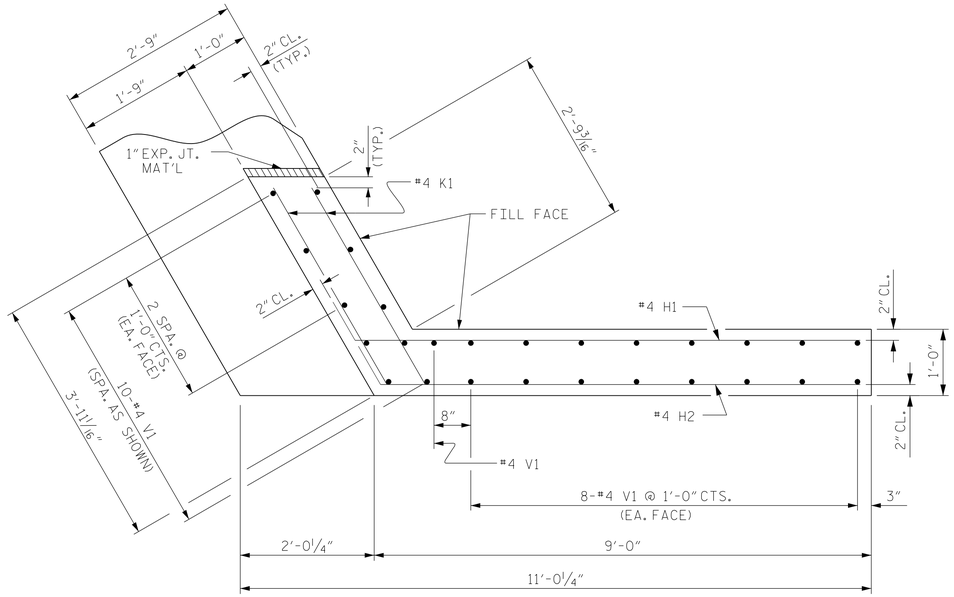

PLAN OF WING (W1)

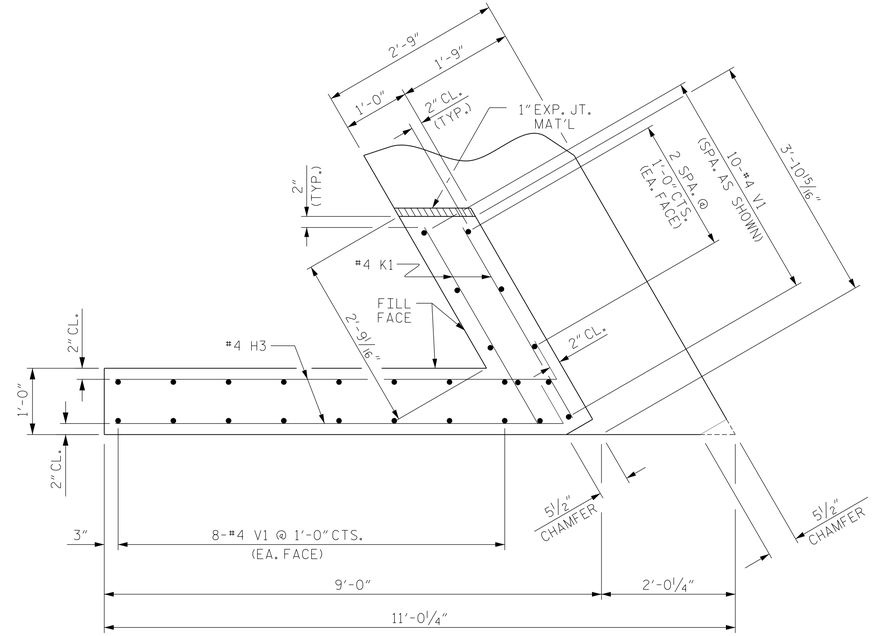

PLAN OF WING (W2)

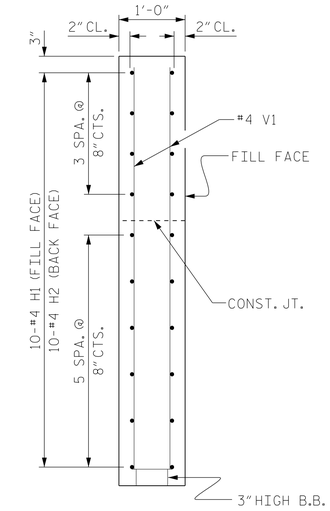

SECTION X-X

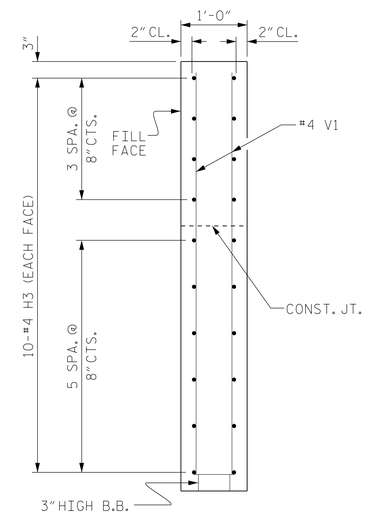

SECTION Y-Y

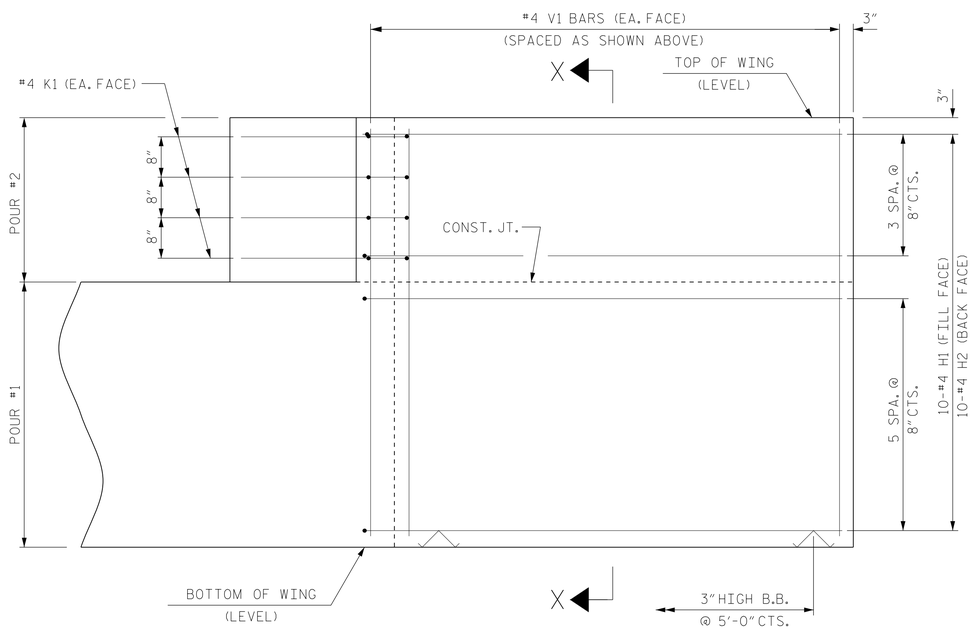

ELEVATION OF WING (W1)

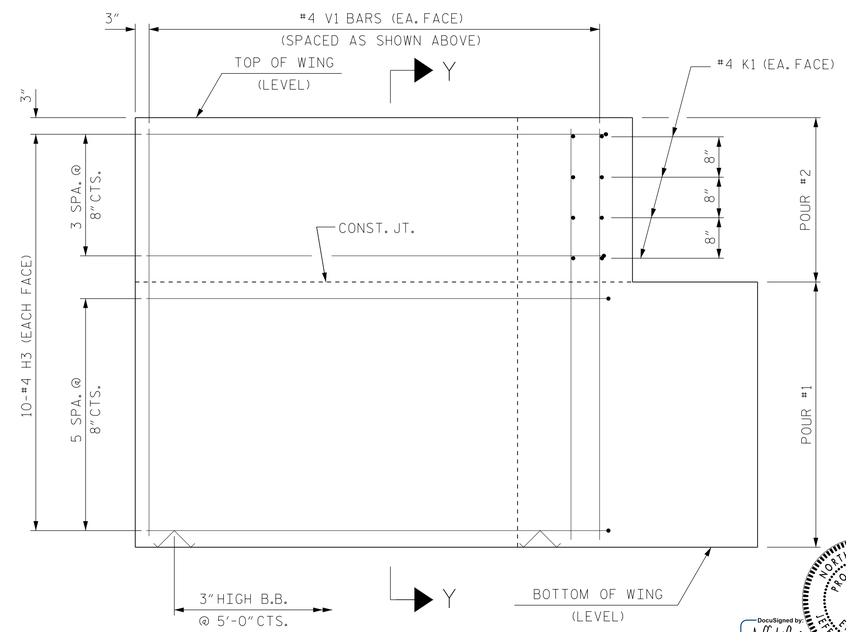

ELEVATION OF WING (W2)

WING DETAILS

PROJECT NO. B-5145

PERSON COUNTY

STATION: 14+50.00 -L-

SHEET 3 OF 8

NORTH CAROLINA PROFESSIONAL SEAL 041425 ENGINEER JEFFREY M. LOFTUS

DocuSigned by: Jeff Loftus 5/9/2018

DOCUMENT NOT CONSIDERED FINAL UNLESS ALL SIGNATURES COMPLETED

STATE OF NORTH CAROLINA
DEPARTMENT OF TRANSPORTATION
RALEIGH

SUBSTRUCTURE
END BENT
WING DETAILS

STEWART

Firm License No. C-1051
421 Fayetteville St,
Suite 400
Raleigh, NC 27601
T 919.380.8750
www.stewartinc.com

REVISIONS								SHEET NO.
NO.	BY:	DATE:	NO.	BY:	DATE:			S-14
1			3					TOTAL SHEETS
2			4					22

DRAWN BY:	J. LOFTUS	DATE :	6/17
CHECKED BY:	E. PHELPS	DATE :	9/17
DESIGN ENGINEER OF RECORD:	J. LOFTUS	DATE :	10/17

STD. NO. EB_33_60S4

R 2707C_SITE 3

4/17/2018
...\400_014_B5145_SMU_SUB03.dgn
USER:jloftus

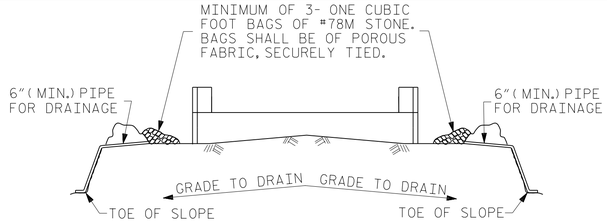

BAGGED STONE AND PIPE SHALL BE PLACED IMMEDIATELY AFTER COMPLETION OF END BENT EXCAVATION. PIPE MAY BE EITHER CONCRETE, CORRUGATED STEEL, CORRUGATED ALUMINUM ALLOY, OR CORRUGATED PLASTIC. PERFORATED PIPE WILL NOT BE ALLOWED.

BAGGED STONE SHALL REMAIN IN PLACE UNTIL THE ENGINEER DIRECTS THAT IT BE REMOVED. THE CONTRACTOR SHALL REMOVE AND DISPOSE OF SILT ACCUMULATIONS AT BAGGED STONE WHEN SO DIRECTED BY THE ENGINEER. BAGS SHALL BE REMOVED AND REPLACED WHENEVER THE ENGINEER DETERMINES THAT THEY HAVE DETERIORATED AND LOST THEIR EFFECTIVENESS.

NO SEPARATE PAYMENT WILL BE MADE FOR THIS WORK AND THE ENTIRE COST OF THIS WORK SHALL BE INCLUDED IN THE UNIT CONTRACT PRICE BID FOR THE SEVERAL PAY ITEMS.

TEMPORARY DRAINAGE AT END BENT

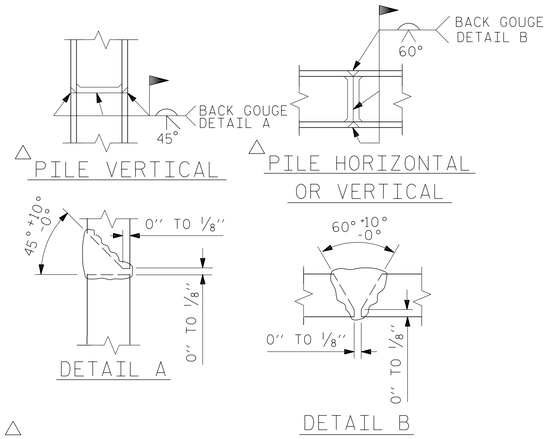

△ POSITION OF PILE DURING WELDING.

PILE SPLICE DETAILS

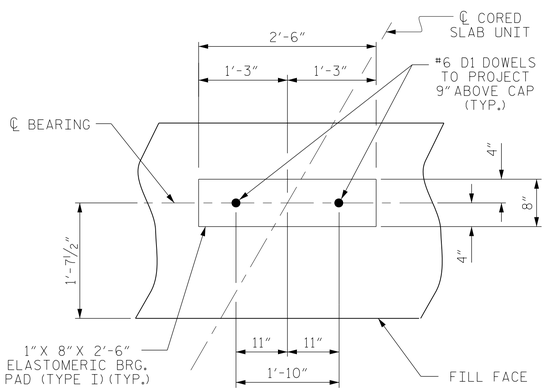

DETAIL "A"

(END BENT No. 1 SHOWN, END BENT No. 2 SIMILAR BY ROTATION)

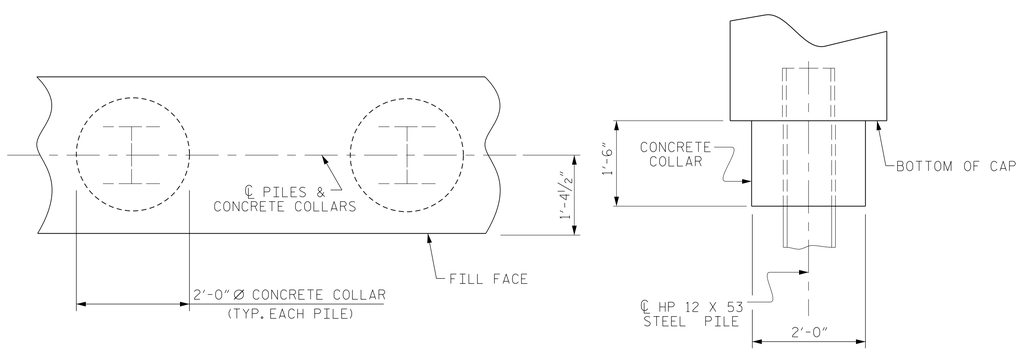

PLAN

ELEVATION

CORROSION PROTECTION FOR STEEL PILES DETAIL

(END BENT No. 1 SHOWN, END BENT No. 2 SIMILAR BY ROTATION)

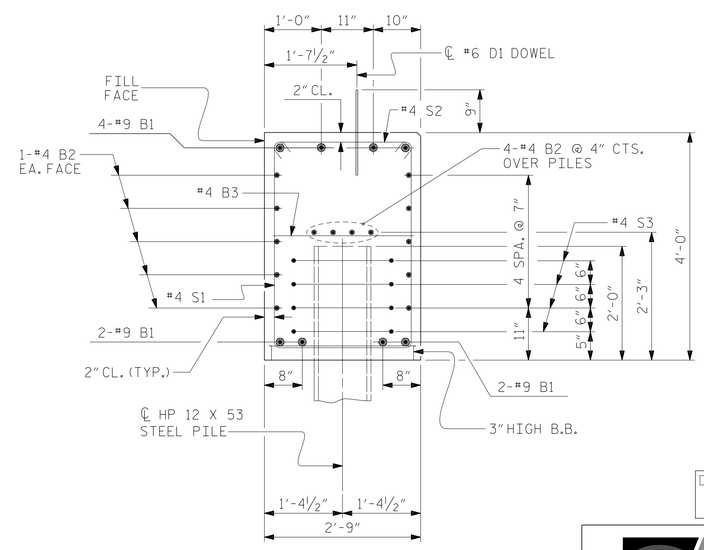

SECTION A-A

(CONCRETE COLLAR NOT SHOWN FOR CLARITY. SEE "CORROSION PROTECTION FOR STEEL PILES DETAIL.")

BAR TYPES

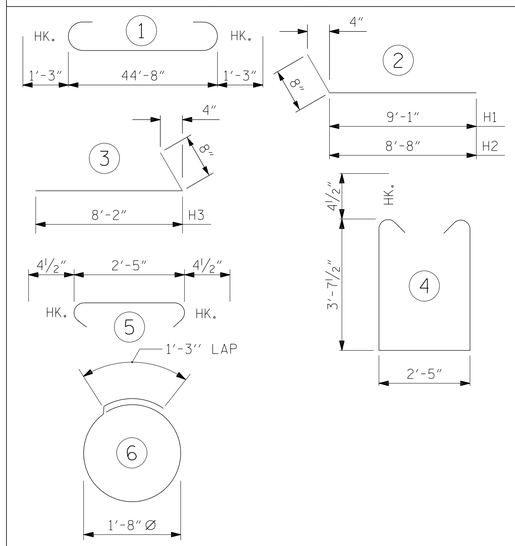

ALL BAR DIMENSIONS ARE OUT TO OUT.

END BENT No. 1	END BENT No. 2
HP 12 X 53 STEEL PILES NO: 7 LIN. FT.= 265	HP 12 X 53 STEEL PILES NO: 7 LIN. FT.= 140
PILE DRIVING EQUIPMENT SETUP FOR HP 12 X 53 STEEL PILES NO: 7	PILE DRIVING EQUIPMENT SETUP FOR HP 12 X 53 STEEL PILES NO: 7

BILL OF MATERIAL FOR ONE END BENT

BAR	NO.	SIZE	TYPE	LENGTH	WEIGHT
B1	8	#9	1	47'-2"	1283
B2	28	#4	STR	23'-8"	443
B3	12	#4	STR	2'-5"	19
D1	22	#6	STR	1'-6"	50
H1	10	#4	2	9'-9"	65
H2	10	#4	2	9'-4"	62
H3	20	#4	3	8'-10"	118
K1	16	#4	STR	3'-3"	35
S1	56	#4	4	10'-5"	390
S2	56	#4	5	3'-2"	118
S3	28	#4	6	6'-6"	122
V1	53	#4	STR	6'-4"	224

REINFORCING STEEL (FOR ONE END BENT) 2929 LBS.

CLASS A CONCRETE BREAKDOWN (FOR ONE END BENT)

POUR #1 CAP, LOWER PART OF WINGS & COLLARS 21.9 C.Y.

POUR #2 UPPER PART OF WINGS 2.4 C.Y.

TOTAL CLASS A CONCRETE 24.3 C.Y.

PROJECT NO. B-5145

PERSON COUNTY

STATION: 14+50.00 -L-

SHEET 4 OF 8

STATE OF NORTH CAROLINA
DEPARTMENT OF TRANSPORTATION
RALEIGH

SUBSTRUCTURE

END BENT No. 1 & 2 DETAILS

NORTH CAROLINA PROFESSIONAL SEAL 041425 ENGINEER JEFFREY M. LOFTUS

DocuSigned by: Jeff Loftus 5/9/2018

DOCUMENT NOT CONSIDERED FINAL UNLESS ALL SIGNATURES COMPLETED

STEWART

Firm License No. C-1051
421 Fayetteville St,
Suite 400
Raleigh, NC 27601
T 919.380.8750
www.stewartinc.com

REVISIONS							SHEET NO.
NO.	BY:	DATE:	NO.	BY:	DATE:		S-15
1			3				TOTAL SHEETS
2			4				22

DRAWN BY:	J. LOFTUS	DATE :	6/17
CHECKED BY:	E. PHELPS	DATE :	9/17
DESIGN ENGINEER OF RECORD:	J. LOFTUS	DATE :	10/17

STD. NO. EB_33_60S4

R 2707C_SITE 3

4/17/2018
...\400_015_B5145_SMU_SUB04.dgn
USER:jloftus

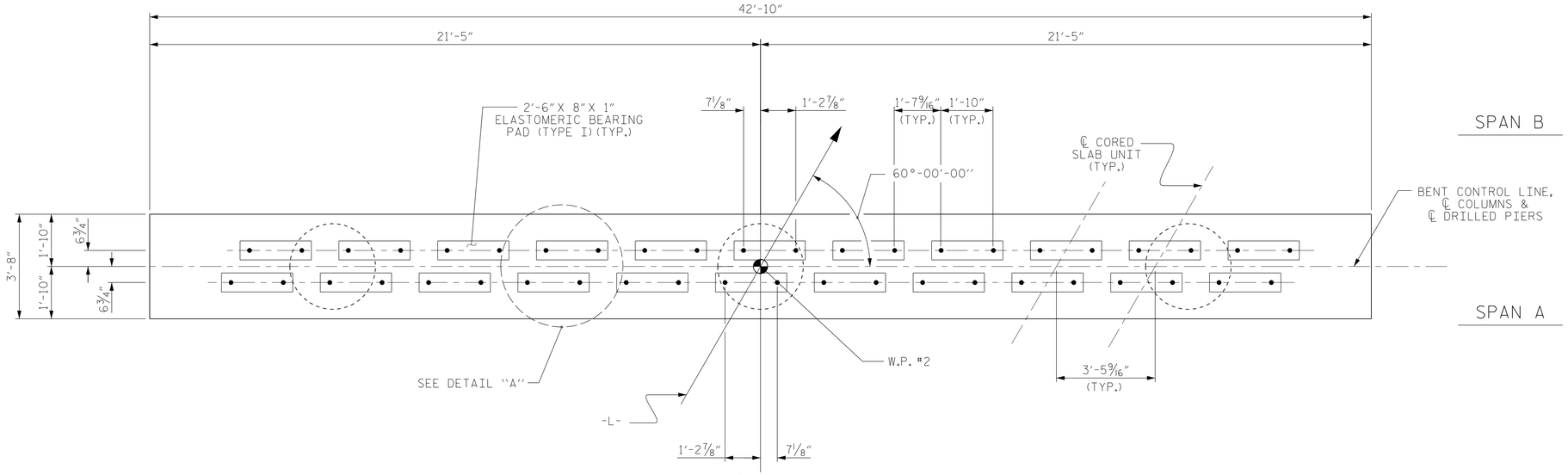

PLAN

NOTES

STIRRUPS IN CAP MAY BE SHIFTED AS NECESSARY TO CLEAR DOWELS.

HOOKS ON "M" BARS MAY BE TURNED AS NECESSARY FOR PLACING REINFORCING STEEL.

SPLICING OF THE LONGITUDINAL BARS IN THE DRILLED PIER WILL NOT BE PERMITTED.

FOR DRILLED PIERS, SEE SECTION 411 OF THE STANDARD SPECIFICATIONS.

ALL STEEL IN THE DRILLED PIERS IS INCLUDED IN THE PAY ITEMS FOR "REINFORCING STEEL" AND "SPIRAL COLUMN REINFORCING STEEL."

★ INVERT ALTERNATE STIRRUPS.

DRILLED PIERS SHALL BE TERMINATED ONE FOOT ± ABOVE NORMAL WATER SURFACE ELEVATION FOR SHAFTS LOCATED IN WATER.

THE CONTRACTOR'S ATTENTION IS CALLED TO THE FACT THAT THE LONGITUDINAL REINFORCEMENT FOR DRILLED PIERS IS DETAILED WITH 3 FEET OF EXTRA LENGTH.

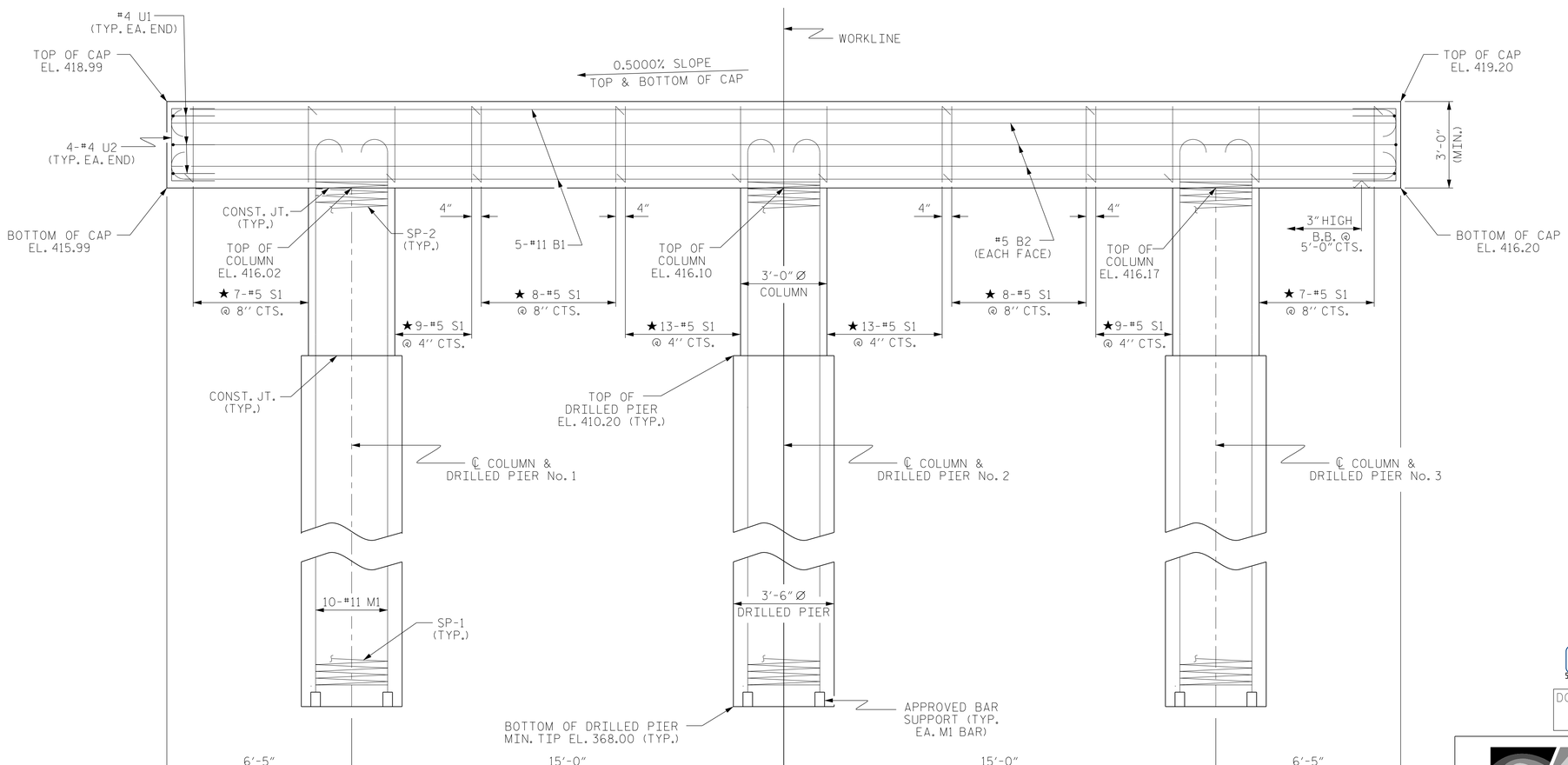

ELEVATION

DIMENSIONS & REINFORCING STEEL ARE TYPICAL FOR EACH COLUMN & DRILLED PIER UNLESS OTHERWISE NOTED.

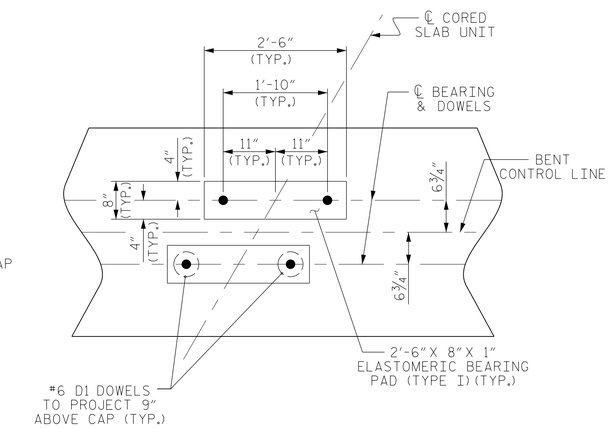

DETAIL "A"

(DIMENSIONS ARE TYPICAL EACH BEARING)

PROJECT NO. B-5145

PERSON COUNTY

STATION: 14+50.00 -L-

SHEET 5 OF 8

STATE OF NORTH CAROLINA
DEPARTMENT OF TRANSPORTATION
RALEIGH

SUBSTRUCTURE
BENT No. 1

NORTH CAROLINA PROFESSIONAL SEAL 041425 ENGINEER JEFFREY M. LOFTUS

DocuSigned by: Jeff Loftus
5/9/2018

DOCUMENT NOT CONSIDERED FINAL UNLESS ALL SIGNATURES COMPLETED

STEWART
Firm License No. C-1051
421 Fayetteville St,
Suite 400
Raleigh, NC 27601
T 919.380.8750
www.stewartinc.com

REVISIONS						SHEET NO.
NO.	BY:	DATE:	NO.	BY:	DATE:	S-16
1			3			TOTAL SHEETS
2			4			22

DRAWN BY:	J. LOFTUS	DATE :	6/17
CHECKED BY:	E. PHELPS	DATE :	9/17
DESIGN ENGINEER OF RECORD:	J. LOFTUS	DATE :	10/17

R 2707C_SITE 3

4/17/2018
...\400_016_B5145_SMU_SUB05.dgn
USER:jloftus

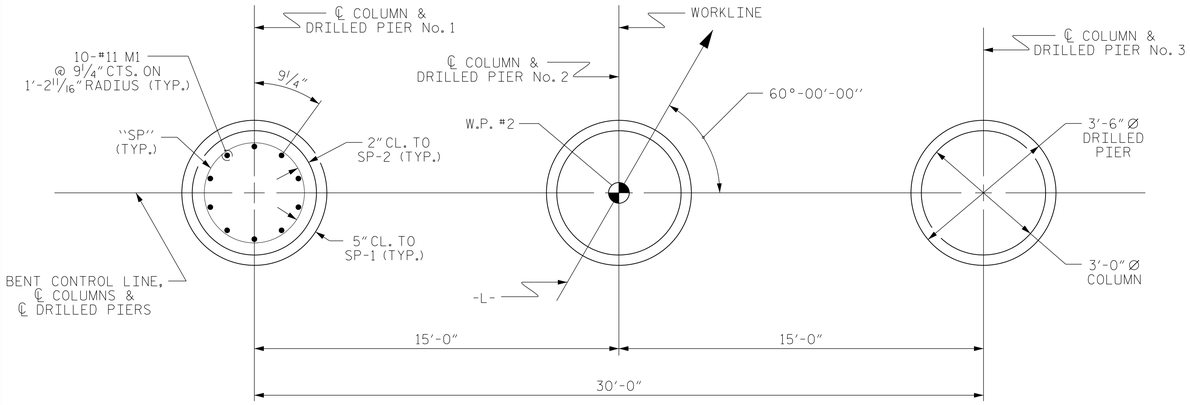

PLAN OF DRILLED PIERS & COLUMNS

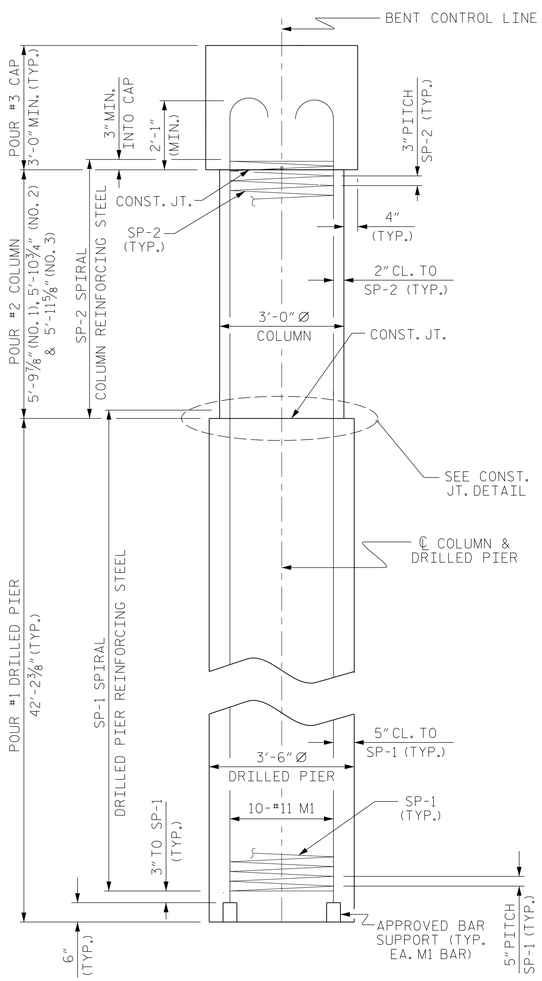

END ELEVATION

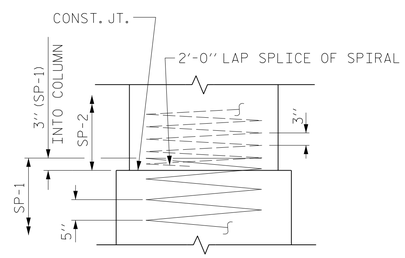

CONSTRUCTION JOINT DETAIL

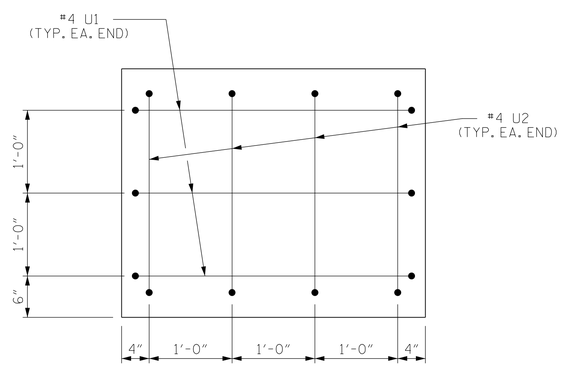

END OF CAP VIEW

(TYPICAL BOTH ENDS)

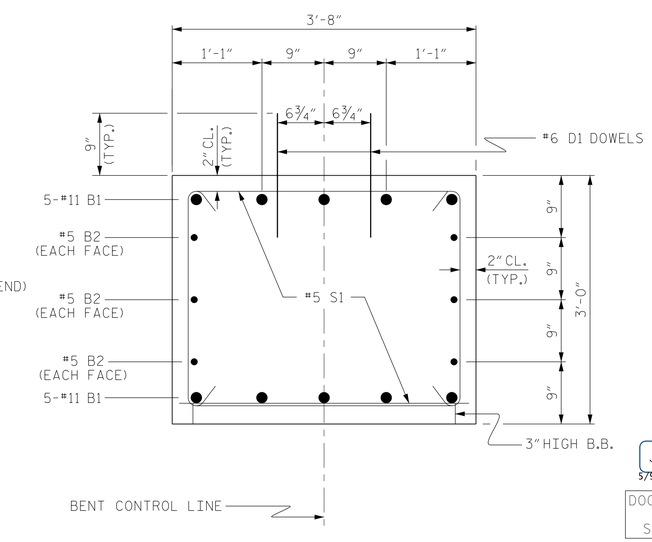

SECTION THRU CAP

BAR TYPES

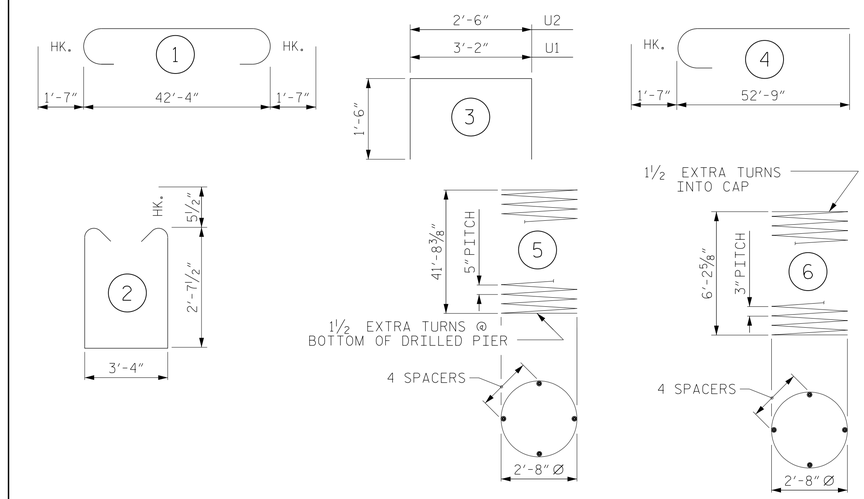

ALL BAR DIMENSIONS ARE OUT TO OUT

BILL OF MATERIAL

FOR ONE BENT

BAR	NO.	SIZE	TYPE	LENGTH	WEIGHT
B1	10	#11	1	45'-6"	2417
B2	6	#5	STR	42'-6"	266
D1	44	#6	STR	1'-6"	99
M1	30	#11	4	54'-4"	8660
S1	74	#5	2	9'-6"	733
U1	6	#4	3	6'-2"	25
U2	8	#4	3	5'-6"	29

REINFORCING STEEL (FOR ONE BENT) 12,229 LBS.

SP-1	3	*	5	835'-5"	2614
SP-2	3	**	6	217'-8"	436

SPIRAL COLUMN REINFORCING STEEL (FOR ONE BENT) 3,050 LBS.

* THE SP-1 SPIRAL REINFORCING STEEL SHALL BE W31 OR D-31 COLD DRAWN WIRE OR #5 PLAIN OR DEFORMED BAR

** THE SP-2 SPIRAL REINFORCING STEEL SHALL BE W20 OR D-20 COLD DRAWN WIRE OR #4 PLAIN OR DEFORMED BAR

CLASS A CONCRETE BREAKDOWN (FOR ONE BENT)

POUR #2 (COLUMNS)	4.7 C.Y.
POUR #3 (CAP)	17.5 C.Y.
TOTAL CLASS A CONCRETE	22.2 C.Y.

DRILLED PIERS: (FOR ONE BENT)

DRILLED PIER CONCRETE	
POUR #1 (DRILLED PIERS)	45.2 C.Y.
3'-6" Ø DRILLED PIER NOT IN SOIL	25 LIN. FT.
3'-6" Ø DRILLED PIER IN SOIL	101.6 LIN. FT.
PERMANENT STEEL CASING FOR 3'-6" Ø DRILLED PIER	105.6 LIN. FT.
CSL TUBES	524.4 LIN. FT.

PROJECT NO. B-5145

PERSON COUNTY

STATION: 14+50.00 -L-

SHEET 6 OF 8

STATE OF NORTH CAROLINA
DEPARTMENT OF TRANSPORTATION
RALEIGH

SUBSTRUCTURE

BENT No. 1

NORTH CAROLINA PROFESSIONAL SEAL 041425 ENGINEER JEFFREY M. LOFTUS

DocuSigned by: Jeff Loftus 5/9/2018

DOCUMENT NOT CONSIDERED FINAL UNLESS ALL SIGNATURES COMPLETED

STEWART

Firm License No. C-1051
421 Fayetteville St,
Suite 400
Raleigh, NC 27601
T 919.380.8750
www.stewartinc.com

REVISIONS						SHEET NO.
NO.	BY:	DATE:	NO.	BY:	DATE:	S-17
1			3			TOTAL SHEETS
2			4			22

DRAWN BY:	J. LOFTUS	DATE : 6/17
CHECKED BY:	E. PHELPS	DATE : 9/17
DESIGN ENGINEER OF RECORD:	J. LOFTUS	DATE : 10/17

4/17/2018
...\400_017_B5145_SMU_SUB06.dgn
USER:jloftus

R 2707C_SITE 3

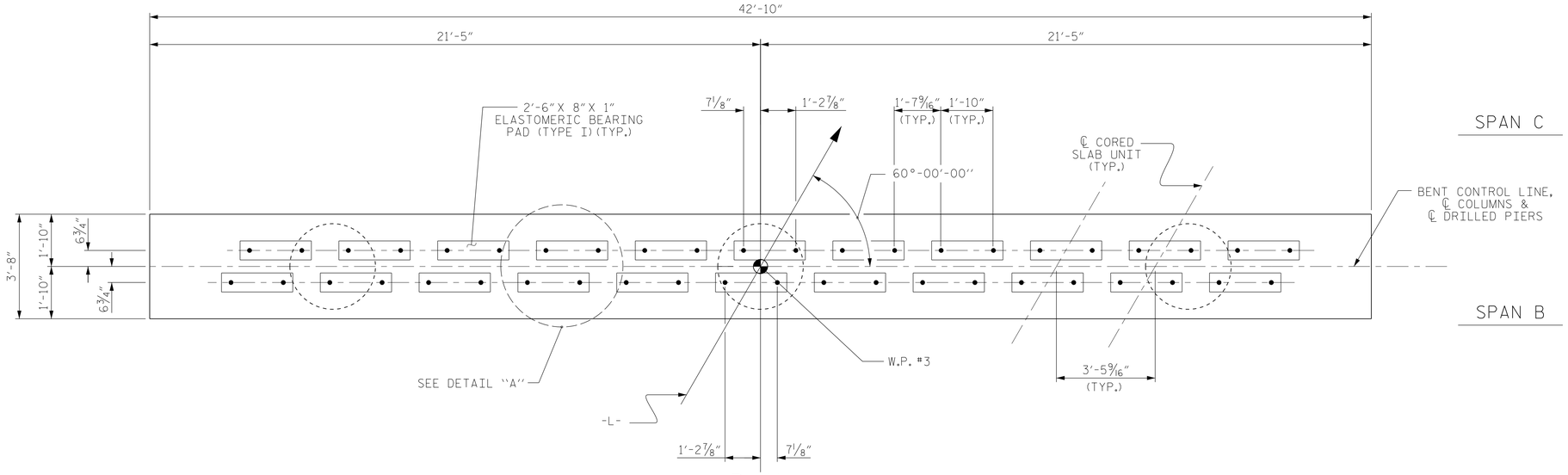

PLAN

NOTES

STIRRUPS IN CAP MAY BE SHIFTED AS NECESSARY TO CLEAR DOWELS.

HOOKS ON "M" BARS MAY BE TURNED AS NECESSARY FOR PLACING REINFORCING STEEL.

SPLICING OF THE LONGITUDINAL BARS IN THE DRILLED PIER WILL NOT BE PERMITTED.

FOR DRILLED PIERS, SEE SECTION 411 OF THE STANDARD SPECIFICATIONS.

ALL STEEL IN THE DRILLED PIERS IS INCLUDED IN THE PAY ITEMS FOR "REINFORCING STEEL" AND "SPIRAL COLUMN REINFORCING STEEL."

★ INVERT ALTERNATE STIRRUPS.

DRILLED PIERS SHALL BE TERMINATED ONE FOOT ± ABOVE NORMAL WATER SURFACE ELEVATION FOR SHAFTS LOCATED IN WATER.

THE CONTRACTOR'S ATTENTION IS CALLED TO THE FACT THAT THE LONGITUDINAL REINFORCEMENT FOR DRILLED PIERS IS DETAILED WITH 3 FEET OF EXTRA LENGTH.

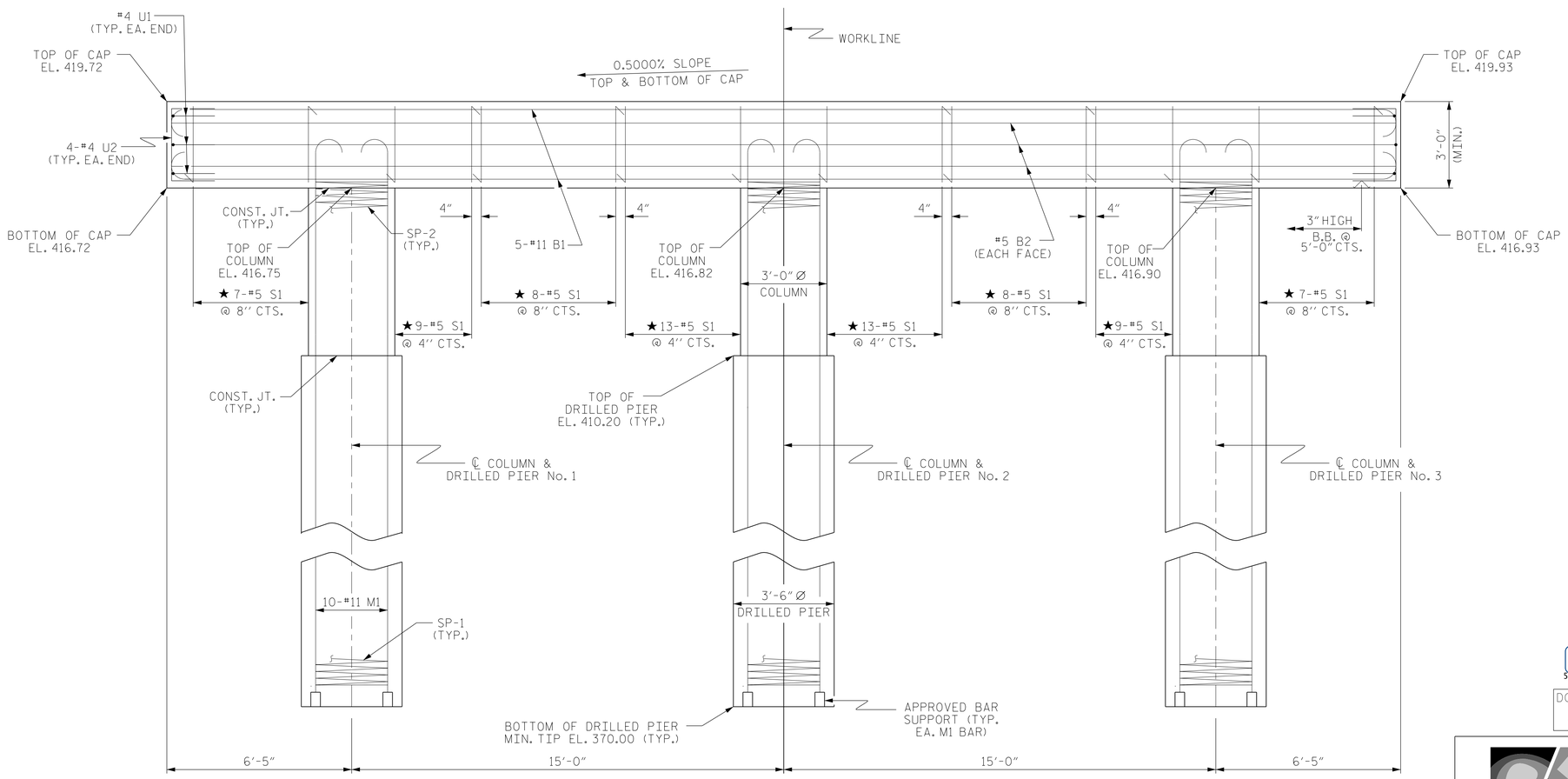

ELEVATION

DIMENSIONS & REINFORCING STEEL ARE TYPICAL FOR EACH COLUMN & DRILLED PIER UNLESS OTHERWISE NOTED.

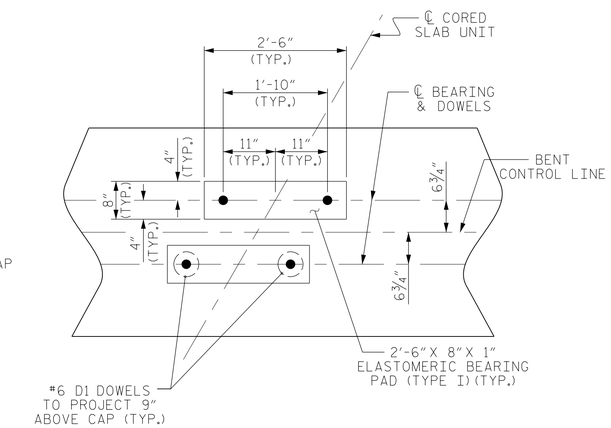

DETAIL "A"

(DIMENSIONS ARE TYPICAL EACH BEARING)

PROJECT NO. B-5145

PERSON COUNTY

STATION: 14+50.00 -L-

SHEET 7 OF 8

STATE OF NORTH CAROLINA
DEPARTMENT OF TRANSPORTATION
RALEIGH

SUBSTRUCTURE
BENT No. 2

NORTH CAROLINA PROFESSIONAL SEAL 041425 ENGINEER JEFFREY M. LOFTUS

DocuSigned by: Jeff Loftus
5/9/2018

DOCUMENT NOT CONSIDERED FINAL UNLESS ALL SIGNATURES COMPLETED

STEWART

Firm License No. C-1051
421 Fayetteville St,
Suite 400
Raleigh, NC 27601
T 919.380.8750
www.stewartinc.com

REVISIONS							SHEET NO.
NO.	BY:	DATE:	NO.	BY:	DATE:		S-18
1			3				TOTAL SHEETS
2			4				22

DRAWN BY:	J. LOFTUS	DATE :	6/17
CHECKED BY:	E. PHELPS	DATE :	9/17
DESIGN ENGINEER OF RECORD:	J. LOFTUS	DATE :	10/17

4/17/2018
...\400_018_B5145_SMU_SUB07.dgn
USER:jloftus

R 2707C_SITE 3

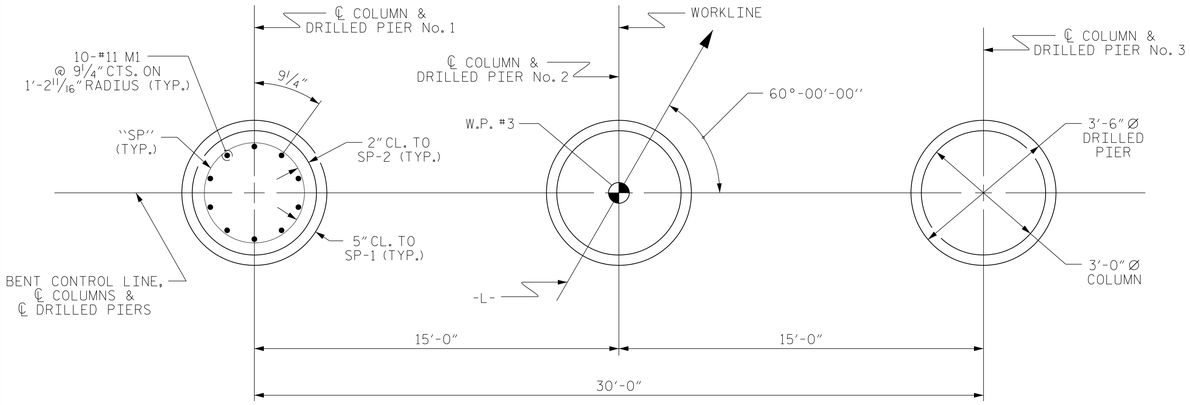

PLAN OF DRILLED PIERS & COLUMNS

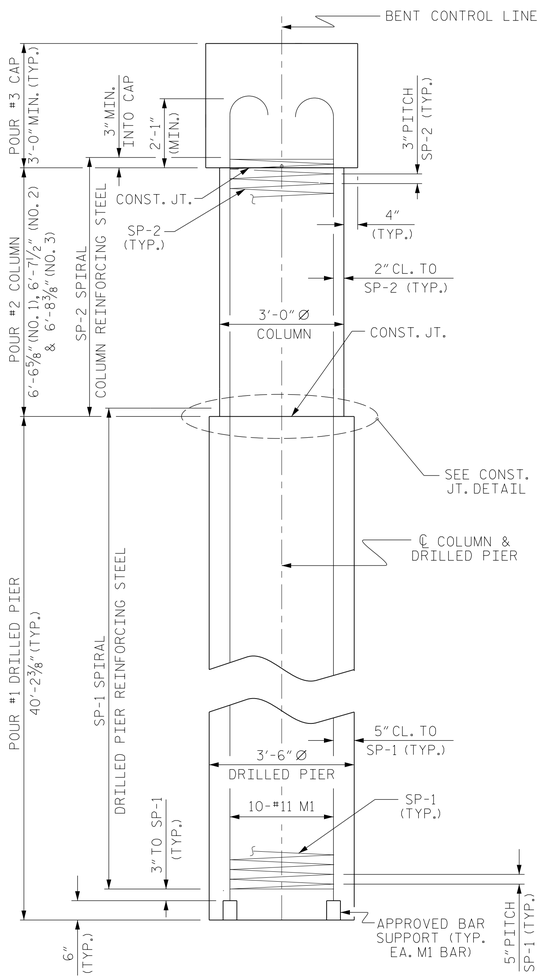

END ELEVATION

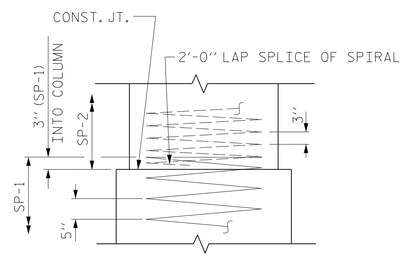

CONSTRUCTION JOINT DETAIL

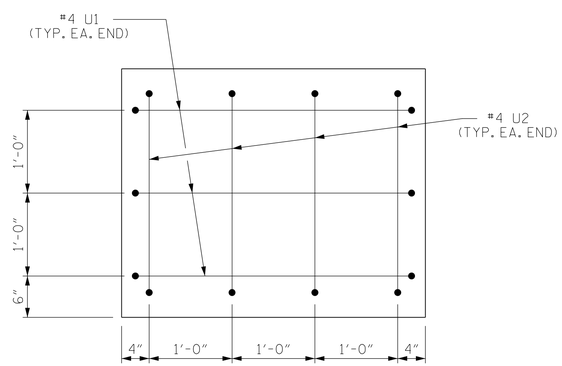

END OF CAP VIEW

(TYPICAL BOTH ENDS)

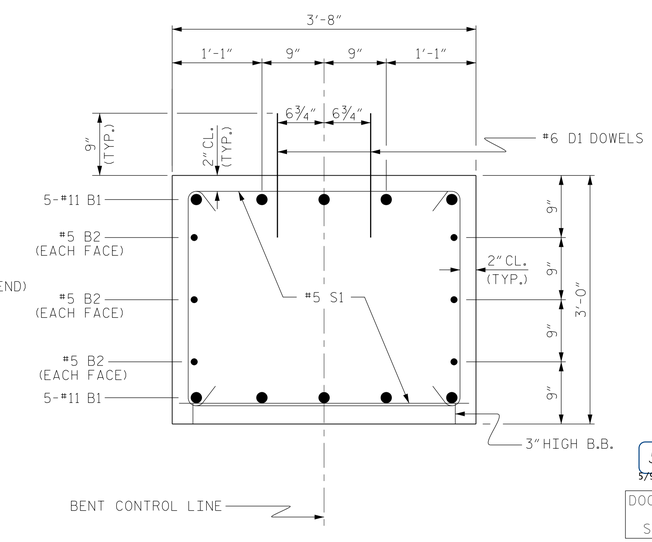

SECTION THRU CAP

BAR TYPES

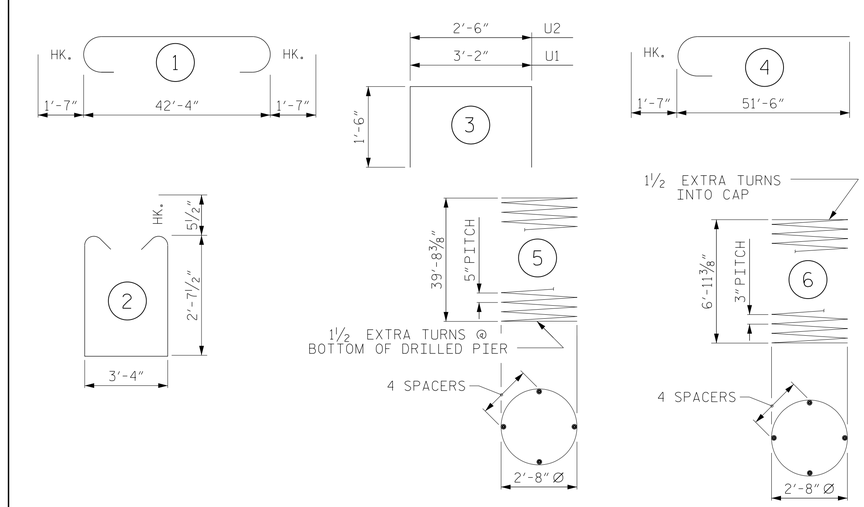

ALL BAR DIMENSIONS ARE OUT TO OUT

BILL OF MATERIAL

FOR ONE BENT

BAR	NO.	SIZE	TYPE	LENGTH	WEIGHT
B1	10	#11	1	45'-6"	2417
B2	6	#5	STR	42'-6"	266
D1	44	#6	STR	1'-6"	99
M1	30	#11	4	53'-1"	8461
S1	74	#5	2	9'-6"	733
U1	6	#4	3	6'-2"	25
U2	8	#4	3	5'-6"	29

REINFORCING STEEL (FOR ONE BENT) 12,030 LBS.

SP-1	3	*	5	796'-0"	2491
SP-2	3	**	6	241'-9"	484

SPIRAL COLUMN REINFORCING STEEL (FOR ONE BENT) 2,975 LBS.

* THE SP-1 SPIRAL REINFORCING STEEL SHALL BE W31 OR D-31 COLD DRAWN WIRE OR #5 PLAIN OR DEFORMED BAR

** THE SP-2 SPIRAL REINFORCING STEEL SHALL BE W20 OR D-20 COLD DRAWN WIRE OR #4 PLAIN OR DEFORMED BAR

CLASS A CONCRETE BREAKDOWN (FOR ONE BENT)

POUR #2 (COLUMNS)	5.3 C.Y.
POUR #3 (CAP)	17.5 C.Y.
TOTAL CLASS A CONCRETE	22.8 C.Y.

DRILLED PIERS: (FOR ONE BENT)

DRILLED PIER CONCRETE
POUR #1 (DRILLED PIERS) 43.0 C.Y.

3'-6" Ø DRILLED PIER NOT IN SOIL 25 LIN. FT.

3'-6" Ø DRILLED PIER IN SOIL 95.6 LIN. FT.

PERMANENT STEEL CASING FOR 3'-6" Ø DRILLED PIER 105.6 LIN. FT.

CSL TUBES 500.4 LIN. FT.

PROJECT NO. B-5145
PERSON COUNTY
STATION: 14+50.00 -L-

SHEET 8 OF 8

STATE OF NORTH CAROLINA
DEPARTMENT OF TRANSPORTATION
RALEIGH

SUBSTRUCTURE
BENT No. 2

NORTH CAROLINA PROFESSIONAL SEAL 041425 ENGINEER JEFFREY M. LOFTUS

DocuSigned by: Jeff Loftus 3/9/2018

DOCUMENT NOT CONSIDERED FINAL UNLESS ALL SIGNATURES COMPLETED

STEWART
Firm License No. C-1051
421 Fayetteville St, Suite 400
Raleigh, NC 27601
T 919.380.8750
www.stewartinc.com

REVISIONS						SHEET NO.
NO.	BY:	DATE:	NO.	BY:	DATE:	S-19
1			3			TOTAL SHEETS
2			4			22

DRAWN BY: J. LOFTUS DATE: 6/17
CHECKED BY: E. PHELPS DATE: 9/17
DESIGN ENGINEER OF RECORD: J. LOFTUS DATE: 10/17

R 2707C_SITE 3

4/17/2018
...\400_019_B5145_SMU_SUB08.dgn
USER:jloftus

NOTES :

FOR BERM WIDTH DIMENSIONS, SEE GENERAL DRAWING.

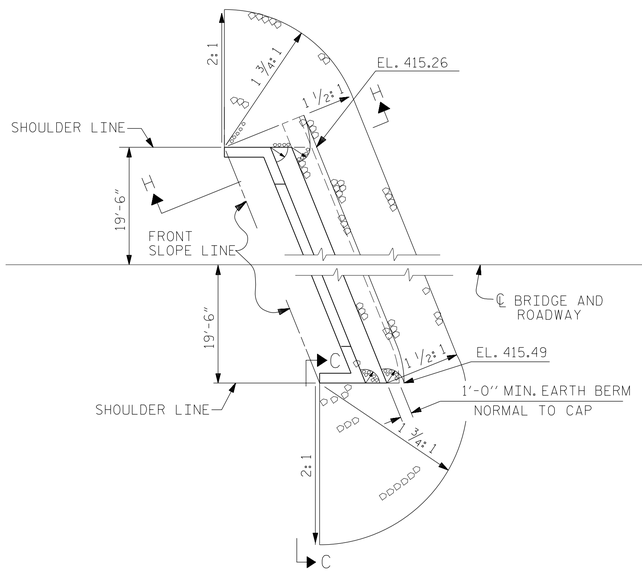

END BENT NO. 1

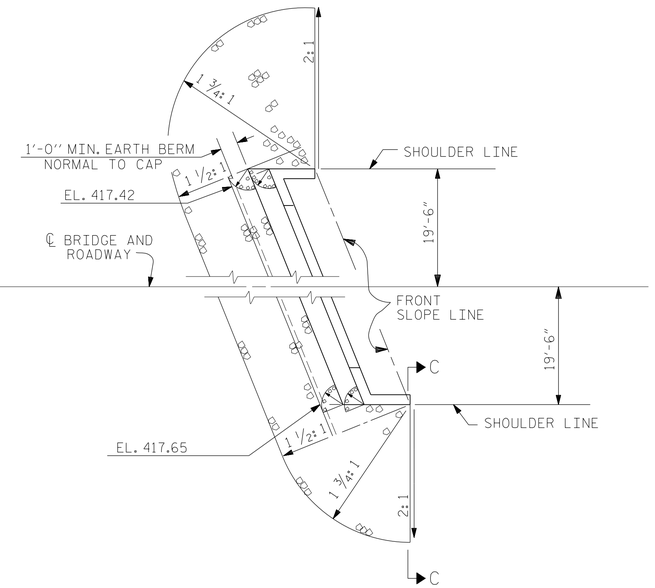

END BENT NO. 2

ESTIMATED QUANTITIES		
BRIDGE @ STA. 14+50.00 -L-	RIP RAP CLASS II (2'-0" THICK)	GEOTEXTILE FOR DRAINAGE
	TONS	SQUARE YARDS
END BENT 1	108	120
END BENT 2	115	127

PLAN OF RIP RAP

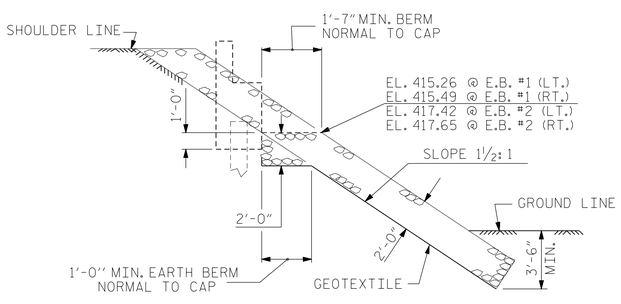

SECTION H-H

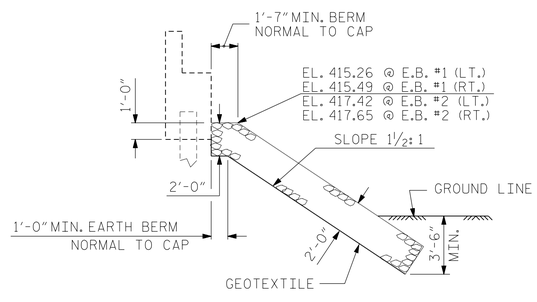

℄ SECTION

BERM RIP RAPPED

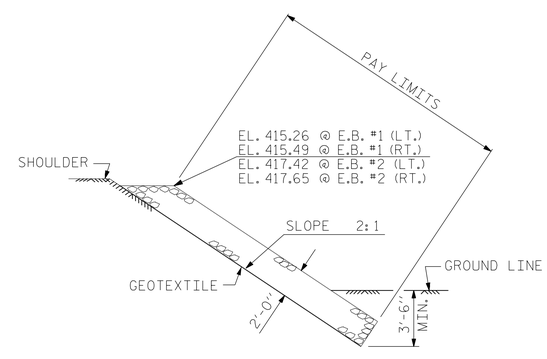

SECTION C-C

PROJECT NO. B-5145

PERSON COUNTY

STATION: 14+50.00 -L-

NORTH CAROLINA PROFESSIONAL SEAL 041425 ENGINEER JEFFREY M. LOFTUS

DocuSigned by: Jeff Loftus 5/9/2018

DOCUMENT NOT CONSIDERED FINAL UNLESS ALL SIGNATURES COMPLETED

STEWART

Firm License No. C-1051
421 Fayetteville St,
Suite 400
Raleigh, NC 27601
T 919.380.8750
www.stewartinc.com

STATE OF NORTH CAROLINA
DEPARTMENT OF TRANSPORTATION
RALEIGH

STANDARD

RIP RAP DETAILS

REVISIONS						SHEET NO.
NO.	BY:	DATE:	NO.	BY:	DATE:	S-20
1			3			TOTAL SHEETS
2			4			22

DRAWN BY:	J. LOFTUS	DATE :	6/17
CHECKED BY:	E. PHELPS	DATE :	9/17
DESIGN ENGINEER OF RECORD:	J. LOFTUS	DATE :	10/17

4/17/2018
...\400_020_B5145_SMU_RR01.dgn
USER:jloftus

R 2707C_SITE 3

STD. NO. RR1 (Sht 1)

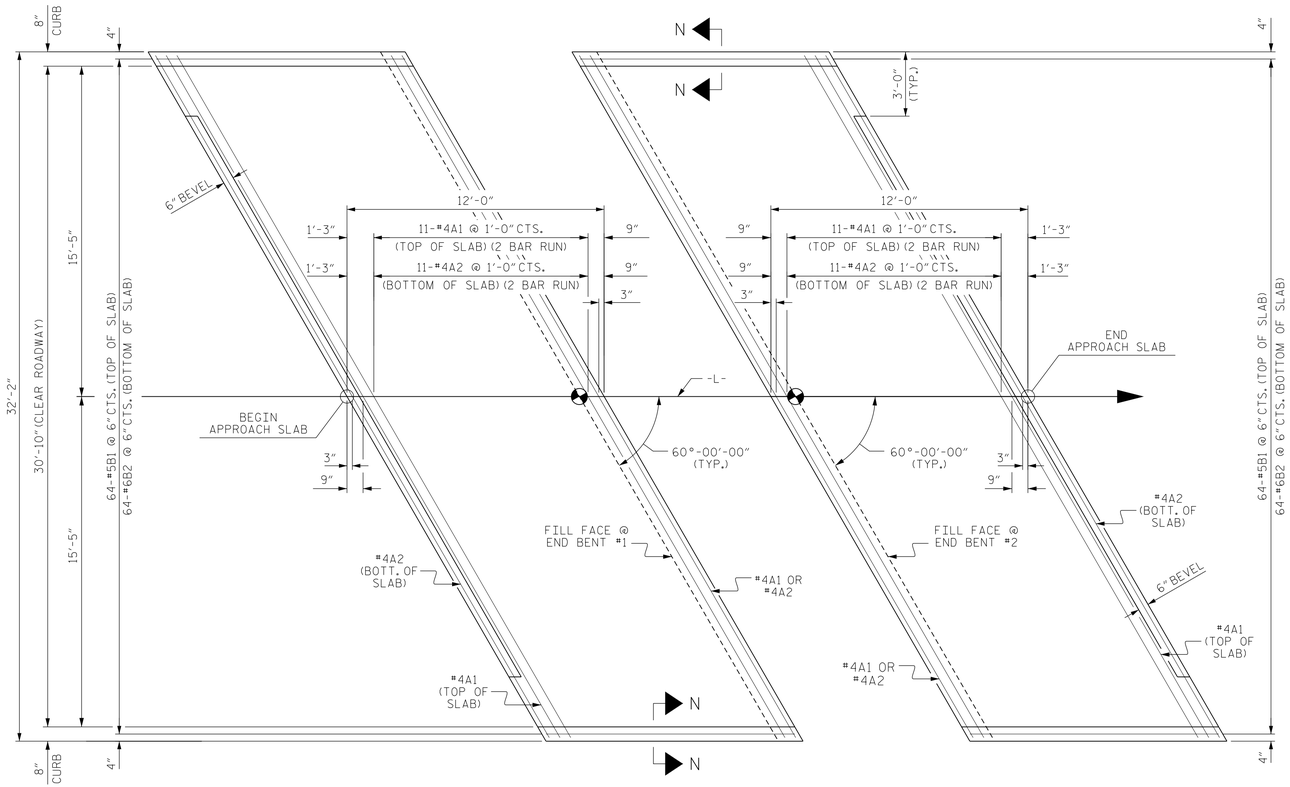

PLAN @ END BENT #1

PLAN @ END BENT #2

DIMENSIONS SHOWN ARE TYPICAL FOR BOTH APPROACH SLABS

NOTES

FOR BRIDGE APPROACH FILL INCLUDING GEOTEXTILE, 4"Ø DRAINAGE PIPE, AND SELECT MATERIAL BACKFILL, SEE ROADWAY PLANS.

GEOTEXTILE SHALL BE TYPE 1 IN ACCORDANCE WITH THE STANDARD SPECIFICATIONS SECTION 1056.

SELECT MATERIAL BACKFILL (CLASS V OR CLASS VI) SHALL BE IN ACCORDANCE WITH STANDARD SPECIFICATIONS SECTION 1016.

SELECT MATERIAL BACKFILL IS TO BE CONTINUOUS ALONG FILL FACE OF BACKWALL FROM OUTSIDE EDGE TO OUTSIDE EDGE OF APPROACH SLAB.

FOR THE 4"Ø DRAINAGE PIPE OUTLET(S), SEE ROADWAY STANDARD DRAWINGS.

AREA BETWEEN THE WINGWALL AND APPROACH SLAB SHALL BE GRADED TO DRAIN THE WATER AWAY FROM THE FILL FACE OF THE BRIDGE AND SHALL BE PAVED. SEE ROADWAY PLANS.

APPROACH SLAB GROOVING IS NOT REQUIRED.

BILL OF MATERIAL

APPROACH SLAB AT EB #1

BAR	NO.	SIZE	TYPE	LENGTH	WEIGHT
* A1	26	#4	STR	19'-5"	337
A2	26	#4	STR	19'-4"	336
* B1	64	#5	STR	11'-1"	740
B2	64	#6	STR	11'-7"	1113
REINFORCING STEEL				LBS.	1449
* EPOXY COATED REINFORCING STEEL				LBS.	1077
CLASS AA CONCRETE				C.Y.	18.6

APPROACH SLAB AT EB #2

BAR	NO.	SIZE	TYPE	LENGTH	WEIGHT
* A1	26	#4	STR	19'-5"	337
A2	26	#4	STR	19'-4"	336
* B1	64	#5	STR	11'-1"	740
B2	64	#6	STR	11'-7"	1113
REINFORCING STEEL				LBS.	1449
* EPOXY COATED REINFORCING STEEL				LBS.	1077
CLASS AA CONCRETE				C.Y.	18.6

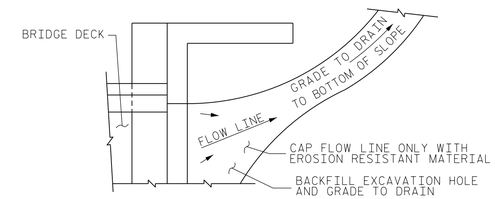

NOTE: IF THE APPROACH SLAB IS NOT CONSTRUCTED IMMEDIATELY AFTER THE BACKFILLING OF THE END BENT EXCAVATION, GRADE TO DRAIN TO THE BOTTOM OF THE SLOPE AND PROVIDE EROSION RESISTANT MATERIAL, SUCH AS FIBERGLASS ROVING OR AS DIRECTED BY THE ENGINEER TO PREVENT SOIL EROSION AND TO PROTECT THE AREA ADJACENT TO THE STRUCTURE. THE CONTRACTOR WILL BE REQUIRED TO REMOVE THESE MATERIALS PRIOR TO CONSTRUCTION OF THE APPROACH SLAB.

TEMPORARY DRAINAGE DETAIL

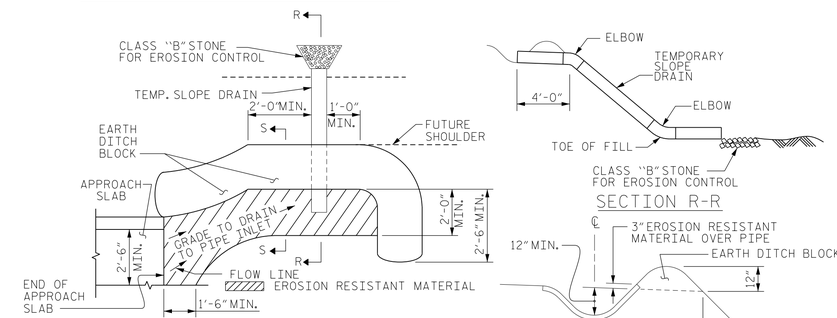

NOTE: IMMEDIATELY AFTER THE CONSTRUCTION OF THE APPROACH SLAB, THE CONTRACTOR SHALL PROVIDE TEMPORARY BERM AND SLOPE DRAIN. CONTRACTOR SHALL GRADE TO PIPE INLET AND PROVIDE EROSION RESISTANT MATERIAL AS SHOWN. THE EROSION RESISTANT MATERIAL SHALL BE EITHER 1) ASPHALT PLANT MIX, TYPE 1 OR TYPE 2, MIN. 2" DEPTH, 2) EROSION CONTROL MAT, OR 3) CONCRETE, AS DIRECTED BY THE ENGINEER. THE SLOPE DRAIN SHALL CONSIST OF A NON-PERFORATED TEMPORARY DRAINAGE PIPE, 12 INCHES IN DIAMETER.

PLAN VIEW

TEMPORARY BERM AND SLOPE DRAIN DETAILS

(TO BE USED WHEN SHOULDER BERM GUTTER IS REQUIRED)

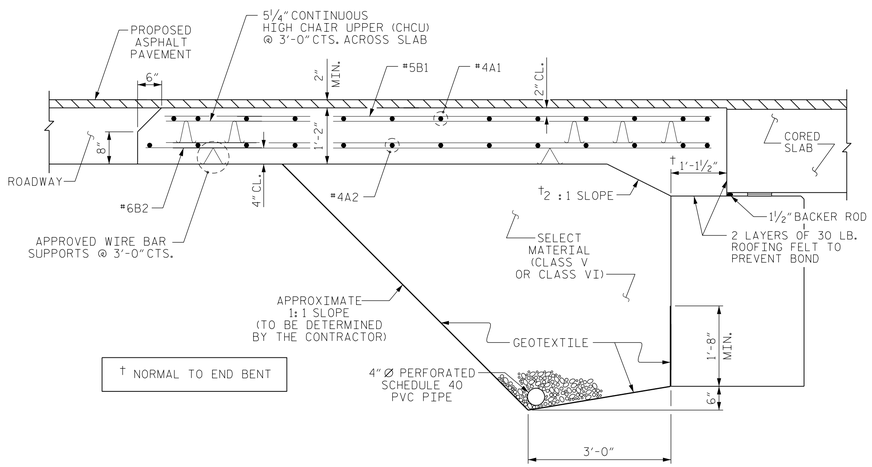

† NORMAL TO END BENT

SECTION THRU SLAB

(TYPE II - MODIFIED APPROACH FILL)

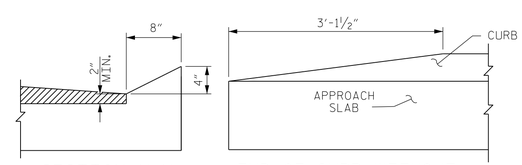

SECTION N-N

END OF CURB WITHOUT SHOULDER BERM GUTTER

CURB DETAILS

SPLICE LENGTHS		
BAR SIZE	EPOXY COATED	UNCOATED
#4	2'-0"	1'-9"
#5	2'-6"	2'-2"
#6	3'-10"	2'-7"

PROJECT NO. B-5145

PERSON COUNTY

STATION: 14+50.00 -L-

NORTH CAROLINA PROFESSIONAL SEAL 11725 ENGINEER DAVID R. RUGGLES

DocuSigned by: David Ruggles C4627680F412422...
5/21/2018

DOCUMENT NOT CONSIDERED FINAL UNLESS ALL SIGNATURES COMPLETED

STEWART

Firm License No. C-1051
421 Fayetteville St,
Suite 400
Raleigh, NC 27601
T 919.380.8750
www.stewartinc.com

STATE OF NORTH CAROLINA
DEPARTMENT OF TRANSPORTATION
RALEIGH

STANDARD
BRIDGE APPROACH SLAB
FOR PRESTRESSED CONCRETE
CORED SLAB UNIT
(SUB-REGIONAL TIER)
60° SKEW

REVISIONS						SHEET NO.
NO.	BY:	DATE:	NO.	BY:	DATE:	S-21
1			3			TOTAL SHEETS
2			4			22

DRAWN BY:	J. LOFTUS	DATE :	6/17
CHECKED BY:	E. PHELPS	DATE :	9/17
DESIGN ENGINEER OF RECORD:	J. LOFTUS	DATE :	10/17

B-5145

5/17/2018
...\400_021_B5145_SMU_AS01.dgn
USER:default

STD. NO. BAS_33_60S

STANDARD NOTES

DESIGN DATA:

SPECIFICATIONS	A.A.S.H.T.O. (CURRENT)
LIVE LOAD	SEE PLANS
IMPACT ALLOWANCE	SEE A.A.S.H.T.O.
STRESS IN EXTREME FIBER OF	
STRUCTURAL STEEL - AASHTO M270 GRADE 36	20,000 LBS. PER SQ. IN.
- AASHTO M270 GRADE 50W	27,000 LBS. PER SQ. IN.
- AASHTO M270 GRADE 50	27,000 LBS. PER SQ. IN.
REINFORCING STEEL IN TENSION	
GRADE 60	24,000 LBS. PER SQ. IN.
CONCRETE IN COMPRESSION	1,200 LBS. PER SQ. IN.
CONCRETE IN SHEAR	SEE A.A.S.H.T.O.
STRUCTURAL TIMBER - TREATED OR	
UNTREATED - EXTREME FIBER STRESS	1,800 LBS. PER SQ. IN.
COMPRESSION PERPENDICULAR TO GRAIN OF TIMBER	375 LBS. PER SQ. IN.
EQUIVALENT FLUID PRESSURE OF EARTH	30 LBS. PER CU. FT. (MINIMUM)

MATERIAL AND WORKMANSHIP:

EXCEPT AS MAY OTHERWISE BE SPECIFIED ON PLANS OR IN THE SPECIAL PROVISIONS, ALL MATERIAL AND WORKMANSHIP SHALL BE IN ACCORDANCE WITH THE 2012 "STANDARD SPECIFICATIONS FOR ROADS AND STRUCTURES" OF THE N. C. DEPARTMENT OF TRANSPORTATION.

STEEL SHEET PILING FOR PERMANENT OR TEMPORARY APPLICATIONS SHALL BE HOT ROLLED.

CONCRETE:

UNLESS OTHERWISE REQUIRED ON PLANS, CLASS A CONCRETE SHALL BE USED FOR ALL PORTIONS OF ALL STRUCTURES WITH THE EXCEPTION THAT: CLASS AA CONCRETE SHALL BE USED IN BRIDGE SUPERSTRUCTURES, ABUTMENT BACKWALLS, AND APPROACH SLABS; AND CLASS B CONCRETE SHALL BE USED FOR SLOPE PROTECTION AND RIP RAP.

CONCRETE CHAMFERS:

UNLESS OTHERWISE NOTED ON THE PLANS, ALL EXPOSED CORNERS ON STRUCTURES SHALL BE CHAMFERED 3/4" WITH THE FOLLOWING EXCEPTIONS: TOP CORNERS OF CURBS MAY BE ROUNDED TO 1-1/2" RADIUS WHICH IS BUILT INTO CURB FORMS; CORNERS OF TRANSVERSE FLOOR EXPANSION JOINTS SHALL BE ROUNDED WITH A 1/4" FINISHING TOOL UNLESS OTHERWISE REQUIRED ON PLANS; AND CORNERS OF EXPANSION JOINTS IN THE ROADWAY FACES AND TOPS OF CURBS AND SIDEWALKS SHALL BE ROUNDED TO A 1/4" RADIUS WITH A FINISHING STONE OR TOOL UNLESS OTHERWISE REQUIRED ON PLANS.

DOWELS:

DOWELS WHEN INDICATED ON PLANS AS FOR CULVERT EXTENSIONS, SHALL BE EMBEDDED AT LEAST 12" INTO THE OLD CONCRETE AND GROUTED INTO PLACE WITH 1:2 CEMENT MORTAR.

ALLOWANCE FOR DEAD LOAD DEFLECTION, SETTLEMENT, ETC. IN CASTING SUPERSTRUCTURES:

BRIDGES SHALL BE BUILT ON THE GRADE OR VERTICAL CURVE SHOWN ON PLANS. SLABS, CURBS AND PARAPETS SHALL CONFORM TO THE GRADE OR CURVE.

ALL DIMENSIONS WHICH ARE GIVEN IN SECTION AND ARE AFFECTED BY DEAD LOAD DEFLECTIONS ARE DIMENSIONS AT CENTER LINE OF BEARING UNLESS OTHERWISE NOTED ON PLANS. IN SETTING FORMS FOR STEEL BEAM BRIDGES AND PRESTRESSED CONCRETE GIRDER BRIDGES, ADJUSTMENTS SHALL BE MADE DUE TO THE DEAD LOAD DEFLECTIONS FOR THE ELEVATIONS SHOWN. WHERE BLOCKS ARE SHOWN OVER BEAMS FOR BUILDING UP TO THE SLAB, THE VERTICAL DIMENSIONS OF THE BLOCKS SHALL BE ADJUSTED BETWEEN BEARINGS TO COMPENSATE FOR DEAD LOAD DEFLECTIONS, VERTICAL CURVE ORDINATE, AND ACTUAL BEAM CAMBER. WHERE BOTTOM OF SLAB IS IN LINE WITH BOTTOM OF TOP FLANGES, DEPTH OF SLAB BETWEEN BEARINGS SHALL BE ADJUSTED TO COMPENSATE FOR DEAD LOAD DEFLECTION, VERTICAL CURVE ORDINATE, AND ACTUAL BEAM CAMBER.

IN SETTING FALSEWORK AND FORMS FOR REINFORCED CONCRETE SPANS, AN ALLOWANCE SHALL BE MADE FOR DEAD LOAD DEFLECTIONS, SETTLEMENT OF FALSEWORK, AND PERMANENT CAMBER WHICH SHALL BE PROVIDED FOR IN ADDITION TO THE ELEVATIONS SHOWN. AFTER REMOVAL OF THE FALSEWORK, THE FINISHED STRUCTURES SHALL CONFORM TO THE PROFILE AND ELEVATIONS SHOWN ON THE PLANS AND CONSTRUCTION ELEVATIONS FURNISHED BY THE ENGINEER.

DETAILED DRAWINGS FOR FALSEWORK OR FORMS FOR BRIDGE SUPERSTRUCTURE AND ANY STRUCTURE OR PARTS OF A STRUCTURE AS NOTED ON THE PLANS SHALL BE SUBMITTED TO THE ENGINEER FOR APPROVAL BEFORE CONSTRUCTION OF THE FALSEWORK OR FORMS IS STARTED.

REINFORCING STEEL:

ALL REINFORCING STEEL SHALL BE DEFORMED. DIMENSIONS RELATIVE TO PLACEMENT OF REINFORCING ARE TO CENTERS OF BARS UNLESS OTHERWISE INDICATED IN THE PLANS. DIMENSIONS ON BAR DETAILS ARE TO CENTERS OF BARS OR ARE OUT TO OUT AS INDICATED ON PLANS.

WIRE BAR SUPPORTS SHALL BE PROVIDED FOR REINFORCING STEEL WHERE INDICATED ON THE PLANS. WHEN BAR SUPPORT PIECES ARE PLACED IN CONTINUOUS LINES, THEY SHALL BE SO PLACED THAT THE ENDS OF THE SUPPORTING WIRES SHALL BE LAPPED TO LOCK LEGS ON ADJOINING PIECES.

STRUCTURAL STEEL:

AT THE CONTRACTOR'S OPTION, HE MAY SUBSTITUTE 7/8" Ø SHEAR STUDS FOR THE 3/4" Ø STUDS SPECIFIED ON THE PLANS. THIS SUBSTITUTION SHALL BE MADE AT THE RATE OF 3 - 7/8" Ø STUDS FOR 4 - 3/4" Ø STUDS, AND STUD SPACING CHANGES SHALL BE MADE AS NECESSARY TO PROVIDE THE SAME EQUIVALENT NUMBER OF 7/8" Ø STUDS ALONG THE BEAM AS SHOWN FOR 3/4" Ø STUDS BASED ON THE RATIO OF 3 - 7/8" Ø STUDS FOR 4 - 3/4" Ø STUDS. STUDS OF THE LENGTH SPECIFIED ON THE PLANS MUST BE PROVIDED. THE MAXIMUM SPACING SHALL BE 2'-0".

EXCEPT AT THE INTERIOR SUPPORTS OF CONTINUOUS BEAMS WHERE THE COVER PLATE IS IN CONTACT WITH BEARING PLATE, THE CONTRACTOR MAY, AT HIS OPTION, SUBSTITUTE FOR THE COVER PLATES DESIGNATED ON THE PLANS COVER PLATES OF THE EQUIVALENT AREA PROVIDED THESE PLATES ARE AT LEAST 5/16" IN THICKNESS AND DO NOT EXCEED A WIDTH EQUAL TO THE FLANGE WIDTH LESS 2" OR A THICKNESS EQUAL TO 2 TIMES THE FLANGE THICKNESS. THE SIZE OF FILLET WELDS SHALL CONFORM TO THE REQUIREMENTS OF THE CURRENT ANSI/AASHTO/AWS "BRIDGE WELDING CODE". ELECTROSLAG WELDING WILL NOT BE PERMITTED.

WITH THE SOLE EXCEPTION OF EDGES AT SURFACES WHICH BEAR ON OTHER SURFACES, ALL SHARP EDGES AND ENDS OF SHAPES AND PLATES SHALL BE SLIGHTLY ROUNDED BY SUITABLE MEANS TO A RADIUS OF APPROXIMATELY 1/16 INCH OR EQUIVALENT FLAT SURFACE AT A SUITABLE ANGLE PRIOR TO PAINTING, GALVANIZING, OR METALLIZING.

HANDRAILS AND POSTS:

METAL STANDARDS AND FACES OF THE CONCRETE END POSTS FOR THE METAL RAIL SHALL BE SET NORMAL TO THE GRADE OF THE CURB, UNLESS OTHERWISE SHOWN ON PLANS. THE METAL RAIL AND TOPS OF CONCRETE POSTS USED WITH THE ALUMINUM RAIL SHALL BE BUILT PARALLEL TO THE GRADE OF THE CURB.

METAL HANDRAILS SHALL BE IN ACCORDANCE WITH THE PLANS. RAILS SHALL BE AS MANUFACTURED FOR BRIDGE RAILING. CASTINGS SHALL BE OF A UNIFORM APPEARANCE. FINS AND OTHER DEFORMATIONS RESULTING FROM CASTING OR OTHERWISE SHALL BE REMOVED IN A MANNER SO THAT A UNIFORM COLORING OF THE COMPLETED CASTING SHALL BE OBTAINED. CASTINGS WITH DISCOLORATIONS OR OF NON-UNIFORM COLORING WILL NOT BE ACCEPTED. CERTIFIED MILL REPORTS ARE REQUIRED FOR METAL RAILS AND POSTS.

SPECIAL NOTES:

GENERALLY, IN CASE OF DISCREPANCY, THIS STANDARD SHEET OF NOTES SHALL GOVERN OVER THE SPECIFICATIONS, BUT THE REMAINDER OF THE PLANS SHALL GOVERN OVER NOTES HEREON, AND SPECIAL PROVISIONS SHALL GOVERN OVER ALL. SEE SPECIFICATIONS ARTICLE 105-4.

PROJECT NO. B-5145

PERSON COUNTY

STATION: 14+50.00 -L-

STATE OF NORTH CAROLINA
DEPARTMENT OF TRANSPORTATION
RALEIGH

STANDARD NOTES

ENGLISH

JANUARY, 1990

STEWART
Firm License No. C-1051
421 Fayetteville St,
Suite 400
Raleigh, NC 27601
T 919.380.8750
www.stewartinc.com

REVISIONS						SHEET NO.
NO.	BY:	DATE:	NO.	BY:	DATE:	S-22
1			3			TOTAL SHEETS
2			4			22

REV. 6-16-95 EEM (✓) RGW REV. 5-7-03 RWW (✓) JTE REV. 10-1-11 MAA (✓) GM
REV. 8-16-99 RWW (✓) LES REV. 5-1-06 TLA (✓) GM

R 2707C_SITE 3
4/17/2018
...\400_022_B5145_SMU_SN01.dgn
USER:jloftus