NCDOT: C201994 U4763B
ITEM NO. 4090 & 4100

MONGOOSE®

UL/CUL LISTED
MAX AMBIENT: 40°C
MAX WEIGHT: 50lbs (23kg)
EPA: 2.05 sq. ft.

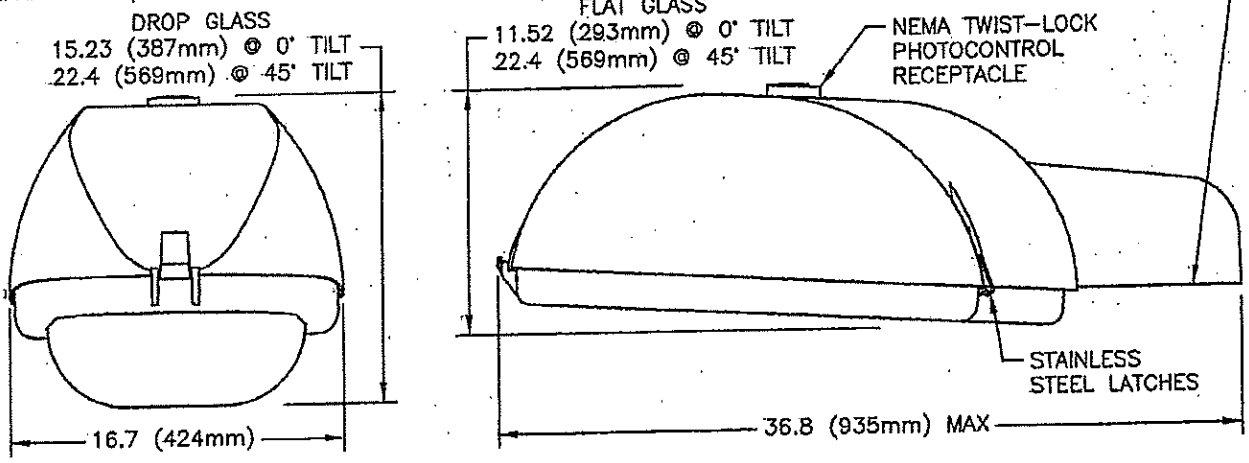

G400HP48LFFVG
CATALOG NUMBER

SOURCE AND WATTAGE

- **100HP** 100W HPS
- **15AHP** 150W HPS
- **200HP** 200W HPS
- **250HP** 250W HPS
- **25LHP** 250W HPS
- **400HP** 400W HPS
- **40LHP** 400W HPS
- **175MH** 175W MH *
- **175PM** 175W PM
- **250MH** 250W MH *
- **400MH** 400W MH *
- **40LMH** 400W MH *
- **250PM** 250W PM
- **400PM** 400W PM
- **40LPM** 400W LPM

VOLTAGE

- **12** 120V
- **20** 208V
- **24** 240V
- **27** 277V
- **48** 480V
- **34** 347V
- **MT** MULTIVOLT 120,208,240,277V
- **MA** MULTIVOLT PRE-WIRED (120V)
- **MB** MULTIVOLT PRE-WIRED (208V)
- **MC** MULTIVOLT PRE-WIRED (240V)
- **MD** MULTIVOLT PRE-WIRED (277V)
- **VT** MULTIVOLT 120, 277, 347V (NOT AVAIABLE IN 200W HPS OR 175W PM)

* NOT AVAILAIBLE FOR SHIPMENT IN THE US AFTER 12-31-08 DUE TO EISA 2007 LEGISLATION

TILT RANGE

- **L** LOW TILT, 0°-18°
- **H** HIGH TILT, 27°-45°

OPTICS

- **DC** MEDIUM ROADWAY, CLEAR DROP GLASS
- **DR** MEDIUM ROADWAY, GLASS REFRACTOR
- **FF** FORWARD THROW, FLAT GLASS
- **NC** NARROW ROADWAY, CLEAR DROP GLASS
- **ND** NARROW FLOOD
- **NF** NARROW ROADWAY, FLAT GLASS
- **NR** NARROW ROADWAY, GLASS REFRACTOR
- **SC** SQUARE, CLEAR DROP GLASS
- **SF** SQUARE, FLAT GLASS
- **WC** WIDE ROADWAY, CLEAR DROP GLASS
- **WD** WIDE FLOOD
- **WF** WIDE ROADWAY, FLAT GLASS
- **WR** WIDE ROADWAY, GLASS REFRACTOR

MOUNTING

- **A** ARCHITECTURAL
- **H** HORIZONTAL
- **V** VERTICAL

FINISH

- **G** GRAY
- **K** BLACK
- **N** GREEN
- **W** WHITE
- **Z** BRONZE

OPTIONS

- **B** TERMINAL BLOCK & NEMA DECAL
- **C** NEMA DECAL
- **P** PROTECTED STARTER
- **R** NEMA TWIST-LOCK PHOTOCONTROL RECEPTACLE
- **T** SPADE TERMINATION FOR BALLAST LEADS
- **3** 3" TO 2" TENON ADAPTER
- **6** 6' PIGTAIL

ACCESSORIES

- **F1** SINGLE FUSING (120, 240, 277 & 347V)
- **F2** DOUBLE FUSING (208, 240 & 480V)
- **LAMP**
- **BKT-5-G** GALVANIZED WOOD POLE BRACKET
- **BR-1091-XX** 3" TO 2" TENON ADAPTER

NORTH CAROLINA Turnpike Authority

This submittal has been reviewed and found to be:

X Accepted

____ Accepted as Noted

____ Returned for Corrections

RJH Initials

3/08/2011 Date

HOLOPHANE®
LEADER IN LIGHTING SOLUTIONS
An AcuityBrands Company

ORDER NO: _____

TYPE: **400 W, TYPE IV**

DRAWING NO. _____
CAD MODEL: MONGOOSE.DWG
DATE: 1-5-09
Sheet 1 of 2

©2002 ACUITY LIGHTING GROUP INC., 214 OAKWOOD AVE., NEWARK, OH 43055

T & H ELECTRICAL CORPORATION
P.O. BOX 1429
WILSON, N.C. 27894-1429

MONGOOSE®

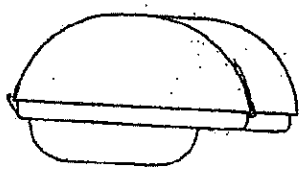

OPTIC TILT RANGE

DC	HIGH
DR	HIGH
FC	LOW
NC	HIGH
NR	ALL
SC	LOW
WC	HIGH
WR	ALL

OPTIC TILT RANGE

FF	LOW
ND	HIGH
NF	LOW
SF	LOW
WD	HIGH
WF	LOW

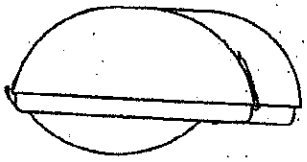

OPTIC TILT RANGE

NC	LOW
WC	LOW

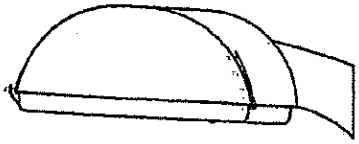

"A" MOUNTING
ATTACHES TO A SQUARE POLE OR TENON ADAPTOR USING PATTERN BELOW

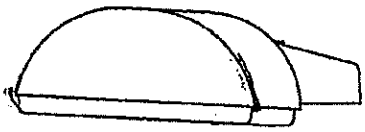

"H" MOUNTING
ATTACHES TO A 2" HORIZONTAL TENON

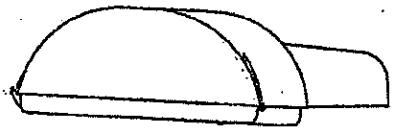

"V" MOUNTING
ATTACHES TO A 2" VERTICAL TENON

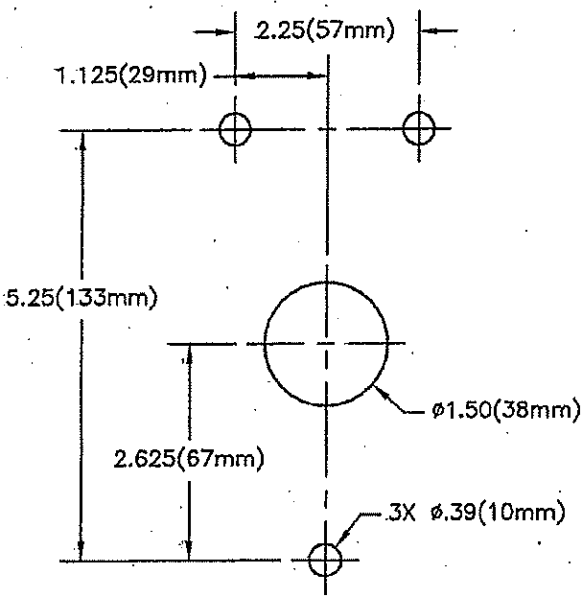

"A" MOUNTING PATTERN

HOLOPHANE®
LEADER IN LIGHTING SOLUTIONS
An AcultyBrands Company

ORDER NO: _____

TYPE: **400 W, TYPE IV**

DRAWING NO. _____
CAD. MODEL: MONGOOSE.DWG
DATE: 1-5-09
Sheet 2

©2002 ACUITY LIGHTING GROUP INC., 214 OAKWOOD AVE., NEWARK, OH 43055

T & H ELECTRICAL CORP
WILSON, NC

N.C. DEPT. OF TRANSPORTATION
DIVISION OF HIGHWAYS
STRUCTURE DESIGN UNIT

X ACCEPTED
___ ACCEPTED AS NOTED
___ SEE LETTER
___ RETURN FOR CORRECTION

March 10, 2011

wcs

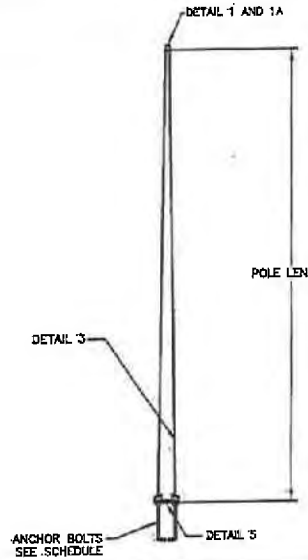

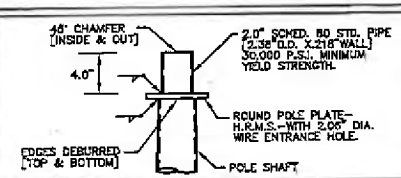

DETAIL 1 — POLE TOP

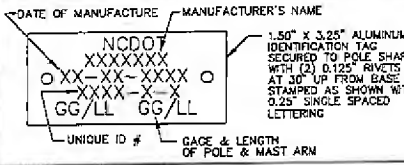

DETAIL 3 — I.D. TAG

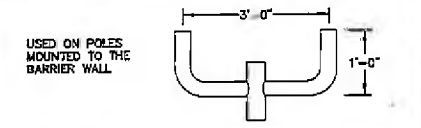

DETAIL 1A — BULLHORN REQUIRED ON 6798-2-2

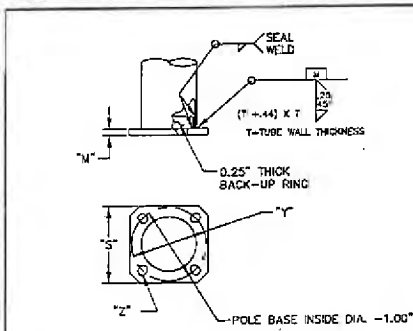

DETAIL 5 — POLE BASE

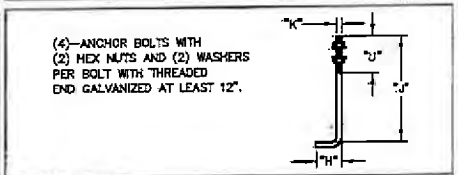

DETAIL 5 — ANCHOR BOLT

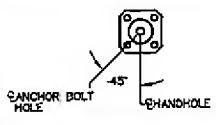

RADIAL INDEX

MATERIAL DATA

COMPONENT	ASTM DESIGNATION	MIN. YIELD (KSI)
POLE SHAFT	A595 GR.A	55
BASE PLATE	A36	36
ANCHOR BOLTS*	F1554 GR.55	55
*BOLTS WELDABLE GRADE W/A194-2H NUTS		
GALVANIZING—POLE	A123	
GALV.—ACCESSORIES	A153	

FABRICATION NOTE:

VALMONT INDUSTRIES, INC. RESERVES THE RIGHT TO INSTALL VARIOUS, ENGINEER APPROVED, MATERIAL HANGING ACCOMMODATIONS TO FACILITATE THE MANUFACTURING PROCESS.

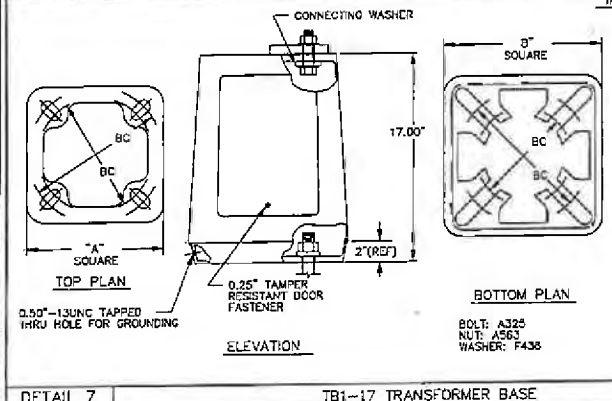

TRANSFORMER BASE NOTES

1. DOOR OPENING APPROXIMATELY 8.75" X 9.25" X 13".
2. TOP BOLT HOLES WILL ACCOMODATE MAXIMUM 1.00" DIA. BOLTS.
3. (4)-2.75" O.D. X 0.50"THICK WSHRS & FINISHED TO ASTM:B695 CLASS 50 PROVIDED FOR INSTALLATION UNDER ANCHOR BOLT HEX NUTS AS SHOWN.
4. (4)-2.50" O.D. X 0.375" THICK CONNECTING WASHERS FINISHED TO ASTM:B695 CLASS 50 PROVIDED FOR INSTALLATION UNDER THE TRANSFORMER BASE TOP PLATE AS SHOWN.
5. MATERIAL SHALL CONFORM TO COMMERCIAL DESIGNATION: A356-T6 ALLOY.
6. BASE CONFORMS TO BREAKAWAY CRITERIA OF AASHTO STANDARD SPECIFICATIONS FOR STRUCTURAL SUPPORTS FOR HIGHWAY SIGNS, LUMINAIRES, AND TRAFFIC SIGNALS (1985).

TB-1

TOP B.C. RANGE = 10.5" TO 13.5"
BOTTOM B.C. RANGE = 13.0" TO 15.0"
"A" = 13.12" "B" = 15.38"

DETAIL 7 — TB1-17 TRANSFORMER BASE

SHAFT DESCRIP.	SHAFT							BASE PLATE				ANCHOR BOLT			
	QTY	VDOT POLE TYPE	POLE BASE TYPE	BASE DIA. (IN)	TOP DIA. (IN)	LGTH. (FT)	WALL THICK (IN)	DIA. "S" (IN)	BOLT CIR. "Y" (IN)	THK. "M" (IN)	HOLE "Z" (IN)	DIA. "K" (IN)	LGTH. "J" (IN)	THRD LGTH "U" (IN)	FOUND. BOLT CIRCLE
6798-2-1	100	LP-1	TB1-17	10.00	3.91	43.5	0.1196	13.5	13.0	1.00	1.25	1.00	36X4	6.0	15.0
6798-2-2	13	LP-2	TB1-17	10.50	4.41	43.5	0.1345	13.5	13.5	1.00	1.25	1.00	36X5	6.0	15.0

NCDOT: C201994 U-4763B
Item No. 4020 &430

NORTH CAROLINA PROFESSIONAL SEAL 20460 ENGINEER ROBERT B. NORRIS

9/22/09

REV.	DATE	REVISION

CUSTOMER:

LOW LEVEL LIGHTING POLES
NC TURNPIKE AUTHORITY
RALEIGH, NC

ATLANTIC TECHNICAL SALES

valmont
Valley, NE 68064 POLES
(402) 359-2201

08/10/09 REV.

6798-2

T & H ELectrical Corp.
Wilson, NC

T & H ELECTRICAL CORPORATION
P.O. BOX 1429
WILSON, N.C. 27894-1429

STATE OF NORTH CAROLINA
DEPARTMENT OF TRANSPORTATION

BEVERLY EAVES PERDUE
GOVERNOR

EUGENE A. CONTI, JR.
SECRETARY

March 15, 2011

MEMORANDUM TO: Raymond Hayes, PE
Mulkey Engineers and Consultants

FROM: Paul Chan, PE
Lighting and Electrical Squad Leader

SUBJECT: Lighting equipment submittal for high mount, low level light standard and underpass lighting
Triangle Parkway from I-40 to Toll NC 540 (TIP U-4763B)
Wake/Durham County

Lighting equipment submittals for high mount, low level light standard and underpass lighting from RKK/Mulkey/T & H Electrical group received on 3/3/11and 3/14/11 have been reviewed with reference to Lighting Scope of Work from page 182-198 of the contract book C201994.

1. GE. # V2FW15S5P1PWAGR and # V2FW25S5A1PWAGR Versaflood II (Item No. 4260) underpass luminaires are acceptable.
2. Holophane # G400HP48LFFVG, # G400HP48LWFVG and # G400HPMTLNFVG (Item No.4090 & 4100) Pole-Top luminaires are acceptable.
3. GE # HMAA75S5A1FSC5 High Mount luminaire and GE ED37 Bulb (Item No.4010) are acceptable.
4. Holophane # LDM-1-1-480NCDOT portable drive motor (Item No. 3990) is acceptable.
5. Knaack Model 42 chest for portable drive motor (Item No. 3990) is acceptable.
6. Carolina High Mast Lowering Device Assembly (8 sheets) (Item No. 4010) is acceptable.

If you have any question please contact Subir Saha or me at 919-250-4016.

PC/SKS/sks

cc.
Timothy McFadden
File

S:\RD11-Haire\Lesqd-Stancil\Projects\Encroachments\U4763B (Triangle Parkway)\rh030811(Submittals).doc

MAILING ADDRESS:
NC DEPARTMENT OF TRANSPORTATION
ROADWAY DESIGN UNIT
1582 MAIL SERVICE CENTER
RALEIGH NC 27699-1582

TELEPHONE: 919-250-4016
FAX: 919-250-4036

WEBSITE: WWW.DOH.DOT.STATE.NC.US

LOCATION:
CENTURY CENTER COMPLEX
BUILDING A
1000 BIRCH RIDGE DRIVE
RALEIGH NC

TIP NO.	SHEET NO.
U-4763B	ES-01A

APPROVED:

DATE:

SEAL

NORTH CAROLINA PROFESSIONAL SEAL 036073 ENGINEER BARRY L. BRANDT

T.I.P.: U-4763B

CONTRACT: C201994

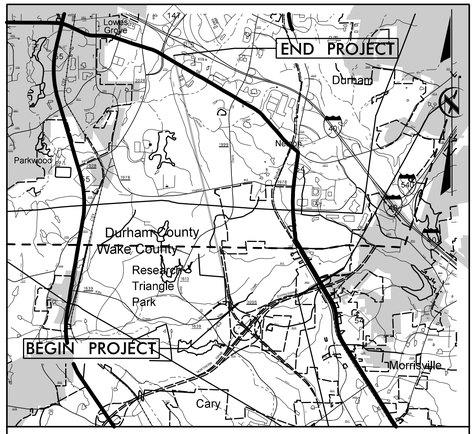

VICINITY MAP

LIGHTING PLANS
WAKE/DURHAM COUNTIES

LOCATION: TRIANGLE PARKWAY FROM I-40 TO TOLL NC 540

TYPE OF WORK: LIGHTING

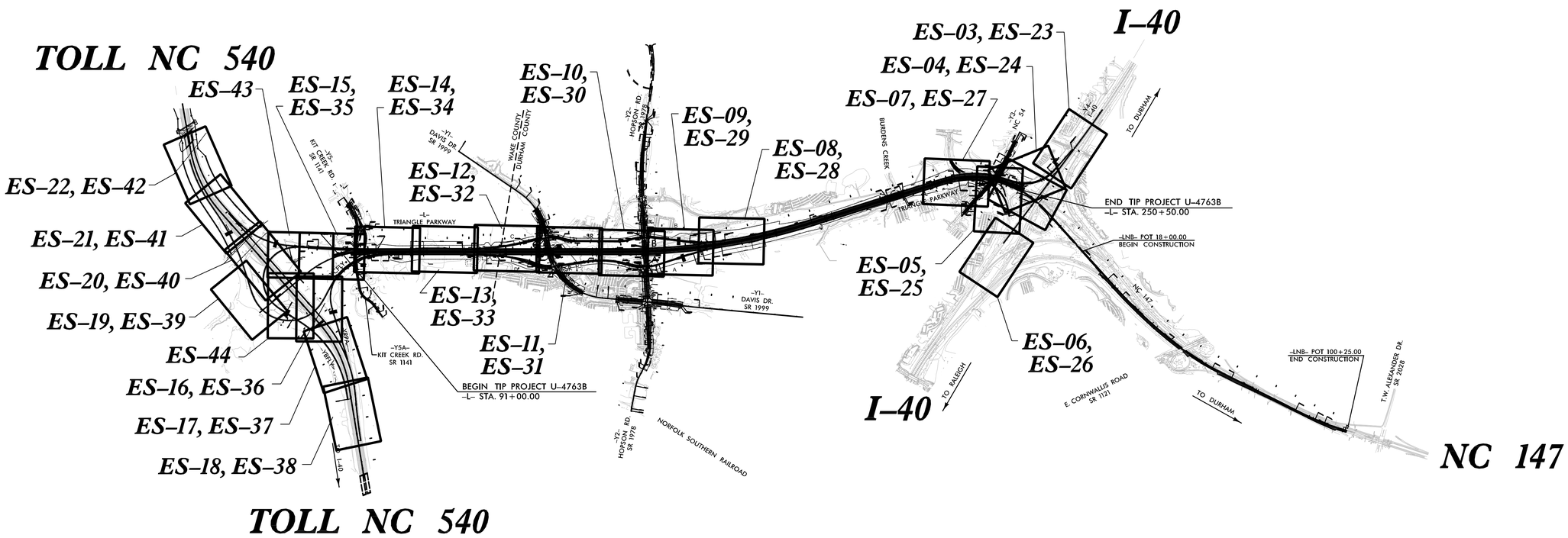

RFC LIGHTING PLANS
SUBMITTAL NO. S-173
DATE: FEBRUARY 14, 2011

CONTRACTOR :

S. T. Wooten Corporation

S.T.WOOTEN CORPORATION
P.O.BOX 2408
3801 BLACK CREEK ROAD
WILSON,NORTH CAROLINA 27894

PLANS PREPARED BY :

RK&K

RUMMEL, KLEPPER & KAHL, LLP
900 RIDGEFIELD DRIVE SUITE 350
RALEIGH, NORTH CAROLINA 27609-3960
(919) 878-9560

FOR THE NORTH CAROLINA TURNPIKE AUTHORITY

INDEX

SHEET NO.	DESCRIPTION
ES-01A	TITLE SHEET
ES-01B	NOTES AND LEGEND
ES-02A	ELECTRICAL DUCT SUMMARY
ES-02B - 02C	JUNCTION BOX SUMMARY
ES-02D	PHOTOMETRIC STATISTICS
ES-02E	PHOTOMETRIC LEGEND & LUMINAIRE SCHEDULES
ES-02F - 02H	PHOTOMETRIC OVERVIEW MAPS
ES-03 - 22	LIGHTING PLANS
ES-23 - 44	LIGHTING PHOTOMETRIC PLANS

R:\CADD\Lighting\u4763_LT_pshES-01A.dgn
2/14/2011

TIP NO.	SHEET NO.
U-4763B	ES-01B

APPROVED: _____

DATE: _____

SEAL

NORTH CAROLINA PROFESSIONAL SEAL 036073 ENGINEER BARRY L. BRANDT

△ NOTES

1. AT THESE LOCATIONS, PROVIDE ELECTRICAL DUCT IN ACCORDANCE WITH NEC REQUIREMENTS FOR AN APPROVED RACEWAY FOR ELECTRICAL CIRCUITS. WHEN MORE THAN ONE CIRCUIT IS INSTALLED IN A SINGLE RACEWAY, A SINGLE EQUIPMENT GROUNDING CONDUCTOR SIZED AS REQUIRED FOR THE LARGEST CIRCUIT SHALL BE USED.
2. LOCATE PROPOSED CONTROL SYSTEM IN AN AREA ACCESSIBLE FOR MAINTENANCE VEHICLES AND OUTSIDE OF CLEAR ZONE AS DEFINED BY THE 2002 AASHTO ROADSIDE DESIGN GUIDE.
3. TYPE PC18 JUNCTION BOX – 18" L X 12" W X 18" H.
4. TYPE PC24 JUNCTION BOX – 18" L X 24" W X 18" H.
5. INSTALL WALL MOUNTED UNDERPASS LUMINAIRE ON FACE OF BRIDGE PIER OR ABUTMENT AT A HEIGHT OF +/- 17 FT, UNLESS OTHERWISE NOTED.
6. INSTALL SPARE ELECTRICAL DUCT AT ALL LOCATIONS WHERE CONDUITS PASS UNDER AN ACTIVE ROADWAY, DRIVEWAY, OR PARKING AREA.

SCOPE OF WORK

PLACE ROADWAY LIGHITNG INTO SERVICE BY DESIGNING, FURNISHING AND INSTALLING HIGH MAST AND POLE TOP STANDARDS WITH HIGH PRESSURE SODIUM LUMINAIRES, UNDERGROUND CIRCUITRY, CONTROL SYSTEMS AND JUNCTION BOXES.

LIGHTING IS INCLUDED AT THE FOLLOWING INTERCHANGES WITH TRIANGLE PARKWAY:
* NC 540 (ONLY THE MOVEMENTS THAT ARE EXISTING OR CONSTRUCTED WITH THIS PROJECT.
* DAVIS DRIVE (SR 1999)/HOPSON ROAD (SR 1978) SPLIT DIAMOND INTERCHANGE, INCLUDING THE SERVICE RAMPS.
* I–40 RAMPS (–Y4RPC– AND –Y4RPD– ONLY).

CONTINUOUS FREEWAY LIGHTING IS NOT REQUIRED ON TRIANGLE PARKWAY.

DESIGN CRITERIA

LIGHTING SCOPE OF WORK – CONTRACT C201994 (U–4763B) REQUEST FOR PROPOSALS

2005 AASHTO ROADWAY LIGHTING DESIGN GUIDE

2001 AASHTO STANDARD SPECIFICATIONS FOR STRUCTURAL SUPPORTS FOR HIGHWAY SIGNS, LUMINAIRES, AND TRAFFIC SIGNALS, AND LATEST INTERIM SPECIFICATIONS VALID AT THE TIME OF LETTING

2008 NATIONAL ELECTRIC CODE

2002 AASHTO ROADSIDE DESIGN GUIDE

FATIGUE CATEGORY II SHALL BE USED IN DESIGN

DESIGN HIGH MOUNT STANDARD FOUNDATION FOR BASIC WIND SPEED OF 110 MPH

ROADWAY STANDARDS

THE FOLLOWING ROADWAY ENGLISH STANDARDS AS APPEAR IN "NCDOT ROADWAY STANDARD DRAWINGS", ROADWAY DESIGN UNIT–N.C. DEPARTMENT OF TRANSPORTATION RALEIGH, N.C., DATED JULY 2006 AND AS MODIFIED BY THE REQUEST FOR PROPOSAL ARE APPLICABLE TO THIS PROJECT AND BY REFERENCE HEREBY ARE CONSIDERED A PART OF THESE PLANS:

STD NO.	TITLE
1401.01	HIGH MOUNT STANDARD
1402.01	HIGH MOUNT FOUNDATION
1403.01	HIGH MOUNT LUMINAIRES
1405.01	STANDARD FOUNDATION
140701	ELECTRIC SERVICE POLE AND LATERAL
1408.01	LIGHT CONTROL SYSTEM
1409.01	ELECTRICAL DUCT
1410.01	FEEDER CIRCUITS
1411.01	ELECTRICAL JUNCTION BOXES
1412.01	UNDERPASS LIGHTING

THE FOLLOWING LIGHTING DESIGN REQUIREMENT DRAWINGS AS REFERENCED IN THE LIGHTING SCOPE OF WORK – CONTRACT C201994 (U–4763B) REQUEST FOR PROPOSALS DATED MAY 28, 2008 ARE APPLICABLE TO THIS PROJECT AND BY REFERENCE HEREBY CONSIDERED A PART OF THESE PLANS:

DWG NO.	TITLE
L–1	INTERCHANGE LIGHTING DESIGN GUIDELINES
L–2	INTERCHANGE LIGHTING DESIGN GUIDELINES
L–3	TOLL PLAZA LIGHTING DESIGN GUIDELINES
L–4	TOLL PLAZA LIGHTING DESIGN GUIDELINES
L–5	LIGHT STANDARD POLE–TOP SINGLE LUMINAIRE
L–6	LIGHT STANDARD POLE–TOP DOUBLE LUMINAIRE
L–7	LIGHT STANDARD POLE–TOP LUMINAIRES

ALL WORK SHALL BE IN CONFORMANCE WITH DIVISION 14 OF THE STANDARD SPECIFICATIONS FOR ROADS AND STRUCTURES, DATED JULY 2006.

LEGEND

- PROPOSED WALL MOUNTED UNDERPASS FIXTURE 150 WATT OR 250 WATT HPS, AS NOTED
- PROPOSED 45' POLE–TOP LIGHT STANDARD 400 WATT, HPS, FULL CUTOFF, DISTRIBUTION TYPE AS NOTED IN LOAD SCHEDULES (TYPE II, III, OR IV)
- PROPOSED 45' DOUBLE POLE–TOP LIGHT STANDARD 400 WATT, HPS, FULL CUTOFF, DISTRIBUTION TYPE AS NOTED IN LOAD SCHEDULES (TYPE II, III, OR IV)
- 4 — PROPOSED 120' HIGH MAST STANDARD W/HM FOUNDATION & (4) HM LUMINAIRES 750W HPS, MEDIUM, CUTOFF, TYPE V
- PROPOSED CONTROL SYSTEM WITH PC24 JUNCTION BOX. BREAKER SIZE SHOWN IN LOAD SCHEDULES.
- JB1 — PROPOSED ELECTRICAL JUNCTION BOX SEE NOTES, THIS SHEET AND TABLE B ON SHEET ES–02B AND ES–02C
- 1 — REFERENCE TO CORRESPONDING NOTE AS NUMBERED
- A1 6 — PROPOSED FEEDER CIRCUIT CONTROL SYSTEM(A), CIRCUIT(1) PLAN SYMBOL (6) SEE TABLE A, THIS SHEET
- 3#1/0 USE 2"C — PROPOSED TRANSFORMER AND SERVICE LATERAL 3#1/0 USE CONDUCTORS 2" CONDUIT
- 2", 3" OR 4" ELEC. DUCT JA & BD — PROPOSED ELECTRICAL DUCT SIZE 2", 3" OR 4" TYPE (JA) OR (BD)

TABLE "A"
CIRCUITRY CONDUCTOR CONDUIT TYPE & SIZE

PLAN SYMBOL	DESCRIPTION		CONTRACT ITEM
8	2#8 Ø 1 #10G 1.5" P	2 AWG SIZE 8 CONDUCTOR (BK & RD) 1 AWG SIZE 10 GROUNDING CONDUCTOR 1.5" PVC CONDUIT	2 – 8 W/G FEEDER CIRCUIT IN 1.5" CONDUIT
*8	2#8 Ø 1 # 10G	2 AWG SIZE 8 CONDUCTOR (BK & RD) 1 AWG SIZE 10 GROUNDING CONDUCTOR	2 – 8 W/G FEEDER CIRCUIT
6	2#6 Ø 1 # 8G 1.5" P	2 AWG SIZE 6 CONDUCTOR (BK & RD) 1 AWG SIZE 8 GROUNDING CONDUCTOR 1.5" PVC CONDUIT	2 – 6 W/G FEEDER CIRCUIT IN 1.5" CONDUIT
*6	2#6 Ø 1 #8G	2 AWG SIZE 6 CONDUCTOR (BK & RD) 1 AWG SIZE 8 GROUNDING CONDUCTOR	2 – 6 W/G FEEDER CIRCUIT
4	2#4 Ø 1 #6G 1.5" P	2 AWG SIZE 4 CONDUCTOR (BK & RD) 1 AWG SIZE 6 GROUNDING CONDUCTOR 1.5" PVC CONDUIT	2 – 4 W/G FEEDER CIRCUIT IN 1.5" CONDUIT
*4	2#4 Ø 1 #6G	2 AWG SIZE 4 CONDUCTOR (BK & RD) 1 AWG SIZE 6 GROUNDING CONDUCTOR	2 – 4 W/G FEEDER CIRCUIT
2	2#2 Ø 1 #4G 1.5" P	2 AWG SIZE 2 CONDUCTOR (BK & RD) 1 AWG SIZE 4 GROUNDING CONDUCTOR 1.5" PVC CONDUIT	2 – 2 W/G FEEDER CIRCUIT IN 1.5" CONDUIT
*2	2#2 Ø 1 #4G	2 AWG SIZE 2 CONDUCTOR (BK & RD) 1 AWG SIZE 4 GROUNDING CONDUCTOR	2 – 2 W/G FEEDER CIRCUIT
1/0	2#1/0 Ø 1 #2G 1.5" P	2 AWG SIZE 1/0 CONDUCTOR (BK & RD) 1 AWG SIZE 2 GROUNDING CONDUCTOR 1.5" PVC CONDUIT	2 – 1/0 W/G FEEDER CIRCUIT IN 1.5" CONDUIT
*1/0	2#1/0 Ø 1 #2G	2 AWG SIZE 1/0 CONDUCTOR (BK & RD) 1 AWG SIZE 2 GROUNDING CONDUCTOR	2 – 1/0 W/G FEEDER CIRCUIT

LUMINAIRE SCHEDULE

TYPE	MANUFACTURER / SERIES	MODEL NO.	LAMP	VOLTAGE	DISTRIBUTION	MOUNTING
POLE TOP LIGHT	HOLOPHANE – MONGOOSE	G400HP48LNFVG	400W HPS	480V	TYPE II	POLE TOP, VERTICAL TENON (SINGLE OR TWIN, AS NOTED ON PLANS)
		G400HP48LWFVG	400W HPS	480V	TYPE III	
		G400HP48LFFVG	400W HPS	480V	TYPE IV	
HIGH MAST LIGHT	GE LIGHTING SYSTEMS – HMAA SERIES	HMAA75S5A1FSC5	750W HPS	480V	TYPE V	HIGH MAST LUMINAIRE RING
UNDERPASS LIGHT	GE LIGHTING SYSTEMS – VERSAFLOOD WALL LIGHTER II	V2FW15S5P1PWAGR	150W HPS	480V	TYPE IV	BRIDGE ABUTMENT OR PIER
		V2FW25S5A1PWAGR	250W HPS	480V	TYPE IV	

ABBREVIATIONS

BD	BURIED	PVC	PVC SCHEDULE 40 CONDUIT
LT	LEFT	RGC	RIGID GALVANIZED STEEL CONDUIT
RT	RIGHT	C	CONDUIT
JA	JACKED	CKT	CIRCUIT
MH	MOUNTING HEIGHT	N	NEUTRAL
Ø	PHASE	G	GROUND
SER LAT	SERVICE LATERAL	HM	HIGH MAST
AL	ARM LENGTH	USE	UNDERGROUND SERVICE ENTRANCE
WM	WALL MOUNT		

PLANS PREPARED BY :

RK&K

RUMMEL, KLEPPER & KAHL, LLP
900 RIDGEFIELD DRIVE SUITE 350
RALEIGH, NORTH CAROLINA 27609–3960
(919) 878–9560

FOR
THE NORTH CAROLINA TURNPIKE AUTHORITY

LIGHTING NOTES AND LEGEND

2/14/2011
\RKK\TRKM_V2008.baltimore.rkk\2008\08103.U-4763B\CADD\Lighting\u4763LT_pshES-01B.dgn

TIP NO.	SHEET NO.
U-4763B	ES-02A

APPROVED: _____

DATE: _____

SEAL

NORTH CAROLINA PROFESSIONAL SEAL 036073 ENGINEER BARRY L. BRANDT

CONTROL SYSTEM "A"

TABLE "C"
ELECTRICAL DUCT SUMMARY (ESTIMATED LENGTH IN FEET)

			TYPE					
			JACKED (JA) FEET			BURIED (BD) FEET		
LOCATION	RACEWAY 1	SHEET	SIZE 3"	SIZE 4"	SIZE 6"	SIZE 2"	SIZE 3"	SIZE 4"
Y7 STA. 146+00 (LT)	JB13 - JB14	ES-20	2@122'					
YBLFY STA. 52+36.2	JB17 - JB18	ES-20	2@54'					
Y7 STA. 152+60.4	JB22 - JB27	ES-20	2@72'					
AB_YCFLY STA. 134+00 (LT)	JB25 - JB33	ES-20	2@150'					
Y7 STA. 147+76.7	JB24 - JB227	ES-20		2@170'		187'		
ABYCFLY STA. 27+10.0	JB35 - JB36	ES-21	2@50'					
Y7RPB STA. 40+03.9	JB05 - JB06	ES-22	2@44'					
TOTALS			984'	340'		187'		

CONTROL SYSTEM "B"

TABLE "C"
ELECTRICAL DUCT SUMMARY (ESTIMATED LENGTH IN FEET)

			TYPE					
			JACKED (JA) FEET			BURIED (BD) FEET		
LOCATION	RACEWAY 1	SHEET	SIZE 3"	SIZE 4"	SIZE 6"	SIZE 2"	SIZE 3"	SIZE 4"
YBFLY STA. 24+34.1	JB88 - JB89	ES-17	2@45'					
YBFLY STA. 17+73.0	JB92 - JB93	ES-17	2@45'					
Y7 STA. 186+94.0	JB108 - JB110	ES-18	2@49'					
Y7 STA. 194+53.0	JB98 - JB109	ES-18	2@215'					
TOTALS			708'					

CONTROL SYSTEM "C"

TABLE "C"
ELECTRICAL DUCT SUMMARY (ESTIMATED LENGTH IN FEET)

			TYPE					
			JACKED (JA) FEET			BURIED (BD) FEET		
LOCATION	RACEWAY 1	SHEET	SIZE 3"	SIZE 4"	SIZE 6"	SIZE 2"	SIZE 3"	SIZE 4"
YCFLY STA. 78+80.0	JB75 - JB76	ES-14	2@68'					
YBFLY STA. 70+25.8	JB59 - JB66	ES-15		2@179'		241'		
YBFLY STA. 67+77.4	JB68 - JB70	ES-15	2@74'					
Y7 STA. 165+52.8	JB45 - JB46	ES-16	2@89'					
Y7 STA. 165+52.8	JB45 - JB69	ES-16	2@68'					
AB_YCFLY STA. 65+06.1	JB52 - JB53	ES-16	2@59'					
TOTALS			716'	358'		241'		

CONTROL SYSTEM "D"

TABLE "C"
ELECTRICAL DUCT SUMMARY (ESTIMATED LENGTH IN FEET)

			TYPE					
			JACKED (JA) FEET			BURIED (BD) FEET		
LOCATION	RACEWAY 1	SHEET	SIZE 3"	SIZE 4"	SIZE 6"	SIZE 2"	SIZE 3"	SIZE 4"
L STA. 136+25.0	JB134 - JB135	ES-11		2@171'		188'		
Y1 STA. 229+73.5	JB127 - JB128	ES-11		2@134'		153'		
SR2 STA. 10+86.7	JB128 - JB129	ES-11		2@83'		96'		
Y1RPD STA. 27+01.4	JB165 - JB166	ES-11	2@89'					
Y1 STA. 235+60.4	JB165 - JB167	ES-11	2@128'					
Y1RPD STA. 19+42.4	JB161 - JB162	ES-12	2@63'					
Y1RPC STA. 21+36.0	JB122 - JB123	ES-12	2@46'					
Y1RPC STA. 27+58.6	JB126 - JB234	ES-12	2@52'					
TOTALS			756'	776'		437'		

CONTROL SYSTEM "E"

TABLE "C"
ELECTRICAL DUCT SUMMARY (ESTIMATED LENGTH IN FEET)

			TYPE					
			JACKED (JA) FEET			BURIED (BD) FEET		
LOCATION	RACEWAY 1	SHEET	SIZE 3"	SIZE 4"	SIZE 6"	SIZE 2"	SIZE 3"	SIZE 4"
Y2RPA STA. 23+69.7	JB181 - JB238	ES-09	2@39'					
Y2RPA STA. 15+86.8	JB185 - JB239	ES-09	2@45'					
Y2RPB STA. 16+63.9	JB145 - JB146	ES-09	2@45'					
L STA. 161+85.0	JB140 - JB170	ES-10		2@155'		169'		
Y2 STA. 61+36.5	JB176 - JB177	ES-10	2@107'					
Y2RPA STA. 27+29.4	JB177 - JB178	ES-10		2@71'		88'		
Y2 STA. 55+50.0	JB138 - JB139	ES-10		2@132'		175'		
TOTALS			472'	716'		432'		

CONTROL SYSTEM "F"

TABLE "C"
ELECTRICAL DUCT SUMMARY (ESTIMATED LENGTH IN FEET)

			TYPE					
			JACKED (JA) FEET			BURIED (BD) FEET		
LOCATION	RACEWAY 1	SHEET	SIZE 3"	SIZE 4"	SIZE 6"	SIZE 2"	SIZE 3"	SIZE 4"
Y4RPC STA. 28+46.3	JB221 - JB222	ES-03	130'					
L STA. 245+16.4	JB208 - JB214	ES-04	2@156'					
Y3 STA. 20+55.9	JB71 - JB73	ES-04	2@93'					
Y4RPD STA. 19+36.7	JB199 - JB240	ES-05	2@37'					
TOTALS			702'					

PLANS PREPARED BY :

RK&K

RUMMEL, KLEPPER & KAHL, LLP
900 RIDGEFIELD DRIVE SUITE 350
RALEIGH, NORTH CAROLINA 27609-3960
(919) 878-9560

FOR
THE NORTH CAROLINA TURNPIKE AUTHORITY

LIGHTING ELECTRICAL DUCT SUMMARY

2/11/2011
\\RK&K\RKKM_V2008\baltimore_rkk\2008\08103_U-4763B\CADD\Lighting\U4763_LT_pshES-02A.dgn

TIP NO.	SHEET NO.
U-4763B	ES-02B

APPROVED: _____

DATE: _____

SEAL

NORTH CAROLINA PROFESSIONAL SEAL 036073 ENGINEER BARRY L. BRANDT

PLANS AND DETAILS FOR PROPOSED LIGHTING / ELECTRICAL CONSTRUCTION

CONTROL SYSTEM "A"

TABLE "B"
JUNCTION BOX SUMMARY

NUMBER	LOCATION	TYPE				SHEET
JB29	AB_YCFLY STA. 43+48.3, 86.4' LT	PC18				ES-19
JB30	AB_YCFLY STA. 45+18.3, 92.7' LT	PC18				ES-19
JB31	AB_YCFLY STA. 47+75.9, 98.8' LT	PC18				ES-19
JB32	AB_YCFLY STA. 49+94.7, 88.8' LT	PC18				ES-19
JB228	YBFLY STA. 45+04.2, 171.5 LT	PC18				ES-19
JB229	AB_YCFLY STA. 51+39.0, 98.5 LT	PC18				ES-19
JB13	Y7 STA. 145+51.9, 96.8' LT	PC18				ES-20
JB14	Y7 STA. 146+87.6, 97.0' LT	PC18				ES-20
JB15	Y7 STA. 149+71.6, 190.4' LT	PC18				ES-20
JB16	Y7 STA. 151+87.6, 188.2' LT	PC18				ES-20
JB17	YBFLY STA. 52+36.2, 30.4' LT	PC18				ES-20
JB18	YBFLY STA. 52+37.7, 42.4' RT	PC18				ES-20
JB19	YBFLY STA. 51+63.1, 220.3' RT	PC18				ES-20
JB20	Y7 STA. 156+92.8, 190.8' LT	PC18				ES-20
JB22	Y7 STA. 152+60.4, 05.7' RT	PC18				ES-20
JB23	Y7RPB STA. 21+17.0, 88.9' LT		PC24			ES-20
JB24	Y7 STA. 147+82.7, 88.8' RT	PC18				ES-20
JB25	Y7 STA. 147+83.7, 173.0' RT	PC18				ES-20
JB26	Y7 STA. 150+15.7, 88.5' RT	PC18				ES-20
JB27	Y7 STA. 152+62.7, 88.8' RT	PC18				ES-20
JB28	YBFLY STA. 46+72.0, 160.3' LT	PC18				ES-20
JB33	AB_YCFLY STA. 32+72.4, 98.6' LT	PC18				ES-20
JB227	Y7 STA. 147+69.6, 97.0' LT		PC24			ES-20
JB7	Y7RPB STA. 37+52.2, 32.0' LT	PC18				ES-21
JB8	Y7RPB STA. 35+04.0, 37.9' LT	PC18				ES-21
JB9	Y7RPB STA. 32+34.8, 37.5' LT	PC18				ES-21
JB10	Y7RPB STA. 29+63.4, 37.4' LT	PC18				ES-21
JB11	Y7 STA. 141+11.5, 101.5' LT	PC18				ES-21
JB12	Y7 STA. 143+35.1, 97.9' LT	PC18				ES-21
JB34	Y7 STA. 142+30.0, 125.8' RT	PC18				ES-21
JB35	AB_YCFLY STA. 27+10.0, 23.4' LT	PC18				ES-21
JB36	AB_YCFLY STA. 27+10.0, 38.2' RT	PC18				ES-21
JB37	AB_YCFLY STA. 25+56.0, 43.8' RT	PC18				ES-21
JB38	AB_YCFLY STA. 23+52.7, 43.7' RT	PC18				ES-21
JB39	AB_YCFLY STA. 20+97.4, 43.8' RT	PC18				ES-21
JB40	AB_YCFLY STA. 18+39.9, 43.6' RT	PC18				ES-21
JB226	Y7 STA. 144+16.4, 153.8' LT	PC18				ES-21
JB1	Y7_RPB STA. 48+75.1, 36.3' RT	PC18				ES-22
JB2	Y7_RPB STA. 46+30.7, 34.8' RT	PC18				ES-22
JB3	Y7_RPB STA. 44+42.5, 34.8' RT	PC18				ES-22
JB4	Y7_RPB STA. 42+51.0, 34.9' RT	PC18				ES-22
JB5	Y7_RPB STA. 40+03.9, 34.7' RT	PC18				ES-22
JB6	Y7_RPB STA. 40+03.8, 22.3' LT	PC18				ES-22
JB41	AB_YCFLY STA. 15+84.8, 43.6' RT	PC18				ES-22
JB225	NOT USED					
TOTALS		42	2			

CONTROL SYSTEM "B"

TABLE "B"
JUNCTION BOX SUMMARY

NUMBER	LOCATION	TYPE				SHEET
JB49	YBFLY STA. 28+91.2, 95.3' RT	PC18				ES-16
JB55	YBFLY STA. 26+59.7, 59.5' RT	PC18				ES-17
JB56	Y7 STA. 175+07.8, 96.1' LT	PC18				ES-17
JB57	YRPA STA. 40+04.0, 73.1' LT	PC18				ES-17
JB88	YBFLY STA. 24+34.1, 30.4' LT	PC18				ES-17
JB89	YBFLY STA. 24+34.7, 26.7' RT	PC18				ES-17
JB90	YBFLY STA. 22+16.7, 55.2' RT	PC18				ES-17
JB91	YBFLY STA. 20+12.2, 40.3' RT	PC18				ES-17
JB92	YBFLY STA. 17+73.0, 25.6' RT	PC18				ES-17
JB93	YBFLY STA. 17+68.8, 30.4' LT	PC18				ES-17
JB94	YBFLY STA. 15+31.0, 39.4' LT	PC18				ES-17
JB95	YBFLY STA. 13+51.0, 39.8' LT	PC18				ES-17
JB111	Y7 STA. 182+25.6, 97.7' LT	PC18				ES-17
JB112	Y7 STA. 179+85.2, 98.1' LT	PC18				ES-17
JB232	Y7 STA. 184+63.8, 97.7' LT	PC18				ES-17
JB233	Y7 STA. 177+47.6, 99.8' LT	PC18				ES-17
JB96	YBFLY STA. 11+71.1, 38.5' LT	PC18				ES-18
JB97	Y7 STA. 190+43.4, 115.5' RT	PC18				ES-18
JB98	Y7 STA. 194+50.0, 114.2' RT	PC18				ES-18
JB99	Y7 STA. 192+53.1, 115.3' RT	PC18				ES-18
JB100	Y7 STA. 195+04.3, 114.1' RT	PC18				ES-18
JB101	Y7 STA. 197+44.0, 104.3' RT	PC18				ES-18
JB102	Y7 STA. 200+29.9, 99.0' LT	PC18				ES-18
JB103	Y7 STA. 197+72.2, 103.4' LT	PC18				ES-18
JB104	Y7 STA. 195+19.1, 111.2' LT	PC18				ES-18
JB105	Y7 STA. 193+19.6, 120.6' LT	PC18				ES-18
JB106	Y7 STA. 191+46.8, 132.2' LT	PC18				ES-18
JB107	Y7 STA. 189+27.3, 144.9' LT	PC18				ES-18
JB108	Y7 STA. 186+94.0, 154.8' LT	PC18				ES-18
JB109	Y7 STA. 194+56.0, 114.2' LT		PC24			ES-18
JB110	Y7 STA. 186+94.0, 96.4' LT	PC18				ES-18
TOTALS		30	1			

CONTROL SYSTEM "C"

TABLE "B"
JUNCTION BOX SUMMARY

NUMBER	LOCATION	TYPE				SHEET
JB113	L STA. 109+89.7, 108.0' LT	PC18				ES-13
JB152	L STA. 109+90.0, 108.0' RT	PC18				ES-13
JB75	YCFLY STA. 78+84.4, 49.1' LT	PC18				ES-14
JB76	YCFLY STA. 78+77.6, 46.9' RT	PC18				ES-14
JB77	YCFLY STA. 80+21.5, 49.0' RT	PC18				ES-14
JB78	YCFLY STA. 82+75.3, 59.9' RT	PC18				ES-14
JB79	YCFLY STA. 85+41.6, 71.5' RT	PC18				ES-14
JB80	L STA. 104+72.8, 107.9' RT	PC18				ES-14
JB81	L STA. 107+32.2, 108.0' RT	PC18				ES-14
JB82	YBFLY STA. 72+39.0, 52.2' LT	PC18				ES-14
JB83	YBFLY STA. 73+83.9, 72.0' LT	PC18				ES-14
JB84	L STA. 99+44.3, 108.0' LT	PC18				ES-14
JB85	L STA. 102+08.0, 108.0' LT	PC18				ES-14
JB86	L STA. 104+71.0, 108.0' LT	PC18				ES-14
JB87	L STA. 107+33.1, 108.0' LT	PC18				ES-14
JB59	YBFLY STA. 70+25.8, 50.0' LT		PC24			ES-15
JB62	YCFLY STA. 71+11.9, 28.6' LT	PC18				ES-15
JB63	YCFLY STA. 73+50.0, 24.8' LT	PC18				ES-15
JB64	YBFLY STA. 64+61.5, 34.4' RT	PC18				ES-15
JB65	YBFLY STA. 66+00.0, 35.6' RT	PC18				ES-15
JB66	YCFLY STA. 76+65.3, 90.1' LT		PC24			ES-15
JB67	YCFLY STA. 75+80.3, 28.8' LT	PC18				ES-15
JB68	YBFLY STA. 67+76.7, 38.5' RT	PC18				ES-15
JB70	YBFLY STA. 67+77.4, 49.0' LT		PC24			ES-15
JB72	YBFLY STA. 61+99.3, 35.6' RT	PC18				ES-15
JB74	YBFLY STA. 59+50.9, 36.0' RT	PC18				ES-15
JB231	YBFLY STA. 58+51.5, 74.7 RT	PC18				ES-15
JB42	Y7 STA. 162+17.4, 183.3' LT	PC18				ES-16
JB43	Y7 STA. 163+56.2, 183.3' LT	PC18				ES-16
JB44	Y7 STA. 165+52.0, 178.0' LT	PC18				ES-16
JB45	Y7 STA. 165+52.8, 09.6' LT	PC18				ES-16
JB46	Y7 STA. 165+53.2, 98.4' RT	PC18				ES-16
JB47	Y7 STA. 165+67.8, 181.5' RT	PC18				ES-16
JB48	AB_YCFLY STA. 57+78.0, 34.0' LT	PC18				ES-16
JB50	Y7 STA. 167+82.9, 09.6' LT	PC18				ES-16
JB51	AB_YCFLY STA. 65+65.4, 228.6' LT	PC18				ES-16
JB52	AB_YCFLY STA. 65+06.1, 36.3' LT	PC18				ES-16
JB53	AB_YCFLY STA. 65+03.7, 37.8' RT	PC18				ES-16
JB54	YRPA STA. 46+14.4, 68.1' LT	PC18				ES-16
JB58	YCFLY STA. 67+57.2, 95.8' LT	PC18				ES-16
JB60	YCFLY STA. 69+76.7, 27.1' LT	PC18				ES-16
JB69	Y7 STA. 165+52.8, 93.8' LT	PC18				ES-16
JB230	NOT USED					
TOTALS		39	3			

PLANS PREPARED BY :

RK&K

RUMMEL, KLEPPER & KAHL, LLP
900 RIDGEFIELD DRIVE SUITE 350
RALEIGH, NORTH CAROLINA 27609-3960
(919) 878-9560

FOR
THE NORTH CAROLINA TURNPIKE AUTHORITY

LIGHTING JUNCTION BOX SUMMARY

2/14/2011
\\RKK\RKKM_V2008.baltimore.rkk\2008\08103.U-4763B\CADD\Lighting\U4763_LT_pshES_02B.dgn

TIP NO.	SHEET NO.
U-4763B	ES-02C

APPROVED: _____

DATE: _____

SEAL

NORTH CAROLINA PROFESSIONAL SEAL 036073 ENGINEER BARRY L. BRANDT

PLANS AND DETAILS FOR PROPOSED LIGHTING / ELECTRICAL CONSTRUCTION

CONTROL SYSTEM "D"

TABLE "B"
JUNCTION BOX SUMMARY

NUMBER	LOCATION	TYPE				SHEET
JB21	Y1 STA. 231+60.7, 73.4' RT	PC18				ES-11
JB61	Y1 STA. 231+88.8, 71.6' LT	PC18				ES-11
JB127	Y1RPC STA. 28+67.4, 35.9' RT		PC24			ES-11
JB128	SR2 STA. 10+86.7, 46.9' RT		PC24			ES-11
JB129	SR2 STA. 10+80.6, 49.4' LT		PC24			ES-11
JB130	SR2 STA. 13+90.9, 51.5' RT	PC18				ES-11
JB131	SR2 STA. 15+94.8, 39.8' RT	PC18				ES-11
JB132	SR2 STA. 18+41.0, 35.0' RT	PC18				ES-11
JB133	SR2 STA. 20+74.4, 35.0' RT	PC18				ES-11
JB134	L STA. 136+25.0, 88.3' LT	PC18				ES-11
JB135	L STA. 136+25.0, 99.0' RT	PC18				ES-11
JB235	SR2 STA. 12+61.0, 64.3' RT	PC18				ES-11
JB164	Y1RPD STA. 24+24.8, 137.9' LT	PC18				ES-11
JB165	Y1RPD STA. 27+01.4, 49.0' LT	PC18				ES-11
JB166	Y1RPD STA. 27+13.8, 56.8' RT	PC18				ES-11
JB167	SR1 STA. 10+59.3, 69.8' LT	PC18				ES-11
JB168	SR1 STA. 12+76.1, 76.0' LT	PC18				ES-11
JB169	SR1 STA. 15+16.8, 82.9' LT	PC18				ES-11
JB237	Y1 STA. 237+25.9, 66.5' RT	PC18				ES-11
JB118	Y1RPC STA. 14+08.3, 49.0' LT	PC18				ES-12
JB119	Y1RPC STA. 15+93.4, 49.0' LT	PC18				ES-12
JB120	Y1RPC STA. 17+87.6, 49.0' LT	PC18				ES-12
JB121	Y1RPC STA. 19+80.1, 49.0' LT	PC18				ES-12
JB122	Y1RPC STA. 21+36.0, 36.6' LT	PC18				ES-12
JB123	Y1RPC STA. 21+38.3, 19.7' RT	PC18				ES-12
JB124	Y1RPC STA. 23+67.0, 76.6' RT	PC18				ES-12
JB125	Y1RPC STA. 25+99.5, 16.8' RT	PC18				ES-12
JB126	Y1RPC STA. 27+58.6, 16.7' RT	PC18				ES-12
JB157	Y1RPD STA. 11+02.7, 44.6' RT	PC18				ES-12
JB158	Y1RPD STA. 13+33.4, 48.0' RT	PC18				ES-12
JB159	Y1RPD STA. 15+23.8, 47.6' RT	PC18				ES-12
JB160	Y1RPD STA. 17+18.4, 38.7' RT	PC18				ES-12
JB161	Y1RPD STA. 19+42.4, 48.6' RT	PC18				ES-12
JB162	Y1RPD STA. 19+43.9, 32.9' LT	PC18				ES-12
JB163	Y1RPD STA. 21+73.0, 76.7' LT	PC18				ES-12
JB234	Y1RPC STA. 27+58.6, 46.4' LT	PC18				ES-12
JB114	L STA. 112+53.2, 108.0' LT	PC18				ES-13
JB115	L STA. 115+17.8, 108.0' LT	PC18				ES-13
JB116	L STA. 117+80.6, 108.0' LT	PC18				ES-13
JB117	Y1RPC STA. 11+78.1, 49.0' LT	PC18				ES-13
JB153	L STA. 112+51.3, 108.0' RT	PC18				ES-13
JB154	L STA. 115+12.3, 108.0' RT	PC18				ES-13
JB155	L STA. 117+76.8, 108.0' RT	PC18				ES-13
JB156	L STA. 120+40.0, 108.0' RT	PC18				ES-13
JB236	NOT USED					
TOTALS		41	3			

CONTROL SYSTEM "E"

TABLE "B"
JUNCTION BOX SUMMARY

NUMBER	LOCATION	TYPE				SHEET
JB147	Y2RPB STA. 14+79.2, 34.9' RT	PC18				ES-08
JB148	Y2RPB STA. 12+89.7, 38.0' RT	PC18				ES-08
JB149	Y2RPB STA. 10+38.1, 42.5' RT	PC18				ES-08
JB150	L STA. 181+48.2, 92.0' LT	PC18				ES-08
JB151	L STA. 184+09.5, 89.5' LT	PC18				ES-08
JB186	Y2RPA STA. 14+15.6, 44.0' LT	PC18				ES-08
JB187	Y2RPA STA. 12+22.1, 37.0' LT	PC18				ES-08
JB188	L STA. 178+47.2, 97.0' RT	PC18				ES-08
JB189	L STA. 181+04.1, 97.0' RT	PC18				ES-08
JB190	L STA. 183+67.2, 97.0' RT	PC18				ES-08
JB191	L STA. 186+38.5, 97.0' RT	PC18				ES-08
JB141	Y2RPB STA. 25+17.9, 36.0' LT	PC18				ES-09
JB142	Y2RPB STA. 22+86.6, 36.2' LT	PC18				ES-09
JB143	Y2RPB STA. 20+36.8, 36.1' LT	PC18				ES-09
JB144	Y2RPB STA. 18+00.0, 36.0' LT	PC18				ES-09
JB145	Y2RPB STA. 16+63.9, 20.5' LT	PC18				ES-09
JB146	Y2RPB STA. 16+63.9, 39.0' RT	PC18				ES-09
JB179	Y2RPA STA. 25+46.0, 41.9' RT	PC18				ES-09
JB180	Y2RPA STA. 23+69.7, 92.9' RT	PC18				ES-09
JB181	Y2RPA STA. 23+69.7, 35.0' LT	PC18				ES-09
JB182	Y2RPA STA. 21+32.8, 35.0' LT	PC18				ES-09
JB183	Y2RPA STA. 18+86.7, 82.6' LT	PC18				ES-09
JB184	Y2RPA STA. 17+58.3, 95.5' LT	PC18				ES-09
JB185	Y2RPA STA. 15+86.8, 33.7' LT	PC18				ES-09
JB238	Y2RPA STA. 23+69.7, 20.9' RT	PC18				ES-09
JB239	Y2PRA STA. 15+86.8, 20.8' RT	PC18				ES-09
JB136	SR2 STA. 27+87.0, 39.9' RT	PC18				ES-10
JB137	SR2 STA. 30+06.6, 58.7' RT	PC18				ES-10
JB138	SR2 STA. 32+28.4, 36.1' RT	PC18				ES-10
JB139	Y2RPB STA. 27+56.6, 35.9' LT		PC24			ES-10
JB140	L STA. 161+85.0, 84.0' LT	PC18				ES-10
JB170	L STA. 161+85.0, 85.0' RT	PC18				ES-10
JB172	SR1 STA. 22+30.0, 64.5' LT	PC18				ES-10
JB173	SR1 STA. 24+48.9, 52.3' LT	PC18				ES-10
JB174	SR1 STA. 26+83.1, 89.5' LT	PC18				ES-10
JB175	SR1 STA. 28+95.8, 125.7' LT	PC18				ES-10
JB176	SR1 STA. 30+75.0, 41.2' LT	PC18				ES-10
JB177	Y2RPA STA. 27+29.4, 39.8' RT		PC24			ES-10
JB178	Y2RPA STA. 27+27.4, 47.9' LT		PC24			ES-10
JB171	NOT USED					
TOTALS		36	3			

CONTROL SYSTEM "F"

TABLE "B"
JUNCTION BOX SUMMARY

NUMBER	LOCATION	TYPE				SHEET
JB219	Y4RPC STA. 23+76.3, 34.9' LT	PC18				ES-03
JB220	Y4RPC STA. 26+29.8, 41.9' LT	PC18				ES-03
JB221	Y4RPC STA. 28+46.3, 36.4' LT	PC18				ES-03
JB222	Y4 STA. 514+37.0, 58.1' RT	PC18				ES-03
JB223	Y4 STA. 511+59.3, 55.7' RT	PC18				ES-03
JB224	Y4 STA. 508+78.9, 53.3' RT	PC18				ES-03
JB71	Y3 STA. 20+55.9, 51.1' RT	PC18				ES-04
JB73	Y3 STA. 20+34.9, 48.6' LT	PC18				ES-04
JB208	L STA. 245+16.4, 82.7' RT	PC18				ES-04
JB213	Y4RPC STA. 10+06.0, 37.0' LT	PC18				ES-04
JB214	Y4RPC STA. 10+73.7, 36.9' LT	PC18				ES-04
JB215	Y4RPC STA. 12+07.6, 37.5' LT	PC18				ES-04
JB216	Y4RPC STA. 14+48.0, 37.3' LT	PC18				ES-04
JB217	Y4RPC STA. 17+53.1, 35.0' LT	PC18				ES-04
JB218	Y4RPC STA. 20+67.0, 35.1' LT	PC18				ES-04
JB242	Y4RPC STA. 15+86.8, 35.1' LT	PC18				ES-04
JB243	Y4RPC STA. 19+13.4, 35.1' LT	PC18				ES-04
JB196	Y4RPD STA. 15+91.0, 37.1' RT	PC18				ES-05
JB197	Y4RPD STA. 18+07.2, 37.1' RT	PC18				ES-05
JB199	Y4RPD STA. 19+36.7, 37.0' RT	PC18				ES-05
JB200	Y4RPD STA. 22+47.4, 37.2' RT	PC18				ES-05
JB201	Y4RPD STA. 25+79.4, 36.4' RT	PC18				ES-05
JB202	X=2037716.9564, Y=782168.4677	PC18				ES-05
JB212	L STA. 242+26.0, 101.0' LT	PC18				ES-05
JB240	Y4RPD STA. 19+34.7, 18.0' LT	PC18				ES-05
JB241	Y4RPD STA. 20+97.6, 37.0' RT	PC18				ES-05
JB203	X=2037977.2511, Y=782119.8359	PC18				ES-06
JB204	X=2038186.7015, Y=782019.1469	PC18				ES-06
JB205	X=2038412.1689, Y=781900.3846	PC18				ES-06
JB206	X=2038644.0763, Y=781778.8111	PC18				ES-06
JB207	X=2038875.1060, Y=781661.7942	PC18				ES-06
JB192	L STA. 230+29.6, 84.0' RT	PC18				ES-07
JB193	L STA. 233+10.8, 84.1' RT	PC18				ES-07
JB194	Y4RPD STA. 10+77.8, 37.0' RT	PC18				ES-07
JB195	Y4RPD STA. 13+35.3, 37.0' RT	PC18				ES-07
JB209	L STA. 234+19.6, 91.6' LT	PC18				ES-07
JB210	L STA. 236+88.4, 101.0' LT	PC18				ES-07
JB211	L STA. 239+60.8, 101.0' LT	PC18				ES-07
JB198	NOT USED					
TOTALS		38				

PLANS PREPARED BY :
RK&K
RUMMEL, KLEPPER & KAHL, LLP
900 RIDGEFIELD DRIVE SUITE 350
RALEIGH, NORTH CAROLINA 27609-3960
(919) 878-9560
FOR
THE NORTH CAROLINA TURNPIKE AUTHORITY

LIGHTING JUNCTION BOX SUMMARY

2/14/2011
\\RKK\RKKM_V2008.baltimore.rkk\2008\08103.U-4763B\CADD\Lighting\U4763.LT_pshES-02C.dgn

TIP NO.	SHEET NO.
U-4763B	ES-02D

APPROVED: _____

DATE: _____

SEAL

NORTH CAROLINA PROFESSIONAL SEAL 036073 ENGINEER BARRY L. BRANDT

PHOTOMETRIC STATISTICS

PHOTOMETRIC CRITERIA:
AVERAGE - 0.7 TO 0.9 FC
AVERAGE TO MIN - < 4:1
MIN - 0.2 FC

I-40 INTERCHANGE STATISTICS

Description	Symbol	Avg	Max	Min	Max/Min	Avg/Min
I-40 EB at Accel Lane -Y4- 542+00 to end of accel lane	+	0.86 fc	2.94 fc	0.23 fc	12.8:1	3.7:1
I-40 EB at Decel Lane -Y4- 507+70 to -Y4- 520+00	+	0.80 fc	3.56 fc	0.20 fc	17.8:1	4.0:1
NB TriPkwy -L- 229+40 to -L-247+40	+	0.80 fc	2.92 fc	0.24 fc	12.2:1	3.3:1
Ramp - I-40 to SB TriPkwy -Y4RPC- 12+90 to -Y4RPC- 25+30	+	0.75 fc	3.08 fc	0.23 fc	13.4:1	3.3:1
Ramp - NB TriPkwy to I-40 -Y4RPD- 14+45 to -Y4- 542+00	+	0.90 fc	2.92 fc	0.25 fc	11.7:1	3.6:1
SB TriPkwy -L- 233+55 to -L- 239+55	+	0.79 fc	3.64 fc	0.20 fc	18.2:1	4.0:1

HOPSON-DAVIS INTRECHANGE STATISTICS

Description	Symbol	Avg	Max	Min	Max/Min	Avg/Min
Davis Dr @ NB Ramps -Y1- 235+15 to -Y1- 238+05	+	0.72 fc	3.60 fc	0.26 fc	13.8:1	2.8:1
Davis Dr @ SB Ramps -Y1- 227+75 to -Y1-230+60	+	0.87 fc	3.67 fc	0.25 fc	14.7:1	3.5:1
Davis Dr Btwn Ramps (Under TriPkwy) -Y1- 230+60 to -Y1-235+15	+	0.70 fc	2.36 fc	0.28 fc	9.4:1	2.5:1
Hopson @ NB Ramps -Y2- 53+70 to -Y2- 56+30	+	0.81 fc	3.81 fc	0.26 fc	14.7:1	3.1:1
Hopson @ SB Ramps -Y2- 60+60 to -Y2- 63+50	+	0.74 fc	1.03 fc	0.25 fc	4.1:1	3.0:1
NB SERVICE DAVIS TO HOPSON -SR1- 10+50 to -SR1- 30+80	+	0.75 fc	3.07 fc	0.22 fc	14.0:1	3.4:1
NB OFF RAMP TO DAVIS -Y1RPD- 10+00 to -Y1RPD- 27+45	+	0.71 fc	3.60 fc	0.20 fc	18.0:1	3.6:1
NB ON RAMP TO TriPkwy TO I-40 -L- 184+40 to -Y2RPA- 27+60	+	0.84 fc	3.58 fc	0.26 fc	13.8:1	3.2:1
NB Tri Pkwy to I-40 -L- 161+00 to -L- 186+60	+	0.78 fc	3.04 fc	0.21 fc	14.5:1	3.7:1
NB TriPkwy DAVIS TO HOPSON -L- 138+00 to -L- 161+00	+	0.82 fc	2.18 fc	0.27 fc	8.1:1	3.0:1
NB TriPkwy TO DAVIS -L- 106+70 to -L- 138+00	+	0.74 fc	2.93 fc	0.27 fc	10.9:1	2.7:1
SB SERVICES HOPSON TO DAVIS -SR2- 10+50 to -SR2- 32+40	+	0.70 fc	1.03 fc	0.25 fc	4.1:1	2.8:1
SB OFF RAMP TO HOPSON -L- 161+00 to -L-185+30	+	0.82 fc	3.68 fc	0.23 fc	16.0:1	3.6:1
SB ON Ramp from Davis -Y1RPC- 12+85 to -Y1RPC- 28+70	+	0.98 fc	3.62 fc	0.27 fc	13.4:1	3.6:1
SB TriPkwy from Davis -L- 106+70 to -L- 138+00	+	0.70 fc	2.95 fc	0.24 fc	12.3:1	2.9:1
SB TriPkwy Hopson to Davis -L- 138+00 to -L- 161+00	+	0.84 fc	2.35 fc	0.31 fc	7.6:1	2.7:1
SB TriPkwy To Hopson -Y2RPB- 10+00 to -Y2RPB- 28+30	+	0.80 fc	3.01 fc	0.22 fc	13.7:1	3.6:1

NC 540 INTERCHANGE STATISTICS

Description	Symbol	Avg	Max	Min	Max/Min	Avg/Min
NC540 EB -Y7- 128+00 to -Y7- 150+00	+	0.77 fc	2.94 fc	0.21 fc	14.0:1	3.7:1
NC540 EB -Y7- 150+00 to -Y7- 170+00	+	0.75 fc	5.66 fc	0.25 fc	22.6:1	3.0:1
NC540 EB -Y7- 170+00 to -Y7- 198+00	+	0.73 fc	4.57 fc	0.23 fc	19.9:1	3.2:1
NC540 WB -Y7- 118+80 to -Y7- 150+00	+	0.92 fc	4.58 fc	0.23 fc	19.9:1	4.0:1
NC540 WB -Y7- 150+00 to -Y7- 170+00	+	0.74 fc	4.15 fc	0.36 fc	11.5:1	2.1:1
NC540 WB -Y7- 170+00 to -Y7- 201+00	+	0.93 fc	4.49 fc	0.24 fc	18.7:1	3.9:1
Y7-RPB -Y7_RPB- 14+50 to -Y7_RPB- 49+20	+	0.90 fc	4.76 fc	0.24 fc	19.8:1	3.8:1
YBFLY -YBFLY- 55+10 TO -Y7- 198+05	+	1.04 fc	5.44 fc	0.27 fc	20.1:1	3.9:1
YBFLY / RPB -L- 106+70 to -Y7_RPB- 14+50	+	0.76 fc	2.95 fc	0.26 fc	11.3:1	2.9:1
YCFLY -AB_YCFLY- 22+80 to -YCFLY- 68+85	+	0.83 fc	5.89 fc	0.26 fc	22.7:1	3.2:1
YCFLY/YRPA -YCFLY- 68+85 to -L- 106+70	+	0.82 fc	3.20 fc	0.22 fc	14.5:1	3.7:1
YRPA -Y7- 189+50 to -YRPA- 50+50	+	0.86 fc	3.59 fc	0.24 fc	15.0:1	3.6:1

PLANS PREPARED BY :
RK&K
RUMMEL, KLEPPER & KAHL, LLP
900 RIDGEFIELD DRIVE SUITE 350
RALEIGH, NORTH CAROLINA 27609-3960
(919) 878-9560
FOR
THE NORTH CAROLINA TURNPIKE AUTHORITY

PHOTOMETRIC STATISTICS

2/13/2011
\\RKK\RKKM_V2008\baltimore-rkk\2008\08103.U-4763B\CADD\Lighting\U4763_LT_pshES_02D.dgn

TIP NO.	SHEET NO.
U-4763B	ES-02E

APPROVED: _____

DATE: _____

SEAL

NORTH CAROLINA PROFESSIONAL SEAL 036073 ENGINEER BARRY L. BRANDT

PHOTOMETRIC LEGEND & LUMINAIRE SCHEDULES

I-40 INTERCHANGE LUMINAIRE SCHEDULE

Symbol	Label	Qty	Catalog Number	Description	Lamp	File	Lumens	LLF	Watts
	40-T2	9	G400HP00LNFXXX	MONGOOSE	400W CLEAR HPS	49257.ies	50000	0.72	400
	40-T3	18	G400HP00LWFXXX	MONGOOSE	400W CLEAR HPS	49396.ies	50000	0.72	400
	40-T4	2	G400HP00LFFXXX	MONGOOSE	400W CLEAR HPS	51419.ies	50000	0.72	400

HOPSON-DAVIS INTERCHANGE LUMINAIRE SCHEDULE

Symbol	Label	Qty	Catalog Number	Description	Lamp	File	Lumens	LLF	Watts
	40-T3	23	G400HP00LWFXXX	MONGOOSE	400W CLEAR HPS	49396.ies	50000	0.72	400
	40-T4	13	G400HP00LFFXXX	MONGOOSE	400W CLEAR HPS	51419.ies	50000	0.72	400
	4GE75	11	HMAA75S***GSC5	HIGH MAST	1; 750W HPS, CLEAR ED37, VBU	GE452710.IES	110000	0.72	3364
	15-WM	6	V2FW15S***PWA**	VERSAFLOOD II WALLIGHTER	1; 150W HPS, CLEAR ED23.5, VBU	GE178578.IES	16000	0.72	150

NC 540 INTERCHANGE LUMINAIRE SCHEDULE

Symbol	Label	Qty	Catalog Number	Description	Lamp	File	Lumens	LLF	Watts
	40-T2	1	G400HP00LNFXXX	MONGOOSE	400W CLEAR HPS	49257.ies	50000	0.72	400
	40-T3	24	G400HP00LWFXXX	MONGOOSE	400W CLEAR HPS	49396.ies	50000	0.72	400
	40-T4	10	G400HP00LFFXXX	MONGOOSE	400W CLEAR HPS	51419.ies	50000	0.72	400
	15-WM	2	V2FW15S***PWA**	VERSAFLOOD II WALLIGHTER	1; 150W HPS, CLEAR ED23.5, VBU	GE178578.IES	16000	0.72	150
	25-WM	6	V2FW40S***PWA**	VERSAFLOOD II WALLIGHTER	250W HPS, CLEAR ED18, VBU	GE178577.IES	28000	0.72	250
	4GE75	17	HMAA75S***GSC5	HIGH MAST	1; 750W HPS, CLEAR ED37, VBU	GE452710.IES	110000	0.72	3364
	40TW4	2	G400HP00LFFXXX	MONGOOSE - TWIN ARM, TYPE IV	400W CLEAR HPS	51419.ies	50000	0.72	800
	40TW3	11	G400HP00LWFXXX	MONGOOSE - TWIN ARM, TYPE III	400W CLEAR HPS	49396.ies	50000	0.72	800

LEGEND

SYMBOL	DIST. TYPE	POLE HEIGHT
	TYPE 3 (SINGLE)	45 ft.
	TYPE 3 (TWIN)	45 ft.
	TYPE 4 (SINGLE)	45 ft.
	TYPE 4 (TWIN)	45 ft.
	TYPE 5	120 ft.
	UNDERPASS LUMINAIRE	VARIES

LUMINAIRE TEMPLATE:
OUTER RING - 0.2 FC
MIDDLE RING - 0.5 FC
INNER RING - 1.0 FC

PLANS PREPARED BY :

RK&K

RUMMEL, KLEPPER & KAHL, LLP
900 RIDGEFIELD DRIVE SUITE 350
RALEIGH, NORTH CAROLINA 27609-3960
(919) 878-9560
FOR
THE NORTH CAROLINA TURNPIKE AUTHORITY

PHOTOMETRIC LEGEND & LUMINAIRE SCHEDULES

2/14/2011
\\rkk\RKKM_V2008\baltimore-rkk\2008\08103_U-4763B\CADD\Lighting\U4763_LT_pshES-02E.dgn

TIP NO.	SHEET NO.
U-4763B	ES-02H

APPROVED: _____

DATE: _____

SEAL

NORTH CAROLINA PROFESSIONAL SEAL 036073 ENGINEER BARRY L. BRANDT

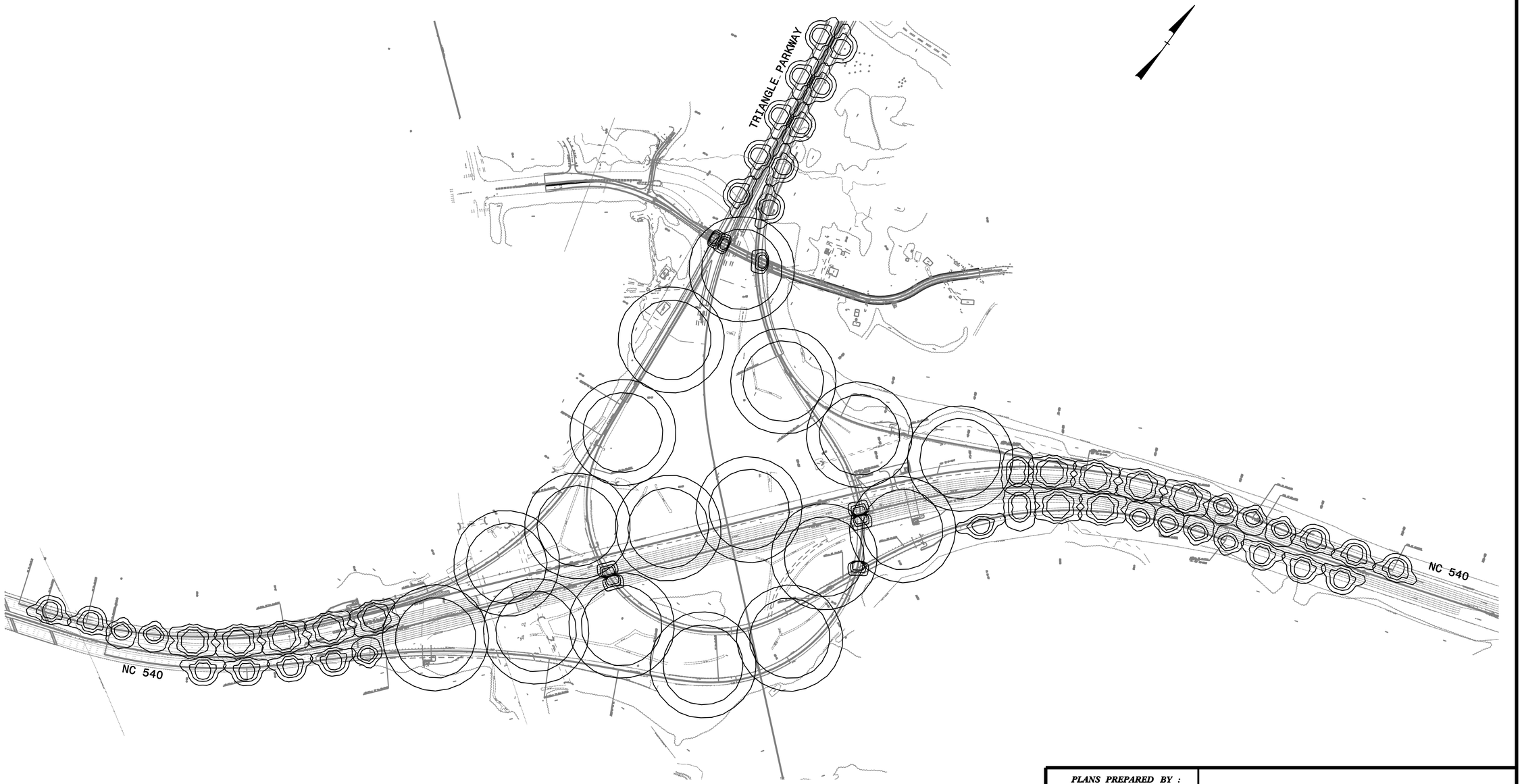

PLANS PREPARED BY :

RK&K

RUMMEL, KLEPPER & KAHL, LLP
900 RIDGEFIELD DRIVE SUITE 350
RALEIGH, NORTH CAROLINA 27609-3960
(919) 878-9560

FOR
THE NORTH CAROLINA
TURNPIKE AUTHORITY

NC 540 INTERCHANGE PHOTOMETRIC OVERVIEW

2/14/2011
\\RKK\RKKM\V2008\baltimoreark\2008\08103.U-4763B\CADD\Lighting\U4763_LT_pshES_02H.dgn

TIP NO.	SHEET NO.
U-4763B	ES-16

APPROVED:

DATE:

SEAL

NORTH CAROLINA PROFESSIONAL SEAL 036073 ENGINEER BARRY L. BRANDT

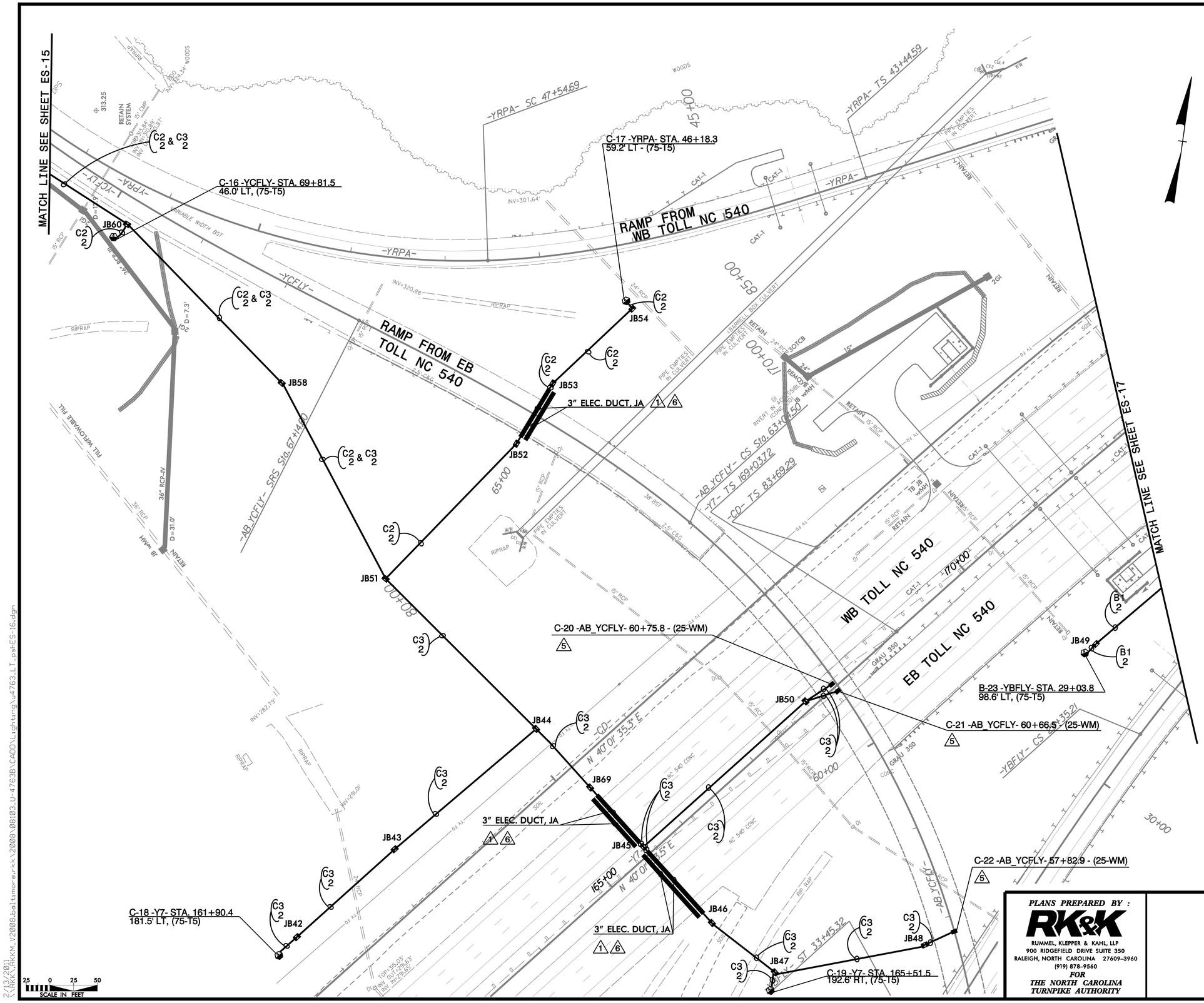

PLANS PREPARED BY :

RK&K

RUMMEL, KLEPPER & KAHL, LLP
900 RIDGEFIELD DRIVE SUITE 350
RALEIGH, NORTH CAROLINA 27609-3960
(919) 878-9560
FOR
THE NORTH CAROLINA TURNPIKE AUTHORITY

TOLL NC 540 AT TOLL NC 147

2/13/2011
\\RKK\RKKM\V2008\baltimoreerkk\2008\08103.U-4763B\CADD\Lighting\u4763_LT_pshES16.dgn

TIP NO.	SHEET NO.
U-4763B	ES-17

APPROVED:

DATE:

SEAL

NORTH CAROLINA PROFESSIONAL SEAL 036073 ENGINEER BARRY L. BRANDT

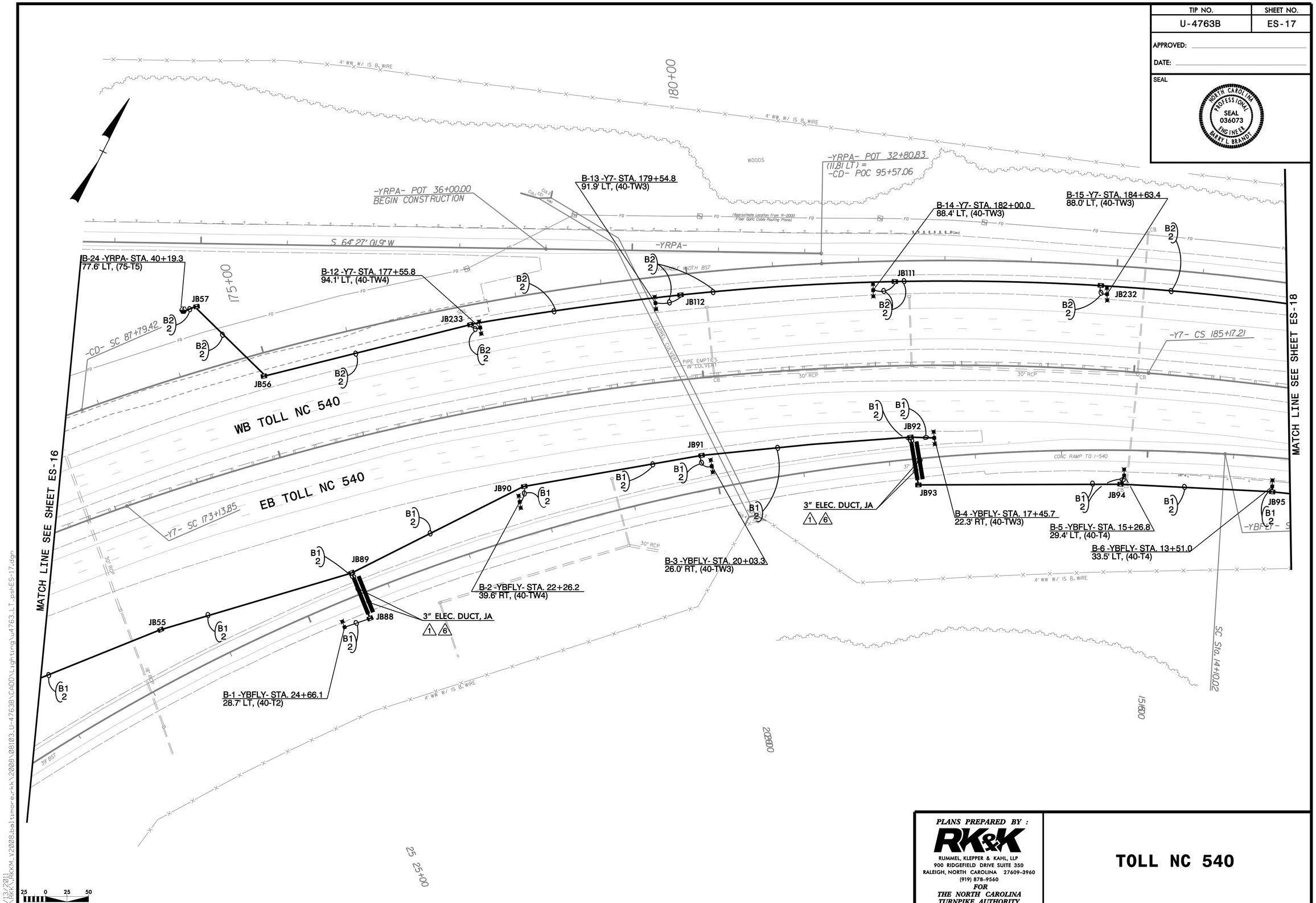

PLANS PREPARED BY :

RK&K

RUMMEL, KLEPPER & KAHL, LLP
900 RIDGEFIELD DRIVE SUITE 350
RALEIGH, NORTH CAROLINA 27609-3960
(919) 878-9560

FOR
THE NORTH CAROLINA
TURNPIKE AUTHORITY

TOLL NC 540

SCALE IN FEET 25 0 25 50

2/13/2011
\\RKK\RKKM\V2008\baltimoreprkk\2008\08103.U-4763B\CADD\Lighting\u4763_LT_pshES-17.dgn

TIP NO.	SHEET NO.
U-4763B	ES-18

APPROVED:

DATE:

SEAL

NORTH CAROLINA PROFESSIONAL SEAL 036073 ENGINEER BARRY L. BRANDT

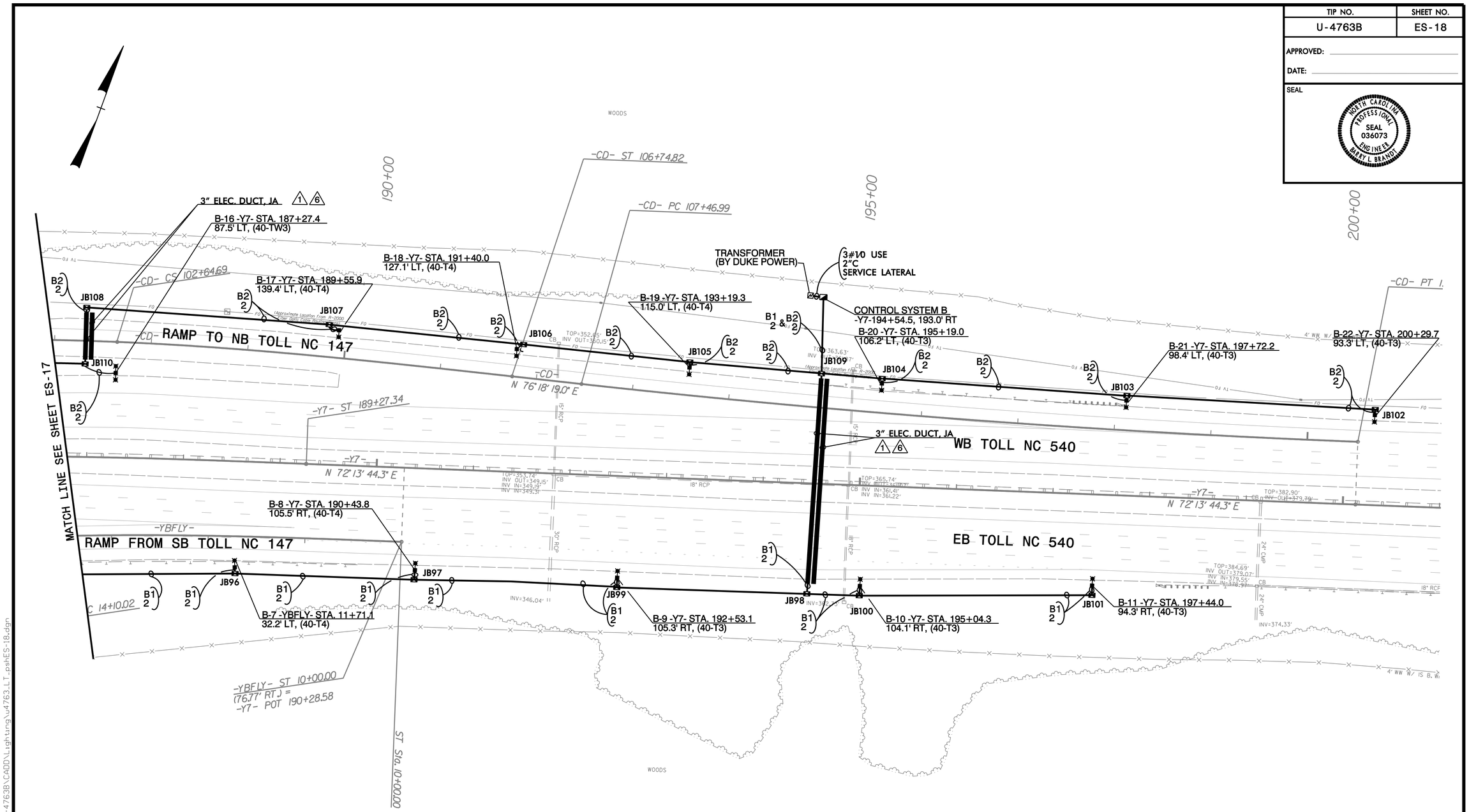

LOAD SCHEDULE
I-540

1Ø, 3W,240/480 VAC CONTROL SYSTEM "B"

CKT	POLE TOP LIGHT 1@400WATT TYPE II	POLE TOP LIGHT 1@400WATT TYPE III	POLE TOP LIGHT 1@400WATT TYPE IV	POLE TOP LIGHT 2@400WATT TYPE III	POLE TOP LIGHT 2@400WATT TYPE IV	HIGHMAST 4@750WATT TYPE V	AMPS @ 480V	KW LOAD	BREAKER SIZE (AMPS)
B1	B–1	B–9, B–10, B–11	B–5, B–6, B–7, B–8	B–3, B–4	B–2	B–23	20.8	10.0 KW	30
B2	–	B–20, B–21, B–22	B–17, B–18, B–19	B–13, B–14, B–15, B–16	B–12	B–24	22.7	10.9 KW	40
SPARE	–	–	–	–	–	–	–	–	20
TOTAL	1	6	7	6	2	2	43.5	20.9	

25 0 25 50
SCALE IN FEET

PLANS PREPARED BY :

RK&K

RUMMEL, KLEPPER & KAHL, LLP
900 RIDGEFIELD DRIVE SUITE 350
RALEIGH, NORTH CAROLINA 27609-3960
(919) 878-9560

FOR
THE NORTH CAROLINA TURNPIKE AUTHORITY

TOLL NC 540 EAST OF TOLL NC 147

2/14/2011
\\RKK\RKKM.V2008.baltimore.rkk\2008\08103.U-4763B\CADD\Lighting\u4763_LT_pshES-18.dgn

Brooks-Berry-Haynie

Western Wake Freeway Submittal Coversheet **Date:** 10/1/2011

PROJECT TITLE:	Western Wake Freeway
PROJECT NUMBER:	R-2635 (A,B,C)
ENGINEER NAME:	The LPA Group
CONTRACTOR NAME:	Raleigh-Durham Roadbuilders
SUBCONTRACTOR NAME:	Brooks-Berry-Haynie & Associates, Inc.
SUPPLIER:	GC Solutions
MANUFACTURER:	Holophane, Union Metal

REVISIONS	
Number	Date

SUBMITTAL NUMBER:	3526-700-003
PRODUCT DESCRIPTION:	Roadway Lighting Equipment
SPEC. REFERENCE:	
APPLICABLE STANDARDS:	NCDOT
IDENTIFY DEVIATIONS:	Foundation Design To Follow

BROOKS-BERRY-HAYNIE & ASSOC., INC.
Electrical Contractors Since 1953
600 Discovery Place
Mableton, GA 30126

X	No Exceptions		Amend & Resubmit
	Make Corrections Noted		Rejected - See Remarks

Date: 10/1/11	By: JMB

Review of Shop Drawings Shall Not Relieve The Vendor of Responsibility for Compliance With The Contract Drawings, Specifications, or Purchase Order.

X	For Approval
	For Review and Comment

BROOKS-BERRY-HAYNIE & ASSOCIATES, INC

SUBMITTAL REGISTER

PROJECT: WESTERN WAKE FREEWAY
SUBMITTAL NUMBER: 3526-003
DATE: 10/1/2011

ITEM NO.	ITEM DESCRIPTION	ITEM MANUFACTURER	CATALOG NUMBER	SPEC. NUMBER	DRAWING NUMBER	APPLICABLE REMARKS	REVIEW CODE
1	HIGH MAST LIGHTING FIXTURE	HOLOPHANE	HMAOC10HP48S9		L-2	FOR USE ON HM4,HM6,HM8,AND HM12	
2	TYPE P4A ROADWAY FIXTURE	HOLOPHANE	G250HP48LFFVG6		L-2		
3	TYPE P2B ROADWAY FIXTURE	HOLOPHANE	G400HP48LNFVG6		L-2		
4	TYPE P3A ROADWAY FIXTURE	HOLOPHANE	G250HP48LWFVG6		L-2		
5	TYPE P3B ROADWAY FIXTURE	HOLOPHANE	G400HP48LWFVG6		L-2		
6	TYPE P4B ROADWAY FIXTURE	HOLOPHANE	G400HP48LFFVG6		L-2		
7	TYPE 2P4B ROADWAY FIXTURE	HOLOPHANE	G400HP48LFFVG6		L-2		
8	TYPE 2P3B ROADWAY FIXTURE	HOLOPHANE	G400HP48LWFVG6		L-2		
9	TYPE 2P2B ROADWAY FIXTURE	HOLOPHANE	G400HP48LNFVG6		L-2		
10	TYPE 2P3AMT ROADWAY FIXTURE	HOLOPHANE	G250HPMTLWFVG6		L-2		
11	TYPE P3BMT ROADWAY FIXTURE	HOLOPHANE	G400HPMTLWFVG6		L-2		
12	TYPE WM70 WALLPACK	HOLOPHANE	W4070HP48UG		L-2		
13	TYPE WM10 WALLPACK	HOLOPHANE	W4100HP48UG		L-2		
14	ROUND TAPERED STEEL POLE COMPUTER ANALYSIS	UNION METAL					
15	ROUND TAPERED STEEL POLE CUT SHEET	UNION METAL					
16	TYPE 05 LOWERING DEVICE FOR HI-MAST	HOLOPHANE	VARIES PER POLE				
17	TYPE 05 PORTABLE DRIVE MOTOR FOR LOWERING DEVICE	HOLOPHANE	LDM-1-1-480NCDOT		L-2		

Type S & J

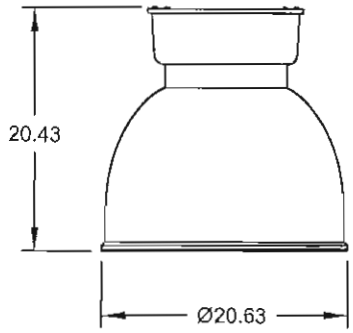

Type R & L

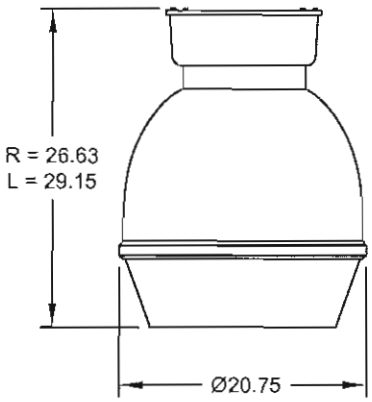

Maximum Weight:
Type S = 76 lb. (34.5 Kg)
Type R = 88 lb. (39.9 Kg)
Type L = 92 lb. (41.7 Kg)
Type J = 79 lb. (35.8 Kg)
Effective Projected Area (EPA):
Type S & J = 1.34 ft.²
Type R = 1.72 ft.²
Type L = 1.78 ft.²

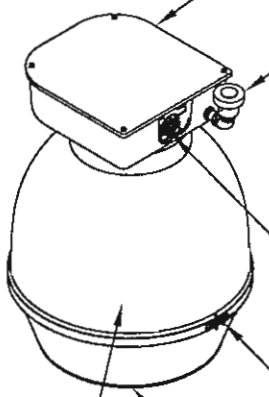

HMAO™ High Mast Advanced Optix

Functional Outdoor

Customer Preferred: (Most Frequently Ordered Catalog Numbers)

HMAO	*400HP*	*48*	*J*	*7*
	C10HP	*MT*	*L*	*9*
			R	
			S	

HMAO	C10HP	48	S	9
Series	Source / Wattage	Voltage	Optic	Beam Angle

Series		Source / Wattage	Voltage		Optic	Beam Angle
High Mast Advanced Optix Series Luminaire	**400HP**[1]	400W HPS	12	120V, C/UL/US	J = Asymmetric Reflector	0 = NCO Optic L
	40RHP[1]	400W HPS Mag Reg	20	208V, UL	L = Asymmetric Refractor	1 = SCO Optic L
	400MP[2*]	400W MH Open Fixture Rated	24	240V, UL	R = Symmetric Refractor	7 = Low; FCO Optic S & J; CO Optic L & R
	Ⓔ **400PP**[2]	400W Pulse MH Open Fixture Rated	27	277V, C/UL/US	S = Symmetric Reflector	9 = High; FCO Optic S; CO Optic L & R
	750HP[1]	750W HPS	34	347V, C/UL		
	C10HP[1 3]	1000W HPS	48	480V, UL		
	CP1HP[1 3]	1000W HPS Compact Lamp	MT	Multivolt (120, 208, 240, 277V, UL)		
	C10MP[2]	1000W MH Open Fixture Rated	MA	Multivolt, Wired to 120V, UL		
			MB	Multivolt, Wired to 208V, UL		
			MC	Multivolt, Wired to 240V, UL		
			MD	Multivolt, Wired to 277V, UL		
			08	208V, Isolated Secondary, C/UL		
			40	240V, Isolated Secondary, C/UL		

Cutoff Classification: FCO = Full Cutoff; CO = Cutoff; SCO = Semi-Cutoff; NCO = Non Cutoff

[1] Mogul Base, Open Fixtura Rated Lamps Only
[2] Protected Sockets, Open Fixture Rated Lamps Only
[3] 105° C Supply Wire Required for All 1000W HPS
** Not Available for Shipment in US After 12/31/08 Due to EISA 2007 Legislation*

LAMP

Options and Accessories

OPTIONS

R Twistlock Photocontrol Receptacle. Not Available with Voltage Code MT.
PS Protective Starter for 400HP, 40RHP, C10HP and CP1HP units only. Not Available with 08 or 40 Voltage Codes.
FD1 Single Fusible Disconnect (12, 24, 27, MA, MC, MD & 34) Not Available for 750HP34.
FD2 Double Fusible Disconnect (08 & 24) Not Available for 750HP34.

ACCESSORIES

Lamp
F1 Single Fusing, Field Installed (12, 24, 27, MA, MC, MD & 34)
F2 Double Fusing, Field Installed (08, 24, MB, MC & 48)
SD-395-90 90° Shield
SD-395-120 120° Shield
SD-395-180 180° Shield
PS-100 Replacement Protected Starter for 400HP and 40RHP
PS-1000 Replacement Protected Starter for 1000 HPS

ORDERING INFORMATION:

HOLOPHANE® LEADER IN LIGHTING SOLUTIONS
An AcuityBrandsCompany

© 2009 Acuity Brands Lighting, Inc., All Rights Reserved

THIS DRAWING, WHEN APPROVED, SHALL BECOME THE COMPLETE SPECIFICATION FOR THE MATERIAL TO BE FURNISHED BY HOLOPHANE ON THE ORDER NOTED ABOVE. A UNIT OF SIMILAR DESIGN MAY BE SUPPLIED, BUT ONLY AFTER APPROVAL BY THE CUSTOMER IN WRITING. ON POLE MOUNTED AN ANCHOR BOLT TEMPLATE PRINT WILL BE SUPPLIED WITH EACH ANCHOR BOLT ORDER TO MATCH THE POLE PROVIDED. THIS PRINT IS THE PROPERTY OF HOLOPHANE AND IS LOANED SUBJECT TO RETURN UPON DEMAND AND UPON EXPRESS CONDITION THAT IT WILL NOT BE USED DIRECTLY OR INDIRECTLY IN ANY WAY DETRIMENTAL TO OUR INTERESTS, AND ONLY IN CONNECTION WITH MATERIAL FURNISHED BY HOLOPHANE.

ORDER #:	
TYPE:	HMAO
DRAWN:	LJS
DATE:	5/20/09
DWG #:	

Specifications

GENERAL DESCRIPTION
The luminaire shall be Holophane catalog number _____. Its effective projected area (EPA) shall not exceed _____ square feet. Fixture shall be UL listed for wet locations, 40°C ambient temperatures and be CUL Certified.

HOUSING
Shall be die cast aluminum, including a seven stage pre-treatment and finished with 2 to 4 mil of polyester powder paint. The bracket arm clamp shall attach to a 51mm (2") nominal schedule 40 pipe and allow for ±3° adjustment for leveling the luminaire. A stainless steel lamp clamp lined with woven glass cloth shall be attached to the reflector housing assembly for standard 1000 watt HID lamps. The fixture shall pass a vibration fatigue test per ANSI standards for Roadway Lighting Equipment - Luminaire Vibration.

BALLAST
Shall be copper wound with power factor 90%. It shall have a published ballast factor of 1 to ensure full output of the lamp. All ballast components shall be completely removable as a unitized quick disconnect assembly for maintenance. A terminal block shall be provided to simplify wiring and provide positive electrical connections. A protected starter, if specified, shall sense an inoperative or missing HPS lamp and automatically shut down to prevent runaway operation, shortened life and damage to secondary ballast windings.

OPTICAL ASSEMBLY
The optical assembly shall consist of highly specular enhanced aluminum hermetically sealed between a spun aluminum cover and an open ventilated borosilicate glass piece and/or prismatic refractor or an internal reflector system. The exposed smooth glass inner surface shall be continuously cleaned by the chimney effect of flow through air and subject to no permanent deterioration. The lamp shall be operated in the vertical position for maximum life and lumen maintenance. There shall be no glass bottom enclosure to scatter light above the horizon, to collect dirt or to reduce luminaire efficiency.

PHOTOMETRIC PERFORMANCE
The luminaire can provide up to Full Cutoff, Cutoff, Semi-Cutoff and Non Cutoff distributions. Luminaire dirt depreciation shall be less than 5% (LDD 0.95).

ELECTRICAL CHARACTERISTICS
For complete electrical data, see tables of electrical characteristics in Holophane Ballast Handbook, publication HL-301.

HMAO™
High Mast Advanced Optix

Functional
Outdoor

HOLOPHANE®
LEADER IN LIGHTING SOLUTIONS
An AcuityBrandsCompany

© 2009 Acuity Brands Lighting, Inc., All Rights Reserved

THIS DRAWING, WHEN APPROVED, SHALL BECOME THE COMPLETE SPECIFICATION FOR THE MATERIAL TO BE FURNISHED BY HOLOPHANE ON THE ORDER NOTED ABOVE. A UNIT OF SIMILAR DESIGN MAY BE SUPPLIED, BUT ONLY AFTER APPROVAL BY THE CUSTOMER IN WRITING. ON POLE ORDERS AN ANCHOR BOLT TEMPLATE PRINT WILL BE SUPPLIED WITH EACH ANCHOR BOLT ORDER TO MATCH THE POLE PROVIDED. THIS PRINT IS THE PROPERTY OF HOLOPHANE AND IS LOANED SUBJECT TO RETURN UPON DEMAND AND UPON EXPRESS CONDITION THAT IT WILL NOT BE USED DIRECTLY OR INDIRECTLY IN ANY WAY DETRIMENTAL TO OUR INTERESTS, AND ONLY IN CONNECTION WITH MATERIAL FURNISHED BY HOLOPHANE.

ORDER #:	
TYPE:	HMAO
DRAWN:	LJS
DATE:	5/20/09
DWG #:	

UL/CUL LISTED
MAX AMBIENT: 40°C
MAX WEIGHT: 50lbs (23kg)
EPA: 2.05 sq. ft.

MONGOOSE®

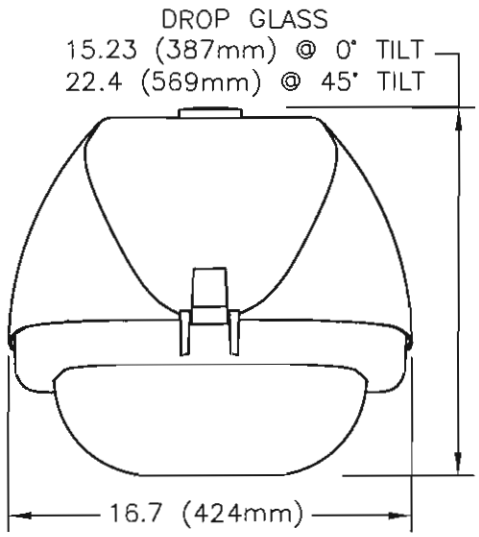

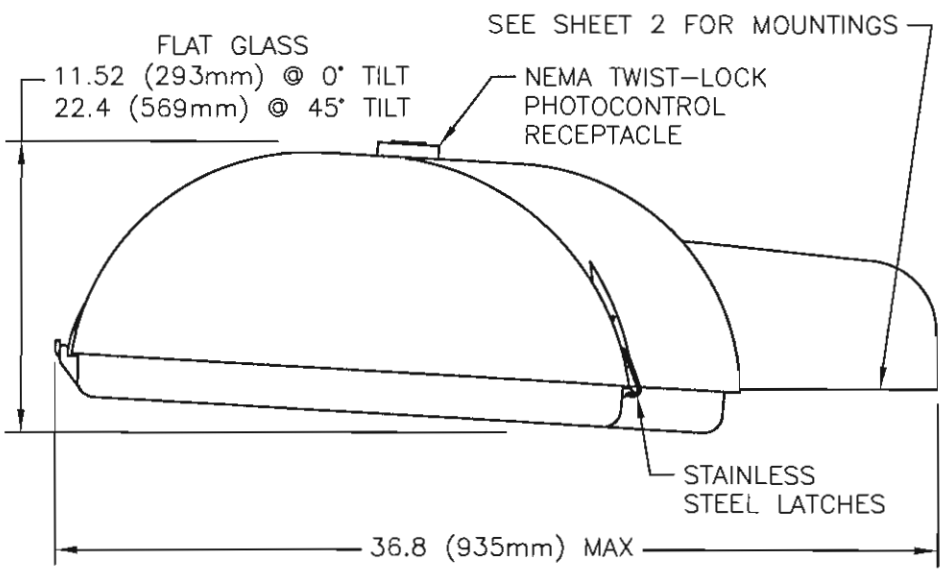

G250HP48LFFVG6 W/LAMP

CATALOG NUMBER

SOURCE AND WATTAGE

- **100HP** 100W HPS
- **15AHP** 150W HPS
- **200HP** 200W HPS
- **250HP** 250W HPS
- **25LHP** 250W HPS
- **400HP** 400W HPS
- **40LHP** 400W HPS
- **175MH** 175W MH *
- **175PM** 175W PM
- **250MH** 250W MH *
- **400MH** 400W MH *
- **40LMH** 400W MH *
- **250PM** 250W PM
- **400PM** 400W PM
- **40LPM** 400W LPM

VOLTAGE

- **12** 120V
- **20** 208V
- **24** 240V
- **27** 277V
- **48** 480V
- **34** 347V
- **MT** MULTIVOLT 120,208,240,277V
- **MA** MULTIVOLT PRE-WIRED (120V)
- **MB** MULTIVOLT PRE-WIRED (208V)
- **MC** MULTIVOLT PRE-WIRED (240V)
- **MD** MULTIVOLT PRE-WIRED (277V)
- **VT** MULTIVOLT 120, 277, 347V (NOT AVAIABLE IN 200W HPS OR 175W PM)

* NOT AVAILAIBLE FOR SHIPMENT IN THE US AFTER 12-31-08 DUE TO EISA 2007 LEGISLATION

TILT RANGE

- **L** LOW TILT, 0°-18°
- **H** HIGH TILT, 27°-45°

OPTICS

- **DC** MEDIUM ROADWAY, CLEAR DROP GLASS
- **DR** MEDIUM ROADWAY, GLASS REFRACTOR
- **FC** FORWARD THROW, CLEAR DROP GLASS
- **FF** FORWARD THROW, FLAT GLASS
- **NC** NARROW ROADWAY, CLEAR DROP GLASS
- **ND** NARROW FLOOD
- **NF** NARROW ROADWAY, FLAT GLASS
- **NR** NARROW ROADWAY, GLASS REFRACTOR
- **SC** SQUARE, CLEAR DROP GLASS
- **SF** SQUARE, FLAT GLASS
- **WC** WIDE ROADWAY, CLEAR DROP GLASS
- **WD** WIDE FLOOD
- **WF** WIDE ROADWAY, FLAT GLASS
- **WR** WIDE ROADWAY, GLASS REFRACTOR

MOUNTING

- **A** ARCHITECTURAL
- **H** HORIZONTAL
- **V** VERTICAL

FINISH

- **G** GRAY
- **K** BLACK
- **N** GREEN
- **W** WHITE
- **Z** BRONZE

OPTIONS

- **B** TERMINAL BLOCK & NEMA DECAL
- **C** NEMA DECAL
- **P** PROTECTED STARTER
- **R** NEMA TWIST-LOCK PHOTOCONTROL RECEPTACLE
- **T** SPADE TERMINATION FOR BALLAST LEADS
- **3** 3" TO 2" TENON ADAPTER
- **6** 6' PIGTAIL

ACCESSORIES

- **F1** SINGLE FUSING (120, 240, 277 & 347V)
- **F2** DOUBLE FUSING (208, 240 & 480V)
- **LAMP**
- **BKT-5-G** GALVANIZED WOOD POLE BRACKET
- **BR-1091-XX** 3" TO 2" TENON ADAPTER

HOLOPHANE®
LEADER IN LIGHTING SOLUTIONS
An AcuityBrands Company

ORDER NO: _____

TYPE: P4A

DRAWING NO. _____
CAD MODEL: MONGOOSE.DWG
DATE: 1-5-09

©2002 ACUITY LIGHTING GROUP, INC. 214 OAKWOOD AVE., NEWARK, OH 43055

MONGOOSE®

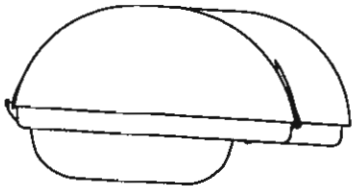

OPTIC TILT RANGE

DC	HIGH
DR	HIGH
FC	LOW
NC	HIGH
NR	ALL
SC	LOW
WC	HIGH
WR	ALL

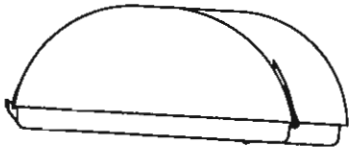

OPTIC TILT RANGE

FF	LOW
ND	HIGH
NF	LOW
SF	LOW
WD	HIGH
WF	LOW

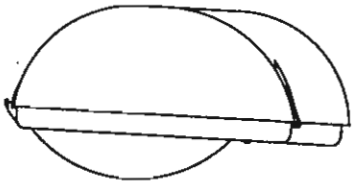

OPTIC TILT RANGE

NC	LOW
WC	LOW

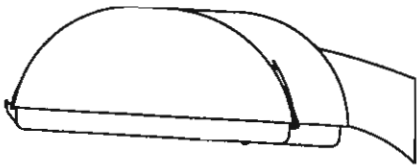

"A" MOUNTING
ATTACHES TO A SQUARE
POLE OR TENON ADAPTOR
USING PATTERN BELOW

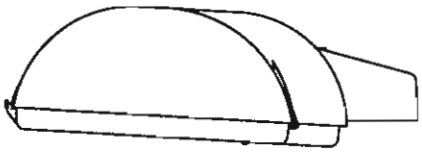

"H" MOUNTING
ATTACHES TO A
2" HORIZONTAL TENON

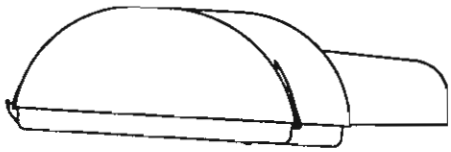

"V" MOUNTING
ATTACHES TO A
2" VERTICAL TENON

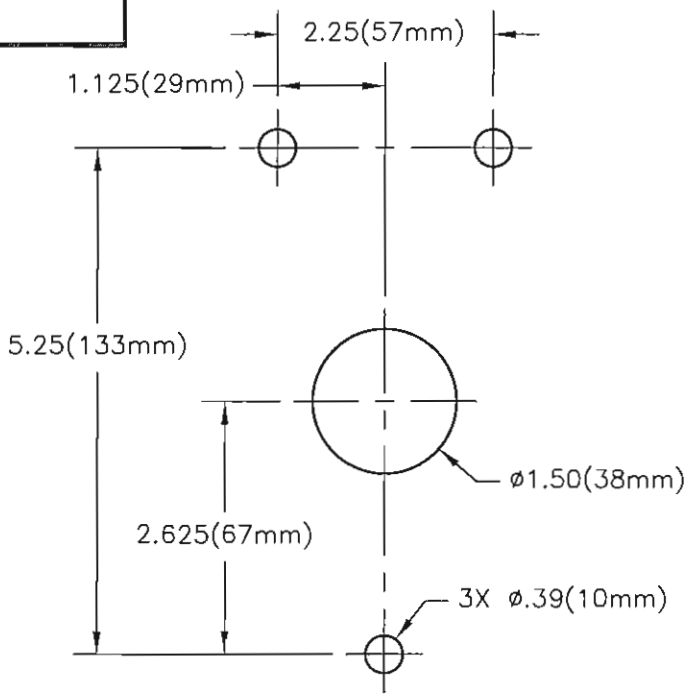

"A" MOUNTING PATTERN

HOLOPHANE®
LEADER IN LIGHTING SOLUTIONS
An AcuityBrands Company

ORDER NO: _____

TYPE: P4A

DRAWING NO. _____
CAD MODEL: MONGOOSE.DWG
DATE: 1-5-09
Sheet 2

©2002 ACUITY LIGHTING GROUP INC. 214 OAKWOOD AVE. NEWARK, OH 43055

UL/CUL LISTED
MAX AMBIENT: 40°C
MAX WEIGHT: 50lbs (23kg)
EPA: 2.05 sq. ft.

MONGOOSE®

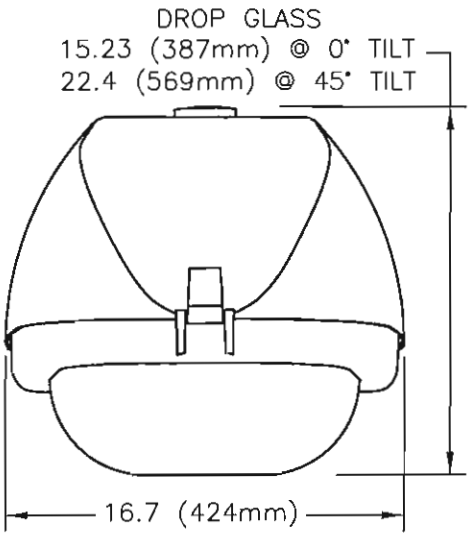

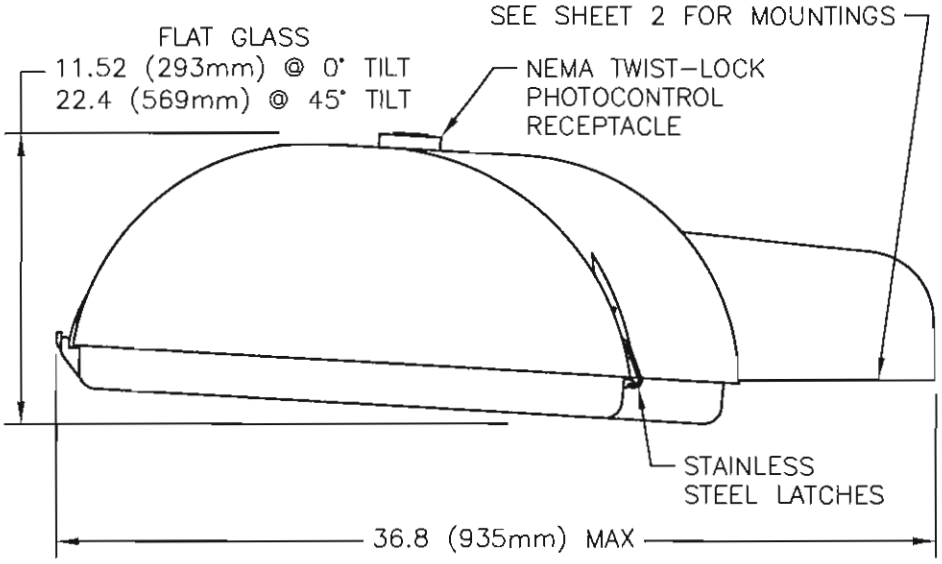

G400HP48LNFVG6 W/LAMP

CATALOG NUMBER

SOURCE AND WATTAGE

- **100HP** 100W HPS
- **15AHP** 150W HPS
- **200HP** 200W HPS
- **250HP** 250W HPS
- **25LHP** 250W HPS
- **400HP** 400W HPS
- **40LHP** 400W HPS
- **175MH** 175W MH *
- **175PM** 175W PM
- **250MH** 250W MH *
- **400MH** 400W MH *
- **40LMH** 400W MH *
- **250PM** 250W PM
- **400PM** 400W PM
- **40LPM** 400W LPM

VOLTAGE

- **12** 120V
- **20** 208V
- **24** 240V
- **27** 277V
- **48** 480V
- **34** 347V
- **MT** MULTIVOLT 120,208,240,277V
- **MA** MULTIVOLT PRE-WIRED (120V)
- **MB** MULTIVOLT PRE-WIRED (208V)
- **MC** MULTIVOLT PRE-WIRED (240V)
- **MD** MULTIVOLT PRE-WIRED (277V)
- **VT** MULTIVOLT 120, 277, 347V (NOT AVAIABLE IN 200W HPS OR 175W PM)

* NOT AVAILAIBLE FOR SHIPMENT IN THE US AFTER 12-31-08 DUE TO EISA 2007 LEGISLATION

TILT RANGE

- **L** LOW TILT, 0°-18°
- **H** HIGH TILT, 27°-45°

OPTICS

- **DC** MEDIUM ROADWAY, CLEAR DROP GLASS
- **DR** MEDIUM ROADWAY, GLASS REFRACTOR
- **FC** FORWARD THROW, CLEAR DROP GLASS
- **FF** FORWARD THROW, FLAT GLASS
- **NC** NARROW ROADWAY, CLEAR DROP GLASS
- **ND** NARROW FLOOD
- **NF** NARROW ROADWAY, FLAT GLASS
- **NR** NARROW ROADWAY, GLASS REFRACTOR
- **SC** SQUARE, CLEAR DROP GLASS
- **SF** SQUARE, FLAT GLASS
- **WC** WIDE ROADWAY, CLEAR DROP GLASS
- **WD** WIDE FLOOD
- **WF** WIDE ROADWAY, FLAT GLASS
- **WR** WIDE ROADWAY, GLASS REFRACTOR

MOUNTING

- **A** ARCHITECTURAL
- **H** HORIZONTAL
- **V** VERTICAL

FINISH

- **G** GRAY
- **K** BLACK
- **N** GREEN
- **W** WHITE
- **Z** BRONZE

OPTIONS

- **B** TERMINAL BLOCK & NEMA DECAL
- **C** NEMA DECAL
- **P** PROTECTED STARTER
- **R** NEMA TWIST-LOCK PHOTOCONTROL RECEPTACLE
- **T** SPADE TERMINATION FOR BALLAST LEADS
- **3** 3" TO 2" TENON ADAPTER
- **6** 6' PIGTAIL

ACCESSORIES

- **F1** SINGLE FUSING (120, 240, 277 & 347V)
- **F2** DOUBLE FUSING (208, 240 & 480V)
- **LAMP**
- **BKT-5-G** GALVANIZED WOOD POLE BRACKET
- **BR-1091-XX** 3" TO 2" TENON ADAPTER

HOLOPHANE®
LEADER IN LIGHTING SOLUTIONS
An AcuityBrands Company

ORDER NO: _____

TYPE: P2B

DRAWING NO. _____
CAD MODEL: MONGOOSE.DWG
DATE: 1-5-09

©2002 ACUITY LIGHTING GROUP, INC. 214 OAKWOOD AVE. NEWARK, OH 43055

MONGOOSE®

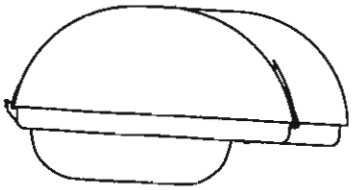

OPTIC TILT RANGE

DC	HIGH
DR	HIGH
FC	LOW
NC	HIGH
NR	ALL
SC	LOW
WC	HIGH
WR	ALL

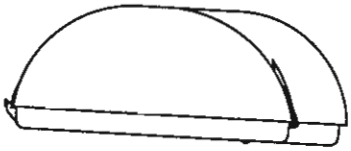

OPTIC TILT RANGE

FF	LOW
ND	HIGH
NF	LOW
SF	LOW
WD	HIGH
WF	LOW

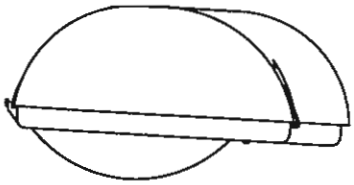

OPTIC TILT RANGE

NC	LOW
WC	LOW

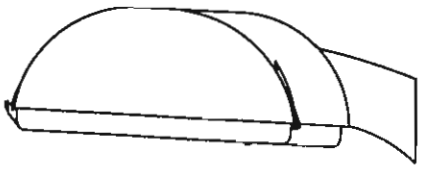

"A" MOUNTING
ATTACHES TO A SQUARE
POLE OR TENON ADAPTOR
USING PATTERN BELOW

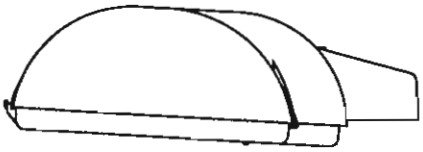

"H" MOUNTING
ATTACHES TO A
2" HORIZONTAL TENON

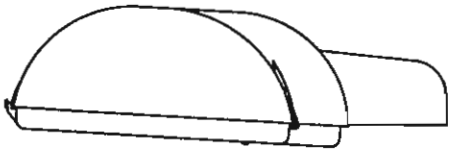

"V" MOUNTING
ATTACHES TO A
2" VERTICAL TENON

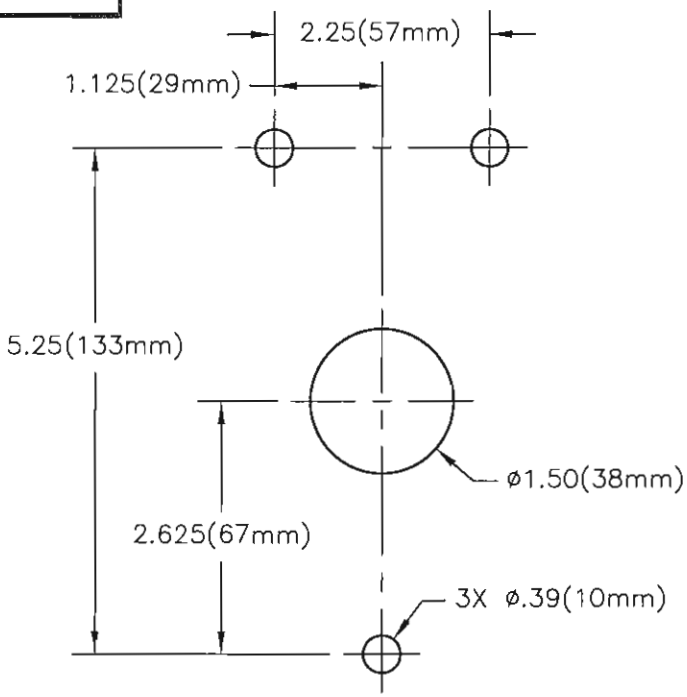

"A" MOUNTING PATTERN

HOLOPHANE®
LEADER IN LIGHTING SOLUTIONS
An AcuityBrands Company

ORDER NO: _____

TYPE: P2B

DRAWING NO. _____
CAD MODEL: MONGOOSE.DWG
DATE: 1-5-09
Sheet 2

©2002 ACUITY LIGHTING GROUP, INC. 214 OAKWOOD AVE., NEWARK, OH 43055

UL/CUL LISTED
MAX AMBIENT: 40°C
MAX WEIGHT: 50lbs (23kg)
EPA: 2.05 sq. ft.

MONGOOSE®

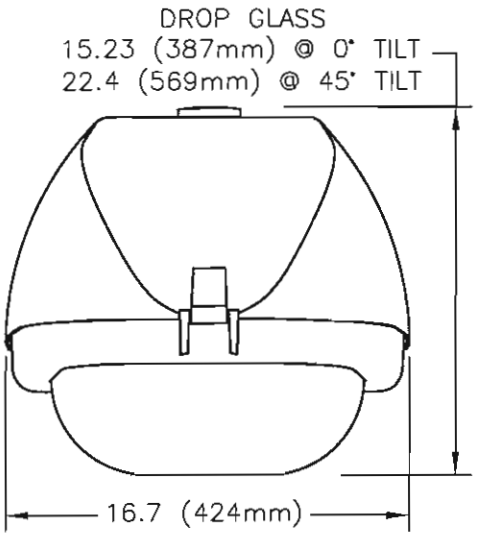

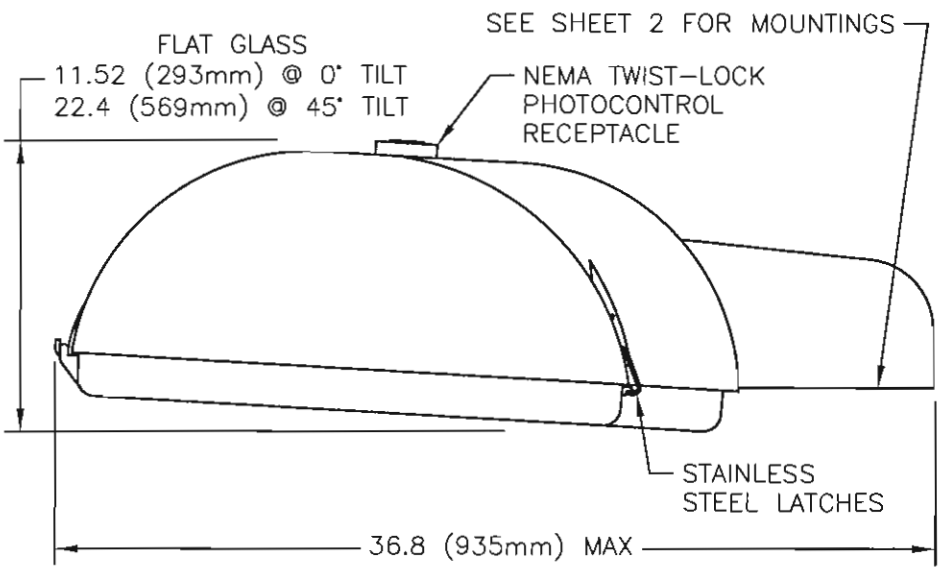

G250HP48LWFVG6 W/LAMP

CATALOG NUMBER

SOURCE AND WATTAGE

- **100HP** 100W HPS
- **15AHP** 150W HPS
- **200HP** 200W HPS
- **250HP** 250W HPS
- **25LHP** 250W HPS
- **400HP** 400W HPS
- **40LHP** 400W HPS
- **175MH** 175W MH *
- **175PM** 175W PM
- **250MH** 250W MH *
- **400MH** 400W MH *
- **40LMH** 400W MH *
- **250PM** 250W PM
- **400PM** 400W PM
- **40LPM** 400W LPM

VOLTAGE

- **12** 120V
- **20** 208V
- **24** 240V
- **27** 277V
- **48** 480V
- **34** 347V
- **MT** MULTIVOLT 120,208,240,277V
- **MA** MULTIVOLT PRE-WIRED (120V)
- **MB** MULTIVOLT PRE-WIRED (208V)
- **MC** MULTIVOLT PRE-WIRED (240V)
- **MD** MULTIVOLT PRE-WIRED (277V)
- **VT** MULTIVOLT 120, 277, 347V (NOT AVAIABLE IN 200W HPS OR 175W PM)

* NOT AVAILAIBLE FOR SHIPMENT IN THE US AFTER 12-31-08 DUE TO EISA 2007 LEGISLATION

TILT RANGE

- **L** LOW TILT, 0°-18°
- **H** HIGH TILT, 27°-45°

OPTICS

- **DC** MEDIUM ROADWAY, CLEAR DROP GLASS
- **DR** MEDIUM ROADWAY, GLASS REFRACTOR
- **FC** FORWARD THROW, CLEAR DROP GLASS
- **FF** FORWARD THROW, FLAT GLASS
- **NC** NARROW ROADWAY, CLEAR DROP GLASS
- **ND** NARROW FLOOD
- **NF** NARROW ROADWAY, FLAT GLASS
- **NR** NARROW ROADWAY, GLASS REFRACTOR
- **SC** SQUARE, CLEAR DROP GLASS
- **SF** SQUARE, FLAT GLASS
- **WC** WIDE ROADWAY, CLEAR DROP GLASS
- **WD** WIDE FLOOD
- **WF** WIDE ROADWAY, FLAT GLASS
- **WR** WIDE ROADWAY, GLASS REFRACTOR

MOUNTING

- **A** ARCHITECTURAL
- **H** HORIZONTAL
- **V** VERTICAL

FINISH

- **G** GRAY
- **K** BLACK
- **N** GREEN
- **W** WHITE
- **Z** BRONZE

OPTIONS

- **B** TERMINAL BLOCK & NEMA DECAL
- **C** NEMA DECAL
- **P** PROTECTED STARTER
- **R** NEMA TWIST-LOCK PHOTOCONTROL RECEPTACLE
- **T** SPADE TERMINATION FOR BALLAST LEADS
- **3** 3" TO 2" TENON ADAPTER
- **6** 6' PIGTAIL

ACCESSORIES

- **F1** SINGLE FUSING (120, 240, 277 & 347V)
- **F2** DOUBLE FUSING (208, 240 & 480V)
- **LAMP**
- **BKT-5-G** GALVANIZED WOOD POLE BRACKET
- **BR-1091-XX** 3" TO 2" TENON ADAPTER

HOLOPHANE®
LEADER IN LIGHTING SOLUTIONS
An AcuityBrands Company

ORDER NO: _____

TYPE: P3A

DRAWING NO.
CAD MODEL: MONGOOSE.DWG
DATE: 1-5-09

©2002 ACUITY LIGHTING GROUP, INC. 214 OAKWOOD AVE., NEWARK, OH 43055

MONGOOSE®

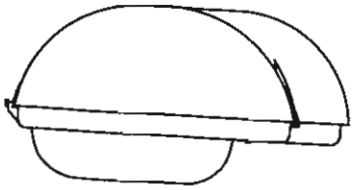

OPTIC TILT RANGE

DC	HIGH
DR	HIGH
FC	LOW
NC	HIGH
NR	ALL
SC	LOW
WC	HIGH
WR	ALL

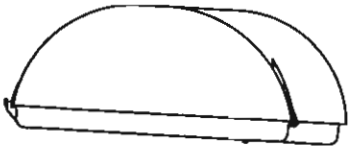

OPTIC TILT RANGE

FF	LOW
ND	HIGH
NF	LOW
SF	LOW
WD	HIGH
WF	LOW

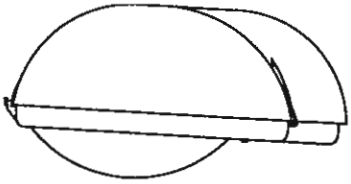

OPTIC TILT RANGE

NC	LOW
WC	LOW

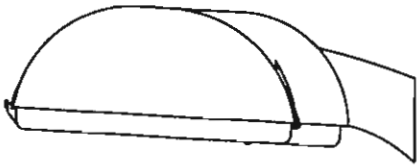

"A" MOUNTING
ATTACHES TO A SQUARE
POLE OR TENON ADAPTOR
USING PATTERN BELOW

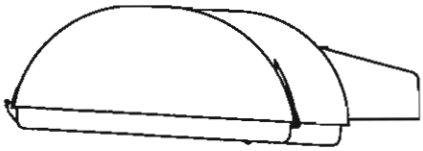

"H" MOUNTING
ATTACHES TO A
2" HORIZONTAL TENON

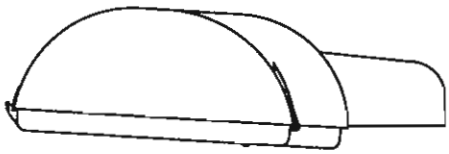

"V" MOUNTING
ATTACHES TO A
2" VERTICAL TENON

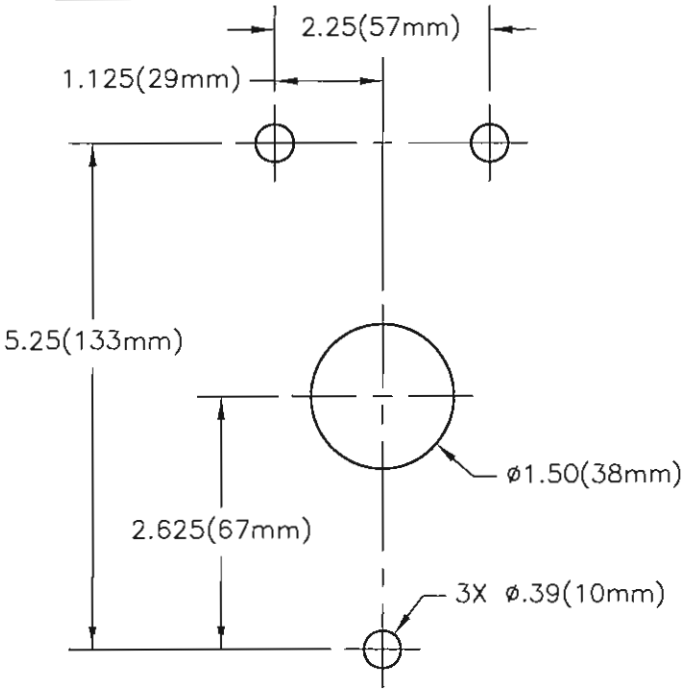

"A" MOUNTING PATTERN

HOLOPHANE®
LEADER IN LIGHTING SOLUTIONS
An AcuityBrands Company

ORDER NO: _____

TYPE: P3A

DRAWING NO. _____
CAD MODEL: MONGOOSE.DWG
DATE: 1-5-09
Sheet 2

©2002 ACUITY LIGHTING GROUP INC. 214 OAKWOOD AVE. NEWARK, OH 43055

UL/CUL LISTED
MAX AMBIENT: 40°C
MAX WEIGHT: 50lbs (23kg)
EPA: 2.05 sq. ft.

MONGOOSE®

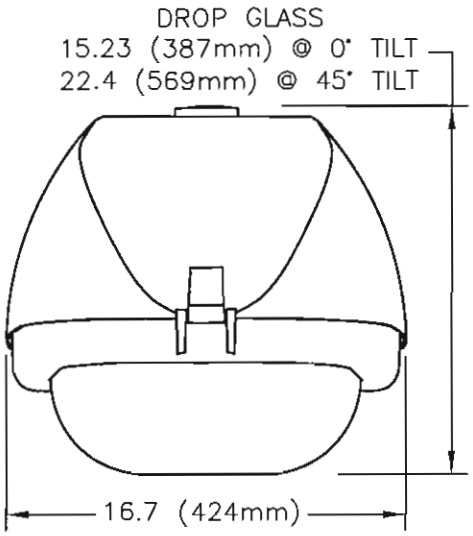

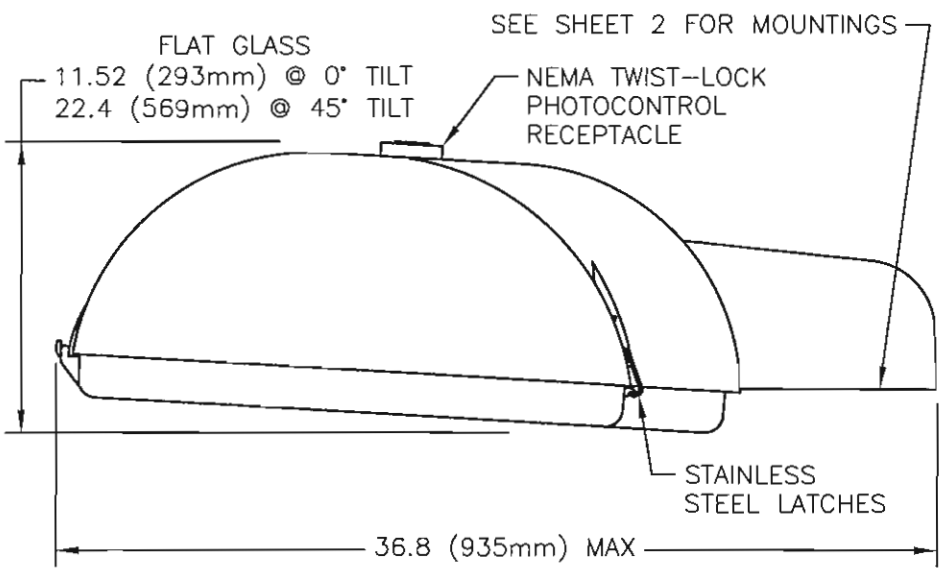

G400HP48LWFVG6 W/LAMP

CATALOG NUMBER

SOURCE AND WATTAGE

- **100HP** 100W HPS
- **15AHP** 150W HPS
- **200HP** 200W HPS
- **250HP** 250W HPS
- **25LHP** 250W HPS
- **400HP** 400W HPS
- **40LHP** 400W HPS
- **175MH** 175W MH *
- **175PM** 175W PM
- **250MH** 250W MH *
- **400MH** 400W MH *
- **40LMH** 400W MH *
- **250PM** 250W PM
- **400PM** 400W PM
- **40LPM** 400W LPM

VOLTAGE

- **12** 120V
- **20** 208V
- **24** 240V
- **27** 277V
- **48** 480V
- **34** 347V
- **MT** MULTIVOLT 120,208,240,277V
- **MA** MULTIVOLT PRE-WIRED (120V)
- **MB** MULTIVOLT PRE-WIRED (208V)
- **MC** MULTIVOLT PRE-WIRED (240V)
- **MD** MULTIVOLT PRE-WIRED (277V)
- **VT** MULTIVOLT 120, 277, 347V (NOT AVAIABLE IN 200W HPS OR 175W PM)

* NOT AVAILAIBLE FOR SHIPMENT IN THE US AFTER 12-31-08 DUE TO EISA 2007 LEGISLATION

TILT RANGE

- **L** LOW TILT, 0°-18°
- **H** HIGH TILT, 27°-45°

OPTICS

- **DC** MEDIUM ROADWAY, CLEAR DROP GLASS
- **DR** MEDIUM ROADWAY, GLASS REFRACTOR
- **FC** FORWARD THROW, CLEAR DROP GLASS
- **FF** FORWARD THROW, FLAT GLASS
- **NC** NARROW ROADWAY, CLEAR DROP GLASS
- **ND** NARROW FLOOD
- **NF** NARROW ROADWAY, FLAT GLASS
- **NR** NARROW ROADWAY, GLASS REFRACTOR
- **SC** SQUARE, CLEAR DROP GLASS
- **SF** SQUARE, FLAT GLASS
- **WC** WIDE ROADWAY, CLEAR DROP GLASS
- **WD** WIDE FLOOD
- **WF** WIDE ROADWAY, FLAT GLASS
- **WR** WIDE ROADWAY, GLASS REFRACTOR

MOUNTING

- **A** ARCHITECTURAL
- **H** HORIZONTAL
- **V** VERTICAL

FINISH

- **G** GRAY
- **K** BLACK
- **N** GREEN
- **W** WHITE
- **Z** BRONZE

OPTIONS

- **B** TERMINAL BLOCK & NEMA DECAL
- **C** NEMA DECAL
- **P** PROTECTED STARTER
- **R** NEMA TWIST-LOCK PHOTOCONTROL RECEPTACLE
- **T** SPADE TERMINATION FOR BALLAST LEADS
- **3** 3" TO 2" TENON ADAPTER
- **6** 6' PIGTAIL

ACCESSORIES

- **F1** SINGLE FUSING (120, 240, 277 & 347V)
- **F2** DOUBLE FUSING (208, 240 & 480V)
- **LAMP**
- **BKT-5-G** GALVANIZED WOOD POLE BRACKET
- **BR-1091-XX** 3" TO 2" TENON ADAPTER

HOLOPHANE®
LEADER IN LIGHTING SOLUTIONS
An AcuityBrands Company

ORDER NO: _____

TYPE: P3B

DRAWING NO.
CAD MODEL: MONGOOSE.DWG
DATE: 1-5-09

©2002 ACUITY LIGHTING GROUP, INC. 214 OAKWOOD AVE. NEWARK, OH 43055

MONGOOSE®

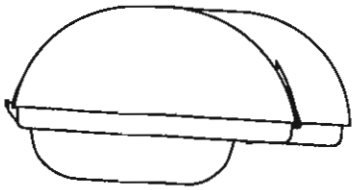

OPTIC TILT RANGE

DC	HIGH
DR	HIGH
FC	LOW
NC	HIGH
NR	ALL
SC	LOW
WC	HIGH
WR	ALL

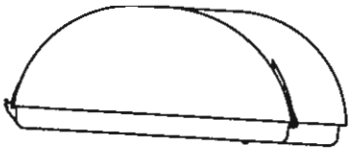

OPTIC TILT RANGE

FF	LOW
ND	HIGH
NF	LOW
SF	LOW
WD	HIGH
WF	LOW

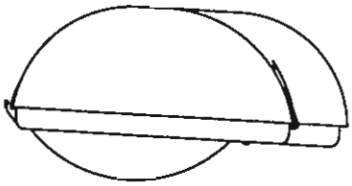

OPTIC TILT RANGE

NC	LOW
WC	LOW

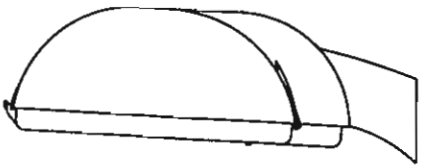

"A" MOUNTING
ATTACHES TO A SQUARE
POLE OR TENON ADAPTOR
USING PATTERN BELOW

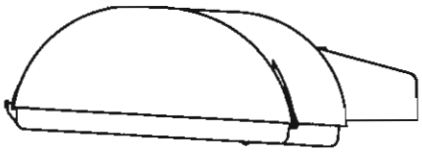

"H" MOUNTING
ATTACHES TO A
2" HORIZONTAL TENON

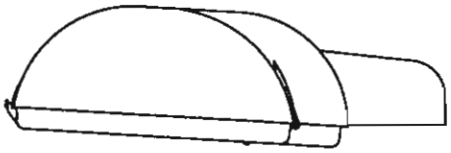

"V" MOUNTING
ATTACHES TO A
2" VERTICAL TENON

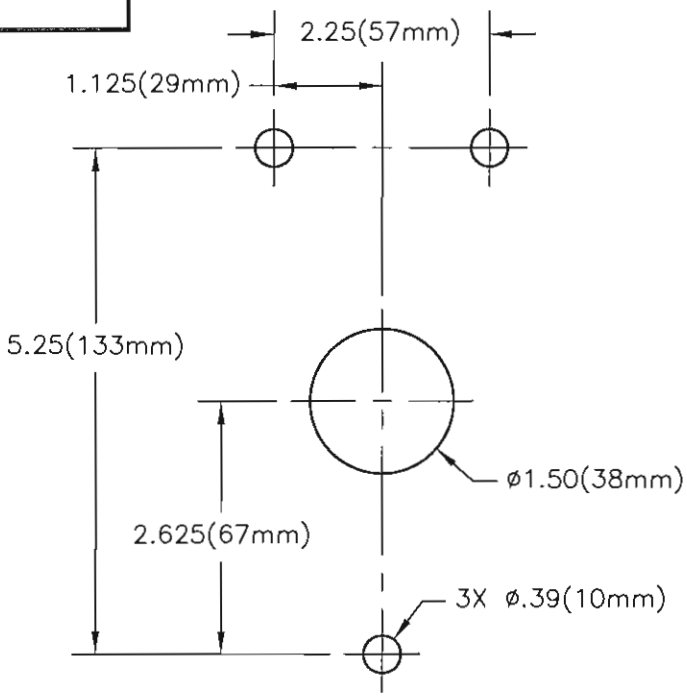

"A" MOUNTING PATTERN

HOLOPHANE®
LEADER IN LIGHTING SOLUTIONS
An AcuityBrands Company

ORDER NO: _____

TYPE: P3B

DRAWING NO. _____
CAD MODEL: MONGOOSE.DWG
DATE: 1-5-09
Sheet 2

©2002 ACUITY LIGHTING GROUP INC. 214 OAKWOOD AVE. NEWARK, OH 43055

UL/CUL LISTED
MAX AMBIENT: 40°C
MAX WEIGHT: 50lbs (23kg)
EPA: 2.05 sq. ft.

MONGOOSE®

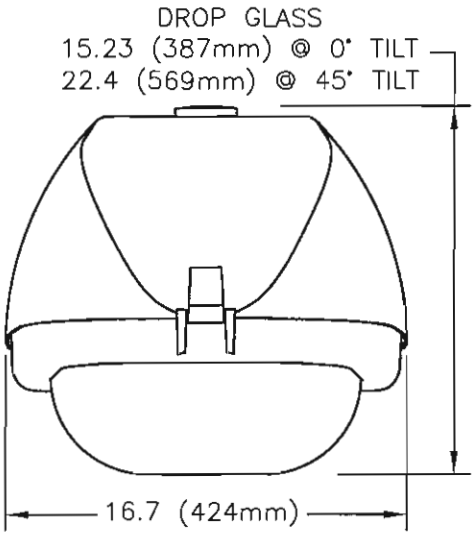

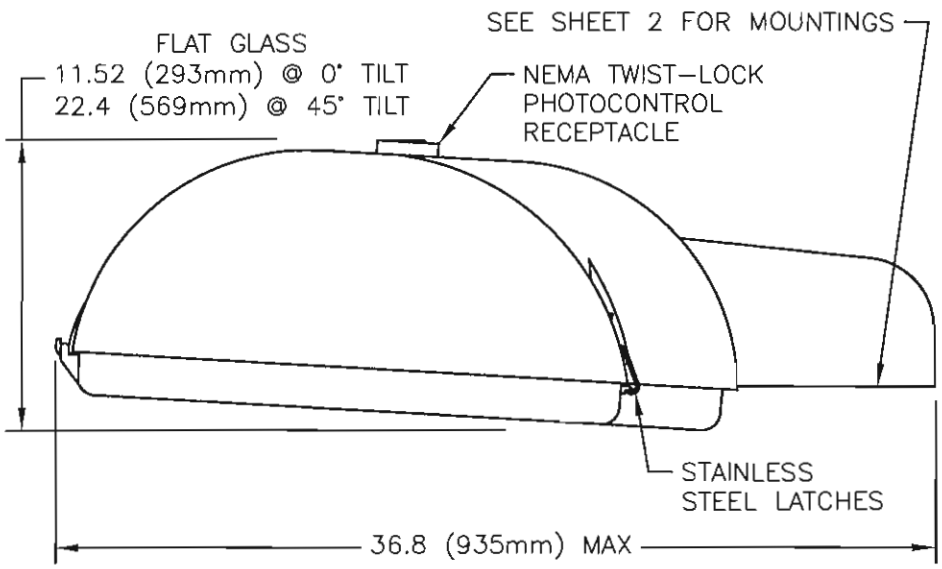

G400HP48LFFVG6 W/LAMP

CATALOG NUMBER

SOURCE AND WATTAGE

- **100HP** 100W HPS
- **15AHP** 150W HPS
- **200HP** 200W HPS
- **250HP** 250W HPS
- **25LHP** 250W HPS
- **400HP** 400W HPS
- **40LHP** 400W HPS
- **175MH** 175W MH *
- **175PM** 175W PM
- **250MH** 250W MH *
- **400MH** 400W MH *
- **40LMH** 400W MH *
- **250PM** 250W PM
- **400PM** 400W PM
- **40LPM** 400W LPM

VOLTAGE

- **12** 120V
- **20** 208V
- **24** 240V
- **27** 277V
- **48** 480V
- **34** 347V
- **MT** MULTIVOLT 120,208,240,277V
- **MA** MULTIVOLT PRE-WIRED (120V)
- **MB** MULTIVOLT PRE-WIRED (208V)
- **MC** MULTIVOLT PRE-WIRED (240V)
- **MD** MULTIVOLT PRE-WIRED (277V)
- **VT** MULTIVOLT 120, 277, 347V (NOT AVAIABLE IN 200W HPS OR 175W PM)

* NOT AVAILAIBLE FOR SHIPMENT IN THE US AFTER 12-31-08 DUE TO EISA 2007 LEGISLATION

TILT RANGE

- **L** LOW TILT, 0°-18°
- **H** HIGH TILT, 27°-45°

OPTICS

- **DC** MEDIUM ROADWAY, CLEAR DROP GLASS
- **DR** MEDIUM ROADWAY, GLASS REFRACTOR
- **FC** FORWARD THROW, CLEAR DROP GLASS
- **FF** FORWARD THROW, FLAT GLASS
- **NC** NARROW ROADWAY, CLEAR DROP GLASS
- **ND** NARROW FLOOD
- **NF** NARROW ROADWAY, FLAT GLASS
- **NR** NARROW ROADWAY, GLASS REFRACTOR
- **SC** SQUARE, CLEAR DROP GLASS
- **SF** SQUARE, FLAT GLASS
- **WC** WIDE ROADWAY, CLEAR DROP GLASS
- **WD** WIDE FLOOD
- **WF** WIDE ROADWAY, FLAT GLASS
- **WR** WIDE ROADWAY, GLASS REFRACTOR

MOUNTING

- **A** ARCHITECTURAL
- **H** HORIZONTAL
- **V** VERTICAL

FINISH

- **G** GRAY
- **K** BLACK
- **N** GREEN
- **W** WHITE
- **Z** BRONZE

OPTIONS

- **B** TERMINAL BLOCK & NEMA DECAL
- **C** NEMA DECAL
- **P** PROTECTED STARTER
- **R** NEMA TWIST-LOCK PHOTOCONTROL RECEPTACLE
- **T** SPADE TERMINATION FOR BALLAST LEADS
- **3** 3" TO 2" TENON ADAPTER
- **6** 6' PIGTAIL

ACCESSORIES

- **F1** SINGLE FUSING (120, 240, 277 & 347V)
- **F2** DOUBLE FUSING (208, 240 & 480V)
- **LAMP**
- **BKT-5-G** GALVANIZED WOOD POLE BRACKET
- **BR-1091-XX** 3" TO 2" TENON ADAPTER

HOLOPHANE®
LEADER IN LIGHTING SOLUTIONS
An AcuityBrands Company

ORDER NO: _____

TYPE: P4B

DRAWING NO.
CAD MODEL: MONGOOSE.DWG
DATE: 1-5-09

©2002 ACUITY LIGHTING GROUP, INC. 214 OAKWOOD AVE. NEWARK, OH 43055

MONGOOSE®

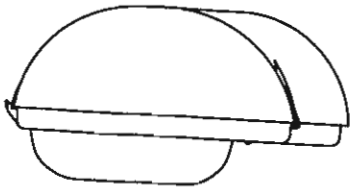

OPTIC TILT RANGE

DC	HIGH
DR	HIGH
FC	LOW
NC	HIGH
NR	ALL
SC	LOW
WC	HIGH
WR	ALL

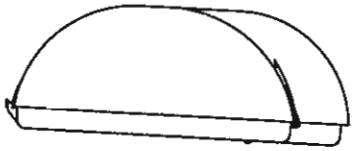

OPTIC TILT RANGE

FF	LOW
ND	HIGH
NF	LOW
SF	LOW
WD	HIGH
WF	LOW

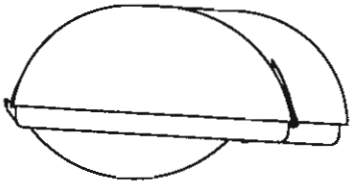

OPTIC TILT RANGE

NC	LOW
WC	LOW

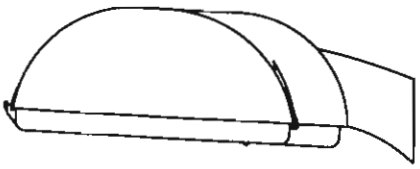

"A" MOUNTING
ATTACHES TO A SQUARE
POLE OR TENON ADAPTOR
USING PATTERN BELOW

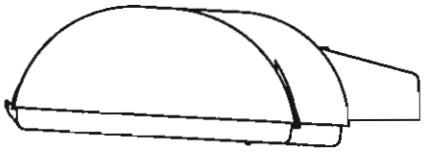

"H" MOUNTING
ATTACHES TO A
2" HORIZONTAL TENON

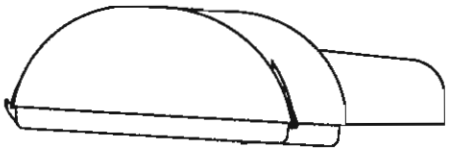

"V" MOUNTING
ATTACHES TO A
2" VERTICAL TENON

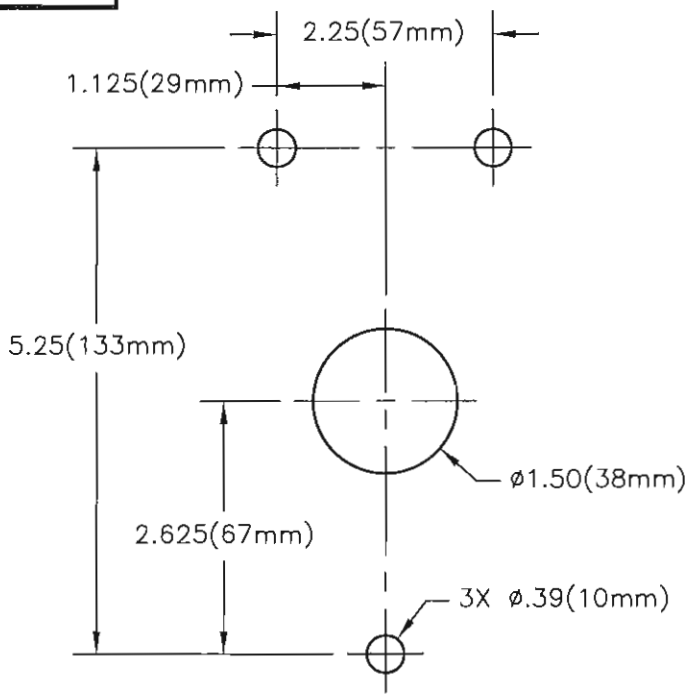

"A" MOUNTING PATTERN

HOLOPHANE®
LEADER IN LIGHTING SOLUTIONS
An AcuityBrands Company

ORDER NO: _____

TYPE: P4B

DRAWING NO. _____
CAD MODEL: MONGOOSE.DWG
DATE: 1-5-09
Sheet 2

©2002 ACUITY LIGHTING GROUP, INC. 214 OAKWOOD AVE. NEWARK, OH 43055

UL/CUL LISTED
MAX AMBIENT: 40°C
MAX WEIGHT: 50lbs (23kg)
EPA: 2.05 sq. ft.

MONGOOSE®

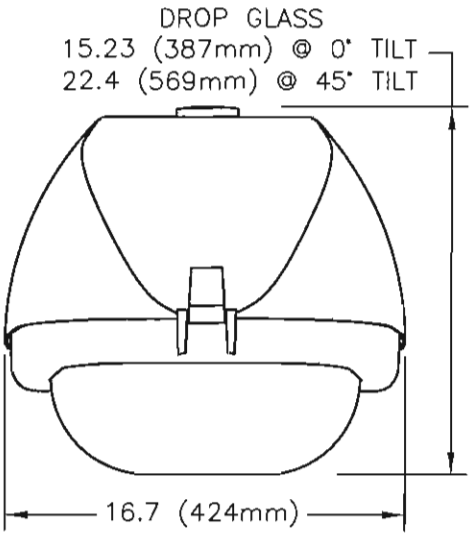

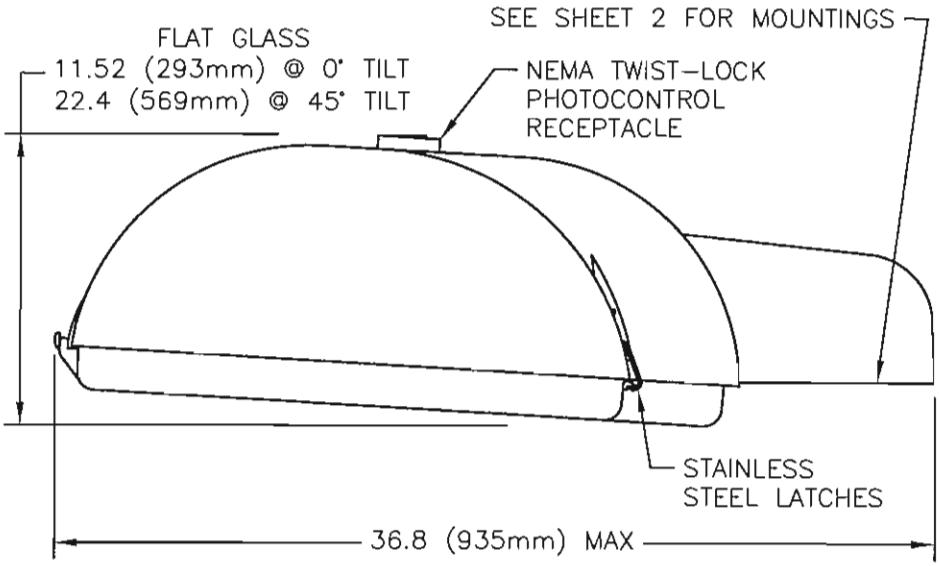

G400HP48LFFVG6 W/LAMP

CATALOG NUMBER

SOURCE AND WATTAGE

- **100HP** 100W HPS
- **15AHP** 150W HPS
- **200HP** 200W HPS
- **250HP** 250W HPS
- **25LHP** 250W HPS
- **400HP** 400W HPS
- **40LHP** 400W HPS
- **175MH** 175W MH *
- **175PM** 175W PM
- **250MH** 250W MH *
- **400MH** 400W MH *
- **40LMH** 400W MH *
- **250PM** 250W PM
- **400PM** 400W PM
- **40LPM** 400W LPM

VOLTAGE

- **12** 120V
- **20** 208V
- **24** 240V
- **27** 277V
- **48** 480V
- **34** 347V
- **MT** MULTIVOLT 120,208,240,277V
- **MA** MULTIVOLT PRE-WIRED (120V)
- **MB** MULTIVOLT PRE-WIRED (208V)
- **MC** MULTIVOLT PRE-WIRED (240V)
- **MD** MULTIVOLT PRE-WIRED (277V)
- **VT** MULTIVOLT 120, 277, 347V (NOT AVAIABLE IN 200W HPS OR 175W PM)

* NOT AVAILAIBLE FOR SHIPMENT IN THE US AFTER 12-31-08 DUE TO EISA 2007 LEGISLATION

TILT RANGE

- **L** LOW TILT, 0°-18°
- **H** HIGH TILT, 27°-45°

OPTICS

- **DC** MEDIUM ROADWAY, CLEAR DROP GLASS
- **DR** MEDIUM ROADWAY, GLASS REFRACTOR
- **FC** FORWARD THROW, CLEAR DROP GLASS
- **FF** FORWARD THROW, FLAT GLASS
- **NC** NARROW ROADWAY, CLEAR DROP GLASS
- **ND** NARROW FLOOD
- **NF** NARROW ROADWAY, FLAT GLASS
- **NR** NARROW ROADWAY, GLASS REFRACTOR
- **SC** SQUARE, CLEAR DROP GLASS
- **SF** SQUARE, FLAT GLASS
- **WC** WIDE ROADWAY, CLEAR DROP GLASS
- **WD** WIDE FLOOD
- **WF** WIDE ROADWAY, FLAT GLASS
- **WR** WIDE ROADWAY, GLASS REFRACTOR

MOUNTING

- **A** ARCHITECTURAL
- **H** HORIZONTAL
- **V** VERTICAL

FINISH

- **G** GRAY
- **K** BLACK
- **N** GREEN
- **W** WHITE
- **Z** BRONZE

OPTIONS

- **B** TERMINAL BLOCK & NEMA DECAL
- **C** NEMA DECAL
- **P** PROTECTED STARTER
- **R** NEMA TWIST-LOCK PHOTOCONTROL RECEPTACLE
- **T** SPADE TERMINATION FOR BALLAST LEADS
- **3** 3" TO 2" TENON ADAPTER
- **6** 6' PIGTAIL

ACCESSORIES

- **F1** SINGLE FUSING (120, 240, 277 & 347V)
- **F2** DOUBLE FUSING (208, 240 & 480V)
- **LAMP**
- **BKT-5-G** GALVANIZED WOOD POLE BRACKET
- **BR-1091-XX** 3" TO 2" TENON ADAPTER

HOLOPHANE®
LEADER IN LIGHTING SOLUTIONS
An AcuityBrands Company

ORDER NO: _____

TYPE: 2P4B

DRAWING NO.
CAD MODEL: MONGOOSE.DWG
DATE: 1-5-09

©2002 ACUITY LIGHTING GROUP, INC. 214 OAKWOOD AVE. NEWARK, OH 43055

MONGOOSE®

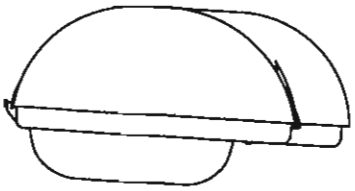

OPTIC TILT RANGE

DC	HIGH
DR	HIGH
FC	LOW
NC	HIGH
NR	ALL
SC	LOW
WC	HIGH
WR	ALL

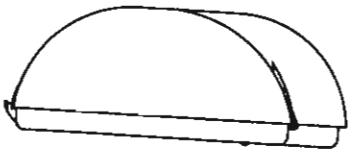

OPTIC TILT RANGE

FF	LOW
ND	HIGH
NF	LOW
SF	LOW
WD	HIGH
WF	LOW

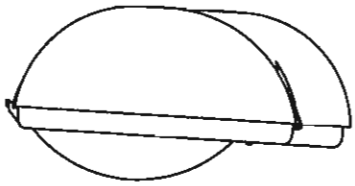

OPTIC TILT RANGE

NC	LOW
WC	LOW

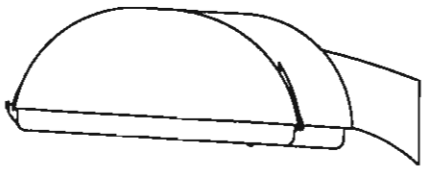

"A" MOUNTING
ATTACHES TO A SQUARE POLE OR TENON ADAPTOR USING PATTERN BELOW

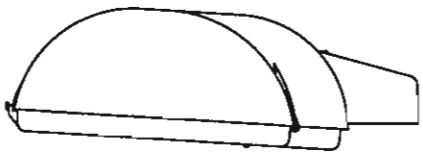

"H" MOUNTING
ATTACHES TO A 2" HORIZONTAL TENON

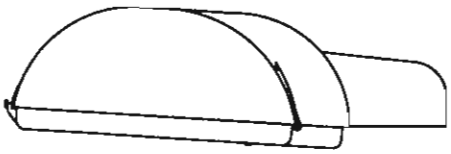

"V" MOUNTING
ATTACHES TO A 2" VERTICAL TENON

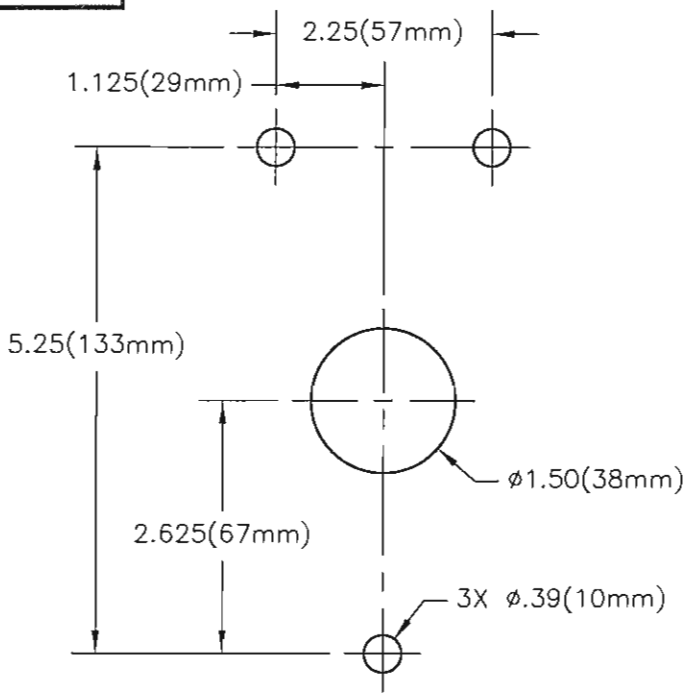

"A" MOUNTING PATTERN

HOLOPHANE®
LEADER IN LIGHTING SOLUTIONS
An AcuityBrands Company

ORDER NO: _____

TYPE: 2P4B

DRAWING NO. _____
CAD MODEL: MONGOOSE.DWG
DATE: 1-5-09
Sheet 2

©2002 ACUITY LIGHTING GROUP, INC. 214 OAKWOOD AVE. NEWARK, OH 43055

UL/CUL LISTED
MAX AMBIENT: 40°C
MAX WEIGHT: 50lbs (23kg)
EPA: 2.05 sq. ft.

MONGOOSE®

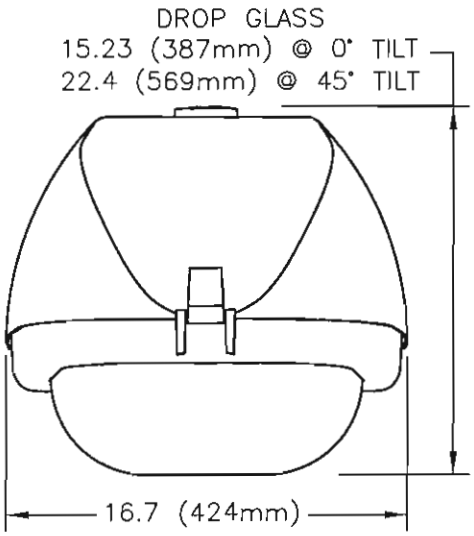

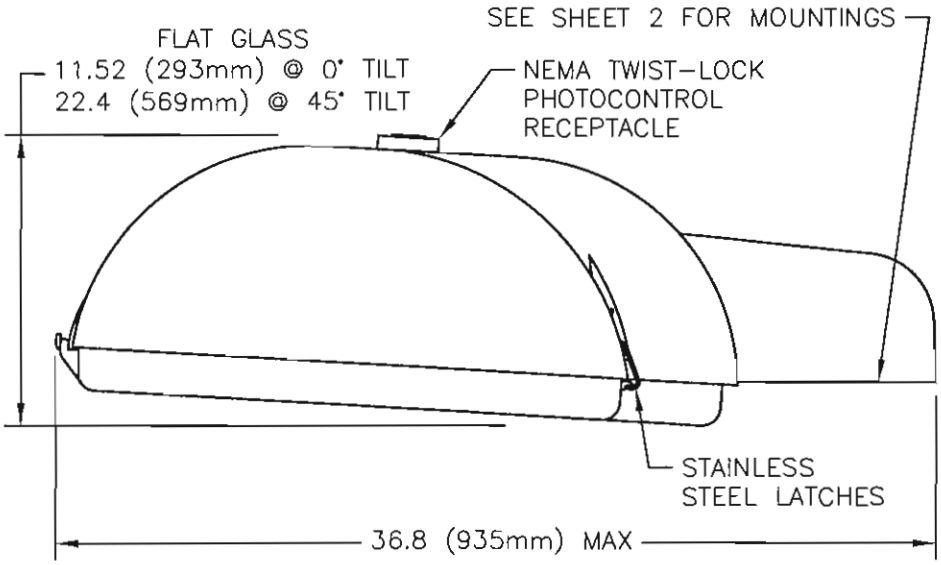

G400HP48LWFVG6 W/LAMP

CATALOG NUMBER

SOURCE AND WATTAGE

- **100HP** 100W HPS
- **15AHP** 150W HPS
- **200HP** 200W HPS
- **250HP** 250W HPS
- **25LHP** 250W HPS
- **400HP** 400W HPS
- **40LHP** 400W HPS
- **175MH** 175W MH *
- **175PM** 175W PM
- **250MH** 250W MH *
- **400MH** 400W MH *
- **40LMH** 400W MH *
- **250PM** 250W PM
- **400PM** 400W PM
- **40LPM** 400W LPM

VOLTAGE

- **12** 120V
- **20** 208V
- **24** 240V
- **27** 277V
- **48** 480V
- **34** 347V
- **MT** MULTIVOLT 120,208,240,277V
- **MA** MULTIVOLT PRE-WIRED (120V)
- **MB** MULTIVOLT PRE-WIRED (208V)
- **MC** MULTIVOLT PRE-WIRED (240V)
- **MD** MULTIVOLT PRE-WIRED (277V)
- **VT** MULTIVOLT 120, 277, 347V (NOT AVAIABLE IN 200W HPS OR 175W PM)

* NOT AVAILAIBLE FOR SHIPMENT IN THE US AFTER 12-31-08 DUE TO EISA 2007 LEGISLATION

TILT RANGE

- **L** LOW TILT, 0°-18°
- **H** HIGH TILT, 27°-45°

OPTICS

- **DC** MEDIUM ROADWAY, CLEAR DROP GLASS
- **DR** MEDIUM ROADWAY, GLASS REFRACTOR
- **FC** FORWARD THROW, CLEAR DROP GLASS
- **FF** FORWARD THROW, FLAT GLASS
- **NC** NARROW ROADWAY, CLEAR DROP GLASS
- **ND** NARROW FLOOD
- **NF** NARROW ROADWAY, FLAT GLASS
- **NR** NARROW ROADWAY, GLASS REFRACTOR
- **SC** SQUARE, CLEAR DROP GLASS
- **SF** SQUARE, FLAT GLASS
- **WC** WIDE ROADWAY, CLEAR DROP GLASS
- **WD** WIDE FLOOD
- **WF** WIDE ROADWAY, FLAT GLASS
- **WR** WIDE ROADWAY, GLASS REFRACTOR

MOUNTING

- **A** ARCHITECTURAL
- **H** HORIZONTAL
- **V** VERTICAL

FINISH

- **G** GRAY
- **K** BLACK
- **N** GREEN
- **W** WHITE
- **Z** BRONZE

OPTIONS

- **B** TERMINAL BLOCK & NEMA DECAL
- **C** NEMA DECAL
- **P** PROTECTED STARTER
- **R** NEMA TWIST-LOCK PHOTOCONTROL RECEPTACLE
- **T** SPADE TERMINATION FOR BALLAST LEADS
- **3** 3" TO 2" TENON ADAPTER
- **6** 6' PIGTAIL

ACCESSORIES

- **F1** SINGLE FUSING (120, 240, 277 & 347V)
- **F2** DOUBLE FUSING (208, 240 & 480V)
- **LAMP**
- **BKT-5-G** GALVANIZED WOOD POLE BRACKET
- **BR-1091-XX** 3" TO 2" TENON ADAPTER

HOLOPHANE®
LEADER IN LIGHTING SOLUTIONS
An AcuityBrands Company

ORDER NO: _____

TYPE: 2P3B

DRAWING NO. _____
CAD MODEL: MONGOOSE.DWG
DATE: 1-5-09

©2002 ACUITY LIGHTING GROUP, INC. 214 OAKWOOD AVE. NEWARK, OH 43055

MONGOOSE®

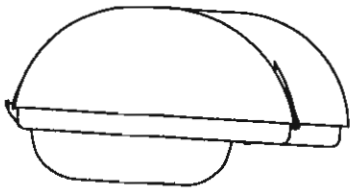

OPTIC TILT RANGE

DC	HIGH
DR	HIGH
FC	LOW
NC	HIGH
NR	ALL
SC	LOW
WC	HIGH
WR	ALL

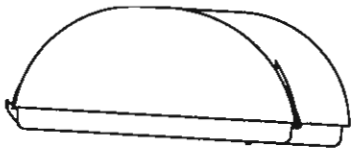

OPTIC TILT RANGE

FF	LOW
ND	HIGH
NF	LOW
SF	LOW
WD	HIGH
WF	LOW

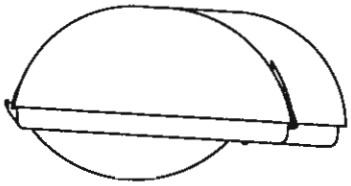

OPTIC TILT RANGE

NC	LOW
WC	LOW

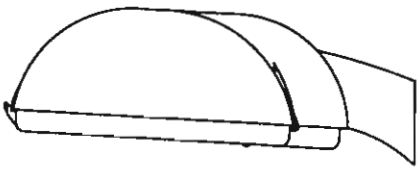

"A" MOUNTING
ATTACHES TO A SQUARE
POLE OR TENON ADAPTOR
USING PATTERN BELOW

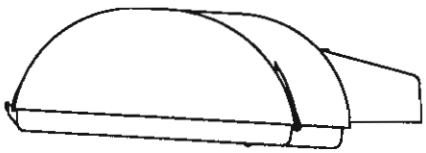

"H" MOUNTING
ATTACHES TO A
2" HORIZONTAL TENON

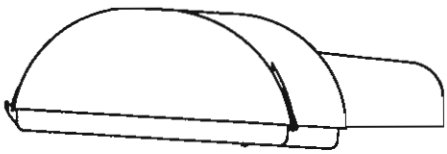

"V" MOUNTING
ATTACHES TO A
2" VERTICAL TENON

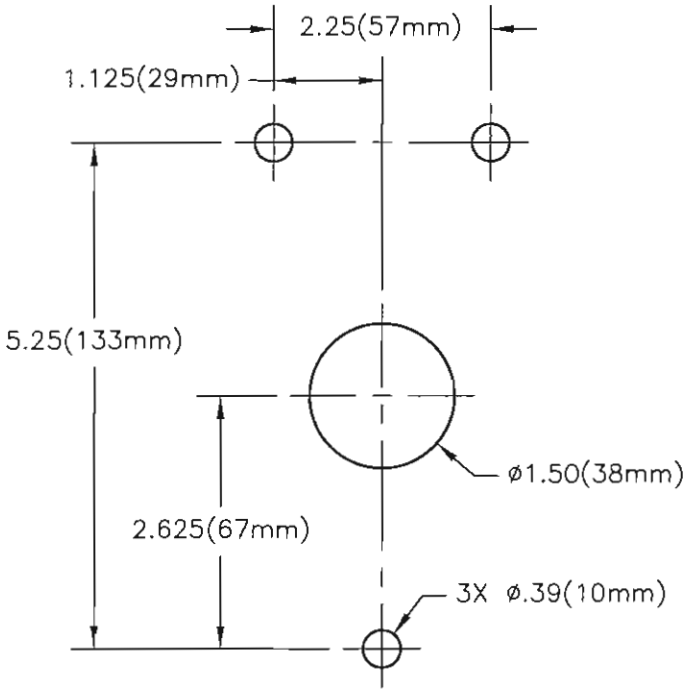

"A" MOUNTING PATTERN

HOLOPHANE®
LEADER IN LIGHTING SOLUTIONS
An AcuityBrands Company

ORDER NO: _____

TYPE: 2P3B

DRAWING NO. _____
CAD MODEL: MONGOOSE.DWG
DATE: 1-5-09
Sheet 2

©2002 ACUITY LIGHTING GROUP, INC. 214 OAKWOOD AVE., NEWARK, OH 43055

UL/CUL LISTED
MAX AMBIENT: 40°C
MAX WEIGHT: 50lbs (23kg)
EPA: 2.05 sq. ft.

MONGOOSE®

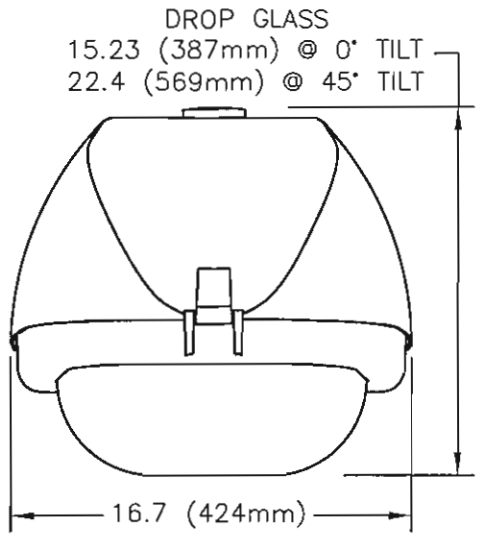

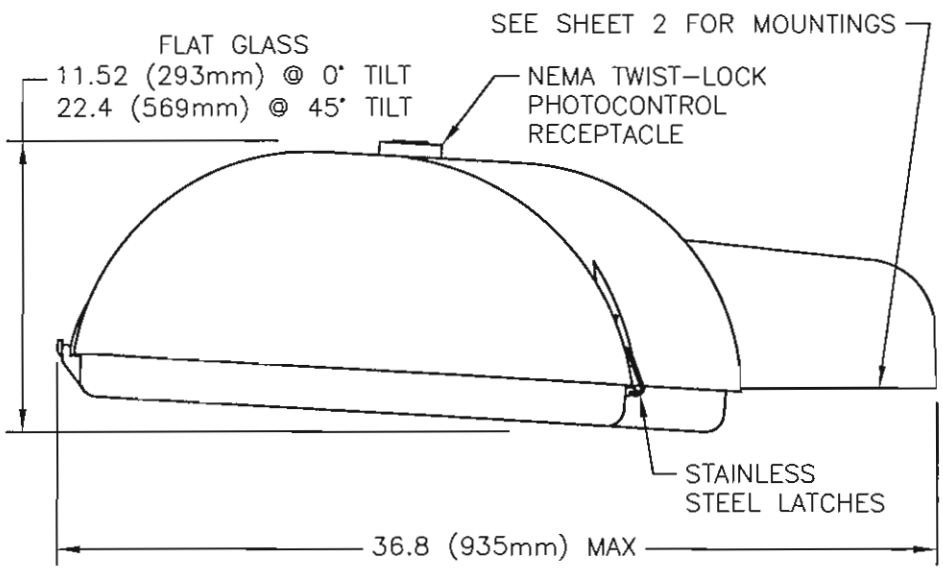

G400HP48LNFVG6 W/LAMP

CATALOG NUMBER

SOURCE AND WATTAGE

- **100HP** 100W HPS
- **15AHP** 150W HPS
- **200HP** 200W HPS
- **250HP** 250W HPS
- **25LHP** 250W HPS
- **400HP** 400W HPS
- **40LHP** 400W HPS
- **175MH** 175W MH *
- **175PM** 175W PM
- **250MH** 250W MH *
- **400MH** 400W MH *
- **40LMH** 400W MH *
- **250PM** 250W PM
- **400PM** 400W PM
- **40LPM** 400W LPM

VOLTAGE

- **12** 120V
- **20** 208V
- **24** 240V
- **27** 277V
- **48** 480V
- **34** 347V
- **MT** MULTIVOLT 120,208,240,277V
- **MA** MULTIVOLT PRE-WIRED (120V)
- **MB** MULTIVOLT PRE-WIRED (208V)
- **MC** MULTIVOLT PRE-WIRED (240V)
- **MD** MULTIVOLT PRE-WIRED (277V)
- **VT** MULTIVOLT 120, 277, 347V (NOT AVAIABLE IN 200W HPS OR 175W PM)

* NOT AVAILAIBLE FOR SHIPMENT IN THE US AFTER 12-31-08 DUE TO EISA 2007 LEGISLATION

TILT RANGE

- **L** LOW TILT, 0°-18°
- **H** HIGH TILT, 27°-45°

OPTICS

- **DC** MEDIUM ROADWAY, CLEAR DROP GLASS
- **DR** MEDIUM ROADWAY, GLASS REFRACTOR
- **FC** FORWARD THROW, CLEAR DROP GLASS
- **FF** FORWARD THROW, FLAT GLASS
- **NC** NARROW ROADWAY, CLEAR DROP GLASS
- **ND** NARROW FLOOD
- **NF** NARROW ROADWAY, FLAT GLASS
- **NR** NARROW ROADWAY, GLASS REFRACTOR
- **SC** SQUARE, CLEAR DROP GLASS
- **SF** SQUARE, FLAT GLASS
- **WC** WIDE ROADWAY, CLEAR DROP GLASS
- **WD** WIDE FLOOD
- **WF** WIDE ROADWAY, FLAT GLASS
- **WR** WIDE ROADWAY, GLASS REFRACTOR

MOUNTING

- **A** ARCHITECTURAL
- **H** HORIZONTAL
- **V** VERTICAL

FINISH

- **G** GRAY
- **K** BLACK
- **N** GREEN
- **W** WHITE
- **Z** BRONZE

OPTIONS

- **B** TERMINAL BLOCK & NEMA DECAL
- **C** NEMA DECAL
- **P** PROTECTED STARTER
- **R** NEMA TWIST-LOCK PHOTOCONTROL RECEPTACLE
- **T** SPADE TERMINATION FOR BALLAST LEADS
- **3** 3" TO 2" TENON ADAPTER
- **6** 6' PIGTAIL

ACCESSORIES

- **F1** SINGLE FUSING (120, 240, 277 & 347V)
- **F2** DOUBLE FUSING (208, 240 & 480V)
- **LAMP**
- **BKT-5-G** GALVANIZED WOOD POLE BRACKET
- **BR-1091-XX** 3" TO 2" TENON ADAPTER

HOLOPHANE®
LEADER IN LIGHTING SOLUTIONS
An AcuityBrands Company

ORDER NO: _____

TYPE: 2P2B

DRAWING NO. _____
CAD MODEL: MONGOOSE.DWG
DATE: 1-5-09

©2002 ACUITY LIGHTING GROUP, INC. 214 OAKWOOD AVE. NEWARK, OH 43055

MONGOOSE®

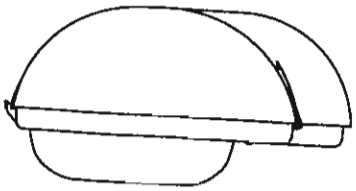

OPTIC TILT RANGE

DC	HIGH
DR	HIGH
FC	LOW
NC	HIGH
NR	ALL
SC	LOW
WC	HIGH
WR	ALL

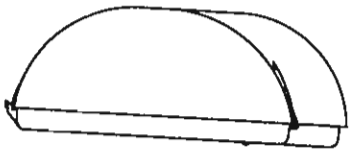

OPTIC TILT RANGE

FF	LOW
ND	HIGH
NF	LOW
SF	LOW
WD	HIGH
WF	LOW

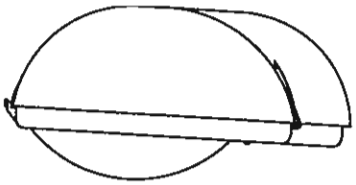

OPTIC TILT RANGE

NC	LOW
WC	LOW

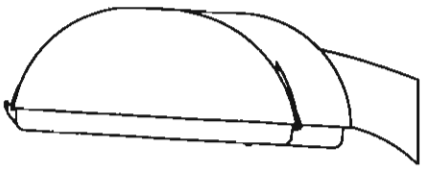

"A" MOUNTING
ATTACHES TO A SQUARE
POLE OR TENON ADAPTOR
USING PATTERN BELOW

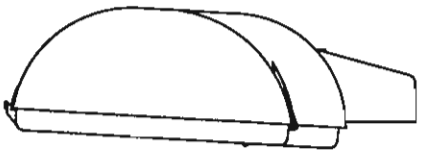

"H" MOUNTING
ATTACHES TO A
2" HORIZONTAL TENON

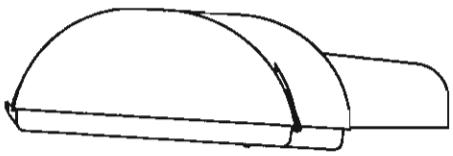

"V" MOUNTING
ATTACHES TO A
2" VERTICAL TENON

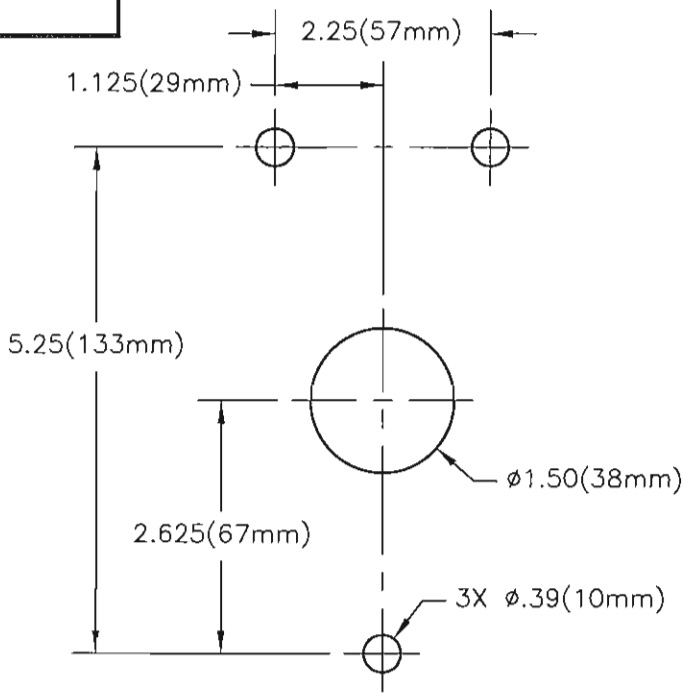

"A" MOUNTING PATTERN

HOLOPHANE®
LEADER IN LIGHTING SOLUTIONS
An AcuityBrands Company

ORDER NO: _____

TYPE: 2P2B

DRAWING NO. _____
CAD MODEL: MONGOOSE.DWG
DATE: 1-5-09
Sheet 2

©2002 ACUITY LIGHTING GROUP, INC. 214 OAKWOOD AVE. NEWARK, OH 43055

UL/CUL LISTED
MAX AMBIENT: 40°C
MAX WEIGHT: 50lbs (23kg)
EPA: 2.05 sq. ft.

MONGOOSE®

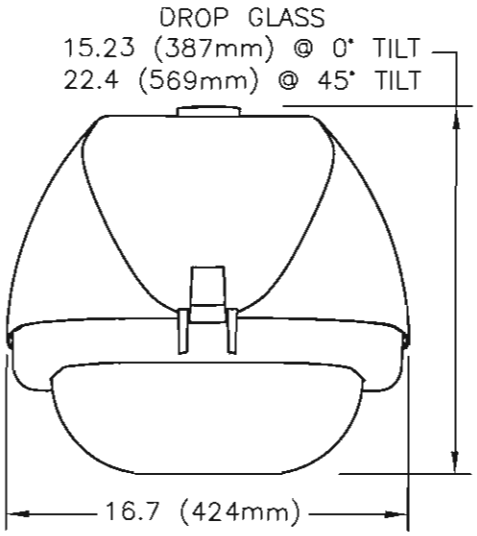

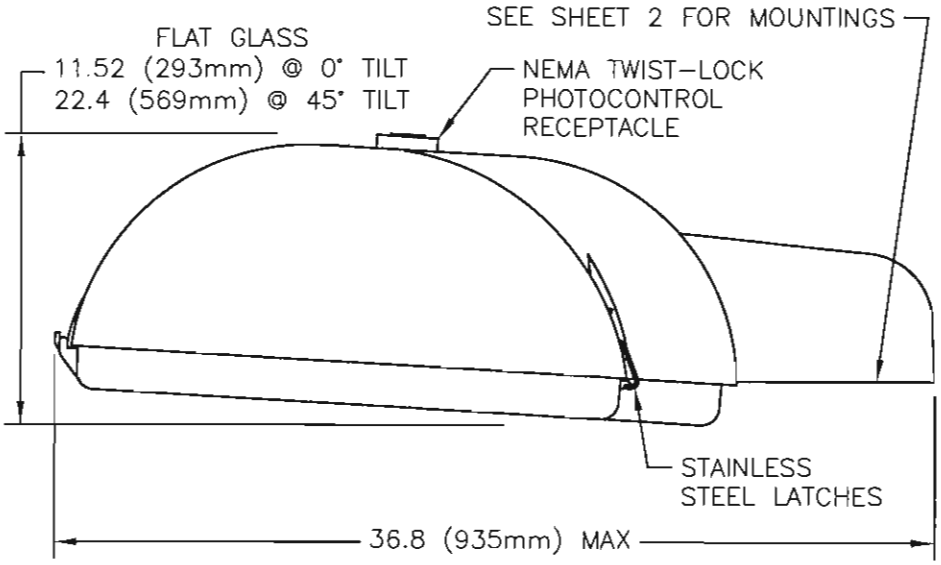

G250HPMTLWFVG6 W/LAMP

CATALOG NUMBER

SOURCE AND WATTAGE

- **100HP** 100W HPS
- **15AHP** 150W HPS
- **200HP** 200W HPS
- **250HP** 250W HPS
- **25LHP** 250W HPS
- **400HP** 400W HPS
- **40LHP** 400W HPS
- **175MH** 175W MH *
- **175PM** 175W PM
- **250MH** 250W MH *
- **400MH** 400W MH *
- **40LMH** 400W MH *
- **250PM** 250W PM
- **400PM** 400W PM
- **40LPM** 400W LPM

VOLTAGE

- **12** 120V
- **20** 208V
- **24** 240V
- **27** 277V
- **48** 480V
- **34** 347V
- **MT** MULTIVOLT 120,208,240,277V
- **MA** MULTIVOLT PRE-WIRED (120V)
- **MB** MULTIVOLT PRE-WIRED (208V)
- **MC** MULTIVOLT PRE-WIRED (240V)
- **MD** MULTIVOLT PRE-WIRED (277V)
- **VT** MULTIVOLT 120, 277, 347V (NOT AVAIABLE IN 200W HPS OR 175W PM)

* NOT AVAILAIBLE FOR SHIPMENT IN THE US AFTER 12-31-08 DUE TO EISA 2007 LEGISLATION

TILT RANGE

- **L** LOW TILT, 0°-18°
- **H** HIGH TILT, 27°-45°

OPTICS

- **DC** MEDIUM ROADWAY, CLEAR DROP GLASS
- **DR** MEDIUM ROADWAY, GLASS REFRACTOR
- **FC** FORWARD THROW, CLEAR DROP GLASS
- **FF** FORWARD THROW, FLAT GLASS
- **NC** NARROW ROADWAY, CLEAR DROP GLASS
- **ND** NARROW FLOOD
- **NF** NARROW ROADWAY, FLAT GLASS
- **NR** NARROW ROADWAY, GLASS REFRACTOR
- **SC** SQUARE, CLEAR DROP GLASS
- **SF** SQUARE, FLAT GLASS
- **WC** WIDE ROADWAY, CLEAR DROP GLASS
- **WD** WIDE FLOOD
- **WF** WIDE ROADWAY, FLAT GLASS
- **WR** WIDE ROADWAY, GLASS REFRACTOR

MOUNTING

- **A** ARCHITECTURAL
- **H** HORIZONTAL
- **V** VERTICAL

FINISH

- **G** GRAY
- **K** BLACK
- **N** GREEN
- **W** WHITE
- **Z** BRONZE

OPTIONS

- **B** TERMINAL BLOCK & NEMA DECAL
- **C** NEMA DECAL
- **P** PROTECTED STARTER
- **R** NEMA TWIST-LOCK PHOTOCONTROL RECEPTACLE
- **T** SPADE TERMINATION FOR BALLAST LEADS
- **3** 3" TO 2" TENON ADAPTER
- **6** 6' PIGTAIL

ACCESSORIES

- **F1** SINGLE FUSING (120, 240, 277 & 347V)
- **F2** DOUBLE FUSING (208, 240 & 480V)
- **LAMP**
- **BKT-5-G** GALVANIZED WOOD POLE BRACKET
- **BR-1091-XX** 3" TO 2" TENON ADAPTER

HOLOPHANE®
LEADER IN LIGHTING SOLUTIONS
An Acuity Brands Company

ORDER NO: _____

TYPE: 2P3AMT

DRAWING NO. _____
CAD MODEL: MONGOOSE.DWG
DATE: 1-5-09

©2002 ACUITY LIGHTING GROUP, INC. 214 OAKWOOD AVE., NEWARK, OH 43055

MONGOOSE®

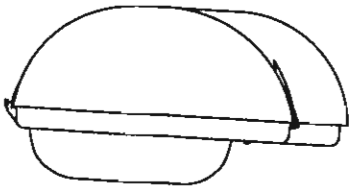

OPTIC TILT RANGE

DC	HIGH
DR	HIGH
FC	LOW
NC	HIGH
NR	ALL
SC	LOW
WC	HIGH
WR	ALL

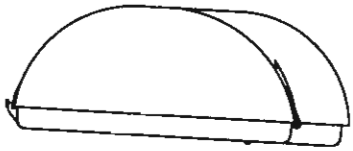

OPTIC TILT RANGE

FF	LOW
ND	HIGH
NF	LOW
SF	LOW
WD	HIGH
WF	LOW

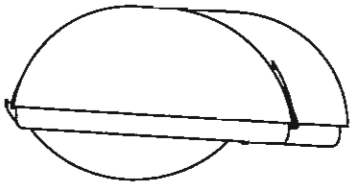

OPTIC TILT RANGE

NC	LOW
WC	LOW

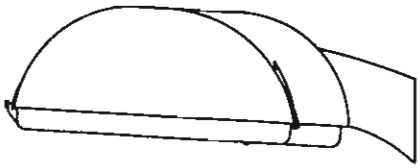

"A" MOUNTING
ATTACHES TO A SQUARE
POLE OR TENON ADAPTOR
USING PATTERN BELOW

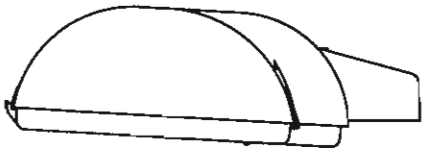

"H" MOUNTING
ATTACHES TO A
2" HORIZONTAL TENON

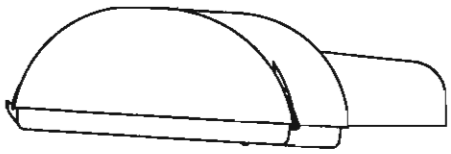

"V" MOUNTING
ATTACHES TO A
2" VERTICAL TENON

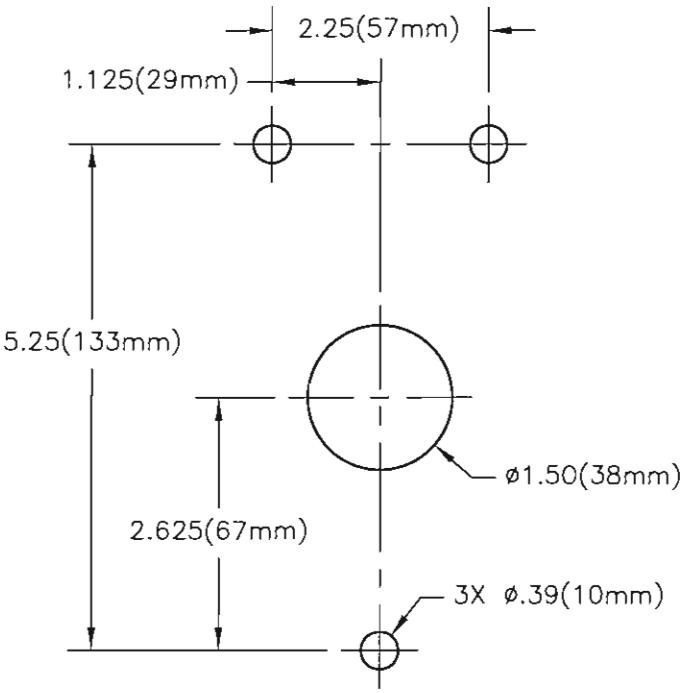

"A" MOUNTING PATTERN

HOLOPHANE®
LEADER IN LIGHTING SOLUTIONS
An AcuityBrands Company

ORDER NO: _____

TYPE: 2P3AMT

DRAWING NO. _____
CAD MODEL: MONGOOSE.DWG
DATE: 1-5-09
Sheet 2

©2002 ACUITY LIGHTING GROUP, INC. 214 OAKWOOD AVE., NEWARK, OH 43055

MONGOOSE®

UL/CUL LISTED
MAX AMBIENT: 40°C
MAX WEIGHT: 50lbs (23kg)
EPA: 2.05 sq. ft.

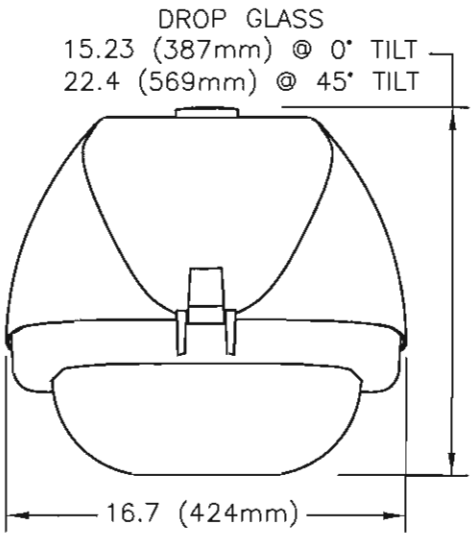

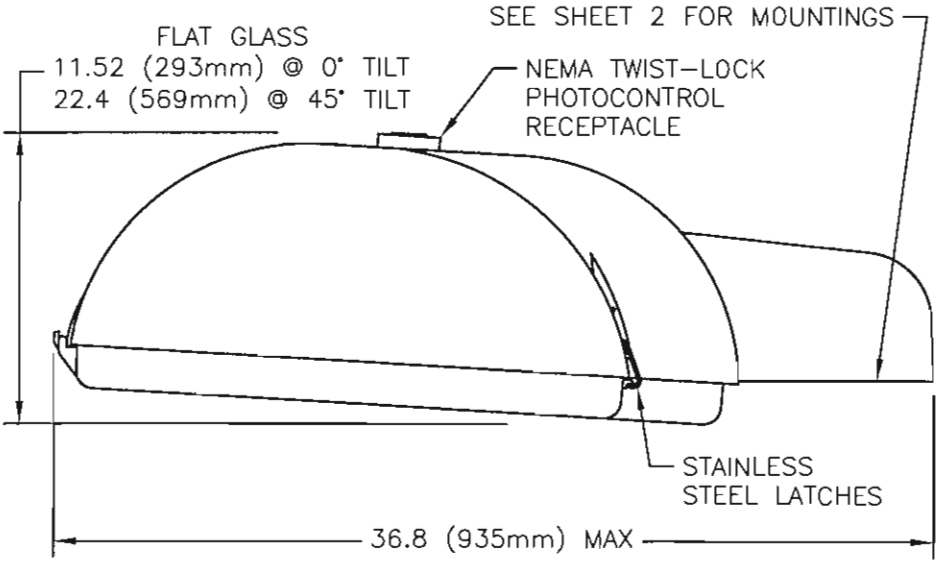

G400HPMTLWFVG6 W/LAMP

CATALOG NUMBER

SOURCE AND WATTAGE

- **100HP** 100W HPS
- **15AHP** 150W HPS
- **200HP** 200W HPS
- **250HP** 250W HPS
- **25LHP** 250W HPS
- **400HP** 400W HPS
- **40LHP** 400W HPS
- **175MH** 175W MH *
- **175PM** 175W PM
- **250MH** 250W MH *
- **400MH** 400W MH *
- **40LMH** 400W MH *
- **250PM** 250W PM
- **400PM** 400W PM
- **40LPM** 400W LPM

VOLTAGE

- **12** 120V
- **20** 208V
- **24** 240V
- **27** 277V
- **48** 480V
- **34** 347V
- **MT** MULTIVOLT 120,208,240,277V
- **MA** MULTIVOLT PRE-WIRED (120V)
- **MB** MULTIVOLT PRE-WIRED (208V)
- **MC** MULTIVOLT PRE-WIRED (240V)
- **MD** MULTIVOLT PRE-WIRED (277V)
- **VT** MULTIVOLT 120, 277, 347V (NOT AVAIABLE IN 200W HPS OR 175W PM)

* NOT AVAILAIBLE FOR SHIPMENT IN THE US AFTER 12-31-08 DUE TO EISA 2007 LEGISLATION

TILT RANGE

- **L** LOW TILT, 0°-18°
- **H** HIGH TILT, 27°-45°

OPTICS

- **DC** MEDIUM ROADWAY, CLEAR DROP GLASS
- **DR** MEDIUM ROADWAY, GLASS REFRACTOR
- **FC** FORWARD THROW, CLEAR DROP GLASS
- **FF** FORWARD THROW, FLAT GLASS
- **NC** NARROW ROADWAY, CLEAR DROP GLASS
- **ND** NARROW FLOOD
- **NF** NARROW ROADWAY, FLAT GLASS
- **NR** NARROW ROADWAY, GLASS REFRACTOR
- **SC** SQUARE, CLEAR DROP GLASS
- **SF** SQUARE, FLAT GLASS
- **WC** WIDE ROADWAY, CLEAR DROP GLASS
- **WD** WIDE FLOOD
- **WF** WIDE ROADWAY, FLAT GLASS
- **WR** WIDE ROADWAY, GLASS REFRACTOR

MOUNTING

- **A** ARCHITECTURAL
- **H** HORIZONTAL
- **V** VERTICAL

FINISH

- **G** GRAY
- **K** BLACK
- **N** GREEN
- **W** WHITE
- **Z** BRONZE

OPTIONS

- **B** TERMINAL BLOCK & NEMA DECAL
- **C** NEMA DECAL
- **P** PROTECTED STARTER
- **R** NEMA TWIST-LOCK PHOTOCONTROL RECEPTACLE
- **T** SPADE TERMINATION FOR BALLAST LEADS
- **3** 3" TO 2" TENON ADAPTER
- **6** 6' PIGTAIL

ACCESSORIES

- **F1** SINGLE FUSING (120, 240, 277 & 347V)
- **F2** DOUBLE FUSING (208, 240 & 480V)
- **LAMP**
- **BKT-5-G** GALVANIZED WOOD POLE BRACKET
- **BR-1091-XX** 3" TO 2" TENON ADAPTER

HOLOPHANE®
LEADER IN LIGHTING SOLUTIONS
An Acuity Brands Company

ORDER NO: _____

TYPE: P3BMT

DRAWING NO. _____
CAD MODEL: MONGOOSE.DWG
DATE: 1-5-09

©2002 ACUITY LIGHTING GROUP, INC. 214 OAKWOOD AVE., NEWARK, OH 43055

MONGOOSE®

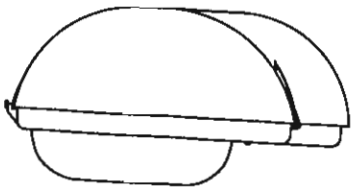

OPTIC	TILT RANGE
DC	HIGH
DR	HIGH
FC	LOW
NC	HIGH
NR	ALL
SC	LOW
WC	HIGH
WR	ALL

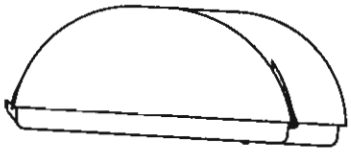

OPTIC	TILT RANGE
FF	LOW
ND	HIGH
NF	LOW
SF	LOW
WD	HIGH
WF	LOW

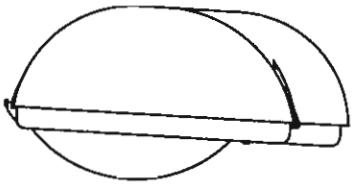

OPTIC	TILT RANGE
NC	LOW
WC	LOW

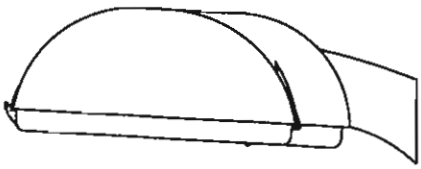

"A" MOUNTING
ATTACHES TO A SQUARE
POLE OR TENON ADAPTOR
USING PATTERN BELOW

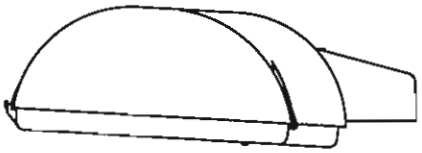

"H" MOUNTING
ATTACHES TO A
2" HORIZONTAL TENON

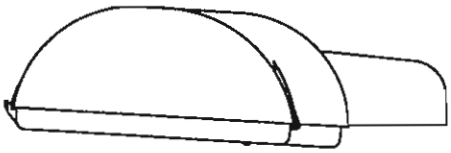

"V" MOUNTING
ATTACHES TO A
2" VERTICAL TENON

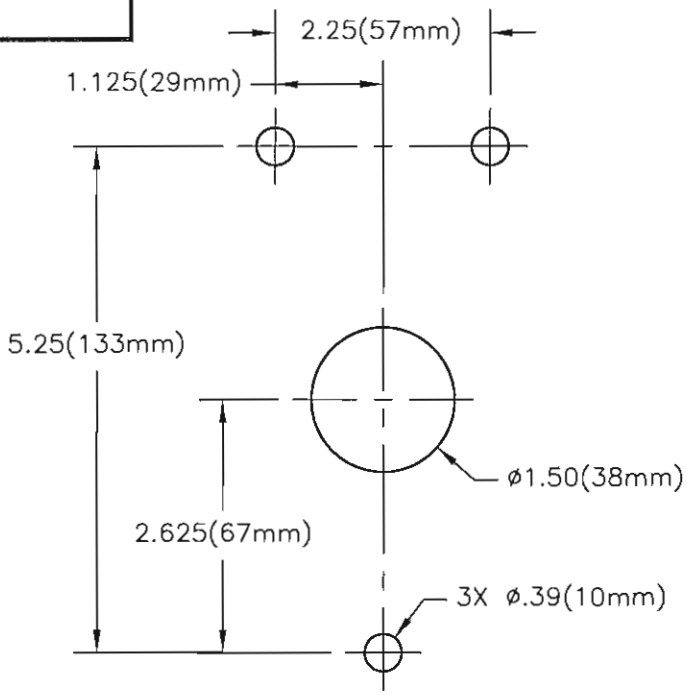

"A" MOUNTING PATTERN

HOLOPHANE®
LEADER IN LIGHTING SOLUTIONS
An AcuityBrands Company

ORDER NO: _____

TYPE: P3BMT

DRAWING NO.
CAD MODEL: MONGOOSE.DWG
DATE: 1-5-09
Sheet 2

©2002 ACUITY LIGHTING GROUP, INC. 214 OAKWOOD AVE. NEWARK, OH 43055

Maximum Weight - 34 Lbs.

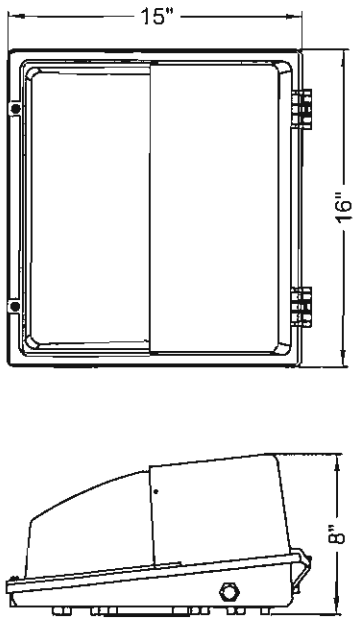

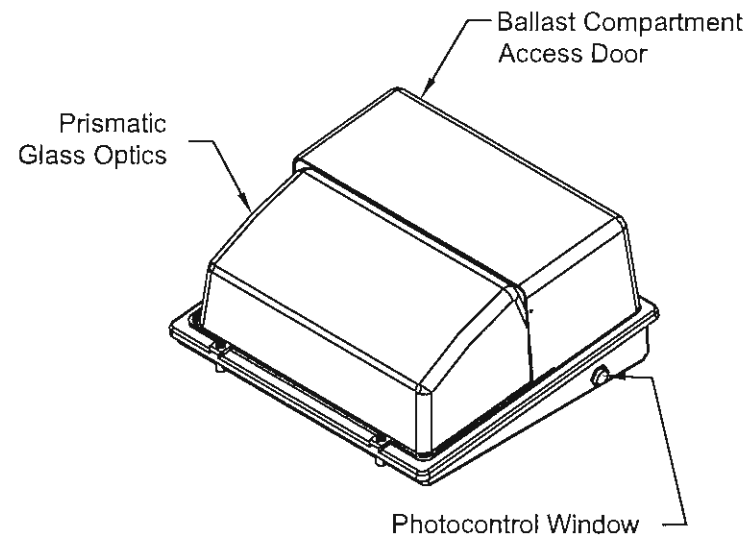

Wallpack® IV

INFRASTUCTURE
OUTDOOR

HOLOPHANE®
LEADER IN LIGHTING SOLUTIONS
An AcuityBrandsCompany

ORDERING INFORMATION:

W4	070	48	U	G	Lamp
Series W4	BALLAST TYPE	VOLTAGE	OPTICS	COLOR	

BALLAST TYPE
- 050HP = 50W HPS, MOG BASE
- 070HP = 70W HPS, MOG BASE
- 100HP = 100W HPS, MOG BASE
- 15AHP = 150W 55V HPS
- 200HP = 200W HPS, MOG BASE
- 250HP = 250W HPS, MOG BASE
- 400HP = 400W HPS, MOG BASE
- 70DMH = 70W MH, MED BASE
- 10DMH = 100W MH, MED BASE
- 15DMH = 150W MH, MED BASE
- 175MH = 175W MH, MOG BASE*
- 175PM = 175W PM, MOG BASE
- 250MH = 250W MH, MOG BASE*
- 250PM = 250W PM, MOG BASE
- 400MH = 400W MH, MOG BASE*
- 320PM = 320W PM, MOG BASE
- 30DIN = 300W MAX INC.
- 42CFL = 42W COMP FLUOR.

*Not available for shipment in the US due to EISA 2007 legislation.

VOLTAGE
- 12 = 120 VOLT CULUS
- 20 = 208 VOLT
- 24 = 240 VOLT
- 27 = 277 VOLT CULUS
- 48 = 480 VOLT
- VT = 120, 277, 347 VOLT CULUS
- MA = MT (PREWIRED TO 120V)
- MB = MT (PREWIRED TO 208V)
- MC = MT (PREWIRED TO 240V)
- MD = MT (PREWIRED TO 277V)

OPTICS
- C = CUTOFF
- S = STANDARD
- U = UNDERPASS

COLOR
- G = GRAY
- K = BLACK
- W = WHITE
- Z = BRONZE

OPTIONS
- B = PHOTOCONTROL
- C = NEMA DECAL
- D = POLYCARBONATE SHIELD
- F1 = SINGLE FUSING 120, 240, 277, 347, MA, MC & MD VOLTS
- F2 = DOUBLE FUSING 208, 240, 480, MB & MC VOLTS
- G = WIRE GUARD
- P = PROTECTED STARTER (HPS ONLY, NOT AVAILABLE WITH VT IN 050, 070, 100 & 150W)
- T = TAMPER RESISTANT SCREWS

ACCESSORIES
- W4TPD = DRIVER FOR TAMPER RESISTANT SCREWS
- LAMP = SHIP APPROPRIATE LAMP AS LINE ITEM

Specifications

DESCRIPTION Wallpack IV is a wall mounted luminaire consisting of a precisely contoured anodized aluminum reflector, thermal shock resistant borosilicate glass refractor, integral HID Holophane ballast and die cast aluminum housing. Luminaire shall have a self hinged door secured by captive fasteners. Ballast and lamp socket shall be completely factory pre-wired and tested. Luminaire shall be designed to mount directly on a wall for surface wiring or over a recessed outlet box. The integral ballast shall provide reliable starting temperatures to -30°C. HID ballast shall be positioned for maximum heat dissipation. Luminaire housings shall be finished with a thermal-setting polyester powder paint coating. Luminaire shall be UL/CUL listed for wet locations.

Maximum Ambient Temperatures:
30°C: 400MH , 250MH, 320PM. 250PM
40°C: 70DMH, 10DMH, 15DMH, 175MH, 175PM, 30DIN, 42CFL. ALL HPS.

TYPE WM70 - W4070HP48UG- LAMP

THIS DRAWING, WHEN APPROVED, SHALL BECOME THE COMPLETE SPECIFICATION FOR THE MATERIAL TO BE FURNISHED BY HOLOPHANE ON THE ORDER NOTED ABOVE. A UNIT OF SIMILAR DESIGN MAY BE SUPPLIED, BUT ONLY AFTER APPROVAL BY THE CUSTOMER IN WRITING. ON POLE ORDERS AN ANCHOR BOLT TEMPLATE (PART) WILL BE SUPPLIED WITH EACH ANCHOR BOLT ASSEMBLY. THIS POLE PROVIDED, THIS PRINT IS THE PROPERTY OF HOLOPHANE AND IS LOANED SUBJECT TO RETURN UPON DEMAND AND UPON EXPRESS CONDITION THAT IT WILL NOT BE USED DIRECTLY OR INDIRECTLY IN ANY WAY DETRIMENTAL TO OUR INTERESTS, AND ONLY IN CONNECTION WITH MATERIAL FURNISHED BY HOLOPHANE

ORDER #:
TYPE:
DRAWN: BRL
DATE: 04/08/10
DWG #: W4

Maximum Weight - 34 Lbs.

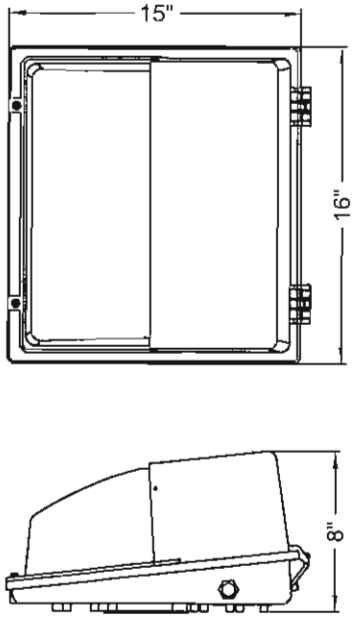

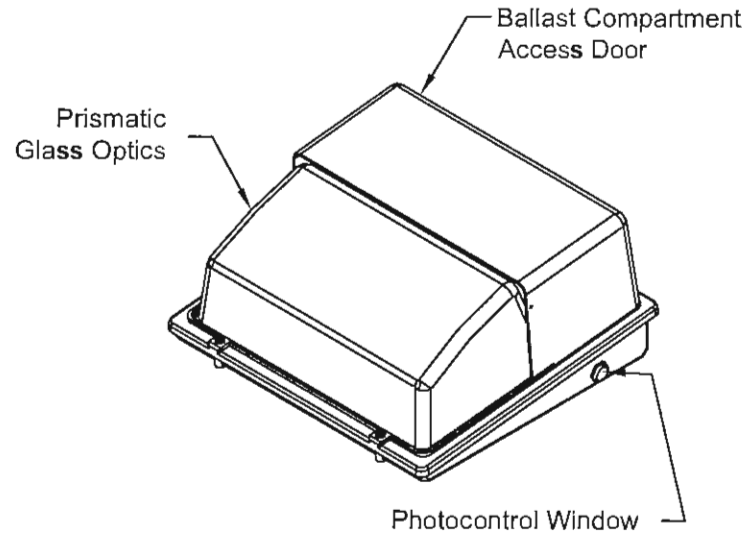

Wallpack® IV

INFRASTUCTURE
OUTDOOR

TYPE WM10 - W4100HP48UG - Lamp

ORDERING INFORMATION:

W4 | 100HP | 48 | U | G | Lamp

Series
W4

BALLAST TYPE
050HP = 50W HPS, MOG BASE
070HP = 70W HPS, MOG BASE
100HP = 100W HPS, MOG BASE
15AHP = 150W 55V HPS
200HP = 200W HPS, MOG BASE
250HP = 250W HPS, MOG BASE
400HP = 400W HPS, MOG BASE
70DMH = 70W MH, MED BASE
10DMH = 100W MH, MED BASE
15DMH = 150W MH, MED BASE
175MH = 175W MH, MOG BASE*
175PM = 175W PM, MOG BASE
250MH = 250W MH, MOG BASE*
250PM = 250W PM, MOG BASE
400MH = 400W MH, MOG BASE*
320PM = 320W PM, MOG BASE
30DIN = 300W MAX INC.
42CFL = 42W COMP FLUOR.

*Not available for shipment in the US due to EISA 2007 legislation.

VOLTAGE
12 = 120 VOLT CULUS
20 = 208 VOLT
24 = 240 VOLT
27 = 277 VOLT CULUS
48 = 480 VOLT
VT = 120, 277, 347 VOLT CULUS
MA = MT (PREWIRED TO 120V)
MB = MT (PREWIRED TO 208V)
MC = MT (PREWIRED TO 240V)
MD = MT (PREWIRED TO 277V)

OPTICS
C = CUTOFF
S = STANDARD
U = UNDERPASS

COLOR
G = GRAY
K = BLACK
W = WHITE
Z = BRONZE

OPTIONS
B = PHOTOCONTROL
C = NEMA DECAL
D = POLYCARBONATE SHIELD
F1 = SINGLE FUSING 120, 240, 277, 347, MA, MC & MD VOLTS
F2 = DOUBLE FUSING 208, 240, 480, MB & MC VOLTS
G = WIRE GUARD
P = PROTECTED STARTER (HPS ONLY, NOT AVAILABLE WITH VT IN 050, 070, 100 & 150W)
T = TAMPER RESISTANT SCREWS

ACCESSORIES
W4TPD = DRIVER FOR TAMPER RESISTANT SCREWS
LAMP = SHIP APPROPRIATE LAMP AS LINE ITEM

HOLOPHANE®
LEADER IN LIGHTING SOLUTIONS
An Acuity Brands Company

THIS DRAWING, WHEN APPROVED, SHALL BECOME THE COMPLETE SPECIFICATION FOR THE MATERIAL TO BE FURNISHED BY HOLOPHANE ON THE ORDER NOTED ABOVE. A UNIT OF SIMILAR DESIGN MAY BE SUPPLIED, BUT ONLY AFTER APPROVAL BY THE CUSTOMER IN WRITING. ON POLE ORDERS ANCHOR BOLT TEMPLATE PRINT WILL BE SENT IN WITH ANCHOR BOLTS. ANCHOR BOLTS ARE NOT PROVIDED. THIS PRINT IS THE PROPERTY OF HOLOPHANE AND IS LOANED SUBJECT TO RETURN UPON DEMAND AND UPON EXPRESS CONDITION THAT IT WILL NOT BE USED DIRECTLY OR INDIRECTLY IN ANY WAY DETRIMENTAL TO OUR INTERESTS, AND ONLY IN CONNECTION WITH MATERIAL FURNISHED BY HOLOPHANE.

Specifications

DESCRIPTION Wallpack IV is a wall mounted luminaire consisting of a precisely contoured anodized aluminum reflector, thermal shock resistant borosilicate glass refractor, integral HID Holophane ballast and die cast aluminum housing. Luminaire shall have a self hinged door secured by captive fasteners. Ballast and lamp socket shall be completely factory pre-wired and tested. Luminaire shall be designed to mount directly on a wall for surface wiring or over a recessed outlet box. The integral ballast shall provide reliable starting temperatures to -30°C. HID ballast shall be positioned for maximum heat dissipation. Luminaire housings shall be finished with a thermal-setting polyester powder paint coating. Luminaire shall be UL/CUL listed for wet locations.

Maximum Ambient Temperatures:
30°C: 400MH , 250MH, 320PM, 250PM
40°C: 70DMH, 10DMH, 15DMH, 175MH, 175PM, 30DIN, 42CFL, ALL HPS.

ORDER #:
TYPE:
DRAWN: BRL
DATE: 04/08/10
DWG #: W4

Union Metal Corporation

CANTON, OHIO 44705

9/9/11 10:32 AM

COMPUTER ANALYSIS OF:

ROUND TAPERED STEEL LIGHTING STRUCTURES

FOR

RALEIGH, NC

DESIGNED TO:

110 MPH WIND - 2001 AASHTO AND CUSTOMER SPECIFICATIONS

DESCRIPTION	PAGE NO.
120' HIGH MAST LIGHTING POLE - 12.18 EPA	2-9
120' HIGH MAST LIGHTING POLE - 17.01 EPA	10-17
45' LIGHTING POLE	18-21

CALCULATIONS BY: Robert McCann

ROBERT MCCANN
PRODUCT ENGINEER

REQ NO. 39608-3

UNION METAL CORPORATION
1432 Maple Avenue NE, Canton, Ohio 44705
Phone:330-456-7653 Fax: 330-456-0196
Mast Arm and Pole Design Program - Version 2.0.2 - July 15, 2007
Engineer: Robert McCann
Phone: 330-458-5257
Fax: 330-458-5276
Email: mccann@unionmetal.com
Computer File: P:\Eng\PE\NC\39608-3\120-12.18EPA.dat
9/7/2011 8:40:24 AM

UMC Reference No. 39608-3
Structure Description: ROUND TAPERED STEEL LIGHTING STRUCTURE
Project Description: RALEIGH, NC
Design Code: 2001 AASHTO SPECIFICATION
Basic Wind Speed: 110 mph
Wind Pressure Method: 2001 AASHTO
Gust Effect Factor: 1.14
Allowable Stress Increase for Wind: 1.33
Ice Loading: 3.0 psf

Structure Design Life: 50 yrs
Wind Importance Factor: 1.00
Wind Exposure: Alpha: 9.5 Zg: 900 ft Zmin: 16.4 ft
Fatigue Category: I
Fatigue Structure Type: High Level Lighting

Galloping:	Importance Factor: N/A	Basic Pressure: 21.0 psf	
Natural Wind Gust:	Importance Factor: 1.00	Basic Pressure: 5.2 psf	Yearly Mean Wind Speed: 11.2 mph
Truck-Induced Gust:	Importance Factor: N/A	Basic Pressure: 18.8 psf	Truck Vehicle Speed: 65 mph

Structure Identification: 120' HIGH MAST LIGHTING POLE - 12.18 EPA

Pole - Structure Data
Number of Tubes: 4
Total Pole Length: 120.00 ft
Tube 1: 0.250 in wall x 21.00 in OD x16.80 in OD x 30.00 ft length
Tube 2: 0.179 in wall x 17.58 in OD x 12.82 in OD x 34.00 ft length w/ 2.75 ft Slip Joint Splice
Tube 3: 0.179 in wall x 13.53 in OD x 9.05 in OD x 32.00 ft length w/ 2.25 ft Slip Joint Splice
Tube 4: 0.179 in wall x 9.69 in OD x 5.39 in OD x 30.75 ft length w/ 1.75 ft Slip Joint Splice
Pole Base Connection Type: Base Plate with Embedded Anchor Bolts
Anchor Bolt Specification: ASTM-F1554 GR 55
Anchor Bolt Diameter: 2.00 in
Number of Bolts: 8
Base Plate Shape: Polygon
Anchor Bolt Orientation: X-axis aligned with bolts
Base Plate Type: Full Weld Backup - Full Pen.
Plate Specification: ASTM-A36
Base Plate Thickness: 2.50 in
Bolt Circle: 26 in
Plate Width: 30.5 in
Pole Signal Loads (lbs)(ft)

No.	Height	Orientation	Weight	Front Area	Side Area	Ice Area	Horz. Cd	H. Offset
1	120	90	771	12.18	12.18	24.36	1.0	2

Pole - Member Geometry (ft) - Section Properties (in)

Member	Yi	Yj	Length	WindHt	Wall	ODi	ODj	AveOD	Si	Sj	Ai	Aj	Ri	Rj	Taper	Shape	Material
1	0.00	4.54	4.54	2.27	0.250	21.00	20.36	20.68	84.50	79.40	16.29	15.79	10.38	10.06	0.14	Round	ASTM A595 GR A
2	4.54	9.08	4.54	6.81	0.250	20.36	19.73	20.05	79.40	74.46	15.79	15.29	10.06	9.74	0.14	Round	ASTM A595 GR A
3	9.08	13.63	4.54	11.35	0.250	19.73	19.09	19.41	74.46	69.68	15.29	14.79	9.74	9.42	0.14	Round	ASTM A595 GR A
4	13.63	18.17	4.54	15.90	0.250	19.09	18.46	18.77	69.68	65.05	14.79	14.29	9.42	9.10	0.14	Round	ASTM A595 GR A
5	18.17	22.71	4.54	20.44	0.250	18.46	17.82	18.14	65.05	60.59	14.29	13.79	9.10	8.79	0.14	Round	ASTM A595 GR A
6	22.71	27.25	4.54	24.98	0.250	17.82	17.19	17.50	60.59	56.28	13.79	13.29	8.79	8.47	0.14	Round	ASTM A595 GR A
7	27.25	30.00	2.75	28.63	0.429	17.58	17.20	17.39	99.06	94.66	23.10	22.58	8.58	8.38	0.14	Round	ASTM A595 GR A
8	30.00	34.83	4.83	32.42	0.179	17.20	16.52	16.86	40.69	37.51	9.56	9.18	8.51	8.17	0.14	Round	ASTM A595 GR A
9	34.83	39.67	4.83	37.25	0.179	16.52	15.84	16.18	37.51	34.47	9.18	8.80	8.17	7.83	0.14	Round	ASTM A595 GR A
10	39.67	44.50	4.83	42.08	0.179	15.84	15.17	15.50	34.47	31.56	8.80	8.42	7.83	7.49	0.14	Round	ASTM A595 GR A
11	44.50	49.33	4.83	46.92	0.179	15.17	14.49	14.83	31.56	28.77	8.42	8.04	7.49	7.15	0.14	Round	ASTM A595 GR A
12	49.33	54.17	4.83	51.75	0.179	14.49	13.81	14.15	28.77	26.11	8.04	7.66	7.15	6.82	0.14	Round	ASTM A595 GR A
13	54.17	59.00	4.83	56.58	0.179	13.81	13.14	13.47	26.11	23.59	7.66	7.28	6.82	6.48	0.14	Round	ASTM A595 GR A
14	59.00	61.25	2.25	60.13	0.358	13.53	13.22	13.37	48.76	46.45	14.81	14.45	6.59	6.43	0.14	Round	ASTM A595 GR A
15	61.25	65.92	4.67	63.58	0.179	13.22	12.56	12.89	23.88	21.55	7.33	6.96	6.52	6.19	0.14	Round	ASTM A595 GR A
16	65.92	70.58	4.67	68.25	0.179	12.56	11.91	12.24	21.55	19.33	6.96	6.59	6.19	5.86	0.14	Round	ASTM A595 GR A
17	70.58	75.25	4.67	72.92	0.179	11.91	11.26	11.58	19.33	17.24	6.59	6.23	5.86	5.54	0.14	Round	ASTM A595 GR A
18	75.25	79.92	4.67	77.58	0.179	11.26	10.60	10.93	17.24	15.26	6.23	5.86	5.54	5.21	0.14	Round	ASTM A595 GR A
19	79.92	84.58	4.67	82.25	0.179	10.60	9.95	10.28	15.26	13.41	5.86	5.49	5.21	4.88	0.14	Round	ASTM A595 GR A
20	84.58	89.25	4.67	86.92	0.179	9.95	9.30	9.62	13.41	11.68	5.49	5.12	4.88	4.56	0.14	Round	ASTM A595 GR A
21	89.25	91.00	1.75	90.13	0.358	9.69	9.45	9.57	24.47	23.21	10.49	10.21	4.67	4.54	0.14	Round	ASTM A595 GR A
22	91.00	95.83	4.83	93.42	0.179	9.45	8.77	9.11	12.06	10.37	5.21	4.83	4.63	4.29	0.14	Round	ASTM A595 GR A
23	95.83	100.67	4.83	98.25	0.179	8.77	8.09	8.43	10.37	8.80	4.83	4.45	4.29	3.96	0.14	Round	ASTM A595 GR A
24	100.67	105.50	4.83	103.08	0.179	8.09	7.42	7.75	8.80	7.36	4.45	4.07	3.96	3.62	0.14	Round	ASTM A595 GR A
25	105.50	110.33	4.83	107.92	0.179	7.42	6.74	7.08	7.36	6.05	4.07	3.69	3.62	3.28	0.14	Round	ASTM A595 GR A
26	110.33	115.17	4.83	112.75	0.179	6.74	6.06	6.40	6.05	4.86	3.69	3.31	3.28	2.94	0.14	Round	ASTM A595 GR A
27	115.17	120.00	4.83	117.58	0.179	6.06	5.39	5.72	4.86	3.81	3.31	2.93	2.94	2.60	0.14	Round	ASTM A595 GR A

Pole - Member Forces (ft & lbs)
Group I

Member	FxiW	FyiW	FziW	MxiW	MyiW	MziW	Fxi	Fyi	Fzi	Mxi	Myi	Mzi	Fxj	Fyj	Fzj	Mxj	Myj	Mzj
1	0	4,356	0	0	0	2,242	0	4,356	0	0	0	2,242	0	4,108	0	0	0	2,242
2	0	4,108	0	0	0	2,242	1	4,108	0	0	0	2,242	1	3,868	0	0	0	2,239
3	0	3,868	0	0	0	2,239	1	3,868	0	0	0	2,239	1	3,635	0	0	0	2,235
4	0	3,635	0	0	0	2,235	1	3,635	0	0	0	2,235	1	3,410	0	0	0	2,230
5	0	3,410	0	0	0	2,230	2	3,410	0	0	0	2,230	1	3,193	0	0	0	2,223
6	0	3,193	0	0	0	2,223	2	3,193	0	0	0	2,223	2	2,984	0	0	0	2,214
7	0	2,984	0	0	0	2,214	2	2,984	0	0	0	2,214	2	2,770	0	0	0	2,209
8	0	2,770	0	0	0	2,209	2	2,770	0	0	0	2,209	2	2,616	0	0	0	2,198
9	0	2,616	0	0	0	2,198	3	2,616	0	0	0	2,198	3	2,468	0	0	0	2,185
10	0	2,468	0	0	0	2,185	3	2,468	0	0	0	2,185	3	2,327	0	0	0	2,169
11	0	2,327	0	0	0	2,169	4	2,327	0	0	0	2,169	4	2,191	0	0	0	2,151
12	0	2,191	0	0	0	2,151	4	2,191	0	0	0	2,151	4	2,062	0	0	0	2,130
13	0	2,062	0	0	0	2,130	5	2,062	0	0	0	2,130	5	1,939	0	0	0	2,107
14	0	1,939	0	0	0	2,107	5	1,939	0	0	0	2,107	5	1,827	0	0	0	2,095
15	0	1,827	0	0	0	2,095	5	1,827	0	0	0	2,095	5	1,714	0	0	0	2,071
16	0	1,714	0	0	0	2,071	6	1,714	0	0	0	2,071	6	1,606	0	0	0	2,043
17	0	1,606	0	0	0	2,043	7	1,606	0	0	0	2,043	6	1,504	0	0	0	2,014
18	0	1,504	0	0	0	2,014	7	1,504	0	0	0	2,014	7	1,408	0	0	0	1,981
19	0	1,408	0	0	0	1,981	8	1,408	0	0	0	1,981	7	1,318	0	0	0	1,945
20	0	1,318	0	0	0	1,945	9	1,318	0	0	0	1,945	8	1,234	0	0	0	1,906
21	0	1,234	0	0	0	1,906	9	1,234	0	0	0	1,906	9	1,172	0	0	0	1,891
22	0	1,172	0	0	0	1,891	9	1,172	0	0	0	1,891	9	1,090	0	0	0	1,847
23	0	1,090	0	0	0	1,847	10	1,090	0	0	0	1,847	10	1,013	0	0	0	1,799

24	0	1,014	0	0	0	1,799	11	1,013	0	0	0	1,799	11	943	0	0	0	1,746
25	0	944	0	0	0	1,746	13	943	0	0	0	1,746	12	880	0	0	0	1,687
26	0	880	0	0	0	1,687	14	880	0	0	0	1,687	13	822	0	0	0	1,620
27	0	822	0	0	0	1,620	17	822	0	0	0	1,620	16	771	0	0	0	1,542
Group II																		
Member	FxiW	FyiW	FziW	MxiW	MyiW	MziW	Fxi	Fyi	Fzi	Mxi	Myi	Mzi	Fxj	Fyj	Fzj	Mxj	Myj	Mzj
1	0	4,356	2,865	-219,837	-1,599	2,113	0	4,344	2,883	-219,837	-1,599	2,106	0	4,097	2,774	-206,993	-1,599	2,105
2	0	4,108	2,757	-206,993	-1,599	2,112	1	4,073	2,808	-206,993	-1,599	2,092	0	3,834	2,701	-194,486	-1,599	2,090
3	0	3,868	2,653	-194,486	-1,597	2,110	1	3,811	2,733	-194,486	-1,599	2,076	1	3,581	2,628	-182,313	-1,599	2,072
4	0	3,635	2,552	-182,313	-1,595	2,106	1	3,557	2,659	-182,314	-1,599	2,057	1	3,336	2,555	-170,474	-1,599	2,052
5	0	3,410	2,454	-170,473	-1,591	2,101	1	3,312	2,586	-170,474	-1,599	2,037	1	3,099	2,478	-158,975	-1,599	2,031
6	0	3,193	2,355	-158,975	-1,586	2,094	2	3,075	2,508	-158,976	-1,599	2,015	2	2,871	2,398	-147,835	-1,599	2,007
7	0	2,984	2,256	-147,834	-1,581	2,087	2	2,855	2,417	-147,835	-1,599	1,996	2	2,645	2,344	-141,289	-1,599	1,991
8	0	2,770	2,194	-141,288	-1,577	2,082	2	2,624	2,367	-141,289	-1,599	1,977	2	2,477	2,250	-130,133	-1,599	1,967
9	0	2,616	2,087	-130,132	-1,569	2,072	2	2,444	2,286	-130,133	-1,599	1,942	2	2,305	2,168	-119,373	-1,599	1,931
10	0	2,468	1,980	-119,371	-1,559	2,060	3	2,272	2,202	-119,373	-1,599	1,905	3	2,141	2,085	-109,015	-1,599	1,892
11	0	2,327	1,876	-109,013	-1,548	2,046	3	2,108	2,118	-109,015	-1,599	1,864	3	1,985	2,002	-99,060	-1,599	1,850
12	0	2,191	1,773	-99,058	-1,534	2,029	4	1,951	2,034	-99,061	-1,599	1,821	3	1,836	1,919	-89,510	-1,599	1,804
13	0	2,062	1,673	-89,507	-1,519	2,011	4	1,802	1,950	-89,510	-1,599	1,774	4	1,695	1,837	-80,360	-1,599	1,755
14	0	1,939	1,577	-80,357	-1,503	1,990	4	1,674	1,855	-80,361	-1,599	1,736	4	1,571	1,793	-76,256	-1,599	1,727
15	0	1,827	1,531	-76,252	-1,494	1,980	4	1,552	1,809	-76,256	-1,599	1,709	4	1,455	1,700	-68,069	-1,599	1,691
16	0	1,714	1,440	-68,065	-1,476	1,958	4	1,426	1,725	-68,070	-1,599	1,660	4	1,336	1,619	-60,271	-1,599	1,641
17	0	1,606	1,351	-60,266	-1,457	1,935	5	1,308	1,642	-60,272	-1,599	1,609	4	1,225	1,539	-52,853	-1,599	1,588
18	0	1,504	1,267	-52,847	-1,435	1,909	5	1,196	1,561	-52,854	-1,599	1,555	5	1,120	1,461	-45,805	-1,599	1,533
19	0	1,408	1,186	-45,798	-1,412	1,882	5	1,092	1,482	-45,806	-1,599	1,499	5	1,022	1,386	-39,114	-1,599	1,476
20	0	1,318	1,108	-39,107	-1,387	1,852	5	994	1,406	-39,116	-1,599	1,440	5	931	1,314	-32,770	-1,599	1,416
21	0	1,234	1,035	-32,761	-1,360	1,820	5	915	1,326	-32,771	-1,600	1,394	5	863	1,283	-30,488	-1,600	1,385
22	0	1,172	1,008	-30,478	-1,349	1,807	5	849	1,292	-30,489	-1,600	1,365	5	789	1,200	-24,470	-1,600	1,339
23	0	1,090	935	-24,459	-1,319	1,772	6	766	1,215	-24,472	-1,600	1,306	5	714	1,127	-18,817	-1,600	1,279
24	0	1,014	867	-18,804	-1,287	1,734	6	692	1,140	-18,819	-1,601	1,246	6	648	1,051	-13,528	-1,601	1,218
25	0	944	796	-13,514	-1,252	1,693	6	629	1,062	-13,531	-1,601	1,187	6	593	971	-8,621	-1,601	1,157
26	0	880	722	-8,604	-1,214	1,648	7	578	980	-8,624	-1,602	1,131	7	551	889	-4,111	-1,602	1,098
27	0	822	646	-4,092	-1,174	1,599	8	542	894	-4,116	-1,602	1,082	8	522	801	-24	-1,602	1,044
Group III																		
Member	FxiW	FyiW	FziW	MxiW	MyiW	MziW	Fxi	Fyi	Fzi	Mxi	Myi	Mzi	Fxj	Fyj	Fzj	Mxj	Myj	Mzj
1	0	5,673	1,545	-124,325	-900	2,614	0	5,670	1,558	-124,325	-900	2,611	0	5,348	1,501	-117,379	-900	2,610
2	0	5,352	1,489	-117,379	-900	2,612	1	5,341	1,526	-117,379	-900	2,606	1	5,030	1,469	-110,579	-900	2,602
3	0	5,040	1,433	-110,579	-899	2,609	1	5,023	1,493	-110,579	-900	2,598	1	4,722	1,436	-103,929	-900	2,592
4	0	4,738	1,380	-103,928	-897	2,603	2	4,714	1,460	-103,929	-900	2,587	2	4,424	1,403	-97,429	-900	2,579
5	0	4,447	1,328	-97,428	-895	2,594	2	4,416	1,426	-97,429	-900	2,574	2	4,136	1,367	-91,086	-900	2,564
6	0	4,165	1,275	-91,085	-892	2,584	3	4,128	1,390	-91,086	-900	2,558	3	3,858	1,329	-84,912	-900	2,546
7	0	3,893	1,222	-84,911	-888	2,571	3	3,853	1,344	-84,912	-900	2,542	3	3,603	1,303	-81,272	-900	2,534
8	0	3,642	1,189	-81,272	-885	2,563	3	3,596	1,321	-81,272	-900	2,529	3	3,380	1,256	-75,046	-900	2,513
9	0	3,424	1,131	-75,045	-880	2,547	4	3,370	1,284	-75,046	-900	2,505	4	3,163	1,217	-69,003	-900	2,485
10	0	3,215	1,074	-69,002	-873	2,527	5	3,152	1,245	-69,003	-900	2,476	5	2,955	1,178	-63,150	-900	2,453
11	0	3,014	1,018	-63,148	-865	2,503	6	2,944	1,205	-63,150	-900	2,444	5	2,756	1,137	-57,491	-900	2,418
12	0	2,822	962	-57,489	-856	2,476	6	2,745	1,164	-57,492	-900	2,408	6	2,567	1,096	-52,031	-900	2,379
13	0	2,639	908	-52,029	-846	2,446	7	2,556	1,122	-52,031	-900	2,368	7	2,387	1,055	-46,771	-900	2,335
14	0	2,465	855	-46,768	-834	2,412	7	2,380	1,070	-46,771	-900	2,329	7	2,247	1,034	-44,405	-900	2,313
15	0	2,330	831	-44,402	-828	2,395	8	2,241	1,047	-44,405	-900	2,306	7	2,086	982	-39,672	-900	2,272
16	0	2,169	781	-39,669	-815	2,360	8	2,076	1,002	-39,673	-900	2,262	8	1,929	938	-35,146	-900	2,225
17	0	2,017	732	-35,142	-802	2,321	9	1,920	958	-35,147	-900	2,214	8	1,782	895	-30,824	-900	2,175
18	0	1,872	685	-30,820	-786	2,279	9	1,772	914	-30,825	-900	2,163	9	1,643	852	-26,705	-900	2,121
19	0	1,736	641	-26,700	-770	2,234	10	1,633	871	-26,706	-900	2,109	9	1,513	811	-22,785	-900	2,063
20	0	1,609	597	-22,779	-752	2,186	11	1,503	828	-22,786	-900	2,051	10	1,391	770	-19,060	-900	2,002

21	0	1,489	556	-19,053	-732	2,133	11	1,386	779	-19,061	-901	1,995	10	1,314	752	-17,721	-901	1,976
22	0	1,414	541	-17,713	-725	2,113	11	1,309	761	-17,721	-900	1,969	10	1,200	702	-14,189	-900	1,917
23	0	1,297	500	-14,180	-703	2,056	12	1,192	715	-14,190	-900	1,905	11	1,092	657	-10,876	-900	1,849
24	0	1,189	461	-10,866	-679	1,995	13	1,085	669	-10,878	-900	1,838	12	995	611	-7,787	-900	1,778
25	0	1,089	420	-7,775	-654	1,929	14	989	621	-7,789	-900	1,768	13	908	561	-4,935	-900	1,703
26	0	999	377	-4,922	-626	1,857	16	903	569	-4,938	-900	1,694	14	832	508	-2,339	-900	1,622
27	0	917	331	-2,323	-597	1,778	17	829	512	-2,342	-900	1,617	16	768	450	-19	-900	1,536

Galloping

Member	FxiW	FyiW	FziW	MxiW	MyiW	MziW	Fxi	Fyi	Fzi	Mxi	Myi	Mzi	Fxj	Fyj	Fzj	Mxj	Myj	Mzj
1	0	0	0	0	0	0	0	0	0	0	0	0	0	0	0	0	0	0
2	0	0	0	0	0	0	0	0	0	0	0	0	0	0	0	0	0	0
3	0	0	0	0	0	0	0	0	0	0	0	0	0	0	0	0	0	0
4	0	0	0	0	0	0	0	0	0	0	0	0	0	0	0	0	0	0
5	0	0	0	0	0	0	0	0	0	0	0	0	0	0	0	0	0	0
6	0	0	0	0	0	0	0	0	0	0	0	0	0	0	0	0	0	0
7	0	0	0	0	0	0	0	0	0	0	0	0	0	0	0	0	0	0
8	0	0	0	0	0	0	0	0	0	0	0	0	0	0	0	0	0	0
9	0	0	0	0	0	0	0	0	0	0	0	0	0	0	0	0	0	0
10	0	0	0	0	0	0	0	0	0	0	0	0	0	0	0	0	0	0
11	0	0	0	0	0	0	0	0	0	0	0	0	0	0	0	0	0	0
12	0	0	0	0	0	0	0	0	0	0	0	0	0	0	0	0	0	0
13	0	0	0	0	0	0	0	0	0	0	0	0	0	0	0	0	0	0
14	0	0	0	0	0	0	0	0	0	0	0	0	0	0	0	0	0	0
15	0	0	0	0	0	0	0	0	0	0	0	0	0	0	0	0	0	0
16	0	0	0	0	0	0	0	0	0	0	0	0	0	0	0	0	0	0
17	0	0	0	0	0	0	0	0	0	0	0	0	0	0	0	0	0	0
18	0	0	0	0	0	0	0	0	0	0	0	0	0	0	0	0	0	0
19	0	0	0	0	0	0	0	0	0	0	0	0	0	0	0	0	0	0
20	0	0	0	0	0	0	0	0	0	0	0	0	0	0	0	0	0	0
21	0	0	0	0	0	0	0	0	0	0	0	0	0	0	0	0	0	0
22	0	0	0	0	0	0	0	0	0	0	0	0	0	0	0	0	0	0
23	0	0	0	0	0	0	0	0	0	0	0	0	0	0	0	0	0	0
24	0	0	0	0	0	0	0	0	0	0	0	0	0	0	0	0	0	0
25	0	0	0	0	0	0	0	0	0	0	0	0	0	0	0	0	0	0
26	0	0	0	0	0	0	0	0	0	0	0	0	0	0	0	0	0	0
27	0	0	0	0	0	0	0	0	0	0	0	0	0	0	0	0	0	0

Natural Wind Gust

Member	FxiW	FyiW	FziW	MxiW	MyiW	MziW	Fxi	Fyi	Fzi	Mxi	Myi	Mzi	Fxj	Fyj	Fzj	Mxj	Myj	Mzj
1	0	0	383	-23,646	-127	0	0	0	383	-23,646	-127	0	0	0	364	-21,949	-127	0
2	0	0	364	-21,949	-127	0	0	0	364	-21,949	-127	0	0	0	346	-20,336	-127	0
3	0	0	346	-20,336	-127	0	0	0	346	-20,336	-127	0	0	0	329	-18,801	-127	0
4	0	0	329	-18,801	-127	0	0	0	329	-18,801	-127	0	0	0	313	-17,344	-127	0
5	0	0	313	-17,344	-127	0	0	0	313	-17,344	-127	0	0	0	296	-15,961	-127	0
6	0	0	296	-15,961	-127	0	0	0	296	-15,961	-127	0	0	0	281	-14,651	-127	0
7	0	0	281	-14,651	-127	0	0	0	281	-14,651	-127	0	0	0	272	-13,891	-127	0
8	0	0	272	-13,891	-127	0	0	0	272	-13,891	-127	0	0	0	256	-12,618	-127	0
9	0	0	256	-12,618	-127	0	0	0	256	-12,618	-127	0	0	0	240	-11,420	-127	0
10	0	0	240	-11,420	-127	0	0	0	240	-11,420	-127	0	0	0	226	-10,294	-127	0
11	0	0	226	-10,294	-127	0	0	0	226	-10,294	-127	0	0	0	212	-9,238	-127	0
12	0	0	212	-9,238	-127	0	0	0	212	-9,238	-127	0	0	0	198	-8,248	-127	0
13	0	0	198	-8,248	-127	0	0	0	198	-8,248	-127	0	0	0	185	-7,321	-127	0
14	0	0	185	-7,321	-127	0	0	0	185	-7,321	-127	0	0	0	180	-6,910	-127	0
15	0	0	180	-6,910	-127	0	0	0	180	-6,910	-127	0	0	0	168	-6,100	-127	0
16	0	0	168	-6,100	-127	0	0	0	168	-6,100	-127	0	0	0	157	-5,343	-127	0
17	0	0	157	-5,343	-127	0	0	0	157	-5,343	-127	0	0	0	146	-4,637	-127	0

18	0	0	146	-4,637	-127	0	0	0	146	-4,637	-127	0	0	0	136	-3,979	-127	0
19	0	0	136	-3,979	-127	0	0	0	136	-3,979	-127	0	0	0	127	-3,366	-127	0
20	0	0	127	-3,366	-127	0	0	0	127	-3,366	-127	0	0	0	118	-2,796	-127	0
21	0	0	118	-2,796	-127	0	0	0	118	-2,796	-127	0	0	0	115	-2,592	-127	0
22	0	0	115	-2,592	-127	0	0	0	115	-2,592	-127	0	0	0	106	-2,059	-127	0
23	0	0	106	-2,059	-127	0	0	0	106	-2,059	-127	0	0	0	98	-1,566	-127	0
24	0	0	98	-1,566	-127	0	0	0	98	-1,566	-127	0	0	0	90	-1,113	-127	0
25	0	0	90	-1,113	-127	0	0	0	90	-1,113	-127	0	0	0	81	-700	-127	0
26	0	0	81	-700	-127	0	0	0	81	-700	-127	0	0	0	73	-329	-127	0
27	0	0	73	-329	-127	0	0	0	73	-329	-127	0	0	0	64	0	-127	0

Truck-Induced Gust

Member	FxiW	FyiW	FziW	MxiW	MyiW	MziW	Fxi	Fyi	Fzi	Mxi	Myi	Mzi	Fxj	Fyj	Fzj	Mxj	Myj	Mzj
1	0	0	0	0	0	0	0	0	0	0	0	0	0	0	0	0	0	0
2	0	0	0	0	0	0	0	0	0	0	0	0	0	0	0	0	0	0
3	0	0	0	0	0	0	0	0	0	0	0	0	0	0	0	0	0	0
4	0	0	0	0	0	0	0	0	0	0	0	0	0	0	0	0	0	0
5	0	0	0	0	0	0	0	0	0	0	0	0	0	0	0	0	0	0
6	0	0	0	0	0	0	0	0	0	0	0	0	0	0	0	0	0	0
7	0	0	0	0	0	0	0	0	0	0	0	0	0	0	0	0	0	0
8	0	0	0	0	0	0	0	0	0	0	0	0	0	0	0	0	0	0
9	0	0	0	0	0	0	0	0	0	0	0	0	0	0	0	0	0	0
10	0	0	0	0	0	0	0	0	0	0	0	0	0	0	0	0	0	0
11	0	0	0	0	0	0	0	0	0	0	0	0	0	0	0	0	0	0
12	0	0	0	0	0	0	0	0	0	0	0	0	0	0	0	0	0	0
13	0	0	0	0	0	0	0	0	0	0	0	0	0	0	0	0	0	0
14	0	0	0	0	0	0	0	0	0	0	0	0	0	0	0	0	0	0
15	0	0	0	0	0	0	0	0	0	0	0	0	0	0	0	0	0	0
16	0	0	0	0	0	0	0	0	0	0	0	0	0	0	0	0	0	0
17	0	0	0	0	0	0	0	0	0	0	0	0	0	0	0	0	0	0
18	0	0	0	0	0	0	0	0	0	0	0	0	0	0	0	0	0	0
19	0	0	0	0	0	0	0	0	0	0	0	0	0	0	0	0	0	0
20	0	0	0	0	0	0	0	0	0	0	0	0	0	0	0	0	0	0
21	0	0	0	0	0	0	0	0	0	0	0	0	0	0	0	0	0	0
22	0	0	0	0	0	0	0	0	0	0	0	0	0	0	0	0	0	0
23	0	0	0	0	0	0	0	0	0	0	0	0	0	0	0	0	0	0
24	0	0	0	0	0	0	0	0	0	0	0	0	0	0	0	0	0	0
25	0	0	0	0	0	0	0	0	0	0	0	0	0	0	0	0	0	0
26	0	0	0	0	0	0	0	0	0	0	0	0	0	0	0	0	0	0
27	0	0	0	0	0	0	0	0	0	0	0	0	0	0	0	0	0	0

Pole - Member Stresses (psi)

Group I

Member	fai	fvi	fbi	Fai	Fvi	Fbi	CSRi	faj	fvj	fbj	Faj	Fvj	Fbj	CSRj
1	267	0	318	33,000	15,764	33,432	0.018	260	0	339	33,000	16,508	33,806	0.018
2	260	0	339	33,000	16,508	33,806	0.018	253	0	361	33,000	17,312	34,204	0.018
3	253	0	361	33,000	17,312	34,204	0.018	246	0	385	33,000	18,150	34,629	0.019
4	246	0	385	33,000	18,150	34,529	0.019	239	0	411	33,000	18,150	35,083	0.019
5	239	0	411	33,000	18,150	35,083	0.019	232	0	440	33,000	18,150	35,569	0.019
6	232	0	440	33,000	18,150	35,569	0.019	224	0	472	33,000	18,150	36,092	0.020
7	129	0	268	33,000	18,150	36,300	0.011	123	0	280	33,000	18,150	36,300	0.011
8	290	0	652	33,000	12,890	31,927	0.029	285	0	703	33,000	13,690	32,356	0.030
9	285	1	703	33,000	13,690	32,356	0.030	280	1	761	33,000	14,577	32,822	0.032
10	280	1	761	33,000	14,577	32,822	0.032	276	1	825	33,000	15,563	33,330	0.033
11	276	1	825	33,000	15,563	33,330	0.033	272	1	897	33,000	16,666	33,885	0.035
12	272	1	897	33,000	16,666	33,885	0.035	269	1	979	33,000	17,905	34,494	0.037

13	269	1	979	33,000	17,905	34,494	0.037	266	1	1,072	33,000	18,150	35,166	0.039
14	131	1	518	33,000	18,150	36,300	0.018	126	1	541	33,000	18,150	36,300	0.019
15	249	1	1,053	33,000	18,150	35,083	0.038	246	1	1,153	33,000	18,150	35,792	0.040
16	246	2	1,153	33,000	18,150	35,792	0.040	244	2	1,268	33,000	18,150	36,300	0.042
17	244	2	1,268	33,000	18,150	36,300	0.042	242	2	1,402	33,000	18,150	36,300	0.046
18	242	2	1,402	33,000	18,150	36,300	0.046	240	2	1,557	33,000	18,150	36,300	0.050
19	240	3	1,557	33,000	18,150	36,300	0.050	240	3	1,741	33,000	18,150	36,300	0.055
20	240	3	1,741	33,000	18,150	36,300	0.055	241	3	1,959	33,000	18,150	36,300	0.061
21	118	2	934	33,000	18,150	36,300	0.029	115	2	978	33,000	18,150	36,300	0.030
22	225	4	1,880	33,000	18,150	36,300	0.059	226	4	2,138	33,000	18,150	36,300	0.066
23	226	4	2,138	33,000	18,150	36,300	0.066	228	4	2,454	33,000	18,150	36,300	0.075
24	228	5	2,454	33,000	18,150	36,300	0.075	232	5	2,848	33,000	18,150	36,300	0.085
25	232	6	2,848	33,000	18,150	36,300	0.085	239	6	3,349	33,000	18,150	36,300	0.099
26	239	8	3,349	33,000	18,150	36,300	0.099	249	8	3,998	33,000	18,150	36,300	0.118
27	249	10	3,998	33,000	18,150	36,300	0.118	263	11	4,859	33,000	18,150	36,300	0.142
Group II														
Member	fai	fvi	fbi	Fai	Fvi	Fbi	CSRi	faj	fvj	fbj	Faj	Fvj	Fbj	CSRj
1	267	467	31,222	43,890	20,966	44,464	0.709	259	472	31,286	43,890	21,955	44,962	0.702
2	258	476	31,286	43,890	21,955	44,962	0.702	251	482	31,346	43,890	23,025	45,491	0.695
3	249	486	31,346	43,890	23,025	45,491	0.695	242	493	31,401	43,890	24,140	46,056	0.688
4	241	497	31,401	43,890	24,140	46,056	0.688	233	505	31,448	43,890	24,140	46,660	0.680
5	232	509	31,448	43,890	24,140	46,660	0.680	225	518	31,489	43,890	24,140	47,307	0.671
6	223	522	31,489	43,890	24,140	47,307	0.671	216	531	31,522	43,890	24,140	48,002	0.662
7	124	306	17,910	43,890	24,140	48,279	0.374	117	309	17,912	43,890	24,140	48,279	0.374
8	274	731	41,677	43,890	17,144	42,463	0.990	270	746	41,632	43,890	18,208	43,034	0.975
9	266	753	41,632	43,890	18,208	43,034	0.975	262	771	41,561	43,890	19,387	43,654	0.960
10	258	779	41,561	43,890	19,387	43,654	0.960	254	799	41,461	43,890	20,699	44,329	0.943
11	250	807	41,461	43,890	20,699	44,329	0.943	247	831	41,323	43,890	22,166	45,066	0.924
12	243	839	41,323	43,890	22,166	45,066	0.924	240	868	41,139	43,890	23,814	45,877	0.904
13	235	876	41,139	43,890	23,814	45,877	0.903	233	911	40,894	43,890	24,140	46,770	0.881
14	113	447	19,782	43,890	24,140	48,279	0.413	109	455	19,703	43,890	24,140	48,279	0.411
15	212	896	38,331	43,890	24,140	46,660	0.828	209	934	37,924	43,890	24,140	47,603	0.803
16	205	941	37,924	43,890	24,140	47,603	0.803	203	987	37,427	43,890	24,140	48,279	0.782
17	198	994	37,427	43,890	24,140	48,279	0.781	197	1,051	36,809	43,890	24,140	48,279	0.769
18	192	1,058	36,809	43,890	24,140	48,279	0.769	191	1,127	36,029	43,890	24,140	48,279	0.753
19	186	1,135	36,029	43,890	24,140	48,279	0.753	186	1,220	35,025	43,890	24,140	48,279	0.732
20	181	1,228	35,025	43,890	24,140	48,279	0.732	182	1,335	33,708	43,890	24,140	48,279	0.705
21	87	645	16,083	43,890	24,140	48,279	0.336	84	665	15,782	43,890	24,140	48,279	0.330
22	163	1,292	30,357	43,890	24,140	48,279	0.635	163	1,423	28,367	43,890	24,140	48,279	0.595
23	159	1,429	28,367	43,890	24,140	48,279	0.595	160	1,596	25,725	43,890	24,140	48,279	0.541
24	156	1,604	25,725	43,890	24,140	48,279	0.541	159	1,822	22,154	43,890	24,140	48,279	0.468
25	155	1,828	22,154	43,890	24,140	48,279	0.468	161	2,116	17,265	43,890	24,140	48,279	0.369
26	157	2,122	17,264	43,890	24,140	48,279	0.369	167	2,514	10,502	43,890	24,140	48,279	0.232
27	164	2,518	10,502	43,890	24,140	48,279	0.232	178	3,072	3,291	43,890	24,140	48,279	0.088
Group III														
Member	fai	fvi	fbi	Fai	Fvi	Fbi	CSRi	faj	fvj	fbj	Faj	Fvj	Fbj	CSRj
1	348	255	17,660	43,890	20,966	44,464	0.405	339	258	17,744	43,890	21,955	44,962	0.403
2	338	261	17,744	43,890	21,955	44,962	0.403	329	265	17,826	43,890	23,025	45,491	0.399
3	328	268	17,826	43,890	23,025	45,491	0.399	319	272	17,905	43,890	24,140	46,056	0.396
4	319	275	17,905	43,890	24,140	46,056	0.396	310	279	17,978	43,890	24,140	46,660	0.392
5	309	283	17,978	43,890	24,140	46,660	0.392	300	287	18,047	43,890	24,140	47,307	0.388
6	299	291	18,047	43,890	24,140	47,307	0.388	290	296	18,112	43,890	24,140	48,002	0.384
7	167	171	10,291	43,890	24,140	48,279	0.217	160	172	10,307	43,890	24,140	48,279	0.217
8	376	409	23,983	43,890	17,144	42,463	0.574	368	417	24,019	43,890	18,208	43,034	0.567
9	367	424	24,019	43,890	18,208	43,034	0.567	359	433	24,037	43,890	19,387	43,654	0.559

10	358	439	24,037	43,890	19,387	43,654	0.559	351	451	24,032	43,890	20,699	44,329	0.551
11	350	457	24,032	43,890	20,699	44,329	0.551	343	471	24,000	43,890	22,166	45,066	0.541
12	341	477	24,000	43,890	22,166	45,066	0.541	335	493	23,934	43,890	23,814	45,877	0.530
13	334	500	23,934	43,890	23,814	45,877	0.530	328	519	23,825	43,890	24,140	46,770	0.517
14	161	255	11,525	43,890	24,140	48,279	0.242	155	259	11,486	43,890	24,140	48,279	0.242
15	306	512	22,345	43,890	24,140	46,660	0.486	300	533	22,132	43,890	24,140	47,603	0.472
16	298	539	22,132	43,890	24,140	47,603	0.472	293	564	21,860	43,890	24,140	48,279	0.460
17	291	570	21,860	43,890	24,140	48,279	0.460	286	601	21,511	43,890	24,140	48,279	0.453
18	285	607	21,511	43,890	24,140	48,279	0.453	280	645	21,060	43,890	24,140	48,279	0.443
19	279	651	21,060	43,890	24,140	48,279	0.443	275	698	20,471	43,890	24,140	48,279	0.431
20	274	704	20,471	43,890	24,140	48,279	0.431	271	763	19,695	43,890	24,140	48,279	0.415
21	132	369	9,397	43,890	24,140	48,279	0.198	129	380	9,220	43,890	24,140	48,279	0.194
22	251	740	17,735	43,890	24,140	48,279	0.374	249	812	16,573	43,890	24,140	48,279	0.350
23	247	817	16,573	43,890	24,140	48,279	0.350	246	910	15,048	43,890	24,140	48,279	0.319
24	244	915	15,048	43,890	24,140	48,279	0.319	245	1,035	13,027	43,890	24,140	48,279	0.277
25	243	1,039	13,027	43,890	24,140	48,279	0.277	246	1,198	10,362	43,890	24,140	48,279	0.223
26	245	1,202	10,362	43,890	24,140	48,279	0.223	252	1,418	7,024	43,890	24,140	48,279	0.155
27	251	1,421	7,024	43,890	24,140	48,279	0.155	262	1,726	4,841	43,890	24,140	48,279	0.111

Galloping							Natural Wind Gust						Truck-Induced Gust					
Member	fbi	Fbi	Ratio i	fbj	Fbj	Ratio j	fbi	Fbi	Ratio i	fbj	Fbj	Ratio j	fbi	Fbi	Ratio i	fbj	Fbj	Ratio j
1	0	12,000	0.000	0	12,000	0.000	3,358	12,000	0.280	3,317	12,000	0.276	0	12,000	0.000	0	12,000	0.000
2	0	12,000	0.000	0	12,000	0.000	3,317	12,000	0.276	3,277	12,000	0.273	0	12,000	0.000	0	12,000	0.000
3	0	12,000	0.000	0	12,000	0.000	3,277	12,000	0.273	3,238	12,000	0.270	0	12,000	0.000	0	12,000	0.000
4	0	12,000	0.000	0	12,000	0.000	3,238	12,000	0.270	3,199	12,000	0.267	0	12,000	0.000	0	12,000	0.000
5	0	12,000	0.000	0	12,000	0.000	3,199	12,000	0.267	3,161	12,000	0.263	0	12,000	0.000	0	12,000	0.000
6	0	12,000	0.000	0	12,000	0.000	3,161	12,000	0.263	3,124	12,000	0.260	0	12,000	0.000	0	12,000	0.000
7	0	12,000	0.000	0	12,000	0.000	1,775	12,000	0.148	1,761	12,000	0.147	0	12,000	0.000	0	12,000	0.000
8	0	12,000	0.000	0	12,000	0.000	4,097	12,000	0.341	4,036	12,000	0.336	0	12,000	0.000	0	12,000	0.000
9	0	12,000	0.000	0	12,000	0.000	4,036	12,000	0.336	3,975	12,000	0.331	0	12,000	0.000	0	12,000	0.000
10	0	12,000	0.000	0	12,000	0.000	3,975	12,000	0.331	3,914	12,000	0.326	0	12,000	0.000	0	12,000	0.000
11	0	12,000	0.000	0	12,000	0.000	3,914	12,000	0.326	3,853	12,000	0.321	0	12,000	0.000	0	12,000	0.000
12	0	12,000	0.000	0	12,000	0.000	3,853	12,000	0.321	3,790	12,000	0.316	0	12,000	0.000	0	12,000	0.000
13	0	12,000	0.000	0	12,000	0.000	3,790	12,000	0.316	3,725	12,000	0.310	0	12,000	0.000	0	12,000	0.000
14	0	12,000	0.000	0	12,000	0.000	1,802	12,000	0.150	1,785	12,000	0.149	0	12,000	0.000	0	12,000	0.000
15	0	12,000	0.000	0	12,000	0.000	3,473	12,000	0.289	3,397	12,000	0.283	0	12,000	0.000	0	12,000	0.000
16	0	12,000	0.000	0	12,000	0.000	3,397	12,000	0.283	3,317	12,000	0.276	0	12,000	0.000	0	12,000	0.000
17	0	12,000	0.000	0	12,000	0.000	3,317	12,000	0.276	3,228	12,000	0.269	0	12,000	0.000	0	12,000	0.000
18	0	12,000	0.000	0	12,000	0.000	3,228	12,000	0.269	3,128	12,000	0.261	0	12,000	0.000	0	12,000	0.000
19	0	12,000	0.000	0	12,000	0.000	3,128	12,000	0.261	3,012	12,000	0.251	0	12,000	0.000	0	12,000	0.000
20	0	12,000	0.000	0	12,000	0.000	3,012	12,000	0.251	2,873	12,000	0.239	0	12,000	0.000	0	12,000	0.000
21	0	12,000	0.000	0	12,000	0.000	1,371	12,000	0.114	1,340	12,000	0.112	0	12,000	0.000	0	12,000	0.000
22	0	12,000	0.000	0	12,000	0.000	2,578	12,000	0.215	2,384	12,000	0.199	0	12,000	0.000	0	12,000	0.000
23	0	12,000	0.000	0	12,000	0.000	2,384	12,000	0.199	2,137	12,000	0.178	0	12,000	0.000	0	12,000	0.000
24	0	12,000	0.000	0	12,000	0.000	2,137	12,000	0.178	1,815	12,000	0.151	0	12,000	0.000	0	12,000	0.000
25	0	12,000	0.000	0	12,000	0.000	1,815	12,000	0.151	1,390	12,000	0.116	0	12,000	0.000	0	12,000	0.000
26	0	12,000	0.000	0	12,000	0.000	1,390	12,000	0.116	811	12,000	0.068	0	12,000	0.000	0	12,000	0.000
27	0	12,000	0.000	0	12,000	0.000	811	12,000	0.068	0	12,000	0.000	0	12,000	0.000	0	12,000	0.000

Pole Base - Connection Stresses (psi) - Strength Design

	Group I	Group II	Group III
Bolt Stress			
Applied Tensile	207	20,307	11,484
Applied Shear	0	217	119
Allowable Tensile	27,500	36,575	36,575
Allowable Shear	16,500	21,945	21,945

Bolt Ratio	0.008	0.555	0.314
Base Plate Stress			
Applied Bending	79	7,731	4,373
Allowable Bending	27,000	35,910	35,910
Ratio	0.003	0.215	0.122

Pole Base - Connection Stresses (psi) - Fatigue Design

	Galloping	Natural Wind	Truck Gust
Ex. 8 - Detail 5 (Connection Bolts)			
Bolt SR	0	2,184	0
Bolt CAFL	7,000	7,000	7,000
Ratio	0.000	0.312	0.000
Ex. 5 - Detail 11 (Full Weld Backup - Full Pen.)			
Tube SR	0	3,358	0
Tube CAFL	4,500	4,500	4,500
Ratio	0.000	0.746	0.000

UNION METAL CORPORATION
1432 Maple Avenue NE, Canton, Ohio 44705
Phone.330-456-7553 Fax: 330-456-0196
Mast Arm and Pole Design Program - Version 2.0.2 - July 15, 2007
Engineer: Robert McCann
Phone: 330-458-5257
Fax: 330-458-5276
Email: mccann@unionmetal.com
Computer File: P:\Eng\PE\NC\39608-3\120-17 01EPA.dat
9/7/2011 8:25:06 AM

UMC Reference No. 39608-3
Structure Description: ROUND TAPERED STEEL LIGHTING STRUCTURE
Project Description: RALEIGH, NC
Design Code: 2001 AASHTO SPECIFICATION
Basic Wind Speed: 110 mph
Wind Pressure Method: 2001 AASHTO
Gust Effect Factor: 1.14
Allowable Stress Increase for Wind: 1.33
Ice Loading: 3.0 psf

Structure Design Life: 50 yrs
Wind Importance Factor. 1.00
Wind Exposure: Alpha: 9.5 Zg: 900 ft Zmin: 16.4 ft
Fatigue Category: I
Fatigue Structure Type: High Level Lighting

Galloping:	Importance Factor: N/A	Basic Pressure: 21.0 psf	
Natural Wind Gust:	Importance Factor: 1.00	Basic Pressure: 5.2 psf	Yearly Mean Wind Speed: 11.2 mph
Truck-Induced Gust:	Importance Factor: N/A	Basic Pressure: 18.8 psf	Truck Vehicle Speed: 65 mph

Structure Identification: 120' HIGH MAST LIGHTING POLE - 17.01 EPA

Pole - Structure Data
Number of Tubes: 4
Total Pole Length: 120.00 ft
Tube 1: 0.250 in wall x 22.00 in OD x17.80 in OD x 30.00 ft length
Tube 2: 0.250 in wall x 18.76 in OD x 15.05 in OD x 26.50 ft length w/ 3.00 ft Slip Joint Splice
Tube 3: 0.179 in wall x 15.80 in OD x 10.90 in OD x 35.00 ft length w/ 2.50 ft Slip Joint Splice
Tube 4: 0.179 in wall x 11.58 in OD x 6.54 in OD x 36.00 ft length w/ 2.00 ft Slip Joint Splice
Pole Base Connection Type: Base Plate with Embedded Anchor Bolts
Anchor Bolt Specification: ASTM-F1554 GR 55
Anchor Bolt Diameter: 2.00 in
Number of Bolts: 8
Base Plate Shape: Polygon
Anchor Bolt Orientation: X-axis aligned with bolts
Base Plate Type: Full Weld Backup - Full Pen.
Plate Specification: ASTM-A36
Base Plate Thickness: 2.50 in
Bolt Circle: 27 in
Plate Width: 31 in
Pole Signal Loads (lbs)(ft)

No.	Height	Orientation	Weight	Front Area	Side Area	Ice Area	Horz. Cd	H. Offset
1	120	90	1347	17.01	17.01	34.02	1.0	2

Pole - Member Geometry (ft) - Section Properties (in)

UNION METAL CORPORATION
1432 Maple Avenue NE, Canton, Ohio 44705
Phone.330-456-7653 Fax: 330-456-0196
Mast Arm and Pole Design Program - Version 2.0.2 - July 15, 2007
Engineer: Robert McCann
Phone: 330-458-5257
Fax: 330-458-5276
Email: mccann@unionmetal.com
Computer File: P:\Eng\PE\NC\39608-3\120-17 01EPA.cat
9/7/2011 8:25:06 AM

UMC Reference No. 39608-3
Structure Description: ROUND TAPERED STEEL LIGHTING STRUCTURE
Project Description: RALEIGH, NC
Design Code: 2001 AASHTO SPECIFICATION
Basic Wind Speed: 110 mph
Wind Pressure Method: 2001 AASHTO
Gust Effect Factor: 1.14
Allowable Stress Increase for Wind: 1.33
Ice Loading: 0.0 psf

Structure Design Life: 50 yrs
Wind Importance Factor. 1.00
Wind Exposure: Alpha: 9.5 Zg: 900 ft Zmin: 16.4 ft
Fatigue Category: I
Fatigue Structure Type: High Level Lighting

Galloping:	Importance Factor: N/A	Basic Pressure: 21.0 psf	
Natural Wind Gust:	Importance Factor: 1.00	Basic Pressure: 5.2 psf	Yearly Mean Wind Speed: 11.2 mph
Truck-Induced Gust:	Importance Factor: N/A	Basic Pressure: 18.8 psf	Truck Vehicle Speed: 65 mph

Structure Identification: 120' HIGH MAST LIGHTING POLE - 17.01 EPA

Pole - Structure Data
Number of Tubes: 4
Total Pole Length: 120.00 ft
Tube 1: 0.250 in wall x 22.00 in OD x17.90 in OD x 30.00 ft length
Tube 2: 0.250 in wall x 18.76 in OD x 15.05 in OD x 26.50 ft length w/ 3.00 ft Slip Joint Splice
Tube 3: 0.179 in wall x 15.80 in OD x 10.90 in OD x 35.00 ft length w/ 2.50 ft Slip Joint Splice
Tube 4: 0.179 in wall x 11.58 in OD x 6.54 in OD x 36.00 ft length w/ 2.00 ft Slip Joint Splice
Pole Base Connection Type; Base Plate with Embedded Anchor Bolts
Anchor Bolt Specification: ASTM-F1554 GR 55
Anchor Bolt Diameter: 2.00 in
Number of Bolts: 8
Base Plate Shape: Polygon
Anchor Bolt Orientation; X-axis aligned with bolts
Base Plate Type: Full Weld Backup - Full Pen.
Plate Specification: ASTM-A36
Base Plate Thickness: 2.50 in
Bolt Circle: 27 in
Plate Width: 31 in
Pole Signal Loads (lbs)(ft)

No.	Height	Orientation	Weight	Front Area	Side Area	Ice Area	Horz. Cd	H. Offset
1	120	90	1347	17.01	17.01	34.02	1.0	2

Pole - Member Geometry (ft) - Section Properties (in)

UNION METAL CORPORATION
1432 Maple Avenue NE, Canton, Ohio 44705
Phone.330-456-7553 Fax: 330-456-0196
Mast Arm and Pole Design Program - Version 2.0.2 - July 15, 2007
Engineer: Robert McCann
Phone: 330-458-5257
Fax: 330-458-5276
Email: mccann@unionmetal.com
Computer File: P:\Eng\PE\NC\39608-3\120-17 01EPA.dat
9/7/2011 8:25:06 AM

UMC Reference No. 39608-3
Structure Description: ROUND TAPERED STEEL LIGHTING STRUCTURE
Project Description: RALEIGH, NC
Design Code: 2001 AASHTO SPECIFICATION
Basic Wind Speed: 110 mph
Wind Pressure Method: 2001 AASHTO
Gust Effect Factor: 1.14
Allowable Stress Increase for Wind: 1.33
Ice Loading: 3.0 psf

Structure Design Life: 50 yrs
Wind Importance Factor: 1.00
Wind Exposure: Alpha: 9.5 Zg: 900 ft Zmin: 16.4 ft
Fatigue Category: I
Fatigue Structure Type: High Level Lighting

Galloping:	Importance Factor: N/A	Basic Pressure: 21.0 psf	
Natural Wind Gust:	Importance Factor: 1.00	Basic Pressure: 5.2 psf	Yearly Mean Wind Speed: 11.2 mph
Truck-Induced Gust:	Importance Factor: N/A	Basic Pressure: 18.8 psf	Truck Vehicle Speed: 65 mph

Structure Identification: 120' HIGH MAST LIGHTING POLE - 17.01 EPA

Pole - Structure Data
Number of Tubes: 4
Total Pole Length: 120.00 ft
Tube 1: 0.250 in wall x 22.00 in OD x17.80 in OD x 30.00 ft length
Tube 2: 0.250 in wall x 18.76 in OD x 15.05 in OD x 26.50 ft length w/ 3.00 ft Slip Joint Splice
Tube 3: 0.179 in wall x 15.80 in OD x 10.90 in OD x 35.00 ft length w/ 2.50 ft Slip Joint Splice
Tube 4: 0.179 in wall x 11.58 in OD x 6.54 in OD x 36.00 ft length w/ 2.00 ft Slip Joint Splice
Pole Base Connection Type: Base Plate with Embedded Anchor Bolts
Anchor Bolt Specification: ASTM-F1554 GR 55
Anchor Bolt Diameter: 2.00 in
Number of Bolts: 8
Base Plate Shape: Polygon
Anchor Bolt Orientation: X-axis aligned with bolts
Base Plate Type: Full Weld Backup - Full Pen.
Plate Specification: ASTM-A36
Base Plate Thickness: 2.50 in
Bolt Circle: 27 in
Plate Width: 31 in
Pole Signal Loads (lbs)(ft)

No.	Height	Orientation	Weight	Front Area	Side Area	Ice Area	Horz. Cd	H. Offset
1	120	90	1347	17.01	17.01	34.02	1.0	2

Pole - Member Geometry (ft) - Section Properties (in)

Member	Yi	Yj	Length	WindHt	Wall	ODi	ODj	AveOD	Si	Sj	Ai	Aj	Ri	Rj	Taper	Shape	Material
1	0.00	4.50	4.50	2.25	0.250	22.00	21.37	21.69	92.84	87.54	17.07	16.58	10.88	10.56	0.14	Round	ASTM A595 GR A
2	4.50	9.00	4.50	6.75	0.250	21.37	20.74	21.06	87.54	82.39	16.58	16.08	10.56	10.25	0.14	Round	ASTM A595 GR A
3	9.00	13.50	4.50	11.25	0.250	20.74	20.11	20.43	82.39	77.40	16.08	15.59	10.25	9.93	0.14	Round	ASTM A595 GR A
4	13.50	18.00	4.50	15.75	0.250	20.11	19.48	19.80	77.40	72.57	15.59	15.10	9.93	9.62	0.14	Round	ASTM A595 GR A
5	18.00	22.50	4.50	20.25	0.250	19.48	18.85	19.17	72.57	67.89	15.10	14.60	9.62	9.30	0.14	Round	ASTM A595 GR A
6	22.50	27.00	4.50	24.75	0.250	18.85	18.22	18.54	67.89	63.37	14.60	14.11	9.30	8.99	0.14	Round	ASTM A595 GR A
7	27.00	30.00	3.00	28.50	0.500	18.76	18.34	18.55	130.87	124.92	28.67	28.01	9.13	8.92	0.14	Round	ASTM A595 GR A
8	30.00	34.20	4.20	32.10	0.250	18.34	17.75	18.05	64.22	60.12	14.20	13.74	9.05	8.75	0.14	Round	ASTM A595 GR A
9	34.20	38.40	4.20	36.30	0.250	17.75	17.16	17.46	60.12	56.14	13.74	13.28	8.75	8.46	0.14	Round	ASTM A595 GR A
10	38.40	42.60	4.20	40.50	0.250	17.16	16.58	16.87	56.14	52.31	13.28	12.82	8.46	8.16	0.14	Round	ASTM A595 GR A
11	42.60	46.80	4.20	44.70	0.250	16.58	15.99	16.28	52.31	48.61	12.82	12.35	8.16	7.87	0.14	Round	ASTM A595 GR A
12	46.80	51.00	4.20	48.90	0.250	15.99	15.40	15.69	48.61	45.04	12.35	11.89	7.87	7.58	0.14	Round	ASTM A595 GR A
13	51.00	53.50	2.50	52.25	0.429	15.80	15.45	15.63	79.57	75.98	20.71	20.23	7.69	7.51	0.14	Round	ASTM A595 GR A
14	53.50	57.86	4.36	55.68	0.179	15.45	14.84	15.15	32.77	30.20	8.58	8.24	7.64	7.33	0.14	Round	ASTM A595 GR A
15	57.86	62.21	4.36	60.04	0.179	14.84	14.23	14.54	30.20	27.74	8.24	7.90	7.33	7.03	0.14	Round	ASTM A595 GR A
16	62.21	66.57	4.36	64.39	0.179	14.23	13.62	13.93	27.74	25.39	7.90	7.55	7.03	6.72	0.14	Round	ASTM A595 GR A
17	66.57	70.93	4.36	68.75	0.179	13.62	13.01	13.32	25.39	23.13	7.55	7.21	6.72	6.42	0.14	Round	ASTM A595 GR A
18	70.93	75.29	4.36	73.11	0.179	13.01	12.40	12.71	23.13	20.99	7.21	6.87	6.42	6.11	0.14	Round	ASTM A595 GR A
19	75.29	79.64	4.36	77.46	0.179	12.40	11.79	12.10	20.99	18.94	6.87	6.53	6.11	5.81	0.14	Round	ASTM A595 GR A
20	79.64	84.00	4.36	81.82	0.179	11.79	11.18	11.49	18.94	17.01	6.53	6.18	5.81	5.50	0.14	Round	ASTM A595 GR A
21	84.00	86.00	2.00	85.00	0.358	11.56	11.30	11.44	35.39	33.65	12.61	12.30	5.61	5.47	0.14	Round	ASTM A595 GR A
22	86.00	90.86	4.86	88.43	0.179	11.30	10.62	10.96	17.38	15.32	6.25	5.87	5.56	5.22	0.14	Round	ASTM A595 GR A
23	90.86	95.71	4.86	93.29	0.179	10.62	9.94	10.28	15.32	13.39	5.87	5.49	5.22	4.88	0.14	Round	ASTM A595 GR A
24	95.71	100.57	4.86	98.14	0.179	9.94	9.26	9.60	13.39	11.59	5.49	5.10	4.88	4.54	0.14	Round	ASTM A595 GR A
25	100.57	105.43	4.86	103.00	0.179	9.26	8.58	8.92	11.59	9.92	5.10	4.72	4.54	4.20	0.14	Round	ASTM A595 GR A
26	105.43	110.29	4.86	107.86	0.179	8.58	7.90	8.24	9.92	8.38	4.72	4.34	4.20	3.86	0.14	Round	ASTM A595 GR A
27	110.29	115.14	4.86	112.71	0.179	7.90	7.22	7.56	8.38	6.97	4.34	3.96	3.86	3.52	0.14	Round	ASTM A595 GR A
28	115.14	120.00	4.86	117.57	0.179	7.22	6.54	6.88	6.97	5.69	3.96	3.58	3.52	3.18	0.14	Round	ASTM A595 GR A

Pole - Member Forces (ft & lbs)

Group I

Member	FxiW	FyiW	FziW	MxiW	MyiW	MziW	Fxi	Fyi	Fzi	Mxi	Myi	Mzi	Fxj	Fyj	Fzj	Mxj	Myj	Mzj
1	0	5,595	0	0	0	4,052	0	5,595	0	0	0	4,052	0	5,337	0	0	0	4,051
2	0	5,337	0	0	0	4,051	1	5,337	0	0	0	4,051	1	5,087	0	0	0	4,046
3	0	5,087	0	0	0	4,046	2	5,087	0	0	0	4,046	2	4,844	0	0	0	4,038
4	0	4,844	0	0	0	4,038	3	4,844	0	0	0	4,038	2	4,609	0	0	0	4,027
5	0	4,609	0	0	0	4,027	3	4,609	0	0	0	4,027	3	4,382	0	0	0	4,012
6	0	4,382	0	0	0	4,012	4	4,382	0	0	0	4,012	4	4,162	0	0	0	3,995
7	0	4,162	0	0	0	3,995	4	4,162	0	0	0	3,995	4	3,873	0	0	0	3,982
8	0	3,873	0	0	0	3,982	5	3,873	0	0	0	3,982	4	3,673	0	0	0	3,963
9	0	3,673	0	0	0	3,963	5	3,673	0	0	0	3,963	5	3,480	0	0	0	3,942
10	0	3,480	0	0	0	3,942	6	3,480	0	0	0	3,942	5	3,294	0	0	0	3,918
11	0	3,294	0	0	0	3,918	6	3,294	0	0	0	3,918	6	3,114	0	0	0	3,892
12	0	3,114	0	0	0	3,892	7	3,114	0	0	0	3,892	7	2,941	0	0	0	3,864
13	0	2,941	0	0	0	3,864	7	2,941	0	0	0	3,864	7	2,766	0	0	0	3,846
14	0	2,766	0	0	0	3,846	8	2,766	0	0	0	3,846	7	2,642	0	0	0	3,814
15	0	2,642	0	0	0	3,814	9	2,642	0	0	0	3,814	8	2,522	0	0	0	3,777
16	0	2,522	0	0	0	3,777	10	2,522	0	0	0	3,777	9	2,408	0	0	0	3,735
17	0	2,408	0	0	0	3,735	11	2,408	0	0	0	3,735	10	2,298	0	0	0	3,688
18	0	2,298	0	0	0	3,688	12	2,298	0	0	0	3,688	12	2,194	0	0	0	3,636
19	0	2,194	0	0	0	3,636	14	2,194	0	0	0	3,636	13	2,094	0	0	0	3,578
20	0	2,094	0	0	0	3,578	15	2,094	0	0	0	3,578	14	2,000	0	0	0	3,514
21	0	2,000	0	0	0	3,514	16	2,000	0	0	0	3,514	15	1,915	0	0	0	3,483
22	0	1,915	0	0	0	3,483	17	1,915	0	0	0	3,483	16	1,815	0	0	0	3,405

23	0	1,815	0	0	0	3,405	18	1,815	0	0	0	3,405	17	1,721	0	0	0	3,318
24	0	1,721	0	0	0	3,318	20	1,721	0	0	0	3,318	19	1,634	0	0	0	3,221
25	0	1,634	0	0	0	3,221	23	1,634	0	0	0	3,221	22	1,553	0	0	0	3,113
26	0	1,553	0	0	0	3,113	26	1,552	0	0	0	3,113	24	1,478	0	0	0	2,991
27	0	1,478	0	0	0	2,991	29	1,478	0	0	0	2,991	28	1,409	0	0	0	2,853
28	0	1,409	0	0	0	2,853	33	1,409	0	0	0	2,853	32	1,347	0	0	0	2,694
Group II																		
Member	FxiW	FyiW	FziW	MxiW	MyiW	MziW	Fxi	Fyi	Fzi	Mxi	Myi	Mzi	Fxj	Fyj	Fzj	Mxj	Myj	Mzj
1	0	5,595	3,247	-264,897	-2,353	3,859	0	5,581	3,270	-264,897	-2,353	3,849	0	5,324	3,157	-250,436	-2,353	3,847
2	0	5,337	3,135	-250,436	-2,352	3,857	1	5,296	3,203	-250,437	-2,353	3,827	1	5,048	3,091	-236,275	-2,353	3,822
3	0	5,087	3,026	-236,275	-2,349	3,853	2	5,020	3,136	-236,276	-2,353	3,801	2	4,780	3,026	-222,413	-2,353	3,794
4	0	4,844	2,921	-222,412	-2,345	3,845	2	4,752	3,069	-222,413	-2,353	3,771	2	4,520	2,960	-208,848	-2,353	3,761
5	0	4,609	2,619	-208,847	-2,339	3,835	3	4,492	3,003	-208,849	-2,353	3,737	3	4,269	2,891	-195,589	-2,353	3,724
6	0	4,382	2,716	-195,588	-2,330	3,821	4	4,240	2,932	-195,590	-2,353	3,700	3	4,026	2,817	-182,654	-2,353	3,684
7	0	4,162	2,612	-182,652	-2,320	3,805	4	4,007	2,844	-182,655	-2,353	3,667	4	3,722	2,756	-174,255	-2,353	3,656
8	0	3,873	2,540	-174,252	-2,312	3,793	4	3,705	2,779	-174,255	-2,353	3,640	4	3,512	2,667	-162,820	-2,353	3,623
9	0	3,673	2,440	-162,818	-2,301	3,775	5	3,488	2,699	-162,821	-2,353	3,600	4	3,302	2,586	-151,725	-2,353	3,581
10	0	3,480	2,341	-151,721	-2,288	3,756	5	3,278	2,617	-151,725	-2,353	3,557	5	3,100	2,504	-140,973	-2,353	3,536
11	0	3,294	2,243	-140,969	-2,273	3,734	5	3,075	2,534	-140,973	-2,352	3,511	5	2,905	2,421	-130,568	-2,352	3,488
12	0	3,114	2,146	-130,564	-2,256	3,710	6	2,880	2,451	-130,569	-2,352	3,462	6	2,717	2,339	-120,513	-2,352	3,438
13	0	2,941	2,051	-120,507	-2,238	3,684	6	2,701	2,357	-120,513	-2,353	3,419	6	2,534	2,282	-114,714	-2,353	3,405
14	0	2,766	1,994	-114,709	-2,227	3,668	6	2,514	2,304	-114,715	-2,352	3,381	6	2,401	2,193	-104,920	-2,352	3,354
15	0	2,642	1,896	-104,914	-2,205	3,638	7	2,369	2,227	-104,921	-2,352	3,316	7	2,263	2,117	-95,458	-2,352	3,286
16	0	2,522	1,801	-95,451	-2,181	3,604	8	2,231	2,151	-95,459	-2,352	3,245	7	2,131	2,043	-86,325	-2,352	3,212
17	0	2,408	1,708	-86,316	-2,155	3,567	9	2,099	2,076	-86,326	-2,352	3,170	8	2,005	1,969	-77,516	-2,352	3,134
18	0	2,298	1,618	-77,505	-2,125	3,525	9	1,973	2,001	-77,517	-2,352	3,090	9	1,886	1,897	-69,025	-2,352	3,051
19	0	2,194	1,531	-69,013	-2,093	3,479	10	1,854	1,929	-69,027	-2,353	3,005	10	1,773	1,827	-60,847	-2,353	2,962
20	0	2,094	1,448	-60,833	-2,057	3,428	11	1,741	1,857	-60,849	-2,353	2,916	10	1,666	1,759	-52,973	-2,353	2,869
21	0	2,000	1,367	-52,957	-2,019	3,372	11	1,647	1,777	-52,974	-2,354	2,840	11	1,573	1,722	-49,476	-2,354	2,818
22	0	1,915	1,330	-49,459	-2,000	3,345	12	1,554	1,739	-49,478	-2,353	2,789	11	1,477	1,631	-41,298	-2,353	2,734
23	0	1,815	1,243	-41,279	-1,954	3,277	12	1,447	1,657	-41,301	-2,353	2,686	12	1,377	1,554	-33,507	-2,353	2,527
24	0	1,721	1,161	-33,485	-1,903	3,203	13	1,349	1,578	-33,511	-2,354	2,579	13	1,286	1,480	-26,088	-2,354	2,515
25	0	1,634	1,083	-26,063	-1,849	3,122	15	1,260	1,502	-26,092	-2,355	2,470	14	1,203	1,408	-19,028	-2,355	2,400
26	0	1,553	1,010	-18,999	-1,790	3,032	16	1,180	1,427	-19,033	-2,356	2,359	15	1,130	1,338	-12,321	-2,356	2,283
27	0	1,478	939	-12,288	-1,726	2,932	18	1,112	1,353	-12,327	-2,356	2,249	17	1,070	1,262	-5,982	-2,356	2,165
28	0	1,409	866	-5,943	-1,656	2,820	20	1,059	1,271	-5,989	-2,357	2,144	19	1,024	1,179	-45	-2,357	2,049
Group III																		
Member	FxiW	FyiW	FziW	MxiW	MyiW	MziW	Fxi	Fyi	Fzi	Mxi	Myi	Mzi	Fxj	Fyj	Fzj	Mxj	Myj	Mzj
1	0	7,051	1,731	-146,770	-1,301	4,614	1	7,047	1,748	-146,770	-1,301	4,611	1	6,713	1,688	-139,039	-1,301	4,509
2	0	6,716	1,673	-139,039	-1,301	4,612	2	6,704	1,720	-139,039	-1,301	4,603	1	6,380	1,661	-131,433	-1,301	4,596
3	0	6,392	1,615	-131,433	-1,299	4,605	3	6,372	1,692	-131,434	-1,301	4,589	2	6,058	1,633	-123,954	-1,301	4,578
4	0	6,077	1,559	-123,953	-1,296	4,594	4	6,050	1,654	-123,954	-1,301	4,571	3	5,746	1,604	-116,602	-1,301	4,555
5	0	5,772	1,505	-116,602	-1,292	4,578	5	5,737	1,635	-116,603	-1,301	4,548	4	5,443	1,573	-109,386	-1,301	4,528
6	0	5,477	1,450	-109,385	-1,287	4,558	6	5,435	1,603	-109,386	-1,301	4,520	5	5,151	1,540	-102,316	-1,301	4,495
7	0	5,192	1,395	-102,314	-1,280	4,533	6	5,145	1,559	-102,316	-1,301	4,490	6	4,814	1,510	-97,713	-1,301	4,472
8	0	4,859	1,357	-97,711	-1,275	4,515	6	4,808	1,527	-97,713	-1,301	4,467	6	4,551	1,464	-91,432	-1,301	4,441
9	0	4,600	1,304	-91,430	-1,268	4,488	7	4,544	1,488	-91,433	-1,301	4,434	7	4,295	1,425	-85,317	-1,301	4,404
10	0	4,349	1,250	-85,315	-1,259	4,458	8	4,288	1,448	-85,317	-1,301	4,396	8	4,048	1,384	-79,372	-1,301	4,363
11	0	4,107	1,198	-79,369	-1,249	4,425	9	4,040	1,406	-79,372	-1,301	4,355	8	3,810	1,342	-73,601	-1,301	4,319
12	0	3,873	1,146	-73,598	-1,239	4,388	10	3,802	1,364	-73,601	-1,301	4,311	9	3,580	1,300	-68,007	-1,301	4,272
13	0	3,646	1,095	-68,003	-1,227	4,349	10	3,575	1,314	-68,007	-1,301	4,266	9	3,373	1,271	-64,775	-1,301	4,242
14	0	3,444	1,064	-64,772	-1,219	4,324	10	3,366	1,288	-64,776	-1,301	4,235	10	3,194	1,224	-59,304	-1,301	4,191
15	0	3,267	1,011	-59,300	-1,205	4,279	12	3,183	1,250	-59,305	-1,301	4,178	11	3,018	1,186	-53,999	-1,301	4,129
16	0	3,098	960	-53,993	-1,190	4,228	13	3,008	1,212	-54,000	-1,301	4,116	12	2,851	1,148	-48,859	-1,301	4,061
17	0	2,936	909	-48,853	-1,172	4,171	14	2,840	1,173	-48,860	-1,301	4,047	14	2,690	1,110	-43,885	-1,301	3,986

18	0	2,780	860	-43,878	-1,152	4,108	16	2,680	1,135	-43,887	-1,301	3,972	15	2,538	1,073	-39,078	-1,301	3,905
19	0	2,633	813	-39,070	-1,131	4,039	17	2,528	1,097	-39,079	-1,301	3,891	16	2,393	1,035	-34,436	-1,301	3,618
20	0	2,492	767	-34,426	-1,108	3,963	19	2,383	1,058	-34,437	-1,301	3,803	18	2,255	998	-29,957	-1,301	3,723
21	0	2,358	722	-29,946	-1,082	3,880	19	2,249	1,012	-29,958	-1,301	3,714	19	2,150	979	-27,968	-1,301	3,676
22	0	2,256	702	-27,956	-1,070	3,840	20	2,144	992	-27,969	-1,300	3,666	19	2,010	925	-23,315	-1,300	3,571
23	0	2,114	654	-23,301	-1,039	3,740	22	2,000	945	-23,317	-1,300	3,556	21	1,875	881	-18,863	-1,300	3,453
24	0	1,981	608	-18,867	-1,005	3,631	24	1,866	900	-18,886	-1,300	3,438	22	1,750	838	-14,668	-1,300	3,326
25	0	1,857	564	-14,650	-969	3,512	26	1,742	854	-14,671	-1,300	3,311	24	1,635	795	-10,667	-1,300	3,189
26	0	1,741	522	-10,647	-929	3,382	29	1,628	809	-10,671	-1,300	3,176	27	1,530	751	-6,883	-1,300	3,041
27	0	1,635	482	-6,859	-887	3,238	32	1,524	763	-6,887	-1,300	3,031	30	1,436	704	-3,329	-1,300	2,882
28	0	1,538	440	-3,301	-840	3,078	35	1,432	710	-3,334	-1,300	2,875	34	1,353	650	-32	-1,300	2,708

Galloping

Member	FxiW	FyiW	FziW	MxiW	MyiW	MziW	Fxi	Fyi	Fzi	Mxi	Myi	Mzi	Fxj	Fyj	Fzj	Mxj	Myj	Mzj
1	0	0	0	0	0	0	0	0	0	0	0	0	0	0	0	0	0	0
2	0	0	0	0	0	0	0	0	0	0	0	0	0	0	0	0	0	0
3	0	0	0	0	0	0	0	0	0	0	0	0	0	0	0	0	0	0
4	0	0	0	0	0	0	0	0	0	0	0	0	0	0	0	0	0	0
5	0	0	0	0	0	0	0	0	0	0	0	0	0	0	0	0	0	0
6	0	0	0	0	0	0	0	0	0	0	0	0	0	0	0	0	0	0
7	0	0	0	0	0	0	0	0	0	0	0	0	0	0	0	0	0	0
8	0	0	0	0	0	0	0	0	0	0	0	0	0	0	0	0	0	0
9	0	0	0	0	0	0	0	0	0	0	0	0	0	0	0	0	0	0
10	0	0	0	0	0	0	0	0	0	0	0	0	0	0	0	0	0	0
11	0	0	0	0	0	0	0	0	0	0	0	0	0	0	0	0	0	0
12	0	0	0	0	0	0	0	0	0	0	0	0	0	0	0	0	0	0
13	0	0	0	0	0	0	0	0	0	0	0	0	0	0	0	0	0	0
14	0	0	0	0	0	0	0	0	0	0	0	0	0	0	0	0	0	0
15	0	0	0	0	0	0	0	0	0	0	0	0	0	0	0	0	0	0
16	0	0	0	0	0	0	0	0	0	0	0	0	0	0	0	0	0	0
17	0	0	0	0	0	0	0	0	0	0	0	0	0	0	0	0	0	0
18	0	0	0	0	0	0	0	0	0	0	0	0	0	0	0	0	0	0
19	0	0	0	0	0	0	0	0	0	0	0	0	0	0	0	0	0	0
20	0	0	0	0	0	0	0	0	0	0	0	0	0	0	0	0	0	0
21	0	0	0	0	0	0	0	0	0	0	0	0	0	0	0	0	0	0
22	0	0	0	0	0	0	0	0	0	0	0	0	0	0	0	0	0	0
23	0	0	0	0	0	0	0	0	0	0	0	0	0	0	0	0	0	0
24	0	0	0	0	0	0	0	0	0	0	0	0	0	0	0	0	0	0
25	0	0	0	0	0	0	0	0	0	0	0	0	0	0	0	0	0	0
26	0	0	0	0	0	0	0	0	0	0	0	0	0	0	0	0	0	0
27	0	0	0	0	0	0	0	0	0	0	0	0	0	0	0	0	0	0
28	0	0	0	0	0	0	0	0	0	0	0	0	0	0	0	0	0	0

Natural Wind Gust

Member	FxiW	FyiW	FziW	MxiW	MyiW	MziW	Fxi	Fyi	Fzi	Mxi	Myi	Mzi	Fxj	Fyj	Fzj	Mxj	Myj	Mzj
1	0	0	430	-27,740	-178	0	0	0	430	-27,740	-178	0	0	0	411	-25,849	-178	0
2	0	0	411	-25,849	-178	0	0	0	411	-25,849	-178	0	0	0	392	-24,044	-178	0
3	0	0	392	-24,044	-178	0	0	0	392	-24,044	-178	0	0	0	374	-22,320	-178	0
4	0	0	374	-22,320	-178	0	0	0	374	-22,320	-178	0	0	0	357	-20,677	-178	0
5	0	0	357	-20,677	-178	0	0	0	357	-20,677	-178	0	0	0	340	-19,110	-178	0
6	0	0	340	-19,110	-178	0	0	0	340	-19,110	-178	0	0	0	323	-17,619	-178	0
7	0	0	323	-17,619	-178	0	0	0	323	-17,619	-178	0	0	0	313	-16,665	-178	0
8	0	0	313	-16,665	-178	0	0	0	313	-16,665	-178	0	0	0	298	-15,384	-178	0
9	0	0	298	-15,384	-178	0	0	0	298	-15,384	-178	0	0	0	283	-14,164	-178	0
10	0	0	283	-14,164	-178	0	0	0	283	-14,164	-178	0	0	0	269	-13,003	-178	0
11	0	0	269	-13,003	-178	0	0	0	269	-13,003	-178	0	0	0	256	-11,900	-178	0
12	0	0	256	-11,900	-178	0	0	0	256	-11,900	-178	0	0	0	243	-10,851	-178	0

13	0	0	243	-10,851	-178	0	0	0	243	-10,851	-178	0	0	0	236	-10,253	-178	0
14	0	0	236	-10,253	-178	0	0	0	236	-10,253	-178	0	0	0	223	-9,255	-178	0
15	0	0	223	-9,255	-178	0	0	0	223	-9,255	-178	0	0	0	210	-8,312	-178	0
16	0	0	210	-8,312	-178	0	0	0	210	-8,312	-178	0	0	0	198	-7,422	-178	0
17	0	0	198	-7,422	-178	0	0	0	198	-7,422	-178	0	0	0	187	-6,583	-178	0
18	0	0	187	-6,583	-178	0	0	0	187	-6,583	-178	0	0	0	176	-5,792	-178	0
19	0	0	176	-5,792	-178	0	0	0	176	-5,792	-178	0	0	0	166	-5,047	-178	0
20	0	0	166	-5,047	-178	0	0	0	166	-5,047	-178	0	0	0	156	-4,346	-178	0
21	0	0	156	-4,346	-178	0	0	0	156	-4,346	-178	0	0	0	152	-4,038	-178	0
22	0	0	152	-4,038	-178	0	0	0	152	-4,038	-178	0	0	0	141	-3,328	-178	0
23	0	0	141	-3,328	-178	0	0	0	141	-3,328	-178	0	0	0	131	-2,666	-178	0
24	0	0	131	-2,666	-178	0	0	0	131	-2,666	-178	0	0	0	122	-2,050	-178	0
25	0	0	122	-2,050	-178	0	0	0	122	-2,050	-178	0	0	0	114	-1,477	-178	0
26	0	0	114	-1,477	-178	0	0	0	114	-1,477	-178	0	0	0	106	-944	-178	0
27	0	0	106	-944	-178	0	0	0	106	-944	-178	0	0	0	97	-452	-178	0
28	0	0	97	-452	-178	0	0	0	97	-452	-178	0	0	0	89	0	-178	0

Truck-Induced Gust

Member	FxiW	FyiW	FziW	MxiW	MyiW	MziW	Fxi	Fyi	Fzi	Mxi	Myi	Mzi	Fxj	Fyj	Fzj	Mxj	Myj	Mzj
1	0	0	0	0	0	0	0	0	0	0	0	0	0	0	0	0	0	0
2	0	0	0	0	0	0	0	0	0	0	0	0	0	0	0	0	0	0
3	0	0	0	0	0	0	0	0	0	0	0	0	0	0	0	0	0	0
4	0	0	0	0	0	0	0	0	0	0	0	0	0	0	0	0	0	0
5	0	0	0	0	0	0	0	0	0	0	0	0	0	0	0	0	0	0
6	0	0	0	0	0	0	0	0	0	0	0	0	0	0	0	0	0	0
7	0	0	0	0	0	0	0	0	0	0	0	0	0	0	0	0	0	0
8	0	0	0	0	0	0	0	0	0	0	0	0	0	0	0	0	0	0
9	0	0	0	0	0	0	0	0	0	0	0	0	0	0	0	0	0	0
10	0	0	0	0	0	0	0	0	0	0	0	0	0	0	0	0	0	0
11	0	0	0	0	0	0	0	0	0	0	0	0	0	0	0	0	0	0
12	0	0	0	0	0	0	0	0	0	0	0	0	0	0	0	0	0	0
13	0	0	0	0	0	0	0	0	0	0	0	0	0	0	0	0	0	0
14	0	0	0	0	0	0	0	0	0	0	0	0	0	0	0	0	0	0
15	0	0	0	0	0	0	0	0	0	0	0	0	0	0	0	0	0	0
16	0	0	0	0	0	0	0	0	0	0	0	0	0	0	0	0	0	0
17	0	0	0	0	0	0	0	0	0	0	0	0	0	0	0	0	0	0
18	0	0	0	0	0	0	0	0	0	0	0	0	0	0	0	0	0	0
19	0	0	0	0	0	0	0	0	0	0	0	0	0	0	0	0	0	0
20	0	0	0	0	0	0	0	0	0	0	0	0	0	0	0	0	0	0
21	0	0	0	0	0	0	0	0	0	0	0	0	0	0	0	0	0	0
22	0	0	0	0	0	0	0	0	0	0	0	0	0	0	0	0	0	0
23	0	0	0	0	0	0	0	0	0	0	0	0	0	0	0	0	0	0
24	0	0	0	0	0	0	0	0	0	0	0	0	0	0	0	0	0	0
25	0	0	0	0	0	0	0	0	0	0	0	0	0	0	0	0	0	0
26	0	0	0	0	0	0	0	0	0	0	0	0	0	0	0	0	0	0
27	0	0	0	0	0	0	0	0	0	0	0	0	0	0	0	0	0	0
28	0	0	0	0	0	0	0	0	0	0	0	0	0	0	0	0	0	0

Pole - Member Stresses (psi)

Group I

Member	fai	fvi	fbi	Fai	Fvi	Fbi	CSRi	faj	fvj	fbj	Faj	Fvj	Fbj	CSRj
1	328	0	524	33,000	14,701	32,887	0.026	322	0	555	33,000	15,356	33,224	0.026
2	322	0	555	33,000	15,356	33,224	0.026	316	0	589	33,000	16,061	33,582	0.027
3	316	0	589	33,000	16,061	33,582	0.027	311	0	626	33,000	16,822	33,962	0.028
4	311	0	626	33,000	16,822	33,962	0.028	305	0	666	33,000	17,644	34,367	0.029
5	305	0	666	33,000	17,644	34,367	0.029	300	0	709	33,000	18,150	34,798	0.029

6	300	1	709	33,000	18,150	34,798	0.029	295	1	756	33,000	18,150	35,260	0.030
7	145	0	366	33,000	18,150	36,300	0.014	138	0	383	33,000	18,150	36,300	0.015
8	273	1	744	33,000	18,150	35,169	0.029	267	1	791	33,000	18,150	35,624	0.030
9	267	1	791	33,000	18,150	35,624	0.030	262	1	843	33,000	18,150	36,109	0.031
10	262	1	843	33,000	18,150	36,109	0.031	257	1	899	33,000	18,150	36,300	0.033
11	257	1	899	33,000	18,150	36,300	0.033	252	1	961	33,000	18,150	36,300	0.034
12	252	1	961	33,000	18,150	36,300	0.034	247	1	1,029	33,000	18,150	36,300	0.036
13	142	1	583	33,000	18,150	36,300	0.020	137	1	607	33,000	18,150	36,300	0.021
14	322	2	1,408	33,000	15,134	33,111	0.052	321	2	1,515	33,000	16,077	33,590	0.055
15	321	2	1,515	33,000	16,077	33,590	0.055	319	2	1,634	33,000	17,122	34,110	0.058
16	319	2	1,634	33,000	17,122	34,110	0.058	319	2	1,766	33,000	18,150	34,677	0.061
17	319	3	1,766	33,000	18,150	34,677	0.061	319	3	1,913	33,000	18,150	35,298	0.064
18	319	3	1,913	33,000	18,150	35,298	0.064	319	3	2,079	33,000	18,150	35,979	0.067
19	319	4	2,079	33,000	18,150	35,979	0.067	321	4	2,267	33,000	18,150	36,300	0.072
20	321	5	2,267	33,000	18,150	36,300	0.072	323	5	2,480	33,000	18,150	36,300	0.078
21	159	2	1,191	33,000	18,150	36,300	0.038	156	2	1,242	33,000	18,150	36,300	0.039
22	306	5	2,405	33,000	18,150	36,300	0.076	309	5	2,667	33,000	18,150	36,300	0.083
23	309	6	2,667	33,000	18,150	36,300	0.083	314	6	2,974	33,000	18,150	36,300	0.091
24	314	7	2,974	33,000	18,150	36,300	0.091	320	8	3,336	33,000	18,150	36,300	0.102
25	320	9	3,336	33,000	18,150	36,300	0.102	329	9	3,767	33,000	18,150	36,300	0.114
26	329	11	3,767	33,000	18,150	36,300	0.114	340	11	4,285	33,000	18,150	36,300	0.128
27	340	13	4,285	33,000	18,150	36,300	0.128	356	14	4,914	33,000	18,150	36,300	0.146
28	356	17	4,914	33,000	18,150	36,300	0.146	377	18	5,686	33,000	18,150	36,300	0.168
Group II														
Member	fai	fvi	fbi	Fai	Fvi	Fbi	CSRi	faj	fvj	fbj	Faj	Fvj	Fbj	CSRj
1	327	535	34,243	43,890	19,553	43,740	0.791	321	542	34,335	43,890	20,424	44,188	0.785
2	319	548	34,335	43,890	20,424	44,188	0.785	314	556	34,416	43,890	21,361	44,664	0.778
3	312	561	34,416	43,890	21,361	44,664	0.778	307	571	34,485	43,890	22,373	45,169	0.771
4	305	576	34,485	43,890	22,373	45,169	0.771	299	587	34,539	43,890	23,467	45,708	0.763
5	298	592	34,539	43,890	23,467	45,708	0.763	292	604	34,576	43,890	24,140	46,282	0.754
6	290	610	34,576	43,890	24,140	46,282	0.754	285	622	34,593	43,890	24,140	46,896	0.745
7	140	305	16,752	43,890	24,140	48,279	0.350	133	310	16,743	43,890	24,140	48,279	0.350
8	261	611	32,567	43,890	24,140	46,775	0.703	256	623	32,510	43,890	24,140	47,380	0.693
9	254	628	32,516	43,890	24,140	47,380	0.693	249	641	32,438	43,890	24,140	48,026	0.682
10	247	646	32,438	43,890	24,140	48,026	0.682	242	661	32,351	43,890	24,140	48,279	0.676
11	240	665	32,351	43,890	24,140	48,279	0.676	235	682	32,245	43,890	24,140	48,279	0.674
12	233	687	32,245	43,890	24,140	48,279	0.674	228	707	32,119	43,890	24,140	48,279	0.671
13	130	405	18,183	43,890	24,140	48,279	0.380	125	411	18,124	43,890	24,140	48,279	0.379
14	293	968	42,027	43,890	20,129	44,037	0.963	291	999	41,707	43,890	21,382	44,675	0.942
15	287	1,008	41,707	43,890	21,382	44,675	0.942	287	1,045	41,316	43,890	22,772	45,367	0.919
16	282	1,054	41,316	43,890	22,772	45,367	0.919	282	1,097	40,835	43,890	24,140	46,121	0.894
17	278	1,106	40,835	43,890	24,140	46,121	0.894	278	1,156	40,242	43,890	24,140	46,946	0.866
18	274	1,165	40,242	43,890	24,140	46,946	0.866	275	1,225	39,507	43,890	24,140	47,852	0.834
19	270	1,234	39,507	43,890	24,140	47,852	0.834	272	1,305	38,590	43,890	24,140	48,279	0.808
20	267	1,314	38,590	43,890	24,140	48,279	0.808	269	1,399	37,436	43,890	24,140	48,279	0.785
21	131	661	17,988	43,890	24,140	48,279	0.376	128	700	17,674	43,890	24,140	48,279	0.370
22	249	1,369	34,219	43,890	24,140	48,279	0.718	252	1,477	32,423	43,890	24,140	48,279	0.681
23	247	1,487	32,423	43,890	24,140	48,279	0.681	251	1,621	30,126	43,890	24,140	48,279	0.634
24	246	1,630	30,126	43,890	24,140	48,279	0.634	252	1,799	27,142	43,890	24,140	48,279	0.573
25	247	1,808	27,142	43,890	24,140	48,279	0.573	255	2,021	23,207	43,890	24,140	48,279	0.493
26	250	2,030	23,207	43,890	24,140	48,279	0.493	260	2,304	17,951	43,890	24,140	48,279	0.387
27	256	2,311	17,950	43,890	24,140	48,279	0.387	270	2,667	10,958	43,890	24,140	48,279	0.245
28	268	2,672	10,958	43,890	24,140	48,279	0.245	286	3,147	4,325	43,890	24,140	48,279	0.113
Group III														
Member	fai	fvi	fbi	Fai	Fvi	Fbi	CSRi	faj	fvj	fbj	Faj	Fvj	Fbj	CSRj

1	413	289	18,980	43,890	19,553	43,740	0.444	405	293	19,070	43,890	20,424	44,188	0.441
2	404	297	19,070	43,890	20,424	44,188	0.441	397	301	19,154	43,890	21,361	44,664	0.438
3	396	305	19,154	43,890	21,361	44,664	0.438	389	310	19,230	43,890	22,373	45,169	0.435
4	388	314	19,230	43,890	22,373	45,169	0.435	381	320	19,295	43,890	23,467	45,708	0.431
5	380	324	19,295	43,890	23,467	45,708	0.431	373	330	19,350	43,890	24,140	46,282	0.427
6	372	335	19,350	43,890	24,140	46,282	0.427	365	341	19,393	43,890	24,140	46,896	0.422
7	179	168	9,391	43,890	24,140	48,279	0.199	172	170	9,395	43,890	24,140	48,279	0.199
8	339	337	18,277	43,890	24,140	46,775	0.399	331	343	18,273	43,890	24,140	47,380	0.393
9	331	346	18,273	43,890	24,140	47,380	0.393	323	354	18,260	43,890	24,140	48,026	0.388
10	323	357	18,260	43,890	24,140	48,026	0.388	316	365	18,236	43,890	24,140	48,279	0.385
11	315	369	18,236	43,890	24,140	48,279	0.385	308	378	18,201	43,890	24,140	48,279	0.384
12	308	381	18,201	43,890	24,140	48,279	0.384	301	392	18,153	43,890	24,140	48,279	0.383
13	173	225	10,277	43,890	24,140	48,279	0.217	167	228	10,252	43,890	24,140	48,279	0.216
14	392	528	23,772	43,890	20,129	44,037	0.549	388	555	23,621	43,890	21,382	44,675	0.538
15	386	562	23,621	43,890	21,382	44,675	0.538	382	582	23,426	43,890	22,772	45,367	0.526
16	381	588	23,426	43,890	22,772	45,367	0.526	377	611	23,176	43,890	24,140	46,121	0.512
17	376	618	23,176	43,890	24,140	46,121	0.512	373	645	22,858	43,890	24,140	46,946	0.496
18	372	652	22,858	43,890	24,140	46,946	0.496	369	684	22,456	43,890	24,140	47,852	0.479
19	368	691	22,456	43,890	24,140	47,852	0.478	367	729	21,947	43,890	24,140	48,279	0.464
20	365	736	21,947	43,890	24,140	48,279	0.464	365	782	21,302	43,890	24,140	48,279	0.451
21	178	381	10,236	43,890	24,140	48,279	0.216	175	391	10,060	43,890	24,140	48,279	0.213
22	343	766	19,478	43,890	24,140	48,279	0.412	342	825	18,477	43,890	24,140	48,279	0.392
23	341	832	18,477	43,890	24,140	48,279	0.392	342	904	17,206	43,890	24,140	48,279	0.366
24	340	911	17,206	43,890	24,140	48,279	0.366	343	1,002	15,576	43,890	24,140	48,279	0.332
25	341	1,008	15,576	43,890	24,140	48,279	0.332	346	1,124	13,472	43,890	24,140	48,279	0.289
26	345	1,130	13,472	43,890	24,140	48,279	0.289	352	1,278	10,779	43,890	24,140	48,279	0.234
27	351	1,283	10,779	43,890	24,140	48,279	0.234	363	1,476	7,584	43,890	24,140	48,279	0.169
28	362	1,479	7,584	43,890	24,140	48,279	0.169	379	1,736	5,715	43,890	24,140	48,279	0.132

Galloping							Natural Wind Gust						Truck-Induced Gust					
Member	fbi	Fbi	Ratio i	fbj	Fbj	Ratio j	fbi	Fbi	Ratio i	fbj	Fbj	Ratio j	fbi	Fbi	Ratio i	fbj	Fbj	Ratio j
1	0	12,000	0.000	0	12,000	0.000	3,586	12,000	0.299	3,544	12,000	0.295	0	12,000	0.000	0	12,000	0.000
2	0	12,000	0.000	0	12,000	0.000	3,544	12,000	0.295	3,502	12,000	0.292	0	12,000	0.000	0	12,000	0.000
3	0	12,000	0.000	0	12,000	0.000	3,502	12,000	0.292	3,460	12,000	0.288	0	12,000	0.000	0	12,000	0.000
4	0	12,000	0.000	0	12,000	0.000	3,460	12,000	0.288	3,419	12,000	0.285	0	12,000	0.000	0	12,000	0.000
5	0	12,000	0.000	0	12,000	0.000	3,419	12,000	0.285	3,378	12,000	0.281	0	12,000	0.000	0	12,000	0.000
6	0	12,000	0.000	0	12,000	0.000	3,378	12,000	0.281	3,336	12,000	0.278	0	12,000	0.000	0	12,000	0.000
7	0	12,000	0.000	0	12,000	0.000	1,616	12,000	0.135	1,601	12,000	0.133	0	12,000	0.000	0	12,000	0.000
8	0	12,000	0.000	0	12,000	0.000	3,114	12,000	0.259	3,071	12,000	0.256	0	12,000	0.000	0	12,000	0.000
9	0	12,000	0.000	0	12,000	0.000	3,071	12,000	0.256	3,027	12,000	0.252	0	12,000	0.000	0	12,000	0.000
10	0	12,000	0.000	0	12,000	0.000	3,027	12,000	0.252	2,983	12,000	0.249	0	12,000	0.000	0	12,000	0.000
11	0	12,000	0.000	0	12,000	0.000	2,983	12,000	0.249	2,938	12,000	0.245	0	12,000	0.000	0	12,000	0.000
12	0	12,000	0.000	0	12,000	0.000	2,938	12,000	0.245	2,891	12,000	0.241	0	12,000	0.000	0	12,000	0.000
13	0	12,000	0.000	0	12,000	0.000	1,637	12,000	0.136	1,619	12,000	0.135	0	12,000	0.000	0	12,000	0.000
14	0	12,000	0.000	0	12,000	0.000	3,755	12,000	0.313	3,677	12,000	0.306	0	12,000	0.000	0	12,000	0.000
15	0	12,000	0.000	0	12,000	0.000	3,677	12,000	0.306	3,596	12,000	0.300	0	12,000	0.000	0	12,000	0.000
16	0	12,000	0.000	0	12,000	0.000	3,596	12,000	0.300	3,509	12,000	0.292	0	12,000	0.000	0	12,000	0.000
17	0	12,000	0.000	0	12,000	0.000	3,509	12,000	0.292	3,415	12,000	0.285	0	12,000	0.000	0	12,000	0.000
18	0	12,000	0.000	0	12,000	0.000	3,415	12,000	0.285	3,312	12,000	0.276	0	12,000	0.000	0	12,000	0.000
19	0	12,000	0.000	0	12,000	0.000	3,312	12,000	0.276	3,197	12,000	0.266	0	12,000	0.000	0	12,000	0.000
20	0	12,000	0.000	0	12,000	0.000	3,197	12,000	0.266	3,067	12,000	0.256	0	12,000	0.000	0	12,000	0.000
21	0	12,000	0.000	0	12,000	0.000	1,474	12,000	0.123	1,440	12,000	0.120	0	12,000	0.000	0	12,000	0.000
22	0	12,000	0.000	0	12,000	0.000	2,788	12,000	0.232	2,607	12,000	0.217	0	12,000	0.000	0	12,000	0.000
23	0	12,000	0.000	0	12,000	0.000	2,607	12,000	0.217	2,390	12,000	0.199	0	12,000	0.000	0	12,000	0.000
24	0	12,000	0.000	0	12,000	0.000	2,390	12,000	0.199	2,123	12,000	0.177	0	12,000	0.000	0	12,000	0.000
25	0	12,000	0.000	0	12,000	0.000	2,123	12,000	0.177	1,787	12,000	0.149	0	12,000	0.000	0	12,000	0.000

26	0	12,000	0.000	0	12,000	0.000	1,787	12,000	0.149	1,353	12,000	0.113	0	12,000	0.000	0	12,000	0.000
27	0	12,000	0.000	0	12,000	0.000	1,353	12,000	0.113	778	12,000	0.065	0	12,000	0.000	0	12,000	0.000
28	0	12,000	0.000	0	12,000	0.000	778	12,000	0.065	0	12,000	0.000	0	12,000	0.000	0	12,000	0.000

Pole Base - Connection Stresses (psi) - Strength Design

	Group I	Group II	Group III
Bolt Stress			
Applied Tensile	360	23,563	13,055
Applied Shear	0	267	145
Allowable Tensile	27,500	36,575	36,575
Allowable Shear	16,500	21,945	21,945
Bolt Ratio	0.013	0.644	0.357
Base Plate Stress			
Applied Bending	131	8,563	4,746
Allowable Bending	27,000	35,910	35,910
Ratio	0.005	0.238	0.132

Pole Base - Connection Stresses (psi) - Fatigue Design

	Galloping	Natural Wind	Truck Gust
Ex. 3 - Detail 5 (Connection Bolts)			
Bolt SR	0	2,467	0
Bolt CAFL	7,000	7,000	7,000
Ratio	0.000	0.352	0.000
Ex. 5 - Detail 11 (Full Weld Backup - Full Pen.)			
Tube SR	0	3,586	0
Tube CAFL	4,500	4,500	4,500
Ratio	0.000	0.797	0.000

UNION METAL CORPORATION
1432 Maple Avenue NE, Canton, Ohio 44705
Phone:330-456-7653 Fax: 330-456-0196
Mast Arm and Pole Design Program - Version 2.0.2 - July 15, 2007
Engineer: Robert McCann
Phone: 330-458-5257
Fax: 330-458-5276
Email: mccann@unionmetal.com
Computer File: P:\Eng\PE\NC\39608-3\45-TRIPLE FIXTURE.dat
9/9/2011 9:47:45 AM

UMC Reference No. 39608-3
Structure Description: ROUND TAPERED STEEL LIGHTING STRUCTURE
Project Description: RALEIGH, NC
Design Code: 2001 AASHTO SPECIFICATION
Basic Wind Speed: 110 mph
Wind Pressure Method: 2001 AASHTO
Gust Effect Factor: 1.14
Allowable Stress Increase for Wind: 1.33
Ice Loading: 3.0 psf

Structure Design Life: 50 yrs
Wind Importance Factor: 1.00
Wind Exposure: Alpha: 9.5 Zg: 900 ft Zmin: 16.4 ft

Structure Identification: 45' LIGHTING POLE W/ TB1-17 T-BASE

Pole - Structure Data
Number of Tubes. 1
Total Pole Length: 43.58 ft
Tube 1: 0.120 in wall x 9.70 in OD x3.60 in OD x 43.58 ft length
Pole Base Connection Type: Base Plate with Connection Bolts
Anchor Bolt Specification: ASTM-A325
Anchor Bolt Diameter: 1.00 in
Number of Bolts: 4
Base Plate Shape: Polygon
Anchor Bolt Orientation: X-axis aligned with bolts
Base Plate Type: Socket - Fillet
Plate Specification: ASTM-A572 GR 50
Base Plate Thickness: 1.00 in
Bolt Circle: 13 in
Plate Width: 13 in
Outside Fillet Weld Size: 0.188 in
Inside Fillet Weld Size: 0.125 in
Weld Line Offset: 0.5 in
Weld Electrode: ER70S-X
Pole Signal Loads (lbs)(ft)

No.	Height	Orientation	Weight	Front Area	Side Area	Ice Area	Horz. Cd	H. Offset
1	43.58	90	200	9	9	18	1.0	2

Pole - Member Geometry (ft) - Section Properties (in)

Member	Yi	Yj	Length	WindHt	Wall	ODi	ODj	AveOD	Si	Sj	Ai	Aj	Ri	Rj	Taper	Shape	Material
1	0.00	4.84	4.84	3.84	0.120	9.70	9.02	9.36	8.65	7.47	3.61	3.35	4.79	4.45	0.14	Round	ASTM A572 GR 50
2	4.84	9.68	4.84	8.68	0.120	9.02	8.34	8.68	7.47	6.37	3.35	3.10	4.45	4.11	0.14	Round	ASTM A572 GR 50
3	9.68	14.53	4.84	13.53	0.120	8.34	7.67	8.01	6.37	5.36	3.10	2.84	4.11	3.77	0.14	Round	ASTM A572 GR 50

4	14.53	19.37	4.84	18.37	0.120	7.67	6.99	7.33	5.36	4.44	2.84	2.59	3.77	3.43	0.14	Round	ASTM A572 GR 50
5	19.37	24.21	4.84	23.21	0.120	6.99	6.31	6.65	4.44	3.61	2.59	2.33	3.43	3.10	0.14	Round	ASTM A572 GR 50
6	24.21	29.05	4.84	28.05	0.120	6.31	5.63	5.97	3.61	2.86	2.33	2.08	3.10	2.76	0.14	Round	ASTM A572 GR 50
7	29.05	33.90	4.84	32.89	0.120	5.63	4.95	5.29	2.86	2.20	2.08	1.82	2.76	2.42	0.14	Round	ASTM A572 GR 50
8	33.90	38.74	4.84	37.74	0.120	4.95	4.28	4.62	2.20	1.63	1.82	1.57	2.42	2.08	0.14	Round	ASTM A572 GR 50
9	38.74	43.58	4.84	42.58	0.120	4.28	3.60	3.94	1.63	1.14	1.57	1.31	2.08	1.74	0.14	Round	ASTM A572 GR 50

Pole - Member Forces (ft & lbs)

Group I

Member	FxiW	FyiW	FziW	MxiW	MyiW	MziW	Fxi	Fyi	Fzi	Mxi	Myi	Mzi	Fxj	Fyj	Fzj	Mxj	Myj	Mzj
1	0	565	0	0	0	452	0	565	0	0	0	452	0	507	0	0	0	451
2	0	507	0	0	0	451	0	507	0	0	0	451	0	454	0	0	0	450
3	0	454	0	0	0	450	1	454	0	0	0	450	1	405	0	0	0	447
4	0	405	0	0	0	447	1	405	0	0	0	447	1	361	0	0	0	443
5	0	361	0	0	0	443	1	361	0	0	0	443	1	320	0	0	0	439
6	0	320	0	0	0	439	1	320	0	0	0	439	1	284	0	0	0	432
7	0	284	0	0	0	432	2	284	0	0	0	432	2	252	0	0	0	424
8	0	252	0	0	0	424	2	252	0	0	0	424	2	224	0	0	0	414
9	0	224	0	0	0	414	3	224	0	0	0	414	3	200	0	0	0	400

Group II

Member	FxiW	FyiW	FziW	MxiW	MyiW	MziW	Fxi	Fyi	Fzi	Mxi	Myi	Mzi	Fxj	Fyj	Fzj	Mxj	Myj	Mzj
1	0	555	846	-27,857	-753	441	0	555	853	-27,857	-753	432	0	498	800	-23,857	-753	431
2	0	507	794	-23,857	-753	440	0	478	812	-23,858	-753	413	0	427	762	-20,048	-753	411
3	0	454	746	-20,048	-750	439	0	407	773	-20,048	-753	391	0	361	722	-16,430	-753	389
4	0	405	698	-16,430	-746	436	1	341	732	-16,431	-753	367	1	301	678	-13,020	-753	365
5	0	361	648	-13,019	-740	433	1	261	686	-13,021	-753	342	1	247	627	-9,842	-753	339
6	0	320	594	-9,840	-733	429	1	228	635	-9,843	-753	315	1	201	571	-6,926	-753	311
7	0	284	535	-6,923	-723	424	1	184	577	-6,927	-753	288	1	163	510	-4,299	-753	284
8	0	252	472	-4,295	-711	417	1	149	514	-4,300	-753	262	1	136	443	-1,989	-753	258
9	0	224	405	-1,984	-697	409	1	127	445	-1,991	-752	243	1	119	376	-7	-752	237

Group III

Member	FxiW	FyiW	FziW	MxiW	MyiW	MziW	Fxi	Fyi	Fzi	Mxi	Myi	Mzi	Fxj	Fyj	Fzj	Mxj	Myj	Mzj
1	0	846	474	-15,785	-403	596	0	843	480	-15,785	-403	593	0	750	450	-13,536	-403	592
2	0	753	445	-13,536	-402	595	1	744	460	-13,536	-403	587	1	659	431	-11,380	-403	584
3	0	667	417	-11,380	-400	592	1	652	441	-11,380	-402	577	1	574	410	-9,321	-402	573
4	0	588	390	-9,320	-397	587	1	567	419	-9,321	-402	566	1	496	386	-7,372	-402	559
5	0	515	361	-7,371	-392	580	2	490	395	-7,372	-402	552	2	426	358	-5,551	-402	544
6	0	449	328	-5,550	-386	571	2	420	365	-5,552	-402	536	2	364	325	-3,882	-402	526
7	0	390	293	-3,880	-378	560	3	359	331	-3,883	-402	519	2	311	288	-2,386	-402	506
8	0	338	255	-2,383	-367	546	3	306	292	-2,387	-402	500	3	266	245	-1,088	-402	484
9	0	293	213	-1,084	-355	529	4	263	248	-1,090	-401	480	4	230	201	-6	-401	461

Pole - Member Stresses (psi)

Group I

Member	fai	fvi	fbi	Fai	Fvi	Fbi	CSRi	faj	fvj	fbj	Faj	Fvj	Fbj	CSRj
1	156	0	627	30,000	16,500	31,951	0.025	151	0	726	30,000	16,500	32,887	0.027
2	151	0	726	30,000	16,500	32,887	0.027	147	0	847	30,000	16,500	33,000	0.031
3	147	0	847	30,000	16,500	33,000	0.031	143	0	1,000	30,000	16,500	33,000	0.035
4	143	1	1,000	30,000	16,500	33,000	0.035	139	1	1,198	30,000	16,500	33,000	0.041
5	139	1	1,198	30,000	16,500	33,000	0.041	137	1	1,458	30,000	16,500	33,000	0.049
6	137	1	1,458	30,000	16,500	33,000	0.049	137	1	1,812	30,000	16,500	33,000	0.059
7	137	2	1,812	30,000	16,500	33,000	0.059	138	2	2,311	30,000	16,500	33,000	0.075
8	138	2	2,311	30,000	16,500	33,000	0.075	143	3	3,050	30,000	16,500	33,000	0.097
9	143	4	3,050	30,000	16,500	33,000	0.097	153	4	4,210	30,000	16,500	33,000	0.133

Group II

Member	fai	fvi	fbi	Fai	Fvi	Fbi	CSRi	faj	fvj	fbj	Faj	Fvj	Fbj	CSRj
1	154	995	38,671	39,900	21,945	42,495	0.916	148	1,082	38,356	39,900	21,945	43,739	0.883
2	143	1,090	38,356	39,900	21,945	43,739	0.883	138	1,201	37,767	39,900	21,945	43,890	0.867
3	131	1,208	37,767	39,900	21,945	43,890	0.867	127	1,350	36,765	39,900	21,945	43,890	0.845
4	120	1,357	36,765	39,900	21,945	43,890	0.844	116	1,541	35,173	39,900	21,945	43,890	0.809
5	109	1,547	35,173	39,900	21,945	43,890	0.809	106	1,789	32,737	39,900	21,945	43,890	0.755
6	98	1,795	32,737	39,900	21,945	43,890	0.755	97	2,128	29,064	39,900	21,945	43,890	0.674
7	88	2,133	29,064	39,900	21,945	43,890	0.674	90	2,611	23,481	39,900	21,945	43,890	0.551
8	82	2,615	23,481	39,900	21,945	43,890	0.551	87	3,339	14,784	39,900	21,945	43,890	0.362
9	81	3,342	14,785	39,900	21,945	43,890	0.362	91	4,534	2,499	39,900	21,945	43,890	0.102

Group III

Member	fai	fvi	fbi	Fai	Fvi	Fbi	CSRi	faj	fvj	fbj	Faj	Fvj	Fbj	CSRj
1	234	545	21,926	39,900	21,945	42,495	0.522	224	592	21,780	39,900	21,945	43,739	0.504
2	222	598	21,780	39,900	21,945	43,739	0.504	213	657	21,461	39,900	21,945	43,890	0.495
3	210	663	21,461	39,900	21,945	43,890	0.495	202	739	20,890	39,900	21,945	43,890	0.482
4	199	745	20,890	39,900	21,945	43,890	0.482	192	842	19,963	39,900	21,945	43,890	0.461
5	189	848	19,963	39,900	21,945	43,890	0.461	183	976	18,542	39,900	21,945	43,890	0.429
6	180	982	18,542	39,900	21,945	43,890	0.429	175	1,156	16,422	39,900	21,945	43,890	0.381
7	173	1,162	16,422	39,900	21,945	43,890	0.381	171	1,412	13,293	39,900	21,945	43,890	0.311
8	168	1,416	13,293	39,900	21,945	43,890	0.311	170	1,794	8,781	39,900	21,945	43,890	0.211
9	168	1,797	8,782	39,900	21,945	43,890	0.211	176	2,419	4,852	39,900	21,945	43,890	0.127

Pole Base - Connection Stresses (psi) - Strength Design

	Group I	Group II	Group III
Bolt Stress			
Applied Tensile	531	32,740	18,552
Applied Shear	0	712	388
Allowable Tensile	38,000	50,540	50,540
Allowable Shear	19,000	25,270	25,270
Bolt Ratio	0.014	0.648	0.367
Base Plate Stress			
Applied Bending	476	29,316	16,622
Allowable Bending	37,500	49,875	49,875
Ratio	0.013	0.588	0.333
Fillet Weld Stress			
Applied Outside Socket	359	13,662	7,876
Applied Inside Socket	325	20,027	11,355
Allowable Stress	21,000	27,930	27,930
Outside Socket Ratio	0.017	0.489	0.282
Inside Socket Ratio	0.015	0.717	0.407

Union Metal Corporation
Base Plate Design
Revision 6/2003

9/9/11 10:25 AM

Structure: 45' LIGHTING POLE W/ TB1-17 T-BASE
Project: RALEIGH, NC
Design Code: 110 MPH - 2001 AASHTO
Engineer: ROBERT MCCANN

TUBE DATA

Outside Diameter	9.70 in
Wall Thickness	0.120 in
Applied Moment	24.86 k-ft
Applied Shear	0.85 kips
Applied Torsion	0.75 k-ft

BOLT DATA

Diameter	1.25 in
Bolt Circle Diameter	15.00 in
Number of Bolts	4
Specification	ASTM-F1554 GR55

Hole Diameter	1.500 in
Effective Area	0.969 in^2
Length	42x6=48 in
Bolt C to C Spacing	10.607 in
Projection	5.25 in
Allowable Tensile Stress	36.58 ksi
Allowable Shear Stress	21.95 ksi
Applied Tensile Stress	20.52 ksi
Applied Shear Stress	0.53 ksi
Applied Axial Force	19.89 kips

Combined Stress Ratio	0.56 CSR

Use a 17 in. high Transformer Base

QTY	UMC DESIGN NUMBER	OH	EPA & WEIGHT (MAX)	TUBE A	JT1 NOM	JT1 MIN	TUBE B	JT2 NOM	JT2 MIN	TUBE C	JT3 NOM	JT3 MIN	TUBE D	POLE BASE CONNECTION DATA B.C.	S	F	P	T	A.BOLT (QTY) & SIZE
	72118-B246-Y1	120'	12.18 EPA 771 LBS	3E-21.00x16.80x30'-0"	25.83	33	7E-17.58x12.82x34'-0"	19.76	27	7E-13.53x9.05x32'-0"	14	21	7E-9.69x5.39x30'-9"	26	30 1/2	9 15/16	8 3/4	2 1/2	(8) 2 x 60
	72118-B246-Y2	120'	17.01 EPA 1347 LBS	3E-22.00x17.80x30'-0"	27.39	36	3E-18.76x15.05x26'-6"	23.16	30	7E-15.80x10.90x35'-0"	16.83	24	7E-11.58x6.54x36'-0"	27	31	10 5/16	8 3/4	2 1/2	(8) 2 x 60

7 GA = 0.179" WALL THICKNESS
3 GA = 0.250" WALL THICKNESS
E = ROUND TAPERED STEEL TUBE @ 0.14 in/ft TAPER

DESIGN CRITERIA

1. DESIGNED IN ACCORDANCE WITH THE 2001 AASHTO "STANDARD SPECIFICATIONS FOR STRUCTURAL SUPPORTS FOR HIGHWAY SIGNS, LUMINAIRES AND TRAFFIC SIGNALS" FOR 110 M.P.H. WIND ZONE. THE DESIGN PARAMETERS INCLUDE:
   50 YEAR STRUCTURE DESIGN LIFE
   FATIGUE CATEGORY I CONSIDERATION FOR.
   NATURAL WIND GUST
2. ANCHOR BOLTS ANALYZED FOR STEEL STRENGTH ONLY. THE ANCHOR BOLT EMBEDMENT LENGTH SHOWN ON THIS DRAWING SHALL BE VERIFIED BY THE FOUNDATION ENGINEER.
3. WELDING IN ACCORDANCE WITH AWS D1.1 STRUCTURAL WELDING CODE CURRENT EDITION. ALL WELDS TO BE VISUALLY INSPECTED. ALL FULL PENETRATION SEAM WELDS TO BE 100% RADIOGRAPHICALY INSPECTED, 25% OF ALL PARTIAL PENETRATION SEAM WELDS TO BE MAGNETIC PARTICAL TESTED. INSPECT RANDOM 25% OF ALL BASE TO TUBE WELDS USING ULTRASONIC TESTING. PROVIDE WRITTEN REPORTS FOR ALL WELD INSPECTIONS. CWI TO BE PRESENT ON ALL SHIFTS WHEN WELDING IS BEING DONE.
4. THE EXPOSED LENGTH OF THE ANCHOR BOLT BETWEEN THE TOP OF THE FOUNDATION AND THE BOTTOM OF THE LEVELING NUT SHOULD NOT EXCEED ONE BOLT DIAMETER
5. PER AASHTO THE MINIMUM LENGTH OF ANY TELESCOPIC FIELD JOINT SHALL BE 1.5 TIMES THE INSIDE DIAMETER OF THE END OF THE FEMALE SECTION
6. LONGITUDINAL SEAM WELDS: 100% PENETRATION FOR MINIMUM JOINT LENGTH PLUS 6" (FEMALE TUBES ONLY) & FOR 6" NEXT TO A FULL PENETRATION CIRCUMFERENTIAL WELD SEAM. ALL OTHER SEAM WELDS ARE 60%.
7. CUSTOMER TO CONFIRM ALL DIMENSIONS & ORIENTATIONS BEFORE RELEASING ORDER FOR MANUFACTURING.

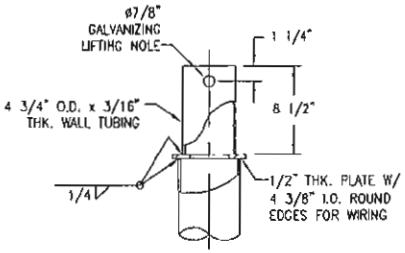

TOP TENON DETAIL

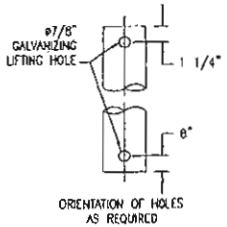

LIFTING HOLE REQUIREMENTS
BOTTOM SECTION: TOP HOLE ONLY
MIDDLE SECTION: BOTH
TOP SECTION: BOTTOM HOLE ONLY

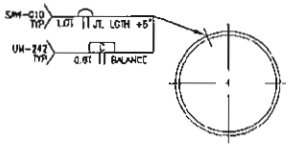

WELD SEAM FOR ROUND SHAFT
(SEE NOTE 6)
(ANGULAR ORIENTATION MAY VARY FROM THAT SHOWN)

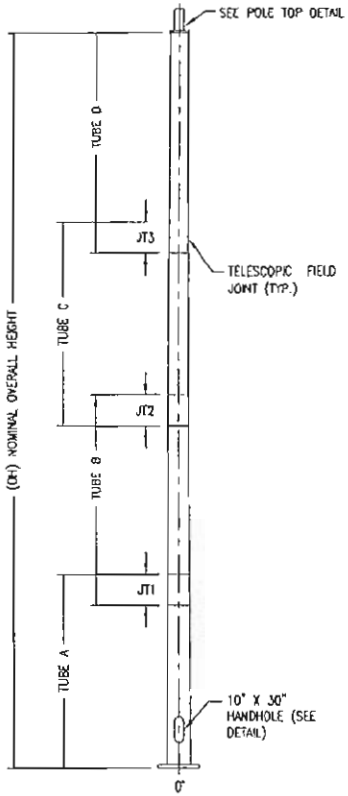

MATERIAL SPECIFICATIONS	
ROUND TAPERED TUBE	ASTM A595 GR A
PLATE	ASTM A36
HANDHOLE FRAME	ASTM A529 GR 50 (PREFERRED) or ASTM A572 GR 50 or ASTM A709 GR 50
HANDHOLE COVER	ASTM A1011 OR A36
ANCHOR BOLTS	ASTM F1554 GR 55
ANCHOR BOLT NUTS	ASTM A563 GR A
FLAT WASHERS	ASTM F436
S.S. HARDWARE	AISI-300 SERIES (18-8)
STRUCTURE FINISH	PER SALES ORDER
HARDWARE FINISH	H.D. GALV TO ASTM A153

STATE: NC | REQ# / SO# : ONC-39608-3
PROJECT NAME: WESTERN WAKE TURNPIKE

REV	DESCRIPTION	DATE	REV BY	CHK BY
	REVISIONS			

ROUND TAPERED STEEL HIGH MAST LIGHTING STRUCTURE
FOR RALEIGH, NC (HOLOPHANE LOWERING DEVICE)

Union Metal Corporation

This document and the contents herein are proprietary and the property of Union Metal Corporation. This document is not to be, copied, reproduced, or used for any reason except for the purposes which it was issued without the express written consent of Union Metal Corporation. Furthermore Union Metal Corporation reserves the right to recall this document and all copies at any time for any reason.

DESIGNED BY	CHECKED BY	DATE	SCALE	ENG REF
EGB	JAD	9/13/11	NTS	72118-B245
72118-B246			REVISION R0	SHEET 1 of 2

Mentioned of this Drawing is confidential and should not be copied or reproduced. These using this document for reference only. Please use all precautions available to ensure that this document or when the cannot reverse engineered in digital format, within has a single source and protected by data encryption.

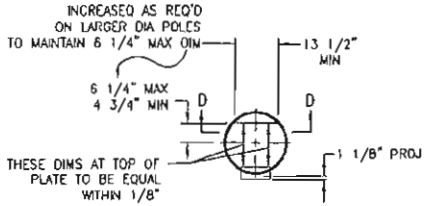

SECTION C-C

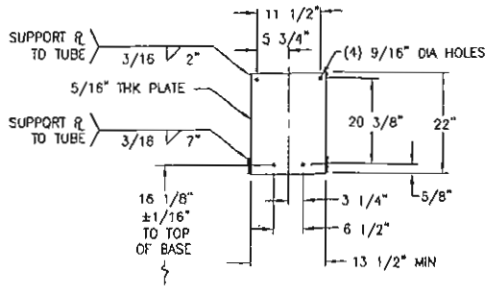

SECTION D-D
SUPPORT PLATE DETAIL

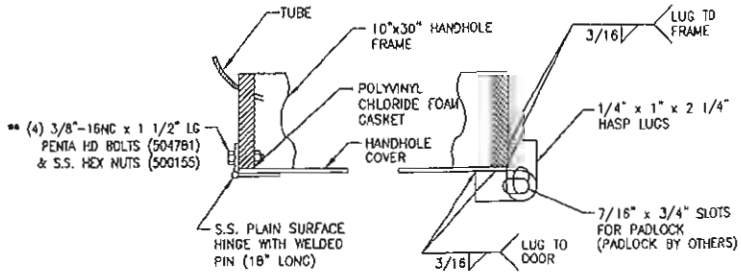

SECTION X-X

** REQUIRES 1/2" DRIVE SOCKET (504529)

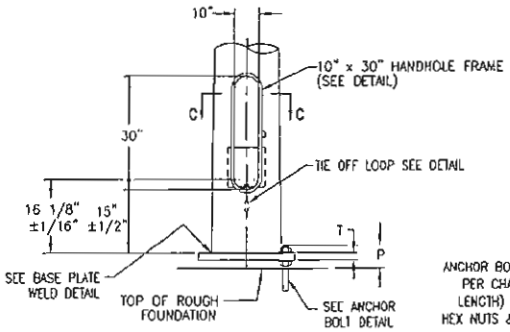

BASE CONNECTION DETAIL

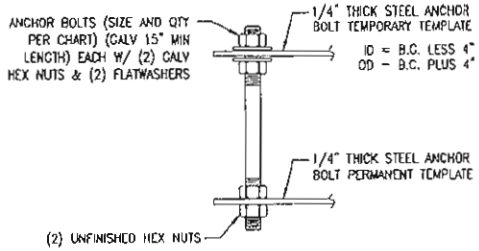

ANCHOR BOLT DETAIL
(SHIPPED UNASSEMBLED)

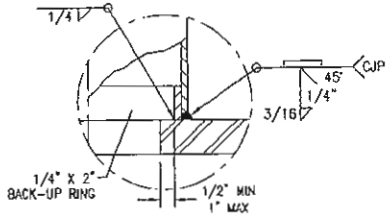

POLE BASE WELD DETAIL

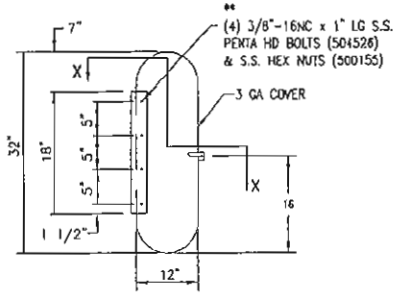

HANDHOLE COVER DETAIL
(MUST BE SHIPPED ASSEMBLED)
(TUBE AND FRAME NOT SHOWN)

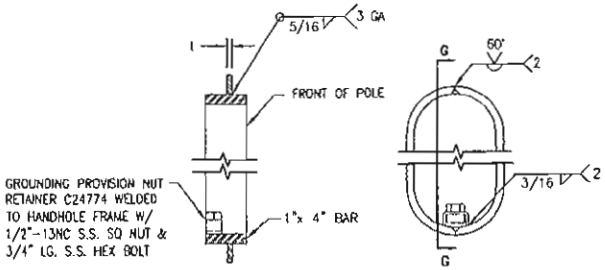

SECTION G-G

FRONT VIEW

10"x30" HANDHOLE FRAME DETAIL

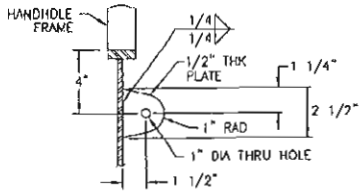

TIE OFF LOOP DETAIL
@ 0° CENTERLINE

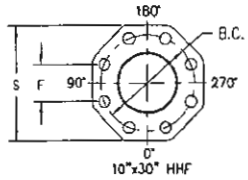

BASE PLATE DETAIL

STATE: NC	REQ# / SO# : ONC-39608-3	REV	DESCRIPTION	DATE	BY	CHK BY
PROJECT NAME: WESTERN WAKE TURNPIKE			REVISIONS			

ROUND TAPERED STEEL HIGH MAST LIGHTING STRUCTURE
FOR RALEIGH, NC (HOLOPHANE LOWERING DEVICE)

Union Metal Corporation

This document and the contents hereon are proprietary and the property of Union Metal Corporation. This document is not to be, copied, reproduced, or used for any reason except for the purposes which it was issued without the express written consent of Union Metal Corporation. Furthermore Union Metal Corporation reserves the right to recall this document and all copies at any time for any reason.

DESIGNED BY	CHECKED BY	DATE	SCALE	ENG REF
EGB	SKB	9/13/11	NTS	72118-B245
72118-B246			REVISION R0	SHEET 2 of 2

QTY	UMC DESIGN NUMBER	OH	POLE TUBE SIZE	POLE BASE PLATE CONNECTION DATA					FOUNDATION / ANCHOR BOLT DATA				ARM TYPE
				B.C.	S	F	T	BOLT#	B.C.	F	P	A.BOLT SIZE	
	1408-B161-Y1	45'-0"	0.120-9.70x3.60x43'-7"-K	13	13	9 3/16	1	1	15	10 5/8	3	1 1/4 x 42 x 6	SINGLE
	1408-B161-Y2	45'-0"	0.120-9.70x3.60x43'-7"-K	13	13	9 3/16	1	1	15	10 5/8	3	1 1/4 x 42 x 6	DOUBLE
	1408-B161-Y3	45'-0"	0.120-9.70x3.60x43'-7"-K	13	13	9 3/16	1	1	15	10 5/8	3	1 1/4 x 42 x 6	TRIPLE

0.120 = 0.120" WALL THICKNESS
K = COLLY TUBE

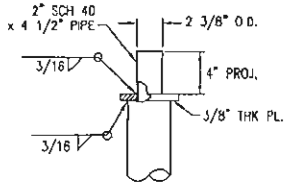

SINGLE LIGHTING ARM TOP TENON DETAIL
(Y1 ONLY)

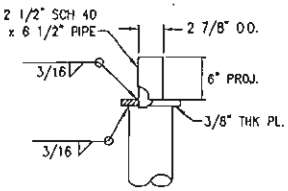

POLE TOP TENON DETAIL
(Y2 & Y3 ONLY)

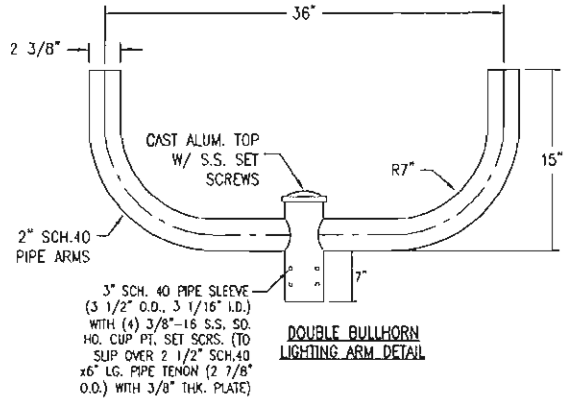

DOUBLE BULLHORN LIGHTING ARM DETAIL

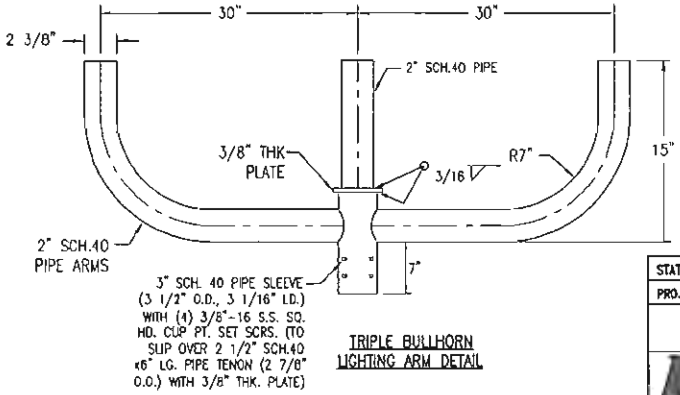

TRIPLE BULLHORN LIGHTING ARM DETAIL

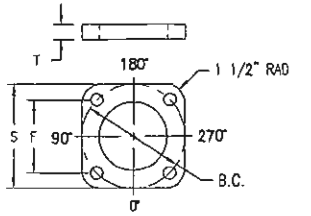

POLE BASE PLATE DETAIL

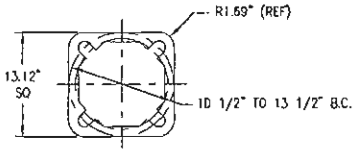

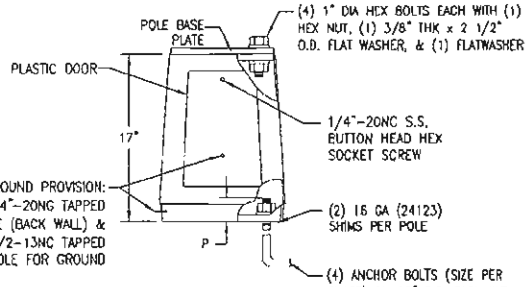

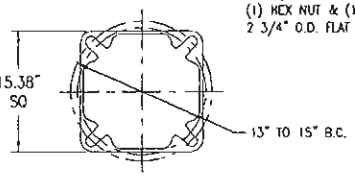

CAST ALUMINUM BREAKAWAY TRANSFORMER BASE DETAIL
(181-17)

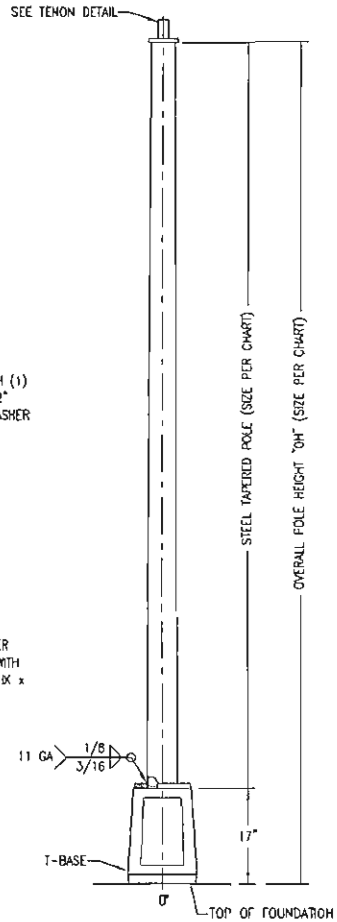

DESIGN CRITERIA:

1. DESIGNED IN ACCORDANCE WITH 2001 AASHTO "STANDARD SPECIFICATIONS FOR STRUCTURAL SUPPORTS FOR HIGHWAY SIGNS, LUMINAIRES, AND TRAFFIC SIGNALS" FOR 110 M.P.H. WIND ZONE.
2. ANCHOR BOLTS ANALYZED FOR STEEL STRENGTH ONLY. THE ANCHOR BOLT EMBEDMENT LENGTH SHOWN ON THIS DRAWING SHALL BE VERIFIED BY THE FOUNDATION ENGINEER.
3. THE EXPOSED LENGTH OF THE ANCHOR BOLT BETWEEN THE TOP OF THE FOUNDATION AND THE BOTTOM OF THE LEVELING NUT SHOULD NOT EXCEED ONE BOLT DIAMETER.
4. CUSTOMER TO CONFIRM ALL DIMENSIONS & ORIENTATIONS BEFORE RELEASING ORDER FOR MANUFACTURING.

MATERIAL SPECIFICATIONS	
TAPERED TUBE	ASTM A572 GR 65
PLATE	ASTM A572 GR 50
ANCHOR BOLTS	ASTM F1554 GR 55
ANCHOR BOLT NUTS	ASTM A563 GR A
CONNECTION BOLTS	ASTM A325
CONNECTION NUTS	ASTM A563 GR DH
FLAT WASHERS	ASTM F436
PIPE	ASTM A501 or A53 GR B
S.S. HARDWARE	AISI-300 SERIES (18-8)
STRUCTURE FINISH	PER SALES ORDER
HARDWARE FINISH	HD GALV TO ASTM A153

REV	DESCRIPTION	DATE	REV BY	CHK BY
R1	REPLACED HORIZONTAL SINGLE LIGHTING ARM DETAIL WITH VERTICAL SINGLE LIGHTING TENON STYLE DETAIL	9/26/11	EGB	SAD

REVISIONS

STATE: NC | REQ# / SO# : ONC-39608-3
PROJECT NAME: WESTERN WAKE TURNPIKE

STEEL BULLHORN LIGHTING POLE
FOR RALEIGH, NORTH CAROLINA

Union Metal Corporation

This document and the contents herein are proprietary and the property of Union Metal Corporation. This document is not to be, copied, reproduced, or used for any reason except for the purposes which it was issued without the express written consent of Union Metal Corporation. Furthermore Union Metal Corporation reserves the right to recall this document and all copies at any time for any reason.

DESIGNED BY	CHECKED BY	DATE	SCALE	ENG REF
EGB	SAD	9/14/11	NTS	1408-B154
1408-B161			REVISION R1	SHEET 1 OF 1

TYPE 05 LOWERING DEVICE

TOP LATCHING, CENTERING SYSTEM WITH INTERNAL WINCH

DEVICE SERIES	NUMBER OF CIRCUITS	QUANTITY OF FIXTURES	FIXTURE SERIES	WATTAGE & SOURCE OF FIXTURES
05	■ **1** CIRCUIT	☐ **02** TWO (2)	☐ **HC** HMSC	☐ **4H** 400W HPS
	☐ **2** CIRCUITS	☐ **03** THREE (3)	☐ **HD** HMSD	☐ **4M** 400W MH
		■ **04** FOUR (4)	☐ **HA** HMSP ASYMMETRIC	☐ **4R** 400W HPS MAGREG
		☐ **05** FIVE (5)	■ **HM** HMAO	☐ **7H** 750W HPS
		☐ **06** SIX (6)	☐ **HT** HMST	☐ **7M** 750W MH
		☐ **07** SEVEN (7)	☐ **MY** MA, MV, MC	■ **1H** 1000W HPS
		☐ **08** EIGHT (8)	☐ **PB** PB2	☐ **1M** 1000W MH
		☐ **09** NINE (9)	☐ **PF** PF	☐ **5M** 1500W MH
		☐ **10** TEN (10)		☐ **6M** 1650W MH
		☐ **12** TWELVE (12)		

FREQUENCY, VOLTAGE & PHASING	POLE HEIGHT	CABLE TYPE
☐ **A** 120V SINGLE PHASE	☐ **050** 50 FEET	☐ **A** GALVANIZED – 1/4" WINCH
☐ **B** 120/208V 3 PHASE–4 WIRE	☐ **060** 60 FEET	☐ **B** GALVANIZED – 5/16" WINCH
☐ **C** 208V SINGLE PHASE	☐ **070** 70 FEET	■ **C** STAINLESS STEEL – 1/4" WINCH
☐ **D** 208V 3 PHASE	☐ **080** 80 FEET	☐ **D** STAINLESS STEEL – 5/16" WINCH
☐ **E** 240V SINGLE PHASE LL	☐ **090** 90 FEET	
☐ **F** 240V SINGLE PHASE LN	☐ **100** 100 FEET	
☐ **G** 277V SINGLE PHASE	☐ **110** 110 FEET	
☐ **H** 277/480V 3 PHASE–4 WIRE	■ **120** 120 FEET	
☐ **J** 347/600V 3 PHASE–4 WIRE	☐ **130** 130 FEET	
■ **K** 480V SINGLE PHASE	☐ **140** 140 FEET	
☐ **L** 480V 3 PHASE	☐ **150** 150 FEET	
	☐ **15M** 15 METERS	
	☐ **20M** 20 METERS	
	☐ **25M** 25 METERS	
	☐ **30M** 30 METERS	
	☐ **35M** 35 METERS	
	☐ **40M** 40 METERS	
	☐ **45M** 45 METERS	

OPTIONS		ACCESSORIES
☐ **1**	LIGHTNING ARRESTOR – CB ENCLOSURE	■ **LDM–W–X–Y–Z** PORTABLE DRIVE MOTOR
☐ **2**	LIGHTNING ARRESTOR – RING J–BOX	SEE SHEET 5 FOR LETTER DESIGNATIONS
☐ **R**	PHOTOCONTROL RECEPTACLE – RING J–BOX	
☐ **FAA1**	SINGLE WARNING LIGHT	■ **09249** LEVELING BLOCK ASSEMBLY
☐ **FAA2**	DOUBLE WARNING LIGHT	
☐ **FAA2TR**	DOUBLE WITH TRANSFER RELAY	
☐ **FWC**	FIXED WIREWAY COVER ON RING	
☐ **LR**	LIGHTNING ROD	

CATALOG NUMBER

05104HM1HK120C–NCDOT, 09249

HOLOPHANE®
LEADER IN LIGHTING SOLUTIONS
An AcuityBrands Company

ORDER NO: _____

TYPE: LD–4

DRAWING NO. TSG006516
CAD MODEL: LD05.DWG
DATE: 9/8/11
Sheet 1 of 9

©2002 ACUITY LIGHTING GROUP INC., 214 OAKWOOD AVE., NEWARK, OH 43055

TYPE 05 LOWERING DEVICE

TOP LATCHING, CENTERING SYSTEM WITH INTERNAL WINCH

DEVICE SERIES	NUMBER OF CIRCUITS	QUANTITY OF FIXTURES	FIXTURE SERIES	WATTAGE & SOURCE OF FIXTURES
05	■ **1** CIRCUIT	☐ **02** TWO (2)	☐ **HC** HMSC	☐ **4H** 400W HPS
	☐ **2** CIRCUITS	☐ **03** THREE (3)	☐ **HD** HMSD	☐ **4M** 400W MH
		☐ **04** FOUR (4)	☐ **HA** HMSP ASYMMETRIC	☐ **4R** 400W HPS MAGREG
		☐ **05** FIVE (5)	■ **HM** HMAO	☐ **7H** 750W HPS
		■ **06** SIX (6)	☐ **HT** HMST	☐ **7M** 750W MH
		☐ **07** SEVEN (7)	☐ **MY** MA, MV, MC	■ **1H** 1000W HPS
		☐ **08** EIGHT (8)	☐ **PB** PB2	☐ **1M** 1000W MH
		☐ **09** NINE (9)	☐ **PF** PF	☐ **5M** 1500W MH
		☐ **10** TEN (10)		☐ **6M** 1650W MH
		☐ **12** TWELVE (12)		

FREQUENCY, VOLTAGE & PHASING	POLE HEIGHT	CABLE TYPE
☐ **A** 120V SINGLE PHASE	☐ **050** 50 FEET	☐ **A** GALVANIZED – 1/4" WINCH
☐ **B** 120/208V 3 PHASE–4 WIRE	☐ **060** 60 FEET	☐ **B** GALVANIZED – 5/16" WINCH
☐ **C** 208V SINGLE PHASE	☐ **070** 70 FEET	■ **C** STAINLESS STEEL – 1/4" WINCH
☐ **D** 208V 3 PHASE	☐ **080** 80 FEET	☐ **D** STAINLESS STEEL – 5/16" WINCH
☐ **E** 240V SINGLE PHASE LL	☐ **090** 90 FEET	
☐ **F** 240V SINGLE PHASE LN	☐ **100** 100 FEET	
☐ **G** 277V SINGLE PHASE	☐ **110** 110 FEET	
☐ **H** 277/480V 3 PHASE–4 WIRE	■ **120** 120 FEET	
☐ **J** 347/600V 3 PHASE–4 WIRE	☐ **130** 130 FEET	
■ **K** 480V SINGLE PHASE	☐ **140** 140 FEET	
☐ **L** 480V 3 PHASE	☐ **150** 150 FEET	
	☐ **15M** 15 METERS	
	☐ **20M** 20 METERS	
	☐ **25M** 25 METERS	
	☐ **30M** 30 METERS	
	☐ **35M** 35 METERS	
	☐ **40M** 40 METERS	
	☐ **45M** 45 METERS	

OPTIONS		ACCESSORIES
☐ **1**	LIGHTNING ARRESTOR – CB ENCLOSURE	■ **LDM–W–X–Y–Z** PORTABLE DRIVE MOTOR
☐ **2**	LIGHTNING ARRESTOR – RING J–BOX	SEE SHEET 5 FOR LETTER DESIGNATIONS
☐ **R**	PHOTOCONTROL RECEPTACLE – RING J–BOX	
☐ **FAA1**	SINGLE WARNING LIGHT	■ **09249** LEVELING BLOCK ASSEMBLY
☐ **FAA2**	DOUBLE WARNING LIGHT	
☐ **FAA2TR**	DOUBLE WITH TRANSFER RELAY	
☐ **FWC**	FIXED WIREWAY COVER ON RING	
☐ **LR**	LIGHTNING ROD	

CATALOG NUMBER

05106HM1HK120C–NCDOT, 09249

HOLOPHANE®
LEADER IN LIGHTING SOLUTIONS
An AcuityBrands Company

ORDER NO: _____

TYPE: LD–6

DRAWING NO. TSG006516
CAD MODEL: LD05.DWG
DATE: 9/8/11
Sheet 2 of 9

©2002 ACUITY LIGHTING GROUP INC., 214 OAKWOOD AVE., NEWARK, OH 43055

TYPE 05 LOWERING DEVICE

TOP LATCHING, CENTERING SYSTEM WITH INTERNAL WINCH

DEVICE SERIES

05

NUMBER OF CIRCUITS

- [x] **1** CIRCUIT
- [ ] **2** CIRCUITS

QUANTITY OF FIXTURES

- [ ] **02** TWO (2)
- [ ] **03** THREE (3)
- [ ] **04** FOUR (4)
- [ ] **05** FIVE (5)
- [ ] **06** SIX (6)
- [ ] **07** SEVEN (7)
- [x] **08** EIGHT (8)
- [ ] **09** NINE (9)
- [ ] **10** TEN (10)
- [ ] **12** TWELVE (12)

FIXTURE SERIES

- [ ] **HC** HMSC
- [ ] **HD** HMSD
- [ ] **HA** HMSP ASYMMETRIC
- [x] **HM** HMAO
- [ ] **HT** HMST
- [ ] **MY** MA, MV, MC
- [ ] **PB** PB2
- [ ] **PF** PF

WATTAGE & SOURCE OF FIXTURES

- [ ] **4H** 400W HPS
- [ ] **4M** 400W MH
- [ ] **4R** 400W HPS MAGREG
- [ ] **7H** 750W HPS
- [ ] **7M** 750W MH
- [x] **1H** 1000W HPS
- [ ] **1M** 1000W MH
- [ ] **5M** 1500W MH
- [ ] **6M** 1650W MH

FREQUENCY, VOLTAGE & PHASING

- [ ] **A** 120V SINGLE PHASE
- [ ] **B** 120/208V 3 PHASE-4 WIRE
- [ ] **C** 208V SINGLE PHASE
- [ ] **D** 208V 3 PHASE
- [ ] **E** 240V SINGLE PHASE LL
- [ ] **F** 240V SINGLE PHASE LN
- [ ] **G** 277V SINGLE PHASE
- [ ] **H** 277/480V 3 PHASE-4 WIRE
- [ ] **J** 347/600V 3 PHASE-4 WIRE
- [x] **K** 480V SINGLE PHASE
- [ ] **L** 480V 3 PHASE

POLE HEIGHT

- [ ] **050** 50 FEET
- [ ] **060** 60 FEET
- [ ] **070** 70 FEET
- [ ] **080** 80 FEET
- [ ] **090** 90 FEET
- [ ] **100** 100 FEET
- [ ] **110** 110 FEET
- [x] **120** 120 FEET
- [ ] **130** 130 FEET
- [ ] **140** 140 FEET
- [ ] **150** 150 FEET
- [ ] **15M** 15 METERS
- [ ] **20M** 20 METERS
- [ ] **25M** 25 METERS
- [ ] **30M** 30 METERS
- [ ] **35M** 35 METERS
- [ ] **40M** 40 METERS
- [ ] **45M** 45 METERS

CABLE TYPE

- [ ] **A** GALVANIZED – 1/4" WINCH
- [ ] **B** GALVANIZED – 5/16" WINCH
- [x] **C** STAINLESS STEEL – 1/4" WINCH
- [ ] **D** STAINLESS STEEL – 5/16" WINCH

OPTIONS

- [ ] **1** LIGHTNING ARRESTOR – CB ENCLOSURE
- [ ] **2** LIGHTNING ARRESTOR – RING J-BOX
- [ ] **R** PHOTOCONTROL RECEPTACLE – RING J-BOX
- [ ] **FAA1** SINGLE WARNING LIGHT
- [ ] **FAA2** DOUBLE WARNING LIGHT
- [ ] **FAA2TR** DOUBLE WITH TRANSFER RELAY
- [ ] **FWC** FIXED WIREWAY COVER ON RING
- [ ] **LR** LIGHTNING ROD

ACCESSORIES

- [x] **LDM-W-X-Y-Z** PORTABLE DRIVE MOTOR

SEE SHEET 5 FOR LETTER DESIGNATIONS

- [x] **09249** LEVELING BLOCK ASSEMBLY

CATALOG NUMBER

05108HM1HK120C-NCDOT, 09249

HOLOPHANE®
LEADER IN LIGHTING SOLUTIONS
An AcuityBrands Company

ORDER NO: _____

TYPE: LD-8

DRAWING NO. TSG006516
CAD MODEL: LD05.DWG
DATE: 9/8/11

©2002 ACUITY LIGHTING GROUP INC., 214 OAKWOOD AVE., NEWARK, OH 43055

TYPE 05 LOWERING DEVICE

TOP LATCHING, CENTERING SYSTEM WITH INTERNAL WINCH

DEVICE SERIES	NUMBER OF CIRCUITS	QUANTITY OF FIXTURES	FIXTURE SERIES	WATTAGE & SOURCE OF FIXTURES
05	■ **1** CIRCUIT	☐ **02** TWO (2)	☐ **HC** HMSC	☐ **4H** 400W HPS
	☐ **2** CIRCUITS	☐ **03** THREE (3)	☐ **HD** HMSD	☐ **4M** 400W MH
		☐ **04** FOUR (4)	☐ **HA** HMSP ASYMMETRIC	☐ **4R** 400W HPS MAGREG
		☐ **05** FIVE (5)	■ **HM** HMAO	☐ **7H** 750W HPS
		☐ **06** SIX (6)	☐ **HT** HMST	☐ **7M** 750W MH
		☐ **07** SEVEN (7)	☐ **MY** MA, MV, MC	■ **1H** 1000W HPS
		☐ **08** EIGHT (8)	☐ **PB** PB2	☐ **1M** 1000W MH
		☐ **09** NINE (9)	☐ **PF** PF	☐ **5M** 1500W MH
		☐ **10** TEN (10)		☐ **6M** 1650W MH
		■ **12** TWELVE (12)		

FREQUENCY, VOLTAGE & PHASING	POLE HEIGHT	CABLE TYPE
☐ **A** 120V SINGLE PHASE	☐ **050** 50 FEET	☐ **A** GALVANIZED – 1/4" WINCH
☐ **B** 120/208V 3 PHASE–4 WIRE	☐ **060** 60 FEET	☐ **B** GALVANIZED – 5/16" WINCH
☐ **C** 208V SINGLE PHASE	☐ **070** 70 FEET	■ **C** STAINLESS STEEL – 1/4" WINCH
☐ **D** 208V 3 PHASE	☐ **080** 80 FEET	☐ **D** STAINLESS STEEL – 5/16" WINCH
☐ **E** 240V SINGLE PHASE LL	☐ **090** 90 FEET	
☐ **F** 240V SINGLE PHASE LN	☐ **100** 100 FEET	
☐ **G** 277V SINGLE PHASE	☐ **110** 110 FEET	
☐ **H** 277/480V 3 PHASE–4 WIRE	■ **120** 120 FEET	
☐ **J** 347/600V 3 PHASE–4 WIRE	☐ **130** 130 FEET	
■ **K** 480V SINGLE PHASE	☐ **140** 140 FEET	
☐ **L** 480V 3 PHASE	☐ **150** 150 FEET	
	☐ **15M** 15 METERS	
	☐ **20M** 20 METERS	
	☐ **25M** 25 METERS	
	☐ **30M** 30 METERS	
	☐ **35M** 35 METERS	
	☐ **40M** 40 METERS	
	☐ **45M** 45 METERS	

OPTIONS		ACCESSORIES
☐ **1**	LIGHTNING ARRESTOR – CB ENCLOSURE	■ **LDM–W–X–Y–Z** PORTABLE DRIVE MOTOR
☐ **2**	LIGHTNING ARRESTOR – RING J–BOX	SEE SHEET 5 FOR LETTER DESIGNATIONS
☐ **R**	PHOTOCONTROL RECEPTACLE – RING J–BOX	
☐ **FAA1**	SINGLE WARNING LIGHT	■ **09249** LEVELING BLOCK ASSEMBLY
☐ **FAA2**	DOUBLE WARNING LIGHT	
☐ **FAA2TR**	DOUBLE WITH TRANSFER RELAY	
☐ **FWC**	FIXED WIREWAY COVER ON RING	
☐ **LR**	LIGHTNING ROD	

CATALOG NUMBER

05112HM1HK120C–NCDOT, 09249

HOLOPHANE®
LEADER IN LIGHTING SOLUTIONS
An AcuityBrands Company

ORDER NO: _____

TYPE: LD–12

DRAWING NO. TSG006516
CAD MODEL: LD05.DWG
DATE: 9/8/11
Sheet 4 of 9

©2002 ACUITY LIGHTING GROUP INC., 214 OAKWOOD AVE., NEWARK, OH 43055

TYPE 05 HEADFRAME AND RING ASSEMBLY

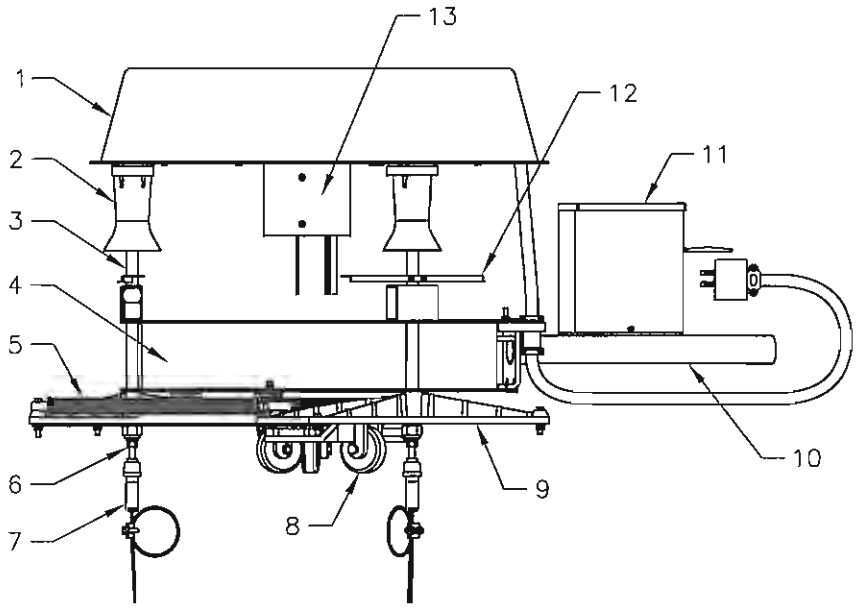

EPA = 5.62 SQUARE FEET
WEIGHT = 250 POUNDS
DIAMETER OF ASSEMBLY WITH LUMINAIRES VARIES FROM 8 TO 11 FEET

1. SPUN COPPER FREE ALUMINUM COVER
2. CAST HIGH STRENGTH COPPER FREE ALUMINUM LATCH BARREL
3. STAINLESS STEEL LATCH PIN
4. GALVANIZED STEEL LUMINAIRE RING
5. STAINLESS STEEL CENTERING SPRING
6. STAINLESS STEEL ADJUSTMENT NUT
7. STRANVISE WIRE ROPE GRIP
8. NON MARKING GUIDE ARM ROLLER
9. CAST ALUMINUM IRIS GUIDE ARM
10. GALVANIZED LUMINAIRE MOUNTING ARMS
11. NEMA 3R JUNCTION BOX
12. REFLECTING LATCH INDICATOR
13. GALVANIZED HEADFRAME, SLIPFITS A 4.63 TO 4.75 O.D. POLE TOP OR TENON

SCALE 1/16

HOLOPHANE®
LEADER IN LIGHTING SOLUTIONS
An AcuityBrands Company

ORDER NO: _____
TYPE: ALL

DRAWING NO. TSG006516
CAD MODEL: LD05.DWG
DATE: 9/8/11
Sheet 5 of 9

©2002 ACUITY LIGHTING GROUP INC., 214 OAKWOOD AVE., NEWARK, OH 43055

TYPE 05 HEADFRAME AND RING ASSEMBLY

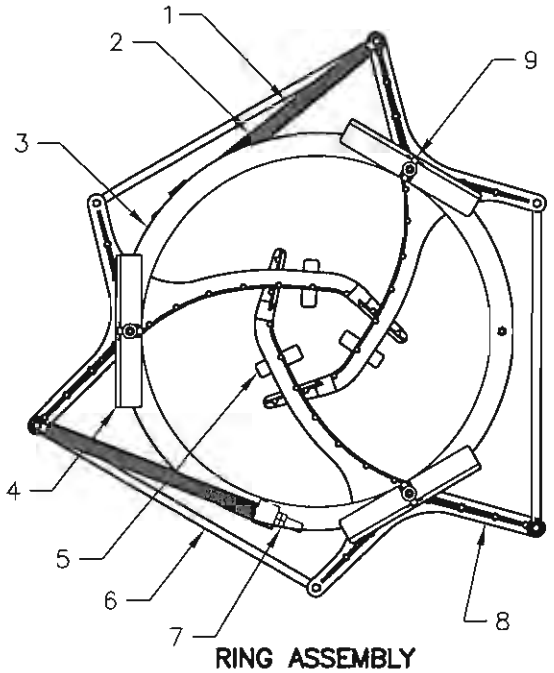

RING ASSEMBLY

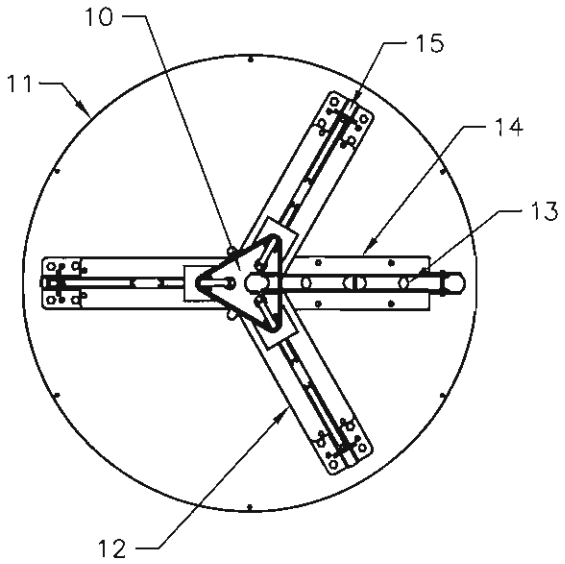

HEADFRAME ASSEMBLY

1. STAINLESS STEEL CENTERING COMPRESSION SPRING
2. SOLID ALUMINUM GUIDE ROD
3. GALVANIZED STEEL LUMINAIRE RING
4. REFLECTING LATCH INDICATOR
5. NON MARKING GUIDE ARM ROLLER
6. ALUMINUM GUIDE ARM CONNECTING BRACKET
7. GUIDE ARM ADJUSTMENT NUT
8. CAST ALUMINUM IRIS GUIDE ARM
9. STAINLESS STEEL LATCH PIN
10. STEEL CABLE / CORD SEPARATOR WELDED IN SLIPFITTER
11. STEEL HEADFRAME PLATE
12. STEEL HOIST CABLE BRACKET
13. ACETAL RESIN CORD ROLLERS
14. STEEL POWER CORD ROLLER BRACKET
15. STEEL HOIST CABLE SHEAVE

SCALE 1/16

HOLOPHANE®
LEADER IN LIGHTING SOLUTIONS
An AcuityBrands Company

ORDER NO: _____

TYPE: ALL

DRAWING NO. TSG006516
CAD MODEL: LD05.DWG
DATE: 9/8/11

©2002 ACUITY LIGHTING GROUP INC., 214 OAKWOOD AVE., NEWARK, OH 43055

TYPE 05 WINCH PLATE ASSEMBLY

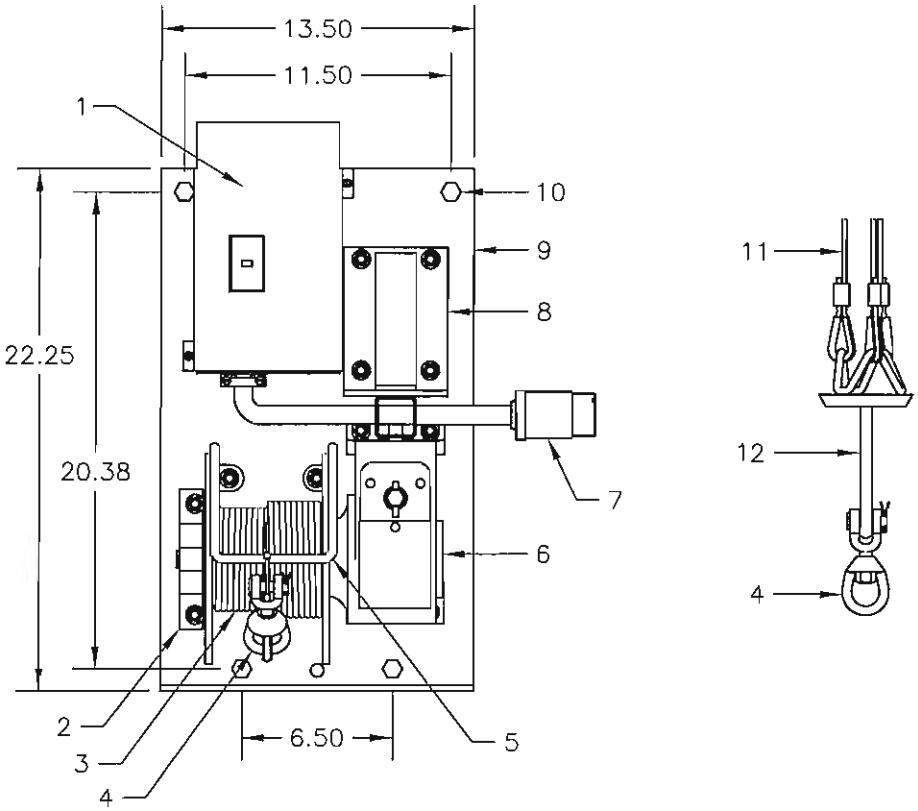

1. CIRCUIT BREAKER OR BREAKERS AND ENCLOSURE
2. WINCH OUTBOARD SUPPORT
3. 1/4" DIAMETER WINCH CABLE, STAINLESS STEEL
   LENGTH EQUALS POLE HEIGHT PLUS 6 FEET
4. FORGED STEEL SWIVEL, 11,000 POUND ULTIMATE STRENGTH
5. WINCH CABLE GUARD
6. WINCH, 30:1 GEAR RATIO WITH INTERNAL DRAG BRAKE
7. POWER SUPPLY CORD AND CONNECTOR
8. STEEL POWER UNIT MOUNTING BRACKET
9. STEEL WINCH PLATE
10. 1/2–13 MOUNTING BOLT
11. 3/16" DIAMETER HOIST CABLES, STAINLESS STEEL
12. STEEL CLEVIS TRANSITION ASSEMBLY

SCALE 1/16

HOLOPHANE®
LEADER IN LIGHTING SOLUTIONS
An AcuityBrands Company

ORDER NO: _____

TYPE: ALL

DRAWING NO. TSG006516
CAD MODEL: LD05.DWG
DATE: 9/8/11

©2002 ACUITY LIGHTING GROUP INC., 214 OAKWOOD AVE., NEWARK, OH 43055

TYPE 05 PORTABLE DRIVE MOTOR
LDM–W–X–Y–Z

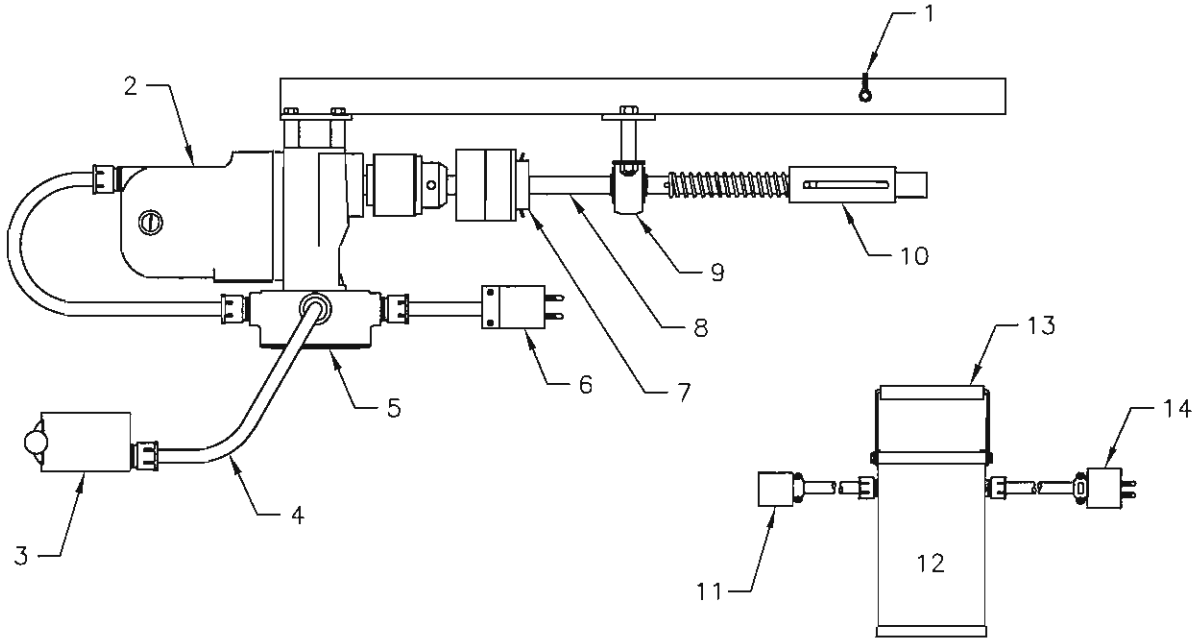

1. HITCH PIN
2. 3/4" REVERSIBLE ELECTRIC MOTOR, 120 VOLTS, 11.5 AMP, 350 RPM
3. REVERSING DRUM SWITCH
4. CONTROL CORD, 20 FOOT LENGTH
5. WIRING HOUSING
6. PLUG TO MATE TO CONNECTOR IN POLE BASE OR TRANSFORMER SECONDARY
7. TORQUE LIMITER COUPLING
8. 3/4" STEEL SHAFT
9. BALLBEARING PILLOWBLOCK
10. 5/8" HEX SOCKET CRANK SHAFT COUPLING
11. CONNECTOR TO MOTOR FROM 120V TRANSFORMER SECONDARY
12. STEPDOWN TRANSFORMER, 120V SECONDARY, 1.5 KVA FOR 240V, 277V AND 480V, 2.0 KVA FOR 208V
13. 1/2" CARRY HANDLE
14. PLUG TO CONNECTOR IN POLE BASE FROM TRANSFORMER PRIMARY

TYPICAL CATALOG NUMBER IS LDM–W–X–Y–Z WHERE:

W = NUMBER OF CIRCUITS (1 OR 2)
X = PHASE (1 FOR SINGLE PHASE, 3 FOR 3 PHASE OR 4 FOR 3 PHASE/4 WIRE)
Y = VOLTAGE (120, 208, 240, 277, 480 OR 600)
Z = AMPS 30, [SPEC. W/ GFIC DUPLEX RECPT. & SPEC. PLUG]

CATALOG NUMBER **LDM–1–1–480NCDOT**

HOLOPHANE®
LEADER IN LIGHTING SOLUTIONS
An AcuityBrands Company

ORDER NO: _____
TYPE: ALL

DRAWING NO. TSG006516
CAD MODEL: LD05.DWG
DATE: 9/8/11
Sheet 8 of 9

©2002 ACUITY LIGHTING GROUP INC., 214 OAKWOOD AVE., NEWARK, OH 43055

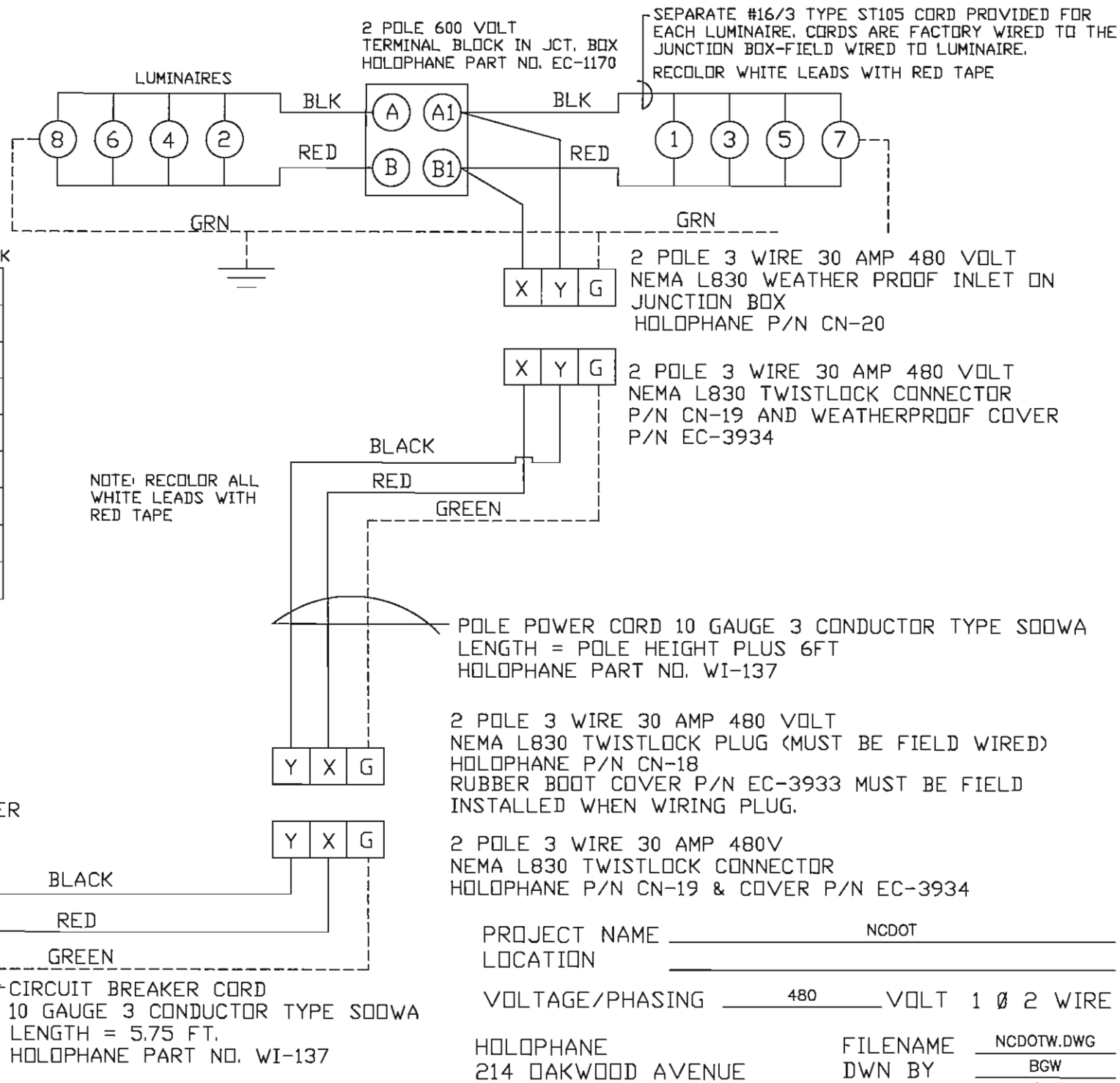

LUMINAIRE CONNECTIONS TO TERMINAL BLOCK

	BLACK	WHITE	GREEN
1	A1	B1	GRN
2	A	B	GRN
3	A1	B1	GRN
4	A	B	GRN
5	A1	B1	GRN
6	A	B	GRN
7	A1	B1	GRN
8	A	B	GRN

PROJECT NAME NCDOT
LOCATION

VOLTAGE/PHASING 480 VOLT 1 Ø 2 WIRE

HOLOPHANE
214 OAKWOOD AVENUE
NEWARK, OHIO 43055
740-345-9631

FILENAME NCDOTW.DWG
DWN BY BGW
DATE 9/8/11

Project TIP No. / Signal Inventory No. Project Number

Bid Line Number	Group Name	Construction Item No And Description	Manufacturer Product No Assigned By DOT	Manufacturer Name	Manufacturer Model Number or Other Designation	Approved Construction Application
0	PUL	PBCOMHDCSS-2006 Pull Box, Composite w/ Heavy Duty Cover Standard Size	ARMPBCOMHDCSS	Armorcast Products, Inc.	A6001425TA	1716

NCDOT or NCTA logo as required.

NORTH CAROLINA
Turnpike Authority

This submittal has been reviewed and found to be:

X Accepted

____ Accepted as Noted

____ Returned for Corrections

DLJ Initials

09/24/10 Date

Project TIP No. / Signal Inventory No. Project Number

Bid Line Number	Group Name	Construction Item No And Description	Manufacturer Product No Assigned By DOT	Manufacturer Name	Manufacturer Model Number or Other Designation	Approved Construction Application
	PUL	PBCOMHDCOS-2006 Pull Box, Composite w/ Heavy Duty Cover Over Size	ARMPBCOMHDCOS	Armorcast Products, Inc.	A6001640TAPCX24	1716

NCDOT or NCTA logo as required.

NORTH CAROLINA
Turnpike Authority

This submittal has been reviewed and found to be:

X Accepted

____ Accepted as Noted

____ Returned for Corrections

DLJ Initials

09/24/10 Date

TRAFFIC
CONTROL
DEVICES, INC.
P.O.BOX 150418
ALTAMONTE SPRINGS, FLORIDA 32715-0418
(407) 869-5300

Construction Material Submittal

Submittal Item: Armorcast A6001974TAP-VA, 24" x 36" x 24" Junction Box

Reason for Submittal: Currently no "Special Oversized" Junction Box is listed on the NCDOT QPL.

These will be used in locations that require "Special Oversized" Junction Boxes. The logo on the box will be marked with the NCTA or NCDOT logo as required in the project special provisions. Also included is a certification letter that shows the box meets "tier 15" loading requirements as specified in the project special provisions.

NORTH CAROLINA
Turnpike Authority

This submittal has been reviewed and found to be:

_____Accepted

_X__Accepted as Noted

_____Returned for Corrections

_____DLJ_____Initials

_____09/24/10_____Date

1

ARMORCAST®

Virginia Department of Transportation

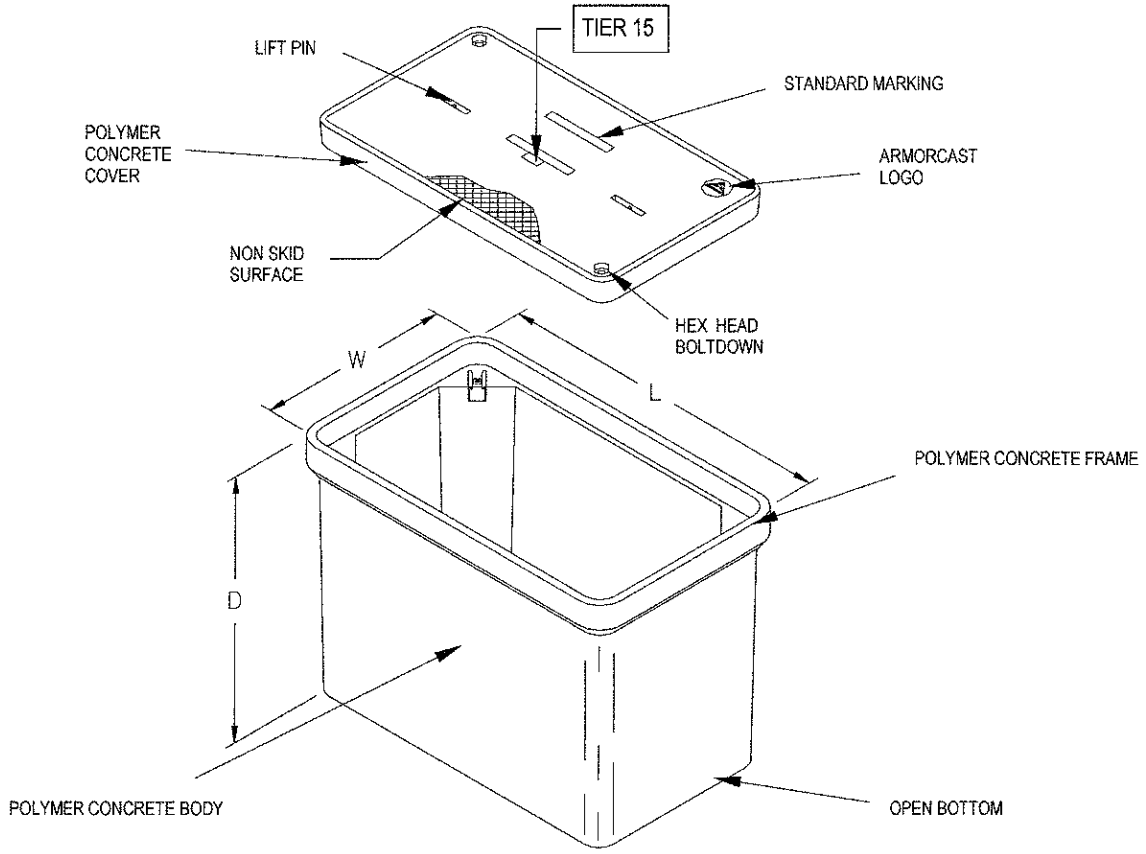

FEATURES

2009 VDOT Approved. All Polymer Concrete Straight Wall Box and Polymer Concrete Cover. Tier 15 Load Rated. Furnished with Gasketed Cover, Stainless Steel Hex-Head Bolts (JB-S3 Furnished With (4) Bolt Downs), and an Installed "J" Hook. Specify Cover Logo When Ordering - Varies Per Job.

NOMINAL DIMENSIONS Width x Length x Depth	V-DOT Number	ARMORCAST Assembly Part No.	ASSEMBLY Approx. Weight
13" x 24" x 24"	JB-S1	A6001946TAP-VA	135 lbs.
17" x 30" x 24"	JB-S2	A6001640TAP-VA	190 lbs.
24" x 36" x 24"	JB-S3	A6001974TAP-VA	295 lbs.

ARMORCAST

ARMORCAST PRODUCTS COMPANY
13230 Saticoy Street, North Hollywood, California 91605
Telephone: (818) 982-3600 / Fax: (818) 982-7742
Visit our web site: www.armorcastprod.com

October 2009

C.H.J. Incorporated
1355 E. Cooley Drive, Colton, CA 92324 • Phone (909) 824-7210 • Fax (909) 824-7209
15345 Anacapa Road, Suite D, Victorville, CA 92392 • Phone (760) 243-0506 • Fax (760) 243-1225

September 16, 2009

Armorcast Products Company
13230 Saticoy Street
North Hollywood, California 91605
Attention: Mr. W. M. "Wally" Sunnaa, P.E., Vice President - Engineering

Job No. 09495-5C

Subject: Structural Load Testing of Polymer Concrete Box and Cover Assemblies per ANSI/SCTE 77 2007 for Virginia Department of Transportation Armorcast 24 inch by 36 inch by 24 inch / A6001974TAP-VA

Dear Mr. Sunnaa:

At your request, C.H.J., Incorporated identified samples of the assemblies to be tested at your North Hollywood, California production facility on August 21, 2009. The samples were shipped to our Colton, California laboratory and tested on September 2 and 3, 2009.

The polymer concrete box and cover assemblies were tested in accordance with ANSI / SCTE 77 2007, "Specification for Underground Enclosure Integrity". Structural load tests on full-size products were performed per sections 7.0 to 7.5 of the specifications to tier 15 loading requirements. The detailed results of these tests are found on the following pages.

The A6001974TAP-VA polymer concrete box and cover assembly tested complies with ANSI / SCTE 77 2007 tier 15 structural load test requirements.

REGISTERED PROFESSIONAL ENGINEER
GEORGE BATTEY III
No. C34323
Exp. 9-30-11
CIVIL
STATE OF CALIFORNIA

SIGNED 9-16-09

Respectfully submitted,
C.H.J., INCORPORATED

George Battey III

George Battey III
Registered Civil Engineer No. 34323
Registration Expires 9-30-2011

GB:ndt
Enclosure

C-0002-006-1_ITS_FieldInfrastructure_SpecialOverSizeJunctionBox.pdf - Changemarks (1 Note)

1 - NCTA Ops 092410 AN / Dave Jones
Friday, September 24, 2010 11:34:48 AM

This item appears to be in substantial conformance with the Project Special Provisions (NCDOT ITS Design concurs)