NORTH CAROLINA PROFESSIONAL SEAL 026486 ENGINEER ROBERT J. ZIEMBA

8/26/13

SR- 5001BX

Project Special Provisions
(Version 12.2)
Signals and Intelligent Transportation Systems

Prepared By: RWH
26-Aug-13

Contents

1. 2012 STANDARD SPECIFICATIONS FOR ROADS & STRUCTURES 3
1.1. POLYMER CONCRETE (PC) JUNCTION BOXES (1091-5(B)) 3
1.2. JUNCTION BOXES (1098-5) 3
1.3. CONTROLLERS WITH CABINETS – MATERIAL (1751-2) 3
1.4. PEDESTALS (1743) 3

2. SIGNAL HEADS 4
2.1. MATERIALS 4
A. General: 4
B. Vehicle Signal Heads: 6
C. Pedestrian Signal Heads: 8
D. Signal Cable: 10

3. FIBER OPTIC CABLE 10
3.1. DESCRIPTION 10
3.2. MATERIALS 10
A. Drop Cable Assembly: 10
3.3. CONSTRUCTION METHODS 12
A. General: 12
B. Aerial Installation: 12
C. Underground Installation: 13
D. Installation of Drop Cable: 13
3.4. MEASURMENT AND PAYMENT 13

4. TRAFFIC SIGNAL SUPPORTS 14
4.1. METAL TRAFFIC SIGNAL SUPPORTS – ALL POLES 14
A. General: 14
B. Materials: 16
C. Construction Methods: 17
4.2. METAL STRAIN POLE 17
A. Materials: 17
B. Construction Methods: 19
4.3. DRILLED PIER FOUNDATIONS FOR METAL TRAFFIC SIGNAL POLES 19
A. Description: 20
B. Soil Test and Foundation Determination: 20
C. Drilled Pier Construction: 23
4.4. POLE NUMBERING SYSTEM 23
4.5. MEASUREMENT AND PAYMENT 23

5. CONTROLLERS WITH CABINETS 23
5.1. MATERIALS – TYPE 2070L CONTROLLERS 23
5.2. MATERIALS – GENERAL CABINETS 24

5.3. MATERIALS – TYPE 170E CABINETS 25
A. Type 170 E Cabinets General: *25*
B. Type 170 E Cabinet Electrical Requirements: *25*
C. Type 170 E Cabinet Physical Requirements: *32*
D. Model 2018 Enhanced Conflict Monitor: *33*
5.4. MATERIALS – TYPE 170 DETECTOR SENSOR UNITS 42
5.5. MATERIALS – TYPE 2070E CONTROLLERS 42

1. 2012 STANDARD SPECIFICATIONS FOR ROADS & STRUCTURES

The 2012 Standard Specifications are revised as follows:

1.1. Polymer Concrete (PC) Junction Boxes (1091-5(B))

Page 10-202, revise paragraph starting on line 9 to read "Provide polymer concrete (PC) boxes which have bolted covers and open bottoms. Provide vertical extensions of 6" to 12" as required by project special provisions."

Page 10-202, revise sentence beginning on line 14 to read "Other thermoplastic materials may be used for components which are not normally exposed to sunlight."

1.2. Junction Boxes (1098-5)

Page 10-212, sub-Section 1098-5(C) Oversized Junction Boxes

Revise sentence to read, "Provide oversized junction boxes and covers with minimum inside dimensions of 28"(l) x 15"(w) x 22"(h)."

1.3. Controllers with Cabinets – Material (1751-2)

Page 17-37, Section 1751-2 Material

Add the following paragraph:

When the plans or specifications require a Type 2070L controller, contractor may provide a Type 2070E controller. Unless otherwise allowed by the Engineer, provide controllers of only one type.

1.4. Pedestals (1743)

Page 17-34, Add the following new sub-Section:

1743-4 - Screw-In Helical Foundation Anchor Assembly

Description:

Furnish and install screw-in helical foundation as an alternative to the standard reinforced concrete foundation specified in Article 1743 "Pedestals" of the Standard Specifications, for supporting Type I and Type II Pedestals. Do not use for Type III Pedestals.

Materials for Type I – Pedestrian Pushbutton Post:

Fabricate pipe assembly consisting of a 4" diameter x 56" long pipe, single helical blade and square fixed attachment plate. Furnish pipe in accordance with ASTM A-53 ERW Grade B and include a 2" x 3" cable opening in the pipe at 18" below the attachment plate. Furnish steel attachment plate and helical blade in accordance with ASTM A-36. Include (4) slotted mounting holes in the attachment plate to fit bolt circles ranging from 7-3/4" to 14-3/4" diameter. Furnish additional 3/4" keyholes at slotted holes to permit anchor bolt installation and replacement from top surface. Include combination bolt-head retainer and dirt scrapers at the attachment plate underside to allow for a level or flush-mount plate installation with respect to the finished grade. Galvanize pipe assembly components in accordance with AASHTO M 111 or an approved equivalent.

Furnish (4) 3/4"-10NC x 3" square head anchor bolts to meet the requirements of ASTM 325. Provide (4) 3/4" plain flat galvanized washers, (4) 3/16" thick galvanized plate washers and (4) 3/4" galvanized hex nuts. Galvanize in accordance with AASHTO M 111 or an approved equivalent.

Construction Methods for Type I – Pedestrian Pushbutton Post:

Advance or mechanically screw foundation into soil up until top of attachment plate is level with finished grade. Slide the anchor bolt heads through the keyhole openings and under the attachment plate with threads pointing up. Bolt the pedestal base to the foundation attachment plate. For further construction methods, see manufacturer's installation drawings.

Materials for Type II – Normal-Duty Pedestal:

Fabricate pipe assembly consisting of a 6" diameter x 60" long, single helical blade, 1-1/4" diameter stinger rod and square fixed attachment plate. Furnish pipe in accordance with ASTM A-53 ERW Grade B using schedule 40 wall thickness and include a 2" x 3" cable opening in the pipe at 18" below the attachment plate. Furnish steel attachment plate, helical blade and stinger rod in accordance with ASTM A-36. Include (4) slotted mounting holes in the attachment plate to fit bolt circles ranging from 10" to 15" diameter. Furnish additional 1-1/4" keyholes at slotted holes to permit anchor bolt installation and replacement from top surface. Include combination bolt-head retainer and dirt scrapers at the attachment plate underside to allow for a level or flush-mount plate installation with respect to the finished grade. Galvanize pipe assembly components in accordance with AASHTO M 111 or an approved equivalent.

Furnish (4) 1"-8NC x 4" galvanized Grade 5 square head anchor bolts. Provide (4) 1" plain flat galvanized washers and (4) 1" galvanized hex nuts. Galvanize in accordance with AASHTO M 111 or an approved equivalent.

Construction Methods for Type II – Normal-Duty Pedestal:

Advance or mechanically screw foundation into soil up until top of attachment plate is level with finished grade. Slide the anchor bolt heads through the keyhole openings and under the attachment plate with threads pointing up. Bolt the pedestal base to the foundation attachment plate.

For further construction methods, see manufacturer's installation drawings.

Page 17-34, revise Measurement and Payment to sub-Section 1743-5.

Revise the last paragraph to read:

No measurement will be made for pedestal foundations, pedestal screw-in helical foundations, grounding systems and any peripheral pedestal mounting hardware as these are incidental to furnishing and installing pedestals.

2. SIGNAL HEADS

2.1. MATERIALS

A. General:

Fabricate vehicle signal head housings and end caps from die-cast aluminum. Fabricate 16-inch pedestrian signal head housings and end caps from die-cast aluminum. Provide visor mounting screws, door latches, and hinge pins fabricated from stainless steel. Provide interior screws, fasteners, and metal parts fabricated from stainless steel or corrosion resistant material.

Fabricate tunnel and traditional visors from sheet aluminum.

Paint all surfaces inside and outside of signal housings and doors. Paint outside surfaces of tunnel and traditional visors, messenger cable mounting assemblies, pole and pedestal mounting assemblies, and pedestrian pushbutton housings. Have electrostatically-applied, fused-polyester paint in highway yellow (Federal Standard 595C, Color Chip Number 13538) a minimum of 2.5 to

3.5 mils thick. Do not apply paint to the latching hardware or rigid vehicle signal head mounting brackets for mast-arm attachments.

Have the interior surfaces of tunnel and traditional visors painted an alkyd urea black synthetic baking enamel with a minimum gloss reflectance and meeting the requirements of MIL-E-10169, "Enamel Heat Resisting, Instrument Black."

For pole mounting, provide side of pole mounting assemblies with framework and all other hardware necessary to make complete, watertight connections of the signal heads to the poles and pedestals. Fabricate the mounting assemblies and frames from aluminum with all necessary hardware, screws, washers, etc. to be stainless steel. Provide mounting fittings that match the positive locking device on the signal head with the serrations integrally cast into the brackets. Provide upper and lower pole plates that have a 1 ¼-inch vertical conduit entrance hubs with the hubs capped on the lower plate and 1 ½-inch horizontal hubs. Ensure that the assemblies provide rigid attachments to poles and pedestals so as to allow no twisting or swaying of the signal heads. Ensure that all raceways are free of sharp edges and protrusions, and can accommodate a minimum of ten Number 14 AWG conductors.

For pedestal mounting, provide a post-top slipfitter mounting assembly that matches the positive locking device on the signal head with serrations integrally cast into the slipfitter. Provide stainless steel hardware, screws, washers, etc. Provide a minimum of six 3/8 X 3/4-inch long square head bolts for attachment to pedestal. Provide a center post for multi-way slipfitters.

For light emitting diode (LED) traffic signal modules, provide the following requirements for inclusion on the Department's Qualified Products List for traffic signal equipment.

1. Sample submittal,
2. Third-party independent laboratory testing results for each submitted module with evidence of testing and conformance with all of the Design Qualification Testing specified in section 6.4 of each of the following Institute of Transportation Engineers (ITE) specifications:
   - Vehicle Traffic Control Signal Heads – Light Emitting Diode (LED) Circular Signal Supplement
   - Vehicle Traffic Control Signal Heads – Light Emitting Diode (LED) Vehicle Arrow Traffic Signal Supplement
   - Pedestrian Traffic Control Signal Indications –Light Emitting Diode (LED) Signal Modules.

   (Note: The Department currently recognizes two approved independent testing laboratories. They are Intertek ETL Semko and Light Metrics, Incorporated with Garwood Laboratories. Independent laboratory tests from other laboratories may be considered as part of the QPL submittal at the discretion of the Department,
3. Evidence of conformance with the requirements of these specifications,
4. A manufacturer's warranty statement in accordance with the required warranty, and
5. Submittal of manufacturer's design and production documentation for the model, including but not limited to, electrical schematics, electronic component values, proprietary part numbers, bill of materials, and production electrical and photometric test parameters.

6. Evidence of approval of the product to bear the Intertek ETL Verified product label for LED traffic signal modules.

In addition to meeting the performance requirements for the minimum period of 60 months, provide a written warranty against defects in materials and workmanship for the modules for a period of 60 months after installation of the modules. During the warranty period, the manufacturer must provide new replacement modules within 45 days of receipt of modules that have failed at no cost to the State. Repaired or refurbished modules may not be used to fulfill the manufacturer's warranty obligations. Provide manufacturer's warranty documentation to the Department during evaluation of product for inclusion on Qualified Products List (QPL).

B. Vehicle Signal Heads:

Comply with the ITE standard "Vehicle Traffic Control Signal Heads". Provide housings with provisions for attaching backplates.

Provide visors that are 10 inches in length for 12-inch vehicle signal heads.

Provide a termination block with one empty terminal for field wiring for each indication plus one empty terminal for the neutral conductor. Have all signal sections wired to the termination block. Provide barriers between the terminals that have terminal screws with a minimum Number 8 thread size and that will accommodate and secure spade lugs sized for a Number 10 terminal screw.

Mount termination blocks in the yellow signal head sections on all in-line vehicle signal heads. Mount the termination block in the red section on five-section vehicle signal heads.

Furnish vehicle signal head interconnecting brackets. Provide one-piece aluminum brackets less than 4.5 inches in height and with no threaded pipe connections. Provide hand holes on the bottom of the brackets to aid in installing wires to the signal heads. Lower brackets that carry no wires and are used only for connecting the bottom signal sections together may be flat in construction.

For messenger cable mounting, provide messenger cable hangers, wire outlet bodies, balance adjusters, bottom caps, wire entrance fitting brackets, and all other hardware necessary to make complete, watertight connections of the vehicle signal heads to the messenger cable. Fabricate mounting assemblies from malleable iron or steel and provide serrated rings made of aluminum. Provide messenger cable hangers and balance adjusters that are galvanized before being painted. Fabricate balance adjuster eyebolt and eyebolt nut from stainless steel or galvanized malleable iron. Provide messenger cable hangers with U-bolt clamps. Fabricate washers, screws, bolts, clevis pins, cotter pins, nuts, and U-bolt clamps from stainless steel.

Provide LED vehicular traffic signal modules (hereafter referred to as modules) that consist of an assembly that uses LEDs as the light source in lieu of an incandescent lamp for use in traffic signal sections. Use LEDs that are aluminum indium gallium phosphorus (AlInGaP) technology for red and yellow indications and indium gallium nitride (InGaN) for green indications. Install the ultra bright type LEDs that are rated for 100,000 hours of continuous operation from -40°F to +165°F. Design modules to have a minimum useful life of 60 months and to meet all parameters of this specification during this period of useful life.

For the modules, provide spade terminals crimped to the lead wires and sized for a #10 screw connection to the existing terminal block in a standard signal head. Do not provide other types of crimped terminals with a spade adapter.

Ensure the power supply is integral to the module assembly. On the back of the module, permanently mark the date of manufacture (month & year) or some other method of identifying date of manufacture.

Tint the red, yellow and green lenses to correspond with the wavelength (chromaticity) of the LED. Transparent tinting films are unacceptable. Provide a lens that is integral to the unit with a smooth outer surface.

1. LED Circular Signal Modules:

Provide modules in the following configurations: 12-inch circular sections, and 8-inch circular sections. All makes and models of LED modules purchased for use on the State Highway System shall appear on the current NCDOT Traffic Signal Qualified Products List (QPL).

Provide the manufacturer's model number and the product number (assigned by the Department) for each module that appears on the 2012 or most recent Qualified Products List. In addition, provide manufacturer's certification in accordance with Article 106-3 of the *Standard Specifications,* that each module meets or exceeds the ITE "Vehicle Traffic Control Signal Heads – Light Emitting Diode (LED) Circular Signal Supplement" dated June 27, 2005 (hereafter referred to as VTCSH Circular Supplement) and other requirements stated in this specification.

Provide modules that meet the following requirements when tested under the procedures outlined in the VTCSH Circular Supplement:

Module Type	Max. Wattage at 165° F	Nominal Wattage at 77° F
12-inch red circular	17	11
12-inch green circular	15	15

For yellow circular signal modules, provide modules tested under the procedures outlined in the VTCSH Circular Supplement to insure power required at 77° F is 22 Watts or less for the 12-inch circular module.

Note: Use a wattmeter having an accuracy of ±1% to measure the nominal wattage and maximum wattage of a circular traffic signal module. Power may also be derived from voltage, current and power factor measurements.

2. LED Arrow Signal Modules

Provide 12-inch omnidirectional arrow signal modules. All makes and models of LED modules purchased for use on the State Highway System shall appear on the current NCDOT Traffic Signal Qualified Products List (QPL).

Provide the manufacturer's model number and the product number (assigned by the Department) for each module that appears on the 2012 or most recent Qualified Products List. In addition, provide manufacturer's certification in accordance with Article 106-3 of the *Standard Specifications,* that each module meets or exceeds the requirements for 12-inch omnidirectional modules specified in the ITE "Vehicle Traffic Control Signal Heads – Light Emitting Diode (LED) Vehicle Arrow Traffic Signal Supplement" dated July 1, 2007 (hereafter referred to as VTCSH Arrow Supplement) and other requirements stated in this specification.

Provide modules that meet the following requirements when tested under the procedures outlined in the VTCSH Arrow Supplement:

Module Type	Max. Wattage at 165° F	Nominal Wattage at 77° F
12-inch red arrow	12	9
12-inch green arrow	11	11

For yellow arrow signal modules, provide modules tested under the procedures outlined in the VTCSH Arrow Supplement to insure power required at 77° F is 12 Watts or less.

Note: Use a wattmeter having an accuracy of ±1% to measure the nominal wattage and maximum wattage of an arrow traffic signal module. Power may also be derived from voltage, current and power factor measurements.

C. Pedestrian Signal Heads:

Provide pedestrian signal heads with international symbols that meet the MUTCD. Do not provide letter indications.

Comply with the ITE standard for "Pedestrian Traffic Control Signal Indications" and the following sections of the ITE standard for "Vehicle Traffic Control Signal Heads" in effect on the date of advertisement:

- Section 3.00 - "Physical and Mechanical Requirements"
- Section 4.01 - "Housing, Door, and Visor: General"
- Section 4.04 - "Housing, Door, and Visor: Materials and Fabrication"
- Section 7.00 - "Exterior Finish"

Provide a double-row termination block with three empty terminals and number 10 screws for field wiring. Provide barriers between the terminals that accommodate a spade lug sized for number 10 terminal screws. Mount the termination block in the hand section. Wire all signal sections to the terminal block.

Where required by the plans, provide 16-inch pedestrian signal heads with traditional three-sided, rectangular visors, 6 inches long.

Provide 2-inch diameter pedestrian push-buttons with weather-tight housings fabricated from die-cast aluminum and threading in compliance with the NEC for rigid metal conduit. Provide a weep hole in the housing bottom and ensure that the unit is vandal resistant.

Provide push-button housings that are suitable for mounting on flat or curved surfaces and that will accept 1/2-inch conduit installed in the top. Provide units that have a heavy duty push-button assembly with a sturdy, momentary, normally-open switch. Have contacts that are electrically insulated from the housing and push-button. Ensure that the push-buttons are rated for a minimum of 5 mA at 24 volts DC and 250 mA at 12 volts AC.

Provide standard R10-3 signs with mounting hardware that comply with the MUTCD in effect on the date of advertisement. Provide R10-3E signs for countdown pedestrian heads and R10-3B for non-countdown pedestrian heads.

Design the LED pedestrian traffic signal modules (hereafter referred to as modules) for installation into standard pedestrian traffic signal sections that do not contain the incandescent signal section reflector, lens, eggcrate visor, gasket, or socket. Provide modules that consist of an assembly that uses LEDs as the light source in lieu of an incandescent lamp. Use LEDs that are of the latest

aluminum indium gallium phosphorus (AlInGaP) technology for the Portland Orange hand and countdown displays. Use LEDs that are of the latest indium gallium nitride (InGaN) technology for the Lunar White walking man displays. Install the ultra-bright type LEDs that are rated for 100,000 hours of continuous operation from -40°F to +165°F. Design modules to have a minimum useful life of 60 months and to meet all parameters of this specification during this period of useful life.

Design all modules to operate using a standard 3 - wire field installation. Provide spade terminals crimped to the lead wires and sized for a #10 screw connection to the existing terminal block in a standard pedestrian signal housing. Do not provide other types of crimped terminals with a spade adapter.

Ensure the power supply is integral to the module assembly. On the back of the module, permanently mark the date of manufacture (month & year) or some other method of identifying date of manufacture.

Provide modules in the following configuration: 16-inch displays which have the solid hand/walking man overlay on the left and the countdown on the right, and 12-inch displays which have the solid hand/walking man module as an overlay. All makes and models of LED modules purchased for use on the State Highway System shall appear on the current NCDOT Traffic Signal Qualified Products List (QPL).

Provide the manufacturer's model number and the product number (assigned by the Department) for each module that appears on the 2012 or most recent Qualified Products List. In addition, provide manufacturer's certification in accordance with Article 106-3 of the *Standard Specifications,* that each module meets or exceeds the ITE "Pedestrian Traffic Control Signal Indicators - Light Emitting Diode (LED) Signal Modules" dated August 04, 2010 (hereafter referred to as PTCSI Pedestrian Standard) and other requirements stated in this specification.

Provide modules that meet the following requirements when tested under the procedures outlined in the PTCSI Pedestrian Standard:

Module Type	Max. Wattage at 165° F	Nominal Wattage at 77° F
Hand Indication	16	13
Walking Man Indication	12	9
Countdown Indication	16	13

Note: Use a wattmeter having an accuracy of ±1% to measure the nominal wattage and maximum wattage of a circular traffic signal module. Power may also be derived from voltage, current and power factor measurements.

Provide module lens that is hard coated or otherwise made to comply with the material exposure and weathering effects requirements of the Society of Automotive Engineers (SAE) J576. Ensure all exposed components of the module are suitable for prolonged exposure to the environment, without appreciable degradation that would interfere with function or appearance.

Ensure the countdown display continuously monitors the traffic controller to automatically learn the pedestrian phase time and update for subsequent changes to the pedestrian phase time.

Ensure the countdown display begins normal operation upon the completion of the preemption sequence and no more than one pedestrian clearance cycle.

D. Signal Cable:

Furnish 16-4 and 16-7 signal cable that complies with IMSA specification 20-1 except provide the following conductor insulation colors:

- For 16-4 cable: white, yellow, red, and green
- For 16-7 cable: white, yellow, red, green, yellow with black stripe tracer, red with black stripe tracer, and green with black stripe tracer. Apply continuous stripe tracer on conductor insulation with a longitudinal or spiral pattern.

Provide a ripcord to allow the cable jacket to be opened without using a cutter. IMSA specification 19-1 will not be acceptable. Provide a cable jacket labeled with the IMSA specification number and provide conductors constructed of stranded copper.

3. FIBER OPTIC CABLE

3.1. DESCRIPTION

Furnish and install single mode fiber-optic (SMFO) drop cable assemblies, communications cable identification markers, lashing wire, and all necessary hardware.

3.2. MATERIALS

Refer to Division 10.

Item	Section
Cable Identification Markers	1098-10
Fiber-Optic Cable	1098-10
Lashing Wire and Hardware	1098-6

Furnish material, equipment and hardware under this section that is pre-approved on the ITS and Signals QPL.

A. Drop Cable Assembly:

Furnish a drop cable assembly to provide communications links between splice enclosures and Ethernet edge switches mounted in controller cabinets.

Provide an assembly that is factory-assembled and factory pre-tested with the cable length as determined by the Contractor to reach between the controller cabinet and splice enclosure plus the designated lengths of stored cable. Furnish a drop a cable assembly comprised of fiber-optic cable that has been factory pre-terminated on a factory pre-connectorized patch panel with six PC/ST connectors to form an integral pre-assembled unit. Furnish a drop-cable assembly that requires no field assembly, connectorization or termination other than splicing the free end of the drop cable into the fiber-optic trunk cable in a splice enclosure external to the cabinet.

Provide a drop cable assembly with a patch panel housed in a slim, compact, modular housing (i.e., strip). The compact modular patch panel shall have a rugged, durable housing that can be surface-mounted vertically to the face of the 19-inch equipment rack rail inside a controller cabinet. The dimensions of the modular patch panel shall not exceed 10" (h) x 1.75" (w) x 1.75" (d).

Furnish highly flexible, low bend radius single-mode fiber-optic cable that is of gel-free (i.e., dry cable) construction as described Subarticle 1098-10(A). A low bend radius cable is defined as a fiber-optic cable whose manufacturer-specified minimum bend radius does not exceed 5" when

loaded and 4" when installed. Provide outdoor-rated, non-armored, riser-rated cable. Provide UV rated cable.

Use single-mode fiber-optic cable that does not exceed attenuation of 0.30 dB/km at 1550 nm and 0.40 dB/km at 1310 nm. Ensure attenuation loss for complete drop cable assembly does not exceed a mean value of 1.5 dB.

Provide metal connector housing, ceramic ferrules and coupler inserts. Provide a connector attenuation of .20 dB and a reflectance of < -40 dB SPC/<-55 dB UPC. Use heat-cured epoxy material.

Provide length markings in sequential feet and within one percent of actual cable length. Ensure character height of markings is approximately 0.10".

Provide all mounting hardware, brackets and fasteners required to securely mount the patch panel to the face of the rack rail in accordance with the manufacturer's instructions.

Furnish SMFO jumpers that are a minimum of 3 feet in length with factory-assembled ST/PC connectors on one end and LC/PC connectors on the other end for connecting Ethernet edge switches to the fiber-optic patch panels on the drop cable assemblies. Furnish the LC/PC connectors in a molded snap plug assembly labeled "A" and "B" and designed to insert both connectors simultaneously. Furnish each pair of jumpers with uniquely colored strain relief boots (i.e., blue and white) such that the boot color on the ST/PC end matches the boot color on the LC/PC end. In the molded snap plug assembly, install the jumper with the blue strain relief boot on the "A" side and the jumper with white strain relief boot on the "B" side.

Ensure SMFO jumpers meet the operating characteristics of the SMFO cable with which they are to be coupled.

Communications Cable Identification Markers:

Furnish yellow communications cable identification markers that are resistant to fading when exposed to UV sources and changes in weather. Use markers designed to coil around fiber-optic cable that do not slide or move along the surface of the cable once installed. Ensure exposure to UV light and weather does not affect the markers natural coiling effect or deteriorate performance. Provide communications cable wraps that permit writing with an indelible marking pen and contain the following text in black:

WARNING
CITY OF RALEIGH FIBER-OPTIC CABLE
CONTACT TELEPHONE NUMBER:
(919) 996-3020

WARNING
CITY OF RALEIGH FIBER-OPTIC CABLE

Figure 2-1. Communication Cable Identification Marker.

Overall Marker Dimensions: 7"(l) x 4"(w)

Lettering Height: 3/8"for WARNING, 1/4" for all other lettering

Submit a sample of proposed communications cable identification markers to the Engineer for approval before installation.

3.3. CONSTRUCTION METHODS

A. General:

Provide cable manufacturer's attenuation and Optical Time Domain Reflectometer (OTDR) testing data for each reel of cable upon request.

Install SMFO communications cable, communications cable identification markers, lashing wire and all necessary hardware.

Comply with manufacturer's recommendations. Install communications cable on signal poles, utility poles, messenger cable and in conduits as required to bring the fiber-optic cable into and, if necessary, out of each splice enclosure.

Take all precautions necessary to ensure cable is not damaged during storage, handling and installation. Do not violate minimum bending radius of 20 times the radius of cable diameter or manufacturer's recommendation, whichever is greater. Do not step on cable nor run over cable with vehicles or equipment. Do not pull cable over or around obstructions or along the ground.

Determine lengths of cable necessary to reach from termination-point to termination point. Install cable in continuous lengths between approved splicing facilities. Additionally, provide a sufficient amount of slack cable to allow for an additional 20 ft. of cable to be present after removal of outer sheath for termination. Measure slack cable by extending cable straight out of cabinet door or junction box.

Keep cable ends sealed at all times during installation to effectively prevent the ingress of moisture. Use approved heat shrink cable end cap. Do not use tape to seal cable ends.

Before installing cable, provide 3 copies of cable manufacturer's recommended and maximum pulling tension. Do not exceed manufacturer's recommended pulling tension. Use pulling grips containing a rotating swivel. Coil cable in a figure-8 configuration whenever cable is unreeled for subsequent pulling.

Install fiber-optic cable in separate 2" risers with heat shrink tubing or conduits. Do not share risers or conduits containing fiber-optic cable with other type cable.

B. Aerial Installation:

Double lash fiber-optic cable to messenger cable with one 360° spiral per foot.

Use pole attachment hardware and roller guides with safety clips to install aerial run cable.

Maintain tension during the pulling process for aerial run cable by using an approved mechanical clutch (dynamometer) device. Do not allow cable to contact the ground or other obstructions between poles during installation. Do not use a motorized vehicle to generate cable pulling forces.

Use a cable suspension clamp when attaching cable tangent to a pole. Select and place cable blocks and corner blocks so as not to exceed the cable's minimum bending radius. Do not pull cable across J-hooks.

Store 100 ft. of each fiber-optic cable on all cable runs that are continuous without splices where specified. Obtain approval for spare cable storage locations. Store spare fiber optic cable on fiber-optic cable storage racks (snow shoes). Locate spare cable storage in the middle of spans between termination points. Do not store spare fiber-optic cable over the roadway or driveways.

Install one communications cable identification marker within 36" of pole attachment points and at locations where more than one cable originates or terminates.

C. Underground Installation:

Install fiber-optic cable underground in conduit using cable pulling lubricants recommended by the fiber-optic cable manufacturer.

Obtain approval of cable pulling lubricant and method of pulling before installing underground fiber-optic cable.

Use a dynamometer (clutch device) so as not to exceed maximum allowable pulling tension if cable is pulled by mechanical means. Do not use a motorized vehicle to generate cable pulling forces.

Keep tension on cable reel and pulling line at start of each pull. Do not release tension if pulling operation is halted. Restart pulling operation by gradually increasing tension until cable is in motion.

For pulling cable through manholes, junction boxes and vaults, feed cable by manually rotating the reel. Do not pull cable through intermediate junction boxes, handholds or openings in conduit unless otherwise approved.

Install communications cable identification markers on each communications cable entering a junction box.

D. Installation of Drop Cable:

Determine length of drop cable needed, including slack, to reach from cabinet mounting point to termination point.

At aerial splice enclosures, store 50 ft. of slack cable on cable storage racks. At below ground splice enclosures, coil 30 ft. of slack cable in manhole or junction box where enclosure is located.

Mount the patch panel of the drop cable assembly vertically to the surface of the rack frame with screws, mounting brackets and hardware provided with the drop cable assembly. Mount the patch panel in a location convenient to the Ethernet switch to facilitate installation of 3-foot SMFO jumpers between them. Mount the patch panel with the ST connectors in a downward pointing orientation. Do not use cable ties or cable management hardware on the drop cable within the cabinet. Instead, leave 15' of drop cable loosely coiled in the cabinet bottom.

Install SMFO jumpers between the appropriate connectors on the patch panel of the drop cable assembly and the Ethernet edge switch.

Label all connectors, pigtails, and the connector panel. At the aerial splice enclosure location, cap off all unused fibers and label to correspond with the connector panel.

Where the Plans call for a fiber-optic drop cable to be installed in an existing riser with existing fiber-optic cable, remove heat shrink tubing. Install the new fiber-optic drop cable assembly in the existing riser and install new heat shrink tubing at the top of the existing riser using a heat shrink tubing retrofit kit. Once splicing has been completed, permanently store all remaining spare cable on fiber-optic cable storage racks.

3.4. MEASURMENT AND PAYMENT

Drop Cable Assembly will be measured and paid as the actual number of new drop cable assemblies furnished, installed and accepted.

No measurement will be made for terminating, splicing and testing fiber-optic cable, or for communications cable identification markers, as these will be incidental to the installation of fiber-optic cable.

No measurement will be made for terminating, splicing and testing new fiber optic cable or drop cable assemblies, for fiber-optic jumpers, or communications cable identification markers, as these will be incidental to the installation of drop cable assemblies.

Payment will be made under:

Pay Item	**Pay Unit**
Drop Cable Assembly	Each

4. TRAFFIC SIGNAL SUPPORTS

4.1. METAL TRAFFIC SIGNAL SUPPORTS – ALL POLES

A. General:

Furnish and install metal strain poles and metal poles with mast arms, grounding systems, and all necessary hardware. The work covered by this special provision includes requirements for the design, fabrication, and installation of both standard and custom/site specifically designed metal traffic signal supports and associated foundations.

Provide metal traffic signal support systems that contain no guy assemblies, struts, or stay braces. Provide designs of completed assemblies with hardware that equals or exceeds AASHTO *Standard Specifications for Structural Supports for Highway Signs, Luminaires and Traffic Signals* 5th Edition, 2009 (hereafter called 5th Edition AASHTO), including the latest interim specifications. Provide assemblies with a round or near-round (18 sides or more) cross-section, or a multi sided cross section with no less than six sides. The sides may be straight, convex, or concave.

Pole heights shown on signal plans are estimated from available data for bid purposes. Prior to furnishing metal signal poles, use field measurements and adjusted cross-sections to determine whether pole heights are sufficient to obtain required clearances. If pole heights are not sufficient, the Contractor should immediately notify the Engineer of the required revised pole heights.

Ensure that metal signal poles permit cables to be installed inside poles and any required mast arms. For holes in the poles and arms used to accommodate cables, provide full-circumference grommets. Arm flange plate wire access holes should be deburred, non grommeted, and oversized to fit around the 2" diameter grommeted shaft flange plate wire access hole.

After fabrication, have steel poles, required mast arms, and all parts used in the assembly hot-dip galvanized per section 1076. Design structural assemblies with weep holes large enough and properly located to drain molten zinc during galvanization process. Provide hot-dip galvanizing on structures that meets or exceeds ASTM Standard A-123. Provide galvanizing on hardware that meets or exceeds ASTM Standard A-153. Ensure that threaded material is brushed and retapped as necessary after galvanizing. Perform repair of damaged galvanizing that complies with the following:

Repair of Galvanizing ..... Article 1076-7

Standard Drawings for Metal Poles are available that supplement these project special provisions. These drawings are located on the Department's website:

https://connect.ncdot.gov/resources/safety/pages/ITS-Design-Resources.aspx

Comply with article 1098-1B of the *2012 STANDARD SPECIFICATIONS FOR ROADS & STRUCTURES*, hereinafter referred to as the *Standard Specifications* for submittal requirements. Furnish shop drawings for approval. Provide the copies of detailed shop drawings for each type of structure as summarized below. Ensure that shop drawings include material specifications for each component and identify welds by type and size on the drawing details, not in table format. **Do not release structures for fabrication until shop drawings have been approved by NCDOT**. Provide an itemized bill of materials for all structural components and associated connecting hardware on the drawings.

Comply with article 1098-1A of the *Standard Specifications* for Qualified Products List (QPL) submittals. All shop drawings must include project location description, signal inventory number(s) and a project number or work order number on the drawings.

Summary of information required for metal pole review submittal:

Item	**Hardcopy Submittal**	**Electronic Submittal**	**Comments / Special Instructions**
Sealed, Approved Signal Plan/Loading Diagram	1	1	All structure design information needs to reflect the latest approved signal plans
Custom Pole Shop Drawings	4 sets	1 set	Submit drawings on 11" x 17" format media Show NCDOT inventory number(s) in or above the title block
Standard Pole Shop Drawings (from the QPL)	4 sets	1 set	Submit drawings on 11" x 17" format media Show NCDOT inventory number(s) in or above the title block
Structure Calculations	1 set	1 set	Not required for Standard QPL Poles
Standard Pole Foundation Drawings	1 set	1 set	Submit drawings on 11" x 17" format media. Submit a completed Standard Foundation Selection form for each pole using foundation table on Metal Pole Drawing M-8.
Custom Foundation Drawings	4 sets	1 set	Submit drawings on 11" x 17" format media. If QPL Poles are used, include the corresponding QPL pole shop drawings with this submittal.
Foundation Calculations	1	1	**Submit LPile calculations per Section 11.4 of this specification.** Not required for Standard QPL Poles
Soil Boring Logs and Report	1	1	Report should include a location plan and a soil classification report including soil capacity, water level, hammer efficiency, soil bearing pressure, soil density, etc. for each pole.

NOTE – All shop drawings and custom foundation design drawings must be sealed by a Professional Engineer licensed in the state of North Carolina. All geotechnical information must be sealed by either a Professional Engineer or geologist licensed in the state of North Carolina. Include a title block and revision block on the shop drawings and foundation drawings showing the NCDOT inventory number.

Shop drawings and foundation drawings may be submitted together or separately for approval. However, shop drawings must be approved before foundations can be reviewed. Foundation designs will be returned without review if the associated shop drawing has not been approved. Incomplete submittals will be returned without review.

B. Materials:

Fabricate metal pole and arm shaft from coil or plate steel to meet the requirements of ASTM A 595 Grade A tubes. For structural steel shapes, plates and bars use A572 Gr 50 min or ASTM A709 Gr 50 min. Provide pole and arm shafts that are round in cross section or multisided tubular shapes and have a uniform linear taper of 0.14 in/ft. Construct shafts from one piece of single ply plate or coil so there are no circumferential weld splices. Galvanize in accordance with AASHTO M 111 or an approved equivalent.

Use the submerged arc process or other NCDOT previously approved process suitable for pole shaft and arms to continuously weld pole shafts and arm shafts along their entire length. The longitudinal seam weld will be finished flush to the outside contour of the base metal. Ensure shafts have no circumferential welds except at the lower end joining the shaft to the pole base and arm base. Provide welding that conforms to Article 1072-18 of the *Standard Specifications*, except that no field welding on any part of the pole will be permitted unless approved by a qualified engineer.

Refer to Metal Pole Standard Drawing Sheets M2 through M5 for fabrication details. Fabricate anchor bases from plate steel meeting, as a minimum, the requirements of ASTM A 36M or cast steel meeting the requirements of ASTM A 27M Grade 485-250, AASHTO M270 Gr 36 or an approved equivalent. Conform to the applicable bolt pattern and orientation as shown on Metal Pole Standard Drawing Sheet M2.

Ensure all hardware is galvanized steel or stainless steel. The Contractor is responsible for ensuring that the designer/fabricator specifies connecting hardware and/or materials that do not create a dissimilar metal corrosive reaction.

Provide a minimum of four (4) 1-1/2" diameter high strength bolts for connection between arm plate and pole plate. Increase number of bolts to six (6) 1-1/2" diameter high strength bolts when arm lengths are greater than 50'-0" long.

Unless otherwise required by the design, ensure each anchor rod is 2" diameter and 60" length. Provide 10" minimum thread projection at the top of the rod, and 8" minimum at the bottom of the rod. Use anchor rod assembly and drilled pier foundation materials that meet the *Foundations and Anchor Rod Assemblies for Metal Poles* provision.

For each structural bolt and other steel hardware, hot dip galvanizing shall conform to the requirements of AASHTO M 232 (ASTM A 153). Ensure end caps for poles or mast arms are constructed of cast aluminum conforming to Aluminum Alloy 356.0F.

Provide a circular anchor bolt lock plate that will be secured to the anchor bolts at the embedded end with 2 washers and 2 nuts. Provide a base plate template that matches the bolt circle diameter of

the anchor bolt lock plate. Construct plates and templates from ¼" minimum thick steel with a minimum width of 4". Galvanizing is not required for both plates.

Provide 4 heavy hex nuts and 4 flat washers for each anchor bolt. For nuts, use AASHTO M291 grade 2H, DH, or DH3 or equivalent material. For flat washers, use AASHTO M293 or equivalent material.

C. Construction Methods:

Erect signal support poles only after concrete has attained a minimum allowable compressive strength of 3000 psi. Install anchor rod assemblies in accordance with the *Foundations and Anchor Rod Assemblies for Metal Poles* provision.

For further construction methods, see construction methods for Metal Strain Pole, or Metal Pole with Mast Arm.

Connect poles to grounding electrodes and bond them to the electrical service grounding electrodes.

For holes in the poles used to accommodate cables, install grommets before wiring pole or arm. Do not cut or split grommets.

Attach the terminal compartment cover to the pole by a sturdy chain or cable. Ensure the chain or cable is long enough to permit the cover to hang clear of the compartment opening when the cover is removed, and is strong enough to prevent vandalism. Ensure the chain or cable will not interfere with service to the cables in the pole base.

Attach cap to pole with a sturdy chain or cable. Ensure the chain or cable is long enough to permit the cap to hang clear of the opening when the cap is removed.

Perform repair of damaged galvanizing that complies with the *Standard Specifications*, Article 1076-7 "Repair of Galvanizing."

Install galvanized wire mesh around the perimeter of the base plate to cover the gap between the base plate and top of foundation for debris and pest control.

Install a ¼" thick plate for concrete foundation tag to include: concrete grade, depth, diameter, and reinforcement sizes of the installed foundation.

4.2. METAL STRAIN POLE

A. Materials:

Provide either steel or aluminum poles as indicated on the plans.

Comply with the following for Aluminum Poles:

- Have poles fabricated from Aluminum Association Alloy 6061-T6, 6063-T6, or approved equivalent. The structural requirement does not pertain to castings that are decorative only.
- Have shafts tapered by spinning and cold-working a seamless extruded tube of the aluminum alloy.
- Have shafts with no circumferential welds except at the lower end joining the shaft to the base.

- Ensure aluminum poles are properly protected from damage prior to shipment.
- Have bases of the shaft fabricated in accordance with the Aluminum Association Alloy 356.0-T6, and of adequate strength, shape and size, and capable of withstanding the design load of the shaft.
- Have aluminum surfaces in contact with concrete or dissimilar metal coated with bituminous paint.

Comply with the following for Steel Poles:

- Have shafts of the tapered tubular type and fabricated of steel conforming to ASTM A-595 Grade A or an approved equivalent.
- Have galvanization in accordance with AASHTO M 111 or an approved equivalent.
- Have shafts that are continuously welded for the entire length by the submerged arc process, and with exposed welds ground or rolled smooth and flush with the base metal. Provide welding that conforms to Article 1072-18 per *Standard Specification* except that no field welding on any part of the pole will be permitted.
- Have anchor bases for steel poles fabricated from plate steel meeting as a minimum the requirements of ASTM A 36M or cast steel meeting the requirements of ASTM A 27M Grade 485-250 or an approved equivalent.

For each strain pole, provide 2 messenger cable (span wire) clamps and associated hardware for attachment of support cable of the messenger cable suspension. Ensure that diameter of the clamp is appropriate to its location on the pole and that the diameter of the clamps is appropriately designed to be adjustable from 1'-6" below the top, down to 6'-6" below the top of the pole. Do not attach more than one support cable to a messenger cable clamp.

For strain poles, provide a minimum of three (3) 2 inch (50 mm) holes equipped with an associated coupling and weatherhead on the messenger cable load side of the pole to accommodate passage of signal cables from inside the pole to the suspension. Provide galvanized threaded plugs for all unused couplings at pole entrance points. Refer to Metal Pole Standard Drawing Sheet M3 for fabrication details.

Provide a grounding lug(s) in the approximate vicinity of the messenger cable clamp for bonding and grounding messenger cable. Lugs must accept #4 or #6 AWG wire to bond messenger cables to the pole in order to provide an effective ground fault circuit path. Refer to Metal Pole Standard Drawing Sheet M6 for construction details.

Have poles permanently stamped above the hand holes with the identification tag details as shown on Metal Pole Standard Drawing Sheet M2.

Provide liquid tight flexible metal conduit (Type LFMC), liquid tight flexible nonmetallic conduit (Type LFNC), high density polyethylene conduit (Type HDPE), or approved equivalent to isolate conductors feeding luminaires.

Fabricate poles from a single piece of steel or aluminum with single line seam weld with no transverse butt welds. Fabrication of two ply pole shafts is unacceptable with the exception of fluted shafts. Provide tapers for all shafts that begin at base and that have diameters which decrease uniformly at the rate of not more than 0.14 inch per foot (11.7 millimeters per meter) of length.

Ensure that allowable pole deflection does not exceed that allowed per 5th Edition AASHTO. For messenger cable poles (with primarily transverse loads), ensure that maximum deflection at the top of the pole does not exceed 2.5 percent of the pole height. For mast arm poles (with primarily moment loads), ensure that maximum angular rotation of the top of the pole does not exceed 1° 40'.

Provide four anchor nuts and four washers for each anchor bolt. Ensure that anchor bolts have required diameters, lengths, and positions, and will develop strengths comparable to their respective poles.

Provide a terminal compartment with cover and screws in each pole that encompasses the hand hole and contains a 12-terminal barrier type terminal block. Provide two terminal screws with a removable shorting bar between them for each termination. Furnish terminal compartment covers attached to the pole by a sturdy chain or cable approved by the Engineer. Ensure that the chain or cable is long enough to permit the cover to hang clear of the compartment opening when the cover is removed, and is strong enough to prevent vandals from being able to disconnect the cover from the pole. Ensure that the chain or cable will not interfere with service to the cables in the pole base.

Install grounding lugs that will accept #4 or #6 AWG wire to electrically bond messenger cables to the pole. Refer to Metal Pole Standard Drawing Sheet M6 for construction details.

For each pole, provide a 1/2 inch minimum thread diameter, coarse thread stud and nut for grounding which will accommodate #6 AWG ground wire. Ensure that the lug is electrically bonded to the pole and is conveniently located inside the pole at the hand hole.

Provide a removable pole cap with stainless steel attachment screws for the top of each pole. Ensure that the cap is cast aluminum conforming to Aluminum Association Alloy 356.0F. Furnish cap attached to the pole with a sturdy chain or cable approved by the Engineer. Ensure that the chain or cable is long enough to permit the cap to hang clear of the pole-top opening when the cap is removed.

When required by the plans, furnish couplings 42 inches above the bottom of the base for mounting of pedestrian pushbuttons. Provide mounting points consisting of 1-1/2 inch internally threaded half-couplings that comply with the NEC and that are mounted within the poles. Ensure that couplings are essentially flush with the outside surfaces of the poles and are installed before any required galvanizing. Provide a threaded plug in each mounting point. Ensure that the surface of the plug is essentially flush with the outer end of the mounting point when installed and has a recessed hole to accommodate a standard wrench.

B. Construction Methods:

Install metal poles, hardware, and fittings as shown on the manufacturer's installation drawings. Install metal poles so that when the pole is fully loaded it is within 2 degrees of vertical. Install poles with the manufacturer's recommended "rake." Use threaded leveling nuts to establish rake if required.

4.3. DRILLED PIER FOUNDATIONS FOR METAL TRAFFIC SIGNAL POLES

Analysis procedures and formulas shall be based on AASHTO, ACI code and per FHWA manuals. Design methods based on engineering publications or research papers needs to have prior approval from NCDOT. The Department reserves the right to accept or disapprove any method used for the analysis.

Use a Factor of Safety of 1.33 for torsion and 2.0 for bending for the foundation design.

Foundation design for lateral load shall not exceed 1" lateral deflection at top of foundation.

Design all custom foundations to carry the maximum capacity of each metal pole. For standard case strain poles only, if a custom foundation is designed, use the actual moment reactions from the Standard Foundation Selection Table shown on Standard Drawing No. M8.

To prevent design of oversized drilled shafts or other foundation types, do not use mast arm lengths exceeding 50'-0" and refrain from using dual mast arms, when installing new mast arm structures east of US Route 17.

When poor soil conditions are encountered which could create an excessively large foundation design, consideration may be given to allowing an exemption to the maximum capacity design. The contractor must gain approval from the engineer before reducing a foundation's capacity. On projects where poor soil is known to be present, it is advisable that the contractor consider getting foundations approved before releasing poles for fabrication.

Have the contractor notify the engineer if the proposed foundation is to be installed on a slope other than 8H: 1V or flatter.

A. Description:

Furnish and install foundations for NCDOT metal poles with all necessary hardware in accordance with the plans and specifications.

Metal Pole Standards have been developed and implemented by NCDOT for use at signalized intersections in North Carolina. If the plans call for a standard pole, then a standard foundation may be selected from the plans. However, the Contractor is not required to use a standard foundation. If the Contractor chooses to design a non-standard site-specific foundation for a standard pole or if the plans call for a non-standard site-specific pole, design the foundation to conform to the applicable provisions in the NCDOT Metal Pole Standards and Section B4 (Non-Standard Foundation Design) below. If non-standard site specific foundations are designed for standard QPL approved strain poles, the foundation designer must use the design moment specified by load case on Metal Pole Standard Drawing Sheet M8. Failure to conform to this requirement will be grounds for rejection of the design.

If the Contractor chooses to design a non-standard foundation for a standard pole and the soil test results indicate a standard foundation is feasible for the site, the Contractor will be paid the cost of the standard foundation (drilled pier and wing wall, if applicable). Any additional costs associated with a non-standard site-specific foundation including additional materials, labor and equipment will be considered incidental to the cost of the standard foundation. All costs for the non-standard foundation design will also be considered incidental to the cost of the standard foundation.

B. Soil Test and Foundation Determination:

1. General:

Drilled piers are reinforced concrete sections, cast-in-place against in situ, undisturbed material. Drilled piers are of straight shaft type and vertical.

Some standard drilled piers for supporting poles with mast arms may require wing walls to resist torsional rotation. Based upon this provision and the results of the required soil test, a drilled pier length and wing wall requirement may be determined and constructed in accordance with the plans.

For non-standard site-specific poles, the contractor-selected pole fabricator will determine if the addition of wing walls is necessary for the supporting foundations.

2. Soil Test:

Perform a soil test at each proposed metal pole location. Complete all required fill placement and excavation at each signal pole location to finished grade before drilling each boring. Soil tests performed that are not in compliance with this requirement may be rejected and will not be paid. Drill one boring to a depth of 26 feet within a 25 foot radius of each proposed foundation.

Perform standard penetration tests (SPT) in accordance with ASTM D 1586 at depths of 1, 2.5, 5, 7.5, 10, 15, 20 and 26 feet. Discontinue the boring if one of the following occurs:

- A total of 100 blows have been applied in any 2 consecutive 6-in. intervals.
- A total of 50 blows have been applied with < 3-in. penetration.

Describe each intersection as the "Intersection of *(Route or SR #)*, *(Street Name)* and *(Route or SR #)*, *(Street Name)*, _____ County, Signal Inventory No. _____". Label borings with "B- *N, S, E, W, NE, NW, SE or SW*" corresponding to the quadrant location within the intersection. Pole numbers should be made available to the Drill Contractor. Include pole numbers in the boring label if they are available. If they are not available, ensure the boring labels can be cross-referenced to corresponding pole numbers. For each boring, submit a legible (hand written or typed) boring log signed and sealed by a licensed Geologist or Professional Engineer registered in North Carolina. Include on each boring the SPT blow counts and N-values at each depth, depth of the boring, hammer efficiency and a general description of the soil types encountered.

3. Standard Foundation Determination:

Use the following method for determining the Design N-value:

$$N_{AVG} = \frac{(N@1' + N@2.5' + \ldots\ldots\ldots N@\text{Deepest Boring Depth})}{\text{Total Number of N-values}}$$

$$Y = (N@1')^2 + (N@2.5')^2 + \ldots\ldots\ldots (N@\text{Deepest Boring Depth})^2$$

$$Z = (N@1' + N@2.5' + \ldots\ldots\ldots N@\text{Deepest Boring Depth})$$

$$N_{STD\ DEV} = \left(\frac{(\text{Total Number of N-values} \times Y) - Z^2}{(\text{Total Number of N-values}) \times (\text{Total Number of N-values} - 1)} \right)^{0.5}$$

Design N-value equals lesser of the following two conditions:

$N_{AVG} - (N_{STD\ DEV} \times 0.45)$

Or

$$\text{Average of First Four N-Values} = \frac{(N@1' + N@2.5' + N@5' + N@7.5')}{4}$$

Note: If less than 4 N-values are obtained because of criteria listed in Section 2 above, use average of N-values collected for second condition. Do not include the N-value at the deepest boring depth for above calculations if the boring is discontinued at or before the required boring depth because of criteria listed in Section 2 above. Use N-value of zero for weight of hammer or weight of rod. If N-value is greater than 50, reduce N-value to 50 for calculations.

If standard NCDOT strain poles are shown on the plans and the Contractor chooses to use standard foundations, determine a drilled pier length, "L," for each signal pole from the Standard Foundations Chart (sheet M 8) based on the Design N-value and the predominant soil type. For each standard pole location, submit a completed "Metal Pole Standard Foundation Selection Form" signed by the Contractor's representative. Signature on form is for verification purposes only. Include the Design N-value calculation and resulting drilled pier length, "L," on each form.

If non-standard site-specific poles are shown on the plans, submit completed boring logs collected in accordance with Section 2 (Soil Test) above along with pole loading diagrams from the plans to the contractor-selected pole fabricator to assist in the pole and foundation design.

If one of the following occurs, the Standard Foundations Chart shown on the plans may not be used and a non-standard foundation may be required. In such case, contact the Engineer.

- The Design N-value is less than 4.
- The drilled pier length, "L", determined from the Standard Foundations Chart, is greater than the depth of the corresponding boring.

In the case where a standard foundation cannot be used, the Department will be responsible for the additional cost of the non-standard foundation.

Foundation designs are based on level ground around the traffic signal pole. If the slope around the edge of the drilled pier is steeper than 8:1 (H:V) or the proposed foundation will be less than 10 feet from the top of an embankment slope, the Contractor is responsible for providing slope information to the foundation designer and to the Engineer so it can be considered in the design.

The "Metal Pole Standard Foundation Selection Form" may be found at:

http://www.ncdot.gov/doh/preconstruct/highway/geotech/formdet/misc/MetalPole.pdf

If assistance is needed, contact the Engineer.

4. Non-Standard Foundation Design:

Design non-standard foundations based upon site-specific soil test information collected in accordance with Section 2 (Soil Test) above. Design drilled piers for side resistance only in accordance with Section 4.6 of the *AASHTO Standard Specifications for Highway Bridges*. Use the computer software LPILE version 5.0 or later manufactured by Ensoft, Inc. to analyze drilled piers. Use the computer software gINT version 8.0 or later manufactured by Bentley Systems, Inc. with the current NCDOT gINT library and data template to produce SPT boring logs. Provide a drilled pier foundation for each pole with a length and diameter that result in a horizontal lateral movement of less than 1 inch at the top of the pier and a horizontal rotational movement of less than 1 inch at the edge of the pier. Contact the Engineer for pole loading diagrams for standard poles to be used for non-standard foundation designs. Submit any non-standard foundation designs including drawings, calculations, and soil boring logs to the Engineer for review and approval before construction.

C. Drilled Pier Construction:

Construct drilled pier foundations in accordance with the *Foundations and Anchor Rod Assemblies for Metal Poles* provision.

4.4. POLE NUMBERING SYSTEM

Attach an identification tag to each pole shaft and mast arm section as shown on Metal Pole Standard Drawing Sheet M2 "Typical Fabrication Details Common To All Metal Poles".

4.5. MEASUREMENT AND PAYMENT

Actual number of metal strain signal poles (without regard to height or load capacity) furnished, installed and accepted.

Actual number of soil tests with SPT borings drilled furnished and accepted.

Actual volume of concrete poured in cubic yards of drilled pier foundation furnished, installed and accepted.

No measurement will be made for foundation designs prepared with metal pole designs, as these will be considered incidental to designing signal support structures.

Payment will be made under:

Metal Strain Signal Pole ..... Each
Soil Test ..... Each
Drilled Pier Foundation ..... Cubic Yard

5. CONTROLLERS WITH CABINETS

5.1. MATERIALS – TYPE 2070L CONTROLLERS

Conform to CALTRANS *Transportation Electrical Equipment Specifications* (TEES) (dated August 16, 2002, plus Errata 1 dated October 27, 2003 and Errata 2 dated June 08, 2004) except as required herein.

Furnish Model 2070L controllers. Ensure that removal of the CPU module from the controller will place the intersection into flash.

The Department will provide software at the beginning of the burning-in period. Contractor shall give 5 working days notice before needing software. Program software provided by the Department.

Provide model 2070L controllers with the latest version of OS9 operating software and device drivers, composed of the unit chassis and at a minimum the following modules and assemblies:

- MODEL 2070 1B, CPU Module, Single Board
- MODEL 2070-2A, Field I/O Module (FI/O)
  - Note: Configure the Field I/O Module to disable both the External WDT Shunt/Toggle Switch and SP3 (SP3 active indicator is "off")
- MODEL 2070-3B, Front Panel Module (FP), Display B (8x40)
- MODEL 2070-4A, Power Supply Module, 10 AMP
- MODEL 2070-7A, Async Serial Com Module (9-pin RS-232)

Furnish one additional MODEL 2070-7A, Async Serial Com Module (9-pin RS-232) for all master controller locations.

For each master location and central control center, furnish a U.S. Robotics V.92 or approved equivalent auto-dial/auto-answer external modem to accomplish the interface to the Department-furnished microcomputers. Include all necessary hardware to ensure telecommunications.

5.2. MATERIALS – GENERAL CABINETS

Provide a moisture resistant coating on all circuit boards.

Provide one 20 mm diameter radial lead UL-recognized metal oxide varistor (MOV) between each load switch field terminal and equipment ground. Electrical performance is outlined below.

PROPERTIES OF MOV SURGE PROTECTOR	
Maximum Continuous Applied Voltage at 185° F	150 VAC (RMS) 200 VDC
Maximum Peak 8x20μs Current at 185° F	6500 A
Maximum Energy Rating at 185° F	80 J
Voltage Range 1 mA DC Test at 77° F	212-268 V
Max. Clamping Voltage 8x20μs, 100A at 77° F	395 V
Typical Capacitance (1 MHz) at 77° F	1600 pF

Provide a power line surge protector that is a two-stage device that will allow connection of the radio frequency interference filter between the stages of the device. Ensure that a maximum continuous current is at least 10A at 120V. Ensure that the device can withstand a minimum of 20 peak surge current occurrences at 20,000A for an 8x20 microsecond waveform. Provide a maximum clamp voltage of 395V at 20,000A with a nominal series inductance of 200μh. Ensure that the voltage does not exceed 395V. Provide devices that comply with the following:

Frequency (Hz)	Minimum Insertion Loss (dB)
60	0
10,000	30
50,000	55
100,000	50
500,000	50
2,000,000	60
5,000,000	40
10,000,000	20
20,000,000	25

5.3. MATERIALS – TYPE 170E CABINETS

A. Type 170 E Cabinets General:

Conform to the city of Los Angeles' Specification No. 54-053-08, *Traffic Signal Cabinet Assembly Specification* (dated July 2008), except as required herein.

Furnish model 332 base mounted cabinets configured for 8 vehicle phases, 4 pedestrian phases, and 6 overlaps. When overlaps are required, provide auxiliary output files for the overlaps. Do not reassign load switches to accommodate overlaps unless shown on electrical details.

Provide model 200 load switches, model 222 loop detector sensors, model 252 AC isolators, and model 242 DC isolators according to the electrical details. As a minimum, provide one (1) model 2018 conflict monitor, one (1) model 206L power supply unit, two (2) model 204 flashers, one (1) DC isolator (located in slot I14), and four (4) model 430 flash transfer relays (provide seven (7) model 430 flash transfer relays if auxiliary output file is installed) with each cabinet.

B. Type 170 E Cabinet Electrical Requirements:

Provide a cabinet assembly designed to ensure that upon leaving any cabinet switch or conflict monitor initiated flashing operation, the controller starts up in the programmed start up phases and start up interval.

Furnish two sets of non-fading cabinet wiring diagrams and schematics in a paper envelope or container and placed in the cabinet drawer.

All AC+ power is subject to radio frequency signal suppression.

Provide surge suppression in the cabinet for each type of cabinet device. Provide surge protection for the full capacity of the cabinet input file. Provide surge suppression devices that operate properly over a temperature range of -40° F to +185° F. Ensure the surge suppression devices provide both common and differential modes of protection.

Provide a pluggable power line surge protector that is installed on the back of the PDA (power distribution assembly) chassis to filter and absorb power line noise and switching transients. Ensure

the device incorporates LEDs for failure indication and provides a dry relay contact closure for the purpose of remote sensing. Ensure the device meets the following specifications:

- Peak Surge Current (Single pulse, 8x20μs).....20,000A
- Occurrences (8x20μs waveform).....10 minimum @ 20,000A
- Maximum Clamp Voltage.....395VAC
- Operating Current.....15 amps
- Response Time.....< 5 nanoseconds

Provide a loop surge suppressor for each set of loop terminals in the cabinet. Ensure the device meets the following specifications:

- Peak Surge Current (6 times, 8x20μs)
  - (Differential Mode).....400A
  - (Common Mode).....1,000A
- Occurrences (8x20μs waveform).....500 min @ 200A
- Maximum Clamp Voltage
  - (Differential Mode @400A).....35V
  - (Common Mode @1,000A).....35V
- Response Time.....< 5 nanoseconds
- Maximum Capacitance.....35 pF

Provide a data communications surge suppressor for each communications line entering or leaving the cabinet. Ensure the device meets the following specifications:

- Peak Surge Current (Single pulse, 8x20μs).....10,000A
- Occurrences (8x20μs waveform).....100 min @ 2,000A
- Maximum Clamp Voltage.....Rated for equipment protected
- Response Time.....< 1 nanosecond
- Maximum Capacitance.....1,500 pF
- Maximum Series Resistance.....15Ω

Provide a DC signal surge suppressor for each DC input channel in the cabinet. Ensure the device meets the following specifications:

- Peak Surge Current (Single pulse, 8x20μs).....10,000A
- Occurrences (8x20μs waveform).....100 @ 2,000A
- Maximum Clamp Voltage.....30V
- Response Time.....< 1 nanosecond

Provide a 120 VAC signal surge suppressor for each AC+ interconnect signal input. Ensure the device meets the following specifications:

- Peak Surge Current (Single pulse, 8x20μs).....20,000A
- Maximum Clamp Voltage.....350VAC
- Response Time.....< 200 nanoseconds
- Discharge Voltage.....<200 Volts @ 1,000A
- Insulation Resistance.....≥100 MΩ

Provide conductors for surge protection wiring that are of sufficient size (ampacity) to withstand maximum overcurrents which could occur before protective device thresholds are attained and current flow is interrupted.

If additional surge protected power outlets are needed to accommodate fiber transceivers, modems, etc., install a UL listed, industrial, heavy-duty type power outlet strip with a minimum rating of 15 A / 125 VAC, 60 Hz. Provide a strip that has a minimum of 3 grounded outlets. Ensure the power outlet strip plugs into one of the controller unit receptacles located on the rear of the PDA. Ensure power outlet strip is mounted securely; provide strain relief if necessary.

Provide a door switch in the front and a door switch in the rear of the cabinet that will provide the controller unit with a Door Ajar alarm when either the front or the rear door is open. Ensure the door switches apply DC ground to the Input File when either the front door or the rear door is open.

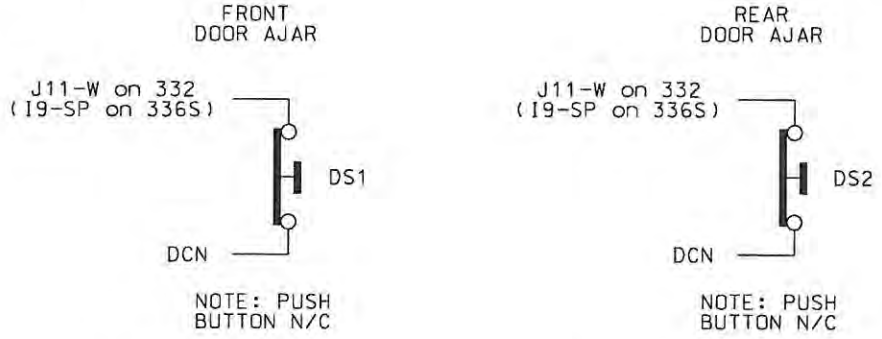

Furnish a fluorescent fixture in the rear across the top of the cabinet and another fluorescent fixture in the front across the top of the cabinet at a minimum. Ensure that the fixtures provide sufficient light to illuminate all terminals, labels, switches, and devices in the cabinet. Conveniently locate the fixtures so as not to interfere with a technician's ability to perform work on any devices or terminals in the cabinet. Provide a protective diffuser to cover exposed bulbs. Install 16 watt T-4 lamps in the fluorescent fixtures. Provide a door switch to provide power to each fixture when the respective door is open. Wire the fluorescent fixtures to the 15 amp ECB (equipment circuit breaker).

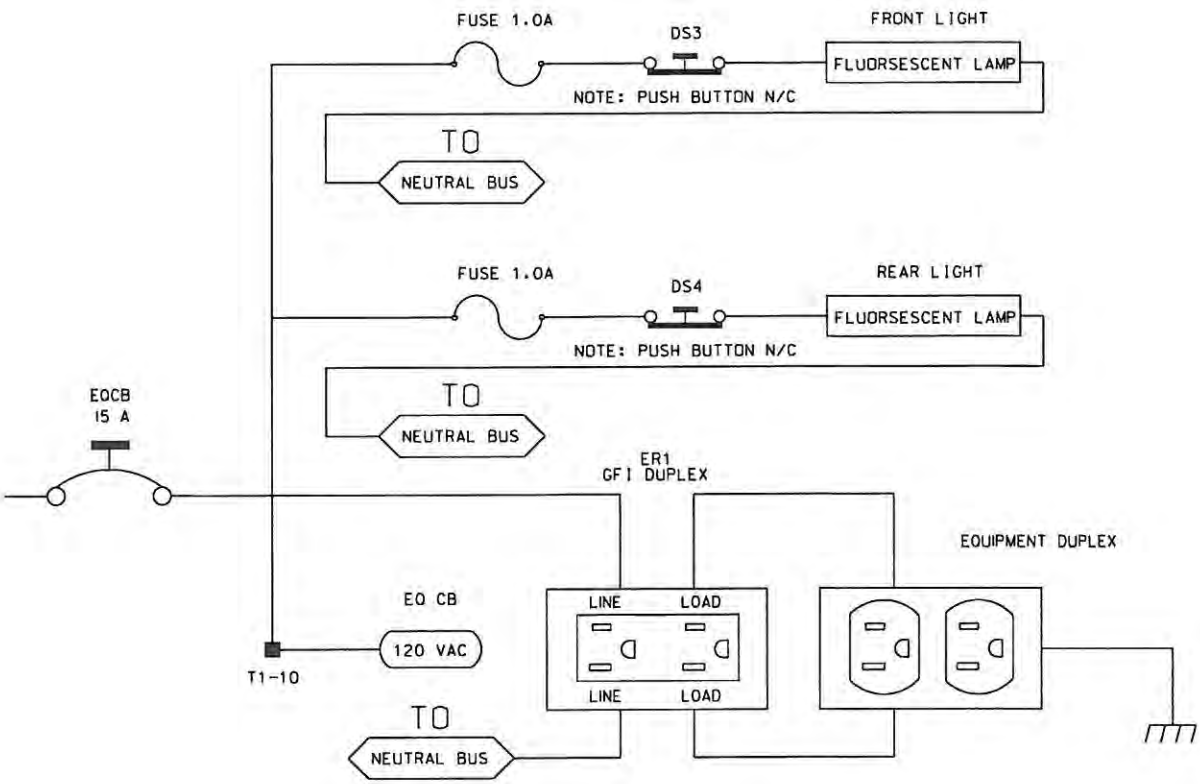

Furnish a police panel with a police panel door. For model 336S cabinets, mount the police panel on the rear door. Ensure that the police panel door permits access to the police panel when the main door is closed. Ensure that no rainwater can enter the cabinet even with the police panel door open. Provide a police panel door hinged on the right side as viewed from the front. Provide a police panel door lock that is keyed to a standard police/fire call box key. In addition to the requirements of LA Specification No. 54-053-08, provide the police panel with a toggle switch connected to switch the intersection operation between normal stop-and-go operation (AUTO) and manual operation (MANUAL). Ensure that manual control can be implemented using inputs and software such that the controller provides full programmed clearance times for the yellow clearance and red clearance for each phase while under manual control.

Provide a 1/4-inch locking phone jack in the police panel for a hand control to manually control the intersection. Provide sufficient room in the police panel for storage of a hand control and cord.

For model 332 base mounted cabinets, ensure terminals J14-E and J14-K are wired together on the rear of the Input File. Connect TB9-12 (J14 Common) on the Input Panel to T1-2 (AC-) on the rear of the PDA.

Provide detector test switches mounted at the top of the cabinet rack or other convenient location which may be used to place a call on each of eight phases based on the chart below. Provide three positions for each switch: On (place call), Off (normal detector operation), and Momentary On (place momentary call and return to normal detector operation after switch is released). Ensure that the switches are located such that the technician can read the controller display and observe the intersection.

Connect detector test switches for cabinets as follows:

332 Cabinet	
Detector Call Switches	**Terminals**
Phase 1	I1-W
Phase 2	I4-W
Phase 3	I5-W
Phase 4	I8-W
Phase 5	J1-W
Phase 6	J4-W
Phase 7	J5-W
Phase 8	J8-W

Provide the PCB 28/56 connector for the conflict monitor unit (CMU) with 28 independent contacts per side, dual-sided with 0.156 inch contact centers. Provide the PCB 28/56 connector contacts with solder eyelet terminations. Ensure all connections to the PCB 28/56 connector are soldered to the solder eyelet terminations.

Ensure that all cabinets have the CMU connector wired according to the 332 cabinet connector pin assignments (include all wires for auxiliary output file connection). Wire pins 13, 16, R, and U of the CMU connector to a separate 4 pin plug, P1, as shown below. Provide a second plug, P2, which will mate with P1 and is wired to the auxiliary output file as shown below. Provide an additional plug, P3, which will mate with P1 and is wired to the pedestrian yellow circuits as shown below. When no auxiliary output file is installed in the cabinet, provide wires for the green and yellow inputs for channels 11, 12, 17, and 18, the red inputs for channels 17 and 18, and the wires for the P2 plug. Terminate the two-foot wires with ring type lugs, insulated, and bundled for optional use.

	P1		P2		P3	
PIN	**FUNCTION**	**CONN TO**	**FUNCTION**	**CONN TO**	**FUNCTION**	**CONN TO**
1	CH-9G	CMU-13	OLA-GRN	A123	2P-YEL	114
2	CH-9Y	CMU-16	OLA-YEL	A122	4P-YEL	105
3	CH-10G	CMU-R	OLB-GRN	A126	6P-YEL	120
4	CH-10Y	CMU-U	OLB-YEL	A125	8P-YEL	111

Do not provide the P20 terminal assembly (red monitor board) or red interface ribbon cable as specified in LA Specification No. 54-053-08.

Provide a P20 connector that mates with and is compatible with the red interface connector mounted on the front of the conflict monitor. Ensure that the P20 connector and the red interface connector on the conflict monitor are center polarized to ensure proper connection. Ensure that

removal of the P20 connector will cause the conflict monitor to recognize a latching fault condition and place the cabinet into flashing operation.

Wire the P20 connector to the output file and auxiliary output file using 22 AWG stranded wires. Ensure the length of these wires is a minimum of 42 inches in length. Provide a durable braided sleeve around the wires to organize and protect the wires.

Wire the P20 connector to the traffic signal red displays to provide inputs to the conflict monitor as shown below. Ensure the pedestrian Don't Walk circuits are wired to channels 13 through 16 of the P20 connector. When no auxiliary output file is installed in the cabinet, provide wires for channels 9 through 12 reds. Provide a wire for special function 1. Terminate the unused wires with ring type lugs, insulated, and bundled for optional use.

	P20 Connector				
PIN	**FUNCTION**	**CONN TO**	**PIN**	**FUNCTION**	**CONN TO**
1	Channel 15 Red	119	2	Channel 16 Red	110
3	Channel 14 Red	104	4	Chassis GND	01-9
5	Channel 13 Red	113	6	N/C	
7	Channel 12 Red	AUX 101	8	Spec Function 1	
9	Channel 10 Red	AUX 124	10	Channel 11 Red	AUX 114
11	Channel 9 Red	AUX 121	12	Channel 8 Red	107
13	Channel 7 Red	122	14	Channel 6 Red	134
15	Channel 5 Red	131	16	Channel 4 Red	101
17	Channel 3 Red	116	18	Channel 2 Red	128
19	Channel 1 Red	125	20	Red Enable	01-14

Ensure the controller unit outputs to the auxiliary output file are pre-wired to the C5 connector. When no auxiliary output file is installed in the cabinet, connect the C5 connector to a storage socket located on the Input Panel or on the rear of the PDA.

Do not wire pin 12 of the load switch sockets.

In addition to the requirements of LA Specification No. 54-053-08, ensure relay K1 on the Power Distribution Assembly (PDA) is a four pole relay and K2 on the PDA is a two pole relay.

Provide a two pole, ganged circuit breaker for the flash bus circuit. Ensure the flash bus circuit breaker is an inverse time circuit breaker rated for 10 amps at 120 VAC with a minimum of 10,000 RMS symmetrical amperes short circuit current rating. Do not provide the auxiliary switch feature on the flash bus circuit breaker. Ensure the ganged flash bus circuit breaker is certified by the circuit breaker manufacturer to provide gang tripping operation.

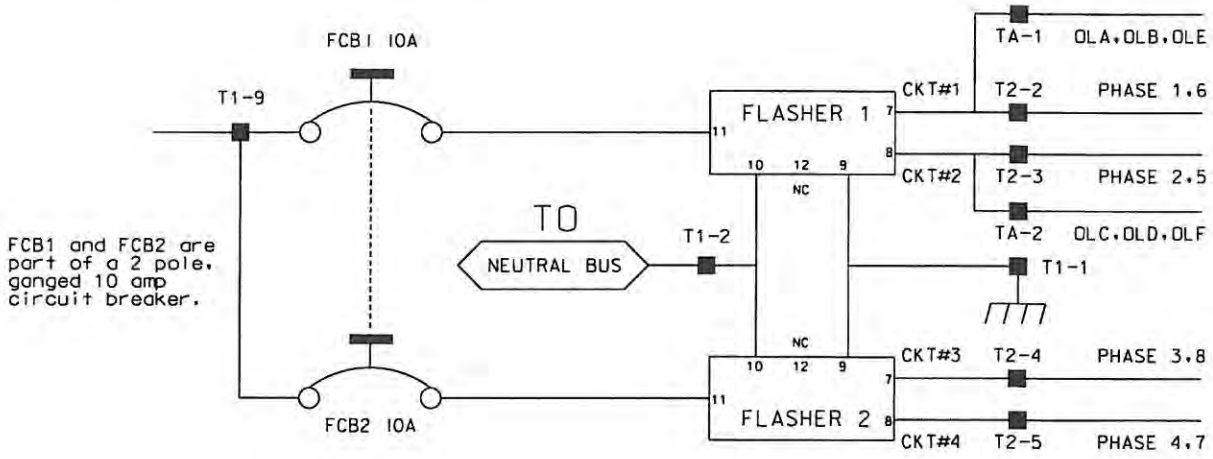

Ensure auxiliary output files are wired as follows:

AUXILIARY OUTPUT FILE TERMINAL BLOCK TA ASSIGNMENTS	
POSITION	**FUNCTION**
1	Flasher Unit #1, Circuit 1/FTR1 (OLA, OLB)/FTR3 (OLE)
2	Flasher Unit #1, Circuit 2/FTR2 (OLC, OLD)/FTR3 (OLF)
3	Flash Transfer Relay Coils
4	AC -
5	Power Circuit 5
6	Power Circuit 5
7	Equipment Ground Bus
8	NC

Provide four spare load resistors mounted in each cabinet. Ensure each load resistor is rated as shown in the table below. Wire one side of each load resistor to AC-. Connect the other side of each resistor to a separate terminal on a four (4) position terminal block. Mount the load resistors and terminal block either inside the back of Output File No. 1 or on the upper area of the Service Panel.

ACCEPTABLE LOAD RESISTOR VALUES	
VALUE (ohms)	**WATTAGE**
1.5K – 1.9 K	25W (min)
2.0K – 3.0K	10W (min)

Provide Model 200 load switches, Model 204 flashers, Model 242 DC isolators, Model 252 AC isolators, and Model 206L power supply units that conform to CALTRANS' "*Transportation Electrical Equipment Specifications*" dated March 12, 2009 with Erratum 1.

C. Type 170 E Cabinet Physical Requirements:

Do not mold, cast, or scribe the name "City of Los Angeles" on the outside of the cabinet door as specified in LA Specification No. 54-053-08. Do not provide a Communications Terminal Panel as specified in LA Specification No. 54-053-08. Do not provide terminal block TBB on the Service Panel. Do not provide Cabinet Verification Test Program software or associated test jigs as specified in LA Specification No. 54-053-08.

Furnish unpainted, natural, aluminum cabinet shells. Ensure that all non-aluminum hardware on the cabinet is stainless steel or a Department approved non-corrosive alternate.

Ensure the lifting eyes, gasket channels, police panel, and all supports welded to the enclosure and doors are fabricated from 0.125 inch minimum thickness aluminum sheet and meet the same standards as the cabinet and doors.

Provide front and rear doors with latching handles that allow padlocking in the closed position. Furnish 0.75 inch minimum diameter stainless steel handles with a minimum 0.5 inch shank. Place the padlocking attachment at 4.0 inches from the handle shank center to clear the lock and key. Provide an additional 4.0 inches minimum gripping length.

Provide Corbin #2 locks on the front and rear doors. Provide one (1) Corbin #2 and one (1) police master key with each cabinet. Ensure main door locks allow removal of keys in the locked position only.

Provide a surge protection panel with 16 loop surge protection devices and designed to allow sufficient free space for wire connection/disconnection and surge protection device replacement. For model 332 cabinets, provide an additional 20 loop surge protection devices. Provide an additional two AC+ interconnect surge devices to protect one slot and eight DC surge protection devices to protect four slots. Provide no protection devices on slot I14.

For base mounted cabinets, mount surge protection panels on the left side of the cabinet as viewed from the rear. Attach each panel to the cabinet rack assembly using bolts and make it easily removable. Mount the surge protection devices in vertical rows on each panel and connect the devices to one side of 12 position, double row terminal blocks with #8 screws. For each surge protection panel, terminate all grounds from the surge protection devices on a copper equipment ground bus attached to the surge protection panel. Wire the terminals to the rear of a standard input file using spade lugs for input file protection.

Provide permanent labels that indicate the slot and the pins connected to each terminal that may be viewed from the rear cabinet door. Label and orient terminals so that each pair of inputs is next to

each other. Indicate on the labeling the input file (I or J), the slot number (1-14) and the terminal pins of the input slots (either D & E for upper or J & K for lower).

Provide a minimum 14 x 16 inch pull out, hinged top shelf located immediately below controller mounting section of the cabinet. Ensure the shelf is designed to fully expose the table surface outside the controller at a height approximately even with the bottom of the controller. Ensure the shelf has a storage bin interior which is a minimum of 1 inch deep and approximately the same dimensions as the shelf. Provide an access to the storage area by lifting the hinged top of the shelf. Fabricate the shelf and slide from aluminum or stainless steel and ensure the assembly can support the 2070L controller plus 15 pounds of additional weight. Ensure shelf has a locking mechanism to secure it in the fully extended position and does not inhibit the removal of the 2070L controller or removal of cards inside the controller when fully extended. Provide a locking mechanism that is easily released when the shelf is to be returned to its non-use position directly under the controller.

D. Model 2018 Enhanced Conflict Monitor:

Furnish Model 2018 Enhanced Conflict Monitors that provide monitoring of 18 channels. Ensure each channel consists of a green, yellow, and red field signal input. Ensure that the conflict monitor meets or exceeds CALTRANS' Transportation Electrical Equipment Specifications dated March 12, 2009 with Erratum 1 (hereafter referred to as CALTRANS' 2009 TEES) for a model 210 monitor unit and other requirements stated in this specification.

Ensure the conflict monitor is provided with an 18 channel conflict programming card. Pin EE and Pin T of the conflict programming card shall be connected together. Pin 16 of the conflict programming card shall be floating. Ensure that the absence of the conflict programming card will cause the conflict monitor to trigger (enter into fault mode), and remain in the triggered state until the programming card is properly inserted and the conflict monitor is reset.

Provide a conflict monitor that incorporates LED indicators into the front panel to dynamically display the status of the monitor under normal conditions and to provide a comprehensive review of field inputs with monitor status under fault conditions. Ensure that the monitor indicates the channels that were active during a conflict condition and the channels that experienced a failure for all other per channel fault conditions detected. Ensure that these indications and the status of each channel are retained until the Conflict Monitor is reset. Furnish LED indicators for the following:

- AC Power (Green LED indicator)
- VDC Failed (Red LED indicator)
- WDT Error (Red LED indicator)
- Conflict (Red LED indicator)
- Red Fail (Red LED indicator)
- Dual Indication (Red LED indicator)
- Yellow/Clearance Failure (Red LED indicator)
- PCA/PC Ajar (Red LED indicator)
- Monitor Fail/Diagnostic Failure (Red LED indicator)
- 54 Channel Status Indicators (1 Red, 1 Yellow, and 1 Green LED indicator for each of the 18 channels)

Provide a switch to set the Red Fail fault timing. Ensure that when the switch is in the ON position the Red Fail fault timing value is set to 1350 +/- 150ms (2018 mode). Ensure that when the switch is in the OFF position the Red Fail fault timing value is set to 850 +/- 150ms (210 mode).

Provide a switch to set the Watchdog fault timing. Ensure that when the switch is in the ON position the Watchdog fault timing value is set to 1.0 +/- 0.1s (2018 mode). Ensure that when the switch is in the OFF position the Watchdog fault timing value is set to 1.5 +/- 0.1s (210 mode).

Provide a jumper or switch to set the AC line brown-out levels. Ensure that when the jumper is present or the switch is in the ON position the AC line dropout voltage threshold is 98 +/- 2 Vrms, the AC line restore voltage threshold is 103 +/- 2 Vrms, and the AC line brown-out timing value is set to 400 +/- 50ms (2018 mode). Ensure that when the jumper is not present or the switch is in the OFF position the AC line dropout voltage threshold is 92 +/- 2 Vrms, the AC line restore voltage threshold is 98 +/- 2 Vrms, and the AC line brown-out timing value is set to 80 +/- 17ms (210 mode).

Provide a jumper or switch that will enable and disable the Watchdog Latch function. Ensure that when the jumper is not present or the switch is in the OFF position the Watchdog Latch function is disabled. In this mode of operation, a Watchdog fault will be reset following a power loss, brownout, or power interruption. Ensure that when the jumper is present or the switch is in the ON position the Watchdog Latch function is enabled. In this mode of operation, a Watchdog fault will be retained until a Reset command is issued.

Provide a jumper that will reverse the active polarity for pin #EE (output relay common). Ensure that when the jumper is not present pin #EE (output relay common) will be considered 'Active' at a voltage greater than 70 Vrms and 'Not Active' at a voltage less than 50 Vrms (Caltrans mode). Ensure that when the jumper is present pin #EE (output relay common) will be considered 'Active' at a voltage less than 50 Vrms and 'Not Active' at a voltage greater than 70 Vrms (Failsafe mode).

In addition to the connectors required by CALTRANS' 2009 TEES, provide the conflict monitor with a red interface connector mounted on the front of the monitor. Ensure the connector is a 20 pin, right angle, center polarized, male connector with latching clip locks and polarizing keys. Ensure the right angle solder tails are designed for a 0.062" thick printed circuit board. Keying of the connector shall be between pins 3 and 5, and between 17 and 19. Ensure the connector has two rows of pins with the odd numbered pins on one row and the even pins on the other row. Ensure the connector pin row spacing is 0.10" and pitch is 0.10". Ensure the mating length of the connector pins is 0.24". Ensure the pins are finished with gold plating 30μ" thick.

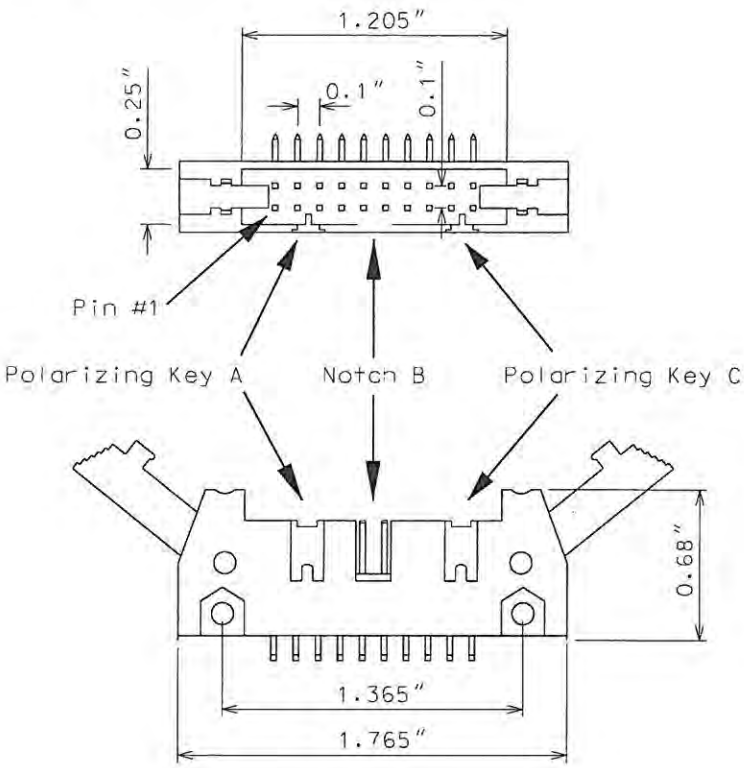

Ensure the red interface connector pins on the monitor have the following functions:

Pin #	Function	Pin #	Function
1	Channel 15 Red	2	Channel 16 Red
3	Channel 14 Red	4	Chassis Ground
5	Channel 13 Red	6	Special Function 2
7	Channel 12 Red	8	Special Function 1
9	Channel 10 Red	10	Channel 11 Red
11	Channel 9 Red	12	Channel 8 Red
13	Channel 7 Red	14	Channel 6 Red
15	Channel 5 Red	16	Channel 4 Red
17	Channel 3 Red	18	Channel 2 Red
19	Channel 1 Red	20	Red Enable

Ensure that removal of the P20 cable connector will cause the conflict monitor to recognize a latching fault condition and place the cabinet into flashing operation.

Provide Special Function 1 and Special Function 2 inputs to the unit which shall disable only Red Fail Monitoring when either input is sensed active. A Special Function input shall be sensed active when the input voltage exceeds 70 Vrms with a minimum duration of 550 ms. A Special Function input shall be sensed not active when the input voltage is less than 50 Vrms or the duration is less

than 250 ms. A Special Function input is undefined by these specifications and may or may not be sensed active when the input voltage is between 50 Vrms and 70 Vrms or the duration is between 250 ms and 550 ms.

Ensure the conflict monitor recognizes field signal inputs for each channel that meet the following requirements:

- consider a Red input greater than 70 Vrms and with a duration of at least 500 ms as an "on" condition;
- consider a Red input less than 50 Vrms or with a duration of less than 200 ms as an "off" condition (no valid signal);
- consider a Red input between 50 Vrms and 70 Vrms or with a duration between 200 ms and 500 ms to be undefined by these specifications;
- consider a Green or Yellow input greater than 25 Vrms and with a duration of at least 500 ms as an "on" condition;
- consider a Green or Yellow input less than 15 Vrms or with a duration of less than 200 ms as an "off" condition; and
- consider a Green or Yellow input between 15 Vrms and 25 Vrms or with a duration between 200 ms and 500 ms to be undefined by these specifications.

Provide a conflict monitor that recognizes the faults specified by CALTRANS' 2009 TEES and the following additional faults. Ensure the conflict monitor will trigger upon detection of a fault and will remain in the triggered (in fault mode) state until the unit is reset at the front panel or through the external remote reset input for the following failures:

1. **Red Monitoring or Absence of Any Indication (Red Failure):** A condition in which no "on" voltage signal is detected on any of the green, yellow, or red inputs to a given monitor channel. If a signal is not detected on at least one input (R, Y, or G) of a conflict monitor channel for a period greater than 1000 ms when used with a 170 controller and 1500 ms when used with a 2070L controller, ensure monitor will trigger and put the intersection into flash. If the absence of any indication condition lasts less that 750 ms when used with a 170 controller and 1200 ms when used with a 2070L controller, ensure conflict monitor will not trigger. Red fail monitoring shall be enabled on a per channel basis by the use of switches located on the conflict monitor. Have red monitoring occur when all of the following input conditions are in effect:

   a) Red Enable input to monitor is active (Red Enable voltages are "on" at greater than 70 Vrms, off at less than 50 Vrms, undefined between 50 and 70 Vrms), and

   b) Neither Special Function 1 nor Special Function 2 inputs are active.

   c) Pin #EE (output relay common) is not active

2. **Short/Missing Yellow Indication Fault (Clearance Error):** Yellow indication following a green is missing or shorter than 2.7 seconds (with ± 0.1-second accuracy). If a channel fails to detect an "on" signal at the Yellow input for a minimum of 2.7 seconds (± 0.1 second) following the detection of an "on" signal at a Green input for that channel, ensure that the monitor triggers and generates a clearance/short yellow error fault indication. Short/missing yellow (clearance) monitoring shall be enabled on a per channel basis by the use of switches

located on the conflict monitor. This fault shall not occur when the channel is programmed for Yellow Inhibit, when the Red Enable signal is inactive or pin #EE (output relay common) is active.

3. **Dual Indications on the Same Channel:** In this condition, more than one indication (R,Y,G) is detected as "on" at the same time on the same channel. If dual indications are detected for a period greater than 500 ms, ensure that the conflict monitor triggers and displays the proper failure indication (Dual Ind fault). If this condition is detected for less than 200 ms, ensure that the monitor does not trigger. G-Y-R dual indication monitoring shall be enabled on a per channel basis by the use of switches located on the conflict monitor. G-Y dual indication monitoring shall be enabled for all channels by use of a switch located on the conflict monitor. This fault shall not occur when the Red Enable signal is inactive or pin #EE (output relay common) is active.
4. **Configuration Settings Change:** The configuration settings are comprised of (as a minimum) the permissive diode matrix, dual indication switches, yellow disable jumpers, any option switches, any option jumpers, and the Watchdog Enable switch. Ensure the conflict monitor compares the current configuration settings with the previous stored configuration settings on power-up, on reset, and periodically during operation. If any of the configuration settings are changed, ensure that the conflict monitor triggers and causes the program card indicator to flash. Ensure that configuration change faults are only reset by depressing and holding the front panel reset button for a minimum of three seconds. Ensure the external remote reset input does not reset configuration change faults.

Ensure the conflict monitor will trigger and the AC Power indicator will flash at a rate of 2 Hz ± 20% with a 50% duty cycle when the AC Line voltage falls below the "drop-out" level. Ensure the conflict monitor will resume normal operation when the AC Line voltage returns above the "restore" level. Ensure the AC Power indicator will remain illuminated when the AC voltage returns above the "restore" level. Should an AC Line power interruption occur while the monitor is in the fault mode, then upon restoration of AC Line power, the monitor will remain in the fault mode and the correct fault and channel indicators will be displayed.

Provide a flash interval of at least 6 seconds and at most 10 seconds in duration following a power-up, an AC Line interruption, or a brownout restore. Ensure the conflict monitor will suspend all fault monitoring functions, close the Output relay contacts, and flash the AC indicator at a rate of 4 Hz ± 20% with a 50% duty cycle during this interval. Ensure the termination of the flash interval after at least 6 seconds if the Watchdog input has made 5 transitions between the True and False state and the AC Line voltage is greater than the "restore" level. If the watchdog input has not made 5 transitions between the True and False state within 10 ± 0.5 seconds, the monitor shall enter a WDT error fault condition.

Ensure the conflict monitor will monitor an intersection with a minimum of four approaches using the four-section Flashing Yellow Arrow (FYA) vehicle traffic signal as outlined by the NCHRP 3-54 research project for protected-permissive left turn signal displays. Ensure the conflict monitor will operate in the FYA mode and FYAc (Compact) mode as specified below to monitor each channel for the following fault conditions: Conflict, Red Fail, Dual Indication, and Clearance. Provide a switch to select between the FYA mode and FYAc mode. Provide a switch to select each FYA phase movement for monitoring.

FYA mode

FYA Signal Head	Phase 1	Phase 3	Phase 5	Phase 7
Red Arrow	Channel 9 Red	Channel 10 Red	Channel 11 Red	Channel 12 Red
Yellow Arrow	Channel 9 Yellow	Channel 10 Yellow	Channel 11 Yellow	Channel 12 Yellow
Flashing Yellow Arrow	Channel 9 Green	Channel 10 Green	Channel 11 Green	Channel 12 Green
Green Arrow	Channel 1 Green	Channel 3 Green	Channel 5 Green	Channel 7 Green

FYAc mode

FYA Signal Head	Phase 1	Phase 3	Phase 5	Phase 7
Red Arrow	Channel 1 Red	Channel 3 Red	Channel 5 Red	Channel 7 Red
Yellow Arrow	Channel 1 Yellow	Channel 3 Yellow	Channel 5 Yellow	Channel 7 Yellow
Flashing Yellow Arrow	Channel 1 Green	Channel 3 Green	Channel 5 Green	Channel 7 Green
Green Arrow	Channel 9 Green	Channel 9 Yellow	Channel 10 Green	Channel 10 Yellow

Ensure that the conflict monitor will log at least nine of the most recent events detected by the monitor in non-volatile EEPROM memory (or equivalent). For each event, record at a minimum the time, date, type of event, status of each field signal indication with RMS voltage, and specific channels involved with the event. Ensure the conflict monitor will log the following events: monitor reset, configuration, previous fault, and AC line. Furnish the signal sequence log that shows all channel states (Greens, Yellows, and Reds) and the Red Enable State for a minimum of 2 seconds prior to the current fault trigger point. Ensure the display resolution of the inputs for the signal sequence log is not greater than 50 ms.

Provide a RS-232C/D compliant port (DB-9 female connector) on the front panel of the conflict monitor in order to provide communications from the conflict monitor to the 170/2070L controller or to a Department-furnished laptop computer. Electrically isolate the port interface electronics from all monitor electronics, excluding Chassis Ground. Ensure that the controller can receive all event log information through a controller Asynchronous Communications Interface Adapter (Type 170E) or Async Serial Comm Module (2070L). Provide a Windows based graphic user interface software to communicate directly through the same monitor RS-232C/D compliant port to retrieve and view

all event log information to a Department-furnished laptop computer. The RS-232C/D compliant port on the monitor shall allow the monitor to function as a DCE device with pin connections as follows:

Conflict Monitor RS-232C/D (DB-9 Female) Pinout		
Pin Number	**Function**	**I/O**
1	DCD	O
2	TX Data	O
3	RX Data	I
4	DTR	I
5	Ground	-
6	DSR	O
7	CTS	I
8	RTS	O
9	NC	-

MONITOR BOARD EDGE CONNECTOR

Pin #	Function (Back Side)	Pin #	Function (Component Side)
1	Channel 2 Green	A	Channel 2 Yellow
2	Channel 13 Green	B	Channel 6 Green
3	Channel 6 Yellow	C	Channel 15 Green
4	Channel 4 Green	D	Channel 4 Yellow
5	Channel 14 Green	E	Channel 8 Green
6	Channel 8 Yellow	F	Channel 16 Green
7	Channel 5 Green	H	Channel 5 Yellow
8	Channel 13 Yellow	J	Channel 1 Green
9	Channel 1 Yellow	K	Channel 15 Yellow
10	Channel 7 Green	L	Channel 7 Yellow
11	Channel 14 Yellow	M	Channel 3 Green
12	Channel 3 Yellow	N	Channel 16 Yellow
13	Channel 9 Green	P	Channel 17 Yellow
14	Channel 17 Green	R	Channel 10 Green
15	Channel 11 Yellow	S	Channel 11 Green
16	Channel 9 Yellow	T	Channel 18 Yellow
17	Channel 18 Green	U	Channel 10 Yellow
--		--	
18	Channel 12 Yellow	V	Channel 12 Green
19	Channel 17 Red	W	Channel 18 Red
20	Chassis Ground	X	Not Assigned
21	AC-	Y	DC Common
22	Watchdog Timer	Z	External Test Reset
23	+24VDC	AA	+24VDC
24	Tied to Pin 25	BB	Stop Time (Output)
25	Tied to Pin 24	CC	Not Assigned
26	Not Assigned	DD	Not Assigned
27	Relay Output, Side #3, N.O.	EE	Relay Output,Side #2,Common
28	Relay Output, Side #1, N.C.	FF	AC+

-- Slotted for keying between Pins 17/U and 18/V

CONFLICT PROGRAM CARD PIN ASSIGNMENTS

Pin #	Function (Back Side)	Pin #	Function (Component Side)
1	Channel 2 Green	A	Channel 1 Green
2	Channel 3 Green	B	Channel 2 Green
3	Channel 4 Green	C	Channel 3 Green
4	Channel 5 Green	D	Channel 4 Green
5	Channel 6 Green	E	Channel 5 Green
6	Channel 7 Green	F	Channel 6 Green
7	Channel 8 Green	H	Channel 7 Green
8	Channel 9 Green	J	Channel 8 Green
9	Channel 10 Green	K	Channel 9 Green
10	Channel 11 Green	L	Channel 10 Green
11	Channel 12 Green	M	Channel 11 Green
12	Channel 13 Green	N	Channel 12 Green
13	Channel 14 Green	P	Channel 13 Green
14	Channel 15 Green	R	Channel 14 Green
15	Channel 16 Green	S	Channel 15 Green
16	N/C	T	PC AJAR
17	Channel 1 Yellow	U	Channel 9 Yellow
18	Channel 2 Yellow	V	Channel 10 Yellow
19	Channel 3 Yellow	W	Channel 11 Yellow
20	Channel 4 Yellow	X	Channel 12 Yellow
21	Channel 5 Yellow	Y	Channel 13 Yellow
22	Channel 6 Yellow	Z	Channel 14 Yellow
23	Channel 7 Yellow	AA	Channel 15 Yellow
24	Channel 8 Yellow	BB	Channel 16 Yellow
--		--	
25	Channel 17 Green	CC	Channel 17 Yellow
26	Channel 18 Green	DD	Channel 18 Yellow
27	Channel 16 Green	EE	PC AJAR (Program Card)
28	Yellow Inhibit Common	FF	Channel 17 Green

-- Slotted for keying between Pins 24/BB and 25/CC

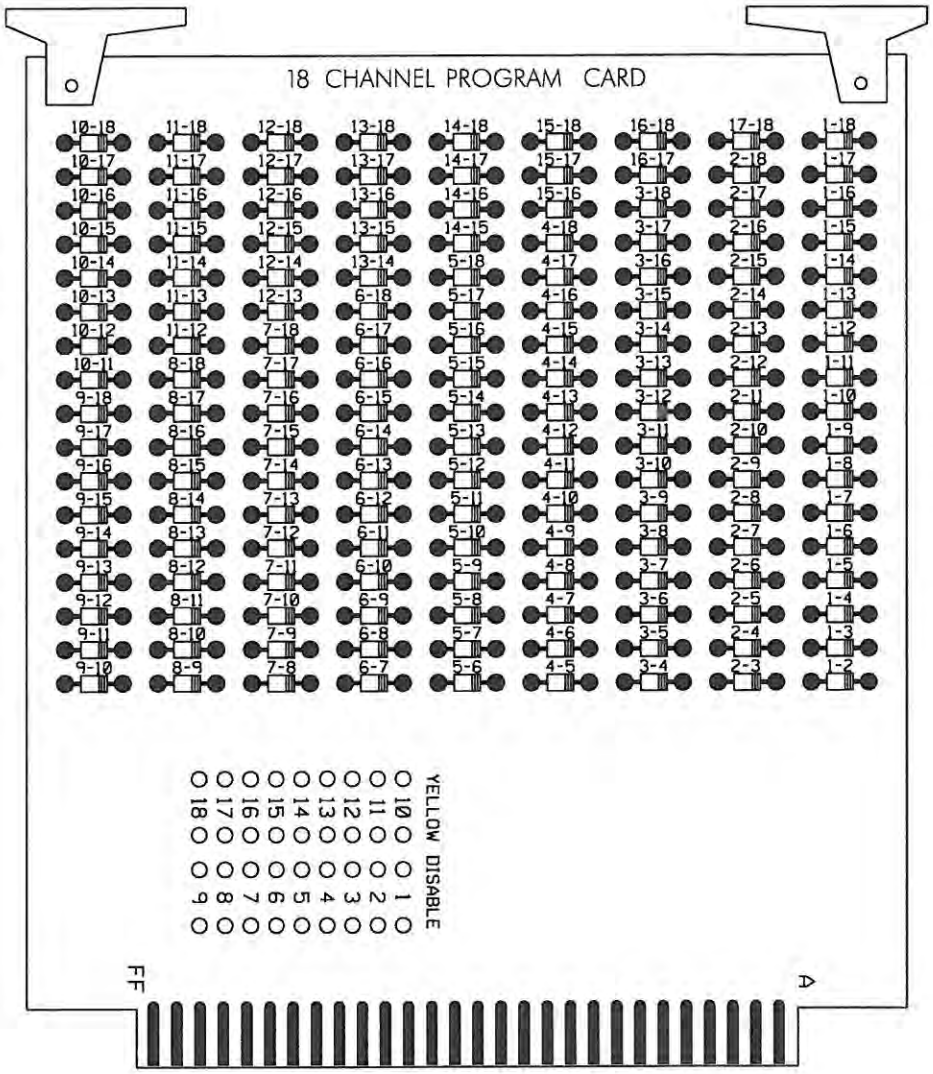

5.4. MATERIALS – TYPE 170 DETECTOR SENSOR UNITS

Furnish detector sensor units that comply with Chapter 5 Section 1, "General Requirements," and Chapter 5 Section 2, "Model 222 & 224 Loop Detector Sensor Unit Requirements," of the CALTRANS "Transportation Electrical Equipment Specifications" dated March 12, 2009 with Erratum 1.

5.5. MATERIALS – TYPE 2070E CONTROLLERS

Conform to CALTRANS *Transportation Electrical Equipment Specifications* (TEES) (dated March 12, 2009, plus Errata 1 dated January 21, 2010) except as required herein.

Furnish Model 2070E controllers. Ensure that removal of the CPU module from the controller will place the intersection into flash.

The Department will provide software at the beginning of the burning-in period. Contractor shall give 5 working days notice before needing software. Program software provided by the Department.

Provide Model 2070E controllers with the latest version of OS9 operating software and device drivers, composed of the unit chassis and at a minimum the following modules and assemblies:

- MODEL 2070-1E, CPU Module, Single Board, with 8Mb Datakey (blue in color)
- MODEL 2070-2A or approved MODEL 2070-2E, Field I/O Module (FI/O)
  - Note: Configure the Field I/O Module to disable both the External WDT Shunt/Toggle Switch and SP3 (SP3 active indicator is "off")
- MODEL 2070-3B, Front Panel Module (FP), Display B (8x40)
- MODEL 2070-4, Power Supply Module, 10 AMP
- MODEL 2070-7A, Async Serial Com Module (9-pin RS-232)

Furnish one additional MODEL 2070-7A, Async Serial Com Module (9-pin RS-232) for all master controller locations.

For each master location and central control center, furnish a U.S. Robotics V.92 or approved equivalent auto-dial/auto-answer external modem to accomplish the interface to the Department-furnished microcomputers. Include all necessary hardware to ensure telecommunications.

ITS and Signals Unit
Engineer's Estimate

TIP NO. :	SR-5001BX
COUNTY :	Wake
TYPE OF WORK :	TRAFFIC SIGNAL PAY ITEMS
LOCATION :	SR 3109 (Brier Creek Pkwy) at Arnold Palmer Dr./ Vogel St.

ITEM NUMBER	SECTION	UNITS	DESCRIPTION	05-1864	ITS	TOTAL
7048500000-E	1705	EA	PEDESTRIAN SIGNAL HEAD (16", 1 SECTION WITH COUNTDOWN)	8		**8**
7060000000-E	1705	LF	SIGNAL CABLE	3600		**3600**
7120000000-E	1705	EA	VEHICLE SIGNAL HEAD (12", 3 SECTION)	8		**8**
7132000000-E	1705	EA	VEHICLE SIGNAL HEAD (12", 4 SECTION)	2		**2**
7144000000-E	1705	EA	VEHICLE SIGNAL HEAD (12", 5 SECTION)	2		**2**
7264000000-E	1710	LF	MESSENGER CABLE (3/8")	700		**700**
7279000000-E	1715	LF	TRACER WIRE		50	**50**
7300000000-E	1715	LF	UNPAVED TRENCHING (1 conduit, 2 inch)	750	50	**800**
7300000000-E	1715	LF	UNPAVED TRENCHING (2 conduits, 2 inch)	50		**50**
7301000000-E	1715	LF	DIRECTIONAL DRILL (1 conduit, 2 inch)	150		**150**
7324000000-N	1716	EA	JUNCTION BOX (STANDARD SIZE)	18		**18**
7396000000-E	1722	EA	1/2" RISER WITH WEATHERHEAD	4		**4**
7408000000-E	1722	EA	1" RISER WITH WEATHERHEAD	1		**1**
7420000000-E	1722	EA	2" RISER WITH WEATHERHEAD	5		**5**
7444000000-E	1725	LF	INDUCTIVE LOOP SAWCUT	1425		**1425**
7456000000-E	1726	LF	LEAD-IN CABLE (14-2)	6750		**6750**
7540000000-N	1731	EA	SPLICE ENCLOSURE		1	**1**
7576000000-N	SP	EA	METAL STRAIN SIGNAL POLE	4		**4**
7613000000-N	SP	EA	SOIL TEST	4		**4**
7614100000-E	SP	CY	DRILLED PIER FOUNDATION	32		**32**
7630000000-N	SP	EA	METAL STRAIN POLE DESIGN	4		**4**
7636000000-N	1745	EA	SIGN FOR SIGNALS	4		**4**
7642100000-N	1743	EA	TYPE I POST WITH FOUNDATION	2		**2**
7642200000-N	1743	EA	TYPE II PEDESTAL WITH FOUNDATION	6		**6**
7684000000-N	1750	EA	SIGNAL CABINET FOUNDATION	1		**1**
7756000000-N	1751	EA	CONTROLLER WITH CABINET (TYPE 2070L, BASE MOUNTED)	1		**1**
7780000000-N	1751	EA	DETECTOR CARD (TYPE 2070L)	8		**8**
7901000000-N	1753	EA	CABINET BASE EXTENDER	1		**1**
7980000000-N	SP	EA	GENERIC SIGNAL ITEM (DROP CABLE ASSEMBLY)	1		**1**