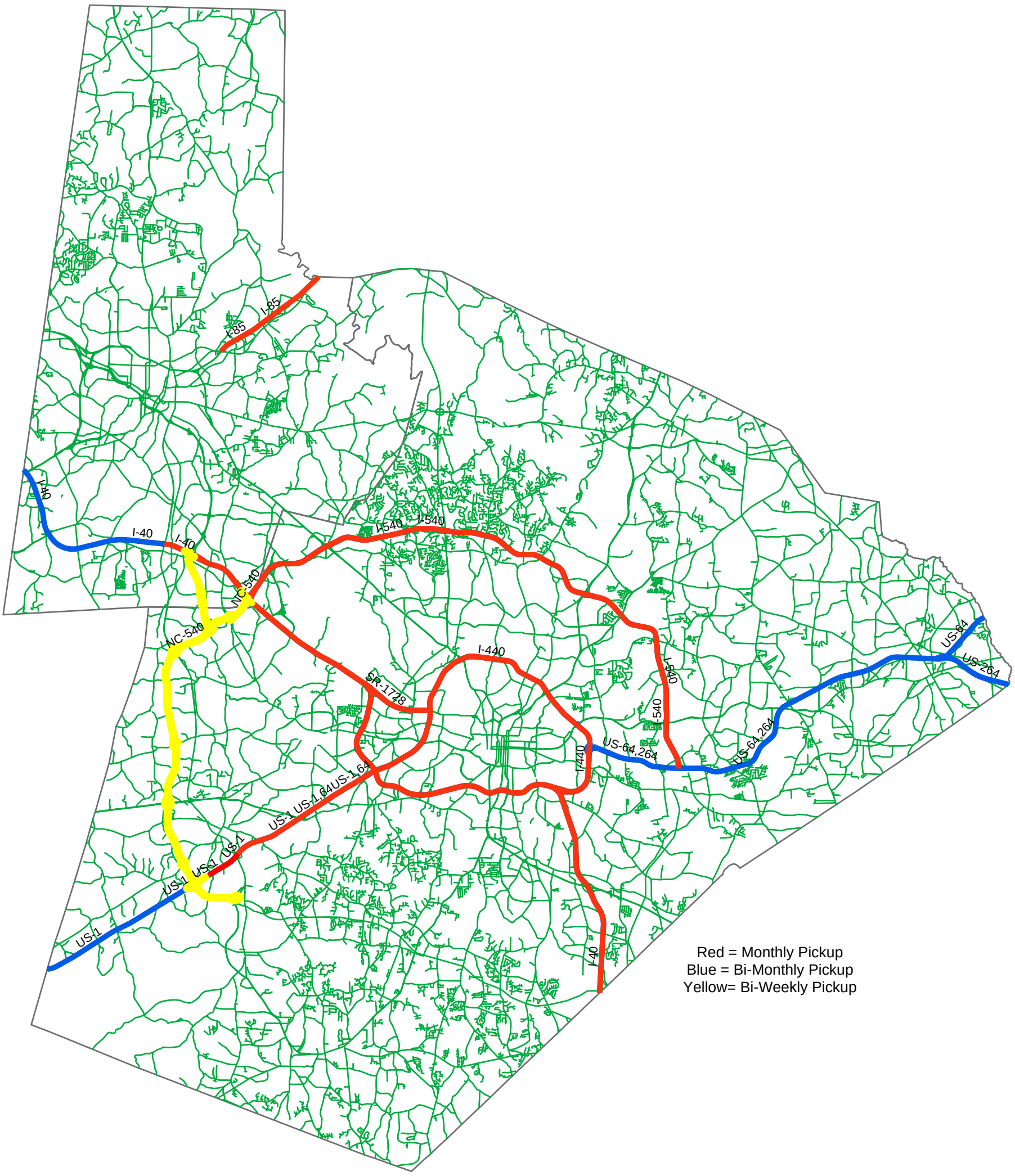
I-85
I-85
I-40
I-40
I-40
I-540
I-540
NC-540
NC-540
I-440
SR-1748
I-540
I-540
I-440
US-64,264
US-64,264
US-64
US-264
US-1 US-1,64
US-1,64
US-1
US-1
US-1
I-40
Red = Monthly Pickup
Blue = Bi-Monthly Pickup
Yellow= Bi-Weekly Pickup

Strategic Routes to be Included in the Litter Removal

County	Route	Beginning of Route	End of Route	Corridor Miles	# of Cleanup Cycles per Year	Corridor Miles of Cleanup per Year
Durham	I-40	Orange County Line	NC 55	8.2	6	49.2
Durham	I-40	NC 55	Wake County Line	4.6	12	55.2
Durham	I-540	I-40	Wake County Line	0.6	12	7.2
Durham	I-85	Exit 179	Granville County Line	5.3	12	63.6
Wake	I-40	Durham County Line	SR 1319 (Jones Franklin)	10.8	12	129.6
Wake	I-40 (Currently Under Construction)	SR 1319 (Jones Franklin)	I-440 - Exit 301	7.7	12	92.4
Wake	I-440	US 64 Bypass/US 264	I-40	13.8	12	165.6
Wake	I-440 (Currently Under Construction)	I-40	US 64 Bypass/US 264	2.8	12	33.6
Wake	I-40	I-440 - Exit 301	Johnston County Line	9.0	12	108
Wake	I-540	Durham County Line	US 64 Bypass	25.2	12	302.4
Wake	US 1	Chatham County Line	NC 540	7.3	6	43.8
Wake	US 1	NC 540	I-40	9.1	12	109.2
Wake	US 64	I-440	Franklin County Line	19.7	6	118.2
Wake	US 264	US 64	Johnston County Line	3.3	6	19.8
Wake	SR 1728 (Wade Ave)	I-40	I-440	3.1	12	37.2
				130.5		**1335**

Turnpike Routes to be Included in the Litter Removal

Durham	NC 147	I-40	Wake County Line	2.4	26	62.4
Wake	NC 147	Durham County Line	NC 540	1.0	26	26
Durham	NC-540	I-40	Wake County Line	0.5	26	13
Wake	NC-540	Durham County Line	NC 55 Bypass	16.1	26	418.6
				20		**520**

TYPICAL INTERCHANGE CONFIGURATION SHOWING LITTER REMOVAL LIMITS

Litter Removal to Follow Control of Access Fencing

Contractor will NOT be Responsible for Cleaning Up Litter in Wooded Areas Unless Litter is Visible from the Roadway

Typical Interchange.dgn 4/8/2010 3:51:58 PM

WORK ZONE TRAFFIC CONTROL GUIDANCE FOR LITTER/DEBRIS REMOVAL

The Contractor performing Work Zone Traffic Control shall have a minimum of one (1) NCDOT Certified Work Zone Supervisor.

General:

- Workers that are involved in litter/debris removal operations shall comply with the following:
  - Wear NCDOT approved safety vests for day time operations

- Litter/debris removal operations shall be confined within a maximum 5 mile stretch of roadway in a work period

- Conduct litter/debris removal operations behind lane closures at any location where workers and/or equipment are encroaching into the travel lanes. Lane closures shall be installed according to Roadway Standard Drawings 1101.02. Encroaching into travel lanes includes exiting and entering vehicles that are parked on shoulders.

- Use the following drawings to retrieve bagged litter/debris and any other materials after being collected by the workers.

- For operations where workers and equipment are confined to the shoulders, comply with the followings:

On Multilane Divided Facilities

  - A Truck Mounted Attenuator (TMA) shall be used to protect each group of workers removing litter/debris if the shoulder is wide enough to fit a TMA.
  - If a TMA is not used, a shoulder closure shall be installed
  - A shoulder closure shall be installed in locations where the shoulder is too narrow to accommodate a TMA without encroaching into the traffic lane
  - A shoulder closure or a TMA shall be used on the median side of the opposite direction if the following condition exists:
- Where workers and/or equipment are within 15’ from the adjacent travel lane in the opposite direction and are not protected from traffic in the opposite direction by any type of positive median protection such as concrete barrier, guardrail, or guiderail.
  - Shoulder closures shall be installed according to Roadway Standard Drawing 1101.04

Two-Lane, Two-Way Facilities over 4000 ADT

  - A shoulder closure shall be installed if workers are to be present more than one hour at any location.
  - If workers are to be present less than one hour, use portable advance warning signs (one in each direction) reading “LITTER PICKUP AHEAD”.
  - Shoulder closures shall be installed according to Roadway Standard Drawing 1101.04

Two-Lane, Two-Way Facilities 4000 ADT or lower

  - Use portable advance warning signs (one in each direction) reading “LITTER PICKUP AHEAD”. The sign should be located 500 feet ahead of the area where workers and or equipment will be present during the operation.

PLEASE NOTE THE FOLLOWING EXCEPTIONS:

The moving caravan operation will NOT be required to be used while retrieving bagged litter/debris in areas where the Contractor's equipment is able traverse the shoulder without encroaching into the travel lanes.

The truck mounted attenuator (TMA) will NOT be required to be used while retrieving bagged litter/debris in areas where the Contractor's equipment is able traverse the shoulder without encroaching into the travel lanes.

If the vehicle the Contractor is using is wider than the width of the shoulder a moving caravan operation WILL be required if the Contractor elects to allow the vehicle to encroach into the travel.

The Contractor may elect to park the vehicle outside of these narrow areas and remove bags by hand in lieu of the moving caravan operation.

The truck mounted attenuator (TMA) will NOT be required to protect workers picking up litter/debris if the Contractor's operations are carried out in such a way that the workers are positioned individually along a roadway and not travelling in a concentrated group.

If a concentrated group of workers are gathered together in a formation to conduct clean up then they shall be protected by a TMA.

The shoulder closure will NOT be required unless equipment remains stationary for more than 5 minutes and/or a concentrated group of workers are within 15 feet of an open travel lane and the area is not protected by barrier or guardrail.

On the primary routes in Division 5, the shoulder closure will NOT be required for equipment that does not remain stationary for more than 5 minutes, or for equipment that is parked in areas that are protected by barrier or guardrail, or for equipment that is parked more than 15 feet from an open travel lane.

On the primary routes in Division 5, the shoulder closure will NOT be required for a concentrated group of workers who are more than 15 feet of an open travel lane or are in an area that is protected by barrier or guardrail.

The lane closure will NOT be required unless equipment remains stationary for more than five minutes and/or a concentrated group of workers are within 10 feet of an open travel lane and the area is not protected by barrier or guardrail."

On the primary routes in Division 5, the lane closure will NOT be required for equipment that does not remain stationary for more than 5 minutes, or for equipment that is parked in areas that are protected by barrier or guardrail, or for equipment that is parked more than 15 feet from an open travel lane.

On the primary routes in Division 5, the lane closure will NOT be required for a concentrated group of workers who are more than 15 feet of an open travel lane or are in an area that is protected by barrier or guardrail.

A concentrated group of workers is defined as three (3) or more workers within a 500' section and within fifteen (15) feet from a travel lane, measured along the edge of the roadway, of other workers.

WORK ZONE SIGNING:

All portable signs and stands must meet or exceed the requirements of the National Cooperative Highway Research Program Report 350 for Work Zone Category II Devices, and be listed on North Carolina's approved products list or accepted as traffic qualified by the Traffic Control Section. Use portable work zone signs and stands specifically designed for one another.

Refer to the following:

SSRS 1089 for material specification
SSRS 1110 for construction specification
RSD 1110 for clearance specification

The W10-10A shall be used for high volume primary and secondary routes. Its dimensions are 48" X 48". It shall be mounted at a minimum height of five (5) feet above the elevation of the outermost edge of travel. The sign shall read "LITTER PICKUP AHEAD", and should be relocated accordingly during the prosecution of work. Additional signs may be required by the Engineer at interchanges.

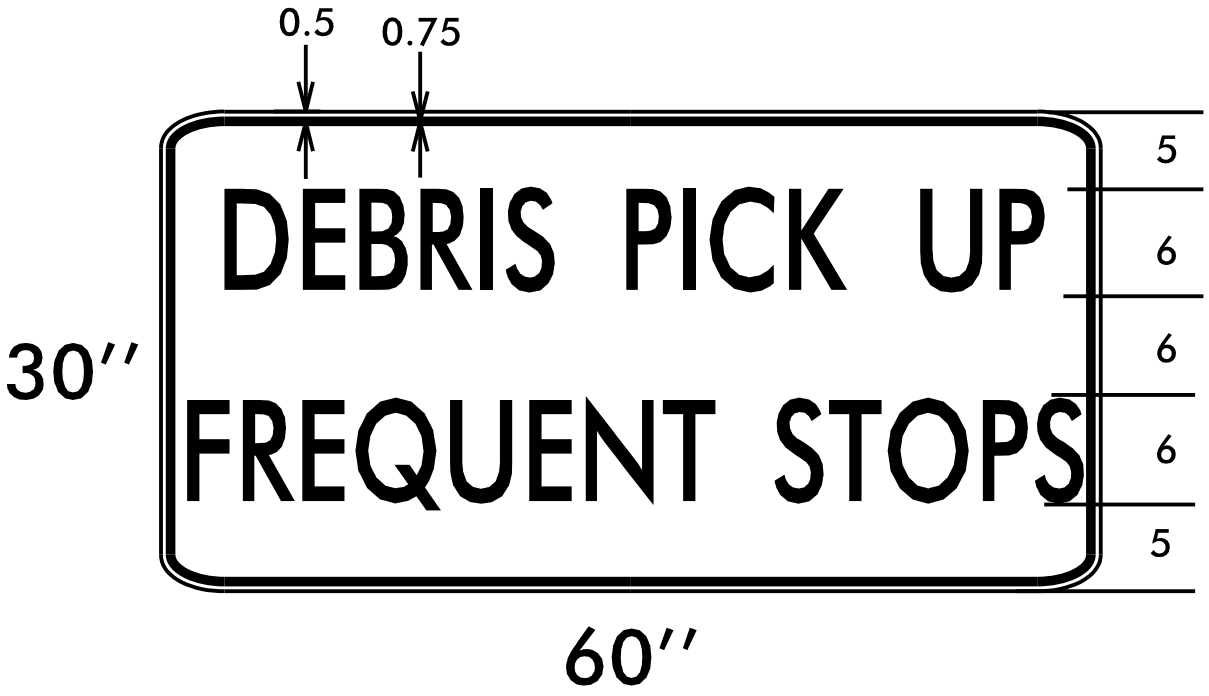

LETTERING – BLACK
BACKGROUND – FLOURESCENT ORANGE (RETROREFLECTIVE)

DETAIL OF SIGN TO BE MOUNTED ON BACK OF ALL VEHICLES USED FOR DEBRIS/LITTER REMOVAL

GENERAL NOTES

(1) THE FOLLOWING OPTIONS MAY BE USED AS THE FIRST ADVANCE WARNING THE MOTORISTS SEES:

A. TRUCK MOUNTED ADVANCE WARNING SIGNS
B. TRUCK MOUNTED CHANGEABLE MESSAGE SIGN (CMS)
C. STATIONARY CHANGEABLE MESSAGE SIGN (CMS)
(MUST USE 'NEXT 5 MILES' AND MAKE CIRCLE TO PICK UP SIGNS)

(2) TOTAL DISTANCE BETWEEN FIRST AND LAST VEHICLE IN CARAVAN SHOULD BE APPROXIMATELY ONE (1) MILE IN LENGTH.

(3) IF USING STATIONARY CMS, THE TOTAL DISTANCE BETWEEN THE CMS AND APPLICATION VEHICLE SHOULD NOT EXCEED 5 MILES AND SIGN SHOULD READ 'MACHINERY IN ROAD NEXT 5 MILES'.

(4) SIGNS ON VEHICLES SHOULD BE MOUNTED A MINIMUM OF ONE (1) FOOT FROM THE GROUND AND SHOULD NOT BLOCK THE MOTORIST'S SIGHT OF THE FLASHING ARROW BOARD AND/OR WARNING LIGHTS.

(5) SIGN W20-5L SHOULD BE PLACED ON BACK OF PROTECTION VEHICLE AND SIGN W20-5LD ON BACK OF ADVANCE WARNING VEHICLE IN MULTILANE DIVIDED TRAFFIC SO VEHICLES APPROACHING FROM REAR ARE NOTIFIED OF OPERATION

(6) RADIO COMMUNICATION BETWEEN VEHICLES IS RECOMMENDED.

(7) USE WARNING LIGHTS WITH ATLEAST 50% BEING AMBER IN COLOR ATTACHED TO THE VEHICLE AS HIGH AS POSSIBLE AND IN A MANNER SUCH THAT THEY ARE NOT OBSCURED BY EQUIPMENT OR SUPPLIES. VEHICLE HAZARD SIGNALS OR LIGHTS MAY BE USED TO SUPPLEMENT THIS REQUIREMENT. THIS REQUIREMENT APPLIES TO ALL WORK VEHICLES AND EQUIPMENT NOT INSIDE A LANE CLOSURE OR BEHIND A BARRIER. THIS REQUIREMENT DOES NOT APPLY TO DUMP TRUCKS, BUT IS ENCOURAGED.

(8) USE OF TRUCK MOUNTED CMS's ARE OPTIONAL WITH ADVANCED WARNING VEHICLES.

(9) USE A TYPE "C" FLASHING ARROW BOARD.

PANEL TYPE	MIN. SIZE
C	96"X48"

(10) MAY USE A TYPE "B" FLASHING ARROW BOARD ON 1ST ADVANCE WARNING VEHICLE.

PANEL TYPE	MIN. SIZE
B	60"X30"

(11) IF 43" X 73" CMS IS USED, LETTER HEIGHT MUST BE 18".

LEGEND

- PORTABLE SIGN
- DIRECTION OF TRAFFIC FLOW
- APPLICATION VEHICLE WITH ROTATING BEACON
- PROTECTION VEHICLE WITH TRUCK MOUNTED IMPACT ATTENUATOR (TMA) AND WARNING LIGHTS (SEE ROADWAY STANDARD NO. 1165.01)
- ADVANCE WARNING VEHICLE, TRUCK WITH MOUNTED FAP
- FLASHING ARROW BOARD, APPROPRIATE DIRECTION INDICATED

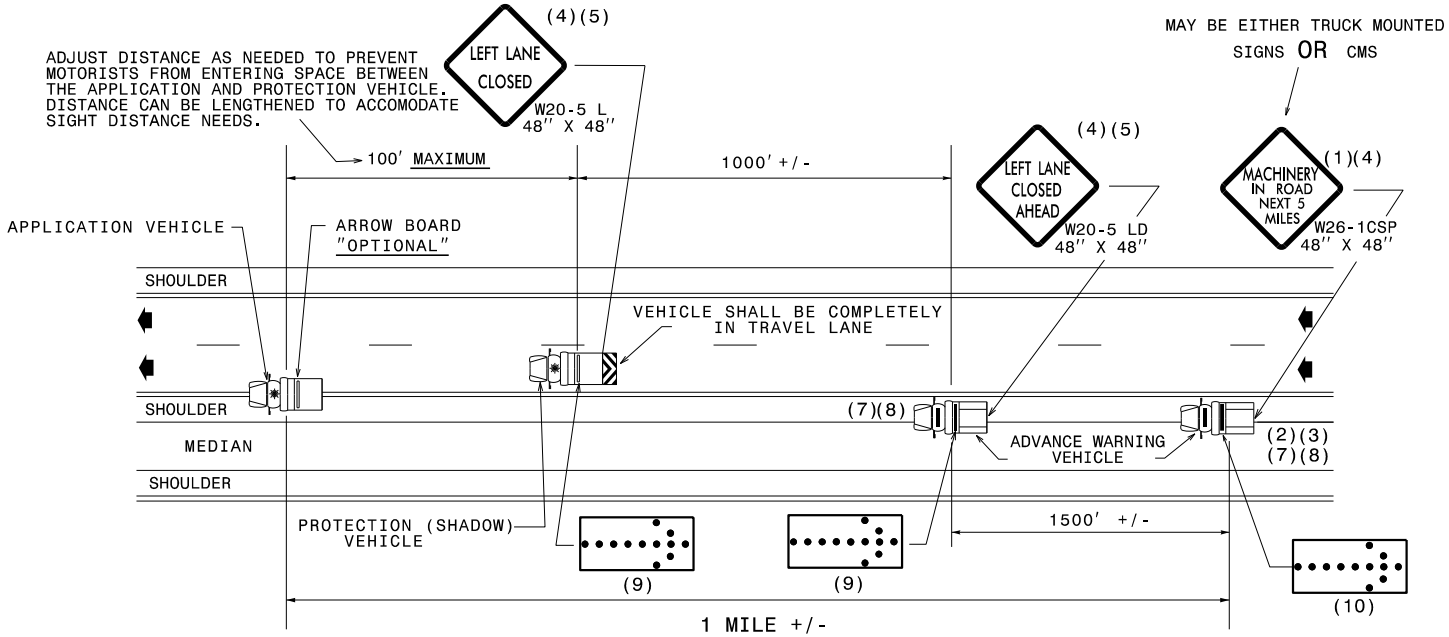

MOVING OPERATION CARAVAN

(OPERATIONS TRAVELING 3 MPH OR FASTER)

SPRAYING 60 MPH & ABOVE MULTILANE DIVIDED ROADWAYS

IN MEDIAN AND ON RIGHT SIDE W/PAVED SHOULDERS LESS THAN 10' WIDE

DRAWING NUMBER 1

IMPLEMENTATION DATE: 10/18/13

GENERAL NOTES

(1) THE FOLLOWING OPTIONS MAY BE USED FOR THE FIRST ADVANCE WARNING THE MOTORISTS SEES:

A. TRUCK MOUNTED ADVANCE WARNING SIGNS
B. TRUCK MOUNTED CHANGEABLE MESSAGE SIGN (CMS)
C. STATIONARY CHANGEABLE MESSAGE SIGN (CMS) (MUST USE 'NEXT 5 MILES' AND MAKE CIRCLE TO PICK UP CMS)

(2) TOTAL DISTANCE BETWEEN FIRST AND LAST VEHICLE IN CARAVAN SHOULD BE APPROXIMATELY ONE (1) MILE IN LENGTH.

(3) IF USING STATIONARY CMS, THE TOTAL DISTANCE BETWEEN THE CMS AND APPLICATION VEHICLE SHOULD NOT EXCEED 5 MILES AND SIGN SHOULD READ 'SHOULDER CLOSED'.

(4) SIGNS ON VEHICLES SHOULD BE MOUNTED A MINIMUM OF ONE (1) FOOT FROM THE GROUND AND SHOULD NOT BLOCK THE MOTORIST'S SIGHT OF THE FLASHING ARROW BOARD AND/OR WARNING LIGHTS.

(5) SIGN W21-5BSP SHOULD BE PLACED ON BACK OF ADVANCE WARNING VEHICLE IN MULTILANE DIVIDED TRAFFIC SO VEHICLES APPROACHING FROM REAR ARE NOTIFIED OF OPERATION.

(6) RADIO COMMUNICATION BETWEEN VEHICLES IS RECOMMENDED.

(7) USE WARNING LIGHTS WITH ATLEAST 50% BEING AMBER IN COLOR ATTACHED TO THE VEHICLE AS HIGH AS POSSIBLE AND IN A MANNER SUCH THAT THEY ARE NOT OBSCURED BY EQUIPMENT OR SUPPLIES. VEHICLE HAZARD SIGNALS OR LIGHTS MAY BE USED TO SUPPLEMENT THIS REQUIREMENT. THIS REQUIREMENT APPLIES TO ALL WORK VEHICLES AND EQUIPMENT NOT INSIDE A LANE CLOSURE OR BEHIND A BARRIER. THIS REQUIREMENT DOES NOT APPLY TO DUMP TRUCKS, BUT IS ENCOURAGED.

(8) USE OF CMS's ARE OPTIONAL WITH ADVANCED WARNING VEHICLES.

(9) USE A TYPE "C" FLASHING ARROW BOARD.

PANEL TYPE	MIN. SIZE
C	96"X48"

(10) IF 43" X 73" CMS IS USED, LETTER HEIGHT MUST BE 18".

LEGEND

- PORTABLE SIGN
- DIRECTION OF TRAFFIC FLOW
- APPLICATION VEHICLE WITH ROTATING BEACON
- PROTECTION VEHICLE WITH TRUCK MOUNTED IMPACT ATTENUATOR (TMIA) AND ROTATING BEACON (SEE ROADWAY STANDARD NO. 1165.01)
- ADVANCE WARNING VEHICLE WITH FLASHING ARROW BOARD
- FLASHING ARROW BOARD, TYPE "C" "CAUTION MODE"

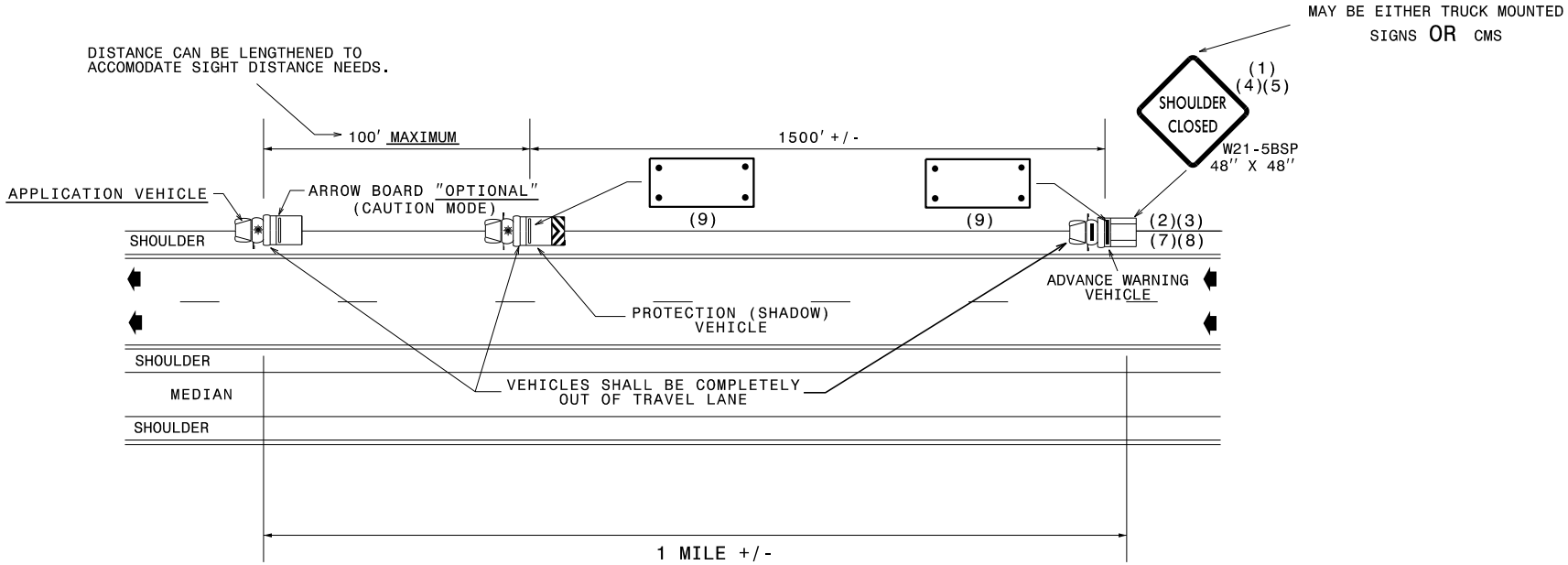

MOVING OPERATION CARAVAN

(OPERATIONS TRAVELING 3 MPH OR FASTER)

SPRAYING 60 MPH & ABOVE MULTILANE DIVIDED ROADWAYS IN MEDIAN AND ON RIGHT SIDE W/PAVED SHOULDERS 10' OR WIDER

DRAWING NUMBER 2
IMPLEMENTATION DATE: 10/18/13

GENERAL NOTES

(1) THE FOLLOWING OPTIONS MAY BE USED AS THE FIRST ADVANCE WARNING THE MOTORISTS SEES:

A. TRUCK MOUNTED ADVANCE WARNING SIGNS
B. MOVING CHANGEABLE MESSAGE SIGN (CMS)

(2) TOTAL DISTANCE BETWEEN FIRST AND LAST VEHICLE IN CARAVAN SHOULD BE APPROXIMATELY ONE (1) MILE IN LENGTH.

(3) SIGNS ON VEHICLES SHOULD BE MOUNTED A MINIMUM OF ONE (1) FOOT FROM THE GROUND AND SHOULD NOT BLOCK THE MOTORIST'S SIGHT OF THE FLASHING ARROW BOARD AND/OR WARNING LIGHTS.

(4) SIGN W20-5L SHOULD BE PLACED ON BACK OF PROTECTION VEHICLE AND SIGN W26-1CSP ON BACK OF ADVANCE WARNING VEHICLE IN MULTILANE DIVIDED TRAFFIC SO VEHICLES APPROACHING FROM REAR ARE NOTIFIED OF OPERATION.

(5) RADIO COMMUNICATION BETWEEN VEHICLES IS RECOMMENDED.

(6) USE WARNING LIGHTS WITH ATLEAST 50% BEING AMBER IN COLOR ATTACHED TO THE VEHICLE AS HIGH AS POSSIBLE AND IN A MANNER SUCH THAT THEY ARE NOT OBSCURED BY EQUIPMENT OR SUPPLIES. VEHICLE HAZARD SIGNALS OR LIGHTS MAY BE USED TO SUPPLEMENT THIS REQUIREMENT. THIS REQUIREMENT APPLIES TO ALL WORK VEHICLES AND EQUIPMENT NOT INSIDE A LANE CLOSURE OR BEHIND A BARRIER. THIS REQUIREMENT DOES NOT APPLY TO DUMP TRUCKS, BUT IS ENCOURAGED.

(7) USE OF CMS's ARE OPTIONAL WITH ADVANCED WARNING VEHICLES.

(8) USE A TYPE "C" FLASHING ARROW BOARD.

PANEL TYPE	MIN. SIZE
C	96"X48"

(9) USE A TYPE "B" FLASHING ARROW BOARD.

PANEL TYPE	MIN. SIZE
B	60"X30"

(10) IF 43" X 73" CMS IS USED, LETTER HEIGHT MUST BE 18".

LEGEND

- PORTABLE SIGN
- DIRECTION OF TRAFFIC FLOW
- APPLICATION VEHICLE WITH LIGHT BAR
- PROTECTION VEHICLE WITH TRUCK MOUNTED IMPACT ATTENUATOR (TMA) AND LIGHT BAR (SEE ROADWAY STANDARD NO. 1165.01)
- ADVANCE WARNING VEHICLE i.e. PICKUP TRUCK WITH MOUNTED SIGN
- FLASHING ARROW BOARD, TYPE "B" APPROPRIATE DIRECTION INDICATED

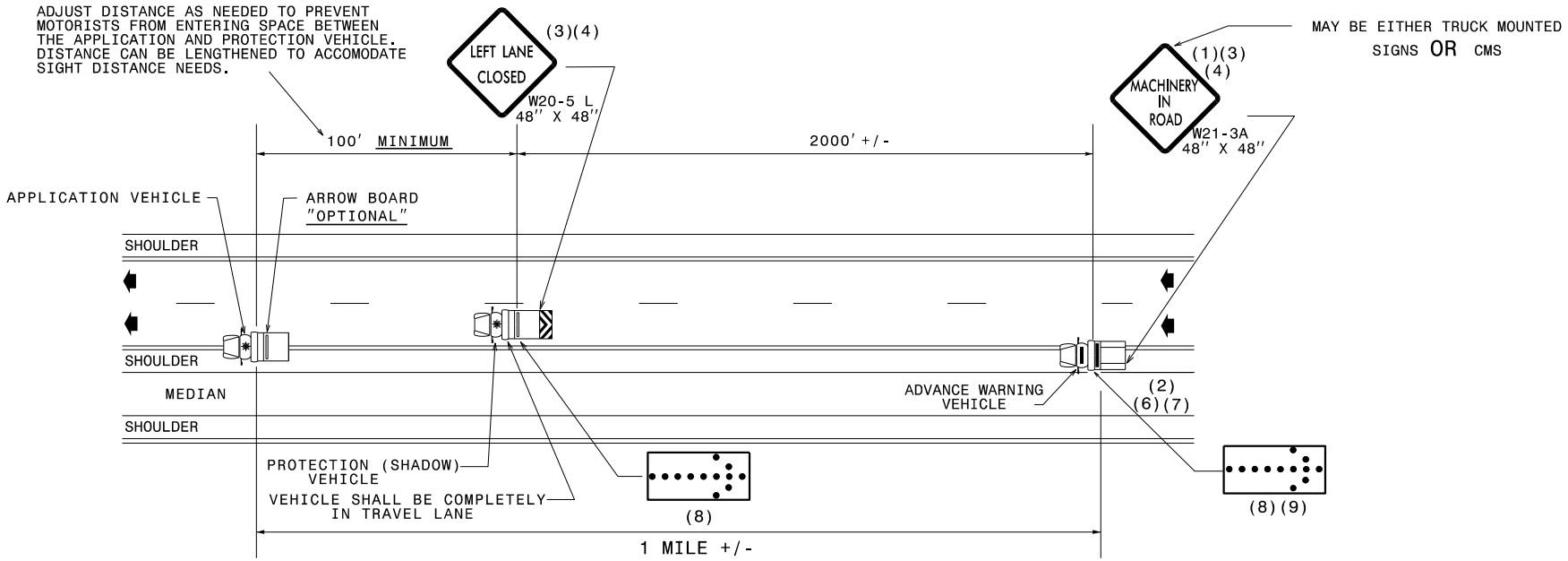

MOVING OPERATION CARAVAN

(OPERATIONS TRAVELING 3 MPH OR FASTER)

SPRAYING OTHER MULTILANE DIVIDED ROADWAYS

IN MEDIAN AND ON RIGHT SIDE W/PAVED SHOULDERS LESS THAN 10' WIDE

DRAWING NUMBER 3

IMPLEMENTATION DATE: 10/18/13

GENERAL NOTES

(1) THE FOLLOWING OPTIONS MAY BE USED AS THE FIRST ADVANCE WARNING THE MOTORISTS SEE:

A. TRUCK MOUNTED ADVANCE WARNING SIGNS
B. MOVING CHANGEABLE MESSAGE SIGN (CMS)
C. GROUND MOUNTED ADVANCE WARNING SIGNS (MUST USE 'NEXT 5 MILES' AND MAKE CIRCLE TO PICK UP SIGNS)
D. STATIONARY CHANGEABLE MESSAGE SIGN (CMS) (MUST USE 'NEXT 5 MILES' AND MAKE CIRCLE TO PICK UP CMS)

(2) TOTAL DISTANCE BETWEEN FIRST AND LAST VEHICLE IN CARAVAN SHOULD BE APPROXIMATELY ONE (1) MILE IN LENGTH.

(3) IF USING GROUND MOUNTED ADVANCE WARNING SIGNS OR STATIONARY CMS, THE TOTAL DISTANCE BETWEEN THE FIRST ADVANCE WARNING SIGN OR CMS AND APPLICATION VEHICLE SHOULD NOT EXCEED 5 MILES AND SIGN W26-1CSP SHOULD READ 'MACHINERY IN ROAD NEXT 5 MILES'.

(4) SIGNS ON VEHICLES SHOULD BE MOUNTED A MINIMUM OF ONE (1) FOOT FROM THE GROUND AND SHOULD NOT BLOCK THE MOTORIST'S SIGHT OF THE FLASHING ARROW BOARD AND/OR LIGHT BAR.

(5) SIGN W26-1BSP OR R4-7A SHOULD BE PLACED ON FRONT OF THE APPLICATION VEHICLE AND SIGN W26-1BSP OR W21-3A ON BACK OF THE PROTECTION VEHICLE IN TWO-LANE, TWO-WAY TRAFFIC SO VEHICLE APPROACHING FROM THE FRONT AND REAR ARE NOTIFIED OF OPERATION.

(6) IF A LEAD VEHICLE IS ADDED TO OPERATION, IT SHOULD HAVE THE SAME ADVANCE WARNING SIGNS AS THE APPLICATION VEHICLE SHOWN BELOW.

(7) RADIO COMMUNICATION BETWEEN VEHICLES IS RECOMMENDED.

(8) USE WARNING LIGHTS WITH ATLEAST 50% BEING AMBER IN COLOR ATTACHED TO THE VEHICLE AS HIGH AS POSSIBLE AND IN A MANNER SUCH THAT THEY ARE NOT OBSCURED BY EQUIPMENT OR SUPPLIES. VEHICLE HAZARD SIGNALS OR LIGHTS MAY BE USED TO SUPPLEMENT THIS REQUIREMENT. THIS REQUIREMENT APPLIES TO ALL WORK VEHICLES AND EQUIPMENT NOT INSIDE A LANE CLOSURE OR BEHIND A BARRIER. THIS REQUIREMENT DOES NOT APPLY TO DUMP TRUCKS, BUT IS ENCOURAGED.

(9) USE OF CMS's ARE OPTIONAL WITH ADVANCED WARNING VEHICLES.

(10) USE A TYPE "B" FLASHING ARROW BOARD.

PANEL TYPE	MIN. SIZE
B	60"X30"

(11) IF 43" X 73" CMS IS USED, LETTER HEIGHT MUST BE 18".

LEGEND

PORTABLE SIGN

DIRECTION OF TRAFFIC FLOW

APPLICATION VEHICLE WITH ROTATING BEACON

PROTECTION VEHICLE WITH TRUCK MOUNTED IMPACT ATTENUATOR (TMIA) AND ROTATING BEACON (SEE ROADWAY STANDARD NO. 1165.01

ADVANCE WARNING VEHICLE i.e., PICKUP TRUCK WITH MOUNTED SIGN

FLASHING ARROW BOARD, TYPE "B" "CAUTION MODE"

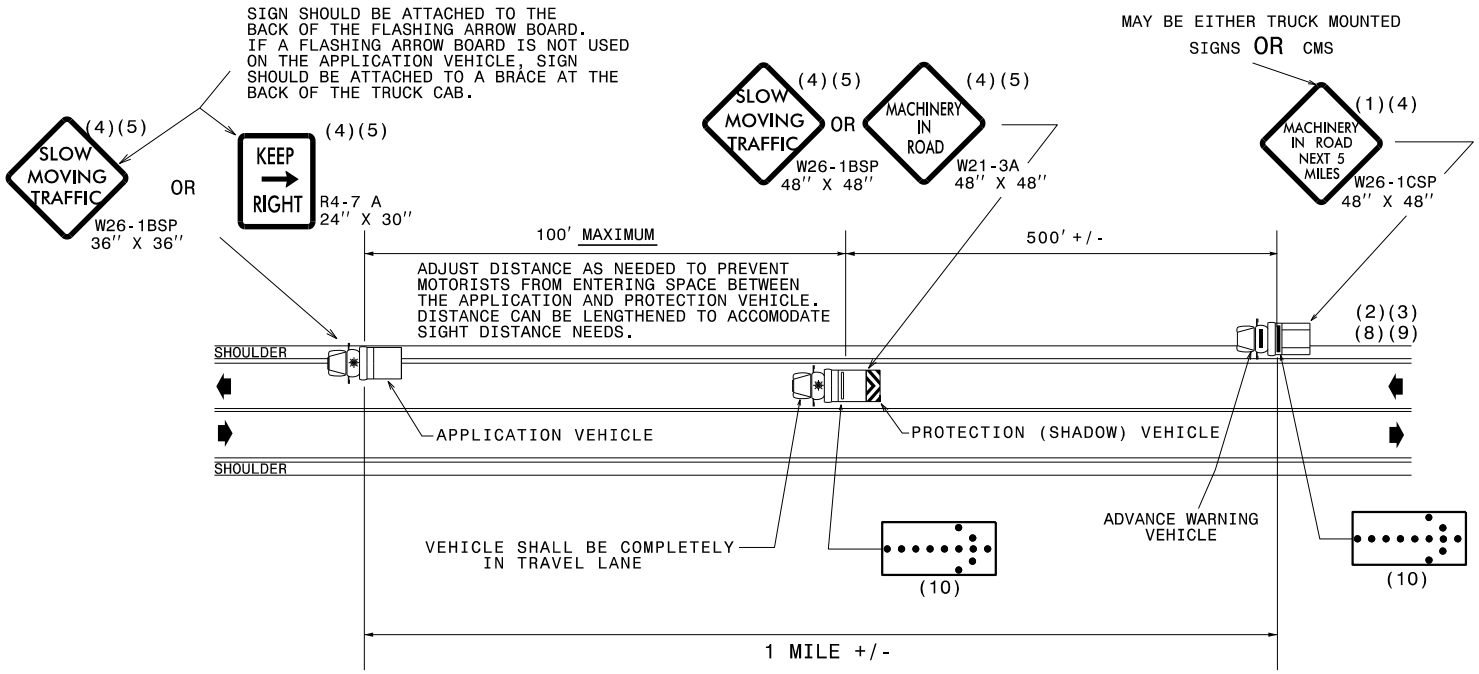

MOVING OPERATION CARAVAN

(OPERATIONS TRAVELING 3 MPH OR FASTER)

SPRAYING TWO-LANE TWO-WAY ROADWAYS

WITH ADT GREATER THAN 5000

DRAWING NUMBER 4

IMPLEMENTATION DATE: 10/18/13

GENERAL NOTES

(1) THE FOLLOWING OPTIONS MAY BE USED AS THE FIRST ADVANCE WARNING THE MOTORISTS SEE:

A. TRUCK MOUNTED ADVANCE WARNING SIGNS
B. MOVING CHANGEABLE MESSAGE SIGN (CMS)
C. GROUND MOUNTED ADVANCE WARNING SIGNS (W26-1CSP) (MUST USE 'NEXT 5 MILES' AND MAKE CIRCLE TO PICK UP SIGNS)
D. GROUND MOUNTED CHANGEABLE MESSAGE SIGN (CMS) (MUST USE 'NEXT 5 MILES' AND MAKE CIRCLE TO PICK UP CMS)

(2) TOTAL DISTANCE BETWEEN FIRST AND LAST VEHICLE IN CARAVAN SHOULD BE APPROXIMATELY ONE (1) MILE IN LENGTH.

(3) IF USING GROUND MOUNTED ADVANCE WARNING SIGNS OR STATIONARY CMS, THE TOTAL DISTANCE BETWEEN THE FIRST ADVANCE WARNING SIGN OR CMS AND APPLICATION VEHICLE SHOULD NOT EXCEED 5 MILES AND SIGN W21-3BSP SHOULD READ 'MACHINERY IN ROAD NEXT 5 MILES'.

(4) SIGNS ON VEHICLES SHOULD BE MOUNTED A MINIMUM OF ONE (1) FOOT FROM THE GROUND AND SHOULD NOT BLOCK THE MOTORIST'S SIGHT OF THE FLASHING ARROW BOARD AND/OR WARNING LIGHTS.

(5) SIGN W26-1BSP OR R4-7A SHOULD BE PLACED ON FRONT OF THE APPLICATION VEHICLE AND SIGN W26-1BSP OR W21-3A ON BACK OF THE PROTECTION VEHICLE IN TWO-LANE, TWO-WAY TRAFFIC SO VEHICLE APPROACHING FROM THE FRONT AND REAR ARE NOTIFIED OF OPERATION.

(6) IF A LEAD VEHICLE IS ADDED TO OPERATION, IT SHOULD HAVE THE SAME ADVANCE WARNING SIGNS AS THE APPLICATION VEHICLE SHOWN BELOW.

(7) RADIO COMMUNICATION BETWEEN VEHICLES IS RECOMMENDED.

(8) USE WARNING LIGHTS WITH ATLEAST 50% BEING AMBER IN COLOR ATTACHED TO THE VEHICLE AS HIGH AS POSSIBLE AND IN A MANNER SUCH THAT THEY ARE NOT OBSCURED BY EQUIPMENT OR SUPPLIES. VEHICLE HAZARD SIGNALS OR LIGHTS MAY BE USED TO SUPPLEMENT THIS REQUIREMENT. THIS REQUIREMENT APPLIES TO ALL WORK VEHICLES AND EQUIPMENT NOT INSIDE A LANE CLOSURE OR BEHIND A BARRIER. THIS REQUIREMENT DOES NOT APPLY TO DUMP TRUCKS, BUT IS ENCOURAGED.

(9) USE OF CMS's ARE OPTIONAL WITH ADVANCED WARNING VEHICLES.

(10) USE A TYPE "B" FLASHING ARROW BOARD.

PANEL TYPE	MIN. SIZE
B	60"X30"

(11) IF 43" X 73" CMS IS USED, LETTER HEIGHT MUST BE 18".

LEGEND

PORTABLE SIGN

DIRECTION OF TRAFFIC FLOW

APPLICATION VEHICLE WITH ROTATING BEACON

ADVANCE WARNING VEHICLE i.e., PICKUP TRUCK WITH MOUNTED SIGN

FLASHING ARROW BOARD, TYPE "B" "CAUTION MODE"

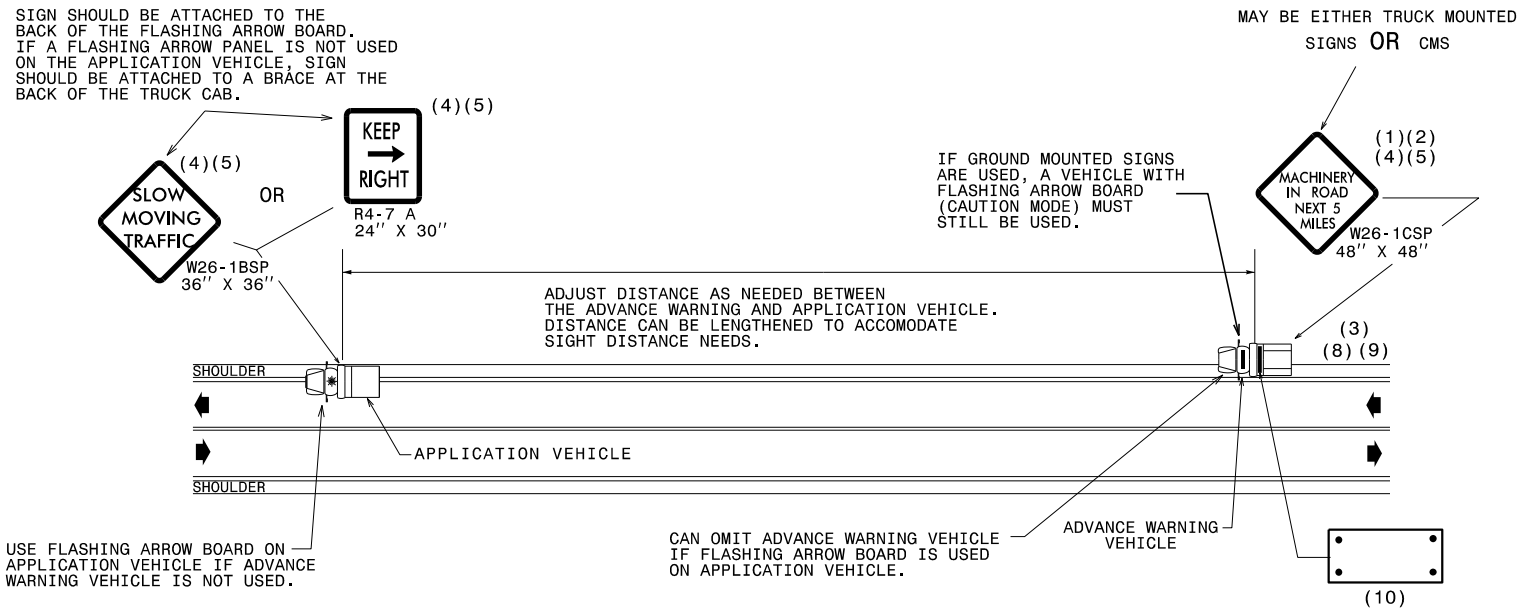

MOVING OPERATION CARAVAN

(OPERATIONS TRAVELING 3 MPH OR FASTER)

SPRAYING TWO-LANE TWO-WAY ROADWAYS

WITH ADT LESS THAN OR EQUAL TO 5000

DRAWING NUMBER 5

IMPLEMENTATION DATE: 10/18/13

STATE OF
NORTH CAROLINA
DEPT. OF TRANSPORTATION
DIVISION OF HIGHWAYS
RALEIGH, N.C.

1-12

ENGLISH STANDARD DRAWING FOR

WORK VEHICLE LIGHTING SYSTEMS AND TMA DELINEATION

SHEET 1 OF 1

1165.01

LIGHT SYSTEM OPTIONS

I. TRUCKS WITHOUT DUMP BODIES- CHOICE OF EITHER:
   A. LIGHT BARS (15" MINIMUM)- EITHER LED OR ROTATING FLASH WITH FULL AMBER LIGHTS AND AMBER DOME OR LIGHT BARS MAY BE HALF AMBER/HALF WHITE WITH AMBER DOME. (ALL WHITE LIGHT SYSTEMS ARE PROHIBITED)

   B. 2 HIGH INTENSITY STROBES (CLASS 2)- AMBER LED/AMBER FLASH AND AMBER DOME MOUNTED ON EACH SIDE OF THE HEADBOARD

II. TRUCKS WITH DUMP BODIES- (NOT REQUIRED, BUT ENCOURAGED)

   A. 2 HIGH INTENSITY STROBES (CLASS 2)- AMBER LED/AMBER FLASH AND AMBER DOME MOUNTED ON EACH SIDE DF THE CAB PROTECTDR

TMA DELINEATION

ENTIRE END OF ATTENUATOR SHALL BE DELINEATED

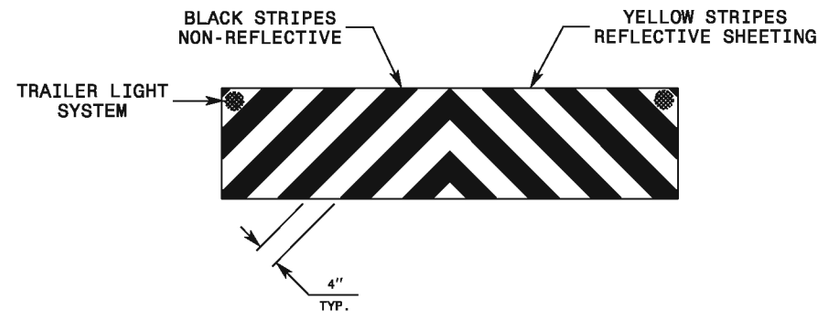

DUMP BODY

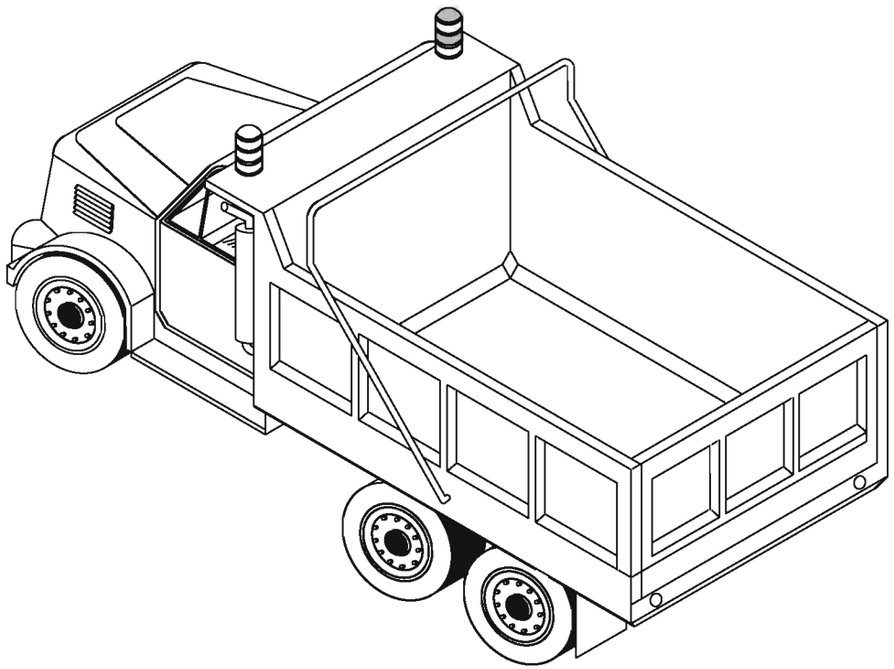

NON-DUMP BODY

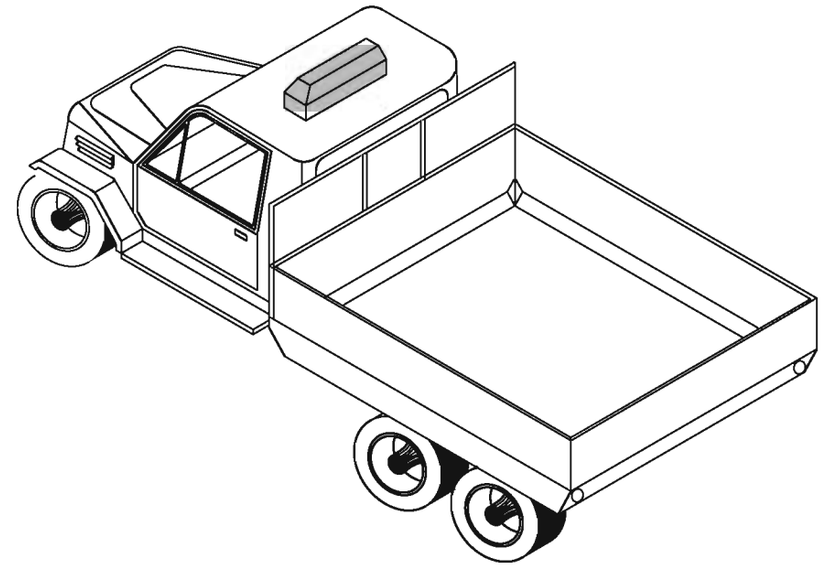

GENERAL NOTES FOR TMA REQUIREMENTS

1- WHEN TMA'S USED FOR SHADOW VEHICLES, CONTACT THE TMA MANUFACTURER FOR SPECIFIC TRUCK REQUIREMENTS.

2- TMA MUST MEET OR EXCEED THE REQUIREMENTS OF NCHRP 350 TEST LEVEL II FOR WORK ZONES WITH POSTED SPEED LIMIT OF 45 MPH OR LESS; OR TEST LEVEL III FOR WORK ZONES WITH POSTED SPEED LIMIT OF 50 MPH OR GREATER. TMA MAY EITHER BE TRUCK MOUNTED OR TRAILER MOUNTED.

3- SEE THE DEPARTMENT'S APPROVED PRODUCT LIST AT https://apps.dot.state.nc.us/vendor/approvedproducts.

STATE OF
NORTH CAROLINA
DEPT. OF TRANSPORTATION
DIVISION OF HIGHWAYS
RALEIGH, N.C.

1-12

ENGLISH STANDARD DRAWING FOR

WORK VEHICLE LIGHTING SYSTEMS AND TMA DELINEATION

SHEET 1 OF 1

1165.01

NORTH CAROLINA DEPARTMENT OF TRANSPORTATION

LITTER/DEBRIS REMOVAL AND RECYCLING REPORT

Month: _____, 20_____

Date	County	Route(s)	Corridor Segment/ Mile Markers/GPS	Lbs. Litter Disposal	Lbs. Recycling
			TOTAL LBS		

Supervisor's Signature: _____ Date: _____