DocuSign Envelope ID: 74E39D82-A6A7-4D61-B54D-3DFC40107626

09/08/99

TIP PROJECT: W-5206AA

PROJECT: 45336.3.FR27

See Sheet 1-A For Index of Sheets

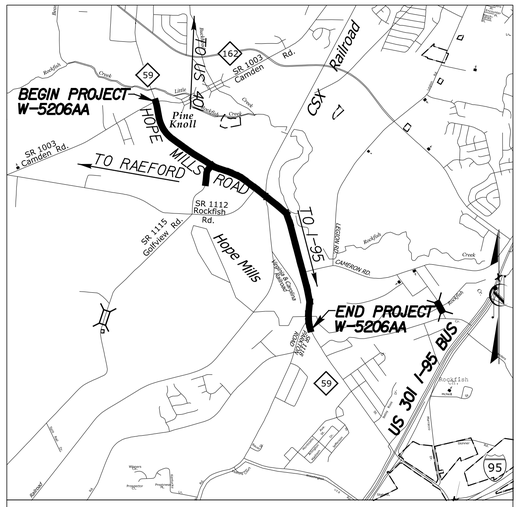

VICINITY MAP (NTS)

STATE OF NORTH CAROLINA
DIVISION OF HIGHWAYS

CUMBERLAND COUNTY

STATE	STATE PROJECT REFERENCE NO.	SHEET NO.	TOTAL SHEETS
N.C.	W-5206AA	1	

STATE PROJ. NO.	F.A. PROJ. NO.	DESCRIPTION
45336.1.27	HSIP-0059(8)	P.E.
45336.2.FR27	HSIP-0059(8)	R/W & UTILITIES
45336.3.FR27	HSIP-0059(8)	CONSTRUCTION

LOCATION: NC 59 (Main Street/Hope Mills Road) from SR 1003 (Camden Road) to SR 1118 (Parkton Road)

TYPE OF WORK: Grading, Drainage, Paving, Signals, Signing, and Pavement Markings (Resurfacing from SR 1112, Rockfish Road to SR 1118, Parkton Road)

RESURFACING FROM -L- 69+80.90 TO JUST SOUTH OF PARKTON ROAD, SR 1118. SEE TYPICAL SECTIONS 5 AND 6 ON SHEETS 2-B. (NTS)

GRAPHIC SCALES

50 25 0 50 100
PLANS

50 25 0 50 100
PROFILE (HORIZONTAL)

10 5 0 10 20
PROFILE (VERTICAL)

DESIGN DATA

ADT 2012 = 35,000

V = 50 MPH

FUNC CLASS = PRINCIPAL ARTERIAL

PROJECT LENGTH

LENGTH ROADWAY TIP PROJECT W-5206AA = 2.538 MILES
TOTAL LENGTH TIP PROJECT W-5206AA = 2.538 MILES

vhb 4000 WestChase Boulevard, Suite 530 Raleigh, NC 27607
NC License No. C-3705

2012 STANDARD SPECIFICATIONS

RIGHT OF WAY DATE:
APRIL 30, 2014

LETTING DATE:
APRIL 15, 2015

JIMMY GOODNIGHT, PE
PROJECT ENGINEER

LAURA C. FISHER, PE
PROJECT DESIGN ENGINEER

SEAN MATUSZEWSKI
DIVISION DESIGN ENGINEER
NCDOT CONTACT

HYDRAULICS ENGINEER
Sungate Design Group, PA
Joshua G. Dalton, PE
3/3/2015
DocuSigned by: Joshua Dalton
C1D89ADBC14994C3...
SIGNATURE:
NORTH CAROLINA PROFESSIONAL SEAL 26971 ENGINEER JOSHUA G. DALTON

ROADWAY DESIGN ENGINEER
VHB Engineering NC, P.C.
Jimmy Goodnight, PE
jgoodnight@vhb.com
Digitally signed by jgoodnight@vhb.com
DN: cn=jgoodnight@vhb.com
Date: 2015.03.03 14:43:05 -05'00'
SIGNATURE:
NORTH CAROLINA PROFESSIONAL SEAL 14493 ENGINEER JIMMY STAFFORD GOODNIGHT, JR.

STATE OF NORTH CAROLINA DEPARTMENT OF TRANSPORTATION

3/2/2015
W5206AA_rdy_tsh_01.dgn
bpease

PROJECT REFERENCE NO.	SHEET NO.
W-5206AA	1-A

ROADWAY DESIGN ENGINEER

NORTH CAROLINA PROFESSIONAL SEAL 14493 ENGINEER JAMES STAFFORD GOODNIGHT

jgoodnight@vhb.com

Digitally signed by jgoodnight@vhb.com
DN: cn=jgoodnight@vhb.com
Date: 2015.03.03 14:43:33 -05'00'

EFF. 01-17-2012

REV. 10-30-2012

INDEX OF SHEETS

SHEET NUMBER	SHEET
1	TITLE SHEET
1-A	INDEX OF SHEETS, GENERAL NOTES, AND STANDARD DRAWINGS
1-B	CONVENTIONAL SYMBOLS
1-C	CENTERLINE COORDINATE LIST, BENCHMARKS
2-A THRU 2-C	PAVEMENT SCHEDULE, TYPICAL SECTIONS,& DETAILS
2-D	STANDARD CAST-IN-PLACE (CIP) GRAVITY RETAINING WALL
2-E	DETAIL OF PIPE HANDRAIL MOUNTED ON RETAINING WALL
3-A	DRAINAGE SUMMARY
3-B	PARCEL INDEX, EARTHWORK SUMMARY
4 THRU 9	PLAN SHEETS
10	-Y- (GOLFVIEW ROAD) PROFILE SHEET
TMP-1 THRU TMP-13	TRAFFIC MANAGEMENT PLANS
PMP-1 THRU PMP-9	PAVEMENT MARKING PLANS
EC-1 THRU EC-15	EROSION CONTROL PLANS
SIGN-1 THRU SIGN-8	SIGNING PLANS
SIG-1.0 THRU SIG-4.1	SIGNAL PLANS
SIG M-1 THRU SIG M-9	METAL POLE STANDARDS
UO-1 THRU UO-7	UTILITIES BY OTHERS PLANS
X-1	CROSS-SECTION SUMMARY
X-2 THRU X-28	CROSS-SECTIONS

2012 ROADWAY ENGLISH STANDARD DRAWINGS

The following Roadway Standards as appear in "Roadway Standard Drawings" Highway Design Branch - N. C. Department of Transportation - Raleigh, N. C., Dated January, 2012 are applicable to this project and by reference hereby are considered a part of these plans:

STD.NO.	TITLE
DIVISION 2 - EARTHWORK	
200.02	Method of Clearing - Method II
225.02	Guide for Grading Subgrade - Secondary and Local
225.04	Method of Obtaining Superelevation - Two Lane Pavement
225.06	Method of Grading Sight Distance at Intersections
DIVISION 3 - PIPE CULVERTS	
300.01	Method of Pipe Installation
310.10	Driveway Pipe Construction
DIVISION 5 - SUBGRADE, BASES AND SHOULDERS	
560.01	Method of Shoulder Construction - High Side of Superelevated Curve - Method I
DIVISION 6 - ASPHALT BASES AND PAVEMENTS	
654.01	Pavement Repairs
DIVISION 8 - INCIDENTALS	
840.00	Concrete Base Pad for Drainage Structures
840.01	Brick Catch Basin - 12" thru 54" Pipe
840.02	Concrete Catch Basin - 12" thru 54" Pipe
840.03	Frame, Grates and Hood - for Use on Standard Catch Basin
840.14	Concrete Drop Inlet - 12" thru 30" Pipe
840.15	Brick Drop Inlet - 12" thru 30" Pipe
840.16	Drop Inlet Frame and Grates - for use with Std. Dwg 840.14 and 840.15
840.24	Frames and Narrow Slot Sag Grates
840.34	Traffic Bearing Junction Box - for Use with Pipes 42" and Under
840.35	Traffic Bearing Grated Drop Inlet - for cast iron double frame and grates
840.54	Manhole Frame and Cover
840.72	Pipe Collar
846.01	Concrete Curb, Gutter and Curb & Gutter
848.01	Concrete Sidewalk
848.02	Driveway Turnout - Radius Type
848.04	Street Turnout
848.05	Curb Ramp - Proposed Curb & Gutter
848.06	Curb Ramp - Existing Curb & Gutter
852.01	Concrete Islands
852.02	Concrete Mountable Median - for use with Rigid or Flexible Pavement
852.06	Method for Placement of Drop Inlets in Concrete Islands

GENERAL NOTES:

2012 SPECIFICATIONS
EFFECTIVE: 01-17-2012
REVISED: 10-31-2014

GRADE LINE:
GRADING AND SURFACING:

THE GRADE LINES SHOWN DENOTE THE FINISHED ELEVATION OF THE PROPOSED SURFACING AT GRADE POINTS SHOWN ON THE TYPICAL SECTIONS. GRADE LINES MAY BE ADJUSTED AT THEIR BEGINNING AND ENDING AND AT STRUCTURES AS DIRECTED BY THE ENGINEER IN ORDER TO SECURE A PROPER TIE-IN.

GRADING AND SURFACING OR RESURFACING AND WIDENING:

THE GRADE LINES SHOWN DENOTE THE FINISHED ELEVATION OF THE PROPOSED SURFACING AT GRADE POINTS SHOWN ON THE TYPICAL SECTIONS. WHERE NO GRADE LINES ARE SHOWN, THE PROFILES SHOWN DENOTE THE TOP ELEVATION OF THE EXISTING PAVEMENT ALONG THE CENTER LINE OF SURVEY ON WHICH THE PROPOSED RESURFACING WILL BE PLACED. GRADE LINES MAY BE ADJUSTED BY THE ENGINEER IN ORDER TO SECURE A PROPER TIE-IN.

CLEARING:

CLEARING ON THIS PROJECT SHALL BE PERFORMED TO THE LIMITS ESTABLISHED BY METHOD II.

SUPERELEVATION:

ALL CURVES ON THIS PROJECT SHALL BE SUPERELEVATED IN ACCORDANCE WITH STD. NO. 225.04 USING THE RATE OF SUPERELEVATION AND RUNOFF SHOWN ON THE PLANS. SUPERELEVATION IS TO BE REVOLVED ABOUT THE GRADE POINTS SHOWN ON THE TYPICAL SECTIONS.

SIDE ROADS:

THE CONTRACTOR WILL BE REQUIRED TO DO ALL NECESSARY WORK TO PROVIDE SUITABLE CONNECTIONS WITH ALL ROADS, STREETS, AND DRIVES ENTERING THIS PROJECT. THIS WORK WILL BE PAID FOR AT THE CONTRACT UNIT PRICE FOR THE PARTICULAR ITEMS INVOLVED.

DRIVEWAYS:

STREET TURNOUT:

STREET RETURNS SHALL BE CONSTRUCTED IN ACCORDANCE WITH STD. NO. 848.04 USING THE RADII NOTED ON PLANS.

SUBSURFACE PLANS:

NO SUBSURFACE PLANS ARE AVAILABLE ON THIS PROJECT. THE CONTRACTOR SHOULD MAKE HIS OWN INVESTIGATION AS TO THE SUBSURFACE CONDITIONS.

UTILITIES:

UTILITY OWNERS ON THIS PROJECT ARE DUKE ENERGY PROGRESS, CENTURYLINK, FAYETTEVILLE PUBLIC WORKS COMMISSION(WATER AND SEWER), TIME WARNER CABLE, PIEDMONT NATURAL GAS

ANY RELOCATION OF EXISTING UTILITIES WILL BE ACCOMPLISHED BY OTHERS.

RIGHT-OF-WAY MARKERS:

ALL RIGHT-OF-WAY MARKERS ON THIS PROJECT SHALL BE PLACED BY OTHERS.

CURB RAMPS

CURB RAMPS ARE SHOWN ON THE PLANS AT APPROXIMATE LOCATIONS.
CONSTRUCT ALL CURB RAMPS ACCORDANCE WITH STD 848.05 and/or 848.06.

8/17/99

3/3/2015
W5206AA_rdy_tsh_01a.dgn
bgrass

12/05/11

PROJECT REFERENCE NO.	SHEET NO.
W-5206AA	1-B

Note: Not to Scale

****S.U.E. = Subsurface Utility Engineering***

STATE OF NORTH CAROLINA
DIVISION OF HIGHWAYS

CONVENTIONAL PLAN SHEET SYMBOLS

BOUNDARIES AND PROPERTY:

- State Line
- County Line
- Township Line
- City Line
- Reservation Line
- Property Line
- Existing Iron Pin — EIP
- Property Corner
- Property Monument — ECM
- Parcel/Sequence Number — 123
- Existing Fence Line
- Proposed Woven Wire Fence
- Proposed Chain Link Fence
- Proposed Barbed Wire Fence
- Existing Wetland Boundary — WLB
- Proposed Wetland Boundary — WLB
- Existing Endangered Animal Boundary — EAB
- Existing Endangered Plant Boundary — EPB
- Known Soil Contamination: Area or Site
- Potential Soil Contamination: Area or Site

BUILDINGS AND OTHER CULTURE:

- Gas Pump Vent or U/G Tank Cap
- Sign — S
- Well — W
- Small Mine
- Foundation
- Area Outline
- Cemetery
- Building
- School
- Church
- Dam

HYDROLOGY:

- Stream or Body of Water
- Hydro, Pool or Reservoir
- Jurisdictional Stream — JS
- Buffer Zone 1 — BZ 1
- Buffer Zone 2 — BZ 2
- Flow Arrow
- Disappearing Stream
- Spring
- Wetland
- Proposed Lateral, Tail, Head Ditch — FLOW
- False Sump

RAILROADS:

- Standard Gauge — CSX TRANSPORTATION
- RR Signal Milepost — MILEPOST 35
- Switch — SWITCH
- RR Abandoned
- RR Dismantled

RIGHT OF WAY:

- Baseline Control Point
- Existing Right of Way Marker
- Existing Right of Way Line
- Proposed Right of Way Line — RW
- Proposed Right of Way Line with Iron Pin and Cap Marker — RW
- Proposed Right of Way Line with Concrete or Granite R/W Marker — RW
- Proposed Control of Access Line with Concrete C/A Marker — CA
- Existing Control of Access — CA
- Proposed Control of Access — CA
- Existing Easement Line — E
- Proposed Temporary Construction Easement — E
- Proposed Temporary Drainage Easement — TDE
- Proposed Permanent Drainage Easement — PDE
- Proposed Permanent Drainage / Utility Easement — DUE
- Proposed Permanent Utility Easement — PUE
- Proposed Temporary Utility Easement — TUE
- Proposed Aerial Utility Easement — AUE
- Proposed Permanent Easement with Iron Pin and Cap Marker

ROADS AND RELATED FEATURES:

- Existing Edge of Pavement
- Existing Curb
- Proposed Slope Stakes Cut — C
- Proposed Slope Stakes Fill — F
- Proposed Curb Ramp — CR
- Existing Metal Guardrail
- Proposed Guardrail
- Existing Cable Guiderail
- Proposed Cable Guiderail
- Equality Symbol
- Pavement Removal

VEGETATION:

- Single Tree
- Single Shrub
- Hedge
- Woods Line
- Orchard
- Vineyard — Vineyard

EXISTING STRUCTURES:

MAJOR:

- Bridge, Tunnel or Box Culvert — CONC
- Bridge Wing Wall, Head Wall and End Wall — CONC WW

MINOR:

- Head and End Wall — CONC HW
- Pipe Culvert
- Footbridge
- Drainage Box: Catch Basin, DI or JB — CB
- Paved Ditch Gutter
- Storm Sewer Manhole — S
- Storm Sewer — S

UTILITIES:

POWER:

- Existing Power Pole
- Proposed Power Pole
- Existing Joint Use Pole
- Proposed Joint Use Pole
- Power Manhole — P
- Power Line Tower
- Power Transformer
- U/G Power Cable Hand Hole
- H-Frame Pole
- Recorded U/G Power Line — P
- Designated U/G Power Line (S.U.E.*) — P

TELEPHONE:

- Existing Telephone Pole
- Proposed Telephone Pole
- Telephone Manhole — T
- Telephone Booth
- Telephone Pedestal — T
- Telephone Cell Tower
- U/G Telephone Cable Hand Hole — HH
- Recorded U/G Telephone Cable — T
- Designated U/G Telephone Cable (S.U.E.*) — T
- Recorded U/G Telephone Conduit — TC
- Designated U/G Telephone Conduit (S.U.E.*) — TC
- Recorded U/G Fiber Optics Cable — T FO
- Designated U/G Fiber Optics Cable (S.U.E.*) — T FO

WATER:

- Water Manhole — W
- Water Meter
- Water Valve
- Water Hydrant
- Recorded U/G Water Line — W
- Designated U/G Water Line (S.U.E.*) — W
- Above Ground Water Line — A/G Water

TV:

- TV Satellite Dish
- TV Pedestal — C
- TV Tower
- U/G TV Cable Hand Hole — HH
- Recorded U/G TV Cable — TV
- Designated U/G TV Cable (S.U.E.*) — TV
- Recorded U/G Fiber Optic Cable — TV FO
- Designated U/G Fiber Optic Cable (S.U.E.*) — TV FO

GAS:

- Gas Valve
- Gas Meter
- Recorded U/G Gas Line — G
- Designated U/G Gas Line (S.U.E.*) — G
- Above Ground Gas Line — A/G Gas

SANITARY SEWER:

- Sanitary Sewer Manhole
- Sanitary Sewer Cleanout
- U/G Sanitary Sewer Line — SS
- Above Ground Sanitary Sewer — A/G Sanitary Sewer
- Recorded SS Forced Main Line — FSS
- Designated SS Forced Main Line (S.U.E.*) — FSS

MISCELLANEOUS:

- Utility Pole
- Utility Pole with Base
- Utility Located Object
- Utility Traffic Signal Box — S
- Proposed Traffic Signal Upgrade
- Utility Unknown U/G Line — ?UTL
- U/G Tank; Water, Gas, Oil
- Underground Storage Tank, Approx. Loc. — UST
- A/G Tank; Water, Gas, Oil
- Geoenvironmental Boring
- U/G Test Hole (S.U.E.*)
- Abandoned According to Utility Records — AATUR
- End of Information — E.O.I.

CENTERLINE COORDINATE LIST

Point #	Chain	Station	Northing (Y)	Easting (X)
1	L	10+00.00	449766.6291	2010521.9275
2	L	11+00.00	449669.6985	2010546.4890
3	L	12+00.00	449571.9102	2010567.3760
4	L	13+00.00	449473.5304	2010585.2991
5	L	14+00.00	449375.1039	2010602.9693
6	L	15+00.00	449276.6775	2010620.6394
7	L	16+00.00	449178.2510	2010638.3096
8	L	17+00.00	449079.9525	2010656.6523
9	L	18+00.00	448982.9060	2010680.6943
10	L	19+00.00	448887.7469	2010711.3666
11	L	20+00.00	448794.9277	2010748.5236
12	L	21+00.00	448704.8897	2010791.9884
13	L	22+00.00	448618.0609	2010841.5545
14	L	23+00.00	448534.8542	2010896.9863
15	L	24+00.00	448455.6651	2010958.0201
16	L	25+00.00	448380.8702	2011024.3658
17	L	26+00.00	448310.8250	2011095.7080
18	L	27+00.00	448245.8625	2011171.7074
19	L	28+00.00	448185.8696	2011251.7004
20	L	29+00.00	448126.9087	2011332.4693
21	L	30+00.00	448067.9479	2011413.2382
22	L	31+00.00	448008.9870	2011494.0072
23	L	32+00.00	447950.0261	2011574.7761
24	L	33+00.00	447891.0653	2011655.5450
25	L	34+00.00	447832.1044	2011736.3139
26	L	35+00.00	447773.1436	2011817.0828
27	L	36+00.00	447714.5617	2011898.1257
28	L	37+00.00	447657.5306	2011980.2666
29	L	38+00.00	447602.1536	2012063.5315
30	L	39+00.00	447547.8848	2012147.5249
31	L	40+00.00	447493.6429	2012231.5358
32	L	41+00.00	447439.4011	2012315.5466
33	L	42+00.00	447385.1593	2012399.5575
34	L	43+00.00	447330.9174	2012483.5684
35	L	44+00.00	447276.6756	2012567.5792
36	L	45+00.00	447222.4338	2012651.5901
37	L	46+00.00	447168.1920	2012735.6009
38	L	47+00.00	447115.2760	2012820.4466
39	L	48+00.00	447065.5278	2012907.1875
40	L	49+00.00	447019.0255	2012995.7109
41	L	50+00.00	446975.8331	2013085.8956
42	L	51+00.00	446936.0097	2013177.6177
43	L	52+00.00	446899.6100	2013270.7516
44	L	53+00.00	446866.5637	2013365.1291
45	L	54+00.00	446834.4707	2013459.8394
46	L	55+00.00	446802.3777	2013554.5497
47	L	56+00.00	446770.2846	2013649.2600
48	L	57+00.00	446738.1916	2013743.9703
49	L	58+00.00	446705.3431	2013838.4160
50	L	59+00.00	446667.7433	2013931.0634
51	L	60+00.00	446624.9135	2014021.4121
52	L	61+00.00	446576.9937	2014109.1673
53	L	62+00.00	446524.1403	2014194.0424
54	L	63+00.00	446466.5257	2014275.7605
55	L	64+00.00	446405.6520	2014355.0970
56	L	65+00.00	446344.6541	2014434.3388
57	L	66+00.00	446283.6562	2014513.5805
58	L	67+00.00	446222.6583	2014592.8223
59	L	68+00.00	446161.6604	2014672.0640
60	L	69+00.00	446100.6625	2014751.3058
61	L	69+50.00	446070.1635	2014790.9266
62	Y	10+00.00	446368.2762	2012645.8578
63	Y	11+00.00	446467.8526	2012655.0524
64	Y	12+00.00	446567.4290	2012664.2470
65	Y	13+00.00	446667.0054	2012673.4416
66	Y	14+00.00	446766.4082	2012684.0499
67	Y	15+00.00	446860.8463	2012715.8870
68	Y	16+00.00	446942.4829	2012773.0503
69	Y	17+00.00	447010.7407	2012846.0871
70	Y	17+78.09	447075.4515	2012889.2784

BENCHMARKS

BM #	ELEV.	STATION	Northing (Y)	Easting (X)	DESCRIPTION
1	176.06	13+74.32 (LT)	449410.0	2010652.0	BRICK CORNER ON RET WALL
2	182.25	26+67.04 (LT)	448330.0	2011199.0	CONC CORNER AT BUS CENTER
3	185.13	37+80.80 (LT)	447679.0	2012091.0	RR SPIKE IN 30" OAK
4	158.11	46+56.66 (LT)	447229.0	2012840.0	BACK OF CONC CURB CORNER
5	158.87	59+96.54 (LT)	446685.0	2014048.0	CONC CORNER ON STOOP
6	135.68	66+35.04 (LT)	446319.0	2014585.0	CONC CORNER ON SIDEWALK

5/14/99

3/8/2005
W5206AA_rdy_tsh_01c.dgn
bpeace

DocuSign Envelope ID: 74E39D82-A6A7-4D61-B54D-3DFC40107626

PROJECT REFERENCE NO.	SHEET NO.
W-5206AA	2-A
R/W SHEET NO.	
ROADWAY DESIGN ENGINEER	HYDRAULICS ENGINEER

NORTH CAROLINA PROFESSIONAL SEAL 14493 ENGINEER JAMES STANLEY GOODNIGHT, JR.
jgoodnight@vhb.com
DocuSigned by: James Goodnight 1D8BA0BC1489403... Date: 2015.03.03 14:44:14 -05'00'

NORTH CAROLINA PROFESSIONAL SEAL 26971 ENGINEER JOSHUA G. DALTON
DocuSigned by: Joshua Dalton 1D8BA0BC1489403...
3/3/2015

PAVEMENT SCHEDULE

C1	PROPOSED APPROXIMATELY 1.5″ ASPHALT CONCRETE SURFACE COURSE, TYPE S9.5C AT AN AVERAGE RATE OF 168 LBS. PER SQ. YD.	R2	PROPOSED 2′-6″ CONCRETE CURB AND GUTTER
C2	PROPOSED APPROXIMATELY 3.0″ ASPHALT CONCRETE SURFACE COURSE, TYPE S9.5C AT AN AVERAGE RATE OF 168 LBS. PER SQ. YD. IN EACH OF TWO LAYERS.	R3	PROPOSED 8″X12″ CONCRETE CURB
C3	PROPOSED VARIABLE DEPTH ASPHALT CONCRETE SURFACE COURSE, TYPE S9.5B AT AN AVERAGE RATE OF 112 LBS. PER SQ. YD. PER 1″ DEPTH. TO BE PLACED IN LAYERS NOT TO EXCEED 2″ IN DEPTH	R4	5″ MONOLITHIC CONCRETE ISLAND (KEYED IN)
C4	PROPOSED APPROXIMATELY 1.5″ ASPHALT CONCRETE SURFACE COURSE, TYPE S9.5B AT AN AVERAGE RATE OF 168 LBS. PER SQ. YD.	S	4″ CONCRETE SIDEWALK
D1	PROPOSED APPROXIMATELY 2.5″ ASPHALT CONCRETE INTERMEDIATE COURSE, TYPE I19.0B AT AN AVERAGE RATE OF 285 LBS. PER SQ. YD.	T	EARTH MATERIAL
D2	PROPOSED APPROXIMATELY 4.0″ ASPHALT CONCRETE INTERMEDIATE COURSE, TYPE I19.0C AT AN AVERAGE RATE OF 456 LBS. PER SQ. YD.	U	EXISTING PAVEMENT
D3	PROPOSED VARIABLE DEPTH ASPHALT CONCRETE INTERMEDIATE COURSE, TYPE I19.0B AT AN AVERAGE RATE OF 114 LBS. PER SQ. YD. PER 1″ DEPTH. TO BE PLACED IN LAYERS NOT LESS THAN 2.5″ OR GREATER THAN 4″ IN DEPTH	V1	MILLING EXISTING ASPHALT PAVEMENT 0″ TO 1.5″ DEPTH. REPLACE WITH 1.5″ OF S9.5C
E1	PROPOSED APPROXIMATELY 4.0″ ASPHALT CONCRETE BASE COURSE, TYPE B25.0C AT AN AVERAGE RATE OF 456 LBS. PER SQ. YD.	V2	MILLING EXISTING ASPHALT PAVEMENT 1.5″ DEPTH.
E2	PROPOSED VARIABLE DEPTH ASPHALT CONCRETE BASE COURSE, TYPE B25.0B AT AN AVERAGE RATE OF 114 LBS. PER SQ. YD. PER 1″ DEPTH. TO BE PLACED IN LAYERS NOT GREATER THAN 5.5″ IN DEPTH OR LESS THAN 3″ IN DEPTH.	W	VARIABLE DEPTH ASPHALT PAVEMENT ON -Y- (SEE WEDGING DETAIL BELOW)
R1	EXISTING 2′ 6″ CONCRETE CURB AND GUTTER		

NOTE: PAVEMENT EDGE SLOPES ARE 1:1 UNLESS SHOWN OTHERWISE.

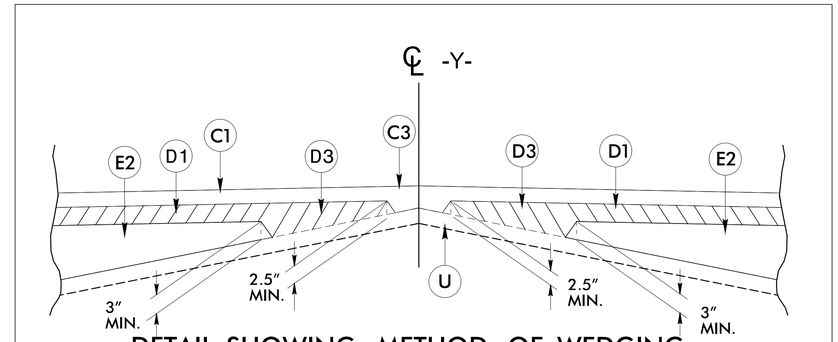

DETAIL SHOWING METHOD OF WEDGING ON –Y– (GOLFVIEW ROAD)

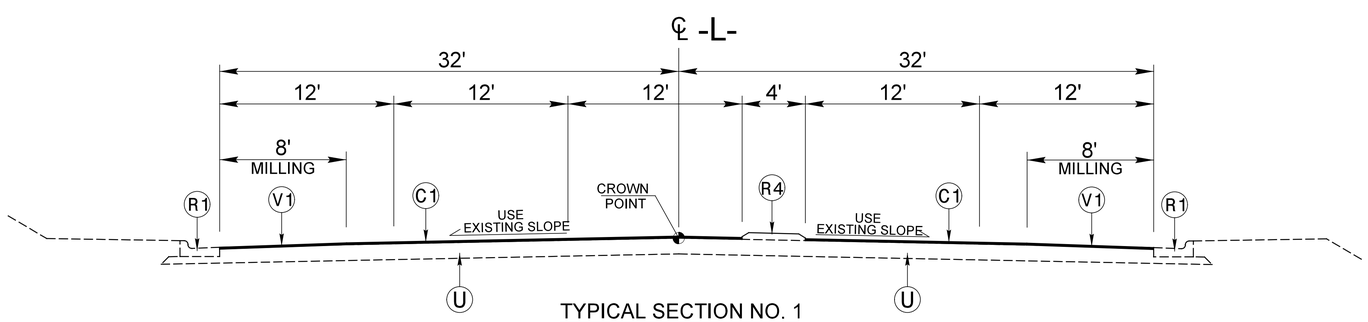

TYPICAL SECTION NO. 1
-L- Sta. 10+27.09 to 15+00
TAPER 12' LANES TO 11' LANES FROM -L- STA 13+50 TO 15+00

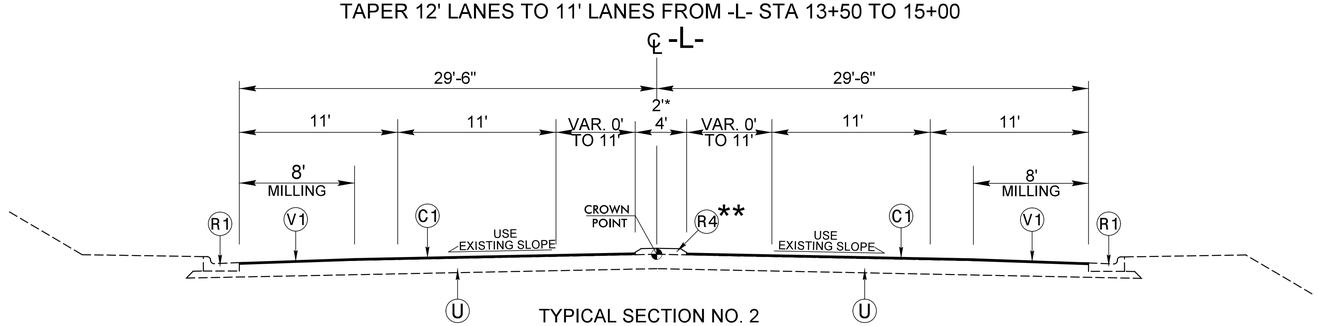

** USE DOWELS FOR THE 2 FT. WIDE ISLANDS AS DIRECTED BY THE ENGINEER

TYPICAL SECTION NO. 2
-L- Sta. 15+00 to 34+60
-L- Sta. 47+80 to 54+00 *(2' Wide Island)

PLACE 8" BLOCK OUT IN 2' ISLAND FOR SIGNS

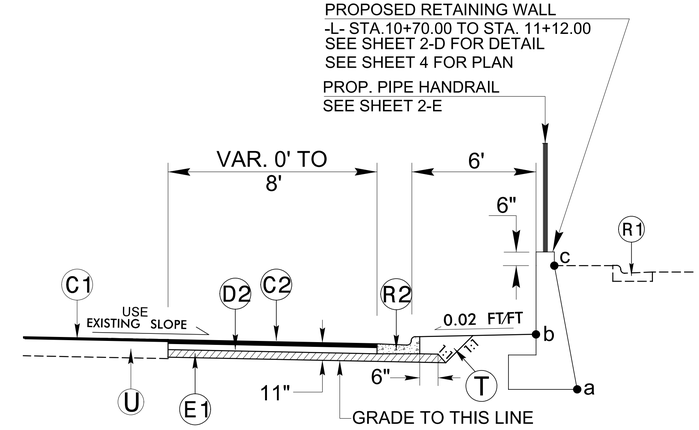

USE WITH TYPICAL SECTION NO.1 AT THE FOLLOWING LOCATION:
-L- STA 10+51.58 TO STA 11+21.00 (RT)

PROPOSED RETAINING WALL ELEVATIONS
-L- STA 10+70.00 TO STA 11+12.00 (RT)

STATION	PROPOSED WALL BOTTOM ELEV. (a)	PROPOSED. LOWER GROUND ELEV. (b)	PROPOSED UPPER GROUND ELEV. (c)
10+70.00	162.3300	164.3300	166.4208
10+80.00	162.9187	164.9187	167.8691
10+90.00	163.4846	165.4846	168.1879
11+00.00	164.0591	166.0591	168.6099
11+12.00	164.5841	166.5841	168.9341

5/14/99

3/3/2015
W-5206AA_rdy_typ_02.dgn
bpeas

DocuSign Envelope ID: 74E39D82-A6A7-4D61-B54D-3DFC40107626

PROJECT REFERENCE NO.	SHEET NO.
W-5206AA	2-B
R/W SHEET NO.	
ROADWAY DESIGN ENGINEER	HYDRAULICS ENGINEER

NORTH CAROLINA PROFESSIONAL SEAL 14493 ENGINEER JAMES E. SMITH, JR.
jgoodnight@vhb.com
DocuSigned by: Joshua Dalton CERTIFICATE: C141904C3 3/3/2015 ENGINEER JOSHUA G. DALTON

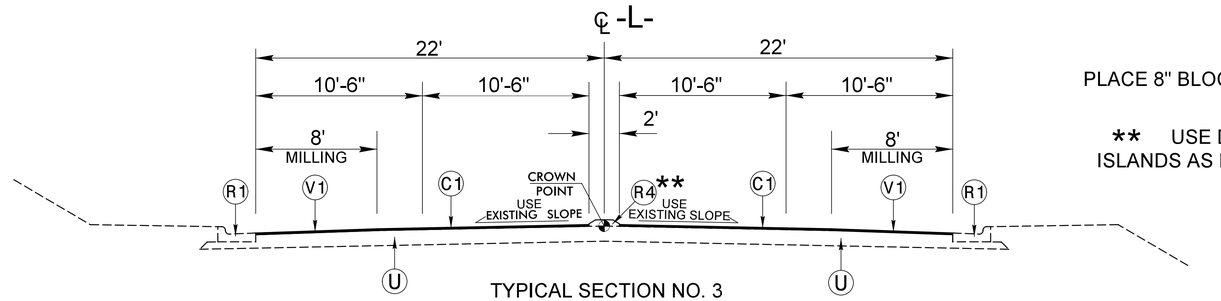

TYPICAL SECTION NO. 3
-L- Sta. 34+60 to 47+80
-L- Sta. 54+00 to 69+80.90

PLACE 8" BLOCK OUT IN 2' ISLAND FOR SIGNS

** USE DOWELS FOR THE 2 FT. WIDE ISLANDS AS DIRECTED BY THE ENGINEER

DETAIL SHOWING MILLING AND RESURFACING TO BE USED ON OUTSIDE LANES (LEFT & RIGHT)

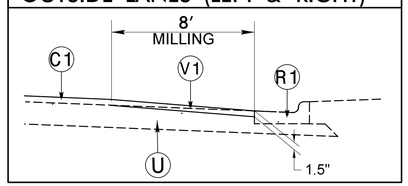

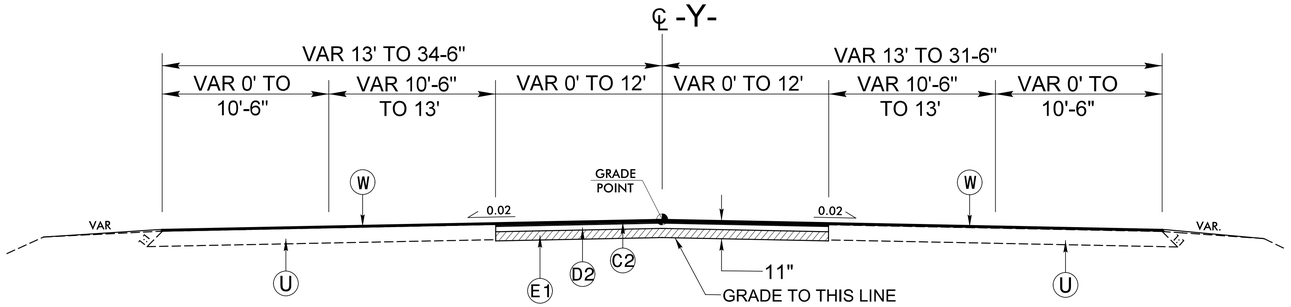

TYPICAL SECTION NO. 4
-Y- STA. 10+40.00 TO 17+43.09

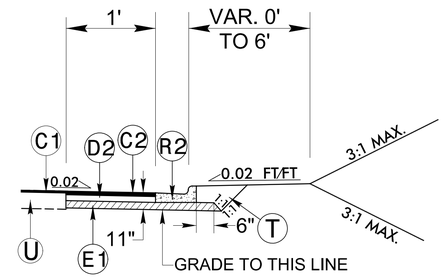

TYPICAL SECTION NO. 4A
USE WITH TYPICAL SECTION #4 FROM:
-Y- STA. 12+94 TO STA. 17+43.09 (LT.)
-Y- STA. 12+03 TO STA. 17+43.09 (RT.)

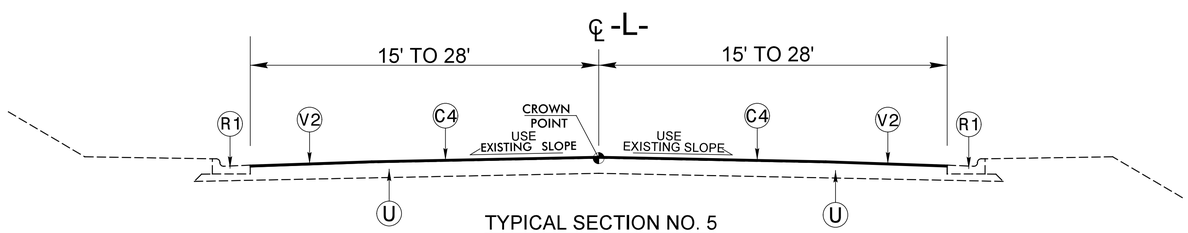

TYPICAL SECTION NO. 5
-L- Sta. 69+80.90 TO THE END OF THE EXISTING CURB AND GUTTER, APPROXIMATELY 0.14 MILES NORTH OF THE PARKTON ROAD (SR 1118) INTERSECTION
(APPROXIMATELY 1.08 MILES)

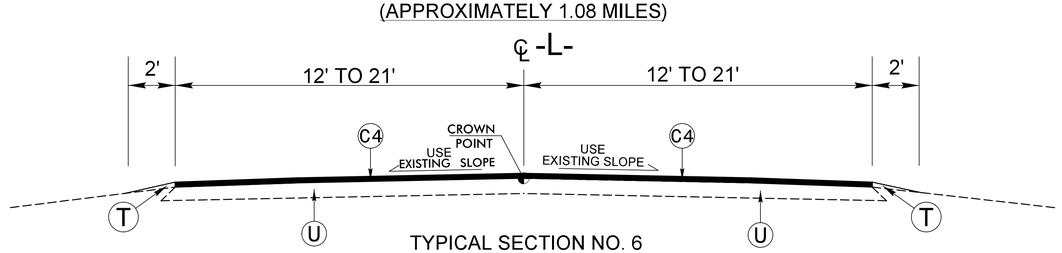

TYPICAL SECTION NO. 6

USE FROM APPROXIMATELY 0.14 MILES NORTH OF THE PARKTON ROAD (SR 1118) INTERSECTION TO THE PAVEMENT JOINT APPROXIMATELY 0.19 MILES SOUTH OF THE PARKTON ROAD INTERSECTION
(APPROXIMATELY 0.33 MILES)

C1	1.5" S9.5C
C2	3.0" S9.5C
C4	1.5" S9.5B
D2	4.0" I19.0C
E1	4.0" B25.0C
R1	EXISTING 2'-6" CURB AND GUTTER
R2	PROPOSED 2'-6" CURB AND GUTTER
R3	PROPOSED 8"X12" CONCRETE CURB
R4	5" MONOLITHIC CONC. ISLAND (KEYED IN)
S	4" CONCRETE SIDEWALK
T	EARTH MATERIAL
U	EXISTING PAVEMENT
V1	MILLING 0" TO 1.5" REPLACE WITH 1.5" S9.5C
V2	1.5" MILLING

NOTE: PAVEMENT EDGE SLOPES ARE 1:1 UNLESS SHOWN OTHERWISE.

5/14/99

3/2/2015
W-5206AA_rdy_typ_02.dgn
bpeters

DocuSign Envelope ID: 74E39D82-A6A7-4D61-B54D-3DFC40107626

PROJECT REFERENCE NO.	SHEET NO.
W-5206AA	2-C
R/W SHEET NO.	
ROADWAY DESIGN ENGINEER	HYDRAULICS ENGINEER

NORTH CAROLINA PROFESSIONAL SEAL 14493 ENGINEER JAMES G. GOODMIGHT, JR.
jgoodmight@ncdot.gov
DocuSigned by: 3/3/2015 | 10:04:25 EST
jgoodmight@hb.com
DocuSigned by: Joshua G. Dalton 1D9BA0C8C1409443... 3/3/2015 | 10:58:21 -05'00'
NORTH CAROLINA PROFESSIONAL SEAL 26971 ENGINEER JOSHUA G. DALTON
3/3/2015

DETAIL SHOWING WIDENING FOR TURN LANES AND U-TURN BULBS

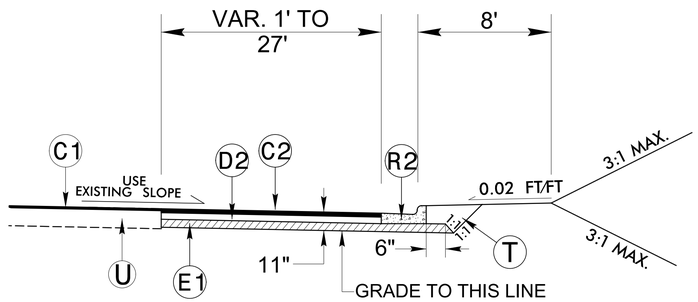

USE AT THE FOLLOWING LOCATIONS:

-L- STA 29+10.00 TO STA 29+50.00 (RT)
-L- STA 46+65.50 TO STA 47+64.09 (LT)
-Y- STA 17+28.19 TO STA 17+44.00 (RT)
-L- STA 67+74 TO STA 69+03.00 (LT)
-L- STA 68+85.00 TO STA 69+00.00 (RT)
-L- STA 43+37.62 TO STA 46+43.08 (RT)
-Y- STA 16+73.00 TO 17+19.00 (LT)
-L- STA 48+38.00 TO STA 53+90.90 (RT)
-L- STA 69+33.60 TO STA 69+43.60 (LT)
-L- STA 69+46.70 TO STA 69+80.90 (RT)

DETAIL SHOWING WIDENING FOR U-TURN BULB AT 22+50+/-

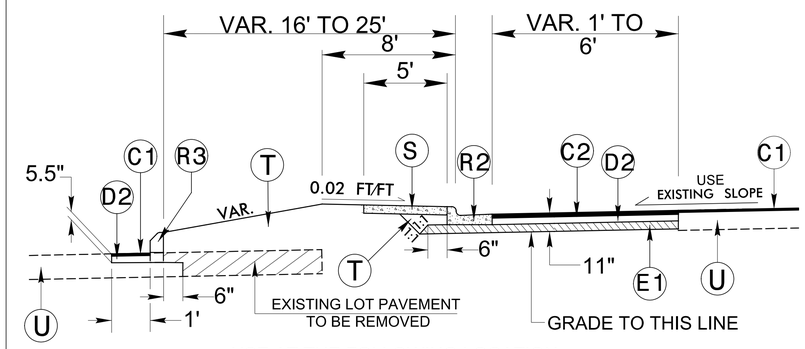

USE AT THE FOLLOWING LOCATION:

-L- STA 21+88 TO STA 22+75.60 (LT)

C1	1.5" S9.5C
C2	3.0" S9.5C
D2	4.0" I19.0C
E1	4.0" B25.0C
R2	PROPOSED 2'-6" CURB AND GUTTER
R3	PROPOSED 8"X12" CONCRETE CURB
R4	5" MONOLITHIC CONC. ISLAND (KEYED IN)
S	4" CONCRETE SIDEWALK
T	EARTH MATERIAL
U	EXISTING PAVEMENT
V1	MILLING 0" TO 1.5" REPLACE WITH 1.5" S9.5C

NOTE: PAVEMENT EDGE SLOPES ARE 1:1 UNLESS SHOWN OTHERWISE.

DETAIL SHOWING LEFT-OVER AT -L- STA. 29+00+/-

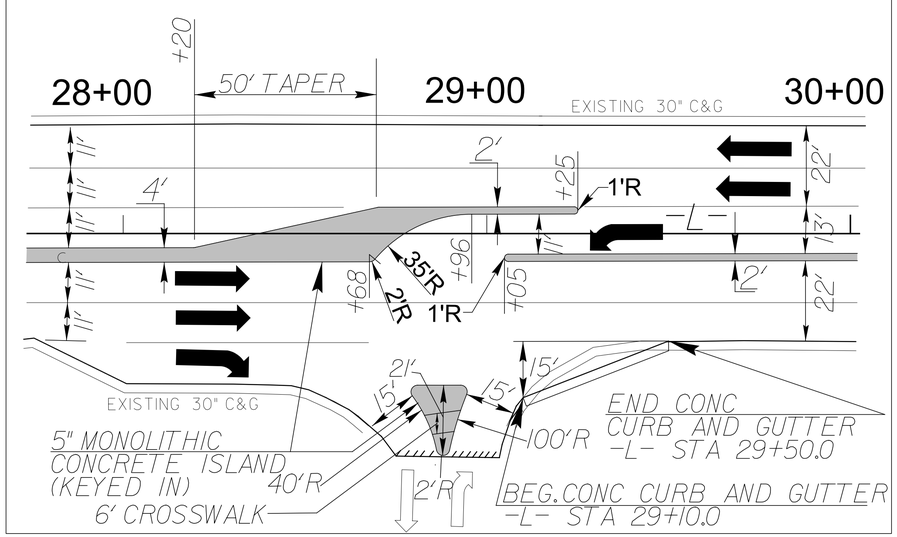

MILLING AT PAVEMENT TIE–INS

NOTES TO CONTRACTOR

For surface mixes over 1" in thickness, mill the existing pavement in accordance with the following sketch as directed by the Engineer.

Locations shall include ties into existing concrete pavement, at bridge approaches where the bridge will not be resurfaced, and at the beginning and ending point of each resurfacing map.

Perform the work in accordance with Section 607 of the January 2012 North Carolina Department of Transportation Standard Specifications for Roads and Structures. Resurfacing will be accomplished at the same time as the milling operation.

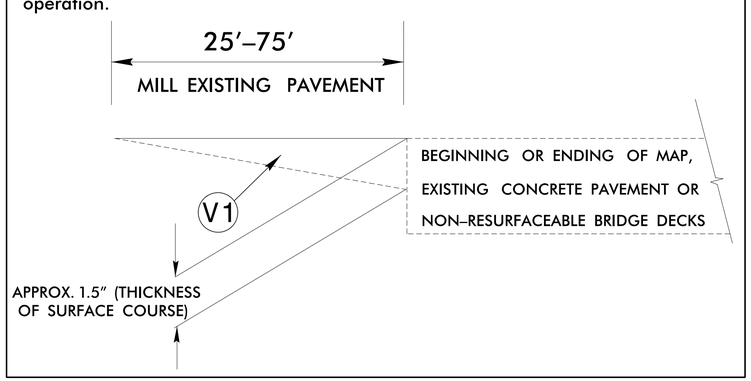

5/14/99

3/3/2015
W-5206AA_rdy_typ_02.dgn
bpeas

5/14/99

GEOTECHNICAL ENGINEER	ENGINEER
SIGNATURE DATE	SIGNATURE DATE

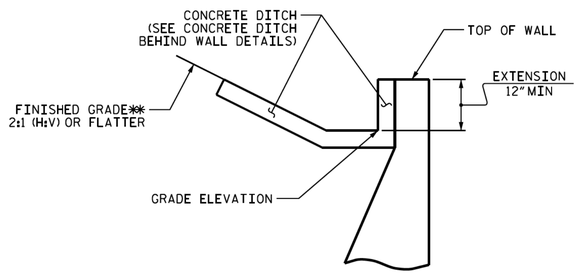

SLOPE CASE

**SEE ROADWAY PLANS FOR FINISHED GRADE AND DITCH DETAILS.

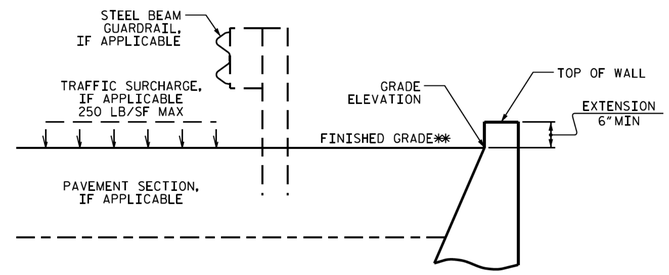

NO SLOPE CASE

**SEE ROADWAY PLANS FOR FINISHED GRADE DETAILS.

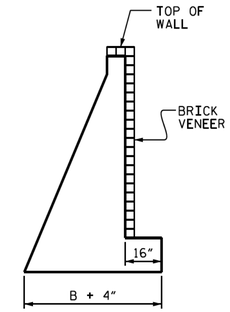

BRICK VENEER DETAIL

(WHEN APPLICABLE)

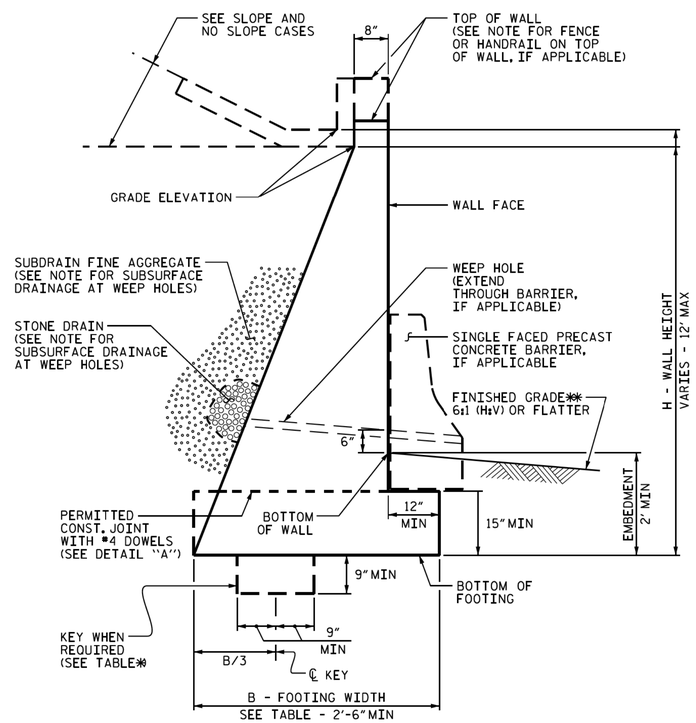

STANDARD CIP GRAVITY WALL

**SEE ROADWAY PLANS FOR FINISHED GRADE DETAILS.

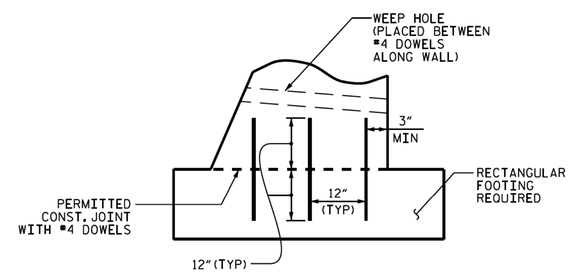

DETAIL "A"

H (FT)	3 - < 6	6 - 9	> 9 - 12
SLOPE CASE	.66	.70*	.75*
NO SLOPE CASE WITH TRAFFIC SURCHARGE	.80	.75*	.70*
NO SLOPE CASE WITHOUT TRAFFIC SURCHARGE	.60	.60	.60

B/H RATIO (B = 2'-6" MIN)

*KEY IS REQUIRED FOR "SLOPE CASE" OR "NO SLOPE CASE WITH TRAFFIC SURCHARGE" WHEN H IS 6' OR GREATER.

NOTES:

FOR STANDARD CAST-IN-PLACE (CIP) GRAVITY RETAINING WALLS, SEE CAST-IN-PLACE GRAVITY RETAINING WALLS PROVISION.

FOR STEEL BEAM GUARDRAIL, SEE ROADWAY PLANS AND SECTION 862 OF THE STANDARD SPECIFICATIONS.

FOR SINGLE FACED PRECAST CONCRETE BARRIER, SEE ROADWAY PLANS AND SECTION 857 OF THE STANDARD SPECIFICATIONS.

FOR FENCES OR HANDRAILS ON TOP OF WALLS, SEE ROADWAY PLANS FOR FENCE OR HANDRAIL ATTACHMENT DETAILS.

FOR SUBSURFACE DRAINAGE AT WEEP HOLES, SEE ARTICLE 414-8 OF THE STANDARD SPECIFICATIONS.

STANDARD CIP GRAVITY WALLS ARE BASED ON THE FOLLOWING IN-SITU ASSUMED SOIL PARAMETERS:
UNIT WEIGHT, γ = 120 LB/CF
FRICTION ANGLE, ϕ = 35 DEGREES
(GROUNDWATER WITHIN 7' OF BOTTOM OF FOOTING)
FRICTION ANGLE, ϕ = 30 DEGREES
(GROUNDWATER MORE THAN 7' BELOW BOTTOM OF FOOTING)
COHESION, c = 0 LB/SF

DO NOT USE STANDARD CIP GRAVITY WALLS IF ASSUMED SOIL PARAMETERS ARE NOT APPLICABLE OR GROUNDWATER IS ABOVE BOTTOM OF FOOTING.

DO NOT USE STANDARD CIP GRAVITY WALLS WHEN VERY LOOSE OR SOFT SOIL OR MUCK IS BELOW WALLS.

BEFORE BEGINNING STANDARD CIP GRAVITY WALL CONSTRUCTION, SURVEY WALL LOCATIONS AND SUBMIT WALL PROFILE VIEWS (WALL ENVELOPES) FOR REVIEW. FOR WALL ENVELOPES, INCLUDE BOTTOM OF WALL, EXISTING GROUND AND GRADE ELEVATIONS AND OTHER ELEVATIONS AS NEEDED AT INTERVALS OF 25' OR LESS ALONG WALLS. DO NOT START WALL CONSTRUCTION UNTIL WALL ENVELOPES ARE ACCEPTED.

FOR BRICK VENEERS, SUBMIT BRICK SAMPLES FOR APPROVAL BEFORE BEGINNING STANDARD CIP GRAVITY WALL CONSTRUCTION.

DO NOT PLACE CONCRETE FOR FOOTINGS UNTIL EXCAVATION DIMENSIONS AND FOUNDATION MATERIAL ARE APPROVED.

WHEN CONSTRUCTING STANDARD CIP GRAVITY WALLS WITH A CONSTRUCTION JOINT AS SHOWN IN DETAIL "A", PROVIDE A MINIMUM OF 3 EQUALLY SPACED #4 DOWELS AT INTERVALS OF 1'-6" ALONG WALLS.

PROJECT NO.: W-5206AA
Cumberland ***COUNTY***
STATION: 10+70 to 11+12
SHEET 1 OF 1

GEOTECHNICAL ENGINEERING UNIT

STATE OF NORTH CAROLINA DEPARTMENT OF TRANSPORTATION RALEIGH

STANDARD DRAWING NO. 453.01

STANDARD
CAST-IN-PLACE (CIP)
GRAVITY RETAINING WALL

DATE: 1-21-14

SHEET NO. 2-D
TOTAL SHEETS

PROJECT REFERENCE NO.	SHEET NO.
W-5206AA	2-E
R/W SHEET NO.	

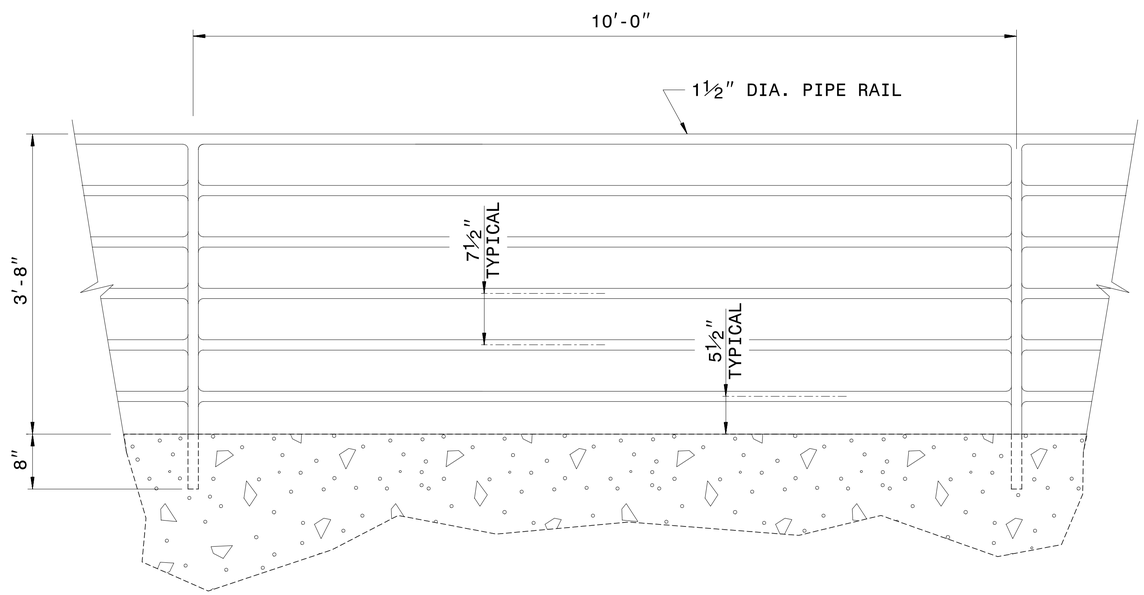

ELEVATION OF HANDRAIL

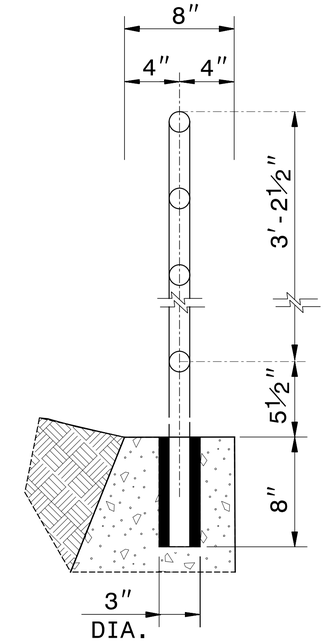

INSET 'A'

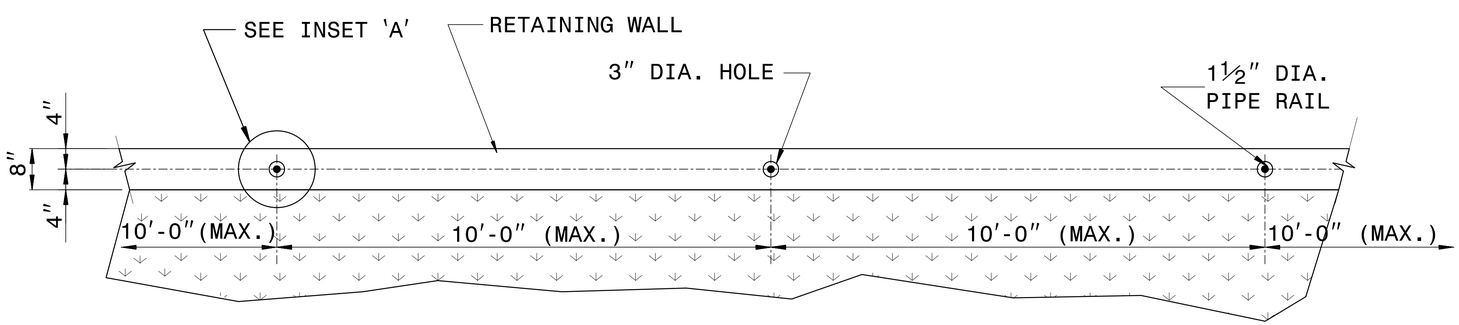

PLAN VIEW

NOTES:

PROPOSED STEEL PIPE RAIL SHALL BE CONSTRUCTED OF 1½" DIAMETER SCHEDULE 40 PLAIN END GALVANIZED STEEL PIPE MEETING THE REQUIREMENTS OF ASTM A53.

PIPE RAIL SHALL BE EMBEDDED 8" INTO PROPOSED WALL WITH CHEMICAL OR CONCRETE GROUT ANCHORING SYSTEM AS DIRECTED BY THE ENGINEER.

REPAIR OF GALVANIZING SHALL BE IN ACCORDANCE WITH SECTION 1076 OF THE NCDOT STANDARD SPECIFICATIONS.

PAINTING, IF REQUIRED BY THE ENGINEER, SHALL BE IN ACCORDANCE WITH SECTION 1080 OF THE STANDARD SPECIFICATIONS.

THE PROPOSED RAILING SHALL BE CENTERED ON TOP OF THE WALL WITH POST SPACING SYMMETRICAL ABOUT THE CENTER-LINE OF THE WALL.

HOLES FOR EMBEDMENT OF RAIL IN WALL SHALL BE MADE WITH A ROTARY DRILL ONLY (NO ROTARY-IMPACT DRILLS).

WELDING SHALL BE DONE IN ACCORDANCE WITH ARTICLE 1072-20 OF THE STANDARD SPECIFICATIONS.

SEE SHEET 2-D FOR RETAINING WALL

CONTRACT STANDARDS AND DEVELOPMENT UNIT
Office 919-707-6950 FAX 919-250-4119

DETAIL OF PIPE HANDRAIL MOUNTED ON RETAINING WALL

ORIGINAL BY: E.E. WARD DATE: 12-99
MODIFIED BY: DATE:
CHECKED BY: DATE:
FILE SPEC.: jhowerton/handrail on retaining wall.dgn

5/14/99
3/2/2015
W5206AA_rdy_typ_02.dgn
bpeas@ncdot.gov
W5206AA_rdy_typ_02.dgn
bpeas

5/9/06

COMPUTED BY: Joshua G. Dalton, PE DATE: 1/12/2015

CHECKED BY: DATE:

NORTH CAROLINA DEPARTMENT OF TRANSPORTATION
DIVISION OF HIGHWAYS

PROJECT NO.	SHEET NO.
W-5206AA	3-A

Note: Invert Elevations indicated are for Bid Purposes only and shall not be used for project construction stakeout. See "Standard Specifications For Roads and Structures, Section 300-5".

Choose Project Tier

LIST OF PIPES, ENDWALLS, ETC. (FOR PIPES 48 INCHES & UNDER)

ABBREVIATIONS

C.B. CATCH BASIN
N.D.I. NARROW DROP INLET
D.I. DROP INLET
G.D.I. GRATED DROP INLET
G.D.I.(N.S.) (NARROW SLOT)
J.B. JUNCTION BOX
M.H. MANHOLE
T.B.D.I. TRAFFIC BEARING DROP INLET
T.B.J.B. TRAFFIC BEARING JUNCTION BOX

STATION / SIZE	LOCATION (LT, RT, OR CL)'	STRUCTURE NO. FROM	STRUCTURE NO. TO	TOP ELEVATION	INVERT ELEVATION	INVERT ELEVATION	SLOPE CRITICAL	DRAINAGE PIPE (RCP, CSP, CAAP, HDPE, or PVC) 12"	15"	18"	24"	30"	36"	42"	48"	DO NOT USE RCP	DO NOT USE CSP	DO NOT USE CAAP	DO NOT USE HDPE	C.S. PIPE 12"	15"	18"	24"	30"	36"	42"	48"	R.C. PIPE CLASS III 12"	15"	18"	24"	30"	36"	42"	48"	R.C. PIPE CLASS IV 12"	15"	18"	24"	30"	36"	42"	48"	** " R.C. PIPE (CLASS V)	****" RC PIPE CULVERTS, CONTRACTOR DESIGN	****" RC PIPE CULVERTS, CONTRACTOR DESIGN	15" SIDE DRAIN PIPE	18" SIDE DRAIN PIPE	ENDWALLS STD. 838.01 838.11 OR STD. 838.80 (UNLESS NOTED OTHERWISE) CU. YARDS R.C.P.	C.S.P.	QUANTITIES FOR DRAINAGE STRUCTURES PER EACH (0' THRU 5.0')	*TOTAL L.F. FOR PAY QUANTITY SHALL BE COL. 'A' + (1.3 X COL.'B') LIN. FT. A 5.0' THRU 10.0'	B 10.0' AND ABOVE	C.B. STD. 840.01 OR STD. 840.02	FRAME, GRATES, AND HOOD STANDARD 840.03 TYPE OF GRATE E	F	G	CONCRETE TRANSITIONAL SECTION DROP INLET	CATCH BASIN	D.I. STD. 840.14 OR STD. 840.15	D.I. FRAME AND GRATE STD. 840.16	G.D.I. TYPE "A" STD. 840.17 OR 840.26	G.D.I. TYPE "B" STD. 840.18 OR 840.27	G.D.I. TYPE "D" STD. 840.19 OR 840.28	G.D.I. FRAME WITH GRATE STD. 840.20	G.D.I. FRAME WITH TWO GRATES STD. 840.22	G.D.I. (N.S.) FRAME WITH GRATE STD. 840.24	G.D.I. (N.S.) FRAME WITH TWO GRATES STD. 840.24	J.B. STD. 840.31 OR 840.32	T.B.J.B. STD. 840.34	M.H. FRAME AND COVER STD. 840.54	T.B.D.I. STD. 840.35		DRAINAGE PIPE ELBOWS NO. & SIZE	CONC. & BRICK PIPE PLUG, C.Y. STD. 840.71	CONC. COLLARS CL. "B" C.Y. STD. 840.72	PIPE REMOVAL LIN. FT.	REMARKS
THICKNESS OR GAUGE																				.064	.064	.064	.064	.079	.079	.109	.109																																																			
10+91 -L-	RT	401		165.3																																															1							1		1	1																	
		401	402		162.1	159.0																														28																																										
10+91 -L-	RT	402		164.7																																															1	1																		1	1								REMOVE CB AND INSTALL TBJB W/ MH
10+65 -L-	RT	403		163.2	157.3																																														1	0.9		1			1																					
15+85 -L-	RT	404		181.2																																															1							1		1	1																0.399		REMOVE DI, COLLAR AND EXTEND
		404	405		178.2	178.05																														8																																										
20+50 -L-	LT	406		183.1																																															1							1		1	1																		
		406	501		180.1	179.7																														152																																										
21+95 -L-	LT	501		182.7																																															1							1		1	1																		
		501	507		179.7	178.0																														28																																										
21+95 -L-	LT	507		181.0																																															1			1			1																						
		507	502		178.0	177.9																														32																																										
22+25 -L-	LT	502		180.6																																															1			1			1																						
		502	503		177.9	177.8																														40																																										
22+65 -L-	LT	503		180.7																																															1			1			1																						
		503	506		177.8	177.7																														8																																							0.399		REMOVE CB, COLLAR AND EXTEND
24+61 -L-	RT	504		183.2																																															1							1		1	1																		
		504	505		180.2	176.0																														48																																										
44+97 -L-	RT	601		163.2																																															1									1	1																		
		601	602		160.9	160.2			12																																																																							
44+97 -L-	RT	602		163.2																																															1			1		1																							
		602	603		160.2	159.6																														12																																							0.399		REMOVE CB, COLLAR AND EXTEND
45+54 -L-	RT	604		163.2																																															1									1	1																		
		604	605		160.9	159.6			12																																																																							
45+54 -L-	RT	605		163.0																																															1			1		1																						REMOVE DI, INSTALL CB
17+20 -Y-	RT	701		163.6																																															1			1	1																								
		701	702		160.6	160.0																														28																																										
48+32 -L-	RT	702		162.8																																															1			1	1																								
		702	703		160.0	159.9																															8																																									REMOVE EXIST. CB, COLLAR AND EXTEND 18"
48+24 -L-	RT	703																																																																												0.447		
47+25 -L-	LT	704		160.7																																															1			1			1																						
		704	EX		157.7	157.5																														44																																										
50+50 -L-	RT	705		162.8																																															1									1	1																		
		705	706		160.5	158.1			16																																																																							
50+50 -L-	RT	706		162.8	158.1																																														1																				1	1								REMOVE DI, INSTALL TBJB W/ MH
15+83 -Y-	LT	707		165.6																																															1			1			1																						
		707	708		162.6	160.3																														80																																										
16+57 -Y-	LT	708		164.7	160.0																																														1			1			1																						REMOVE EXIST. DI AND EST. 19LF 18" RCP
15+83 -Y-	RT	709		165.6																																															1			1		1																							
		709	710		162.6	161.3																														68																																										
16+53 -Y-	RT	710		164.3																																															1			1		1																							
		710	708		161.3	160.3																														48																																										
68+81 -L;-	LT	801		129.1	126.1																																														1			1			1																						
		801	802		126.1	125.5																														28																																										
68+81 -L-	LT	802		129.8	123.9																																														1	0.9																		1	1								TBJB LOC. AND DEPTH TO BE FIELD ADJUSTED
15+00 -Y-	RT	901		167.1																																															1			1		1																							
		901	709		164.1	162.6																														80																																										
SHEET TOTALS									40																											732	8														26	2.8		15	2	5	8	5		8	8									3	3					1.644		

3/2/2015
W5206AA_rdy_psh_03A_summary.dgn
bpease

SUMMARY OF EARTHWORK

IN CUBIC YARDS

STATION	STATION	UNCLASSIFIED EXCAVATION	EMBT+%	BORROW	WASTE
–L– 10+51.58	–L– 11+21.0 (RT)	58	0		58
–L– 21+88.0	–L– 22+75.6 (LT)	20	40	20	
–L– 29+10.0	–L– 29+50.0 (RT)	8	0		8
–L– 43+37.62	–L– 46+43.08 (RT)	182	3		179
–L– 46+65.5	–L– 47+64.09 (LT)	60	4		56
–L– 48+17.0	–L– 53+90.9 (RT)	479	13		466
–L– 67+74.0	–L– 69+03.0 (LT)	121	19		102
–L– 69+46.7	–L– 69+80.9 (RT)	3	3		
–Y– 10+40.0	–Y– 17+19.0	706	134		572
TOTALS		1637	216	20	1441
WASTE IN LIEU OF BORROW:				–20	–20
TOTALS		1637	216	0	1421
SAY		1650		0	

NOTE: APPROXIMATE QUANTITIES ONLY. UNCLASSIFIED EXCAVATION, SHOULDER BORROW, FINE GRADING, CLEARING AND GRUBBING, AND REMOVAL OF EXISTING PAVEMENT WILL BE PAID FOR AT THE CONTRACT LUMP SUM PRICE FOR "GRADING."

PARCEL INDEX SUMMARY

PARCEL NUMBER	SHEET NUMBER	PROPERTY OWNER NAME
1	4	MCDONALDS REAL ESTATE CO.
1–A	4	BAYNE ENTERPRISES, INC
2	5	FRANGOS, SOTERIOS & WIFE
3	6	NELSON AND NELSON PROPERTIES INC
4	6	DONALD L & DONNA J WELLINGTON
5	6	TERRY DON OGERLY
6	6	CHARLOTTE & ENRIQUE MCKENZIE
7	6–7	GODFREY ONIME
8	7	VICTORIA D BOBSON
9	7	UNITED STATES POSTAL SERVICE
10	7	CAROLINA TELEPHONE & TELEGRAPH CO
11	7–9	REEVES–BULLA FUNERAL HOMES INC
12	7	CONGREGATIONAL CHRISTIAN CHURCH
13	7	LARRY F & MARY L NUNNERY
14	8	MML & ASSOCIATES
15 (NO CLAIM)	8	PANTRY INC. (NO CLAIM)
16	8	LUMBEE GUARANTY BANK

DocuSign Envelope ID: 74E39D82-A6A7-4D61-B54D-3DFC40107626

PROJECT REFERENCE NO.	SHEET NO.
W-5206AA	4
R/W SHEET NO.	
ROADWAY DESIGN ENGINEER	HYDRAULICS ENGINEER
jgoodnight@vhb.com	3/3/2015

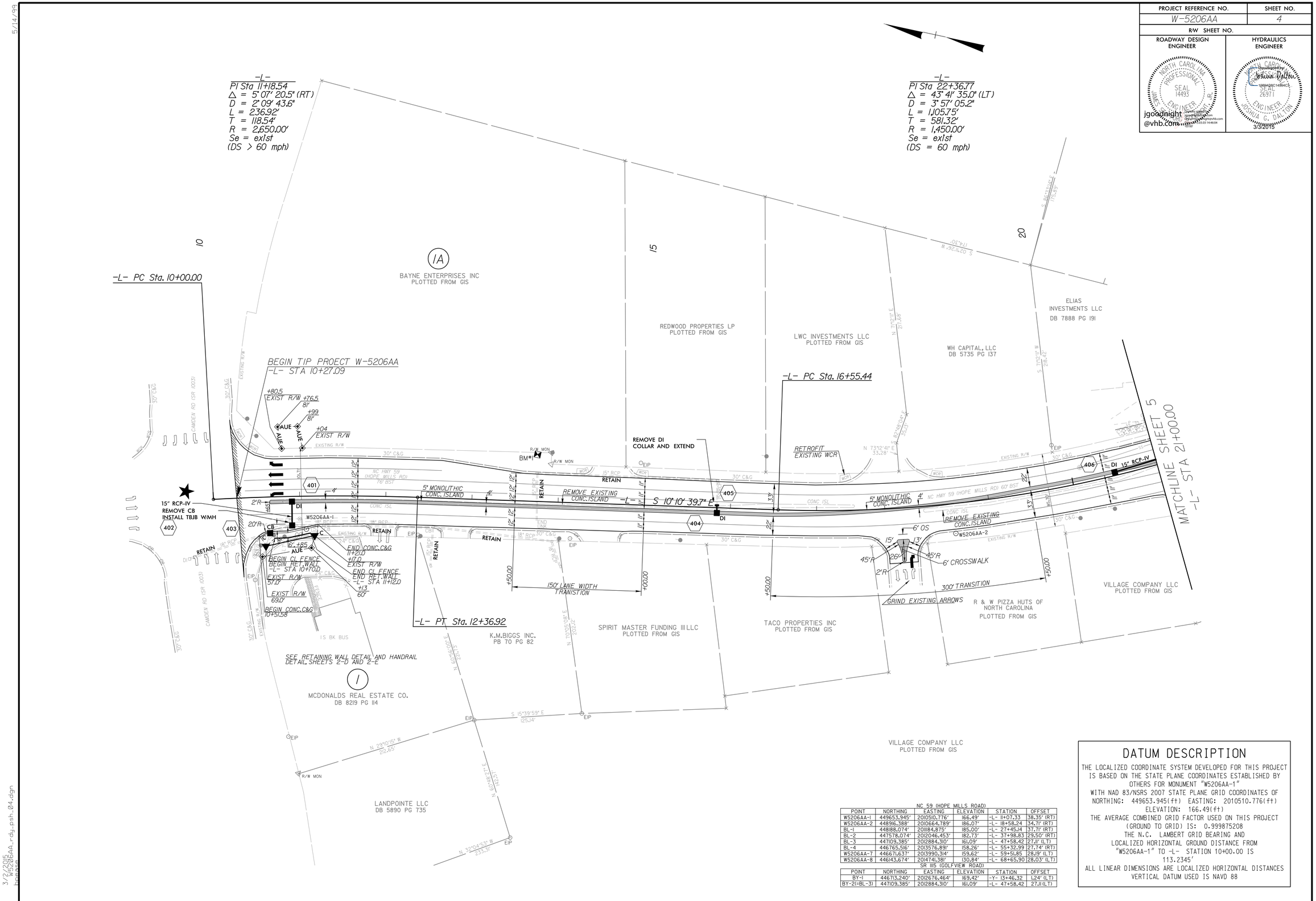

NC 59 (HOPE MILLS ROAD)

POINT	NORTHING	EASTING	ELEVATION	STATION	OFFSET
W5206AA-1	449653.945'	2010510.776'	166.49'	-L- 11+07.33	38.35' (RT)
W5206AA-2	448916.388'	2010664.789'	186.07'	-L- 18+58.24	34.71' (RT)
BL-1	448188.074'	2011184.875'	185.00'	-L- 27+45.14	37.71' (RT)
BL-2	447578.074'	2012046.453'	182.73'	-L- 37+98.83	29.50' (RT)
BL-3	447109.385'	2012884.310'	161.09'	-L- 47+58.42	27.11' (LT)
BL-4	446765.516'	2013576.891'	158.26'	-L- 55+32.99	27.74' (RT)
W5206AA-7	446671.637'	2013990.314'	159.62'	-L- 59+51.85	28.19' (LT)
W5206AA-8	446143.674'	2014741.381'	130.84'	-L- 68+65.90	28.03' (LT)

SR 1115 (GOLFVIEW ROAD)

POINT	NORTHING	EASTING	ELEVATION	STATION	OFFSET
BY-1	446713.240'	2012676.464'	169.42'	-Y- 13+46.32	1.24' (LT)
BY-2(=BL-3)	447109.385'	2012884.310'	161.09'	-L- 47+58.42	27.11 (LT)

DATUM DESCRIPTION

THE LOCALIZED COORDINATE SYSTEM DEVELOPED FOR THIS PROJECT IS BASED ON THE STATE PLANE COORDINATES ESTABLISHED BY OTHERS FOR MONUMENT "W5206AA-1"
WITH NAD 83/NSRS 2007 STATE PLANE GRID COORDINATES OF
NORTHING: 449653.945(ft) EASTING: 2010510.776(ft)
ELEVATION: 166.49(ft)
THE AVERAGE COMBINED GRID FACTOR USED ON THIS PROJECT (GROUND TO GRID) IS: 0.999875208
THE N.C. LAMBERT GRID BEARING AND LOCALIZED HORIZONTAL GROUND DISTANCE FROM "W5206AA-1" TO -L- STATION 10+00.00 IS 113.2345'
ALL LINEAR DIMENSIONS ARE LOCALIZED HORIZONTAL DISTANCES
VERTICAL DATUM USED IS NAVD 88

5/14/99

3/2/2015
R5206AA_rdy_psh_04.dgn
bbaker

DocuSign Envelope ID: 74E39D82-A6A7-4D61-B54D-3DFC40107626

PROJECT REFERENCE NO.	SHEET NO.
W-5206AA	5
R/W SHEET NO.	
ROADWAY DESIGN ENGINEER	HYDRAULICS ENGINEER
NORTH CAROLINA PROFESSIONAL SEAL 14493 ENGINEER JAMES STANLEY GOODNIGHT, JR.	NORTH CAROLINA PROFESSIONAL SEAL 26971 ENGINEER JOSHUA G. DALTON
jgoodnight@ncdot.gov DocuSigned by: 4B9A2D8C1494403... Date: 2015.03.03 14:46:34 -05'00'	DocuSigned by: Joshua Dalton 1D8B4A2D8C1494403... 3/3/2015

-L-
PI Sta 22+36.77
Δ = 43° 41' 35.0" (LT)
D = 3° 57' 05.2"
L = 1,105.75'
T = 581.32'
R = 1,450.00'
Se = exist
(DS = 60 mph)

S 31°32'13" E 126.49'
S 53°47'06" E 321.93'
S 37°20'45" W 422.31'
S 53° 52' 14.7" E

REMOVE EXISTING ASPHALT PAVEMENT

FRANGOS, SOTERIOS & WIFE DB 5003 PG 141
SOTOS INVESTMENTS LLC DB 9085 PG 255
ELIAS INVESTMENTS LLC DB 7888 PG 191
SEF LEASING, LLC DB 9085 PG 255
FRANGOS, SOTERIOS & WIFE DB 9085 PG 257
JANET R WILLIAMS PLOTTED FROM GIS
JANET R TILLEY PLOTTED FROM GIS
HCC INVESTMENTS LLC PLOTTED FROM GIS
GEORGE & JANET TILLEY PLOTTED FROM GIS
HAWKEYE ENTERPRISE LLC PLOTTED FROM GIS
WAL-MART REAL ESTATE BUSINESS TRUST DB 5771 PG 92
MURPHY OIL USA INC DB 7895 PG 1
TRACY M SMITH TRUSTEE DB 8511 PG 71
AUTOZONE INC DB 5822 PG 420
RTM OPERATING CO LLC DB 8062 PG 77
LOWES HOME CENTERS INC DB 8151 PG 137

MATCHLINE SHEET 4 -L- STA 21+00.00
MATCHLINE SHEET 6 -L- STA 33+00.00

+85 EXIST R/W
BEGIN CONC.C&G & SIDEWALK -L- STA 21+88 +09 5'
BEGIN 8"X12" CONC.CURB TIE TO EXISTING CURB -L- STA 22+09
REMOVE EXISTING ASPHALT PAVEMENT EXIST SIGN TO BE MOVED BY OTHERS
+75.6 EXIST.R/W. 58'
END 2'-6" CONC.C&G, 4" CONC. SIDEWALK & 8"X12" CONC CURB -L- STA 22+75.6
15" RCP-IV
507 502 503 506 501 505 504
CB DI CR
10'R 25'R 6'R 2'R 40'R 100'R
RETAIN
REMOVE EXISTING CONC.ISLAND
5' MONOLITHIC CONC. ISLAND
REMOVE EXIST. CB COLLAR AND EXTEND 15" RCP-IV
EXIST.MARKINGS
GRIND EXISTING ARROWS
6' CROSSWALK
225' TRANSITION
+00.00 +25.00 +80.00
INSTALL 2 FT WIDE GAP IN ISLAND ON 50 FT CENTERS STA 25+50 TO STA 28+00 -L-
INSTALL 2 FT WIDE GAP IN ISLAND AT SAG
-L- PT Sta. 27+61.19
BM#2
50' TAPER
150' TAPER
END UNK 15" RCP
INSTALL 2 FT WIDE GAPS IN ISLAND ON 50 FT CENTERS STA 29+55 TO STA 47+05 -L-
END CONC.CURB AND GUTTER -L- STA 29+50.0
BEGIN CONC.CURB AND GUTTER -L- STA 29+10.0
SEE SHEET 2C FOR DETAIL SHOWING LEFT-OVER AT -L- STA 29+00
POETRY LANE
BUTLER ST. 16" BST
R/W MON
EIP
BST
JB2
EXISTING R/W

3/2/2015
W5206AA_rdy_psh_05.dgn
hcrase

DocuSign Envelope ID: 74E39D82-A6A7-4D61-B54D-3DFC40107626

PROJECT REFERENCE NO.	SHEET NO.
W-5206AA	6
R/W SHEET NO.	
ROADWAY DESIGN ENGINEER	HYDRAULICS ENGINEER
jgoodnight@vhb.com	3/3/2015

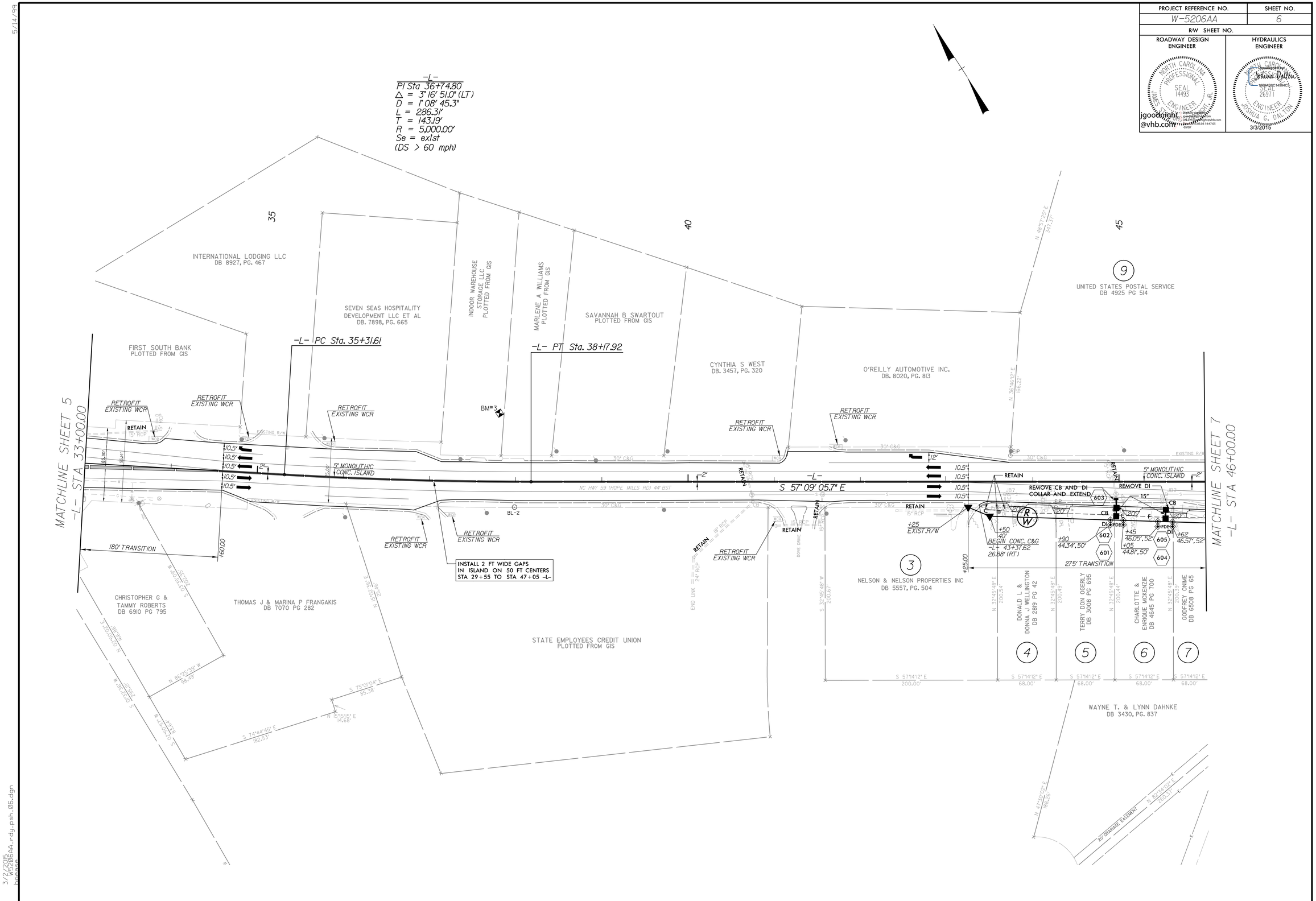

5/14/99

3/3/2015
W-5206AA_rdy_psh_06.dgn
hcrews

DocuSign Envelope ID: 74E39D82-A6A7-4D61-B54D-3DFC40107626

5/14/99

PROJECT REFERENCE NO.	SHEET NO.
W-5206AA	7
R/W SHEET NO.	
ROADWAY DESIGN ENGINEER	HYDRAULICS ENGINEER

NORTH CAROLINA PROFESSIONAL SEAL 14493 ENGINEER JAMES A. GOODMAN, JR.
jgoodman@ncdot.gov
DocuSigned by: Jamie A. Goodman, Jr. 10B4D6C1A9D4C2... Date: 2015.03.03 14:47:46 -05'00'

NORTH CAROLINA PROFESSIONAL SEAL 26971 ENGINEER JOSHUA G. DALTON
DocuSigned by: Joshua Dalton 1D8BADBC1A9D4C2...
3/3/2015

-L-
PI Sta 49+42.63
Δ = 14° 07' 45.2" (LT)
D = 2° 07' 19.4"
L = 665.82'
T = 334.61'
R = 2,700.00'
Se = ex1st
(DS > 60 mph)

-Y-
PI Sta 15+05.20
Δ = 42° 41' 26.6" (RT)
D = 16° 22' 12.8"
L = 260.78'
T = 136.78'
R = 350.00'
Se = ex1st
(DS = 30 mph)

-Y-
PI Sta 17+18.45
Δ = 19° 06' 07.7" (LT)
D = 28° 38' 52.4"
L = 66.68'
T = 33.65'
R = 200.00'
Se = ex1st
(DS = 25 mph)

-L-
PI Sta 60+37.86
Δ = 18° 52' 07.7" (RT)
D = 3° 16' 26.6"
L = 576.31'
T = 290.79'
R = 1,750.00'
Se = ex1st
(DS = 60 mph)

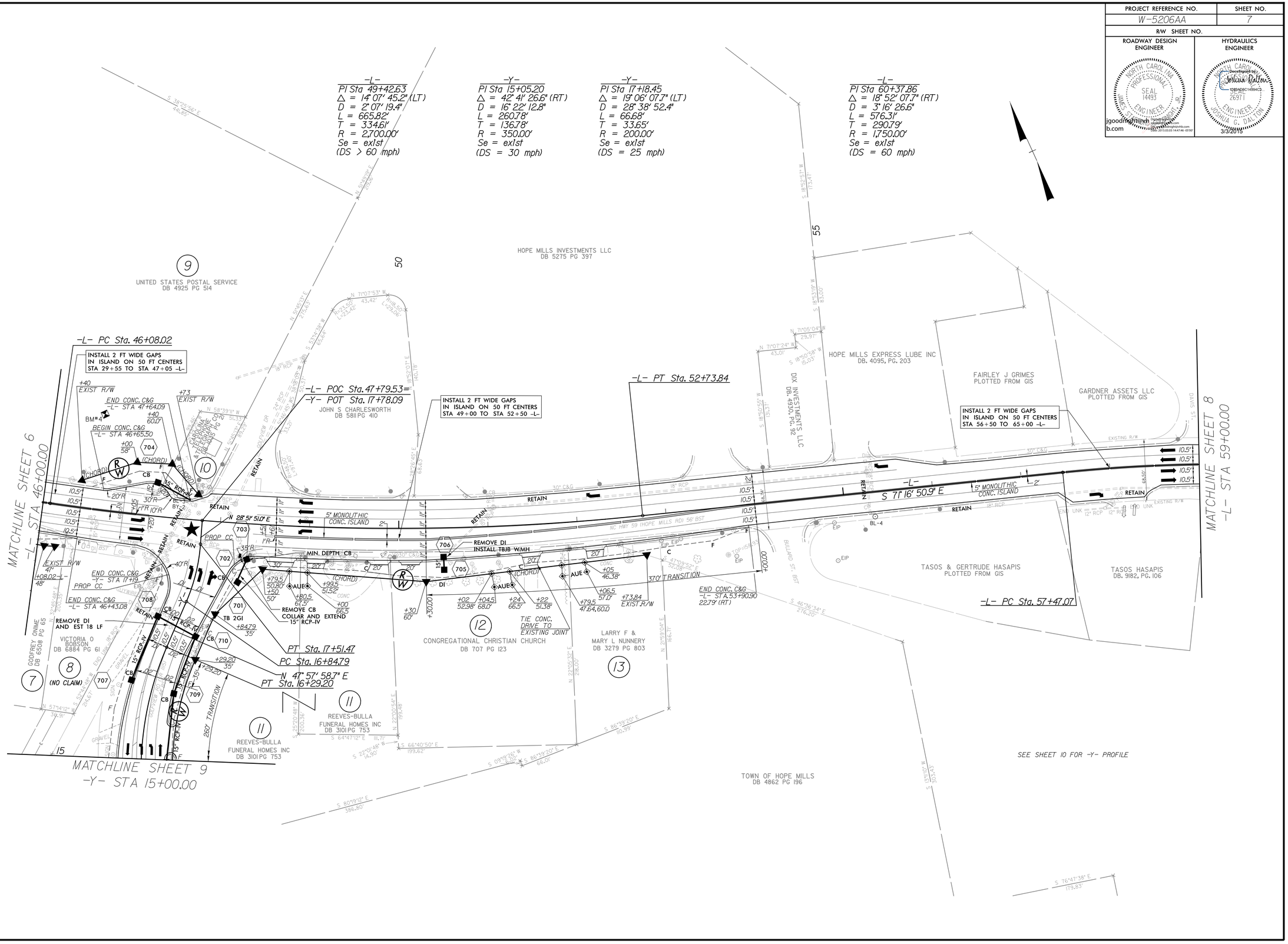

3/3/2015
W-5206AA_rdy_psh_07.dgn
bpeace

DocuSign Envelope ID: 74E39D82-A6A7-4D61-B54D-3DFC40107626

PROJECT REFERENCE NO.	SHEET NO.
W-5206AA	8
R/W SHEET NO.	
ROADWAY DESIGN ENGINEER	HYDRAULICS ENGINEER

NORTH CAROLINA PROFESSIONAL SEAL 14493 ENGINEER JAMES A. JOHNSON, JR.
jgoadnight@vhb.com
DocuSigned by: Jerline Dalton 1C6BA0BC149043... 3/3/2015

NORTH CAROLINA PROFESSIONAL SEAL 26971 ENGINEER JOSHUA G. DALTON
DocuSigned by: Joshua Dalton 1C6BA0BC149043... 3/3/2015

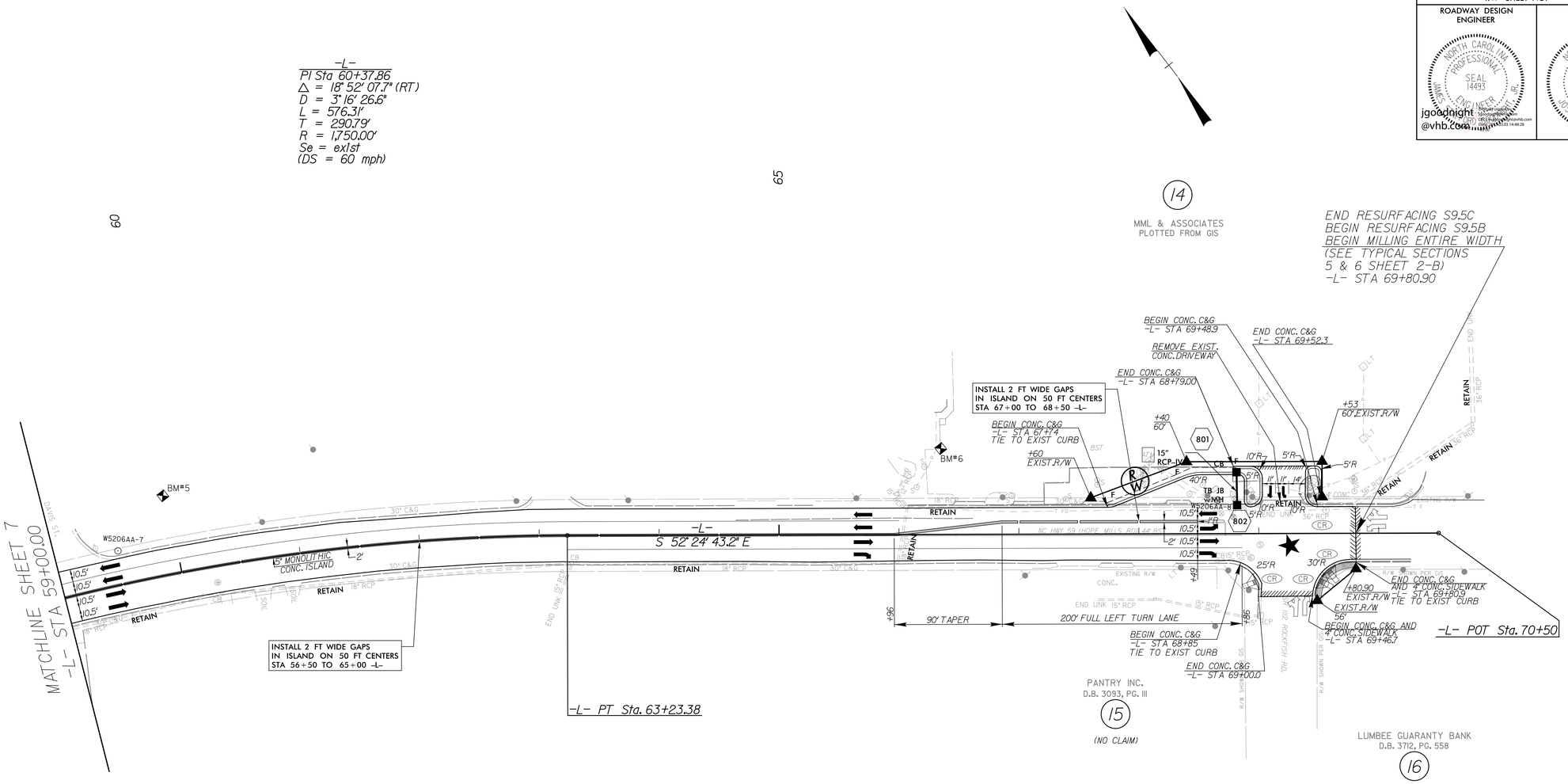

5/14/99
3/3/2015
W5206AA_rdy_psh_08.dgn
bmasse

DocuSign Envelope ID: 74E39D82-A6A7-4D61-B54D-3DFC40107626

5/14/99

PROJECT REFERENCE NO.	SHEET NO.
W-5206AA	9
R/W SHEET NO.	
ROADWAY DESIGN ENGINEER	HYDRAULICS ENGINEER

NORTH CAROLINA PROFESSIONAL SEAL 14493 ENGINEER JAMES C. GOODNIGHT, JR.
jgoodnight@ncdot.gov
hb.com

DocuSigned by: Joshua Dalton CERTIFICATE: 14904C3 SEALED BY: Joshua Dalton, PE DATE: 3/3/2015 14:49:05 -05'00'
NORTH CAROLINA PROFESSIONAL SEAL 26971 ENGINEER JOSHUA G. DALTON
3/3/2015

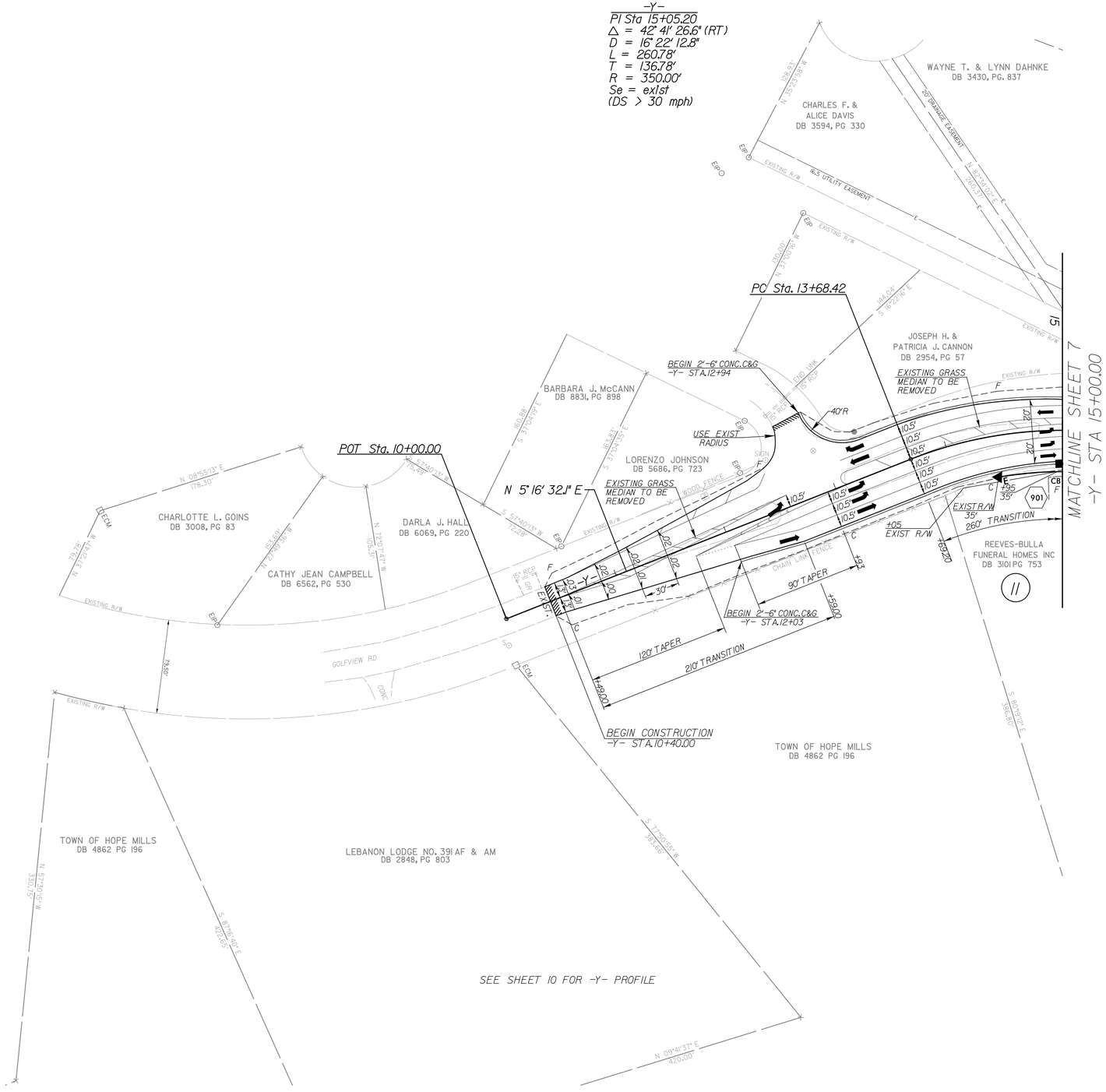

3/3/2015
W5206AA_rdy_psh_09.dgn
hbrase

DocuSign Envelope ID: D3B54495-A444-436F-82DE-258C06394570

5/28/99

PROJECT REFERENCE NO.	SHEET NO.
W-5206AA	10

ROADWAY DESIGN ENGINEER

NORTH CAROLINA PROFESSIONAL SEAL 14493 ENGINEER JAMES STEVENS GOODNIGHT, JR.

jgoodnight@vhb.com
DocuSigned by: James Stevens Goodnight, Jr.
E3A1F1A3A0A0A3A...
Email: jgoodnight@vhb.com
Date: 2015.03.03 14:49:42 -05'00'

HYDRAULICS ENGINEER

NORTH CAROLINA PROFESSIONAL SEAL 26971 ENGINEER JOSHUA G. DALTON

DocuSigned by: Joshua Dalton
C08A3DEC1A5B4C3...
3/3/2019

-Y-
GOLFVIEW RD

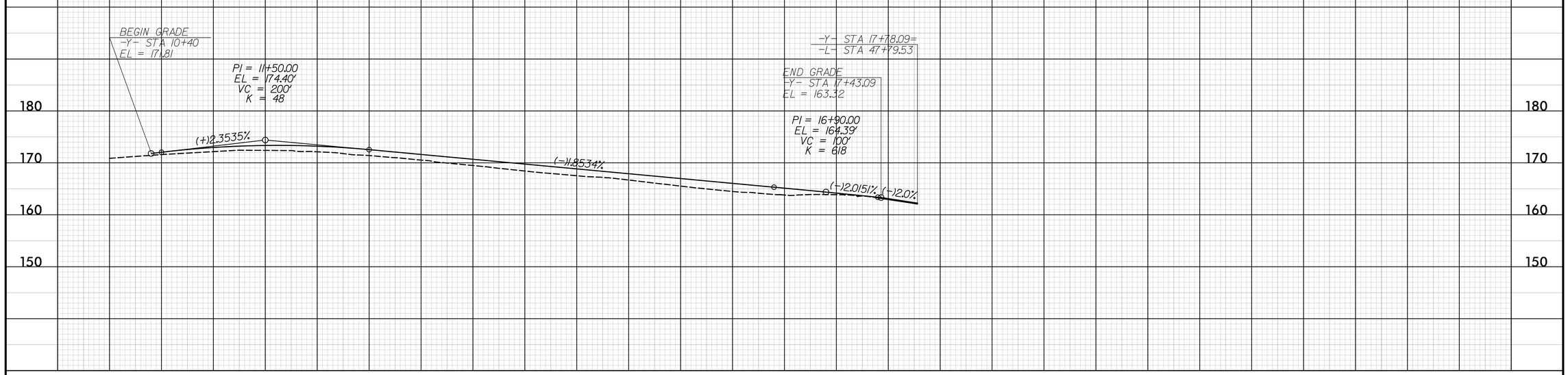

3/3/2015
W5206AA_rdy_psh_10.dgn
bpeace

STATE OF NORTH CAROLINA
DIVISION OF HIGHWAYS

TRANSPORTATION MANAGEMENT PLAN

CUMBERLAND COUNTY

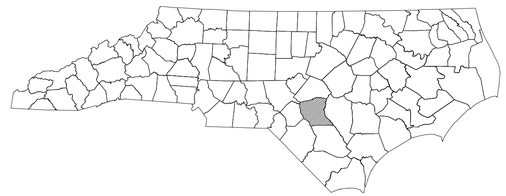

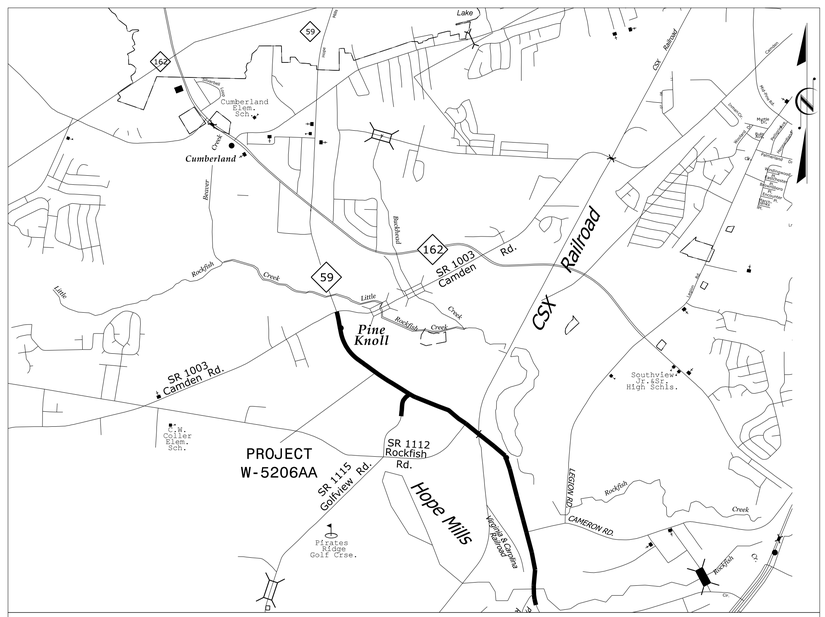

VICINITY MAP

INDEX OF SHEETS

SHEET NO.	TITLE
TMP-1	TITLE SHEET, VICINITY MAP AND INDEX OF SHEETS
TMP-1A	LIST OF APPLICABLE ROADWAY STANDARD DRAWINGS AND LEGEND
TMP-2A THRU TMP-2B	TRANSPORTATION OPERATIONS PLAN: (MANAGEMENT STRATEGIES, GENERAL NOTES AND LOCAL NOTES)
TMP-3	TEMPORARY TRAFFIC CONTROL PHASING
TMP-4 THRU TMP-5	TEMPORARY TRAFFIC CONTROL PHASE I DETAIL
TMP-6 THRU TMP-13	TEMPORARY TRAFFIC CONTROL PHASE II DETAIL

SHEET NO.
TMP-1

W-5206AA

TIP PROJECT:

vhb
4000 WestChase Boulevard, Suite 530 Raleigh, NC 27607
NC License No. C-3705

WORK ZONE SAFETY & MOBILITY
"from the MOUNTAINS to the COAST"

N.C.D.O.T. WORK ZONE TRAFFIC CONTROL
1561 MAIL SERVICE CENTER (MSC) RALEIGH, NC 27699-1561
750 N. GREENFIELD PARKWAY, GARNER, NC 27529 (DELIVERY)
PHONE: (919) 773-2800 FAX: (919) 771-2745

J. STEWART BOURNE, P.E. — STATE TRAFFIC MANAGEMENT ENGINEER
STEVE KITE, P.E. — TRAFFIC CONTROL PROJECT ENGINEER
DON PARKER — TRAFFIC CONTROL PROJECT DESIGN ENGINEER
SHEENA GREEN — TRAFFIC CONTROL DESIGN ENGINEER

DIVISION OF HIGHWAYS · STATE OF NORTH CAROLINA · DEPARTMENT OF TRANSPORTATION · WORK ZONE TRAFFIC CONTROL

JOSEPH LEWIS, PE
TRAFFIC CONTROL
PROJECT ENGINEER

A. MATTHEW THIGPEN, PE
TRAFFIC CONTROL
PROJECT DESIGN ENGINEER

APPROVED: A. Matthew Thigpen
Digitally signed by A. Matthew Thigpen
DN: c=US, ou=Raleigh, NC, email=mthigpen@vhb.com, o=Vanasse Hangen Brustlin Inc., cn=A. Matthew Thigpen
Date: 2015.03.03 14:56:19 -05'00'
DATE:

SEAL

NORTH CAROLINA PROFESSIONAL SEAL 034343 ENGINEER A. MATTHEW THIGPEN

3/3/2015
\\vhb\proj\Raleigh\38286.01NCDOT W-5206AA NC 59\cad\te\W-5206AA\Traffic\TrafficControl\TCP\W5206AA_TC_TCP_01.dgn
User:mthigpen

PROJ. REFERENCE NO.	SHEET NO.
W-5206AA	TMP-1A

ROADWAY STANDARD DRAWINGS

THE FOLLOWING ROADWAY STANDARDS AS SHOWN IN "ROADWAY STANDARD DRAWINGS" - PROJECT SERVICES UNIT - N.C. DEPARTMENT OF TRANSPORTATION - RALEIGH, N.C., DATED JANUARY 2012 ARE APPLICABLE TO THIS PROJECT AND BY REFERENCE HEREBY ARE CONSIDERED A PART OF THESE PLANS:

STD. NO.	TITLE
1101.01	WORK ZONE ADVANCE WARNING SIGNS
1101.02	TEMPORARY LANE CLOSURES
1101.04	TEMPORARY SHOULDER CLOSURES
1101.05	WORK ZONE VEHICLE ACCESSES
1101.11	TRAFFIC CONTROL DESIGN TABLES
1110.01	STATIONARY WORK ZONE SIGNS
1110.02	PORTABLE WORK ZONE SIGNS
1115.01	FLASHING ARROW BOARDS
1130.01	DRUM
1135.01	CONES
1145.01	BARRICADES
1150.01	FLAGGING DEVICES
1165.01	WORK VEHICLE LIGHTING SYSTEMS AND TMA DELINEATION
1180.01	SKINNY-DRUM
1205.01	PAVEMENT MARKINGS - LINE TYPES AND OFFSETS
1205.02	PAVEMENT MARKINGS - TWO-LANE AND MULTI-LANE ROADWAYS
1205.04	PAVEMENT MARKINGS - INTERSECTIONS
1205.05	PAVEMENT MARKINGS - TURN LANES
1205.06	PAVEMENT MARKINGS - LANE DROPS
1205.07	PAVEMENT MARKINGS - PEDESTRIAN CROSSWALKS
1205.08	PAVEMENT MARKINGS - SYMBOLS AND WORD MESSAGES
1205.09	PAVEMENT MARKINGS - PAINTED ISLANDS
1205.12	PAVEMENT MARKINGS - BRIDGES
1250.01	RAISED PAVEMENT MARKERS - INSTALLATION SPACING
1251.01	RAISED PAVEMENT MARKERS - PERMANENT AND TEMPORARY

LEGEND

GENERAL

- DIRECTION OF TRAFFIC FLOW
- DIRECTION OF PEDESTRIAN TRAFFIC FLOW
- EXIST. PVMT.
- NORTH ARROW
- PROPOSED PVMT.
- TEMP. SHORING (LOCATION PURPOSES ONLY)
- WORK AREA
- REMOVAL

SIGNALS

EXISTING PROPOSED TEMPORARY

PAVEMENT MARKINGS

EXISTING LINES
TEMPORARY LINES

TRAFFIC CONTROL DEVICES

- BARRICADE (TYPE III)
- CONE
- DRUM SKINNY DRUM TUBULAR MARKER
- TEMPORARY CRASH CUSHION
- FLASHING ARROW BOARD
- FLAGGER
- LAW ENFORCEMENT
- TRUCK MOUNTED ATTENUATOR (TMA)
- CHANGEABLE MESSAGE SIGN

TEMPORARY SIGNING

- PORTABLE SIGN
- STATIONARY SIGN
- STATIONARY OR PORTABLE SIGN

PAVEMENT MARKERS

- CRYSTAL/CRYSTAL
- CRYSTAL/RED
- YELLOW/YELLOW

PAVEMENT MARKING SYMBOLS

PAVEMENT MARKING SYMBOLS

TEMPORARY PAVEMENT MARKING

P2	WHITE STOPBAR	PAINT (24")
P13	3FT.-9FT./SP WHITE MINISKIP	PAINT (8")
PA	WHITE EDGELINE	PAINT (4")
PB	YELLOW EDGELINE	PAINT (4")
PC	10 FT. WHITE SKIP	PAINT (4")
PD	3FT.-9FT./SP WHITE MINISKIP	PAINT (4")
PE	WHITE SOLID LANE LINE	PAINT (4")
PI	YELLOW DOUBLE CENTER LINE	PAINT (4")
PN	WHITE GORELINE	PAINT (8")
PO	WHITE DIAGONAL	PAINT (8")
PP	YELLOW DIAGONAL	PAINT (8")
PQ	WHITE CROSSWALK LINE	PAINT (8")
PR	WHITE SOLID LANE LINE	PAINT (8")
PU	WHITE DIAGONAL	PAINT (12")
QA	LEFT TURN ARROW	PAINT
QB	RIGHT TURN ARROW	PAINT
QC	STRAIGHT ARROW	PAINT
QE	COMBO. RIGHT/STRAIGHT ARROW	PAINT
QI	ALPHANUMERIC CHARACTER	PAINT

APPROVED: A. Matthew Thigpen DATE: Digitally signed by A. Matthew Thigpen DN: cn=A. Matthew Thigpen, c=US, o=NCDOT, ou=Transportation Mobility and Safety Division, ou=Traffic Engineering Branch, ou=Work Zone Traffic Control, ou=A. Matthew Thigpen, email=mthigpen@ncdot.gov Date: 2015.03.03 14:57:26 -05'00'

SEAL — NORTH CAROLINA PROFESSIONAL SEAL 034343 ENGINEER A. MATTHEW THIGPEN

DIVISION OF HIGHWAYS · STATE OF NORTH CAROLINA · DEPARTMENT OF TRANSPORTATION · WORK ZONE TRAFFIC CONTROL

ROADWAY STANDARD DRAWINGS & LEGEND

3/3/2015
\\vhb\proj\Raleigh\38286.01NCDOT W-5206AA NC 59\cad\te\W-5206AA\Traffic\TrafficControl\TCP\W5206AA_TC_TCP_01.dgn
User:mthigpen

PROJ. REFERENCE NO.	SHEET NO.
W-5206AA	TMP-2A

GENERAL NOTES

CHANGES MAY BE REQUIRED WHEN PHYSICAL DIMENSIONS IN THE DETAIL DRAWINGS, STANDARD DETAILS, AND ROADWAY DETAILS ARE NOT ATTAINABLE TO MEET FIELD CONDITIONS OR RESULT IN DUPLICATE OR UNDESIRED OVERLAPPING OF DEVICES. MODIFICATION MAY INCLUDE: MOVING, SUPPLEMENTING, COVERING, OR REMOVAL OF DEVICES AS DIRECTED BY THE ENGINEER.

THE FOLLOWING GENERAL NOTES APPLY AT ALL TIMES FOR THE DURATION OF THE CONSTRUCTION PROJECT EXCEPT WHEN OTHERWISE NOTED IN THE PLAN OR DIRECTED BY THE ENGINEER.

TIME RESTRICTIONS

A) DO NOT CLOSE OR NARROW TRAVEL LANES AS FOLLOWS:

NOTE: THESE TIME RESTRICTIONS DO NOT APPLY DURING PHASE II STEPS 1-3

ROAD NAME	DAY AND TIME RESTRICTIONS
ALL ROADS	MONDAY THRU THURSDAY 6:00 A.M. TO 8:30 A.M. AND 4:00 P.M. TO 7:00 P.M. AND FRIDAY 6:00 A.M. TO 8:30 A.M. AND FRIDAY 12:00 P.M. (NOON) TO SUNDAY 9:00 P.M.

B) DO NOT CLOSE OR NARROW TRAVEL LANES DURING HOLIDAYS AND SPECIAL EVENTS AS FOLLOWS:

ROAD NAME

ALL ROADS

HOLIDAY

1. FOR ANY UNEXPECTED OCCURRENCE THAT CREATES UNUSUALLY HIGH TRAFFIC VOLUMES, AS DIRECTED BY THE ENGINEER.

2. FOR NEW YEAR'S, BETWEEN THE HOURS OF 6:00 A.M. DECEMBER 31st TO 7:00 P.M. JANUARY 2ND. IF NEW YEAR'S DAY IS ON A FRIDAY,SATURDAY, SUNDAY, OR MONDAY THEN UNTIL 7:00 P.M. THE FOLLOWING TUESDAY.

3. FOR EASTER, BETWEEN THE HOURS OF 6:00 A.M. THURSDAY AND 7:00 P.M. MONDAY.

4. FOR MEMORIAL DAY, BETWEEN THE HOURS OF 6:00 A.M. FRIDAY TO 7:00 P.M. TUESDAY.

5. FOR INDEPENDENCE DAY, BETWEEN THE HOURS OF 6:00 A.M. THE DAY BEFORE INDEPENDENCE DAY AND 7:00 P.M. THE DAY AFTER INDEPENDENCE DAY.

   IF INDEPENDENCE DAY IS ON A FRIDAY, SATURDAY, SUNDAY OR MONDAY THEN BETWEEN THE HOURS OF 6:00 A.M. THE THURSDAY BEFORE INDEPENDENCE DAY AND 7:00 P.M. THE TUESDAY AFTER INDEPENDENCE DAY.

6. FOR LABOR DAY, BETWEEN THE HOURS OF 6:00 A.M. FRIDAY TO 7:00 P.M. TUESDAY.

7. FOR THANKSGIVING DAY, BETWEEN THE HOURS OF 6:00 A.M. TUESDAY AND 7:00 P.M. MONDAY.

8. FOR CHRISTMAS, BETWEEN THE HOURS OF 6:00 A.M. THE FRIDAY BEFORE THE WEEK OF CHRISTMAS DAY AND 7:00 P.M. THE FOLLOWING TUESDAY AFTER THE WEEK OF CHRISTMAS.

LANE AND SHOULDER CLOSURE REQUIREMENTS

C) REMOVE LANE CLOSURE DEVICES FROM THE LANE WHEN WORK IS NOT BEING PERFORMED BEHIND THE LANE CLOSURE OR WHEN A LANE CLOSURE IS NO LONGER NEEDED OR AS DIRECTED BY THE ENGINEER.

D) WHEN PERSONNEL AND/OR EQUIPMENT ARE WORKING WITHIN 15 FT OF AN OPEN TRAVEL LANE, CLOSE THE NEAREST OPEN SHOULDER USING ROADWAY STANDARD DRAWING NO. 1101.04 UNLESS THE WORK AREA IS PROTECTED BY BARRIER OR GUARDRAIL OR A LANE CLOSURE IS INSTALLED.

E) WHEN PERSONNEL AND/OR EQUIPMENT ARE WORKING ON THE SHOULDER ADJACENT TO AN UNDIVIDED FACILITY AND WITHIN 5 FT OF AN OPEN TRAVEL LANE, CLOSE THE NEAREST OPEN TRAVEL LANE USING ROADWAY STANDARD DRAWING NO. 1101.02 UNLESS THE WORK AREA IS PROTECTED BY BARRIER OR GUARDRAIL.

   WHEN PERSONNEL AND/OR EQUIPMENT ARE WORKING ON THE SHOULDER ADJACENT TO A DIVIDED FACILITY AND WITHIN 10 FT OF AN OPEN TRAVEL LANE, CLOSE THE NEAREST OPEN TRAVEL LANE USING ROADWAY STANDARD DRAWING NO. 1101.02 UNLESS THE WORK AREA IS PROTECTED BY BARRIER OR GUARDRAIL.

F) WHEN PERSONNEL AND/OR EQUIPMENT ARE WORKING WITHIN A LANE OF TRAVEL OF AN UNDIVIDED OR DIVIDED FACILITY, CLOSE THE LANE ACCORDING TO THE TRANSPORTATION MANAGEMENT PLANS, ROADWAY STANDARD DRAWINGS, OR AS DIRECTED BY THE ENGINEER. CONDUCT THE WORK SO THAT ALL PERSONNEL AND/OR EQUIPMENT REMAIN WITHIN THE CLOSED TRAVEL LANE.

G) DO NOT WORK SIMULTANEOUSLY WITHIN 15 FT ON BOTH SIDES OF AN OPEN TRAVELWAY, RAMP, OR LOOP WITHIN THE SAME LOCATION UNLESS PROTECTED WITH GUARDRAIL OR BARRIER.

H) DO NOT INSTALL MORE THAN 1/2 MILE OF LANE CLOSURE ON HOPE MILLS RD. MEASURED FROM THE BEGINNING OF THE MERGE TAPER TO THE END OF THE LANE CLOSURE.

I) DO NOT INSTALL MORE THAN ONE LANE CLOSURE IN ANY ONE DIRECTION ON HOPE MILLS RD.

J) PROVIDE TRAFFIC CONTROL FOR APPROPRIATE LANE CLOSURES FOR SURVEYING DONE BY THE DEPARTMENT.

APPROVED: A. Matthew Thigpen DATE

Digitally signed by A. Matthew Thigpen
DN: cn=A. Matthew Thigpen, o=Kimley-Horn and Associates, Inc., ou=Kimley-Horn and Associates Hangar Boulevin Inc., c=US, e=A. Matthew Thigpen
Date: 2015.03.03 14:58:19 -05'00'

SEAL

NORTH CAROLINA PROFESSIONAL SEAL 034343 ENGINEER MATTHEW THIGPEN

DIVISION OF HIGHWAYS · STATE OF NORTH CAROLINA · DEPARTMENT OF TRANSPORTATION · WORK ZONE TRAFFIC CONTROL

TRANSPORTATION OPERATIONS PLAN: (MANAGEMENT STRATEGIES, GENERAL NOTES AND LOCAL NOTES)

3/3/2015
\\vhb\proj\Raleigh\38286.01NCDOT W-5206AA NC 59\cad\te\W-5206AA\Traffic\TrafficControl\TCP\W5206AA_TC_TCP_02.dgn
User:mthigpen

GENERAL NOTES CONTINUED

PAVEMENT EDGE DROP OFF REQUIREMENTS

K) BACKFILL AT A 6:1 SLOPE UP TO THE EDGE AND ELEVATION OF EXISTING PAVEMENT IN AREAS ADJACENT TO AN OPENED TRAVEL LANE THAT HAS AN EDGE OF PAVEMENT DROP-OFF AS FOLLOWS:
BACKFILL DROP-OFFS THAT EXCEED 2 INCHES ON ROADWAYS WITH POSTED SPEED LIMITS OF 45 MPH OR GREATER.

BACKFILL DROP-OFFS THAT EXCEED 3 INCHES ON ROADWAYS WITH POSTED SPEED LIMITS LESS THAN 45 MPH.

BACKFILL WITH SUITABLE COMPACTED MATERIAL, AS APPROVED BY THE ENGINEER, AT NO EXPENSE TO THE DEPARTMENT.

L) DO NOT EXCEED A DIFFERENCE OF 2 INCHES IN ELEVATION BETWEEN OPEN LANES OF TRAFFIC FOR NOMINAL LIFTS OF 1.5 INCHES. INSTALL ADVANCE WARNING "UNEVEN LANES" SIGNS (W8-11) 350 FT IN ADVANCE AND A MINIMUM OF EVERY HALF MILE THROUGHOUT THE UNEVEN AREA.

TRAFFIC PATTERN ALTERATIONS

M) NOTIFY THE ENGINEER TWENTY ONE (21) CALENDAR DAYS PRIOR TO ANY TRAFFIC PATTERN ALTERATION.

SIGNING

N) INSTALL ADVANCE WORK ZONE WARNING SIGNS WHEN WORK IS WITHIN 40 FT FROM THE EDGE OF TRAVEL LANE AND NO MORE THAN THREE (3) DAYS PRIOR TO THE BEGINNING OF CONSTRUCTION.

O) ENSURE ALL NECESSARY SIGNING IS IN PLACE PRIOR TO ALTERING ANY TRAFFIC PATTERN.

P) INSTALL BLACK ON ORANGE "DIP" SIGNS (W8-2) AND/OR "BUMP" SIGNS (W8-1) 350 FT IN ADVANCE OF THE UNEVEN AREA, OR AS DIRECTED BY THE ENGINEER.

TRAFFIC CONTROL DEVICES

Q) WHEN LANE CLOSURES ARE NOT IN EFFECT SPACE CHANNELIZING DEVICES IN WORK AREAS NO GREATER IN FEET THAN TWICE THE POSTED SPEED LIMIT (MPH) EXCEPT, 10 FT ON-CENTER IN RADII, AND 3 FT OFF THE EDGE OF AN OPEN TRAVELWAY. REFER TO STANDARD SPECIFICATIONS FOR ROADS AND STRUCTURES SECTIONS 1130 (DRUMS), 1135 (CONES) AND 1180 (SKINNY DRUMS) FOR ADDITIONAL REQUIREMENTS.

R) PLACE TYPE III BARRICADES, WITH "ROAD CLOSED" SIGN R11-2 ATTACHED, OF SUFFICIENT LENGTH TO CLOSE ENTIRE ROADWAY.

S) PLACE ADDITIONAL SETS OF THREE CHANNELIZING DEVICES PERPENDICULAR TO THE EDGE OF TRAVELWAY ON 500 FT CENTERS WHEN UNOPENED LANES ARE CLOSED TO TRAFFIC.

PAVEMENT MARKINGS AND MARKERS

T) INSTALL TEMPORARY PAVEMENT MARKINGS AND TEMPORARY PAVEMENT MARKERS ON INTERIM LAYERS OF PAVEMENT AS FOLLOWS:

ROAD NAME	MARKING	MARKER
ALL ROADS	PAINT	TEMPORARY RAISED

U) PLACE ONE APPLICATION OF PAINT FOR TEMPORARY TRAFFIC PATTERNS. PLACE A SECOND APPLICATION OF PAINT SIX (6) MONTHS AFTER THE INITIAL APPLICATION AND EVERY SIX MONTHS OR AS DIRECTED BY THE ENGINEER.

V) TIE PROPOSED PAVEMENT MARKING LINES TO EXISTING PAVEMENT MARKING LINES.

W) REMOVE/REPLACE ANY CONFLICTING/DAMAGED PAVEMENT MARKINGS AND MARKERS BY THE END OF EACH DAY'S OPERATION.

X) TRACE THE PROPOSED MONOLITHIC ISLAND LOCATIONS WITH PROPER COLOR PAVEMENT MARKINGS PRIOR TO INSTALLATION. PLACE DRUMS TO DELINEATE ANY PROPOSED MONOLITHIC ISLANDS BEFORE INSTALLATION.

MISCELLANEOUS

Y) LAW ENFORCEMENT MAY BE USED TO MAINTAIN TRAFFIC THROUGH THE WORK AREA AND/OR INTERSECTIONS, AS DIRECTED BY THE ENGINEER.

Z) ALL CURB RAMP LOCATIONS SHALL BE DERIVED FROM STATIONING SHOWN ON PAVEMENT MARKING PLANS OR AS DIRECTED BY THE ENGINEER IN COORDINATION WITH THE SIGNING AND DELINEATION UNIT.

AA) CONTRACTOR SHALL MAINTAIN SIDEWALK ACCESS AT ALL TIMES AS STATED IN THE PHASING. CONTRACTOR SHALL BE RESPONSIBLE TO PROVIDE TEMPORARY SIDEWALKS (CONCRETE, ASPHALT, OR OTHER SUITABLE MATERIAL AS APPROVED BY THE ENGINEER) AT ALL LOCATIONS WHERE THE OPEN PEDESTRIAN TRAVELWAY HAS BEEN REMOVED FOR CONSTRUCTION OPERATIONS (UTILITIES, DRAINAGE, ETC.).

APPROVED: A. Matthew Thigpen DATE: Digitally signed by A. Matthew Thigpen DN: cn=A. Matthew Thigpen, o=NCDOT, ou=Engineer, email=mthigpen@ncdot.gov, c=US Date: 2015.03.03 14:59:15 -05'00'

SEAL

NORTH CAROLINA PROFESSIONAL SEAL 034343 ENGINEER A. MATTHEW THIGPEN

DIVISION OF HIGHWAYS STATE OF NORTH CAROLINA DEPARTMENT OF TRANSPORTATION WORK ZONE TRAFFIC CONTROL

TRANSPORTATION OPERATIONS PLAN: (MANAGEMENT STRATEGIES, GENERAL NOTES AND LOCAL NOTES)

3/3/2015
\\vhb\proj\Raleigh\38286.01NCDOT W-5206AA NC 59\cad\tex\W-5206AA\Traffic\TrafficControl\TCP\W5206AA_TC_TCP_02.dgn
User:mthigpen

PROJ. REFERENCE NO.	SHEET NO.
W-5206AA	TMP-3

PHASING

THE CONTRACTOR SHALL MAINTAIN ACCESS TO ALL EXISTING DRIVEWAYS AS DIRECTED BY THE ENGINEER.

PHASE I

STEP 1
INSTALL WORK ZONE ADVANCE WARNING SIGNS. SEE RSD 1101.01.

STEP 2
AWAY FROM TRAFFIC, AS MUCH AS POSSIBLE, AND USING LANE CLOSURES (RSD NO. 1101.02, SHEETS 1, 2 AND 3 OF 15), WHEN NECESSARY, BEGIN CONSTRUCTION OF THE FOLLOWING UP TO THE EDGE AND ELEVATION OF EXISTING PAVEMENT INCLUDING DRAINAGE (SEE SHEETS TMP-4 AND TMP-5).

* -L- FROM STA 10+52 +/- TO STA 11+21 +/-
* -L- FROM STA 21+86 +/- TO STA 22+85 +/-
* -L- FROM STA 29+10 +/- TO STA 29+50 +/-
* -L- FROM STA 43+35 +/- TO STA 46+43 +/-
* -L- FROM STA 46+66 +/- TO STA 47+64 +/-
* -L- FROM STA 48+15 +/- TO STA 53+91 +/-
* -L- FROM STA 67+74 +/- TO STA 69+07 +/-
* -L- FROM STA 68+85 +/- TO STA 69+81 +/-
* -Y- FROM STA 10+40 +/- TO STA 17+43 +/-

CONSTRUCT PROPOSED DRAINAGE CROSS PIPES ACROSS -L- AND -Y- AS FOLLOWS:

USE LANE CLOSURES (RSD NO. 1101.02, SHEETS 1, 2, 3 AND 7 OF 15) AND LAW ENFORCEMENT AS NECESSARY DURING OVERNIGHT PERIODS.

PATCH PAVEMENT AND RESTORE TRAFFIC TO ITS PRIOR PATTERN BY THE END OF THE WORK PERIOD.

AWAY FROM TRAFFIC AND USING LANE CLOSURES (RSD 1101.02, SHEETS 1, 2, 3 AND 7 OF 15), WHEN NECESSARY, INSTALL AND COVER FINAL SIGNALS AT THE FOLLOWING LOCATIONS:

#06-0357 (CAMDEN ROAD)
#06-1226 (WALMART)
#06-0357 (GOLFVIEW ROAD)
#06-0363 (ROCKFISH ROAD)

STEP 3
AWAY FROM TRAFFIC AS MUCH AS POSSIBLE, AND USING LANE CLOSURES (RSD 1101.02, SHEETS 1, 2, 3 AND 7 OF 15), AND LAW ENFORCEMENT WHEN NECESSARY, REVISE THE PAVEMENT MARKIKNGS AND INSTALL DEVICES ON -L- AND INTERSECTING ROADS TO SHIFT TRAFFIC INTO PHASE II TEMPORARY FOUR-LANE MEDIAN DIVIDED TRAFFIC PATTERN SHOWN ON TMP-6 THRU TMP-13 AS FOLLOWS:

PLACE TEMPORARY PAVEMENT MARKINGS & MARKERS IN THE FINAL PATTERN (INCLUDING SOLID YELLOW EDGE LINE MARKINGS OUTLINING SHAPE OF PROPOSED MEDIANS), SHIFT TRAFFIC TO THE FINAL PATTERN, PLACE SKINNY DRUMS WITHIN OUTLINES OF PROPOSED RAISED MEDIANS AND INSTALL REMAINING TRAFFIC CONTROL DEVICES. ACTIVATE ALL FINAL SIGNALS AND OPEN TO PHASE II TRAFFIC PATTERN.

PHASE II

CONTRACTOR SHALL COMPLETE THE WORK OF PHASE II STEPS 1 THRU 3 IN 21 CONSECUTIVE CALENDAR DAYS. SEE INTERMEDIATE CONTRACT TIME AND LIQUIDATED DAMAGES.

STEP 1
USING RSD 1101.02, SHEET 7 OF 15, TEMPORARILY CLOSE THE LEFT LANE OF HOPE MILLS ROAD FROM THE SIGNALIZED INTERSECTION OF CAMDEN ROAD TO THE SIGNALIZED INTERSECTION OF WALMART. WORKING IN A CONTINUOUS MANNER, CONTRACTOR SHALL PERFORM THE FOLLOWING (SEE SHEETS TMP-6 THRU TMP-7):

A. REMOVE EXISTING CONCRETE MEDIAN ISLAND.

B. COMPLETE DRAINAGE CONSTRUCTION IN MEDIANS USING PRECAST CONCRETE BOXES.

C. CONSTRUCT PROPOSED RAISED MONOLITHIC MEDIANS.

D. REPLACE ANY PAVEMENT MARKINGS CONCEALED DURING CONSTRUCTION AND INSTALL REMAINING PAVEMENT MARKINGS IN AREAS OF EXISTING CONCRETE ISLAND REMOVAL.

E. REOPEN LEFT LANE TO TRAFFIC IN ORIGINAL PHASE II PATTERN.

STEP 2
USING RSD 1101.02, SHEET 7 OF 15, TEMPORARILY CLOSE THE LEFT LANE OF HOPE MILLS ROAD FROM THE SIGNALIZED INTERSECTION OF WALMART TO THE SIGNALIZED INTERSECTION OF GOLFVIEW ROAD AND CONSTRUCT THE PROPOSED RAISED MONOLITHIC MEDIANS AND ASSOCIATED DRAINAGE IN THE SAME MANNER AS STEP 1 (SEE SHEETS TMP-8 THRU TMP-11).

STEP 3
USING RSD 1101.02, SHEET 7 OF 15, TEMPORARILY CLOSE THE LEFT LANE OF HOPE MILLS ROAD FROM THE SIGNALIZED INTERSECTION OF GOLFVIEW ROAD TO THE SIGNALIZED INTERSECTION OF ROCKFISH ROAD AND CONSTRUCT THE PROPOSED RAISED MONOLITHIC MEDIANS AND ASSOCIATED DRAINAGE IN THE SAME MANNER AS STEP 1 (SEE SHEETS TMP-12 THRU TMP-13).

STEP 4
USING RSD 1101.02, SHEETS 1, 2, 3 AND 7 OF 15 AND LAW ENFORCEMENT WHEN NECESSARY MILL OUTSIDE LANE OF -L-, MILL HOPE MILLS ROAD FROM ROCKFISH ROAD TO PARKTON ROAD (NOT SHOWN IN PLANS), PLACE FINAL LAYER OF SURFACE COURSE AND INSTALL TEMPORARY PAVEMENT MARKINGS (PAINT) AND TEMPORARY MARKERS IN THE FINAL PATTERN (SEE PAVEMENT MARKING PLANS) INCLUDING HOPE MILLS ROAD FROM ROCKFISH ROAD TO PARKTON ROAD (NOT SHOWN IN PLANS) AND OPEN ALL LANES TO TRAFFIC.

STEP 5
USING RSD 1101.02, PLACE FINAL PAVEMENT MARKINGS AND MARKERS (SEE PAVEMENT MARKING PLANS).

STEP 6
REMOVE ALL REMAINING TRAFFIC CONTROL DEVICES.

APPROVED: A. Matthew Thigpen DATE: Digitally signed by A. Matthew Thigpen DN: c=US, o=Vanasse Hangen Brustlin, Inc., cn=A. Matthew Thigpen 2015.03.03 15:00:11 -05'00'

SEAL

NORTH CAROLINA PROFESSIONAL SEAL 034343 ENGINEER A. MATTHEW THIGPEN

DIVISION OF HIGHWAYS · STATE OF NORTH CAROLINA · DEPARTMENT OF TRANSPORTATION · WORK ZONE TRAFFIC CONTROL

PHASING

3/3/2015
\\rvhb\proj\Raleigh\38286.01NCDOT W-5206AA NC 59\cad\te\W-5206AA\Traffic\TrafficControl\TCP\W5206AA_TC_TCP_03.dgn
User:mthigpen

PROJ. REFERENCE NO.	SHEET NO.
W-5206AA	TMP-4

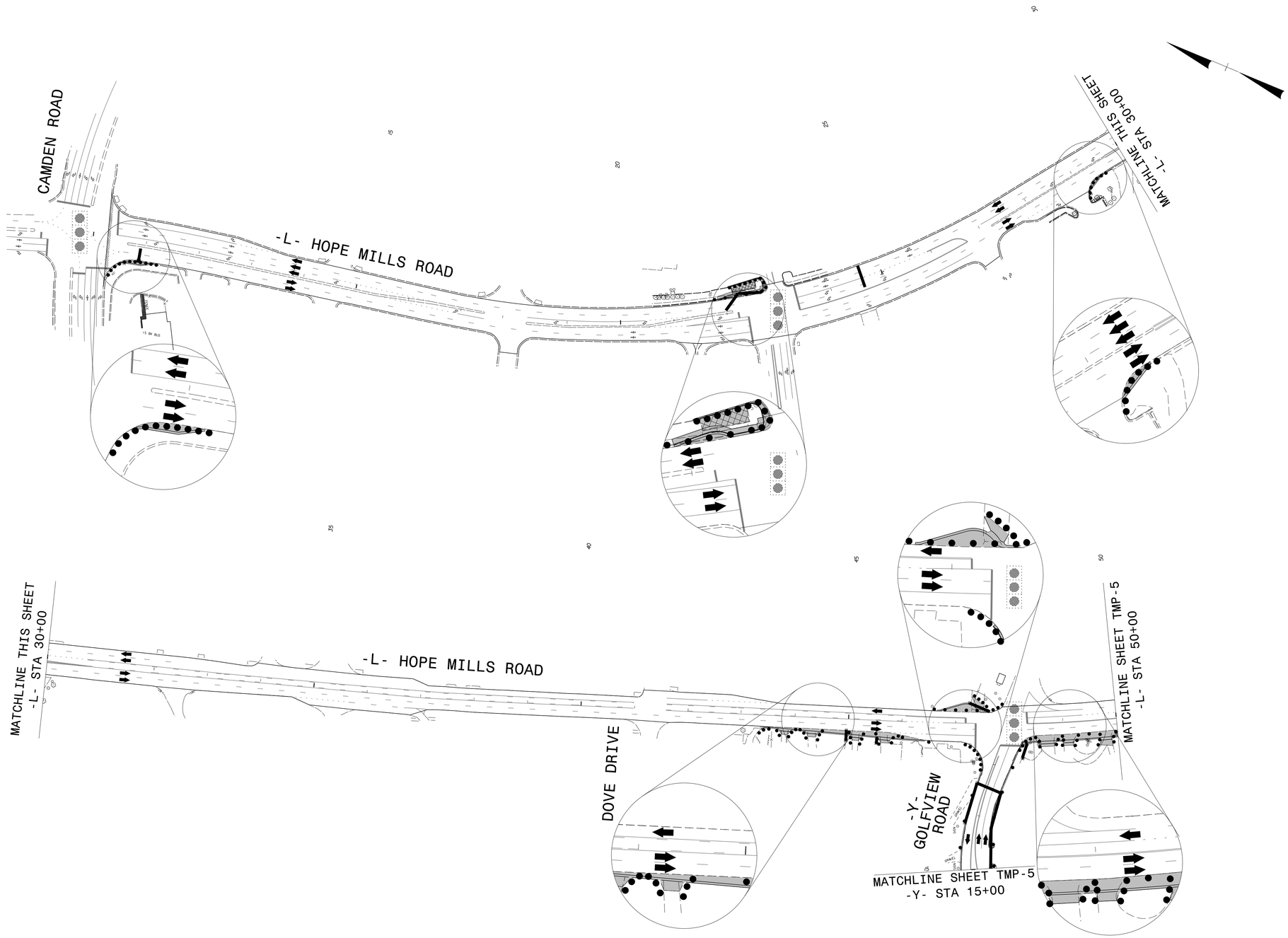

APPROVED: A. Matthew Thigpen DATE:

Digitally signed by A. Matthew Thigpen
DN: c=US, o=Raleigh, NC, ou=Vanasse Hangen Brustlin Inc., cn=A. Matthew Thigpen
2015.03.03 15:01:13 -05'00'

SEAL

NORTH CAROLINA PROFESSIONAL SEAL 034343 A. ENGINEER MATTHEW THIGPEN

DIVISION OF HIGHWAYS
STATE OF NORTH CAROLINA
DEPARTMENT OF TRANSPORTATION
WORK ZONE TRAFFIC CONTROL

PHASE I DETAIL
-L- AND -Y-

3/3/2015
\\vhb\proj\Raleigh\38286.01NCDOT W-5206AA NC 59\cad\tex\W-5206AA\Traffic\TrafficControl\TCP\W5206AA_TC_TCP_04.dgn
User:mthigpen

PROJ. REFERENCE NO.	SHEET NO.
W-5206AA	TMP-5

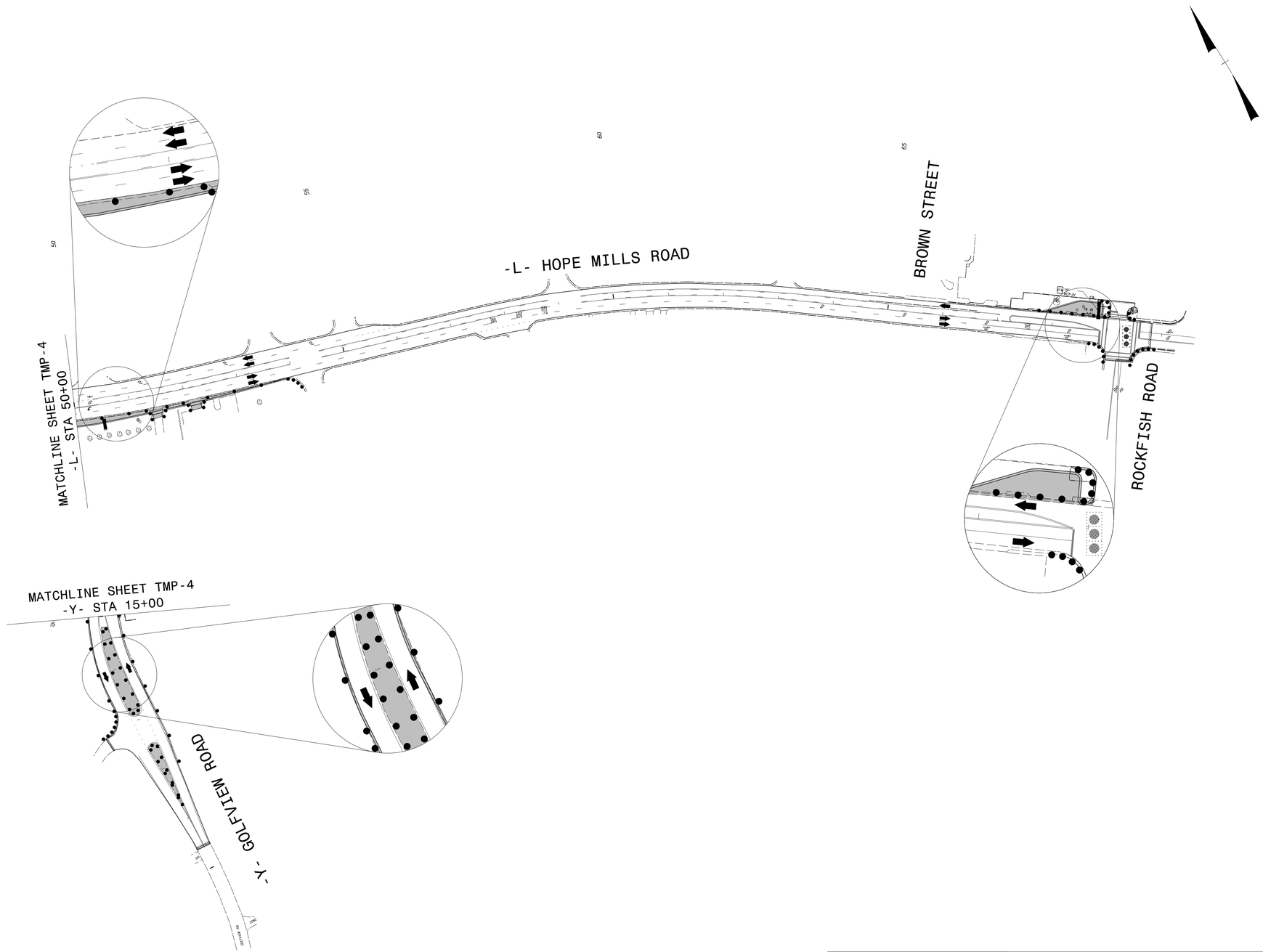

APPROVED: A. Matthew Thigpen DATE

Digitally signed by A. Matthew Thigpen
DN: c=US, o=Hanson Bridgestone, ou=Hanson Hangen Brustlin Inc., cn=A. Matthew Thigpen
Date: 2015.03.03 15:03:24 -05'00'

SEAL

NORTH CAROLINA PROFESSIONAL SEAL 034343 ENGINEER A. MATTHEW THIGPEN

DIVISION OF HIGHWAYS
STATE OF NORTH CAROLINA
DEPARTMENT OF TRANSPORTATION
WORK ZONE TRAFFIC CONTROL

PHASE I DETAIL
-L- AND -Y-

3/3/2015
\\vhb\proj\Raleigh\38286.01NCDOT W-5206AA NC 59\cad\tte\W-5206AA\Traffic\TrafficControl\TCP\W5206AA_TC_TCP_05.dgn
User:mthigpen

PROJ. REFERENCE NO.	SHEET NO.
W-5206AA	TMP-6

DETAIL A

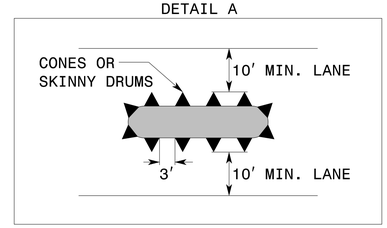

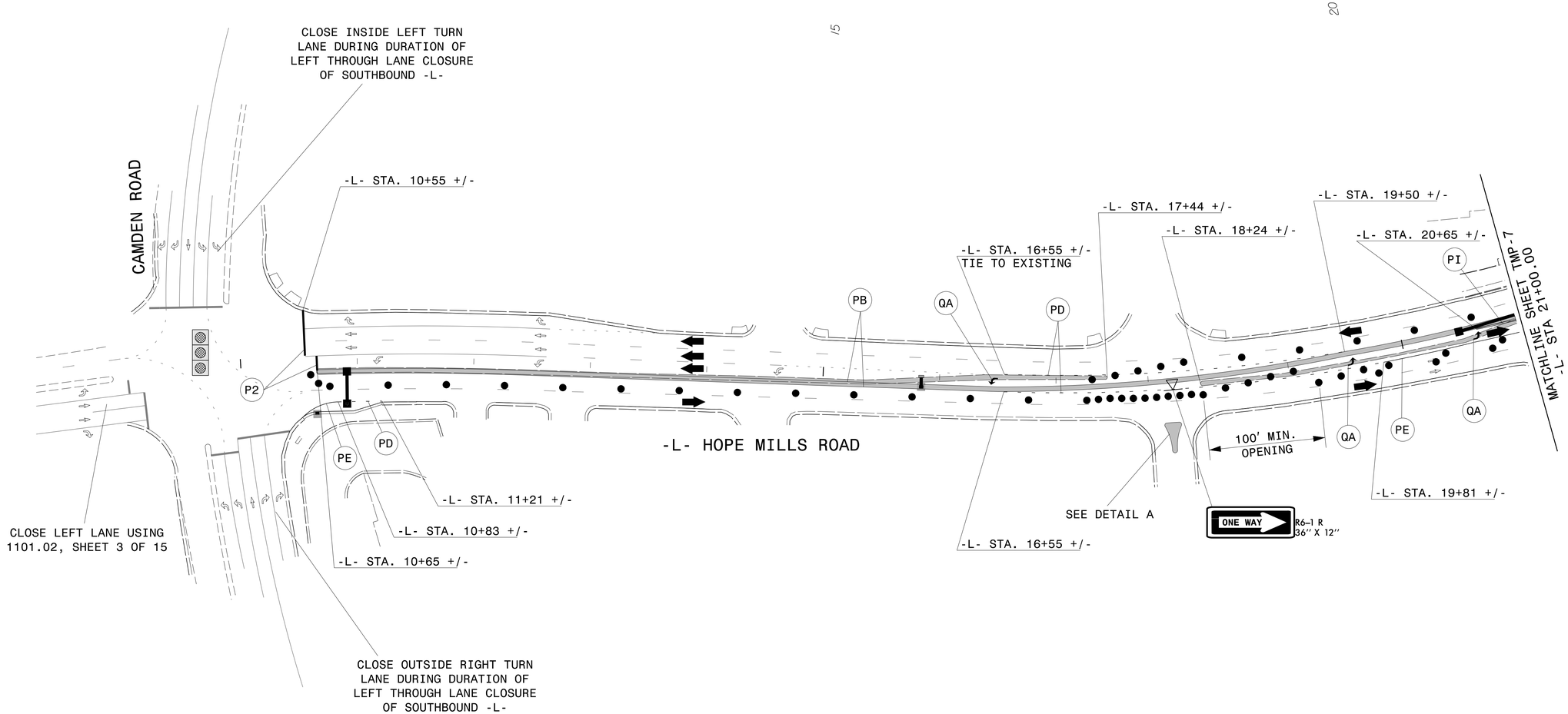

APPROVED: A. Matthew Thigpen DATE:

Digitally signed by A. Matthew Thigpen
DN: c=US, o=Raleigh, NC, ou=A.Matthew.Thigpen@ncdot.gov, o=Kimley-Horn Brustlin Inc., cn=A. Matthew Thigpen
2015.03.03 15:03:28 -05'00'

SEAL

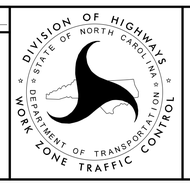

PHASE II STEP 1
DETAIL

3/3/2015
\\vhb\proj\Raleigh\38286.01NCDOT W-5206AA NC 59\cad\te\W-5206AA\Traffic\TrafficControl\TCP\W5206AA_TC_TCP_06.dgn
User:mthigpen

PROJ. REFERENCE NO.	SHEET NO.
W-5206AA	TMP-7

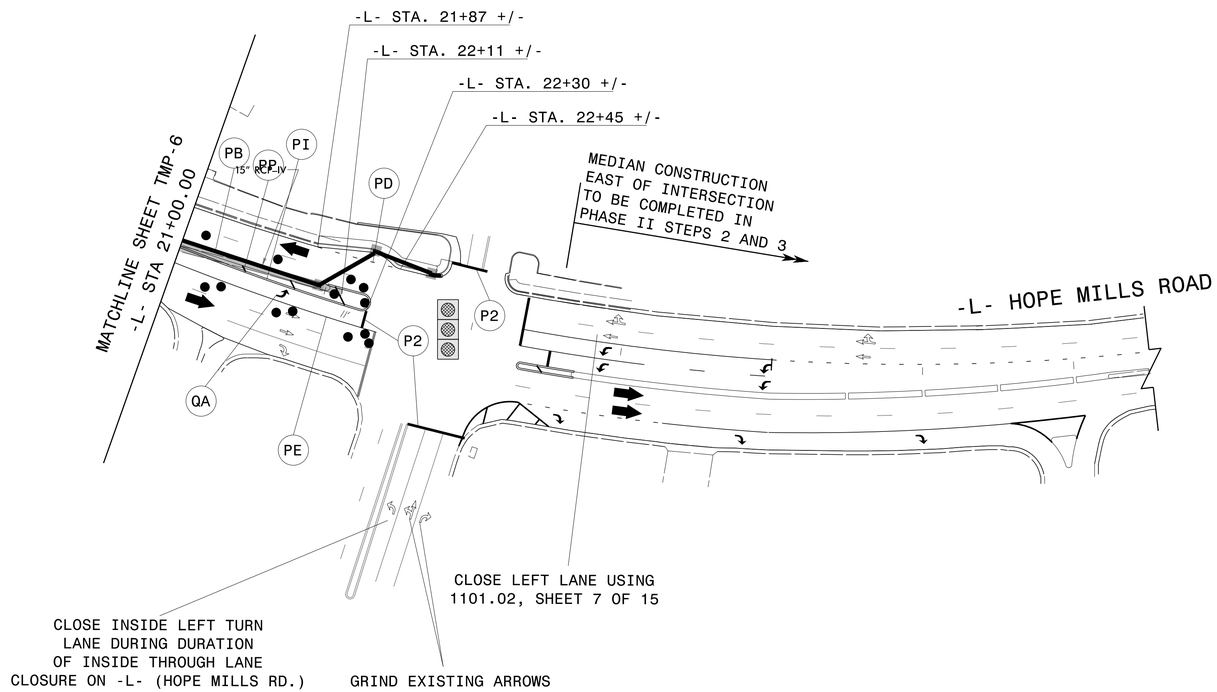

APPROVED: A. Matthew Thigpen DATE:

Digitally signed by A. Matthew Thigpen
DN: c=US, o=Raleigh, NC, ou=Vanasse Hangen Brustlin Inc., cn=A. Matthew Thigpen
Date: 2015.03.03 15:04:34 -05'00'

SEAL

NORTH CAROLINA PROFESSIONAL SEAL 034343 ENGINEER A. MATTHEW THIGPEN

DIVISION OF HIGHWAYS
STATE OF NORTH CAROLINA
DEPARTMENT OF TRANSPORTATION
WORK ZONE TRAFFIC CONTROL

PHASE II STEP 1
DETAIL

3/3/2015
\\vhb\proj\Raleigh\38286.01NCDOT W-5206AA NC 59\cad\te\W-5206AA\Traffic\TrafficControl\TCP\W5206AA_TC_TCP_07.dgn
User:mthigpen

PROJ. REFERENCE NO.	SHEET NO.
W-5206AA	TMP-8

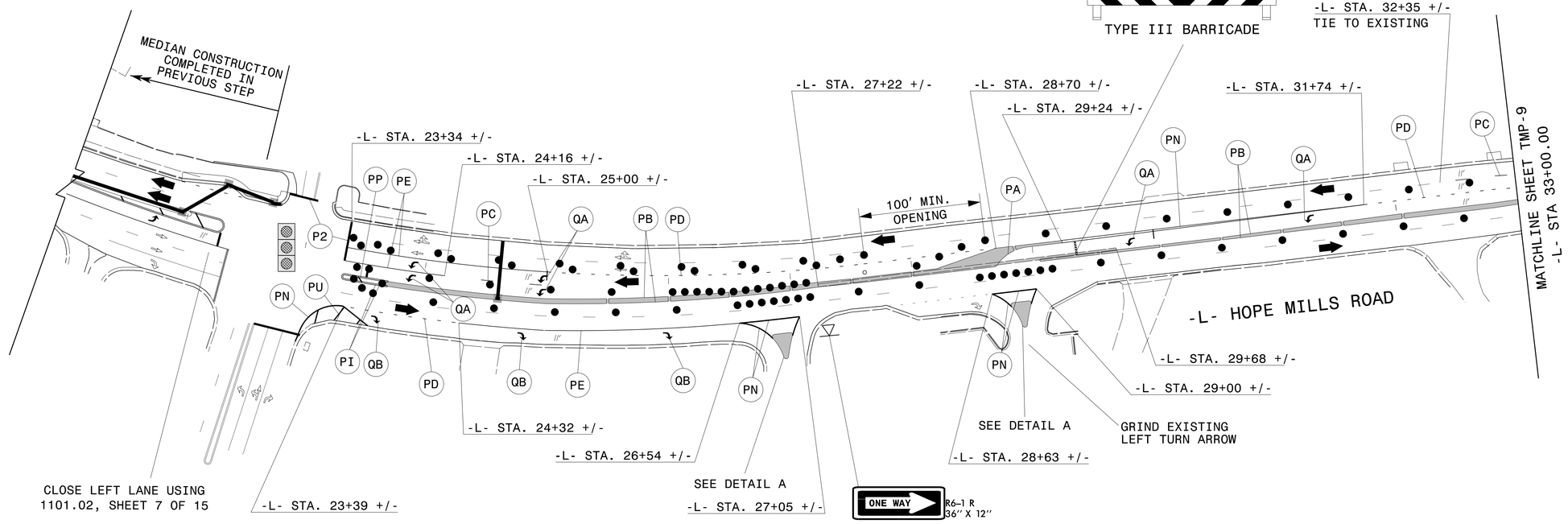

DETAIL A

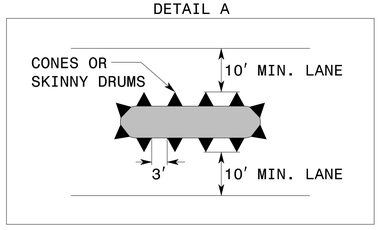

APPROVED: A. Matthew Thigpen DATE:

Digitally signed by A. Matthew Thigpen
DN: cn=A. Matthew Thigpen, o=Vanasse Hangen Brustlin Inc., c=US
2015.03.03 15:05:43 -05'00'

SEAL

NORTH CAROLINA PROFESSIONAL SEAL 034343 ENGINEER A. MATTHEW THIGPEN

DIVISION OF HIGHWAYS STATE OF NORTH CAROLINA DEPARTMENT OF TRANSPORTATION WORK ZONE TRAFFIC CONTROL

PHASE II STEP 2
DETAIL

3/3/2015
\\vhb\proj\Raleigh\38286.01NCDOT W-5206AA NC 59\cad\tex\W-5206AA\Traffic\TrafficControl\TCP\W5206AA_TC_TCP_08.dgn
User:mthigpen

PROJ. REFERENCE NO.	SHEET NO.
W-5206AA	TMP-9

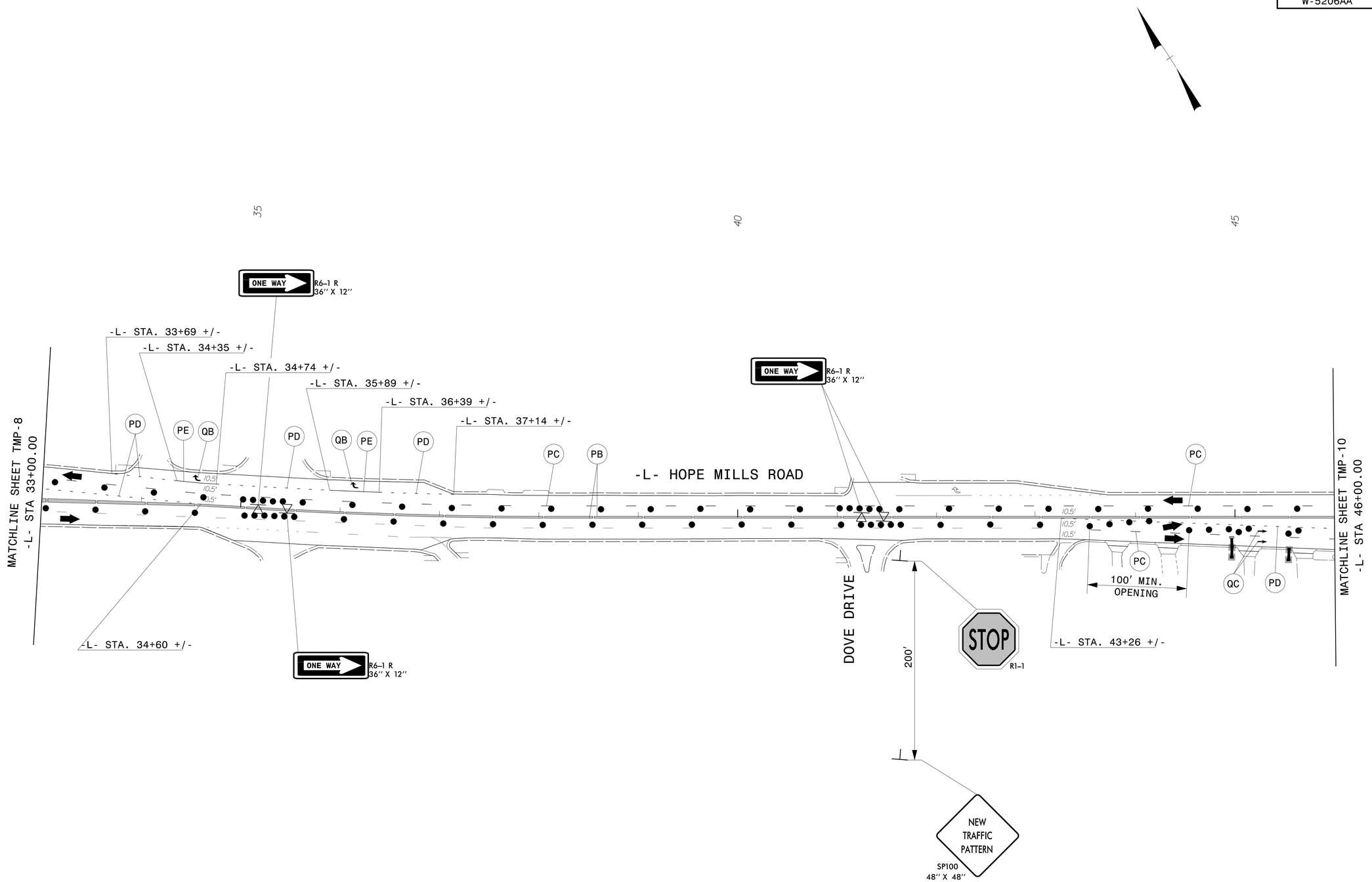

APPROVED: A. Matthew Thigpen DATE:

Digitally signed by A. Matthew Thigpen DN: C=US, o=Raleigh, NC, ou=Kimley-Horn and Associates Hangen Brustlin Inc., cn=A. Matthew Thigpen 2015.03.03 15:07:06 -05'00'

SEAL

NORTH CAROLINA PROFESSIONAL SEAL 034343 ENGINEER A. MATTHEW THIGPEN

DIVISION OF HIGHWAYS STATE OF NORTH CAROLINA DEPARTMENT OF TRANSPORTATION WORK ZONE TRAFFIC CONTROL

PHASE II STEP 2
DETAIL

3/3/2015
\\vhb\proj\Raleigh\38286.01NCDOT W-5206AA NC 59\cad\tex\W-5206AA\Traffic\TrafficControl\TCP\W5206AA_TC_TCP_09.dgn
User:mthigpen

PROJ. REFERENCE NO.	SHEET NO.
W-5206AA	TMP-10

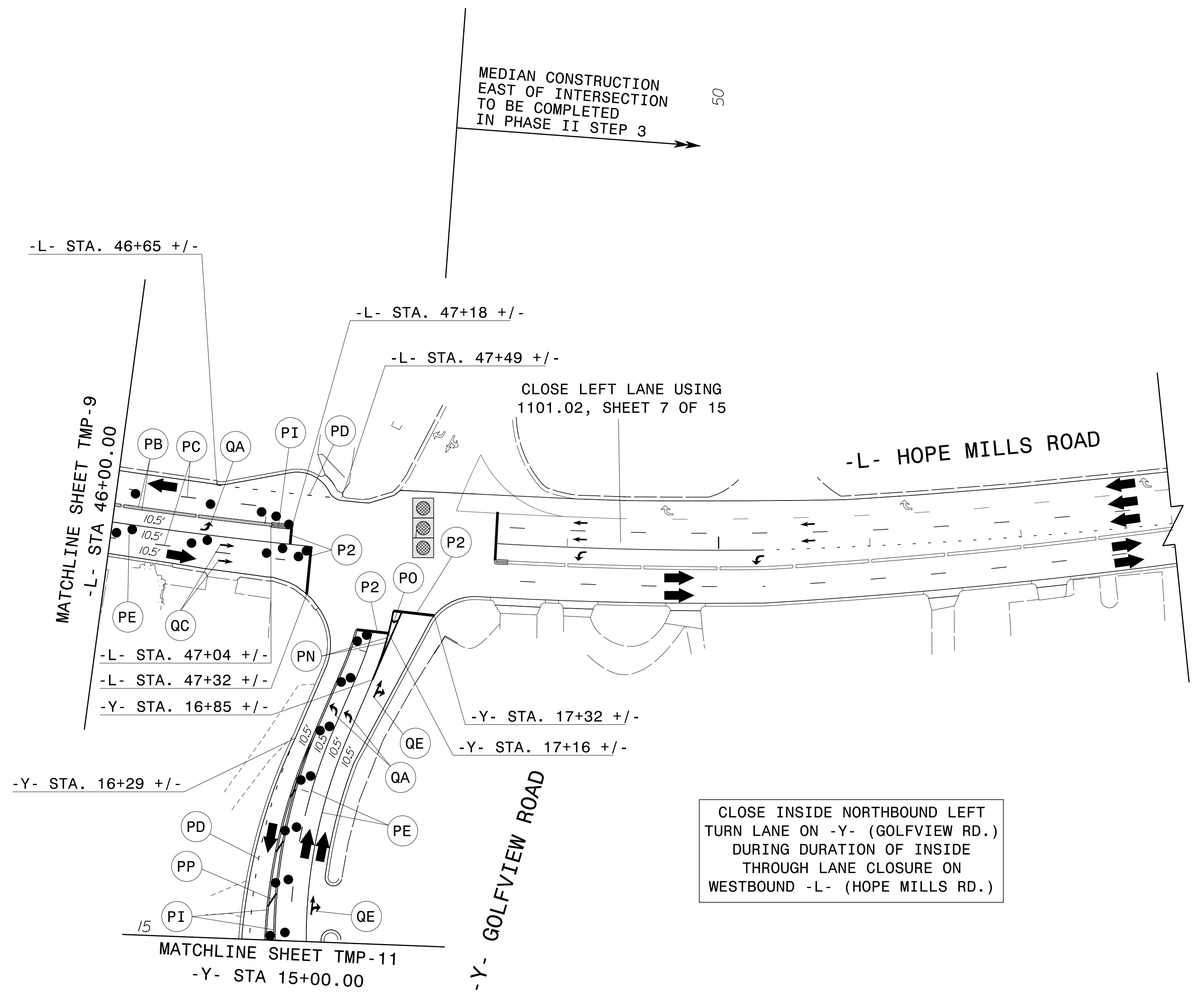

CLOSE INSIDE NORTHBOUND LEFT TURN LANE ON -Y- (GOLFVIEW RD.) DURING DURATION OF INSIDE THROUGH LANE CLOSURE ON WESTBOUND -L- (HOPE MILLS RD.)

APPROVED: A. Matthew Thigpen

Digitally signed by A. Matthew Thigpen
DN: C=US, O=NCDOT, OU=Vanasse Hangen Brustlin Inc., cn=A. Matthew Thigpen
2015.03.03 15:08:33 -05'00'

DATE:

SEAL

NORTH CAROLINA PROFESSIONAL SEAL 034343 ENGINEER A. MATTHEW THIGPEN

DIVISION OF HIGHWAYS
STATE OF NORTH CAROLINA
DEPARTMENT OF TRANSPORTATION
WORK ZONE TRAFFIC CONTROL

PHASE II STEP 2
DETAIL

3/3/2015
\\vhb\proj\Raleigh\38286.01NCDOT W-5206AA NC 59\cad\te\W-5206AA\Traffic\TrafficControl\TCP\W5206AA_TC_TCP_10.dgn
User:mthigpen

PROJ. REFERENCE NO.	SHEET NO.
W-5206AA	TMP-11

CLOSE INSIDE NORTHBOUND LEFT TURN LANE ON -Y- (GOLFVIEW RD.) DURING DURATION OF INSIDE THROUGH LANE CLOSURE ON WESTBOUND -L- (HOPE MILLS RD.)

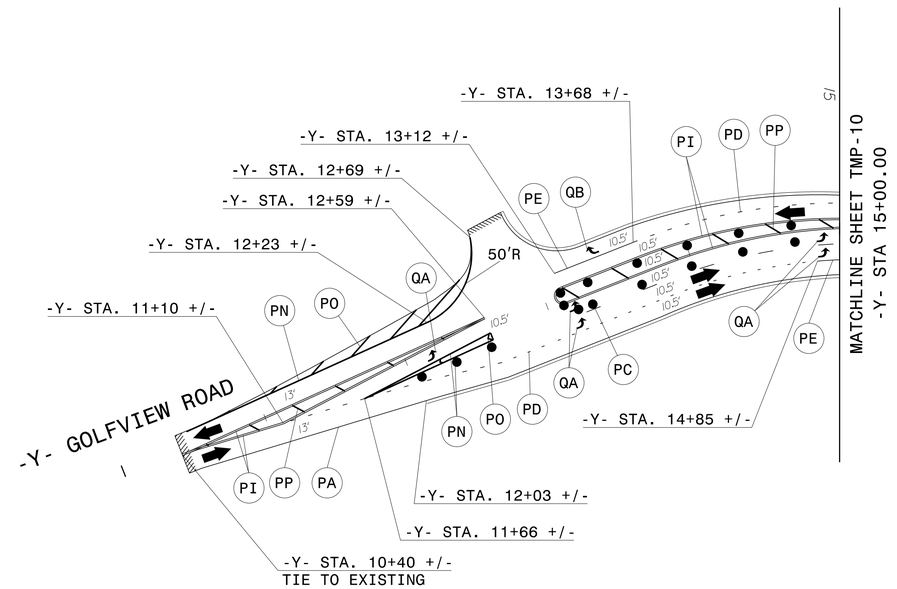

APPROVED: A. Matthew Thigpen

DATE:

Digitally signed by A. Matthew Thigpen, P.E.
DN: c=US, o=Raleigh, NC, ou=Transportation Mobility & Safety Division, o=Kimley-Horn and Associates, Inc., cn=A. Matthew Thigpen
Date: 2015.03.03 15:09:52 -05'00'

SEAL

NORTH CAROLINA PROFESSIONAL SEAL 034343 ENGINEER A. MATTHEW THIGPEN

DIVISION OF HIGHWAYS STATE OF NORTH CAROLINA DEPARTMENT OF TRANSPORTATION WORK ZONE TRAFFIC CONTROL

PHASE II STEP 2
DETAIL

3/3/2015
\\vhb\proj\Raleigh\38286.01NCDOT W-5206AA NC 59\cad\te\W-5206AA\Traffic\TrafficControl\TCP\W5206AA_TC_TCP_II.dgn
User:mthigpen

PROJ. REFERENCE NO.	SHEET NO.
W-5206AA	TMP-12

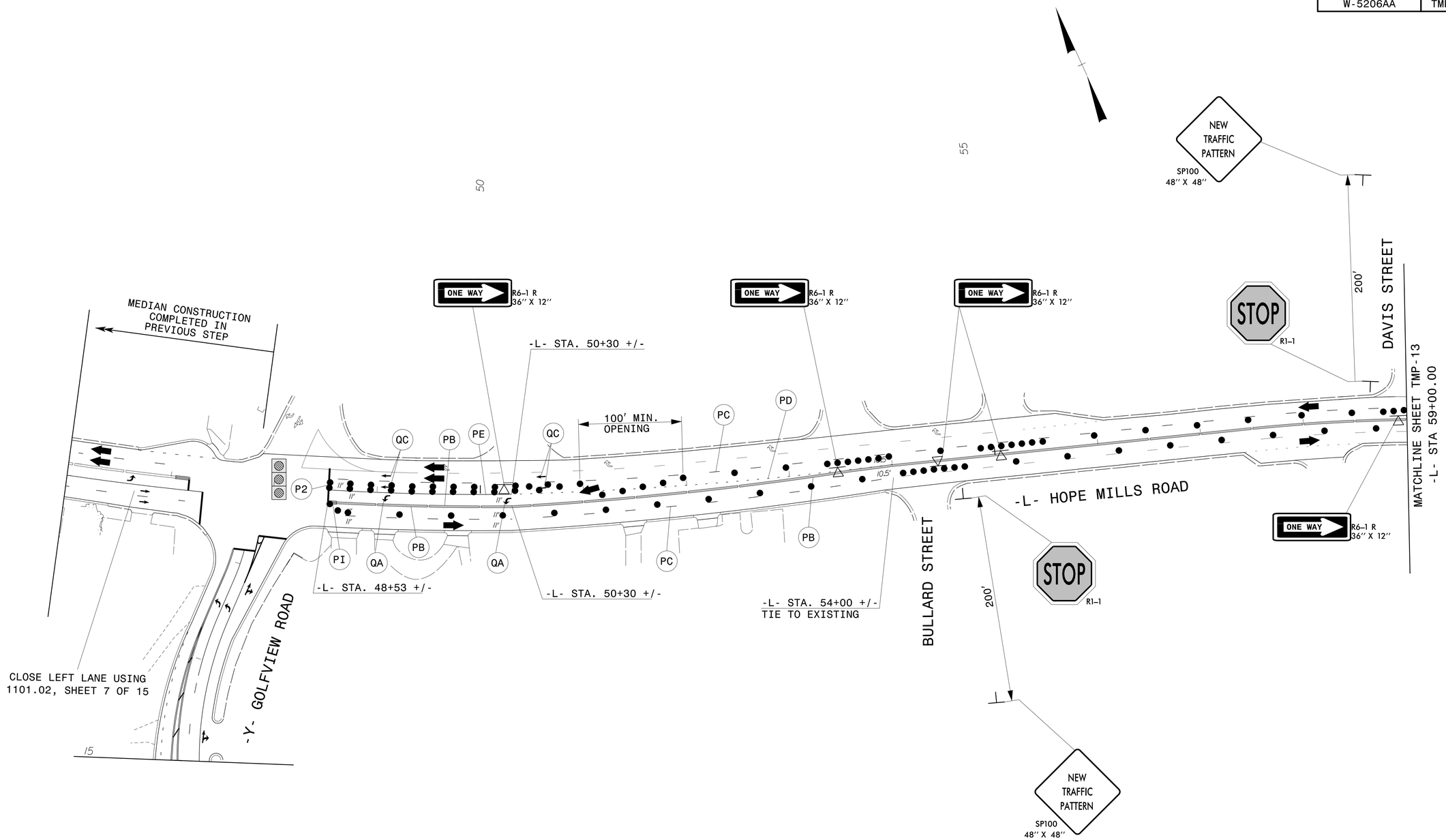

APPROVED: A. Matthew Thigpen DATE:

Digitally signed by A. Matthew Thigpen
DN: c=US, o=Hanger, Inc., ou=Hanger Hangers Brustlin Inc., cn=A. Matthew Thigpen
2015.03.03 15:17:10 -05'00'

SEAL

NORTH CAROLINA PROFESSIONAL SEAL 034343 ENGINEER A. MATTHEW THIGPEN

DIVISION OF HIGHWAYS STATE OF NORTH CAROLINA DEPARTMENT OF TRANSPORTATION WORK ZONE TRAFFIC CONTROL

PHASE II STEP 3
DETAIL

3/3/2015
\\vhb\proj\Raleigh\38286.01NCDOT W-5206AA NC 59\cad\te\W-5206AA\Traffic\TrafficControl\TCP\W5206AA_TC_TCP_12.dgn
User:mthigpen

PROJ. REFERENCE NO.	SHEET NO.
W-5206AA	TMP-13

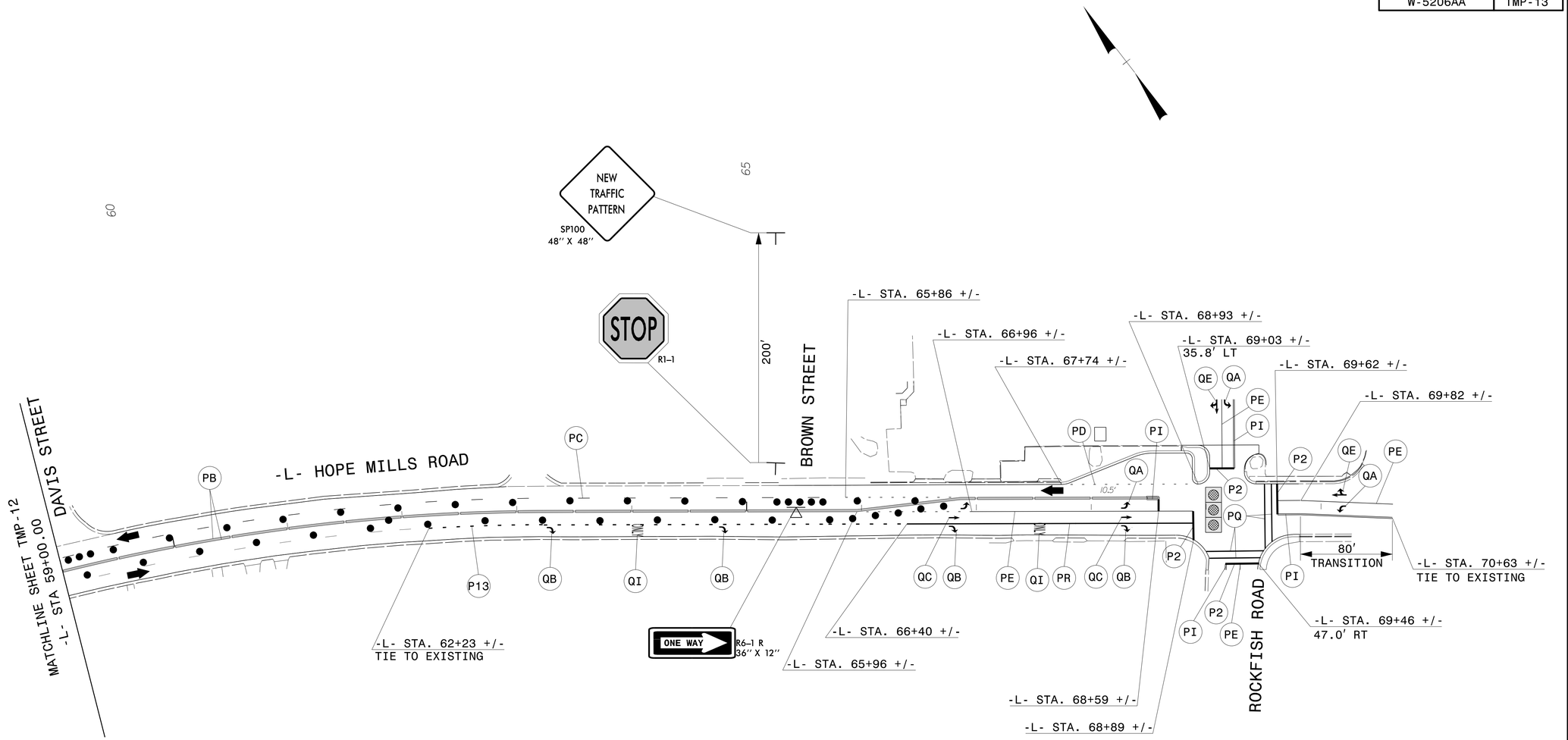

APPROVED: A. Matthew Thigpen DATE:

Digitally signed by A. Matthew Thigpen
DN: c=US, o=Raleigh, NC, cn=Matthew.Thigpen@rhk.com, o=Vanasse Hangen Brustlin Inc., ou=A. Matthew Thigpen
2015.03.03 15:12:44 -05'00'

SEAL

NORTH CAROLINA PROFESSIONAL SEAL 034343 ENGINEER A. MATTHEW THIGPEN

DIVISION OF HIGHWAYS · STATE OF NORTH CAROLINA · DEPARTMENT OF TRANSPORTATION · WORK ZONE TRAFFIC CONTROL

PHASE II STEP 3
DETAIL

3/3/2015
\\vhb\proj\Raleigh\38286.0\NCDOT W-5206AA NC 59\cad\te\W-5206AA\Traffic\TrafficControl\TCP\W5206AA_TC_TCP_13.dgn
User:mthigpen

PROJECT REFERENCE NO.	SHEET NO.
W-5206AA	PMP-1

APPROVED: A. Matthew Thigpen
DATE:
Digitally signed by A. Matthew Thigpen
DN: c=US, o=Raleigh, NC, email=MThigpen@vhb.com, o=Vanasse Hangen Brustlin Inc., cn=A. Matthew Thigpen
Date: 2015.03.03 15:14:12 -05'00'

SEAL

NORTH CAROLINA PROFESSIONAL SEAL 034343 ENGINEER A. MATTHEW THIGPEN

STATE OF NORTH CAROLINA
DEPARTMENT OF TRANSPORTATION

PAVEMENT MARKING PLAN
CUMBERLAND COUNTY

LOCATION: NC 59 (MAIN STREET /HOPE MILLS ROAD) FROM SR 1003 (CAMDEN ROAD) TO SR 1112 (ROCKFISH ROAD)

T.I.P.: W-5206AA

CONTRACT:

INDEX

SHEET NO.	DESCRIPTION
PMP-1	PAVEMENT MARKING PLAN TITLE AND SCHEDULE SHEET
PMP-2	CROSSWALK PAVEMENT MARKING GUIDANCE DETAIL
PMP-3	REVISED PAVEMENT MARKING ROADWAY STANDARD DRAWING
PMP-4-9	PAVEMENT MARKING DETAIL

PAVEMENT MARKING SCHEDULE

SYMBOL	DESCRIPTION	TOTAL QUANTITY
	THERMOPLASTIC (24", 120 MILS)	TOTAL 418 LF
T2	WHITE STOPBAR	
	THERMOPLASTIC (4", 120 MILS)	TOTAL 10483 LF
TC	10 FT. WHITE SKIP	
TD	3 FT. - 9 FT./SP WHITE MINISKIP	
TE	WHITE SOLID LANE LINE	
TI	YELLOW DOUBLE CENTER	
	THERMOPLASTIC (4", 90 MILS)	TOTAL 11117 LF
TA	WHITE EDGELINE	
TB	YELLOW EDGELINE	
	THERMOPLASTIC (8", 90 MILS)	TOTAL 1281 LF
TN	WHITE GORELINE	
TO	WHITE DIAGONAL	
TP	YELLOW DIAGONAL	
	THERMOPLASTIC (8", 120 MILS)	TOTAL 556 LF
T13	3 FT. - 9 FT./SP WHITE MINISKIP	
TQ	WHITE CROSSWALK LINE	
TR	WHITE SOLID LANE LINE	
	THERMOPLASTIC (12", 90 MILS)	TOTAL 104 LF
TU	WHITE DIAGONAL	
	THERMOPLASTIC PAVEMENT MARKING SYMBOLS (90 MILS)	TOTAL 79 EA
UA	LEFT TURN ARROW	
UB	RIGHT TURN ARROW	
UC	STRAIGHT ARROW	
UE	COMBO. STRAIGHT/RIGHT	
	THERMOPLASTIC PAVEMENT MARKING CHARACTER (120 MILS)	TOTAL 8 EA
UI	ALPHANUMERIC CHARACTER	
	PERMANENT RAISED PAVEMENT MARKERS	TOTAL 510 EA
MA	YELLOW & YELLOW	
MB	CRYSTAL & RED	

PLAN REVIEWED BY: N.C.D.O.T. SIGNING AND DELINEATION UNIT

_____ SIGNING & DELINEATION REGIONAL ENGINEER

_____ SIGNING & DELINEATION PROJECT DESIGN ENGINEER/TECHNICIAN

STATE OF NORTH CAROLINA DEPARTMENT OF TRANSPORTATION

ROADWAY STANDARD DRAWING

THE FOLLOWING ROADWAY STANDARDS AS APPEAR IN "ROADWAY STANDARD DRAWINGS" - PROJECT SERVICES UNIT - N.C. DEPARTMENT OF TRANSPORTATION - RALEIGH, N.C., DATED JANUARY 2012 ARE APPLICABLE TO THIS PROJECT AND BY REFERENCE HEREBY ARE CONSIDERED A PART OF THESE PLANS:

STD. NO.	TITLE
1205.01	PAVEMENT MARKINGS - LINE TYPES AND OFFSETS
1205.02	PAVEMENT MARKINGS - TWO-LANE AND MULTILANE ROADWAYS
1205.04	PAVEMENT MARKINGS - INTERSECTIONS
1205.05	PAVEMENT MARKINGS - TURN LANES
1205.06	PAVEMENT MARKINGS - LANE DROPS
1205.08	PAVEMENT MARKINGS - SYMBOLS AND WORD MESSAGES
1205.09	PAVEMENT MARKINGS - PAINTED ISLANDS
1250.01	RAISED PAVEMENT MARKERS - INSTALLATION SPACING
1251.01	RAISED PAVEMENT MARKERS - PERMANENT AND TEMPORARY
1261.01	GUARDRAIL AND BARRIER DELINEATORS - INSTALLATION SPACING
1261.02	GUARDRAIL AND BARRIER DELINEATORS - TYPES AND MOUNTING
1262.01	GUARDRAIL END DELINEATION

GENERAL NOTES

THE FOLLOWING GENERAL NOTES APPLY AT ALL TIMES FOR THE DURATION OF THE CONSTRUCTION PROJECT, EXCEPT WHEN OTHERWISE NOTED IN THE PLAN, OR DIRECTED BY THE ENGINEER.

A) INSTALL PAVEMENT MARKINGS AND PAVEMENT MARKERS ON THE FINAL SURFACE AS FOLLOWS:

ROAD NAME	MARKING	MARKER
-L- LINE, -Y- LINES	THERMOPLASTIC	PERMANENT RAISED

B) TIE PROPOSED PAVEMENT MARKING LINES TO EXISTING PAVEMENT MARKING LINES.

C) REMOVE/REPLACE ANY CONFLICTING/DAMAGED PAVEMENT MARKINGS AND MARKERS.

D) PASSING ZONES WILL BE DETERMINED IN THE FIELD AND MUST BE APPROVED BY THE ENGINEER.

E) STOP BAR LOCATION AT NON-SIGNALIZED INTERSECTIONS MAY BE ADJUSTED AS DIRECTED BY THE ENGINEER.

F) UNLESS OTHERWISE SPECIFIED, HEATED-IN-PLACE THERMOPLASTIC MAY BE USED IN LIEU OF EXTRUDED THERMOPLASTIC FOR STOP BARS, SYMBOLS, CHARACTERS AND DIAGONALS. IF HEATED-IN-PLACE IS USED, IT SHALL BE PAID FOR USING THE EXTRUDED THERMOPLASTIC PAY ITEM.

G) REFER TO APPROVED TRAFFIC SIGNAL PLANS FOR STOP BAR PLACEMENT AT SIGNALIZED INTERSECTIONS.

PLAN PREPARED BY: VHB Engineering NC, P.C.

A. MATTHEW THIGPEN, PE PROJECT ENGINEER

vhb 4000 WestChase Boulevard Suite 530 Raleigh, NC 27607 NC License No. C-3705

3/3/2015 3:46:50 PM S:\Projects\Raleigh\38286.01 NCDOT W-5206AA NC 59\cad\te\W-5206AA\Traffic\TrafficControl\TCP\W5206AA_rdy_bdr.dgn
User: mthigpen

PROJECT REFERENCE NO.	SHEET NO.
W-5206AA	PMP-2

APPROVED: _____

DATE: _____

SEAL

REVISIONS

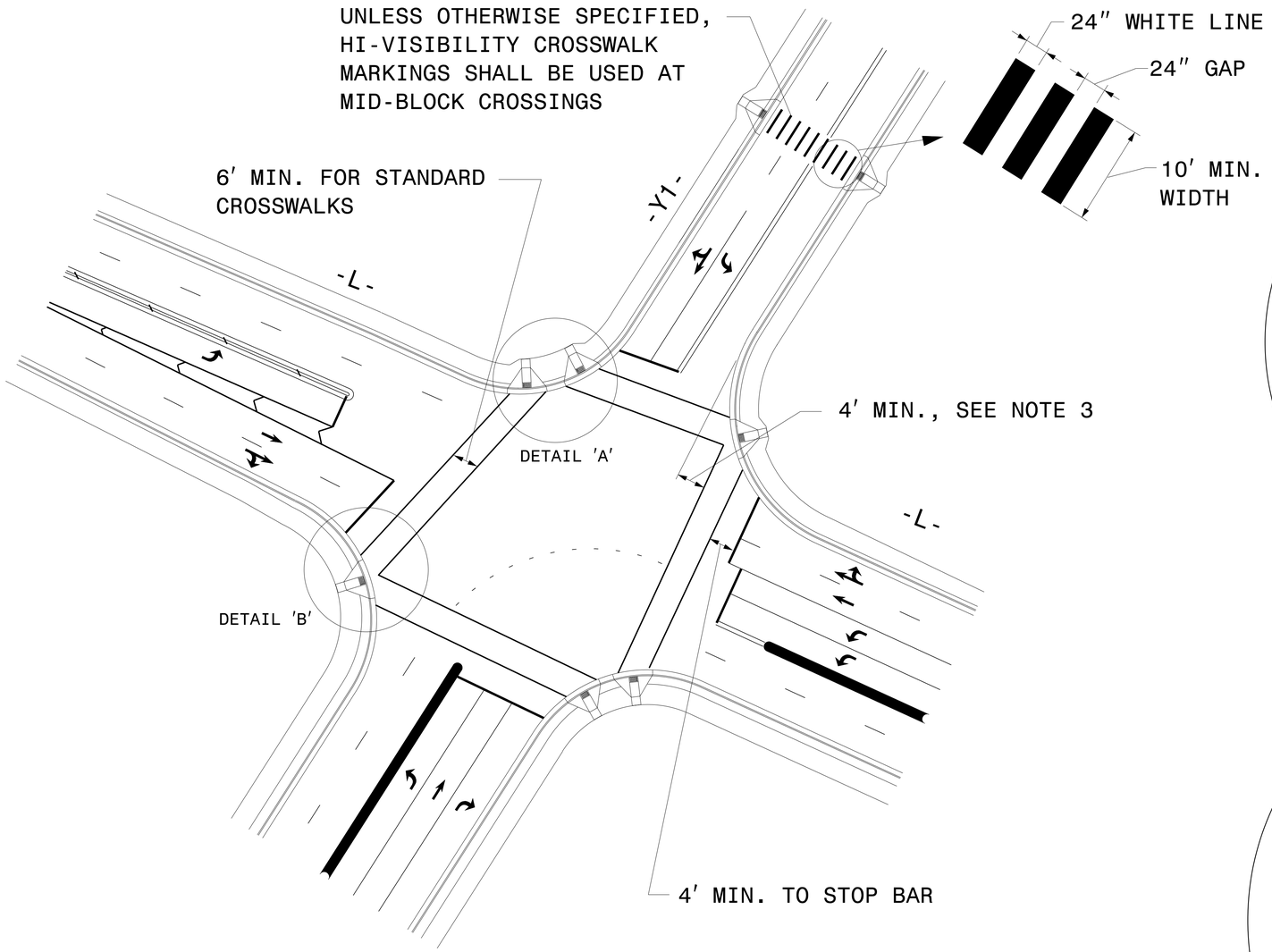

GUIDANCE DETAIL FOR CROSSWALK MARKINGS

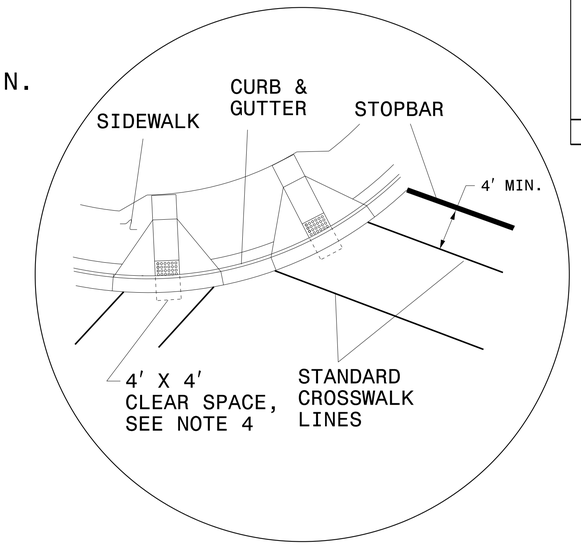

DETAIL 'A'- DUAL CURB RAMPS

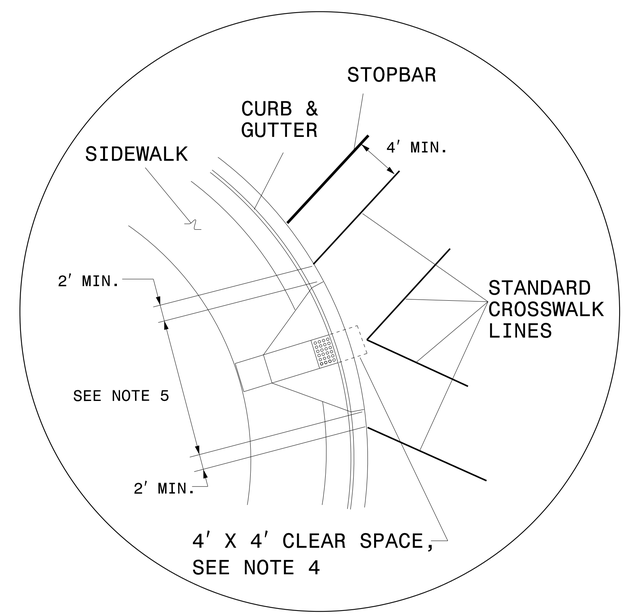

DETAIL 'B'- SINGLE DIAGONAL CURB RAMP

NOTES:

1. USE THE DETAILS ABOVE AND THE FOLLOWING NOTES FOR GUIDANCE IN PLACING CROSSWALK MARKINGS NOT STATIONED ON THE DETAIL SHEETS OR WHEN FIELD ADJUSTMENTS REQUIRED MOVING STATIONED MARKINGS AS DIRECTED BY THE ENGINEER. REFER TO NCDOT ROADWAY STANDARD DRAWINGS, MUTCD AND ADA STANDARDS FOR ADDITIONAL GUIDANCE.

2. THE CROSSWALK MARKINGS SHOWN ON THE ABOVE DETAILS ARE FOR REFERENCE ONLY. ONLY INSTALL CROSSWALK MARKINGS WHERE SHOWN ON THE DETAIL SHEETS OR AS DIRECTED BY THE ENGINEER. THE CROSSWALK MARKING TYPE, STANDARD OR HI-VISIBILITY, SHALL BE INSTALL AS SPECIFIED ON THE DETAIL SHEETS OR AS DIRECTED BY THE ENGINEER.

3. SET BACK DISTANCE FROM INSIDE CROSSWALK MARKING TO NEAREST EDGE OF TRAVEL IS 4' MIN.

4. BEYOND THE BOTTOM GRADE BRAKE, A CLEAR SPACE OF 4' X 4' MINIMUM SHALL BE PROVIDED WITHIN THE MARKINGS.

5. SINGLE DIAGONAL CURB RAMPS WITH FLARED SIDES SHALL HAVE A SEGMENT OF CURB 2 FEET LONG MINIMUM LOCATED ON EACH SIDE OF THE CURB RAMP AND WITHIN THE MARKED CROSSING, SEE DETAIL 'B'.

6. CURB RAMPS SHALL BE CONSTRUCTED IN ACCORDANCE TO THE LATEST NCDOT ROADWAY STANDARD DRAWINGS.

CROSSWALK PAVEMENT MARKING GUIDANCE DETAIL

3/3/2015
J:\Raleigh\38286.01 NCDOT W-5206AA NC 59\cad\te\W-5206AA\Traffic\TrafficControl\TCP\W5206AA_rdy_bdr.dgn
jsarrington

PROJECT REFERENCE NO.	SHEET NO.
W-5206AA	PMP-3

APPROVED: _____

DATE: _____

SEAL

STATE OF NORTH CAROLINA
DEPT. OF TRANSPORTATION
DIVISION OF HIGHWAYS
RALEIGH, N.C.

1-12

ENGLISH DETAIL DRAWING FOR
PAVEMENT MARKINGS
LANE DROPS

LANE DROP AT AN INTERSECTION

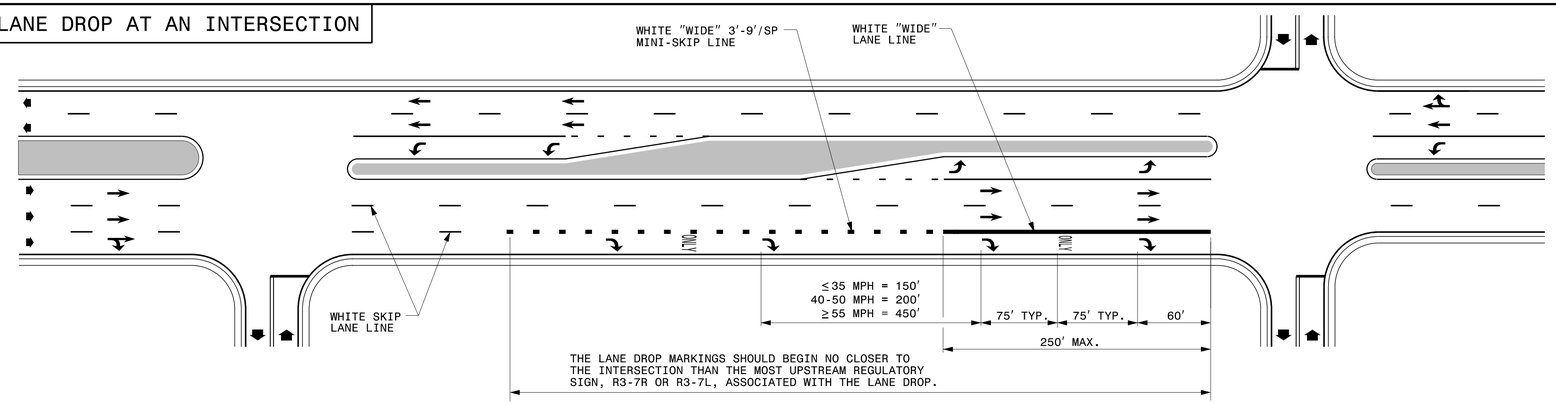

LANE DROP AT AN INTERSECTION WITH AN AUXILIARY LANE

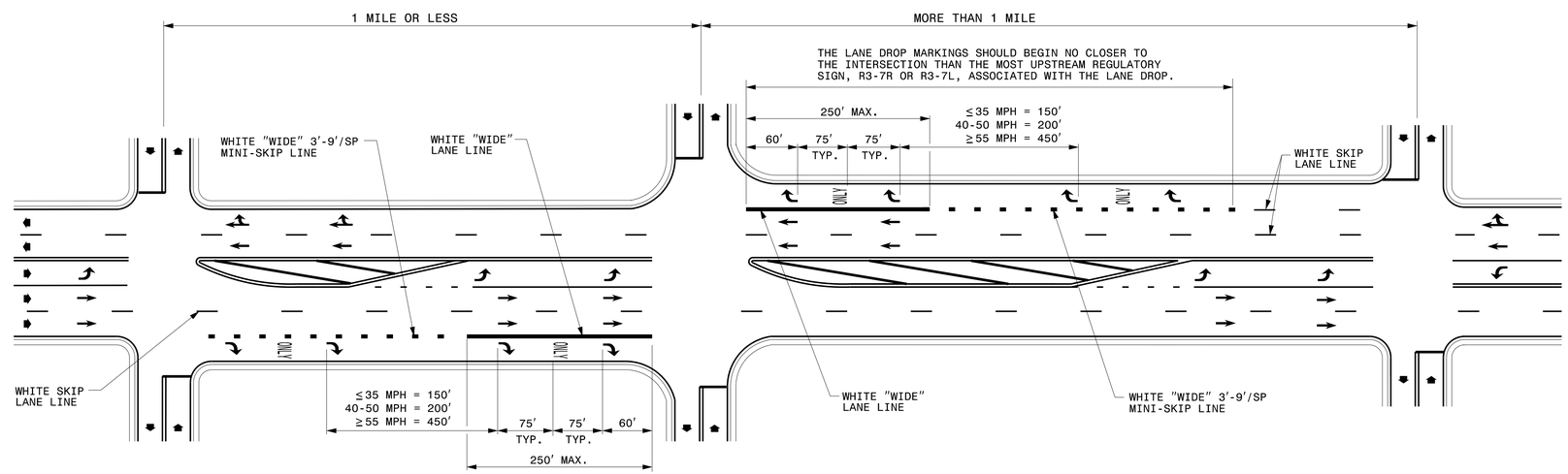

GENERAL NOTES:

1- USE THE GUIDANCE SHOWN ON THE ABOVE DETAILS IN CONJUNCTION WITH INTERSECTION GUIDANCE SHOWN ON ROADWAY STANDARD DRAWING 1205.04.

2- LANE LINES INDICATED AS "WIDE" SHALL BE AT LEAST TWICE THE WIDTH OF THE NORMAL LINE.

LEGEND

W = WIDTH OF TRAVEL LANE

DIRECTION OF TRAFFIC FLOW

ONLY PAVEMENT MARKING SYMBOLS & CHARACTERS

SHEET 1 OF 3

1205D06

STATE OF NORTH CAROLINA
DEPT. OF TRANSPORTATION
DIVISION OF HIGHWAYS
RALEIGH, N.C.

1-12

ENGLISH DETAIL DRAWING FOR
PAVEMENT MARKINGS
LANE DROPS

SHEET 1 OF 3

1205D06

REVISED PAVEMENT MARKING ROADWAY STANDARD DRAWING

3/3/2015
X:\Projects\Raleigh\38286.01 NCDOT W-5206AA NC 59\cad\ts\W-5206AA\TrafficControl\TCP\W5206A_rdy_bdr.dgn
jsermingson

PROJECT REFERENCE NO.	SHEET NO.
W-5206AA	PMP-4

APPROVED: A. Matthew Thigpen

DATE:

Digitally signed by A. Matthew Thigpen
DN: c=US, ou=Raleigh, NC, email=MThigpen@rhb.com, o=Vanasse Hangen Brustlin Inc., cn=A. Matthew Thigpen
Date: 2015.03.03 15:15:47 -05'00'

SEAL

NORTH CAROLINA PROFESSIONAL SEAL 034343 ENGINEER A. MATTHEW THIGPEN

DETAIL 1

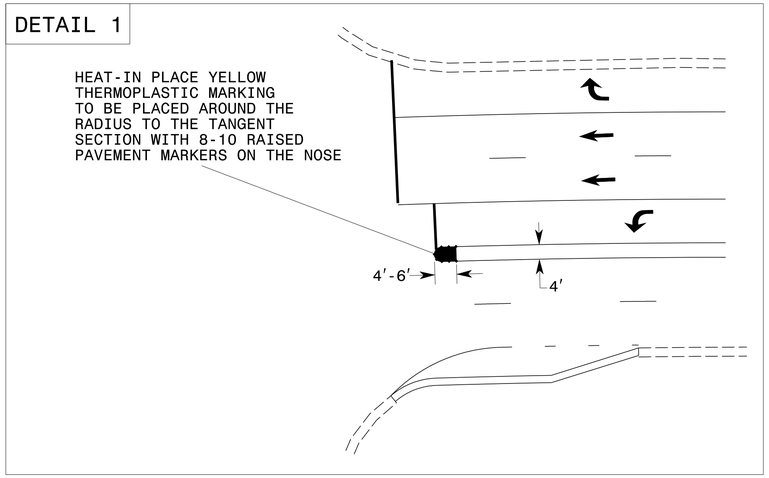

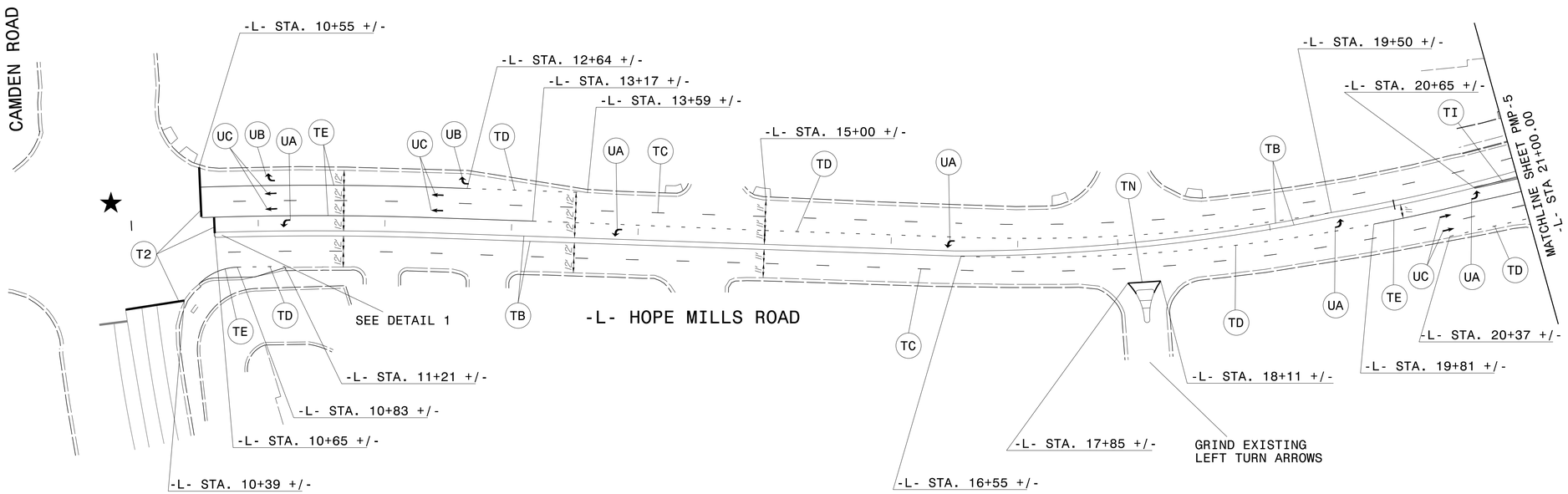

PAVEMENT MARKING SCHEDULE

SYMBOL	DESCRIPTION
T2	WHITE STOPBAR (24", 120 MIL)
TC	10 FT. WHITE SKIP (4", 120 MIL)
TD	3FT.- 9FT./SP WHITE MINISKIP (4", 120 MIL)
TE	WHITE SOLID LANE LINE (4", 120 MIL)
TI	YELLOW DOUBLE CENTER (4", 120 MIL)
TN	WHITE GORELINE (8", 90 MIL)
UA	LEFT TURN ARROW (90 MIL)
UB	RIGHT TURN ARROW (90 MIL)
UC	STRAIGHT ARROW (90 MIL)
UI	ALPHANUMERIC CHAR. (120 MIL)

★ SIGNALIZED

PAVEMENT MARKING DETAIL

3/3/2015
12:16:50 p:\Raleigh\38286.01 NCDOT W-5206AA NC 59\cad\te\W-5206AA\Traffic\TrafficControl\TCP\W5206AA_pm_psh_04.dgn
User:thigpen

PROJECT REFERENCE NO.	SHEET NO.
W-5206AA	PMP-5

APPROVED: A. Matthew Thigpen

DATE:

Digitally signed by A. Matthew Thigpen
DN: c=US, st=Raleigh, NC, email=MThigpen@vhb.com, o=Vanasse Hangen Brustlin Inc., cn=A. Matthew Thigpen
Date: 2015.03.03 15:17:20 -05'00'

SEAL

NORTH CAROLINA PROFESSIONAL SEAL 034343 ENGINEER A. MATTHEW THIGPEN

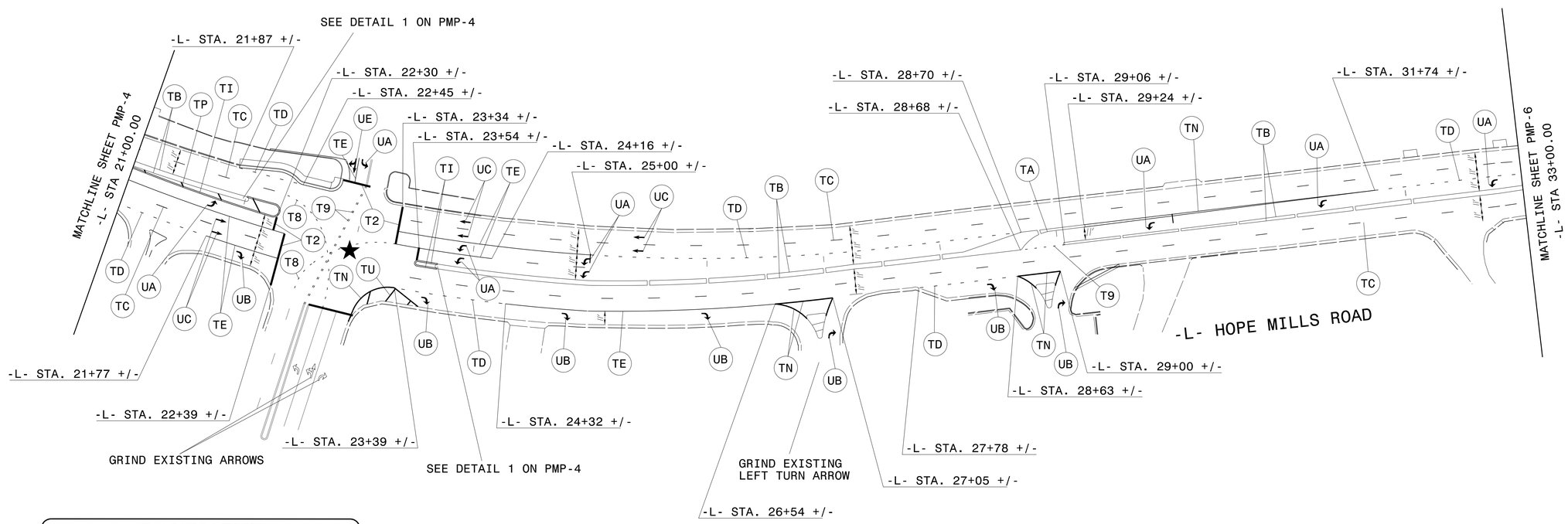

PAVEMENT MARKING SCHEDULE

SYMBOL	DESCRIPTION
T2	WHITE STOPBAR (24", 120 MIL)
T9	2FT.- 6FT./SP YELLOW MINISKIP (4", 120 MIL)
TC	10 FT. WHITE SKIP (4", 120 MIL)
TD	3FT.- 9FT./SP WHITE MINISKIP (4", 120 MIL)
TE	WHITE SOLID LANE LINE (4", 120 MIL)
TI	YELLOW DOUBLE CENTER (4", 120 MIL)
TN	WHITE GORELINE (8", 90 MIL)
TP	YELLOW DIAGONAL (8", 90 MIL)
TU	WHITE DIAGONAL (12", 90 MIL)
UA	LEFT TURN ARROW (90 MIL)
UB	RIGHT TURN ARROW (90 MIL)
UC	STRAIGHT ARROW (90 MIL)
UE	COMBO. RIGHT/STRAIGHT ARROW (120 MIL)
UI	ALPHANUMERIC CHAR. (120 MIL)

★ SIGNALIZED

PAVEMENT MARKING DETAIL

3/3/2015
\\vhb.pro\Raleigh\38286.01 NCDOT W-5206AA NC 59\cad\te\W-5206AA\TrafficControl\TCP\W5206AA_pm_psh_05.dgn
User: thigpen

PROJECT REFERENCE NO.	SHEET NO.
W-5206AA	PMP-6

APPROVED: A. Matthew Thigpen

DATE:

Digitally signed by A. Matthew Thigpen
DN: c=US, o=Raleigh, NC, email=MThigpen@hb.com, o=Vanasse Hangen Brustlin Inc., cn=A. Matthew Thigpen
Date: 2015.03.03 15:19:00 -05'00'

SEAL

NORTH CAROLINA PROFESSIONAL SEAL 034343 ENGINEER A. MATTHEW THIGPEN

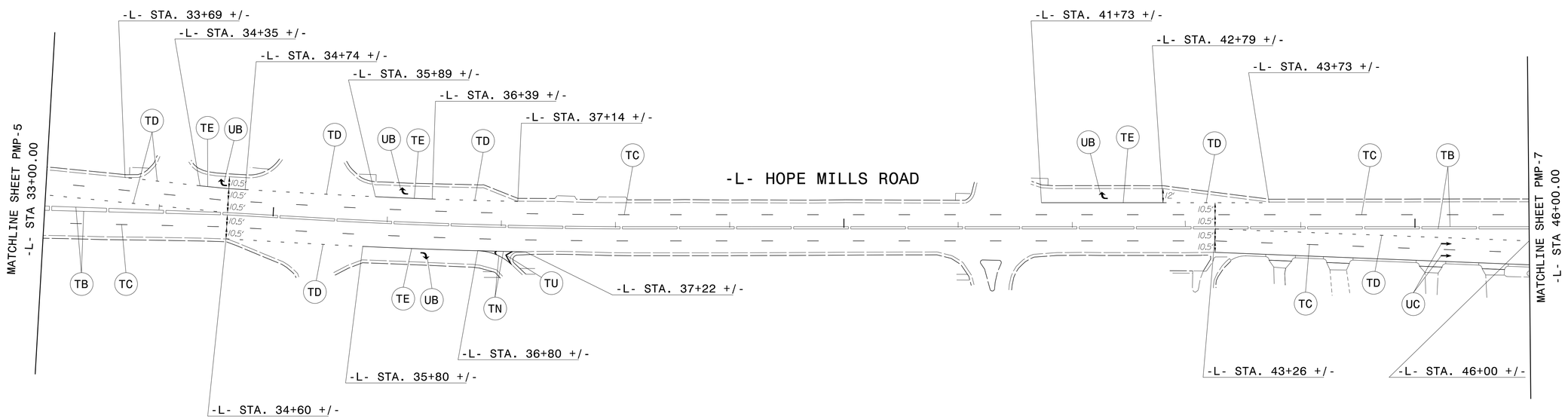

PAVEMENT MARKING SCHEDULE

SYMBOL	DESCRIPTION
TC	10 FT. WHITE SKIP (4", 120 MIL)
TD	3FT.- 9FT./SP WHITE MINISKIP (4", 120 MIL)
TE	WHITE SOLID LANE LINE (4", 120 MIL)
TN	WHITE GORELINE (8", 90 MIL)
TU	WHITE DIAGONAL (12", 90 MIL)
UB	RIGHT TURN ARROW (90 MIL)
UC	STRAIGHT ARROW (90 MIL)
UI	ALPHANUMERIC CHAR. (120 MIL)

PAVEMENT MARKING DETAIL

3/3/2015
\\hbpro\Raleigh\38286.01 NCDOT W-5206AA NC 59\cad\ts\W-5206AA\Traffic\TrafficControl\TCP\W5206AA_pm_psh_06.dgn
User:thigpen

PROJECT REFERENCE NO.	SHEET NO.
W-5206AA	PMP-7

APPROVED: A. Matthew Thigpen

Digitally signed by A. Matthew Thigpen
DN: c=US, o=Raleigh, NC, email=matthew.thigpen@hdr.com, o=Vanasse Hangen Brustlin Inc., cn=A. Matthew Thigpen
Date: 2015.03.03 15:20:41 -05'00'

DATE:

SEAL

NORTH CAROLINA PROFESSIONAL SEAL 034343 ENGINEER A. MATTHEW THIGPEN

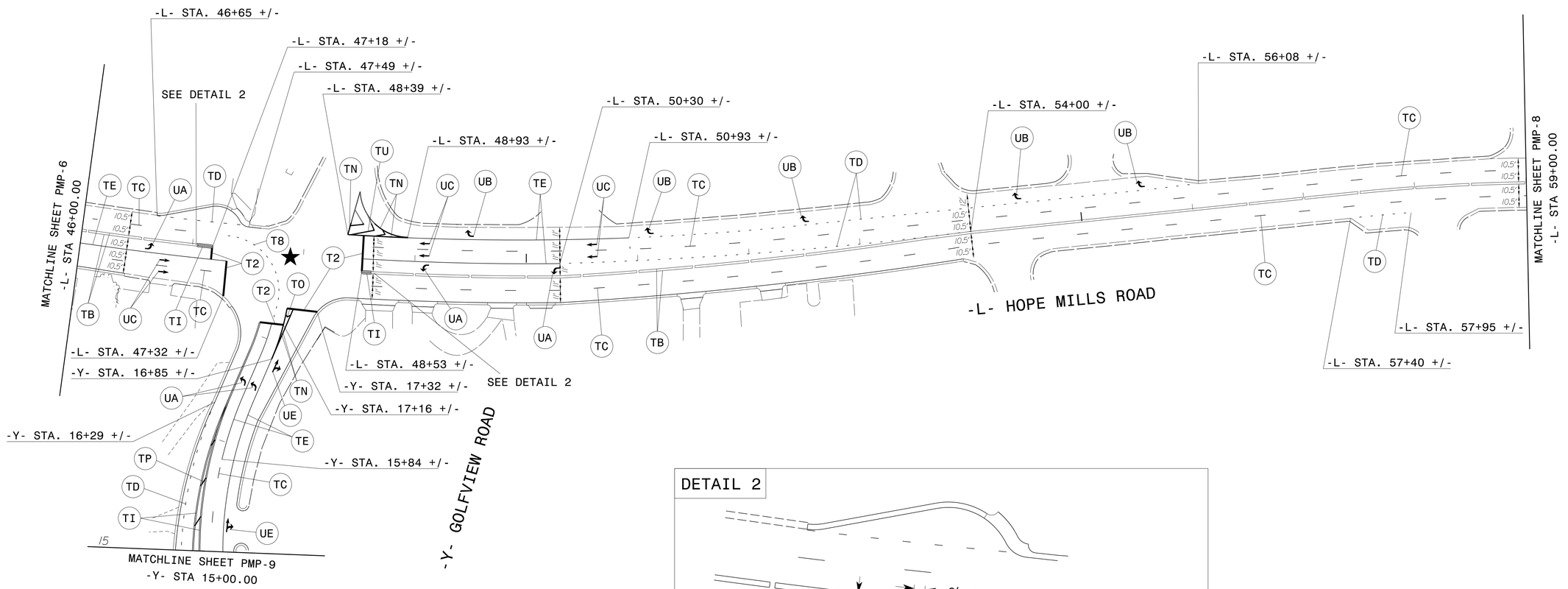

PAVEMENT MARKING SCHEDULE

SYMBOL	DESCRIPTION
T2	WHITE STOPBAR (24", 120 MIL)
T8	2FT.- 6FT./SP WHITE MINISKIP (4", 120 MIL)
TC	10 FT. WHITE SKIP (4", 120 MIL)
TD	3FT.- 9FT./SP WHITE MINISKIP (4", 120 MIL)
TE	WHITE SOLID LANE LINE (4", 120 MIL)
TI	YELLOW DOUBLE CENTER (4", 120 MIL)
TN	WHITE GORELINE (8", 90 MIL)
TO	WHITE DIAGONAL (8", 90 MIL)
TP	YELLOW DIAGONAL (8", 90 MIL)
TU	WHITE DIAGONAL (12", 90 MIL)
UA	LEFT TURN ARROW (90 MIL)
UB	RIGHT TURN ARROW (90 MIL)
UC	STRAIGHT ARROW (90 MIL)
UE	COMBO. RIGHT/STRAIGHT ARROW (120 MIL)

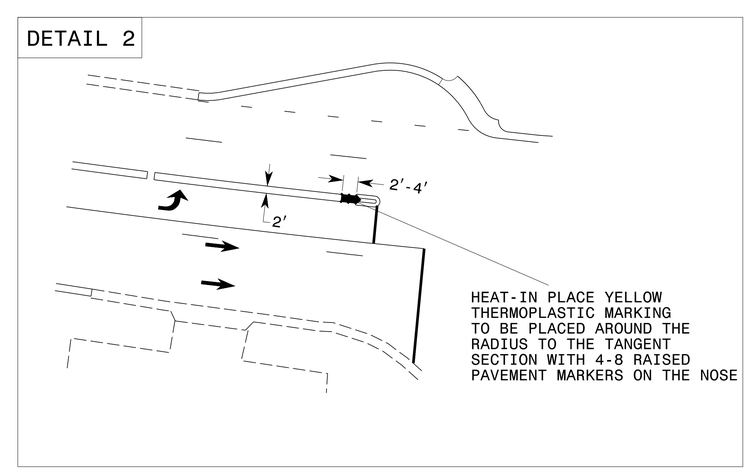

★ SIGNALIZED

PAVEMENT MARKING DETAIL

3/3/2015
11:16:59
\\hdrnet\corp\Raleigh\38286.01 NCDOT W-5206AA NC 59\cad\ts\W-5206AA\Traffic\TrafficControl\TCP\W5206AA_pm_psh_07.dgn
User:thigpen

PROJECT REFERENCE NO.	SHEET NO.
W-5206AA	PMP-8

APPROVED: A. Matthew Thigpen

Digitally signed by A. Matthew Thigpen
DN: c=US, o=Raleigh, NC, email=MThigpen@hdr.com, o=Vanasse Hangen Brustlin Inc., cn=A. Matthew Thigpen
Date: 2015.03.03 15:22:25 -05'00'

DATE:

SEAL

NORTH CAROLINA PROFESSIONAL SEAL 034343 ENGINEER A. MATTHEW THIGPEN

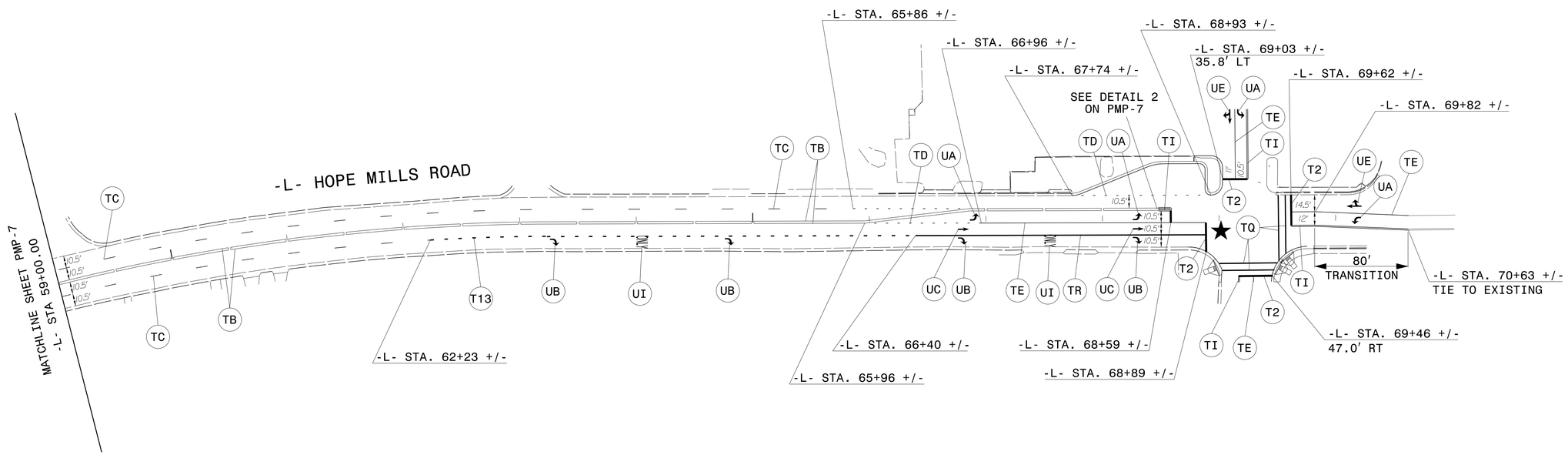

GRIND AND REMOVE EXISTING PAVEMENT MARKINGS FROM -L- STA 69+81+/- TO 70+63+/- AND INSTALL PAVEMENT MARKINGS AS SHOWN ON THIS SHEET.

PAVEMENT MARKING SCHEDULE

SYMBOL	DESCRIPTION
T2	WHITE STOPBAR (24", 120 MIL)
T13	3FT.- 9FT./SP WHITE MINISKIP (8", 120 MIL)
TC	10 FT. WHITE SKIP (4", 120 MIL)
TD	3FT.- 9FT./SP WHITE MINISKIP (4", 120 MIL)
TE	WHITE SOLID LANE LINE (4", 120 MIL)
TI	YELLOW DOUBLE CENTER (4", 120 MIL)
TR	WHITE SOLID LANE LINE (8", 120 MIL)
UA	LEFT TURN ARROW (90 MIL)
UB	RIGHT TURN ARROW (90 MIL)
UC	STRAIGHT ARROW (90 MIL)
UE	COMBO. RIGHT/STRAIGHT ARROW (90 MIL)
UI	ALPHANUMERIC CHAR. (120 MIL)

★ SIGNALIZED

PAVEMENT MARKING DETAIL

3/3/2015
3:36:05 PM
C:\Projects\Raleigh\38286.01 NCDOT W-5206AA NC 59\cad\te\W-5206AA\Traffic\TrafficControl\TCPW5206AA_pm_psh_08.dgn
User: thigpen

PROJECT REFERENCE NO.	SHEET NO.
W-5206AA	PMP-9

APPROVED: A. Matthew Thigpen

DATE:

Digitally signed by A. Matthew Thigpen
DN: c=US, o=Raleigh, NC, email=MThigpen@rhb.com, o=Kimley-Horn and Associates, Inc., cn=A. Matthew Thigpen
Date: 2015.03.03 15:24:10 -05'00'

SEAL

NORTH CAROLINA PROFESSIONAL SEAL 034343 ENGINEER A. MATTHEW THIGPEN

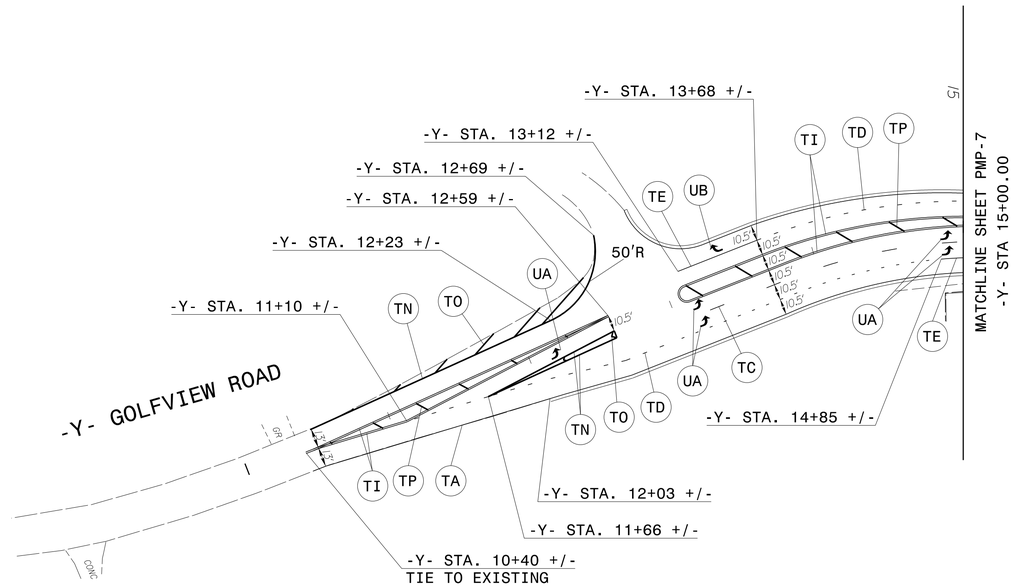

PAVEMENT MARKING SCHEDULE

SYMBOL	DESCRIPTION
TC	10 FT. WHITE SKIP (4", 120 MIL)
TD	3FT.- 9FT./SP WHITE MINISKIP (4", 120 MIL)
TE	WHITE SOLID LANE LINE (4", 120 MIL)
TI	YELLOW DOUBLE CENTER (4", 120 MIL)
TN	WHITE GORELINE (8", 90 MIL)
TO	WHITE DIAGONAL (8", 90 MIL)
TP	YELLOW DIAGONAL (8", 90 MIL)
UA	LEFT TURN ARROW (90 MIL)
UB	RIGHT TURN ARROW (90 MIL)

PAVEMENT MARKING DETAIL

3/3/2015
10:50:50 AM
J:\Proj\Raleigh\38286.01 NCDOT W-5206AA NC 59\cad\te\W-5206AA\Traffic\TrafficControl\TCP\W5206AA_pm_psh_09.dgn
User: mthigpen

TIP PROJECT: W-5206AA

CONTRACT: WBS 45336.1.27

See Sheet 1-A For Index of Sheets

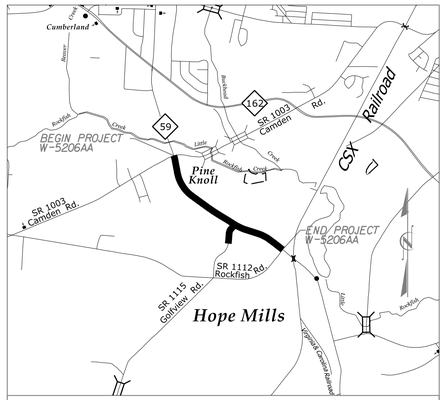

VICINITY MAP

STATE OF NORTH CAROLINA
DIVISION OF HIGHWAYS

PLAN FOR PROPOSED
HIGHWAY EROSION CONTROL

STATE OF NORTH CAROLINA
DIVISION OF HIGHWAYS

CUMBERLAND COUNTY

LOCATION: NC 59 (Main Street/Hope Mills Road) from SR 1003 (Camden Road) to SR 1112 (Rockfish Road)

TYPE OF WORK: Grading, Drainage, Paving, Signals, and Pavement Markings

STATE	STATE PROJECT REFERENCE NO.	SHEET NO.	TOTAL SHEETS
N.C.	W-5206AA	EC-1	

STATE PROJ. NO.	F.A. PROJ. NO.	DESCRIPTION
45336.1.27	HSIP-0059(8)	P.E.
45336.2.FD27	HSIP-0059(8)	R/W & UTILITIES
45336.3.FD27	HSIP-0059(8)	CONSTRUCTION

Eric M. Leonhart, EI
LEVEL III NAME

3502
LEVEL III CERTIFICATION NO.

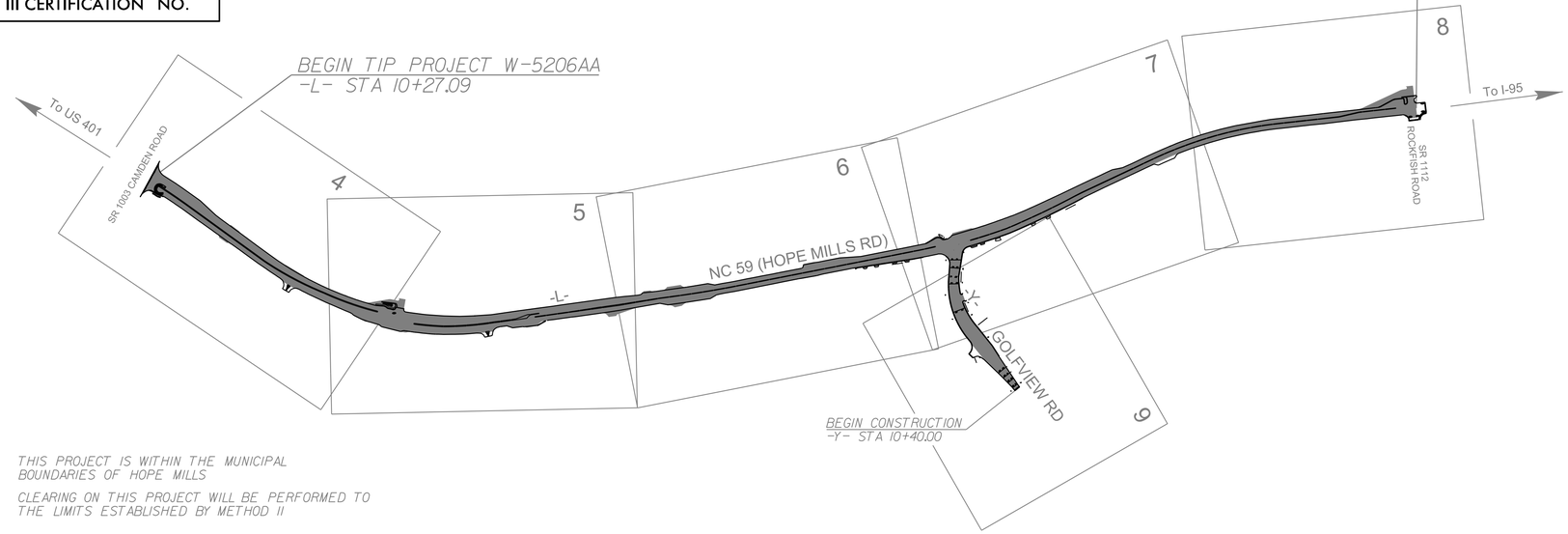

THIS PROJECT IS WITHIN THE MUNICIPAL BOUNDARIES OF HOPE MILLS

CLEARING ON THIS PROJECT WILL BE PERFORMED TO THE LIMITS ESTABLISHED BY METHOD II

EROSION AND SEDIMENT CONTROL MEASURES

Std. #	Description	Symbol
1630.03	Temporary Silt Ditch	TSD
1630.05	Temporary Diversion	TD
1605.01	Temporary Silt Fence	
1606.01	Special Sediment Control Fence	
1622.01	Temporary Berms and Slope Drains	
1630.02	Silt Basin Type B	
1633.01	Temporary Rock Silt Check Type-A	
	Temporary Rock Silt Check Type-A with Matting and Polyacrylamide (PAM)	
1633.02	Temporary Rock Silt Check Type-B	
	Wattle / Coir Fiber Wattle	EW CFW
	Wattle / Coir Fiber Wattle with Polyacrylamide (PAM)	
1634.01	Temporary Rock Sediment Dam Type-A	
1634.02	Temporary Rock Sediment Dam Type-B	
1635.01	Rock Pipe Inlet Sediment Trap Type-A	
1635.02	Rock Pipe Inlet Sediment Trap Type-B	
1630.04	Stilling Basin	
1630.06	Special Stilling Basin	
	Rock Inlet Sediment Trap:	
1632.01	Type A	A
1632.02	Type B	B
1632.03	Type C	C
	Skimmer Basin	
	Tiered Skimmer Basin	
	Infiltration Basin	

THIS PROJECT CONTAINS EROSION CONTROL PLANS FOR CLEARING AND GRUBBING PHASE OF CONSTRUCTION.

GRAPHIC SCALE

50 25 0 50 100
PLANS

THESE EROSION AND SEDIMENT CONTROL PLANS COMPLY WITH THE REGULATIONS SET FORTH BY THE NCG-010000 GENERAL CONSTRUCTION PERMIT EFFECTIVE AUGUST 3, 2011 ISSUED BY THE NORTH CAROLINA DEPARTMENT OF ENVIRONMENT AND NATURAL RESOURCES DIVISION OF WATER QUALITY.

Prepared In the Office of:

SUNGATE DESIGN GROUP, P.A.
915 JONES FRANKLIN ROAD
RALEIGH, NORTH CAROLINA 27606
NC COA No. C-0890

2012 STANDARD SPECIFICATIONS

Roadway Standard Drawings

The following roadway english standards as appear in "Roadway Standard Drawings"– Roadway Design Unit – N. C. Department of Transportation – Raleigh, N. C., dated January 2012 and the latest revison thereto are applicable to this project and by reference hereby are considered a part of these plans.

1604.01	Railroad Erosion Control Detail	1632.01	Rock Inlet Sediment Trap Type A
1605.01	Temporary Silt Fence	1632.02	Rock Inlet Sediment Trap Type B
1606.01	Special Sediment Control Fence	1632.03	Rock Inlet Sediment Trap Type C
1607.01	Gravel Construction Entrance	1633.01	Temporary Rock Silt Check Type A
1622.01	Temporary Berms and Slope Drains	1633.02	Temporary Rock Silt Check Type B
1630.01	Riser Basin	1634.01	Temporary Rock Sediment Dam Type A
1630.02	Silt Basin Type B	1634.02	Temporary Rock Sediment Dam Type B
1630.03	Temporary Silt Ditch	1635.01	Rock Pipe Inlet Sediment Trap Type A
1630.04	Stilling Basin	1635.02	Rock Pipe Inlet Sediment Trap Type B
1630.05	Temporary Diversion	1640.01	Coir Fiber Baffle
1630.06	Special Stilling Basin	1645.01	Temporary Stream Crossing
1631.01	Matting Installation		

1/19/2016
W:\5206AA_EC.dgn, tsh.dgn
eleonhart

PROJECT REFERENCE NO.	SHEET NO.
W-5206AA	EC-02
R/W SHEET NO.	
ROADWAY DESIGN ENGINEER	HYDRAULICS ENGINEER

WATTLE DETAIL

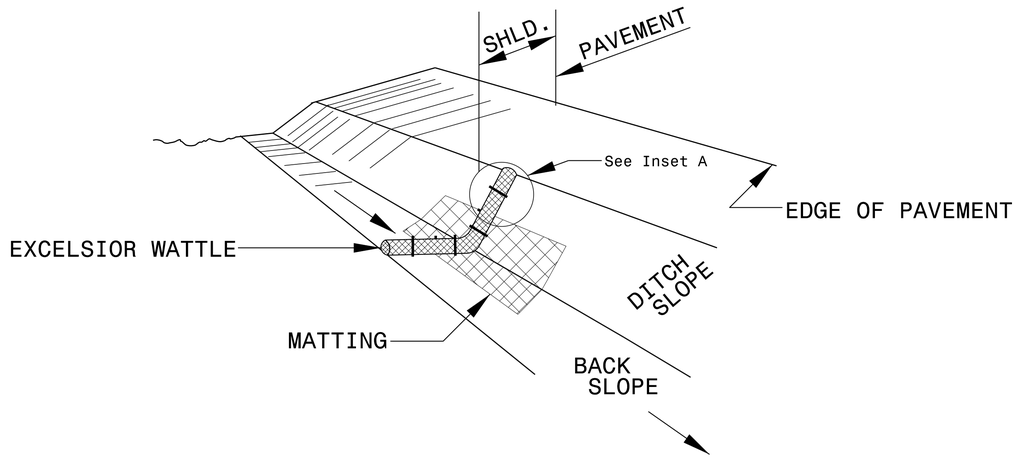

ISOMETRIC VIEW

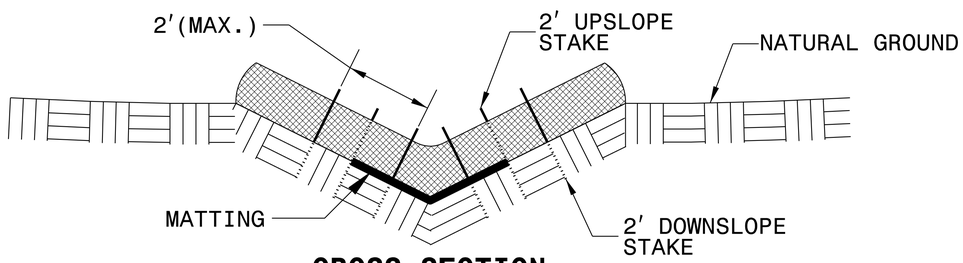

CROSS SECTION VEE DITCH

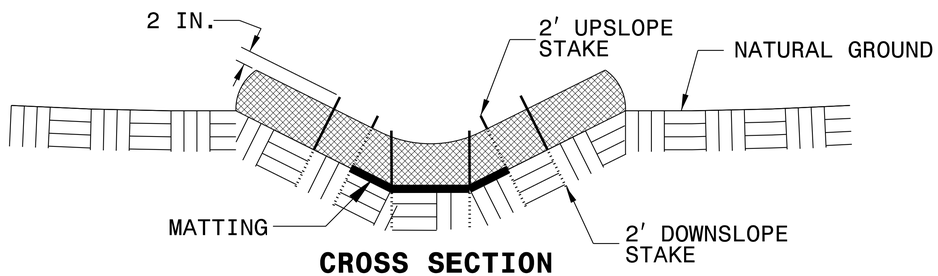

CROSS SECTION TRAPEZOIDAL DITCH

NOTES:

USE MINIMUM 12 IN. DIAMETER EXCELSIOR WATTLE.

USE 2 FT. WOODEN STAKES WITH A 2 IN. BY 2 IN. NOMINAL CROSS SECTION.

<u>ONLY</u> INSTALL WATTLE(S) TO A HEIGHT IN DITCH SO FLOW WILL NOT WASH AROUND WATTLE AND SCOUR DITCH SLOPES AND AS DIRECTED.

INSTALL A MINIMUM OF 2 UPSLOPE STAKES AND 4 DOWNSLOPE STAKES AT AN ANGLE TO WEDGE WATTLE TO BOTTOM OF DITCH.

PROVIDE STAPLES MADE OF 0.125 IN. DIAMETER STEEL WIRE FORMED INTO A U SHAPE NOT LESS THAN 12″ IN LENGTH.

INSTALL STAPLES APPROXIMATELY EVERY 1 LINEAR FOOT ON BOTH SIDES OF WATTLE AND AT EACH END TO SECURE IT TO THE SOIL.

INSTALL MATTING IN ACCORDANCE WITH SECTION 1631 OF THE STANDARD SPECIFICATIONS.

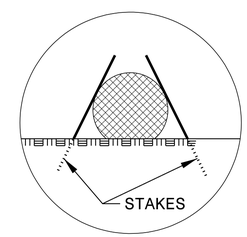

INSET A

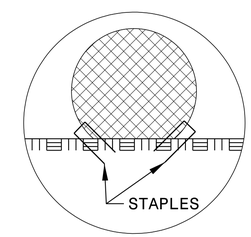

INSET B

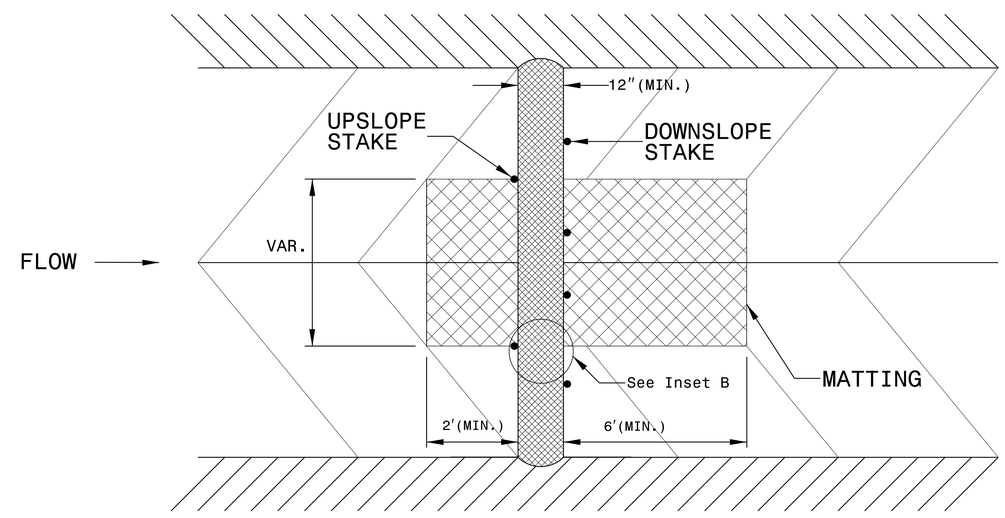

TOP VIEW

PROJECT REFERENCE NO.	SHEET NO.
W-5206AA	EC-03
ROADWAY DESIGN ENGINEER	HYDRAULICS ENGINEER

DIVISION OF HIGHWAYS
STATE OF NORTH CAROLINA

SOIL STABILIZATION TIMEFRAMES

SITE DESCRIPTION	STABILIZATION TIME	TIMEFRAME EXCEPTIONS
PERIMETER DIKES, SWALES, DITCHES AND SLOPES	7 DAYS	NONE
HIGH QUALITY WATER (HQW) ZONES	7 DAYS	NONE
SLOPES STEEPER THAN 3:1	7 DAYS	IF SLOPES ARE 10' OR LESS IN LENGTH AND ARE NOT STEEPER THAN 2:1, 14 DAYS ARE ALLOWED.
SLOPES 3:1 OR FLATTER	14 DAYS	7 DAYS FOR SLOPES GREATER THAN 50' IN LENGTH.
ALL OTHER AREAS WITH SLOPES FLATTER THAN 4:1	14 DAYS	NONE, EXCEPT FOR PERIMETERS AND HQW ZONES.

PROJECT REFERENCE NO.	SHEET NO.
W-5206AA	EC-04/CONST.04
R/W SHEET NO.	
ROADWAY DESIGN ENGINEER	HYDRAULICS ENGINEER

CLEARING AND GRUBBING
EROSION CONTROL FOR
CONSTRUCTION SHEET 04

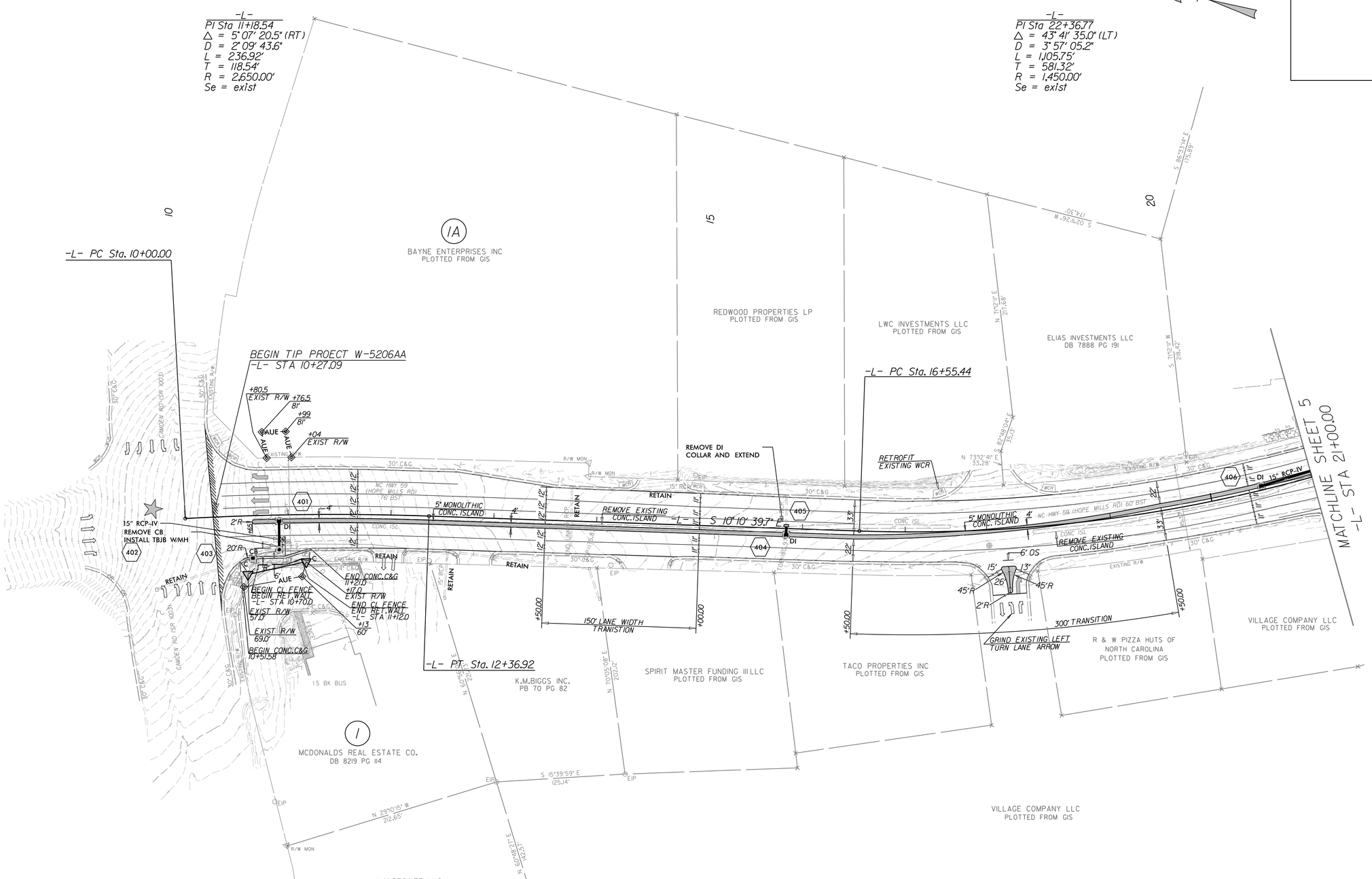

NOTES: ANY DEVIATION FROM OPTIONS GIVEN WILL REQUIRE PRIOR APPROVAL BY ENGINEER.

ADDITIONAL EROSION CONTROL DEVICES MAY NEED TO BE INSTALLED AS DIRECTED BY THE ENGINEER.

NOTE:
PERIMETER EROSION CONTROL MEASURES SHALL BE INSTALLED DURING CLEARING AND GRUBBING PHASE.

NOTE:
PLACE TEMPORARY ROCK SEDIMENT DAMS TYPE – B AND TEMPORARY ROCK SILT CHECKS TYPE – A AT DRAINAGE OUTLETS.

PROJECT REFERENCE NO.	SHEET NO.
W-5206AA	EC-05/CONST.05
R/W SHEET NO.	
ROADWAY DESIGN ENGINEER	HYDRAULICS ENGINEER

CLEARING AND GRUBBING
EROSION CONTROL FOR
CONSTRUCTION SHEET 05

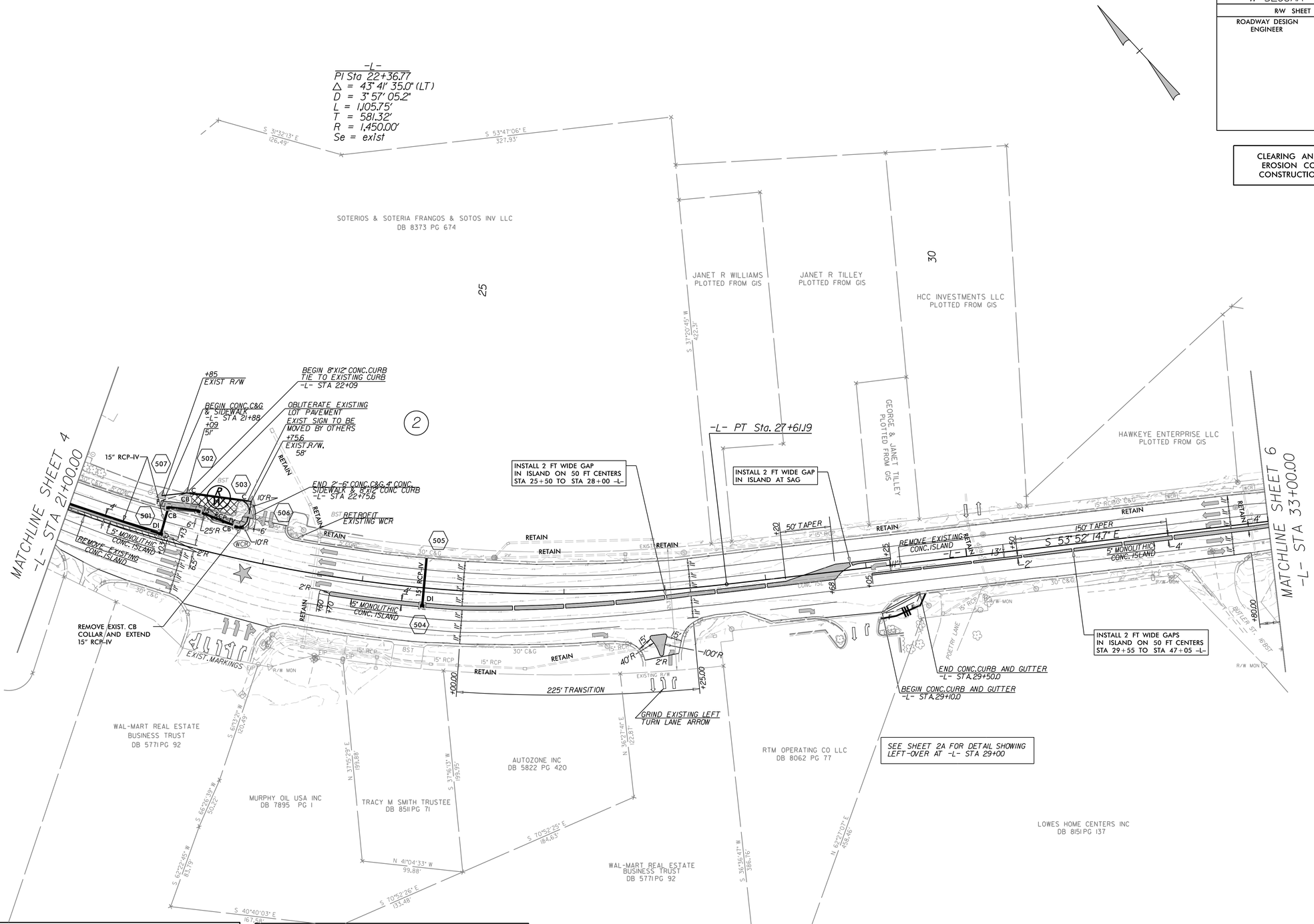

NOTES: ANY DEVIATION FROM OPTIONS GIVEN WILL REQUIRE PRIOR APPROVAL BY ENGINEER.

ADDITIONAL EROSION CONTROL DEVICES MAY NEED TO BE INSTALLED AS DIRECTED BY THE ENGINEER.

NOTE:
PLACE TEMPORARY ROCK SEDIMENT DAMS TYPE – B AND TEMPORARY ROCK SILT CHECKS TYPE – A AT DRAINAGE OUTLETS.

NOTE:
PERIMETER EROSION CONTROL MEASURES SHALL BE INSTALLED DURING CLEARING AND GRUBBING PHASE.

PROJECT REFERENCE NO.	SHEET NO.
W-5206AA	EC-06/CONST.06
R/W SHEET NO.	
ROADWAY DESIGN ENGINEER	HYDRAULICS ENGINEER

CLEARING AND GRUBBING
EROSION CONTROL FOR
CONSTRUCTION SHEET 06

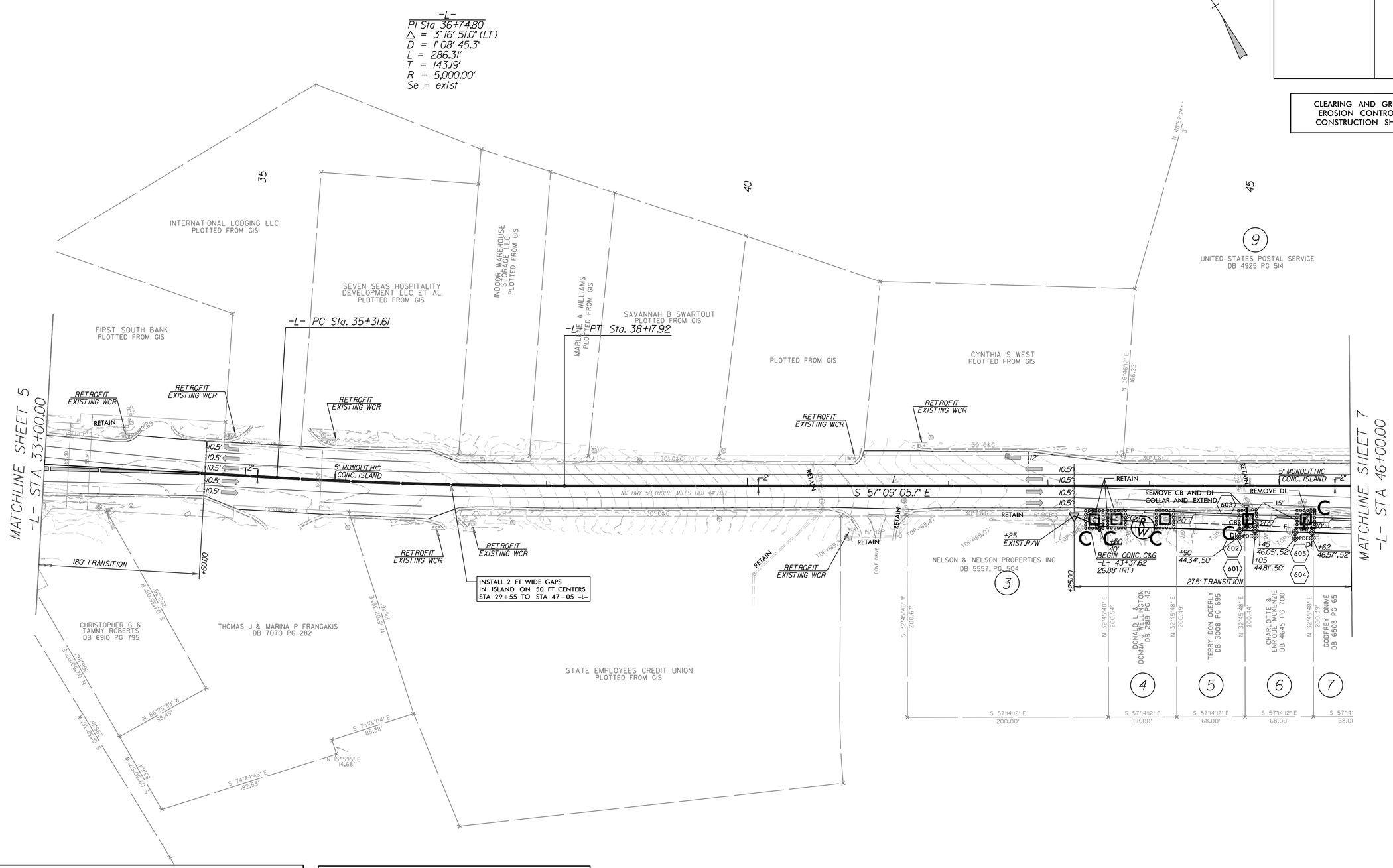

NOTES: ANY DEVIATION FROM OPTIONS GIVEN WILL REQUIRE PRIOR APPROVAL BY ENGINEER.

ADDITIONAL EROSION CONTROL DEVICES MAY NEED TO BE INSTALLED AS DIRECTED BY THE ENGINEER.

NOTE:
PLACE TEMPORARY ROCK SEDIMENT DAMS TYPE – B AND TEMPORARY ROCK SILT CHECKS TYPE – A AT DRAINAGE OUTLETS.

NOTE:
PERIMETER EROSION CONTROL MEASURES SHALL BE INSTALLED DURING CLEARING AND GRUBBING PHASE.

PROJECT REFERENCE NO.	SHEET NO.
W-5206AA	EC-07/CONST.07
R/W SHEET NO.	
ROADWAY DESIGN ENGINEER	HYDRAULICS ENGINEER

CLEARING AND GRUBBING
EROSION CONTROL FOR
CONSTRUCTION SHEET 07

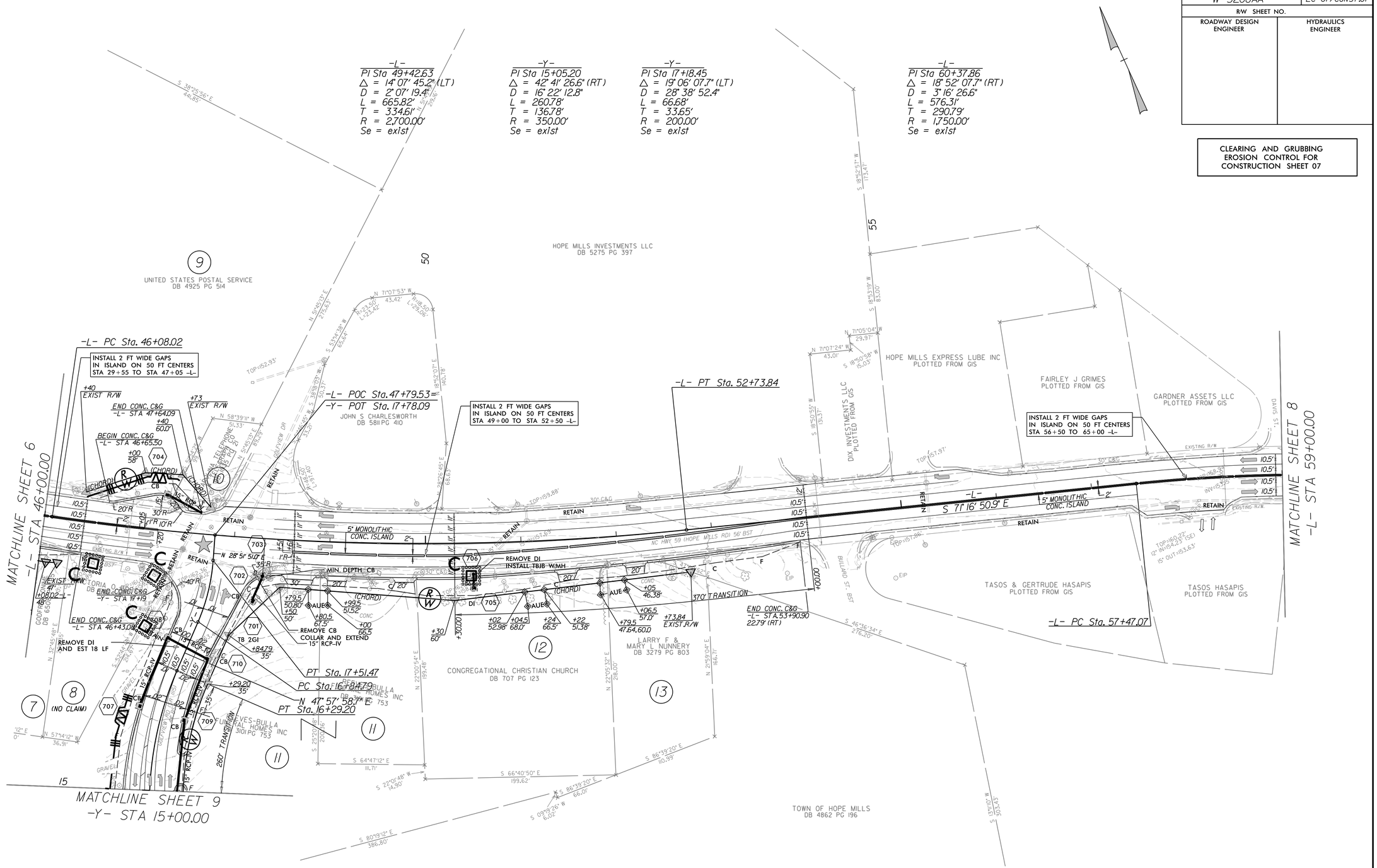

NOTES: ANY DEVIATION FROM OPTIONS GIVEN WILL REQUIRE PRIOR APPROVAL BY ENGINEER.

ADDITIONAL EROSION CONTROL DEVICES MAY NEED TO BE INSTALLED AS DIRECTED BY THE ENGINEER.

NOTE:
PLACE TEMPORARY ROCK SEDIMENT DAMS TYPE – B AND TEMPORARY ROCK SILT CHECKS TYPE – A AT DRAINAGE OUTLETS.

NOTE:
PERIMETER EROSION CONTROL MEASURES SHALL BE INSTALLED DURING CLEARING AND GRUBBING PHASE.

PROJECT REFERENCE NO.	SHEET NO.
W-5206AA	EC-08/CONST.08
R/W SHEET NO.	
ROADWAY DESIGN ENGINEER	HYDRAULICS ENGINEER

CLEARING AND GRUBBING
EROSION CONTROL FOR
CONSTRUCTION SHEET 08

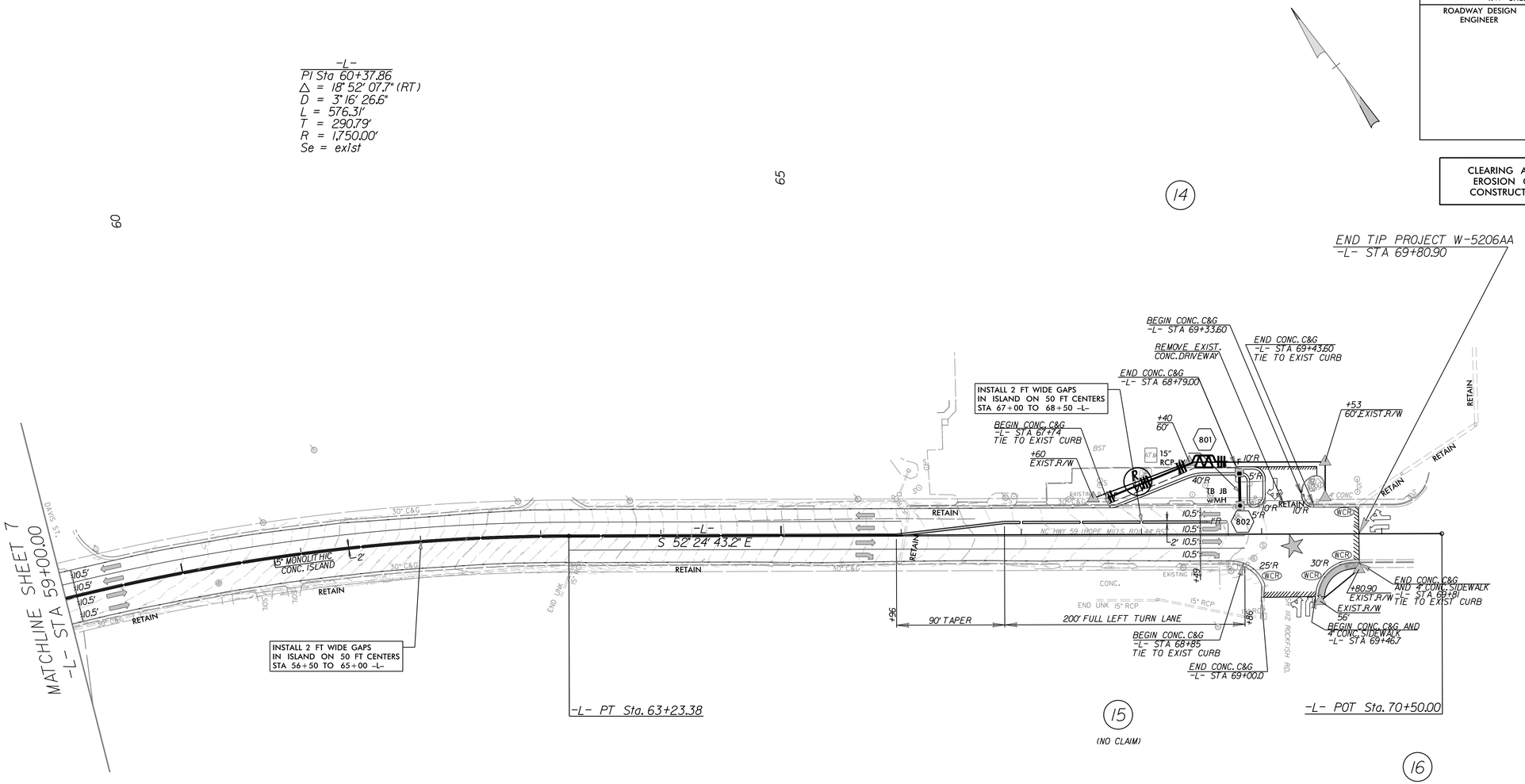

NOTES: ANY DEVIATION FROM OPTIONS GIVEN WILL REQUIRE PRIOR APPROVAL BY ENGINEER.

ADDITIONAL EROSION CONTROL DEVICES MAY NEED TO BE INSTALLED AS DIRECTED BY THE ENGINEER.

NOTE:
PLACE TEMPORARY ROCK SEDIMENT DAMS TYPE – B AND TEMPORARY ROCK SILT CHECKS TYPE – A AT DRAINAGE OUTLETS.

NOTE:
PERIMETER EROSION CONTROL MEASURES SHALL BE INSTALLED DURING CLEARING AND GRUBBING PHASE.

PROJECT REFERENCE NO.	SHEET NO.
W-5206AA	EC-09/CONST.09
R/W SHEET NO.	
ROADWAY DESIGN ENGINEER	HYDRAULICS ENGINEER

CLEARING AND GRUBBING EROSION CONTROL FOR CONSTRUCTION SHEET 09

-Y-
PI Sta 15+05.20
△ = 42° 41' 26.6" (RT)
D = 16° 22' 12.8"
L = 260.78'
T = 136.78'
R = 350.00'
Se = exist

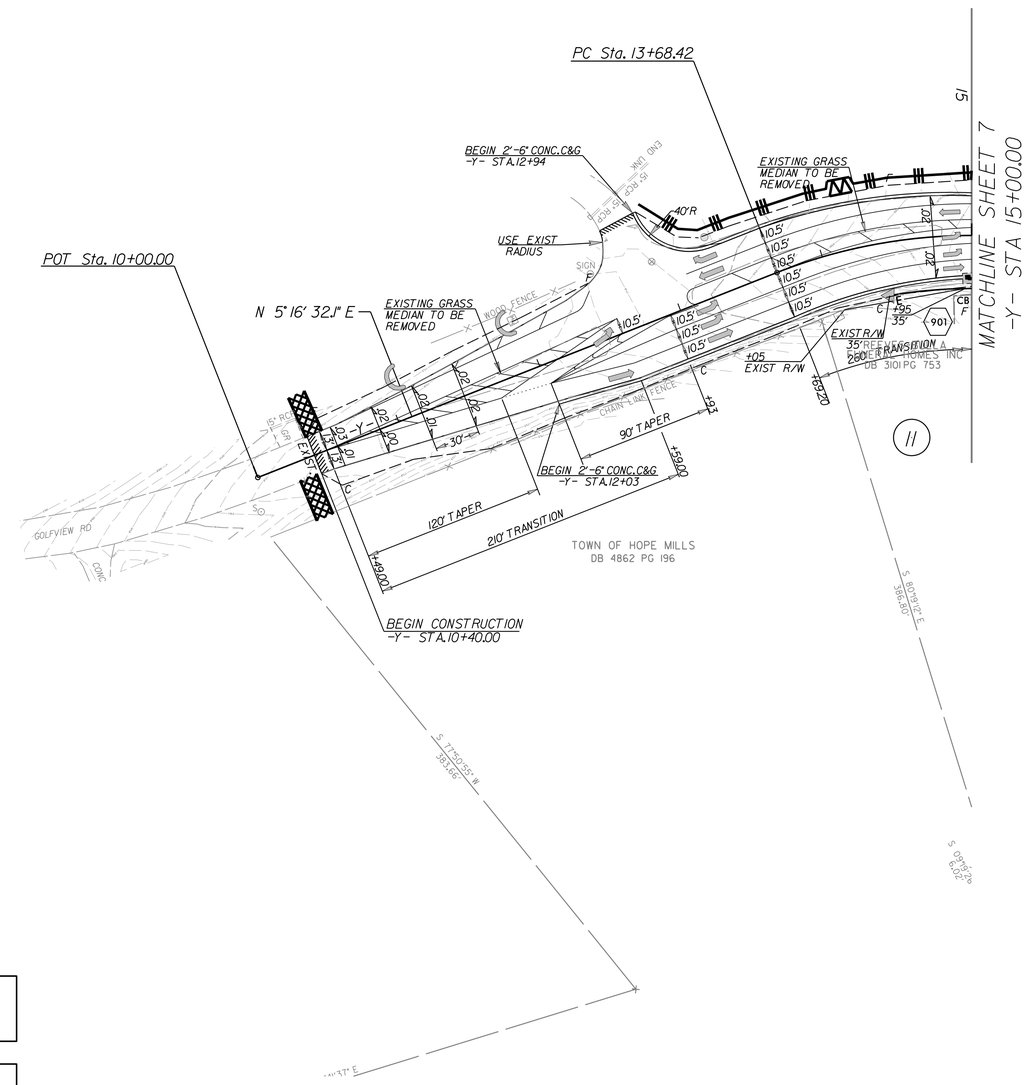

NOTES: ANY DEVIATION FROM OPTIONS GIVEN WILL REQUIRE PRIOR APPROVAL BY ENGINEER.

ADDITIONAL EROSION CONTROL DEVICES MAY NEED TO BE INSTALLED AS DIRECTED BY THE ENGINEER.

NOTE:
PLACE TEMPORARY ROCK SEDIMENT DAMS TYPE – B AND TEMPORARY ROCK SILT CHECKS TYPE – A AT DRAINAGE OUTLETS.

NOTE:
PERIMETER EROSION CONTROL MEASURES SHALL BE INSTALLED DURING CLEARING AND GRUBBING PHASE.

PROJECT REFERENCE NO.	SHEET NO.
W-5206AA	EC-10/CONST.04
R/W SHEET NO.	
ROADWAY DESIGN ENGINEER	HYDRAULICS ENGINEER

FINAL GRADE
EROSION CONTROL FOR
CONSTRUCTION SHEET 04

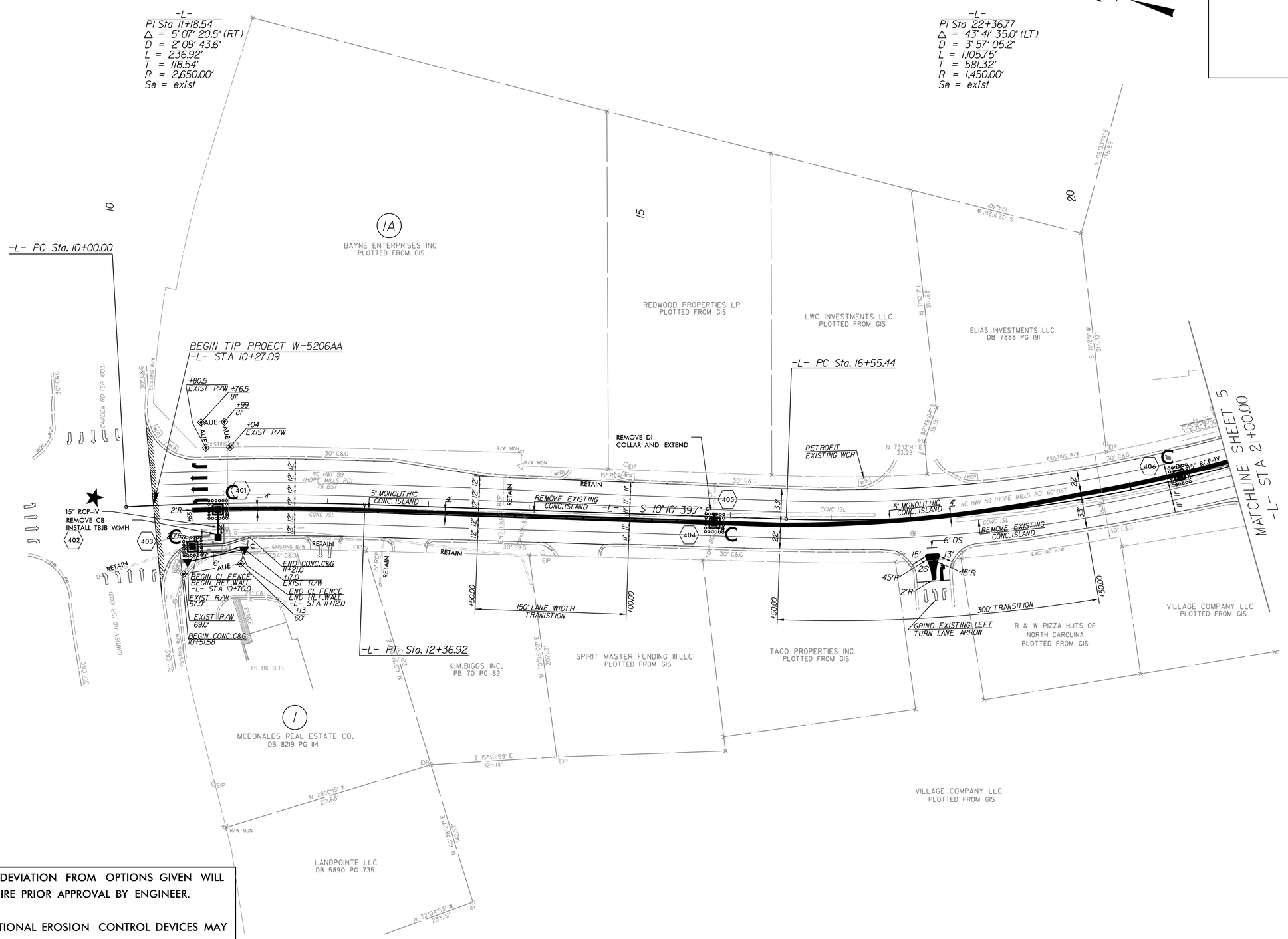

NOTES: ANY DEVIATION FROM OPTIONS GIVEN WILL REQUIRE PRIOR APPROVAL BY ENGINEER.

ADDITIONAL EROSION CONTROL DEVICES MAY NEED TO BE INSTALLED AS DIRECTED BY THE ENGINEER.

PROJECT REFERENCE NO.	SHEET NO.
W-5206AA	EC-11/CONST.05
R/W SHEET NO.	
ROADWAY DESIGN ENGINEER	HYDRAULICS ENGINEER

FINAL GRADE
EROSION CONTROL FOR
CONSTRUCTION SHEET 05

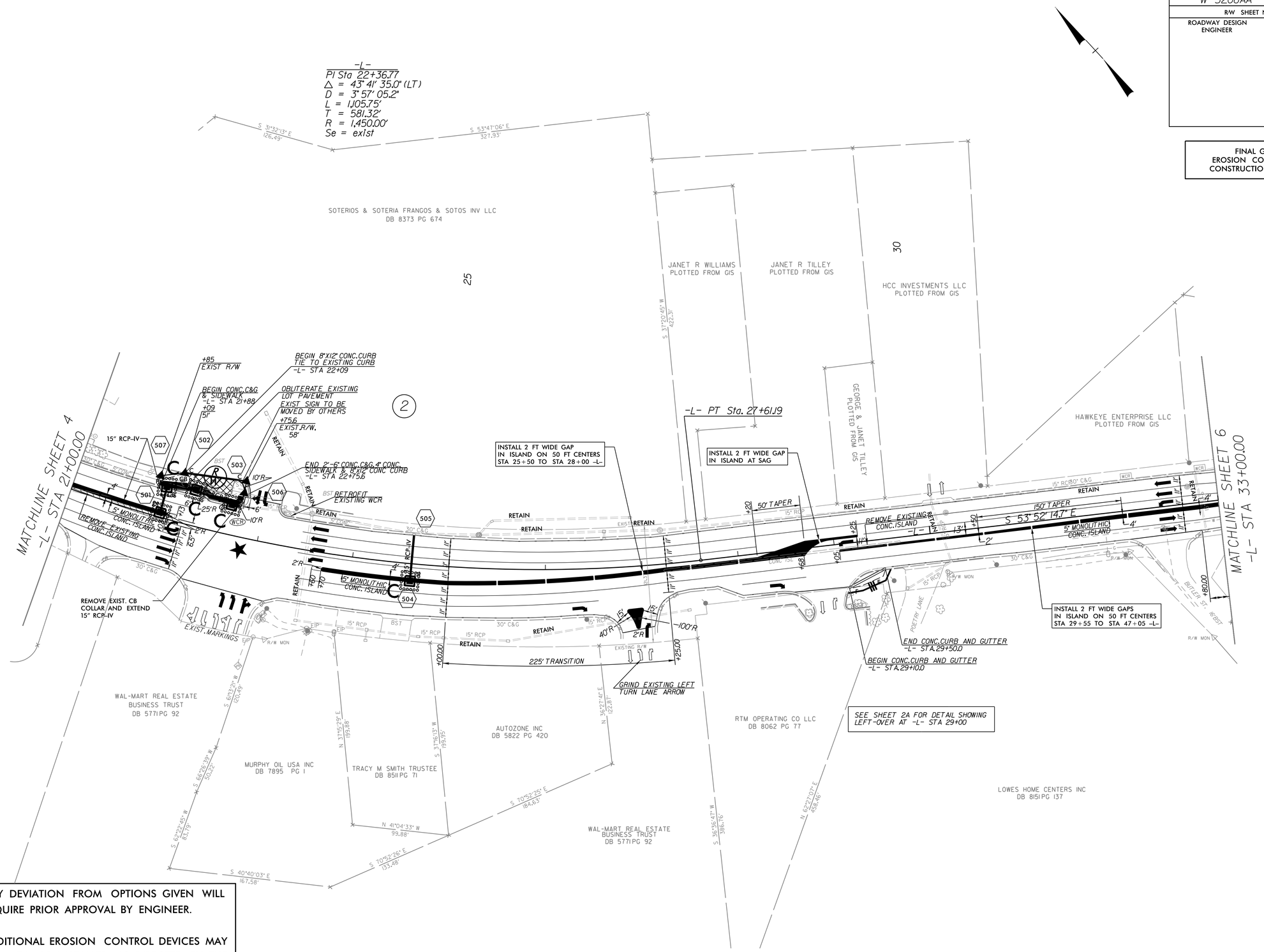

NOTES: ANY DEVIATION FROM OPTIONS GIVEN WILL REQUIRE PRIOR APPROVAL BY ENGINEER.

ADDITIONAL EROSION CONTROL DEVICES MAY NEED TO BE INSTALLED AS DIRECTED BY THE ENGINEER.

PROJECT REFERENCE NO.	SHEET NO.
W-5206AA	EC-12/CONST.06
R/W SHEET NO.	
ROADWAY DESIGN ENGINEER	HYDRAULICS ENGINEER

FINAL GRADE
EROSION CONTROL FOR
CONSTRUCTION SHEET 06

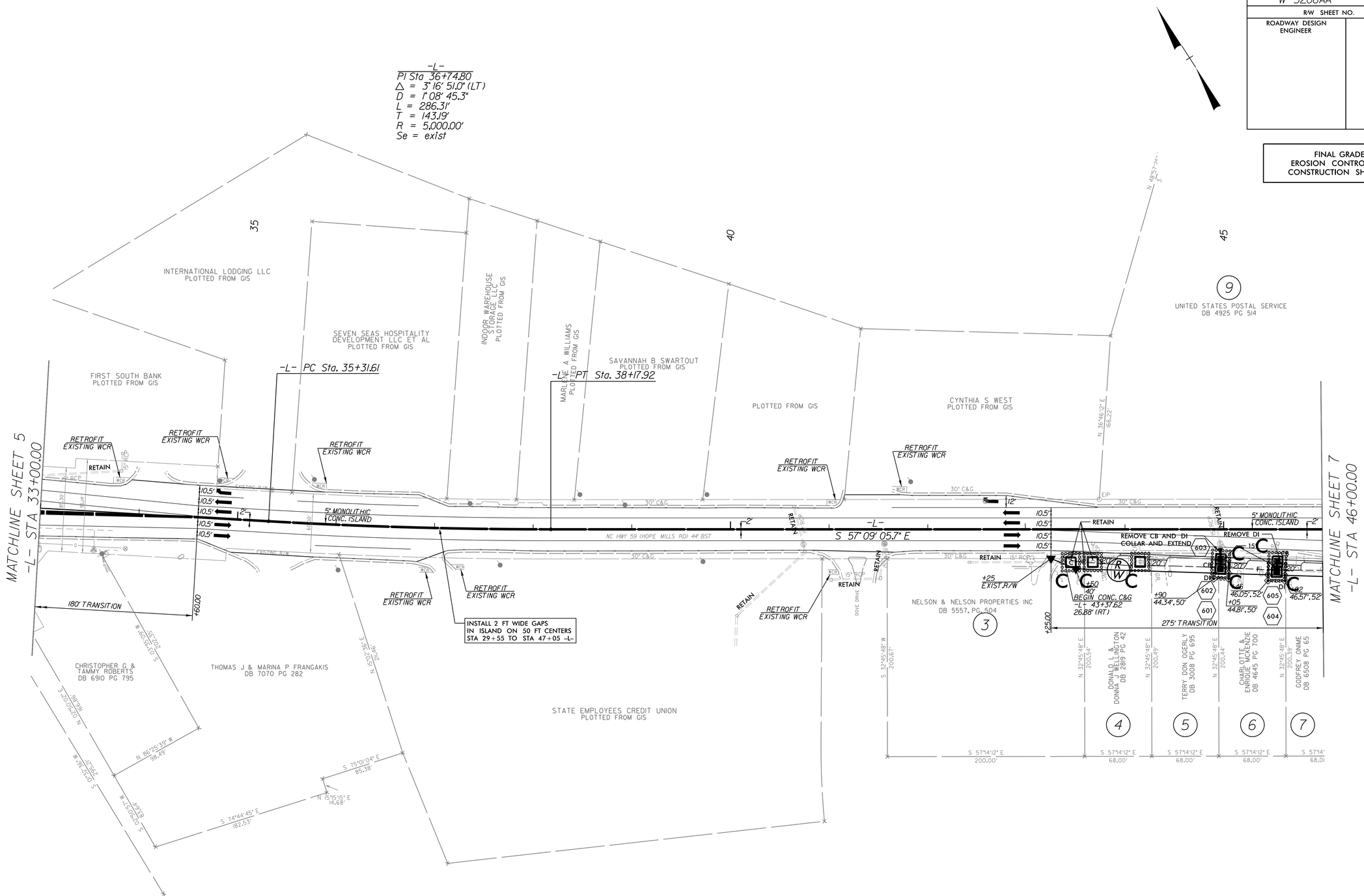

NOTES: ANY DEVIATION FROM OPTIONS GIVEN WILL REQUIRE PRIOR APPROVAL BY ENGINEER.

ADDITIONAL EROSION CONTROL DEVICES MAY NEED TO BE INSTALLED AS DIRECTED BY THE ENGINEER.

PROJECT REFERENCE NO.	SHEET NO.
W-5206AA	EC-13/CONST.07
R/W SHEET NO.	
ROADWAY DESIGN ENGINEER	HYDRAULICS ENGINEER

CLEARING AND GRUBBING
EROSION CONTROL FOR
CONSTRUCTION SHEET 07

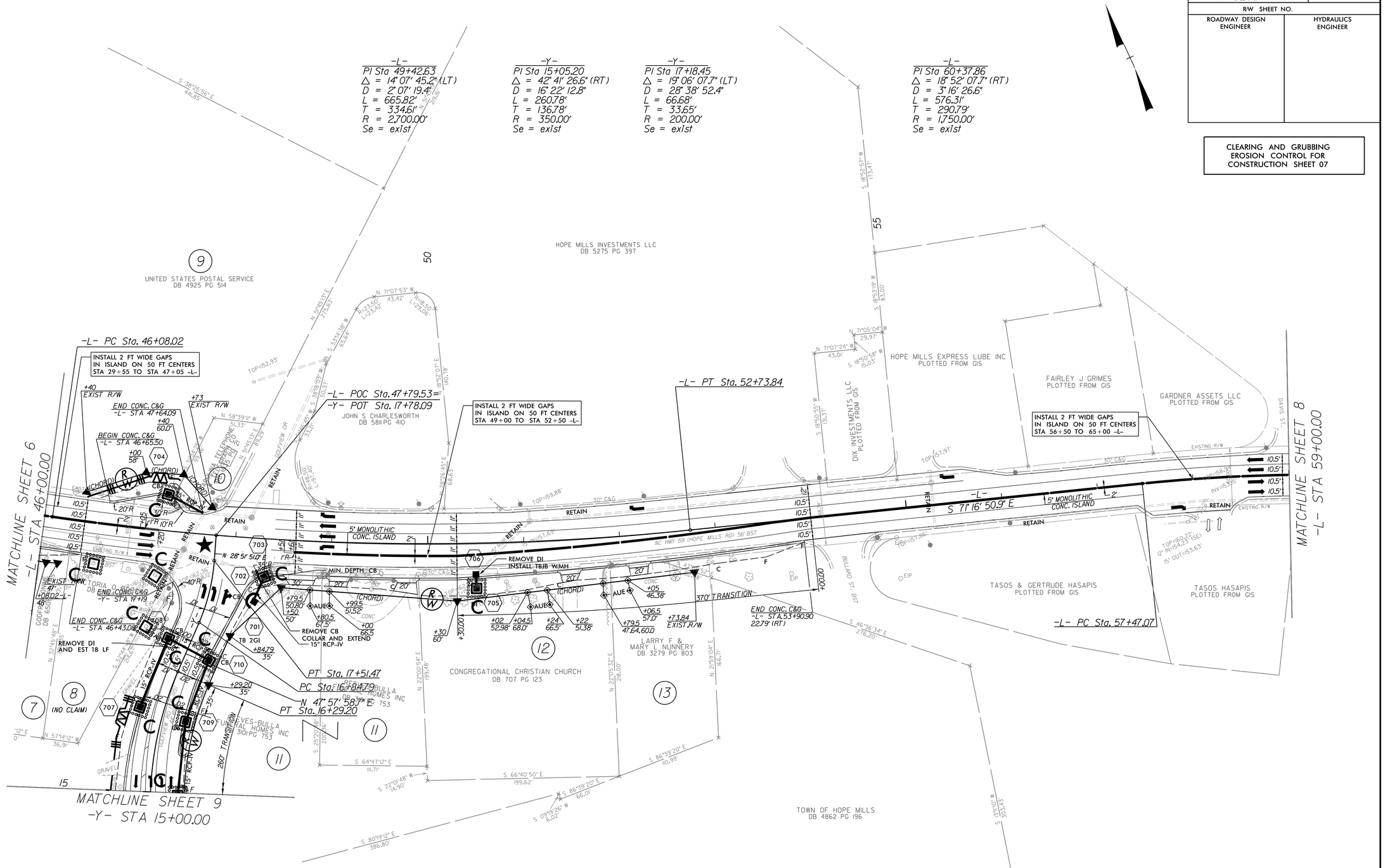

NOTES: ANY DEVIATION FROM OPTIONS GIVEN WILL REQUIRE PRIOR APPROVAL BY ENGINEER.

ADDITIONAL EROSION CONTROL DEVICES MAY NEED TO BE INSTALLED AS DIRECTED BY THE ENGINEER.

PROJECT REFERENCE NO.	SHEET NO.
W-5206AA	EC-14/CONST.08
R/W SHEET NO.	
ROADWAY DESIGN ENGINEER	HYDRAULICS ENGINEER

FINAL GRADE
EROSION CONTROL FOR
CONSTRUCTION SHEET 08

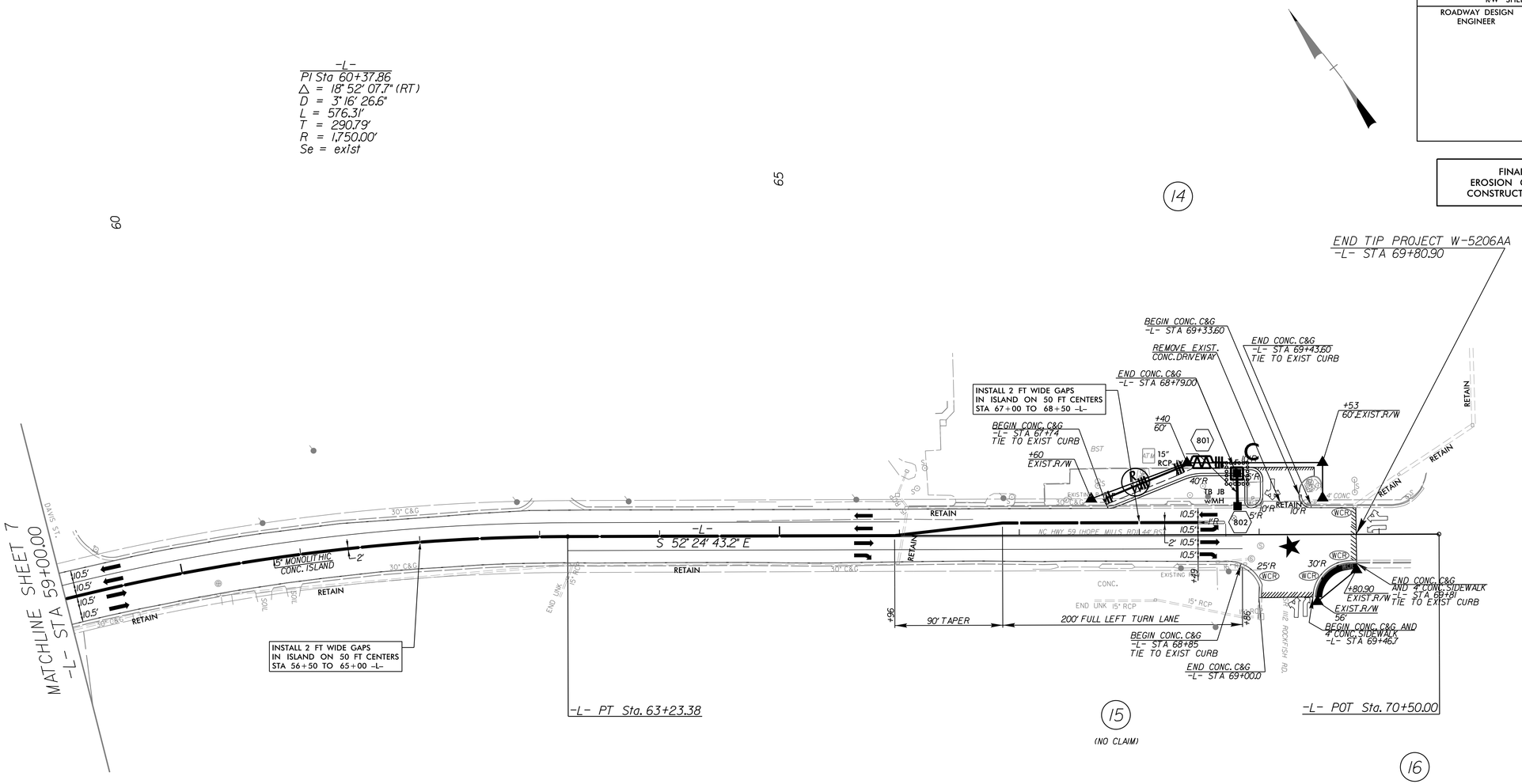

NOTES: ANY DEVIATION FROM OPTIONS GIVEN WILL REQUIRE PRIOR APPROVAL BY ENGINEER.

ADDITIONAL EROSION CONTROL DEVICES MAY NEED TO BE INSTALLED AS DIRECTED BY THE ENGINEER.

PROJECT REFERENCE NO.	SHEET NO.
W-5206AA	EC-15/CONST.09
R/W SHEET NO.	
ROADWAY DESIGN ENGINEER	HYDRAULICS ENGINEER

FINAL GRADE
EROSION CONTROL FOR
CONSTRUCTION SHEET 09

-Y-
PI Sta 15+05.20
△ = 42° 41' 26.6" (RT)
D = 16° 22' 12.8"
L = 260.78'
T = 136.78'
R = 350.00'
Se = exist

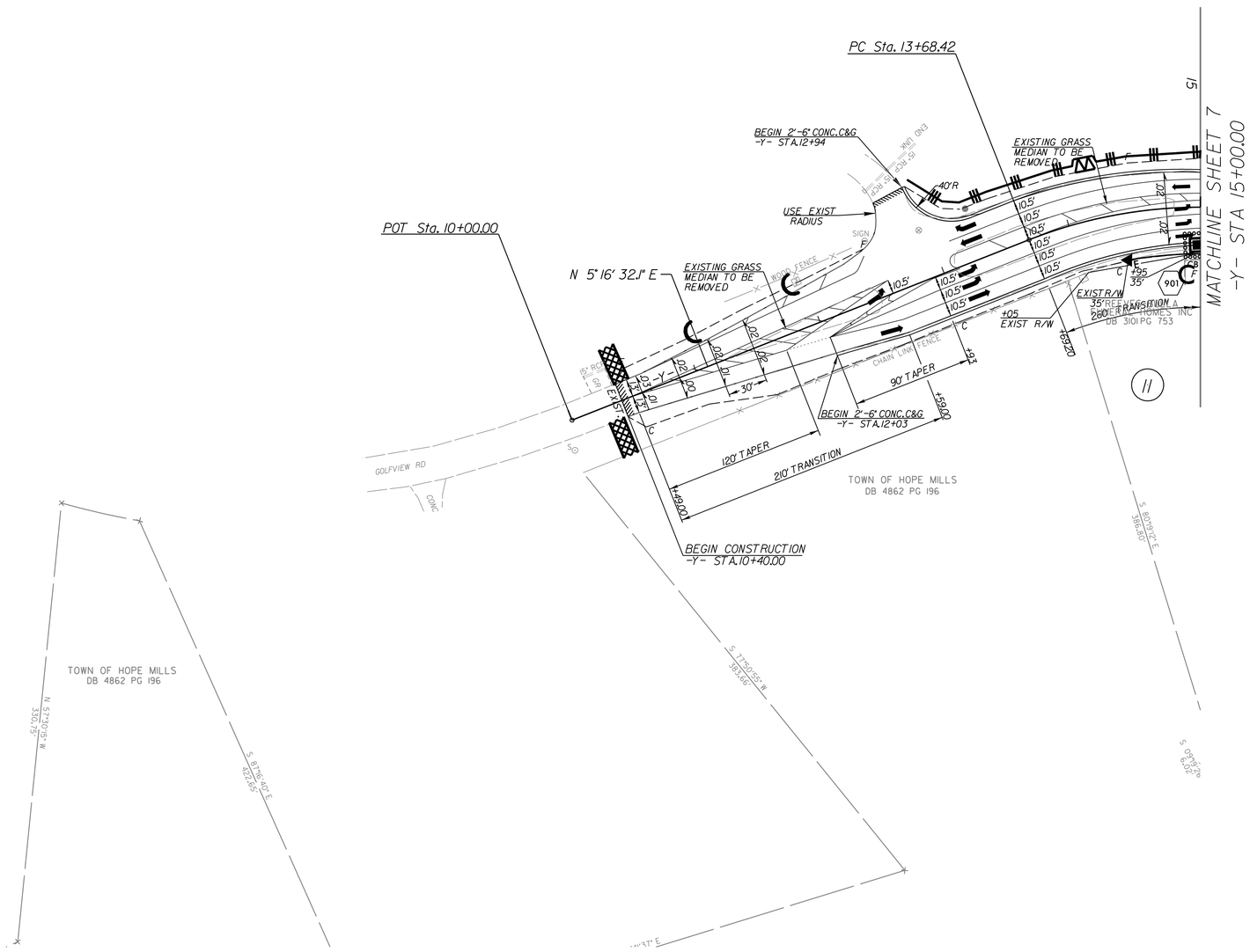

NOTES: ANY DEVIATION FROM OPTIONS GIVEN WILL REQUIRE PRIOR APPROVAL BY ENGINEER.

ADDITIONAL EROSION CONTROL DEVICES MAY NEED TO BE INSTALLED AS DIRECTED BY THE ENGINEER.

PROJECT REFERENCE NO.	SHEET NO.
W-5206AA	SIGN-1

APPROVED: A. Matthew Thigpen

Digitally signed by A. Matthew Thigpen
DN: c=US, o=Raleigh, NC, email=MThigpen@VHB.com, o=Vanasse Hangen Brustlin Inc., cn=A. Matthew Thigpen
Date: 2015.03.03 15:26:08 -05'00'

DATE:

SEAL

NORTH CAROLINA PROFESSIONAL SEAL 034343 ENGINEER MATTHEW THIGPEN

STATE OF NORTH CAROLINA
DEPARTMENT OF TRANSPORTATION

SIGNING PLAN
CUMBERLAND COUNTY

LOCATION: NC 59 (MAIN STREET) FROM SR 1003 (CAMDEN ROAD) TO SR 1112 (ROCKFISH ROAD)

ROADWAY STANDARD DRAWING

THE FOLLOWING ROADWAY STANDARDS AS APPEAR IN "ROADWAY STANDARD DRAWINGS" - PROJECT SERVICES UNIT - N.C. DEPARTMENT OF TRANSPORTATION - RALEIGH, N.C., DATED JANUARY 2012 ARE APPLICABLE TO THIS PROJECT AND BY REFERENCE HEREBY ARE CONSIDERED A PART OF THESE PLANS:

STD. NO.	TITLE
901.50	ARROWS AND SHIELDS
904.10	ORIENTATION OF GROUND MOUNTED SIGNS
904.50	MOUNTING OF TYPE 'D', 'E' AND 'F' SIGNS ON 'U' CHANNEL POSTS

PROJECT NOTES

1. DISPOSAL OF SIGN SYSTEM, U CHANNEL
2. SIGN ERECTION, RELOCATED, TYPE "D" SIGN
3. SIGN ERECTION, RELOCATED, TYPE "E" SIGN
4. DISPOSAL OF SUPPORT, U CHANNEL
5. DISPOSAL OF SIGN, E

GENERAL NOTES

. SIGNS FURNISHED BY STATE.
. ALL TYPE 'D' SIGNS SHALL BE MOUNTED ON TWO U-CHANNEL POSTS UNLESS OTHERWISE INDICATED ON THE PLANS.
. IF REMOVAL OR RELOCATION OF SIGNS ON PRIVATE STREET (NON-STATE MAINTAINED) IS REQUIRED DUE TO CONSTRUCTION, THE CONTRACTOR SHALL INFORM THE ENGINEER. THE WORK WILL BE COMPLETED BY OTHERS.
. SIGNING PLANS DO NOT INCLUDE TEMPORARY CONSTRUCTION SIGNING OR PAVEMENT MARKINGS. SEE TRAFFIC CONTROL PLANS.
. WHEN NOT STATIONED OR DIMENSIONED ON PLANS, ALL 'E' AND 'F' SIGNS SHALL BE FIELD LOCATED BY THE ENGINEER.
. WHEN EXISTING SIGNS ARE REMOVED AND INSTALLED ON NEW SUPPORTS, THE RE-ERECTION SHALL IMMEDIATELY FOLLOW THE REMOVAL.
. THE BACKGROUND FOR TYPE E & F SIGNS SHALL BE TYPE C REFLECTIVE SHEETING.
. PLACE AN 8" BLOCK OUT TO THE GROUND AT ALL PROPOSED SIGN LOCATIONS IN CONCRETE MEDIANS.

SUMMARY OF QUANTITIES

ITEM NO. DESC. NO.	ITEM NO. SECT. NO.	ITEM DESCRIPTION	QUANTITY	UNIT
4072000000	903	SUPPORTS, 3 LB STEEL U-CHANNEL	745	L.F.
4102000000	904	SIGN ERECTION, TYPE E	42	EA.
4108000000	904	SIGN ERECTION, TYPE F	3	EA.
4116100000	904	SIGN ERECTION, RELOCATE SIGN TYPE D	1	EA.
4116100000	904	SIGN ERECTION, RELOCATE SIGN TYPE E	4	EA.
4155000000	907	DISPOSAL OF SIGN SYSTEM, U-CHANNEL	21	EA.
4192000000	907	DISPOSAL OF SUPPORT, U-CHANNEL	4	EA.
4238000000	907	DISPOSAL OF SIGN, E	2	EA.

INDEX

SHEET NO.	DESCRIPTION
SIGN-1	TITLE SHEET
SIGN-2	E AND F SHEET
SIGN-3-8	SIGNING PLAN SHEETS

PLAN PREPARED BY: VHB Engineering NC, P.C.

A. Matthew Thigpen, PE PROJECT ENGINEER

vhb 4000 WestChase Boulevard Suite 530 Raleigh, NC 27607 NC License No. C-3705

CONTRACT: 45336.1.27 T.I.P.: W-5206AA

3/3/2015 3:16:26 pm J:\Raleigh\38286.01 NCDOT W-5206AA NC 59\cad\te\W-5206AA\Traffic\Signing\CADD\Signing Layout Plans\W5206AA_tc_sign_01.dgn
User: mthigpen

PROJECT REFERENCE NO.	SHEET NO.
W-5206AA	SIGN-2

APPROVED: A. Matthew Thigpen

Digitally signed by A. Matthew Thigpen
DN: c=US, o=Raleigh, NC, email=MThigpen@hdr.com, o=Wanesse Hangen Brustlin Inc., cn=A. Matthew Thigpen
Date: 2015.03.03 15:27:59 -05'00'

DATE:

SEAL

NORTH CAROLINA PROFESSIONAL SEAL 034343 ENGINEER A. MATTHEW THIGPEN

403 QUANTITY REQ'D 10

54 X 18
R6-1

TWO "U" POSTS PER SIGN

404 QUANTITY REQ'D 5

30 X 36
R2-1

ONE "U" POST PER SIGN

405 QUANTITY REQ'D 6

36 X 36
R5-1

ONE "U" POST PER SIGN

406 QUANTITY REQ'D 5

30 X 30
R1-1

MOUNT BELOW SIGN 407
IN 5 INSTALLATIONS

407 QUANTITY REQ'D 5

36 X 12
R6-1

ONE "U" POST PER SIGN

408 QUANTITY REQ'D 1

24 X 30
R2-1

ONE "U" POST PER SIGN

409 QUANTITY REQ'D 1

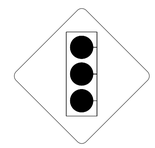

30 X 30
W3-3

ONE "U" POST PER SIGN

410 QUANTITY REQ'D 1

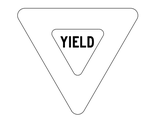

36 X 36 X 36
R1-2

ONE "U" POST PER SIGN

411 QUANTITY REQ'D 1

12 X 18
R7-300

ONE "U" POST PER SIGN

412 QUANTITY REQ'D 1

36 X 36
R3-7R

ONE "U" POST PER SIGN

414 QUANTITY REQ'D 3

24 X 30
R4-7

ONE "U" POST PER SIGN

415 QUANTITY REQ'D 3

18 X 18
OM1-3

MOUNT BELOW SIGN 414
IN 3 INSTALLATIONS

501

2 - 24" X 12"

2 - 24" X 24"

ONE "U" POST PER SIGN

502

1 - 24" X 12"

1 - 24" X 24"

ONE "U" POST PER SIGN

TYPE "E" AND "F" SIGNS

3/3/2015
J:\Geopro\Raleigh\38286.01 NCDOT W-5206AA NC 59\cad\te\W-5206AA\Traffic\Signing\CADD\Signing Layout Plans\W5206AA_tc_sign_02.dgn
User:mthigpen

PROJECT REFERENCE NO.	SHEET NO.
W-5206AA	SIGN-3

APPROVED: A. Matthew Thigpen

Digitally signed by A. Matthew Thigpen
DN: c=US, o=Raleigh, NC, email=MThigpen@rk-b.com, o=Vanasse Hangen Brustlin Inc., cn=A. Matthew Thigpen
Date: 2015.03.03 15:29:58 -05'00'

DATE:

SEAL

NORTH CAROLINA PROFESSIONAL SEAL 034343 ENGINEER A. MATTHEW THIGPEN

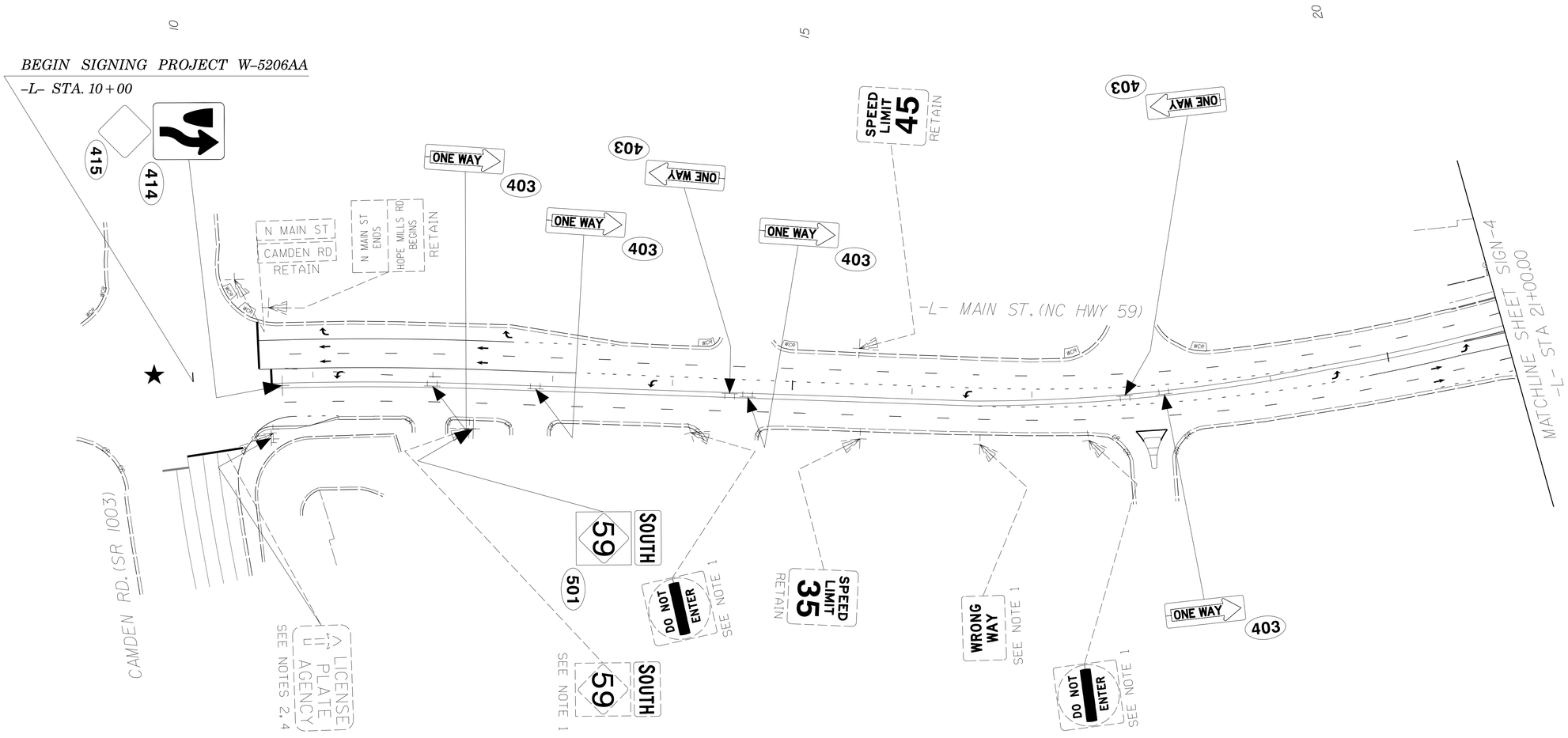

PROJECT NOTES

1. DISPOSAL OF SIGN SYSTEM, U CHANNEL
2. SIGN ERECTION, RELOCATED, TYPE "D" SIGN
3. SIGN ERECTION, RELOCATED, TYPE "E" SIGN
4. DISPOSAL OF SUPPORT, U CHANNEL
5. DISPOSAL OF SIGN, E

SIGNING PLAN SHEET

3/3/2015
3:36:09 PM
Raleigh\38286.01 NCDOT W-5206AA NC 59\cad\te\W-5206AA\Traffic\Signing\CADD\Signing Layout Plans\W5206AA_tc_sign_03.dgn
User:mthigpen

PROJECT REFERENCE NO.	SHEET NO.
W-5206AA	SIGN-4

APPROVED: A. Matthew Thigpen

Digitally signed by A. Matthew Thigpen
DN: c=US, o=Raleigh, NC, email=MThigpen@hdr.com, o=Vanasse Hangen Brustlin Inc., cn=A. Matthew Thigpen
Date: 2015.03.03 15:31:56 -05'00'

DATE:

SEAL

NORTH CAROLINA PROFESSIONAL SEAL 034343 ENGINEER A. MATTHEW THIGPEN

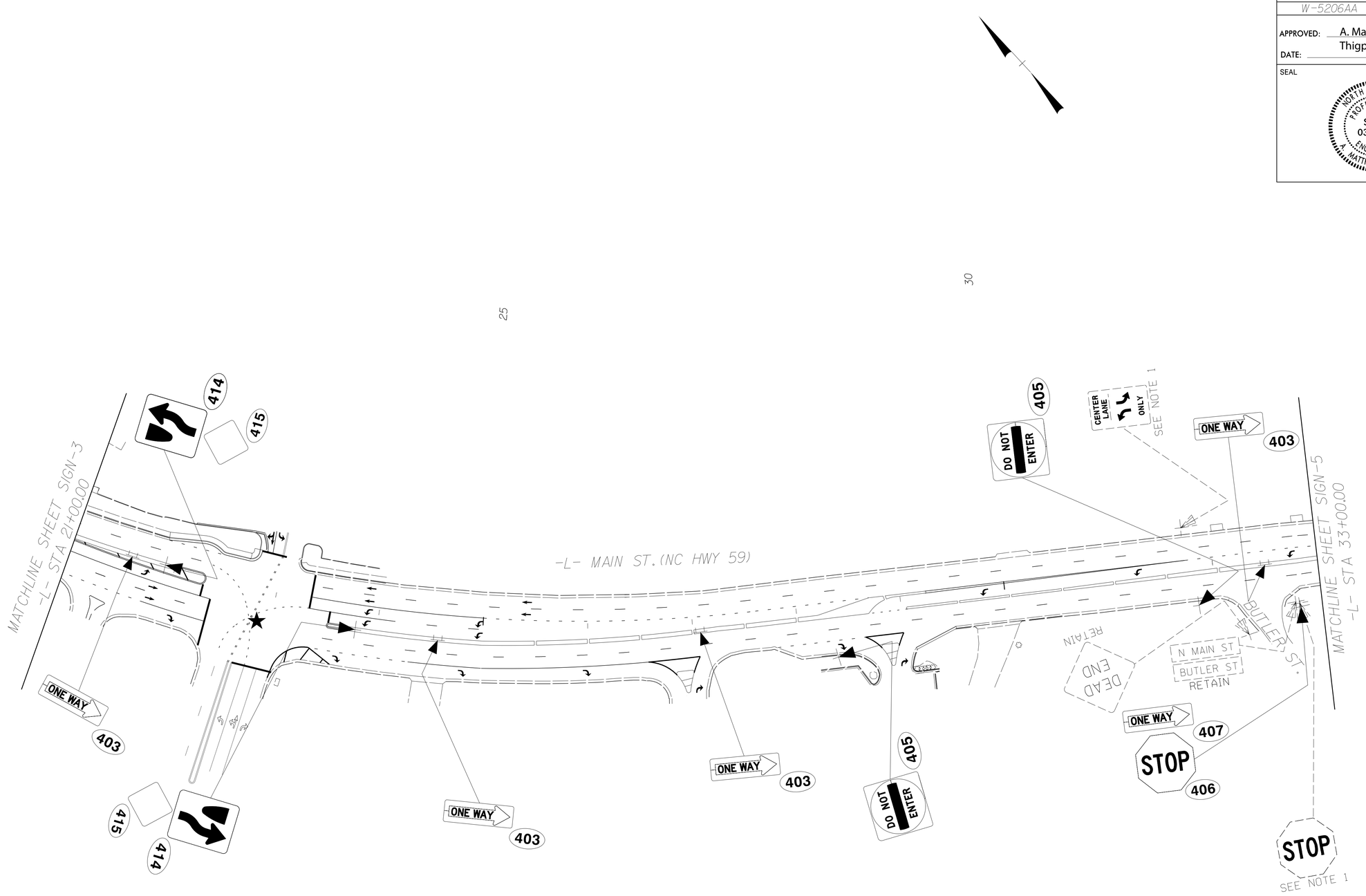

★ SIGNALIZED

PROJECT NOTES

1. DISPOSAL OF SIGN SYSTEM, U CHANNEL
2. SIGN ERECTION, RELOCATED, TYPE "D" SIGN
3. SIGN ERECTION, RELOCATED, TYPE "E" SIGN
4. DISPOSAL OF SUPPORT, U CHANNEL
5. DISPOSAL OF SIGN, E

SIGNING PLAN SHEET

3/3/2015
3:46:07 pm
\\hdr.com\Raleigh\38286.01 NCDOT W-5206AA NC 59\cad\te\W-5206AA\Traffic\Signing\CADD\Signing Layout Plans\W5206AA_tc_sign_04.dgn
User:mthigpen

PROJECT REFERENCE NO.	SHEET NO.
W-5206AA	SIGN-5

APPROVED: A. Matthew Thigpen

Digitally signed by A. Matthew Thigpen
DN: c=US, o=Raleigh, NC, email=a4thigpen@yahoo.com, o=Vanasse Hangen Brustlin Inc., cn=A. Matthew Thigpen
Date: 2015.03.03 15:34:00 -05'00'

DATE:

SEAL

NORTH CAROLINA PROFESSIONAL SEAL 034343 ENGINEER A. MATTHEW THIGPEN

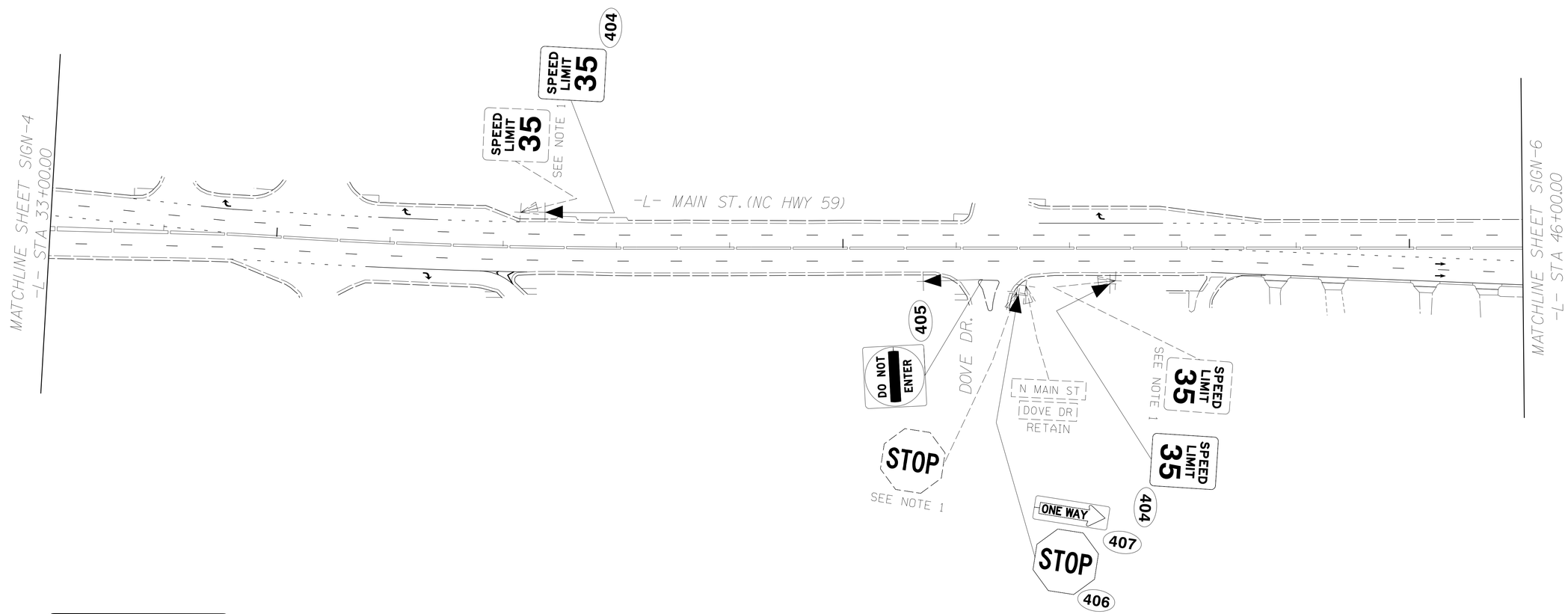

PROJECT NOTES

1. DISPOSAL OF SIGN SYSTEM, U CHANNEL
2. SIGN ERECTION, RELOCATED, TYPE "D" SIGN
3. SIGN ERECTION, RELOCATED, TYPE "E" SIGN
4. DISPOSAL OF SUPPORT, U CHANNEL
5. DISPOSAL OF SIGN, E

SIGNING PLAN SHEET

3/3/2015
3:46:07 pm
J:\Proj\Raleigh\38286.01 NCDOT W-5206AA NC 59\cad\te\W-5206AA\Traffic\Signing\CADD\Signing Layout Plans\W5206AA_tc_sign_05.dgn
User:mthigpen

PROJECT REFERENCE NO.	SHEET NO.
W-5206AA	SIGN-6

APPROVED: A. Matthew Thigpen

Digitally signed by A. Matthew Thigpen
DN: c=US, o=Raleigh, NC, email=MThigpen@vhb.com, o=Vanasse Hangen Brustlin Inc., cn=A. Matthew Thigpen
Date: 2015.03.03 15:36:02 -05'00'

DATE:

SEAL

NORTH CAROLINA PROFESSIONAL SEAL 034343 ENGINEER A. MATTHEW THIGPEN

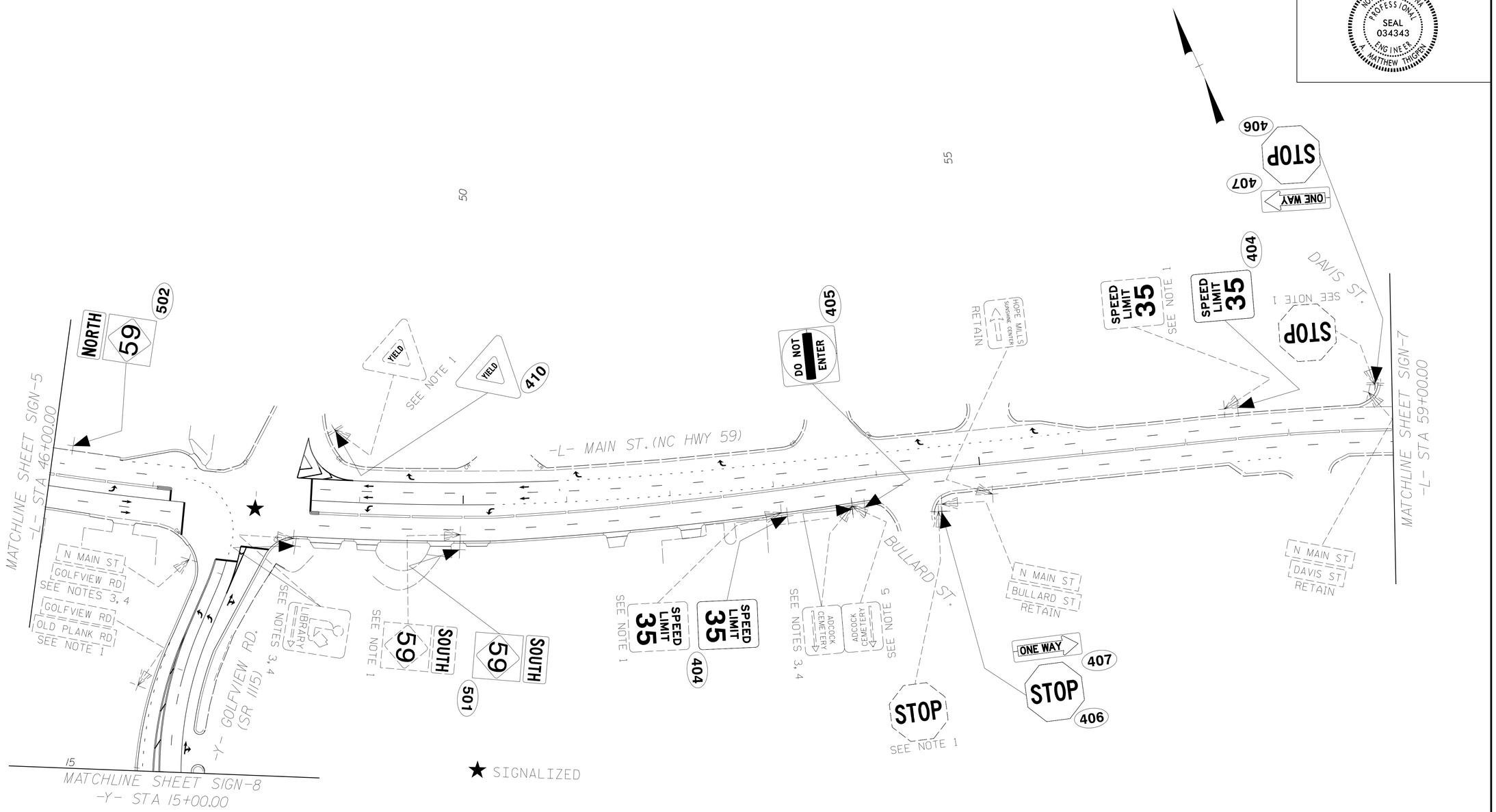

PROJECT NOTES

1. DISPOSAL OF SIGN SYSTEM, U CHANNEL
2. SIGN ERECTION, RELOCATED, TYPE "D" SIGN
3. SIGN ERECTION, RELOCATED, TYPE "E" SIGN
4. DISPOSAL OF SUPPORT, U CHANNEL
5. DISPOSAL OF SIGN, E

SIGNING PLAN SHEET

3/3/2015
3:16:57 pm
User: mthigpen
V:\Projects\Raleigh\38286.01 NCDOT W-5206AA NC 59\cad\te\W-5206AA\Traffic\Signing\CADD\Signing Layout Plans\W5206AA_tc_sign_06.dgn

PROJECT REFERENCE NO.	SHEET NO.
W-5206AA	SIGN-7

APPROVED: A. Matthew Thigpen

DATE:

Digitally signed by A. Matthew Thigpen
DN: c=US, o=Raleigh, NC, email=MThigpen@rkhb.com, o=Vanasse Hangen Brustlin Inc., cn=A. Matthew Thigpen
Date: 2015.03.03 15:38:07 -05'00'

SEAL

NORTH CAROLINA PROFESSIONAL SEAL 034343 ENGINEER A. MATTHEW THIGPEN

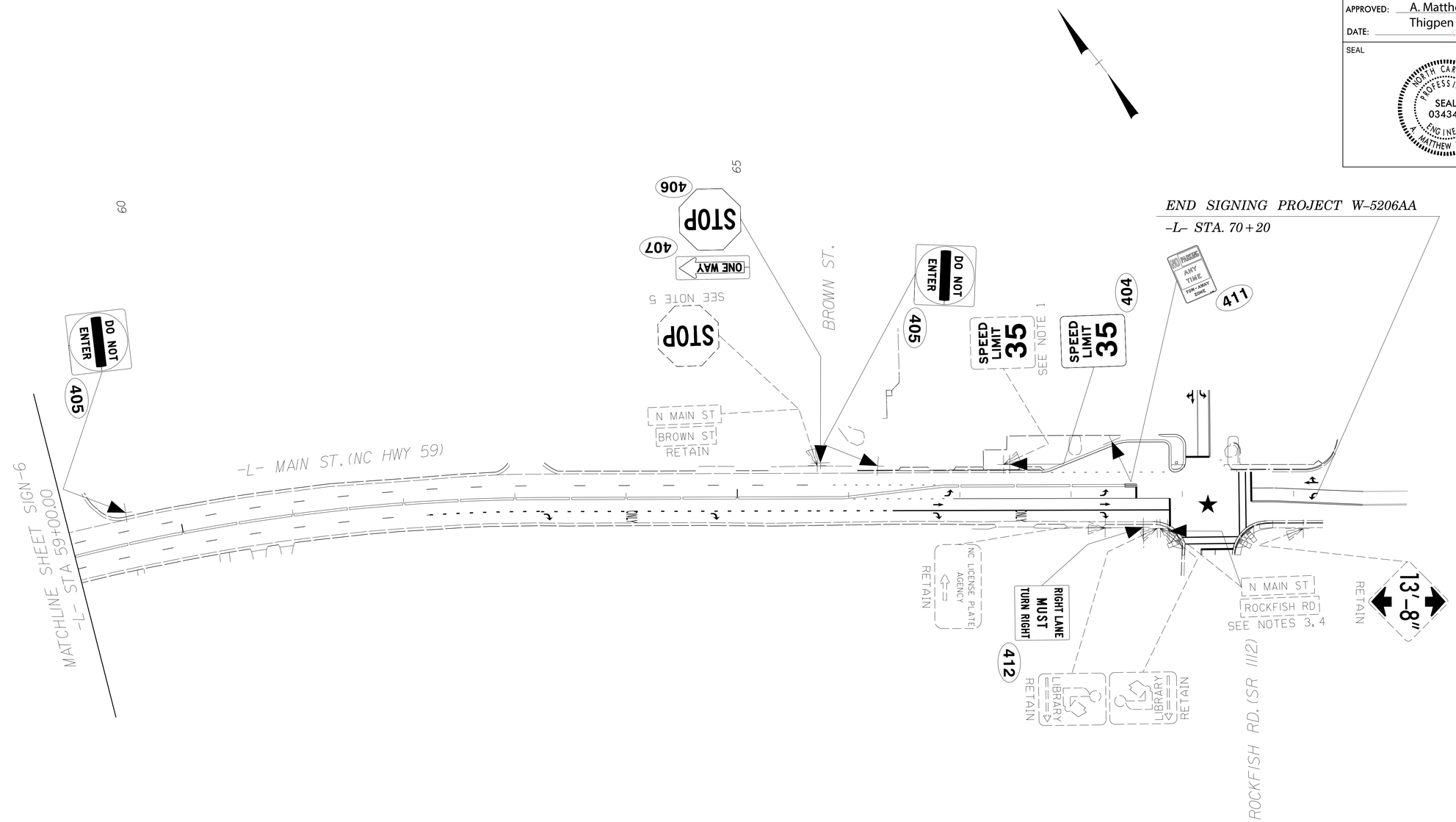

★ SIGNALIZED

PROJECT NOTES

1. DISPOSAL OF SIGN SYSTEM, U CHANNEL
2. SIGN ERECTION, RELOCATED, TYPE "D" SIGN
3. SIGN ERECTION, RELOCATED, TYPE "E" SIGN
4. DISPOSAL OF SUPPORT, U CHANNEL
5. DISPOSAL OF SIGN, E

SIGNING PLAN SHEET

3/3/2015
1:46:05 pm
Project: J:\Raleigh\38286.01 NCDOT W-5206AA NC 59\cad\te\W-5206AA\Traffic\Signing\CADD\Signing Layout Plans\W5206AA_tc_sign_07.dgn
User: mthigpen

PROJECT REFERENCE NO.	SHEET NO.
W-5206AA	SIGN-8

APPROVED: A. Matthew Thigpen

Digitally signed by A. Matthew Thigpen
DN: c=US, o=Raleigh, NC, email=matthew@mjinfo.com, o=Vanasse Hangen Brustlin Inc., cn=A. Matthew Thigpen
Date: 2015.03.03 15:40:16 -05'00'

DATE:

SEAL

NORTH CAROLINA PROFESSIONAL SEAL 034343 ENGINEER A. MATTHEW THIGPEN

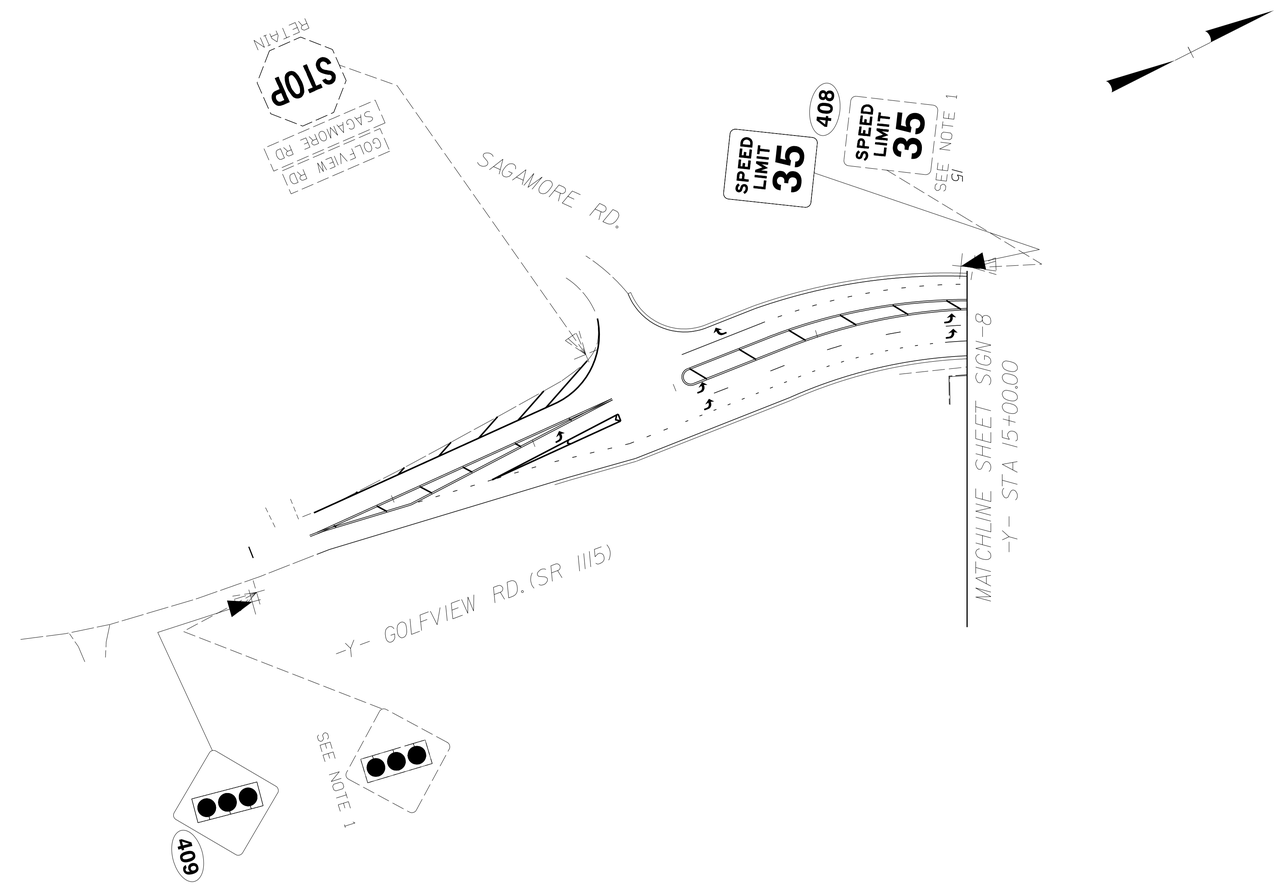

PROJECT NOTES

1. DISPOSAL OF SIGN SYSTEM, U CHANNEL
2. SIGN ERECTION, RELOCATED, TYPE "D" SIGN
3. SIGN ERECTION, RELOCATED, TYPE "E" SIGN
4. DISPOSAL OF SUPPORT, U CHANNEL
5. DISPOSAL OF SIGN, E

SIGNING PLAN SHEET

3/3/2015
\\66\pw_o\Raleigh\38286.01 NCDOT W-5206AA NC 59\cad\te\W-5206AA\Traffic\Signing\CADD\Signing Layout Plans\W5206AA_tc_sign_08.dgn
Usertmthigpen

PROJECT REFERENCE NO.	SHEET NO.
W-5206AA	Sig.1.0

PHASING DIAGRAM

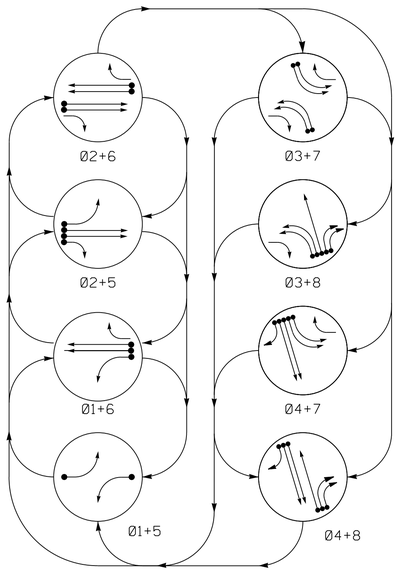

PHASING DIAGRAM DETECTION LEGEND

- DETECTED MOVEMENT
- UNDETECTED MOVEMENT (OVERLAP)
- UNSIGNALIZED MOVEMENT
- PEDESTRIAN MOVEMENT

TABLE OF OPERATION

SIGNAL FACE	PHASE 01+5	01+6	02+5	02+6	03+7	03+8	04+7	04+8	FLASH
11	←	←	~~R~~	~~R~~	~~R~~	~~R~~	~~R~~	~~R~~	~~R~~
21	R	R	G	G	R	R	R	R	Y
22	R	R	G	G	R↘	R↘	R	R	Y
31,32	~~R~~	~~R~~	~~R~~	~~R~~	←	←	~~R~~	~~R~~	~~R~~
41,42	R	R	R	R	R	R	G	G	R
44	R	R	R	R	R	R	→	→	R
51	←	~~R~~	←	~~R~~	~~R~~	~~R~~	~~R~~	~~R~~	~~R~~
61	R	G	R	G	R	R	R	R	Y
62	R	G	R	G	R↘	R	R↘	R	Y
71,72	~~R~~	~~R~~	~~R~~	~~R~~	←	~~R~~	←	~~R~~	~~R~~
81,82	R	R	R	R	R	G	R	G	R
83,84	R	R	R	R	R	→	R	→	R

SIGNAL FACE I.D.

All Heads L.E.D.

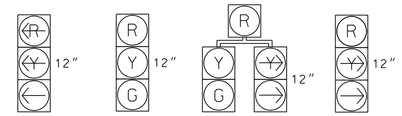

11, 31,32, 51, 71,72 — 21, 41,42, 61, 81,82 — 22, 62 — 44, 83,84

OASIS 2070 LOOP & DETECTOR INSTALLATION CHART

INDUCTIVE LOOPS					DETECTOR PROGRAMMING							
LOOP	SIZE (FT)	DISTANCE FROM STOPBAR (FT)	TURNS	NEW LOOP	PHASE	CALLING	EXTENSION	FULL TIME DELAY	STRETCH TIME	DELAY TIME	SYSTEM LOOP	NEW CARD
1A	6X60	0	2-4-2	-	1	Y	Y	-	-	-	-	-
2A/S11	6X6	300	5	Y	2	Y	Y	-	-	-	Y	-
2B/S12	6X6	300	5	Y	2	Y	Y	-	-	-	Y	-
3A	6X60	0	2-4-2	-	3	Y	Y	-	-	-	-	-
3B	6X60	0	2-4-2	-	3	Y	Y	-	-	-	-	-
4A	6X40	0	2-4-2	Y	4	Y	Y	-	-	-	-	-
4B	6X40	0	2-4-2	Y	4	Y	Y	-	-	-	-	-
4C	6X40	0	2-4-2	Y	4	Y	Y	-	-	25	-	-
5A	6X40	0	2-4-2	Y	5	Y	Y	-	-	-	-	-
6A/S13	6X6	300	5	-	6	Y	Y	-	-	-	Y	-
6B/S14	6X6	300	5	-	6	Y	Y	-	-	-	Y	-
6C,6D	6X6	90	4	-	6	ABANDON & DISCONNECT						
7A	6X40	0	2-4-2	Y	7	Y	Y	-	-	-	-	-
7B	6X40	0	2-4-2	Y	7	Y	Y	-	-	-	-	-
8A	6X60	0	2-4-2	-	8	Y	Y	-	-	-	-	-
8B	6X60	0	2-4-2	-	8	Y	Y	-	-	25	-	-
8C	6X60	0	2-4-2	-	8	Y	Y	-	-	25	-	-
S11	6X6	+200	4	-	-	ABANDON & DISCONNECT						
S12	6X6	+200	4	-	-	ABANDON & DISCONNECT						
S13	6X6	+200	4	-	-	ABANDON & DISCONNECT						
S14	6X6	+200	4	-	-	ABANDON & DISCONNECT						

8 Phase
Fully Actuated
(NC 59 (Hope Mills Rd)/NC 162 (Hope Mills Byp) CLS

NOTES

1. Refer to "Roadway Standard Drawings NCDOT" dated January 2012 and "Standard Specifications for Roads and Structures" dated January 2012.
2. Do not program signal for late night flashing operation unless otherwise directed by the Engineer.
3. Phase 1 and/or phase 5 may be lagged.
4. Phase 3 and/or phase 7 may be lagged.
5. Set all detector units to presence mode.
6. In the event of loop replacement, refer to the current ITS and Signals Design Manual and submit a Plan of Record to the Signal Design Section.
7. Maximum times shown in timing chart are for free-run operation only. Coordinated signal system timing values supersede these values.
8. Closed loop system data: Controller Asset #0357.

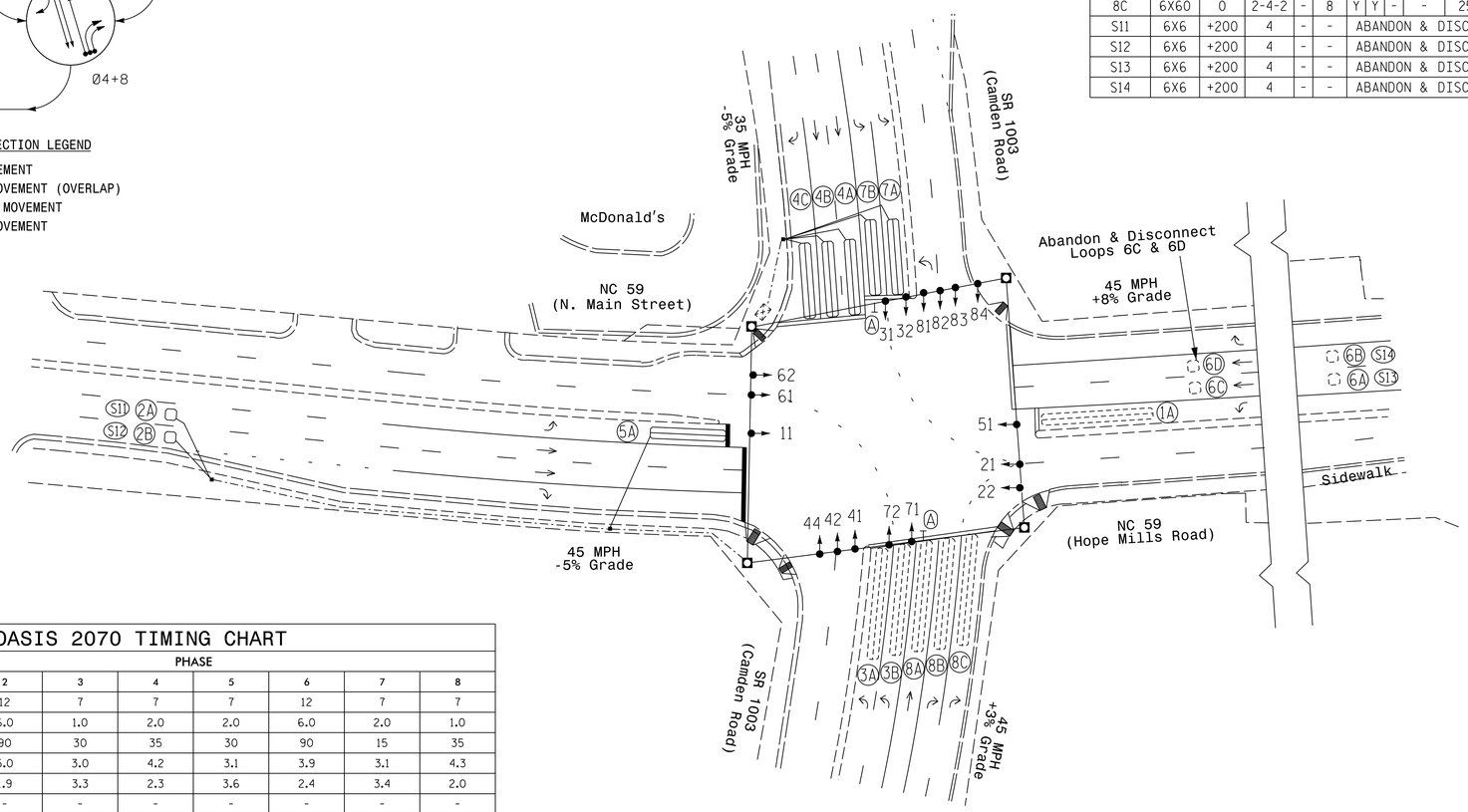

LEGEND

PROPOSED		EXISTING
	Traffic Signal Head	
	Modified Signal Head	N/A
	Sign	
	Pedestrian Signal Head With Push Button & Sign	
	Signal Pole with Guy	
	Signal Pole with Sidewalk Guy	
	Metal Strain Pole	
	Inductive Loop Detector	
	Controller & Cabinet	
	Junction Box	
	2-in Underground Conduit	
N/A	Right of Way	
	Directional Arrow	
	Pavement Marking Arrow	
N/A	Wheelchair Ramp	
	"U-TURN YIELD TO RIGHT TURN" Sign (R10-16)	
	Stop Bar	

OASIS 2070 TIMING CHART

FEATURE	PHASE 1	2	3	4	5	6	7	8
Min Green 1 *	7	12	7	7	7	12	7	7
Extension 1 *	1.0	6.0	1.0	2.0	2.0	6.0	2.0	1.0
Max Green 1 *	30	90	30	35	30	90	15	35
Yellow Clearance	3.0	5.0	3.0	4.2	3.1	3.9	3.1	4.3
Red Clearance	3.3	1.9	3.3	2.3	3.6	2.4	3.4	2.0
Walk 1 *	-	-	-	-	-	-	-	-
Don't Walk 1	-	-	-	-	-	-	-	-
Seconds Per Actuation *	-	1.5	-	-	-	1.5	-	-
Max Variable Initial *	-	34	-	-	-	34	-	-
Time Before Reduction *	-	15	-	-	-	15	-	-
Time To Reduce *	-	30	-	-	-	30	-	-
Minimum Gap	-	3.0	-	-	-	3.0	-	-
Recall Mode	-	MIN RECALL	-	-	-	MIN RECALL	-	-
Vehicle Call Memory	-	YELLOW	-	-	-	YELLOW	-	-
Dual Entry	-	-	-	-	-	-	-	-
Simultaneous Gap	ON	ON	ON	ON	ON	ON	ON	ON

* These values may be field adjusted. Do not adjust Min Green and Extension times for phases 2 and 6 lower than what is shown. Min Green for all other phases should not be lower than 4 seconds.

vhb
Engineers | Scientists | Planners | Designers
4000 WestChase Boulevard, Suite 530 Raleigh, NC 27607
NC License No. C-3705

Signal Upgrade

Prepared for the Offices of:
Transportation Mobility and Safety Division
Signal Design Section
750 N.Greenfield Pkwy,Garner,NC 27529

SCALE 0 40 1"=40'

NC 59 (N. Main St/Hope Mills Rd) at SR 1003 (Camden Road)

Division 6 Cumberland County Hope Mills

PLAN DATE:	Oct 2014	REVIEWED BY:	J.L. Lewis
PREPARED BY:	D.J. Darity	VHB PROJECT NO.:	38286.01

REVISIONS	INIT.	DATE

SEAL
NORTH CAROLINA PROFESSIONAL SEAL 19713 ENGINEER DONALD J. DARITY

DocuSigned by: Don Darity C80D150DC9834FE...
1/12/2015
DATE

SIG. INVENTORY NO. 06-0357

EDI MODEL 2010ECL CONFLICT MONITOR PROGRAMMING DETAIL

(remove jumpers and set switches as shown)

WD ENABLE

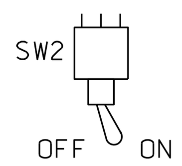

REMOVE DIODE JUMPERS 1-5, 1-6, 2-5, 2-6, 3-7, 3-8, 4-7 and 4-8.

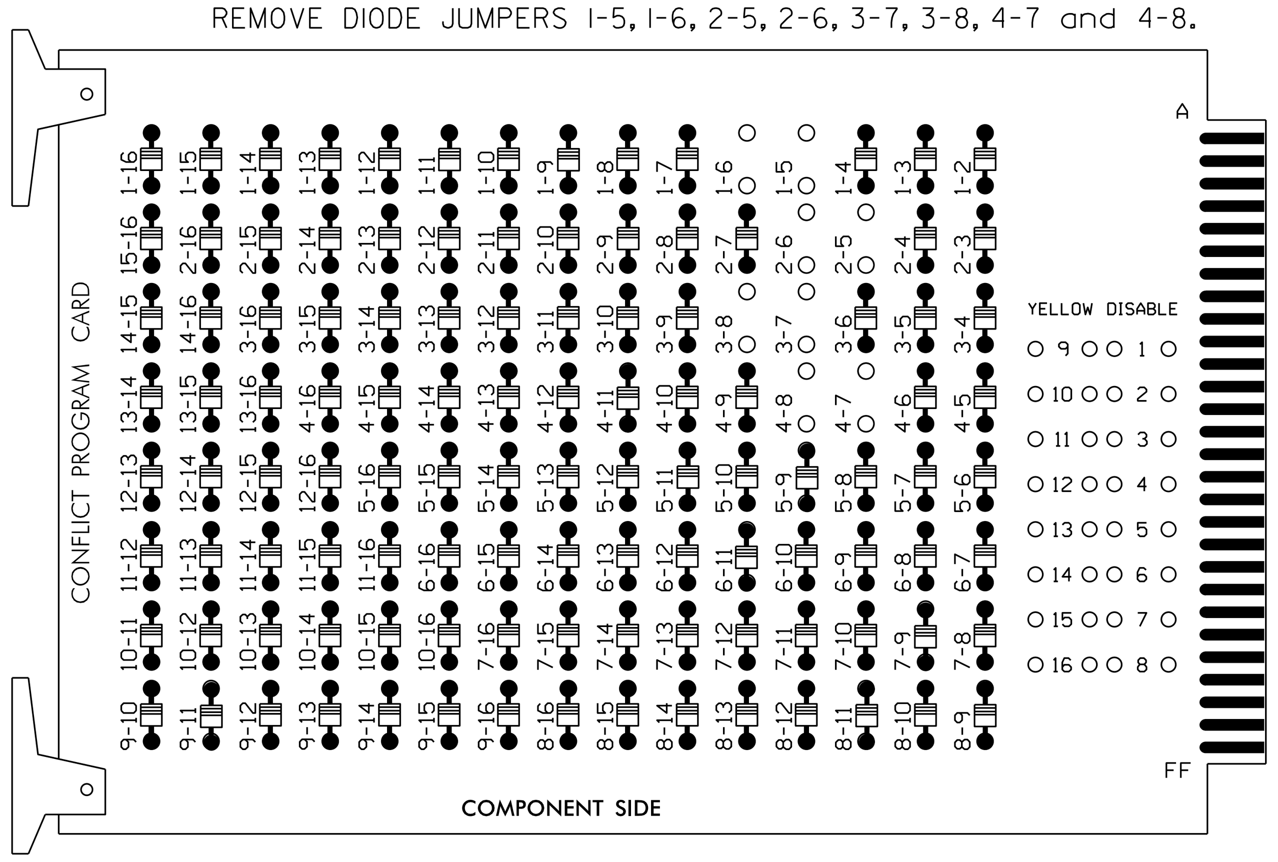

OPTIONS

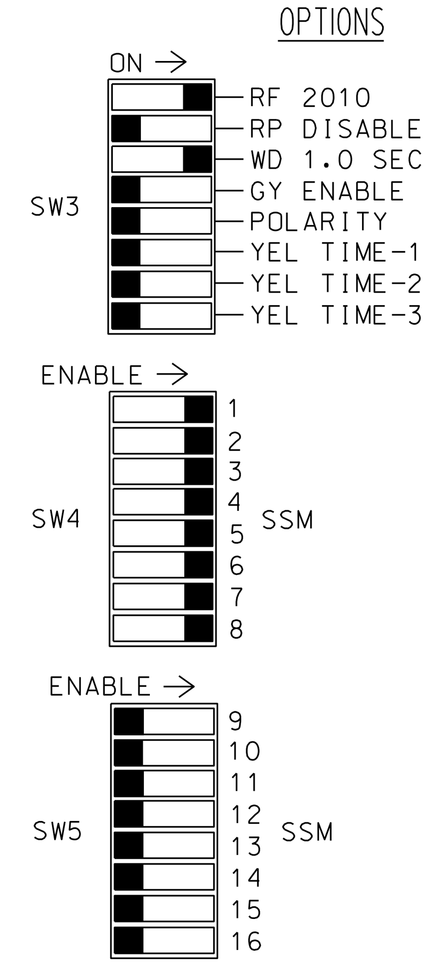

REMOVE JUMPERS AS SHOWN

■ = DENOTES POSITION OF SWITCH

NOTES:

1. Card is provided with all diode jumpers in place. Removal of any jumper allows its channels to run concurrently.
2. Make sure jumpers SEL2-SEL5 are present on the monitor board.

NOTES

1. To prevent "flash-conflict" problems, insert red flash program blocks for all unused vehicle load switches in the output file. The installer shall verify that signal heads flash in accordance with the Signal Plans.
2. Ensure that Red Enable is active at all times during normal operation. To prevent Red Failures on unused monitor channels, tie unused red monitor inputs 9,10 11,12,13,14,15 & 16 to load switch AC+ per the cabinet manufacturer's instructions.
3. Enable Simultaneous Gap-Out, for all phases.
4. Program phases 2 and 6 for Variable Initial and Gap Reduction operation.
5. Program phases 2 and 6 for Start Up In Green.
6. Program phases 2 and 6 for Yellow Flash.
7. The cabinet and controller are part of the NC 59 (Hope Mills Rd)/NC 162 (Hope Mills Byp) CLS.

SIGNAL HEAD HOOK-UP CHART

LOAD SWITCH NO.	S1	S2	S2P	S3		S4		S4P	S5	S6	S6P	S7		S8		S8P	S9	S10	S11	S12	S13	S14
PHASE	1	2	2 PED	3		4		4 PED	5	6	6 PED	7		8		8 PED	OLA	OLB	SPARE	OLC	OLD	SPARE
SIGNAL HEAD NO.	11	21,22	NU	22	31,32	41,42	44	NU	51	61,62	NU	62	71,72	81,82	83,84	NU	NU	NU	NU	NU	NU	NU
RED		128				101	101			134				107	107							
YELLOW		129				102				135				108								
GREEN		130				103				136				109								
RED ARROW	125				116				131				122									
YELLOW ARROW	126			117	117		102		132			123	123		108							
GREEN ARROW	127			118	118		103		133			124	124		109							

NU = NOT USED

EQUIPMENT INFORMATION

CONTROLLER.............EAGLE TYPE 2070
CABINET................EAGLE 332
SOFTWARE...............ECONOLITE OASIS
CABINET MOUNT..........BASE
OUTPUT FILE POSITIONS..18 (12-STD, 6-AUX)
LOAD SWITCHES USED.....S1,S2,S3,S4,S5,S6,S7,S8
PHASES USED............1,2,3,4,5,6,7,8
OVERLAPS...............NONE

INPUT FILE POSITION LAYOUT

(front view)

		1	2	3	4	5	6	7	8	9	10	11	12	13	14
FILE "I"	U	SLOT EMPTY	Ø 1 1A	Ø2/SYS 2A/S11	SLOT EMPTY	Ø 3 3A	Ø 4 4A	Ø 4 4C	SLOT EMPTY	SLOT EMPTY	SLOT EMPTY	SLOT EMPTY	SLOT EMPTY	SLOT EMPTY	FS DC ISOLATOR
	L		NOT USED	Ø2/SYS 2B/S12		Ø 3 3B	Ø 4 4B	NOT USED							ST DC ISOLATOR
FILE "J"	U	SLOT EMPTY	Ø 5 5A	Ø6/SYS 6A/S13	SLOT EMPTY	Ø 7 7A	Ø 8 8A	Ø 8 8C	SLOT EMPTY	SLOT EMPTY	SLOT EMPTY	SLOT EMPTY	SLOT EMPTY	SLOT EMPTY	SLOT EMPTY
	L		NOT USED	Ø6/SYS 6B/S14		Ø 7 7B	Ø 8 8B	NOT USED							

EX.: 1A, 2A, ETC. = LOOP NO.'S

FS = FLASH SENSE
ST = STOP TIME

INPUT FILE CONNECTION & PROGRAMMING CHART

LOOP NO.	LOOP TERMINAL	INPUT FILE POS.	PIN NO.	INPUT ASSIGNMENT NO.	DETECTOR NO.	NEMA PHASE	CALL	EXTEND	FULL TIME DELAY	STRETCH TIME	DELAY TIME
1A	TB2-5,6	I2U	39	1	2	1	Y	Y			
2A/S11	TB2-9,10	I3U	63	25	32	2/SYS	Y	Y			
2B/S12	TB2-11,12	I3L	76	38	42	2/SYS	Y	Y			
3A	TB4-5,6	I5U	58	20	3	3	Y	Y			
3B	TB4-7,8	I5L	58	20	3	3	Y	Y			
4A	TB4-9,10	I6U	41	3	4	4	Y	Y			
4B	TB4-11,12	I6L	45	7	14	4	Y	Y			
4C	TB6-1,2	I7U	65	27	34	4	Y	Y			25
5A	TB3-5,6	J2U	40	2	6	5	Y	Y			
6A/S13	TB3-9,10	J3U	64	26	36	6/SYS	Y	Y			
6B/S14	TB3-11,12	J3L	77	39	46	6/SYS	Y	Y			
7A	TB5-5,6	J5U	57	19	7	7	Y	Y			
7B	TB5-7,8	J5L	57	19	7	7	Y	Y			
8A	TB5-9,10	J6U	42	4	8	8	Y	Y			
8B	TB5-11,12	J6L	46	8	18	8	Y	Y			25
8C	TB7-1,2	J7U	66	28	38	8	Y	Y			25

INPUT FILE POSITION LEGEND: J2L

FILE J
SLOT 2
LOWER

THIS ELECTRICAL DETAIL IS FOR
THE SIGNAL DESIGN: 06-0357
DESIGNED: Oct 2014
SEALED: 1/12/2015
REVISED:

Engineers | Scientists | Planners | Designers
4000 WestChase Boulevard, Suite 530 Raleigh, NC 27607
NC License No. C-3705

Signal Upgrade

ELECTRICAL AND PROGRAMMING DETAILS FOR:

NC 59 (N. Main St/Hope Mills Rd)
at
SR 1003 (Camden Road)

Prepared for the Offices of:
Transportation Mobility and Safety Division
State of North Carolina Department of Transportation
Signals Management Section
750 N.Greenfield Pkwy,Garner,NC 27529

Division 6 | Cumberland County | Hope Mills

PLAN DATE: Oct 2014	REVIEWED BY: J.L. Lewis
PREPARED BY: D.J. Darity	VHB PROJECT NO.: 38286.01

REVISIONS	INIT.	DATE

SEAL
NORTH CAROLINA PROFESSIONAL SEAL 19713 ENGINEER DONALD J. DARITY

DocuSigned by: Don Darity
C80D150DC9834FE...
1/12/2015
DATE

SIG. INVENTORY NO. 06-0357

$$$$$SYSTIME$$$$$
$$$$$$$$$$$$$$$DGN$$$$$$$$$$$$$$$$$
$$$$USERNAME$$$$

PHASING DIAGRAM

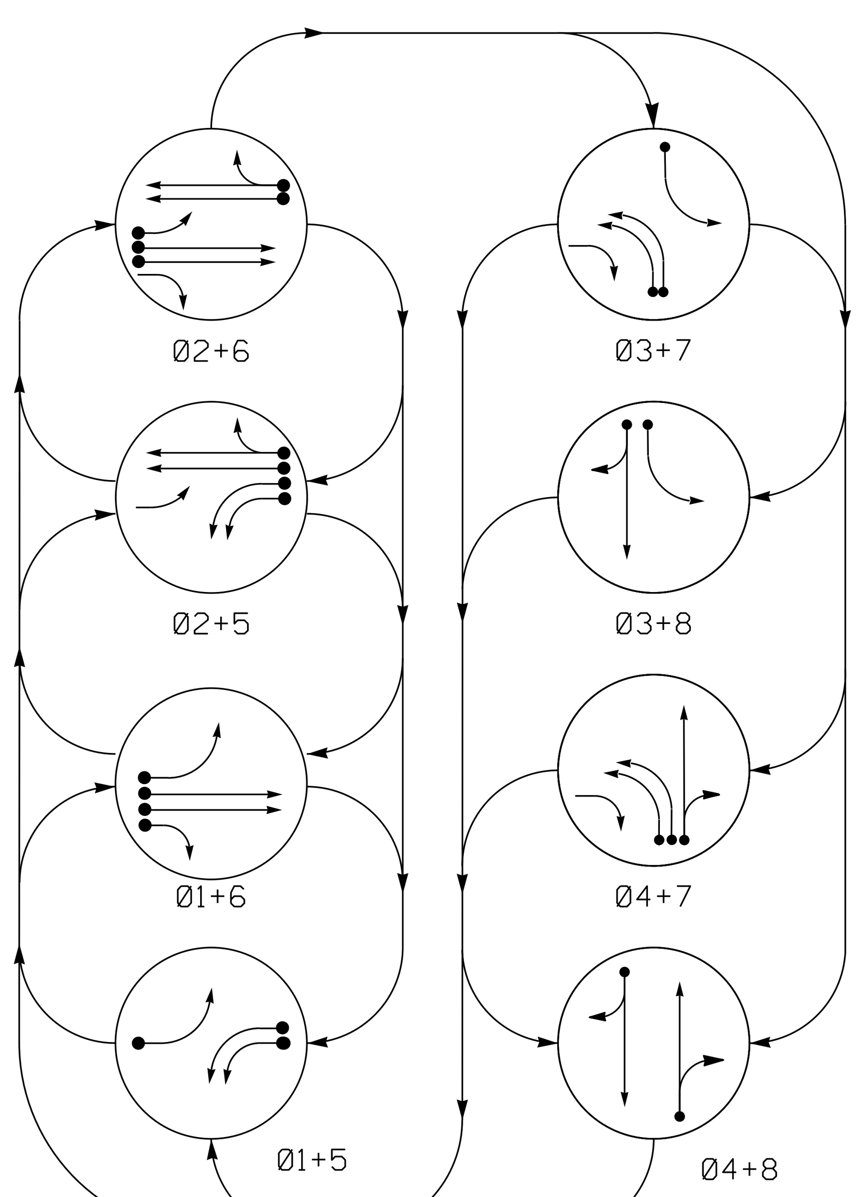

PHASING DIAGRAM DETECTION LEGEND

- DETECTED MOVEMENT
- UNDETECTED MOVEMENT (OVERLAP)
- UNSIGNALIZED MOVEMENT
- PEDESTRIAN MOVEMENT

TABLE OF OPERATION

SIGNAL FACE	PHASE Ø1+5	Ø1+6	Ø2+5	Ø2+6	Ø3+7	Ø3+8	Ø4+7	Ø4+8	FLASH
11	←	←	←F/Y	←F/Y	←R	←R	←R	←R	←Y
21, 22	R	R	G	G	R	R	R	R	Y
31	←R	←R	←R	←R	←	←	←R	←R	←R
41, 42	R	R	R	R	R	R	G	G	R
51, 52	←	←R	←	←R	←R	←R	←R	←R	←R
61	R	G	R	G	R	R	R	R	Y
62	R	G	R	G	R/→	R	R/→	R	Y
71, 72	←R	←R	←R	←R	←	←R	←	←R	←R
81, 82	R	R	R	R	R	G	R	G	R

SIGNAL FACE I.D.

All Heads L.E.D.

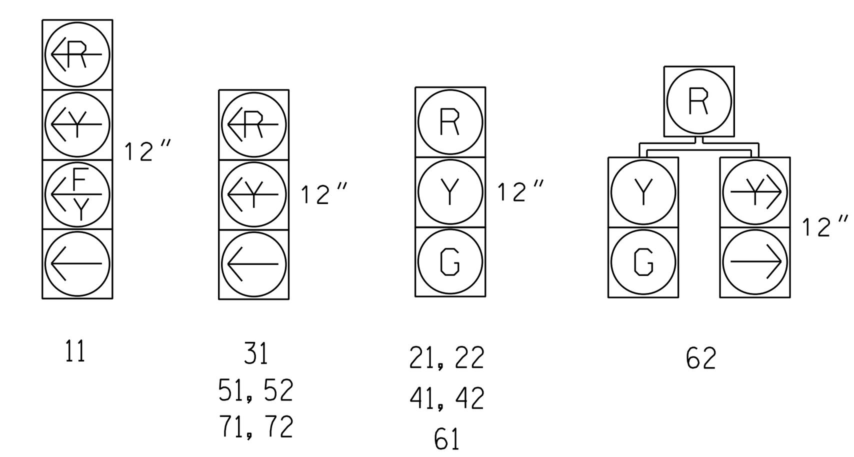

OASIS 2070 LOOP & DETECTOR INSTALLATION CHART

INDUCTIVE LOOPS/ZONES LOOP/ ZONE	SIZE (FT)	DISTANCE FROM STOPBAR (FT)	TURNS	NEW LOOP	DETECTOR PROGRAMMING PHASE	CALLING	EXTENSION	FULL TIME DELAY	STRETCH TIME	DELAY TIME	SYSTEM LOOP	NEW CARD
1A	6X40	0	2-4-2	Y	1	Y	Y	-	-	15	-	-
					6	Y	Y	-	-	-	-	-
2A, 2B	6X6	70	4	Y	2	Y	Y	-	-	-	-	-
3A	✳	0	✳	Y	3	Y	Y	-	-	3	-	-
4A	6X40	0	2-4-2	Y	4	Y	Y	-	-	10	-	-
5A	6X40	0	2-4-2	Y	5	Y	Y	-	-	-	-	-
5B	6X40	0	2-4-2	Y	5	Y	Y	-	-	-	-	-
6A, 6B	6X6	70	4	Y	6	Y	Y	-	-	-	-	-
7A	6X40	0	2-4-2	Y	7	Y	Y	-	-	-	-	Y
7B	6X40	0	2-4-2	Y	7	Y	Y	-	-	-	-	Y
8A	✳	0	✳	Y	8	Y	Y	-	-	10	-	Y

✳ Multizone Microwave Detection

8 Phase
Fully Actuated
NC 59 (Hope Mills Rd)/NC 162 (Hope Mills Byp) CLS

NOTES

1. Refer to "Roadway Standard Drawings NCDOT" dated January 2012 and "Standard Specifications for Roads and Structures" dated January 2012.
2. Do not program signal for late night flashing operation unless otherwise directed by the Engineer.
3. Phase 1 and/or phase 5 may be lagged.
4. Phase 3 and/or phase 7 may be lagged.
5. Reposition existing signal head numbered 11.
6. Set all detector units to presence mode.
7. Maximum times shown in timing chart are for free-run operation only. Coordinated signal system timing values supersede these values.
8. Closed loop system data: Controller Asset# 1226.

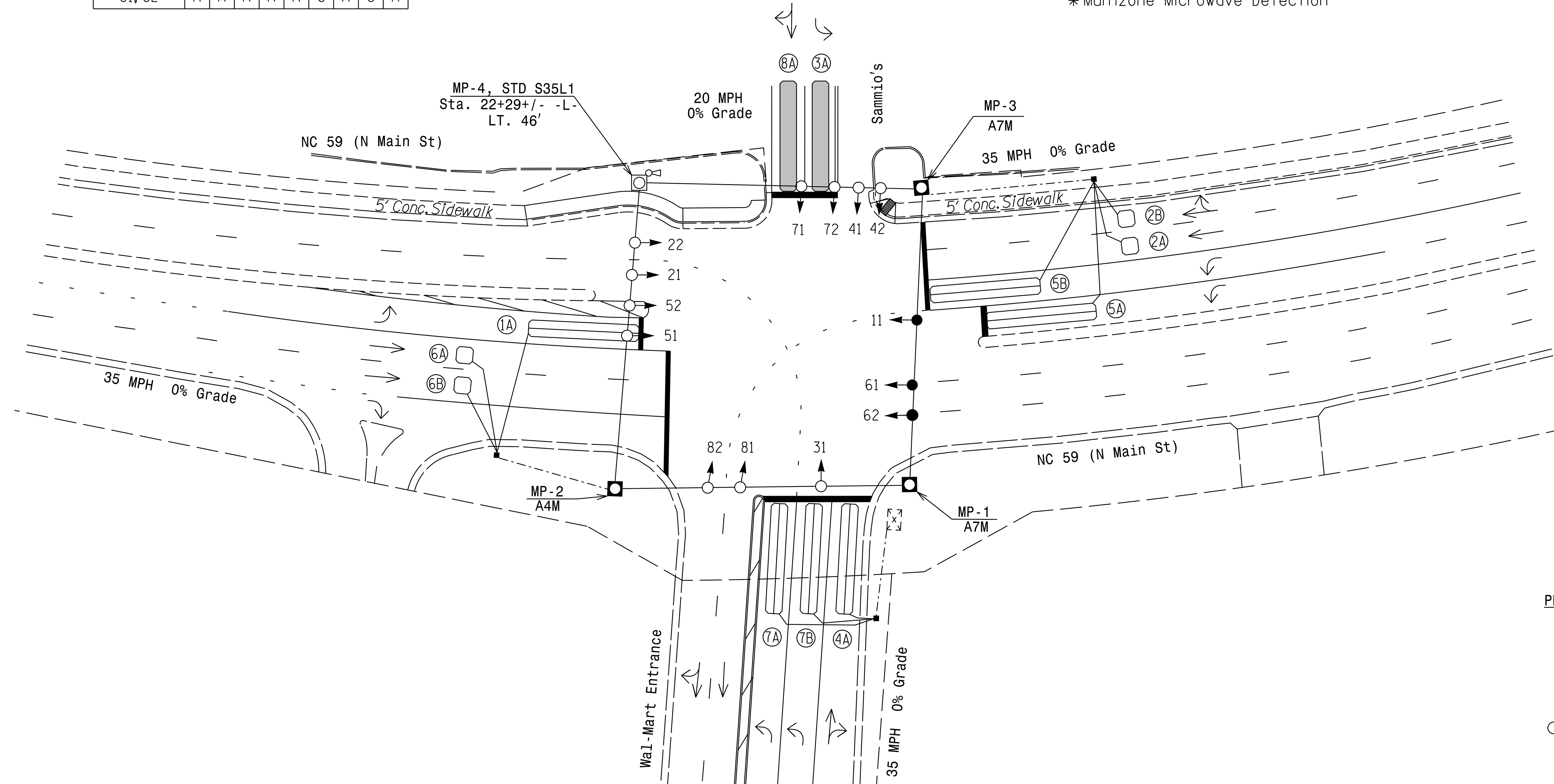

LEGEND

PROPOSED		EXISTING
○→	Traffic Signal Head	●→
◐→	Modified Signal Head	N/A
⊣	Sign	⊣
□	Pedestrian Signal Head With Push Button & Sign	■
○—)	Signal Pole with Guy	●—◗
○┐	Signal Pole with Sidewalk Guy	●┐
◙	Metal Strain Pole	◙
▭	Inductive Loop Detector	⊏- - -⊐
▬	Multizone Microwave Zone	▬
⊠	Controller & Cabinet	⊠
□	Junction Box	■
-·-·-·-	2-in Underground Conduit	-·-·-·-
N/A	Curb Ramp	⋀
— — —	Right of Way	— — —
⟶	Directional Arrow	⟶
○◁	Multizone Microwave Detector	●◀

OASIS 2070 TIMING CHART

FEATURE	PHASE 1	2	3	4	5	6	7	8
Min Green 1 *	7	10	7	7	7	10	7	7
Extension 1	2.0	3.0	2.0	2.0	2.0	3.0	2.0	2.0
Max Green 1 *	15	60	15	25	25	60	15	25
Yellow Clearance	3.0	3.8	3.0	3.8	3.0	3.8	3.0	3.8
Red Clearance	2.9	2.1	2.3	2.0	3.3	2.1	3.2	3.2
Walk 1 *	-	-	-	-	-	-	-	-
Don't Walk 1	-	-	-	-	-	-	-	-
Seconds Per Actuation *	-	-	-	-	-	-	-	-
Max Variable Initial *	-	-	-	-	-	-	-	-
Time Before Reduction *	-	-	-	-	-	-	-	-
Time To Reduce *	-	-	-	-	-	-	-	-
Minimum Gap	-	-	-	-	-	-	-	-
Recall Mode	-	MIN RECALL	-	-	-	MIN RECALL	-	-
Vehicle Call Memory	-	YELLOW	-	-	-	YELLOW	-	-
Dual Entry	-	-	-	-	-	-	-	-
Simultaneous Gap	ON	ON	ON	ON	ON	ON	ON	ON

* These values may be field adjusted. Do not adjust Min Green and Extension times for phases 2 and 6 lower than what is shown. Min Green for all other phases should not be lower than 4 seconds.

METAL POLE & STOP BAR LOCATIONS

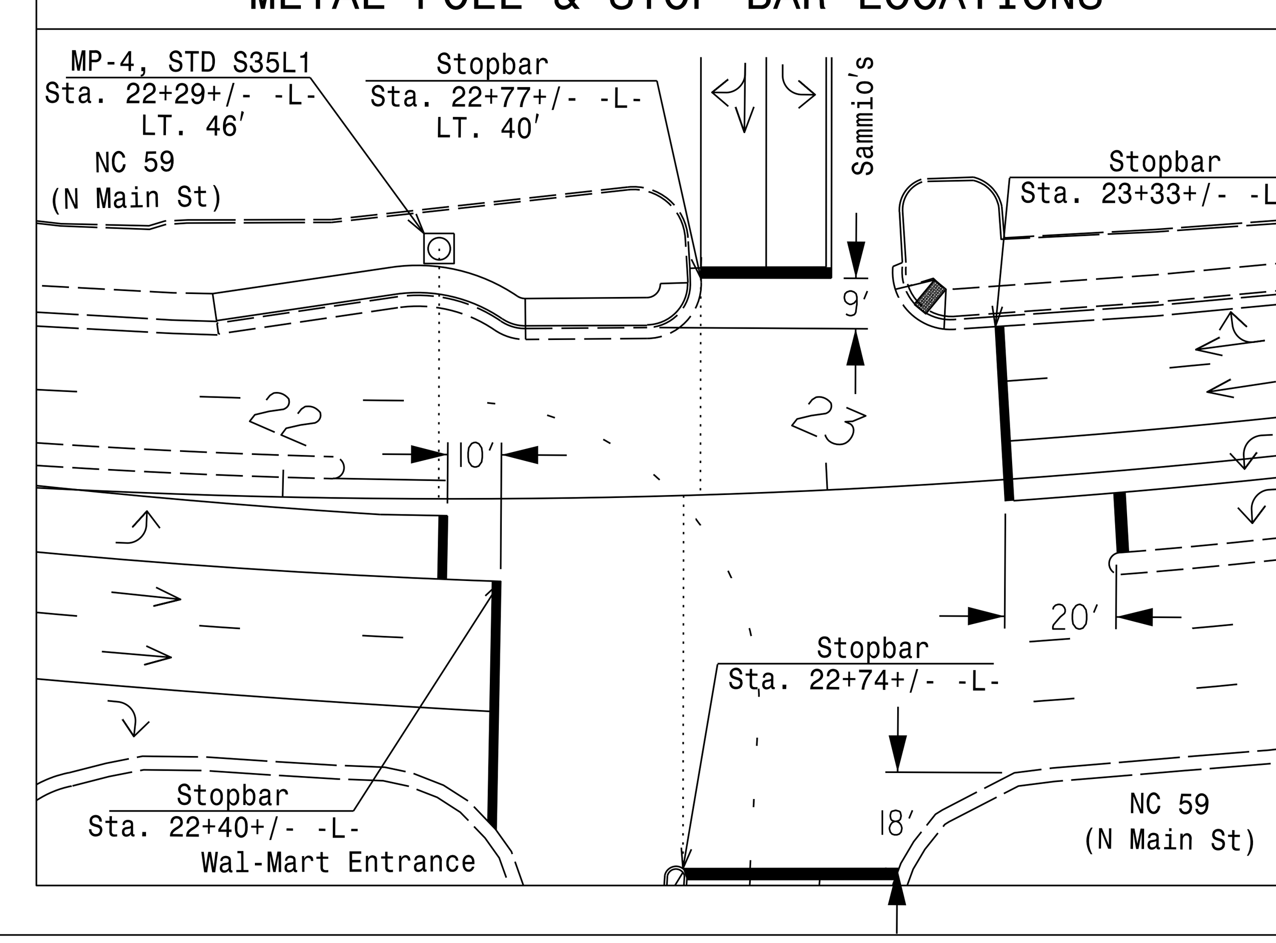

$$$$$SYSTIME$$$$$
$$$$$$$$$$$$$$$DGN$$$$$$$$$$$$$$$$$
$$$$USERNAME$$$$

vhb
Engineers | Scientists | Planners | Designers
4000 WestChase Boulevard, Suite 530 Raleigh, NC 27607
NC License No. C-3705

Signal Upgrade

Prepared for the Offices of:
Transportation Mobility and Safety Division — State of North Carolina Department of Transportation — Signal Design Section
750 N.Greenfield Pkwy.Garner,NC 27529

NC 59 (N. Main Street) at Walmart/Sammio's

Division 6 | Cumberland County | Hope Mills

PLAN DATE: Oct 2014	REVIEWED BY: J.L. Lewis
PREPARED BY: D.J. Darity	VHB PROJECT NO.: 38286.01

SCALE 0 30 1"=30'

REVISIONS	INIT.	DATE

SEAL
NORTH CAROLINA PROFESSIONAL SEAL 19713 ENGINEER DONALD J. DARITY
DocuSigned by: Don Darity C80D150DC9834FE...
1/12/2015
DATE

SIG. INVENTORY NO. 06-1226

PROJECT REFERENCE NO.	SHEET NO.
W-5206AA	Sig.2.1

EDI MODEL 2010ECL-NC CONFLICT MONITOR PROGRAMMING DETAIL

(remove jumpers and set switches as shown)

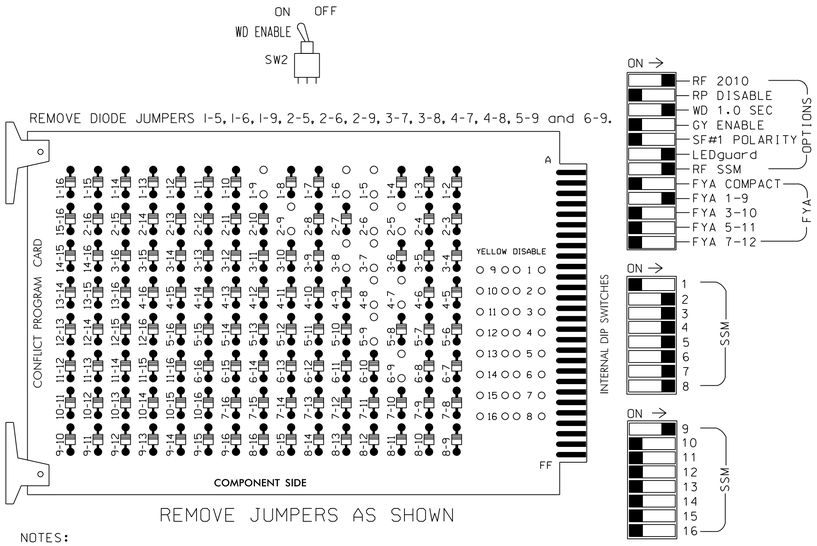

REMOVE JUMPERS AS SHOWN

NOTES:

1. Card is provided with all diode jumpers in place. Removal of any jumper allows its channels to run concurrently.
2. Make sure jumpers SEL2-SEL5 are present on the monitor board.

■ = DENOTES POSITION OF SWITCH

NOTES

1. To prevent "flash-conflict" problems, insert red flash program blocks for all unused vehicle load switches in the output file. The installer shall verify that signal heads flash in accordance with the Signal Plans.
2. Ensure that Red Enable is active at all times during normal operation. To prevent Red Failures on unused monitor channels, tie unused red monitor inputs 1, 10,11,12,13,14,15 & 16 to load switch AC+ per the cabinet manufacturer's instructions.
4. Enable Simultaneous Gap-Out for all phases.
5. Program phases 2 and 6 for Start Up In Green.
6. Program phases 2 and 6 for Yellow Flash, and overlap 1 as Wag Overlaps.
7. The cabinet and controller are part of the NC 59 (Hope Mills Rd)/NC 162 (Hope Mills Byp) CLS.

SIGNAL HEAD HOOK-UP CHART

LOAD SWITCH NO.	S1	S2	S2P	S3	S4	S4P	S5	S6	S6P	S7		S8	S8P	S9	S10	S11	S12	S13	S14
PHASE	1	2	2 PED	3	4	4 PED	5	6	6 PED	7		8	8 PED	OLA	OLB	SPARE	OLC	OLD	SPARE
SIGNAL HEAD NO.	11★	21,22	NU	31	41,42	NU	51,52	61,62	NU	62	71,72	81,82	NU	11★	NU	NU	NU	NU	NU
RED		128			101			134				107							
YELLOW	✳	129			102			135				108							
GREEN		130			103			136				109							
RED ARROW				116			131				122			A121					
YELLOW ARROW				117			132			123	123			A122					
FLASHING YELLOW ARROW														A123					
GREEN ARROW	127			118			133			124	124								

NU = Not Used

✳ Denotes install load resistor. See load resistor installation detail this sheet.

★ See pictorial of head wiring in detail below.

EQUIPMENT INFORMATION

CONTROLLER.....2070
CABINET.....332 /W/ AUX
SOFTWARE.....ECONOLITE OASIS
CABINET MOUNT.....BASE
OUTPUT FILE POSITIONS...18 WITH AUX. OUTPUT FILE
LOAD SWITCHES USED.....S1,S2,S3,S4,S5,S6,S7,S8,S9
PHASES USED.....1,2,3,4,5,6,7,8
OVERLAP "A".....1+2
OVERLAP "B".....NOT USED
OVERLAP "C".....NOT USED
OVERLAP "D".....NOT USED

4 SECTION FYA PPLT SIGNAL WIRING DETAIL

(wire signal heads as shown)

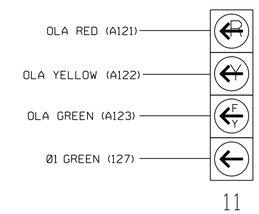

NOTE

1. The sequence display for this signal requires special logic programming. See sheet 2 for programming instructions.

INPUT FILE POSITION LAYOUT

(front view)

		1	2	3	4	5	6	7	8	9	10	11	12	13	14
FILE "I"	U	Ø 1 1A	Ø 2 2A,2B	SLOT EMPTY	SLOT EMPTY	Ø 3 ✳ 3A	Ø 4 4A	SLOT EMPTY	SLOT EMPTY	SLOT EMPTY	SLOT EMPTY	SLOT EMPTY	SLOT EMPTY	SLOT EMPTY	FS DC ISOLATOR
	L	NOT USED	NOT USED			NOT USED	NOT USED								ST DC ISOLATOR
FILE "J"	U	Ø 5 5A	Ø 6 6A,6B	SLOT EMPTY	WIRED INPUT ⊗	Ø 7 7A	Ø 8 ✳ 8A	SLOT EMPTY	SLOT EMPTY	SLOT EMPTY	SLOT EMPTY	SLOT EMPTY	SLOT EMPTY	SLOT EMPTY	SLOT EMPTY
	L	Ø 5 5B	NOT USED			Ø 7 7B	NOT USED								

EX.: 1A, 2A, ETC. = LOOP NO.'S
✳ Multizone Microwave Detection Zone

FS = FLASH SENSE
ST = STOP TIME

⊗ Wired Input - Do not populate slot with detector card

INPUT FILE CONNECTION & PROGRAMMING CHART

LOOP NO.	LOOP TERMINAL	INPUT FILE POS.	PIN NO.	INPUT ASSIGNMENT NO.	DETECTOR NO.	NEMA PHASE	CALL	EXTEND	FULL TIME DELAY	STRETCH TIME	DELAY TIME
1A[1]	TB2-1,2	I1U	56	18	1	1	Y	Y			15
	-	J4U	48	10	26	6	Y	Y			
2A, 2B	TB2-5,6	I2U	39	1	2	2	Y	Y			
✳ 3A	TB4-5,6	I5U	58	20	3	3	Y	Y			3
4A	TB4-9,10	I6U	41	3	4	4	Y	Y			10
5A	TB3-1,2	J1U	55	17	5	5	Y	Y			
5B	TB3-3,4	J1L	55	17	5	5	Y	Y			
6A, 6B	TB3-9,10	J3U	64	26	36	6	Y	Y			
7A	TB5-5,6	J5U	57	19	7	7	Y	Y			
7B	TB5-7,8	J5L	57	19	7	7	Y	Y			
✳ 8A	TB5-9,10	J6U	42	4	8	8	Y	Y			10

[1] Add jumper from I1-W to J4-W, on rear of input file.

✳ Multizone Microwave Detection Zone. See Special Detector Note below.

INPUT FILE POSITION LEGEND: J2L
FILE J
SLOT 2
LOWER

THIS ELECTRICAL DETAIL IS FOR
THE SIGNAL DESIGN: 06-1226
DESIGNED: Oct 2014
SEALED: 1/12/2015
REVISED: N/A

LOAD RESISTOR INSTALLATION DETAIL

ACCEPTABLE VALUES

VALUE (ohms)	WATTAGE
1.5K - 1.9K	25W (min)
2.0K - 3.0K	10W (min)

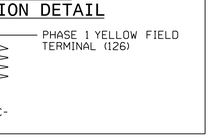

SPECIAL DETECTOR NOTE

Install a multizone microwave detection system for vehicle detection. Perform installation according to the manufacturer's directions and NCDOT Engineer approved mounting locations to accomplish the detection schemes shown on the Signal Design Plans.

vhb
Engineers | Scientists | Planners | Designers
4000 WestChase Boulevard, Suite 530 Raleigh, NC 27607
NC License No. C-3705

Signal Upgrade — ELECTRICAL DETAIL SHEET 1 OF 2

ELECTRICAL AND PROGRAMMING DETAILS FOR:

Prepared for the Offices of:
Transportation Mobility and Safety Division
STATE OF NORTH CAROLINA DEPARTMENT OF TRANSPORTATION
Signals Management Section
750 N.Greenfield Pkwy,Garner,NC 27529

NC 59 (N. Main Street) at Walmart/Sammio's

Division 6 — Cumberland County — Hope Mills

PLAN DATE:	Oct 2014	REVIEWED BY:	J.L. Lewis
PREPARED BY:	D.J. Darity	VHB PROJECT NO.:	38286.01

REVISIONS	INIT.	DATE

SEAL
NORTH CAROLINA PROFESSIONAL SEAL 19713 ENGINEER DONALD J. DARITY

DocuSigned by: Don Darity C80D150DC9834FE... 1/12/2015
DATE

SIG. INVENTORY NO. 06-1226

$$$$$SYSTIME$$$$$
$$$$$SYSDATE$$$$$
$$$$$USERNAME$$$$

PROJECT REFERENCE NO.	SHEET NO.
W-5206AA	Sig.2.2

LOGICAL I/O PROCESSOR PROGRAMMING DETAIL
TO PRODUCE SPECIAL FYA-PPLT SIGNAL SEQUENCE

(program controller as shown below)

1. FROM MAIN MENU PRESS '2' (PHASE CONTROL), THEN '1' (PHASE CONTROL FUNCTIONS). SCROLL TO THE BOTTOM OF THE MENU AND ENABLE ACT LOGIC COMMANDS 1, 2 and 3.

2. FROM MAIN MENU PRESS '6' (OUTPUTS), THEN '3' (LOGICAL I/O PROCESSOR).

```
  LOGICAL I/O COMMAND #1  (+/-COMMAND#)
IF  ACTIVE PHASE       #1  IS ON
AND RED CLEAR ON PHASE #1  IS ON

                 SCROLL DOWN

THEN:
SET OUTPUT  ASSIGNMENT #50 ON
SET OUTPUT  ASSIGNMENT #51 OFF
```

NOTE: LOGIC FOR PHASE 1 RED CLEAR WHEN TRANSITIONING FROM PHASE 1 TO PHASE 2 (HEAD 11).

PRESS '+'

```
  LOGICAL I/O COMMAND #2  (+/-COMMAND#)
IF  ACTIVE PHASE       #1  IS ON

                 SCROLL DOWN

THEN:
SET OUTPUT  ASSIGNMENT #52 OFF
```

NOTE: LOGIC FOR SWITCHING FLASHING YELLOW ARROW "OFF" DURING PHASE 1 (HEAD 11).

PRESS '+'

```
  LOGICAL I/O COMMAND #3  (+/-COMMAND#)
IF  YELLOW ON PHASE    #1  IS ON

                 SCROLL DOWN

THEN:
SET OUTPUT  ASSIGNMENT #51 ON
```

NOTE: LOGIC FOR YELLOW ARROW CLEARANCE FROM PHASE 1 (HEAD 11).

LOGIC I/O PROCESSOR PROGRAMMING COMPLETE

OUTPUT REFERENCE SCHEDULE

OUTPUT 50 = Overlap A Red
OUTPUT 51 = Overlap A Yellow
OUTPUT 52 = Overlap A Green

OVERLAP PROGRAMMING DETAIL

(program controller as shown below)

FROM MAIN MENU PRESS '8' (OVERLAPS), THEN '1' (VEHICLE OVERLAP SETTINGS).

```
 PAGE 1: VEHICLE OVERLAP 'A' SETTINGS
 PHASE:          |123456789101112131415 16
VEH OVL PARENTS: |XX
VEH OVL NOT VEH: |
VEH OVL NOT PED: |
VEH OVL GRN EXT: |
STARTUP COLOR: _ RED  _ YELLOW  _ GREEN
FLASH COLORS:  _ RED  _ YELLOW  X GREEN
SELECT VEHICLE OVERLAP OPTIONS:   (Y/N)
FLASH YELLOW IN CONTROLLER FLASH?...Y
GREEN EXTENSION (0-255 SEC).........0
YELLOW CLEAR (0=PARENT,3-25.5 SEC)..0.0
RED CLEAR (0=PARENT,0.1-25.5 SEC)...0.0
OUTPUT AS PHASE # (0=NONE, 1-16)....0
```

← NOTICE GREEN FLASH

OVERLAP PROGRAMMING COMPLETE

THIS ELECTRICAL DETAIL IS FOR
THE SIGNAL DESIGN: 06-1226
DESIGNED: Oct 2014
SEALED: 1/12/2015
REVISED: N/A

Signal Upgrade — ELECTRICAL DETAIL SHEET 2 OF 2

ELECTRICAL AND PROGRAMMING DETAILS FOR:

Prepared for the Offices of:

Transportation Mobility and Safety Division — STATE OF NORTH CAROLINA — DEPT. OF TRANSPORTATION — Signal Management Section

750 N.Greenfield Pkwy,Garner,NC 27529

NC 59 (N. Main Street) at Walmart/Sammio's

Division 6 — Cumberland County — Hope Mills

PLAN DATE:	Oct 2014	REVIEWED BY:	J.L. Lewis
PREPARED BY:	D.J. Darity	VHB PROJECT NO.:	38286.01

REVISIONS	INIT.	DATE

SEAL — NORTH CAROLINA PROFESSIONAL SEAL 19713 ENGINEER DONALD J. DARITY

DocuSigned by: Don Darity — C80D150DC9834FE...

1/12/2015 — DATE

SIG. INVENTORY NO. 06-1226

vhb — Engineers | Scientists | Planners | Designers
4000 WestChase Boulevard, Suite 530 Raleigh, NC 27607
NC License No. C-3705

$$$$$SYSTIME$$$$$
$$$$$SYSTIME$$$$$DGN$$$$$$$$$$$$$$$$$$$$$
$$$$USERNAME$$$$

PROJECT REFERENCE NO.	SHEET NO.
W-5206AA	Sig.3.0

6 Phase
Fully Actuated
NC 59 (Hope Mills Rd)/NC 162 (Hope Mills Byp) CLS

PHASING DIAGRAM

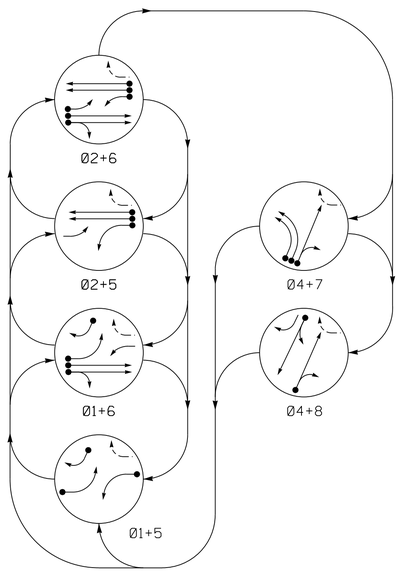

PHASING DIAGRAM DETECTION LEGEND

- DETECTED MOVEMENT
- UNDETECTED MOVEMENT (OVERLAP)
- UNSIGNALIZED MOVEMENT
- PEDESTRIAN MOVEMENT

TABLE OF OPERATION

SIGNAL FACE	PHASE 01+5	01+6	02+5	02+6	04+7	04+8	FLASH
11	←	←	F Y	F Y	~~R~~	~~R~~	~~Y~~
21, 22	R	R	G	G	R	R	Y
41, 42	R	R	R	R	G	G	R
51	←	F Y	←	F Y	~~R~~	~~R~~	~~Y~~
61, 62	R	G	R	G	R	R	Y
71, 72	~~R~~	~~R~~	~~R~~	~~R~~	←	~~R~~	~~R~~
81	R	R	R	R	R	G	R
82	R/→	R/→	R	R	R	G	R

SIGNAL FACE I.D.

All Heads L.E.D.

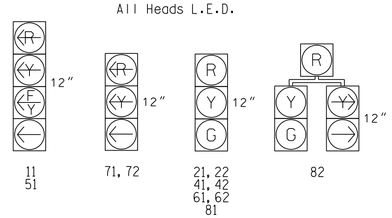

OASIS 2070 LOOP & DETECTOR INSTALLATION CHART

INDUCTIVE LOOPS					DETECTOR PROGRAMMING						
LOOP	SIZE (FT)	DISTANCE FROM STOPBAR (FT)	TURNS	NEW LOOP	PHASE	CALLING	EXTENSION	FULL TIME DELAY	STRETCH TIME	DELAY TIME	SYSTEM LOOP	NEW CARD
1A	6X40	0	2-4-2	Y	1	Y	Y	-	-	15	-	-
					6	Y	Y	-	-	-	-	-
1B	6X40	0	2-4-2	Y	1	Y	Y	-	-	15	-	-
2A, 2B	6X6	70	4	Y	2	Y	Y	-	-	-	-	-
4A	6X40	0	2-4-2	Y	4	Y	Y	-	-	10	-	-
4B	6X15	0	4	Y	4	Y	Y	-	-	15	-	-
5A	6X40	0	2-4-2	Y	5	Y	Y	-	-	15	-	-
					2	Y	Y	-	-	-	-	-
6A, 6B	6X6	70	4	Y	6	Y	Y	-	-	-	-	-
7A	6X40	0	2-4-2	Y	7	Y	Y	-	-	3	-	Y
7B	6X40	0	2-4-2	Y	7	Y	Y	-	-	-	-	Y
8A	6X40	0	2-4-2	Y	8	Y	Y	-	-	3	-	Y
S15	6X6	+200	4	Y	-	-	-	-	-	-	Y	-
S16	6X6	+200	4	Y	-	-	-	-	-	-	Y	-
S17	6X6	+200	4	Y	-	-	-	-	-	-	Y	-
S18	6X6	+200	4	Y	-	-	-	-	-	-	Y	-

NOTES

1. Refer to "Roadway Standard Drawings NCDOT" dated January 2012 and Standard Specifications for Roads and Structures" dated January 2012.
2. Do not program signal for late night flashing operation unless otherwise directed by the Engineer.
3. Omit phase 7 during phase 8 on.
4. Phase 1 and/or phase 5 may be lagged.
5. Reposition existing signal heads numbered 21, 22 and 51.
6. Set all detector units to presence mode.
7. Maximum times shown in timing chart are for free-run operation only. Coordinated signal system timing values supersede these values.
8. Closed loop system data: Controller Asset #0584.

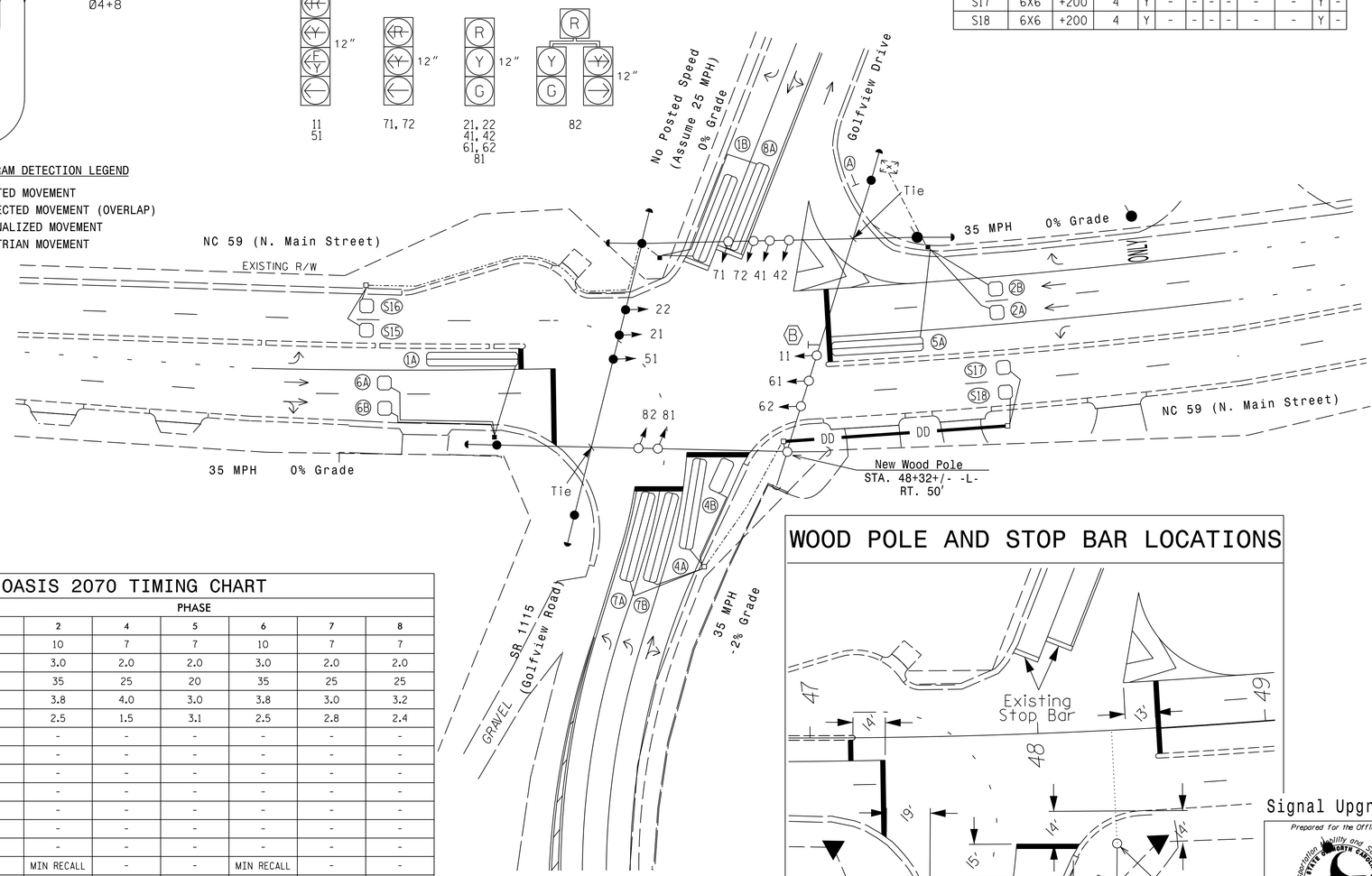

WOOD POLE AND STOP BAR LOCATIONS

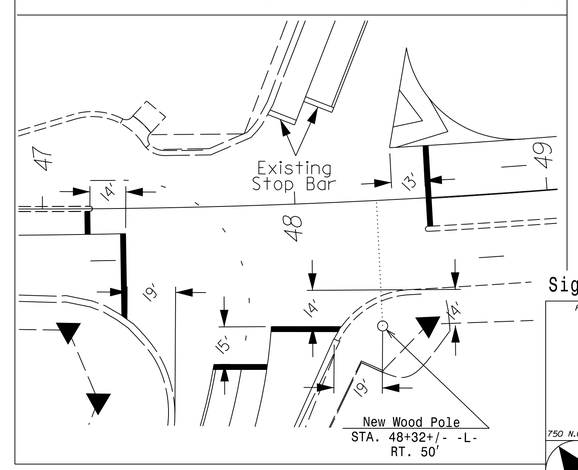

LEGEND

PROPOSED		EXISTING
	Traffic Signal Head	
	Modified Signal Head	N/A
	Sign	
	Pedestrian Signal Head With Push Button & Sign	
	Signal Pole with Guy	
	Signal Pole with Sidewalk Guy	
	Inductive Loop Detector	
	Controller & Cabinet	
	Junction Box	
	2-in Underground Conduit	
DD	Directional Drill	
	Stop Bar	
	Right of Way	
	Directional Arrow	
A	"YIELD" Sign (R1-2)	A
B	"U-TURN YIELD TO RIGHT TURN" Sign (R10-16)	B

OASIS 2070 TIMING CHART

FEATURE	PHASE 1	2	4	5	6	7	8
Min Green 1 *	7	10	7	7	10	7	7
Extension 1 *	2.0	3.0	2.0	2.0	3.0	2.0	2.0
Max Green 1 *	25	35	25	20	35	25	25
Yellow Clearance	3.0	3.8	4.0	3.0	3.8	3.0	3.2
Red Clearance	3.3	2.5	1.5	3.1	2.5	2.8	2.4
Walk 1 *	-	-	-	-	-	-	-
Don't Walk 1	-	-	-	-	-	-	-
Seconds Per Actuation *	-	-	-	-	-	-	-
Max Variable Initial *	-	-	-	-	-	-	-
Time Before Reduction *	-	-	-	-	-	-	-
Time To Reduce *	-	-	-	-	-	-	-
Minimum Gap	-	-	-	-	-	-	-
Recall Mode	-	MIN RECALL	-	-	MIN RECALL	-	-
Vehicle Call Memory	-	YELLOW	-	-	YELLOW	-	-
Dual Entry	-	-	ON	-	-	-	-
Simultaneous Gap	ON	ON	ON	ON	ON	ON	ON

* These values may be field adjusted. Do not adjust Min Green and Extension times for phases 2 and 6 lower than what is shown. Min Green for all other phases should not be lower than 4 seconds.

$$$$$$SYSTIME$$$$
$$$$$$$$$$$$$$$$$$DGN$$$$$$$$$$$$$$$$$$
$$$$USERNAME$$$$

Signal Upgrade

vhb
Engineers | Scientists | Planners | Designers
4000 WestChase Boulevard, Suite 530 Raleigh, NC 27607
NC License No. C-3705

Prepared for the Offices of:
Transportation Mobility and Safety Division
STATE OF NORTH CAROLINA DEPARTMENT OF TRANSPORTATION
Signal Design Section
750 N.Greenfield Pkwy,Garner,NC 27529

SCALE 0 30 1" = 30'

NC 59 (N. Main Street)
at
SR 1115 (Golfview Road)

Division 6 Cumberland County Hope Mills

PLAN DATE:	Oct 2014	REVIEWED BY:	J.L. Lewis
PREPARED BY:	D.J. Darity	VHB PROJECT NO.:	38286.01

REVISIONS	INIT.	DATE

SEAL
NORTH CAROLINA PROFESSIONAL SEAL 19713 ENGINEER DONALD J. DARITY

DocuSigned by: Don Darity C80D150DC9834FIE...
1/12/2015
DATE

SIG. INVENTORY NO. 06-0584

EDI MODEL 2010ECL-NC CONFLICT MONITOR PROGRAMMING DETAIL

(remove jumpers and set switches as shown)

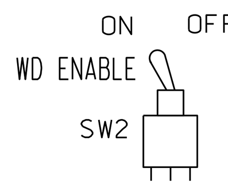

REMOVE DIODE JUMPERS 1-5, 1-6, 1-9, 1-11, 2-5, 2-6, 2-9, 2-11, 4-7, 4-8, 5-9, 5-11, 6-9, 6-11 AND 9-11.

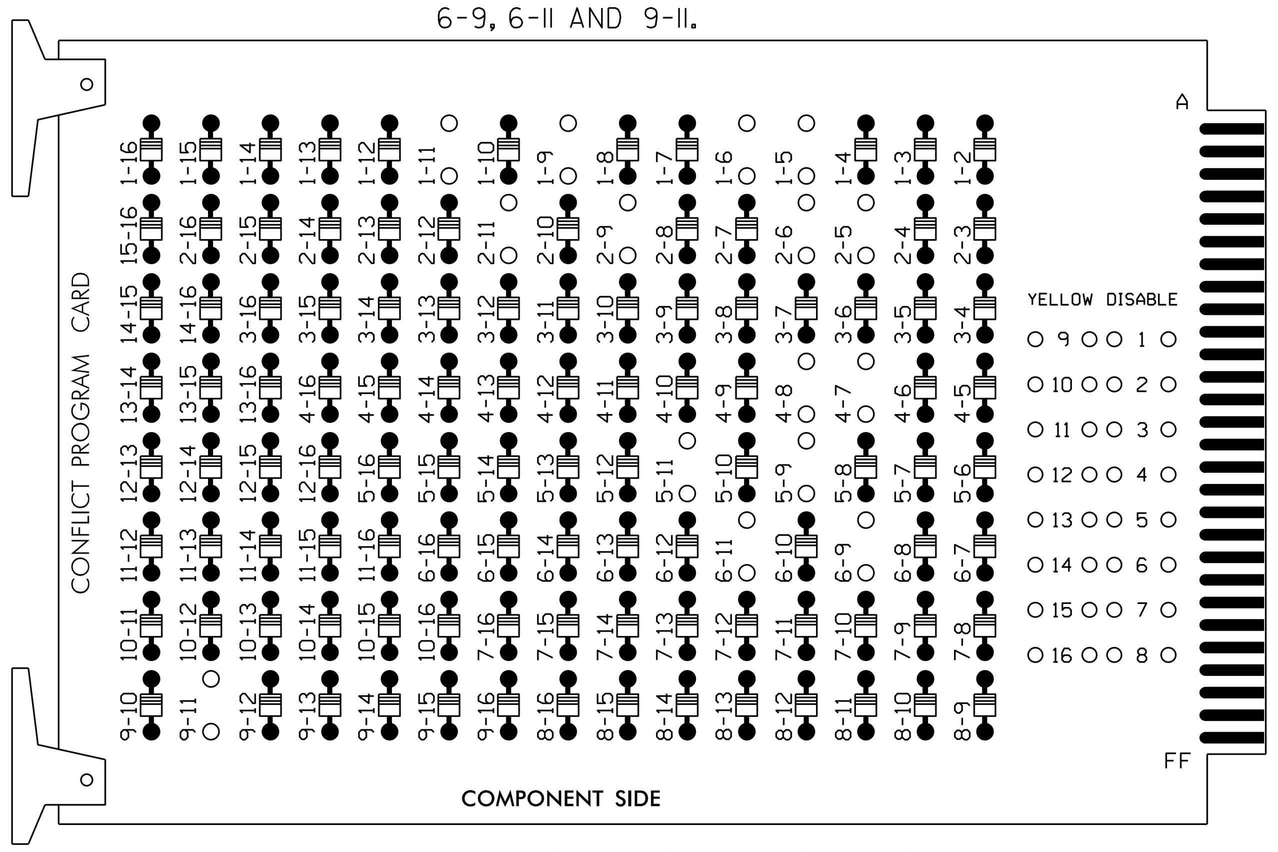

REMOVE JUMPERS AS SHOWN

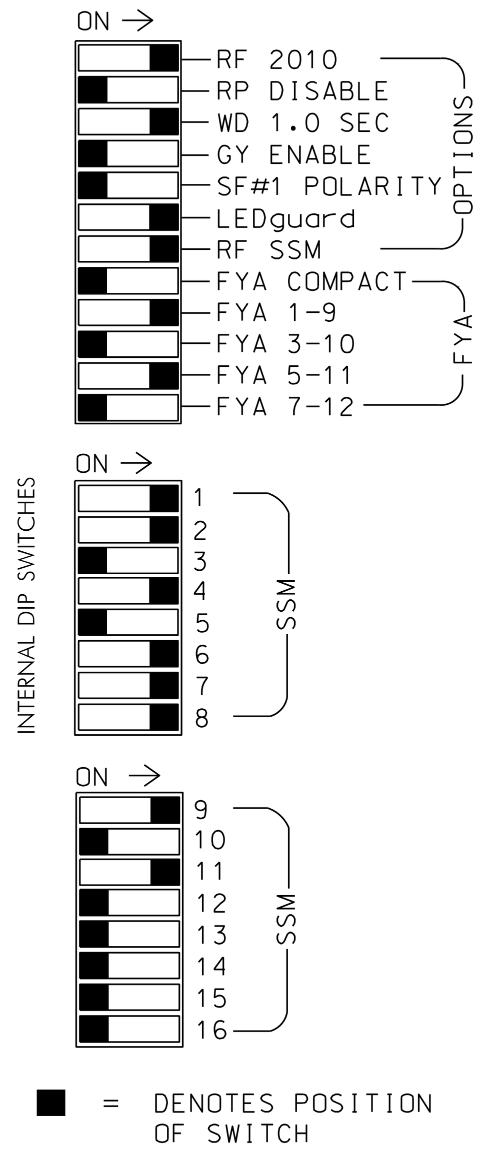

NOTES:

1. Card is provided with all diode jumpers in place. Removal of any jumper allows its channels to run concurrently.
2. Make sure jumpers SEL2-SEL5 are present on the monitor board.

NOTES

1. To prevent "flash-conflict" problems, insert red flash program blocks for all unused vehicle load switches in the output file. The installer shall verify that signal heads flash in accordance with the Signal Plans.
2. Ensure that Red Enable is active at all times during normal operation. To prevent Red Failures on unused monitor channels, tie unused red monitor inputs 3,5, 10,12,13,14,15 & 16 to load switch AC+ per the cabinet manufacturer's instructions.
3. Program phase 4 for Dual Entry.
4. Enable Simultaneous Gap-Out for all phases.
5. Program phases 2 and 6 for Start Up In Green.
6. Program phases 2 and 6 for Yellow Flash, and overlap 1 as Wag Overlaps.
7. The cabinet and controller are part of the NC 59 Closed Loop System.

EQUIPMENT INFORMATION

CONTROLLER..............2070
CABINET.................332 /W/ AUX
SOFTWARE................ECONOLITE OASIS
CABINET MOUNT...........BASE
OUTPUT FILE POSITIONS...18 WITH AUX. OUTPUT FILE
LOAD SWITCHES USED......S1,S2,S4,S5,S6,S7,S8,S9,S12.
PHASES USED.............1,2,4,5,6,7,8.
OVERLAP "A".............1+2
OVERLAP "B".............NOT USED
OVERLAP "C".............5+6
OVERLAP "D".............NOT USED

PROJECT REFERENCE NO.	SHEET NO.
W-5206AA	Sig.3.1

SIGNAL HEAD HOOK-UP CHART

LOAD SWITCH NO.	S1		S2	S2P	S3	S4	S4P	S5	S6	S6P	S7	S8	S8P	S9	S10	S11	S12	S13	S14
PHASE	1		2	2 PED	3	4	4 PED	5	6	6 PED	7	8	8 PED	OLA★	OLB	SPARE	OLC★	OLD	SPARE
SIGNAL HEAD NO.	11★	82	21,22	NU	NU	41,42	NU	51★	61,62	NU	71,72	81,82	NU	11	NU	NU	51	NU	NU
RED	✳		128			101			134			107							
YELLOW			129			102		✳	135			108							
GREEN			130			103			136			109							
RED ARROW											122			A121			A114		
YELLOW ARROW		126									123			A122			A115		
FLASHING YELLOW ARROW														A123			A116		
GREEN ARROW	127	127						133			124								

NU = Not Used

✳ Denotes install load resistor. See load resistor installation detail this sheet.

★ See pictorial of head wiring in detail below.

4 SECTION FYA PPLT SIGNAL WIRING DETAIL

(wire signal heads as shown)

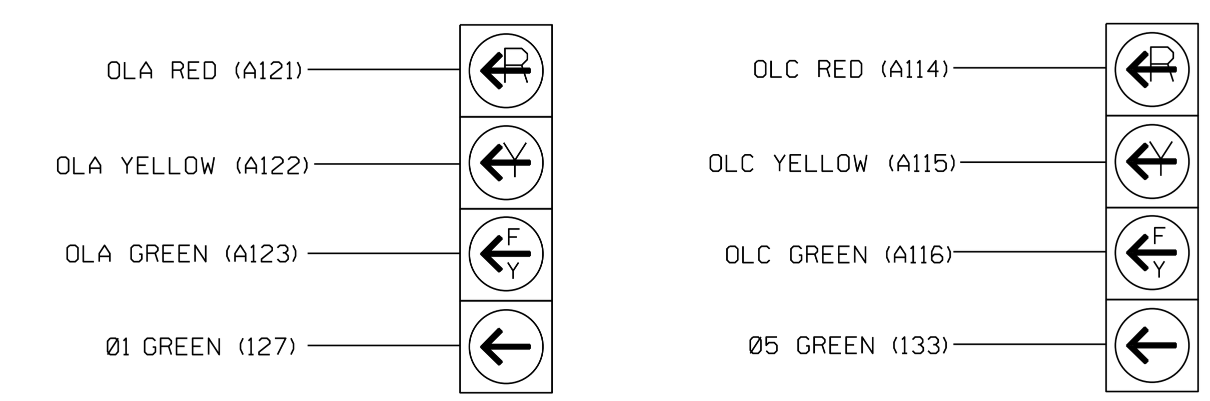

NOTE

1. The sequence display for this signal requires special logic programming. See sheet 2 of 2 for programming instructions.

INPUT FILE POSITION LAYOUT

(front view)

FILE		1	2	3	4	5	6	7	8	9	10	11	12	13	14
"I"	U	Ø 1 1A	Ø 1 1B	Ø 2 2A,2B	WIRED INPUT ⊗	SLOT EMPTY	Ø 4 4A	SLOT EMPTY	SLOT EMPTY	SYS. DET. S15	SLOT EMPTY	SLOT EMPTY	SLOT EMPTY	SLOT EMPTY	FS DC ISOLATOR
	L	NOT USED	NOT USED	NOT USED			Ø 4 4B			SYS. DET. S16					ST DC ISOLATOR
"J"	U	Ø 5 5A	SLOT EMPTY	Ø 6 6A,6B	WIRED INPUT ⊗	SLOT EMPTY	Ø 7 7A	Ø 8 8A	SLOT EMPTY	SYS. DET. S17	SLOT EMPTY	SLOT EMPTY	SLOT EMPTY	SLOT EMPTY	SLOT EMPTY
	L	NOT USED		NOT USED			Ø 7 7B	NOT USED		SYS. DET. S18					

EX.: 1A, 2A, ETC. = LOOP NO.'S

FS = FLASH SENSE
ST = STOP TIME

⊗ Wired Input - Do not populate slot with detector card

INPUT FILE CONNECTION & PROGRAMMING CHART

LOOP NO.	LOOP TERMINAL	INPUT FILE POS.	PIN NO.	INPUT ASSIGNMENT NO.	DETECTOR NO.	NEMA PHASE	CALL	EXTEND	FULL TIME DELAY	STRETCH TIME	DELAY TIME
1A[1]	TB2-1,2	I1U	56	18	1	1	Y	Y			15
	-	J4U	48	10	26	6	Y	Y			
1B	TB2-5,6	I2U	39	1	2	1	Y	Y			15
2A,2B	TB2-9,10	I3U	63	25	32	2	Y	Y			
4A	TB4-9,10	I6U	41	3	4	4	Y	Y			10
4B	TB4-11,12	I6L	45	7	14	4	Y	Y			15
✳ S15	TB6-9,10	I9U	60	22	11	SYS					
✳ S16	TB6-11,12	I9L	62	24	13	SYS					
5A[2]	TB3-1,2	J1U	55	17	5	5	Y	Y			15
	-	I4U	47	9	22	2	Y	Y			
6A,6B	TB3-9,10	J3U	64	26	36	6	Y	Y			
7A	TB5-9,10	J6U	42	4	8	7	Y	Y			3
7B	TB5-11,12	J6L	46	8	18	7	Y	Y			
8A	TB7-1,2	J7U	66	28	38	8	Y	Y			3
✳ S17	TB7-9,10	J9U	59	21	15	SYS					
✳ S18	TB7-11,12	J9L	61	23	17	SYS					

[1] Add jumper from I1-W to J4-W, on rear of input file.

[2] Add jumper from J1-W to I4-W, on rear of input file.

✳ System detector only. Remove the vehicle phase assigned to this detector in the default programming.

INPUT FILE POSITION LEGEND: J2L
FILE J
SLOT 2
LOWER

LOAD RESISTOR INSTALLATION DETAIL

(install resistors as shown below)

ACCEPTABLE VALUES

VALUE (ohms)	WATTAGE
1.5K - 1.9K	25W (min)
2.0K - 3.0K	10W (min)

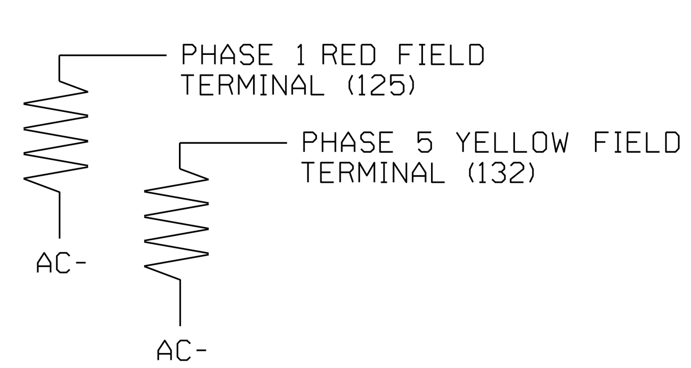

THIS ELECTRICAL DETAIL IS FOR
THE SIGNAL DESIGN: 06-0584
DESIGNED: Oct 2014
SEALED: 1/12/2015
REVISED: N/A

DYNAMIC BACK-UP CONTROL PROGRAMMING

(program controller as shown below)

1. From Main Menu press '2' (Phase Control), then '1' (Phase Control Functions). Scroll to the bottom of the menu and enable Dynamic/Backup Control Functions 1 and 2.
2. From Phase Control Functions Menu press '2' (Dynamic/Backup Control Functions).

```
 DYNAMIC/BACKUP CONTROL FUNCTION #01
                OVERLAPS:¦ABCDEFGHIJKLMNOP
IF OVERLAPS ARE ACTIVE ¦
OR          PHASES:¦12345678910111213141516
IF PHASES ARE ON¦        X
OMIT PHASES     ¦       X
CALL PHASES     ¦
```

BACKUP PROTECTION PROGRAMMING COMPLETE

vhb
Engineers | Scientists | Planners | Designers
4000 WestChase Boulevard, Suite 530 Raleigh, NC 27607
NC License No. C-3705

ELECTRICAL DETAIL SHEET 1 OF 2

ELECTRICAL AND PROGRAMMING DETAILS FOR:

Prepared for the Offices of: Transportation Mobility and Safety Division, State of North Carolina Department of Transportation, Signals Management Section
750 N.Greenfield Pkwy,Garner,NC 27529

NC 59 (N. Main Street) at SR 1115 (Golfview Road)

Division 6 Cumberland County Hope Mills

PLAN DATE: Oct 2014	REVIEWED BY: J.L. Lewis
PREPARED BY: D.J. Darity	VHB PROJECT NO.: 38286.01

REVISIONS	INIT.	DATE

SEAL
NORTH CAROLINA PROFESSIONAL ENGINEER SEAL 19713 DONALD J. DARITY
DocuSigned by: Don Darity C80D150DC9834FE... 1/12/2015 DATE

SIG. INVENTORY NO. 06-0584

PROJECT REFERENCE NO.	SHEET NO.
W-5206AA	Sig.3.2

LOGICAL I/O PROCESSOR PROGRAMMING DETAIL
TO PRODUCE SPECIAL FYA-PPLT SIGNAL SEQUENCE

(program controller as shown below)

1. FROM MAIN MENU PRESS '2' (PHASE CONTROL), THEN '1' (PHASE CONTROL FUNCTIONS). SCROLL TO THE BOTTOM OF THE MENU AND ENABLE ACT LOGIC COMMANDS 1, 2, 3, 4, 5 AND 6.

2. FROM MAIN MENU PRESS '6' (OUTPUTS), THEN '3' (LOGICAL I/O PROCESSOR).

```
LOGICAL I/O COMMAND #1  (+/-COMMAND#)
IF  ACTIVE PHASE       #1  IS ON
AND RED CLEAR ON PHASE #1  IS ON

SCROLL DOWN

THEN:
SET OUTPUT  ASSIGNMENT #50 ON
SET OUTPUT  ASSIGNMENT #51 OFF
```

NOTE: LOGIC FOR PHASE 1 RED CLEAR WHEN TRANSITIONING FROM PHASE 1 TO PHASE 2 (HEAD 11).

PRESS '+'

```
LOGICAL I/O COMMAND #2  (+/-COMMAND#)
IF  ACTIVE PHASE       #1  IS ON

SCROLL DOWN

THEN:
SET OUTPUT  ASSIGNMENT #52 OFF
```

NOTE: LOGIC FOR SWITCHING FLASHING YELLOW ARROW "OFF" DURING PHASE 1 (HEAD 11).

PRESS '+'

```
LOGICAL I/O COMMAND #3  (+/-COMMAND#)
IF  YELLOW ON PHASE    #1  IS ON

SCROLL DOWN

THEN:
SET OUTPUT  ASSIGNMENT #51 ON
```

NOTE: LOGIC FOR YELLOW ARROW CLEARANCE FROM PHASE 1 (HEAD 11).

PRESS '+'

```
LOGICAL I/O COMMAND #4  (+/-COMMAND#)
IF  ACTIVE PHASE       #5  IS ON
AND RED CLEAR ON PHASE #5  IS ON

SCROLL DOWN

THEN:
SET OUTPUT  ASSIGNMENT #42 ON
SET OUTPUT  ASSIGNMENT #43 OFF
```

NOTE: LOGIC FOR PHASE 5 RED CLEAR WHEN TRANSITIONING FROM PHASE 5 TO PHASE 6 (HEAD 51).

PRESS '+'

```
LOGICAL I/O COMMAND #5  (+/-COMMAND#)
IF  ACTIVE PHASE       #5  IS ON

SCROLL DOWN

THEN:
SET OUTPUT  ASSIGNMENT #44 OFF
```

NOTE: LOGIC FOR SWITCHING FLASHING YELLOW ARROW "OFF" DURING PHASE 5 (HEAD 51).

PRESS '+'

```
LOGICAL I/O COMMAND #6  (+/-COMMAND#)
IF  YELLOW ON PHASE    #5  IS ON

SCROLL DOWN

THEN:
SET OUTPUT  ASSIGNMENT #43 ON
```

NOTE: LOGIC FOR YELLOW ARROW CLEARANCE FROM PHASE 5 (HEAD 51).

LOGIC I/O PROCESSOR PROGRAMMING COMPLETE

OUTPUT REFERENCE SCHEDULE

OUTPUT 42 = Overlap C Red
OUTPUT 43 = Overlap C Yellow
OUTPUT 44 = Overlap C Green
OUTPUT 50 = Overlap A Red
OUTPUT 51 = Overlap A Yellow
OUTPUT 52 = Overlap A Green

OVERLAP PROGRAMMING DETAIL

(program controller as shown below)

FROM MAIN MENU PRESS '8' (OVERLAPS), THEN '1' (VEHICLE OVERLAP SETTINGS).

```
PAGE 1: VEHICLE OVERLAP 'A' SETTINGS
PHASE:              |123456789101112131415 16
VEH OVL PARENTS:    |XX
VEH OVL NOT VEH:    |
VEH OVL NOT PED:    |
VEH OVL GRN EXT:    |
STARTUP COLOR: _ RED  _ YELLOW  _ GREEN
FLASH COLORS:  _ RED  _ YELLOW  X GREEN
SELECT VEHICLE OVERLAP OPTIONS:   (Y/N)
FLASH YELLOW IN CONTROLLER FLASH?...Y
GREEN EXTENSION (0-255 SEC).........0
YELLOW CLEAR (0=PARENT,3-25.5 SEC)..0.0
RED CLEAR (0=PARENT,0.1-25.5 SEC)...0.0
OUTPUT AS PHASE # (0=NONE, 1-16)....0
```

NOTICE GREEN FLASH

PRESS '+' TWICE

```
PAGE 1: VEHICLE OVERLAP 'C' SETTINGS
PHASE:              |123456789101112131415 16
VEH OVL PARENTS:    |    XX
VEH OVL NOT VEH:    |
VEH OVL NOT PED:    |
VEH OVL GRN EXT:    |
STARTUP COLOR: _ RED  _ YELLOW  _ GREEN
FLASH COLORS:  _ RED  _ YELLOW  X GREEN
SELECT VEHICLE OVERLAP OPTIONS:   (Y/N)
FLASH YELLOW IN CONTROLLER FLASH?...Y
GREEN EXTENSION (0-255 SEC).........0
YELLOW CLEAR (0=PARENT,3-25.5 SEC)..0.0
RED CLEAR (0=PARENT,0.1-25.5 SEC)...0.0
OUTPUT AS PHASE # (0=NONE, 1-16)....0
```

NOTICE GREEN FLASH

OVERLAP PROGRAMMING COMPLETE

THIS ELECTRICAL DETAIL IS FOR
THE SIGNAL DESIGN: 06-0584
DESIGNED: Oct 2014
SEALED: 1/12/2015
REVISED: N/A

ELECTRICAL DETAIL SHEET 2 OF 2

vhb
Engineers | Scientists | Planners | Designers
4000 WestChase Boulevard, Suite 530 Raleigh, NC 27607
NC License No. C-3705

ELECTRICAL AND PROGRAMMING DETAILS FOR:

Prepared for the Offices of:
Transportation Mobility and Safety Division
STATE OF NORTH CAROLINA DEPARTMENT OF TRANSPORTATION
Signal Management Section
750 N.Greenfield Pkwy,Garner,NC 27529

NC 59 (N. Main Street)
at
SR 1115 (Golfview Road)

Division 6 | Cumberland County | Hope Mills

PLAN DATE:	Oct 2014	REVIEWED BY:	J.L. Lewis
PREPARED BY:	D.J. Darity	VHB PROJECT NO.:	38286.01

REVISIONS	INIT.	DATE

SEAL
NORTH CAROLINA PROFESSIONAL SEAL 19713 ENGINEER DONALD J. DARITY

DocuSigned by: Don Darity
C80D150DC9834FE...
1/12/2015
DATE

SIG. INVENTORY NO. 06-0584

$$$$$$SYSTIME$$$$$
$$$$$$SYSTODAY$$$$$
$$$$USERNAME$$$$

PROJECT REFERENCE NO.	SHEET NO.
W-5206AA	Sig.4.0

PHASING DIAGRAM

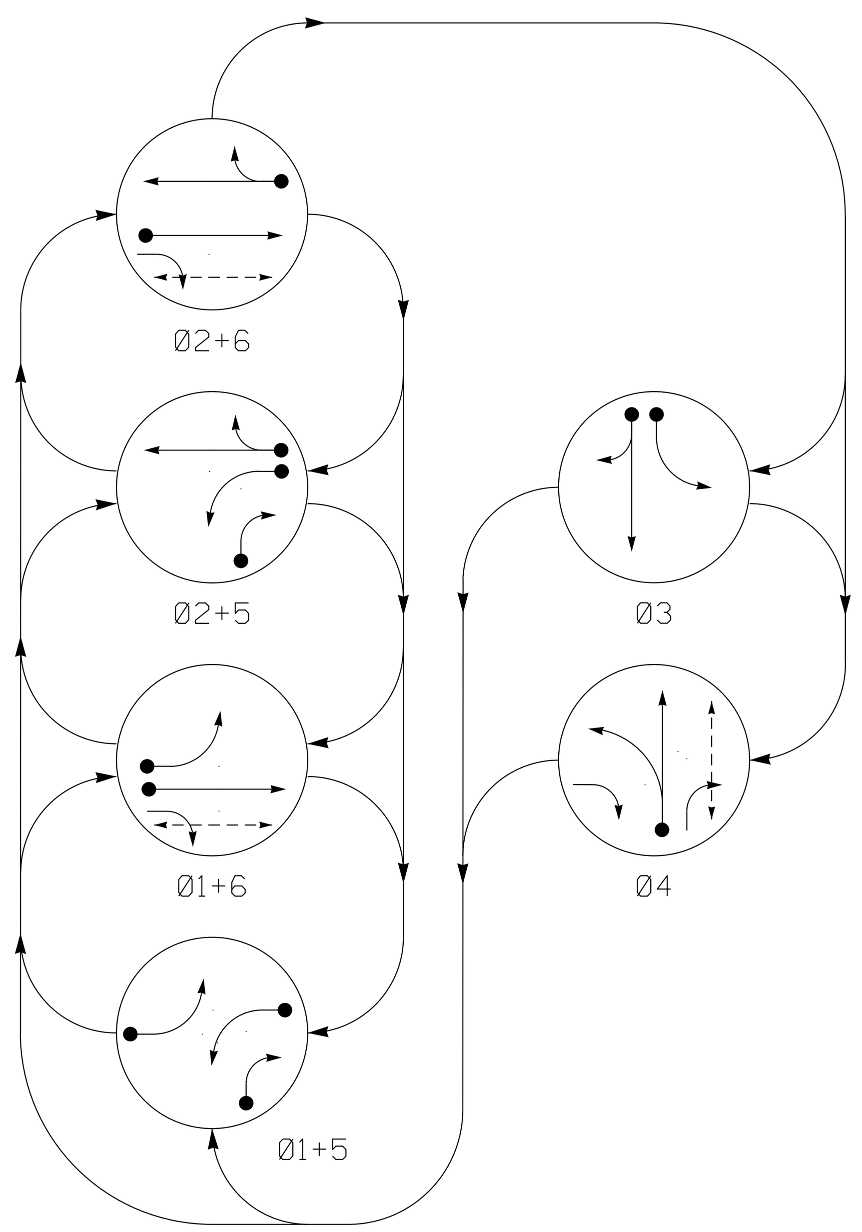

PHASING DIAGRAM DETECTION LEGEND

- DETECTED MOVEMENT
- UNDETECTED MOVEMENT (OVERLAP)
- UNSIGNALIZED MOVEMENT
- PEDESTRIAN MOVEMENT

TABLE OF OPERATION

SIGNAL FACE	PHASE Ø1+5	Ø1+6	Ø2+5	Ø2+6	Ø3	Ø4	FLASH
11	←	←	←R	←R	←R	←R	←R
21, 22	R	R	G	G	R	R	Y
31	R	R	R	R	G←	R	R
32	R	R	R	R	G	R	R
41	R	R	R	R	R	G←	R
42	R/→	R	R/→	R	R	G	R
51	←	←R	←	←R	←R	←R	←R
61	R	G	R	G	R	R	Y
62	R	G	R	G	R	R/→	Y
P41, P42	DW	DW	DW	DW	DW	W	DRK
P61, P62	DW	W	DW	W	DW	DW	DRK

SIGNAL FACE I.D.

All Heads L.E.D.

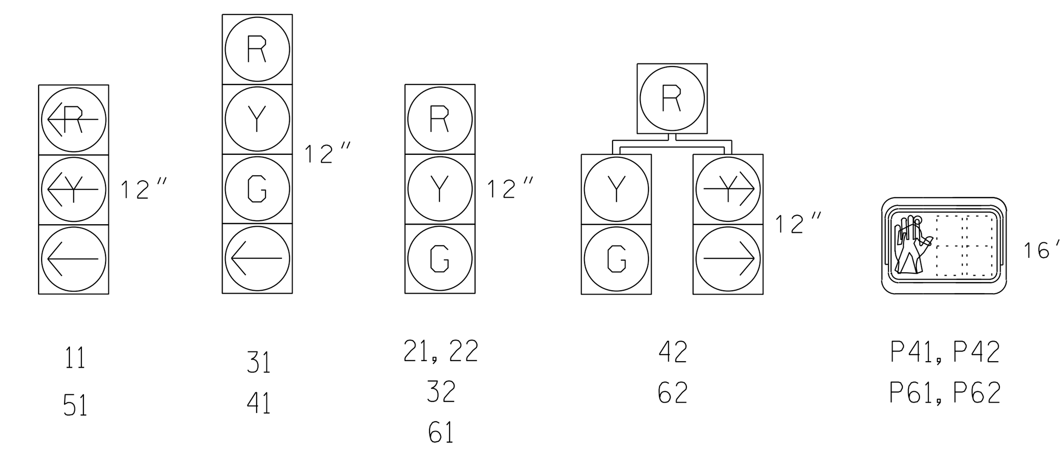

OASIS 2070 LOOP & DETECTOR INSTALLATION CHART

INDUCTIVE LOOPS: LOOP	SIZE (FT)	DISTANCE FROM STOPBAR (FT)	TURNS	NEW LOOP	DETECTOR PROGRAMMING: PHASE	CALLING	EXTENSION	FULL TIME DELAY	STRETCH TIME	DELAY TIME	SYSTEM LOOP	NEW CARD
1A	6X40	+5	2-4-2	Y	1	Y	Y	-	-	-	-	-
2A	6X6	70	4	Y	2	Y	Y	-	-	-	-	-
3A	6X40	0	2-4-2	Y	3	Y	Y	-	-	10	-	-
3B	6X40	0	2-4-2	Y	3	Y	Y	-	-	3	-	Y
4A	6X40	0	2-4-2	Y	4	Y	Y	-	-	3	-	-
5A	6X40	0	2-4-2	Y	5	Y	Y	-	-	3	-	-
5B	6X40	0	2-4-2	Y	5	Y	Y	-	-	15	-	-
6A	6X6	70	4	Y	6	Y	Y	-	-	-	-	-

6 Phase
Fully Actuated
NC 59 (Hope Mills Rd)/NC 162 (Hope Mills Byp) CLS

NOTES

1. Refer to "Roadway Standard Drawings NCDOT" dated January 2012 and "Standard Specifications for Roads and Structures" dated January 2012.
2. Do not program signal for late night flashing operation unless otherwise directed by the Engineer.
3. Phase 1 and/or phase 5 may be lagged.
4. The order of phase 3 and phase 4 may be reversed.
5. Reposition existing signal heads numbered 31 and 32.
6. Set all detector units to presence mode.
7. Omit "WALK" and flashing "DON'T WALK" with no pedestrian calls.
8. Program pedestrian heads to count-down the flashing "Don't Walk" time only.
9. Maximum times shown in timing chart are for free-run operation only. Coordinated signal system timing values supersede these values.
10. Closed Loop System Data: Controller Asset No.: 0363

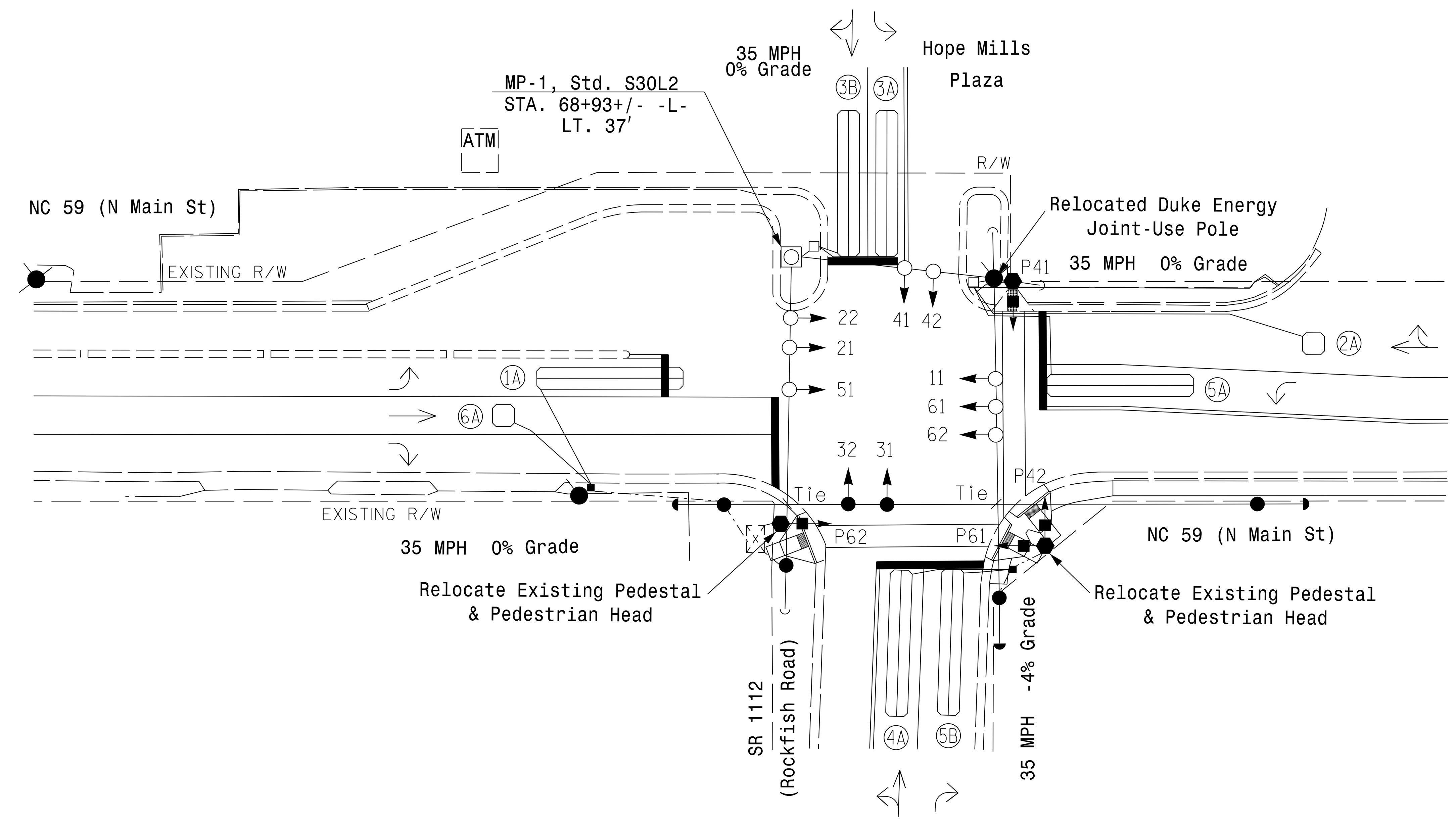

OASIS 2070 TIMING CHART

FEATURE	PHASE 1	2	3	4	5	6
Min Green 1 *	7	10	7	7	7	10
Extension 1	2.0	3.0	2.0	2.0	2.0	3.0
Max Green 1 *	30	75	20	25	25	75
Yellow Clearance	3.0	3.8	3.8	4.1	3.0	3.8
Red Clearance	2.6	1.2	1.5	1.4	2.3	1.3
Walk 1 *	-	-	-	7	-	7
Don't Walk 1	-	-	-	14	-	12
Seconds Per Actuation *	-	-	-	-	-	-
Max Variable Initial *	-	-	-	-	-	-
Time Before Reduction *	-	-	-	-	-	-
Time To Reduce *	-	-	-	-	-	-
Minimum Gap	-	-	-	-	-	-
Recall Mode	-	MIN RECALL	-	-	-	MIN RECALL
Vehicle Call Memory	-	YELLOW	-	-	-	YELLOW
Dual Entry	-	-	-	-	-	-
Simultaneous Gap	ON	ON	ON	ON	ON	ON

* These values may be field adjusted. Do not adjust Min Green and Extension times for phases 2 and 6 lower than what is shown. Min Green for all other phases should not be lower than 4 seconds.

METAL POLE & STOP BAR LOCATION DIAGRAM

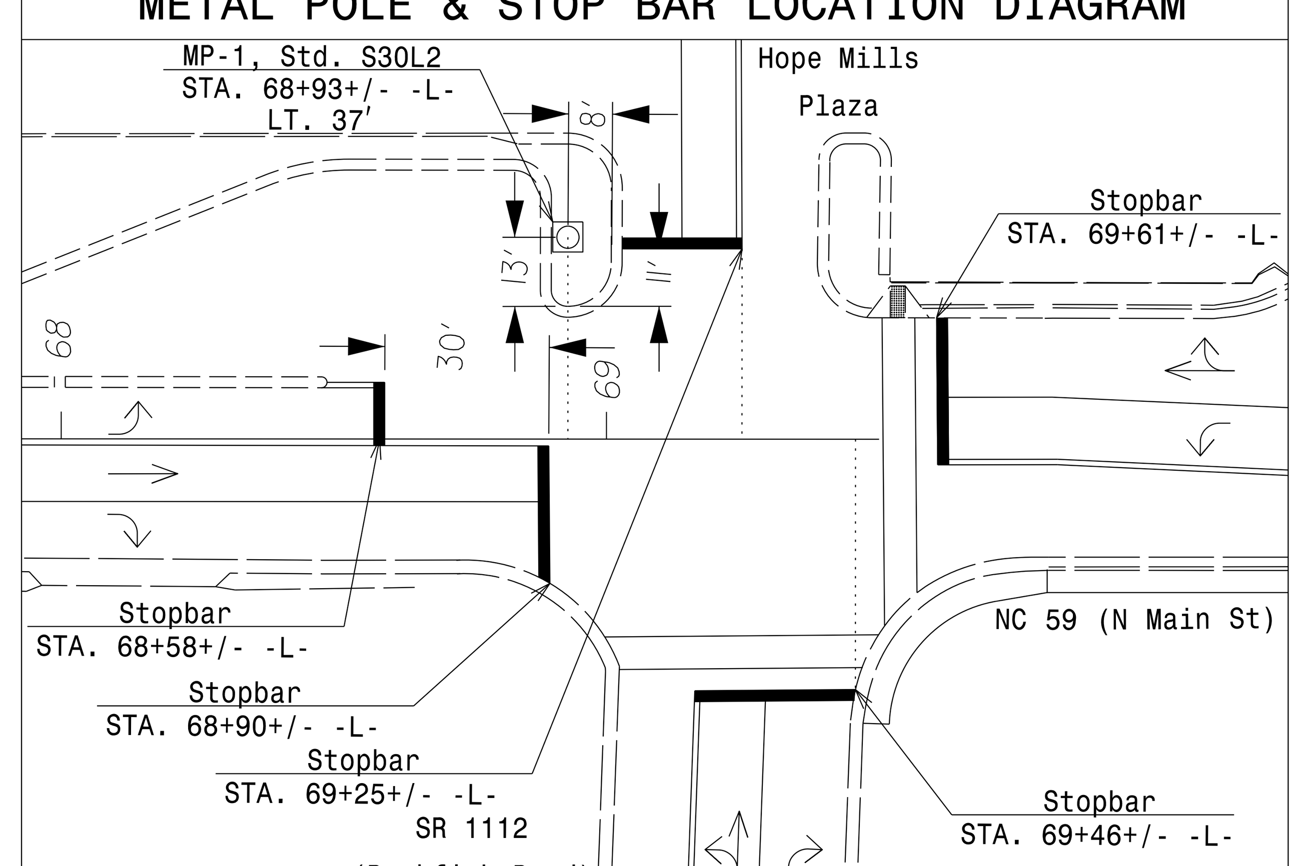

This signal design supersedes the originally issued and sealed plan dated 1-12-2015.

LEGEND

PROPOSED		EXISTING
	Traffic Signal Head	
	Modified Signal Head	N/A
	Sign	
	Pedestrian Signal Head With Push Button & Sign	
	Signal Pole with Guy	
	Signal Pole with Sidewalk Guy	
	Metal Strain Pole	
	Inductive Loop Detector	
	Controller & Cabinet	
	Junction Box	
	2-in Underground Conduit	
N/A	Curb Ramp	
	Right of Way	
	Directional Arrow	
	Stop Bar	
	Type II Pedestal	

Signal Upgrade

vhb
4000 WestChase Boulevard, Suite 530
Raleigh, NC 27607
NC License No. C-3705

Prepared for the Offices of:
Transportation Mobility and Safety Division
Signal Design Section
750 N.Greenfield Pkwy,Garner,NC 27529

SCALE 0 30 1"=30'

NC 59 (N. Main Street) at SR 1112 (Rockfish Road/ Hope Mills Plaza

Division 6 Cumberland County Hope Mills

PLAN DATE:	Oct 2014	REVIEWED BY:	J.L. Lewis
PREPARED BY:	D.J. Darity	VHB PROJECT NO.:	38286.01

REVISIONS	INIT.	DATE

SEAL
NORTH CAROLINA PROFESSIONAL
SEAL 19713
ENGINEER
DONALD J. DARITY

SIG. INVENTORY NO. 06-0363

$$$$$$SYSTIME$$$$$
$$$$$$$$$$$$$$$DGN$$$$$$$$$$$$$$$$$
$$$$USERNAME$$$$

PROJECT REFERENCE NO.	SHEET NO.
W-5206AA	Sig.4.1

EDI MODEL 2010ECL CONFLICT MONITOR PROGRAMMING DETAIL

(remove jumpers and set switches as shown)

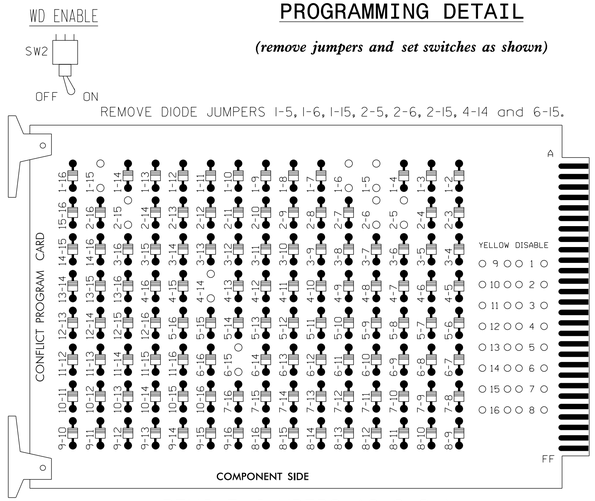

REMOVE JUMPERS AS SHOWN

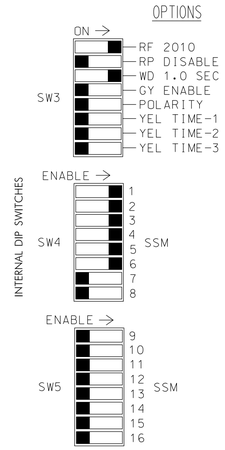

■ = DENOTES POSITION OF SWITCH

NOTES:

1. Card is provided with all Diode Jumpers in place. Removal of any jumper allows its channels to run concurrently.
2. Make sure jumpers SEL2-SEL5 are present on the Monitor Board.
3. Make sure switches YEL TIME-1, YEL TIME-2, and YEL TIME-3 are in the OFF position.

NOTES

1. To prevent "Flash Conflict" problems, insert red flash program blocks for all unused vehicle load switches in the output file. The installer shall verify that signal heads flash in accordance with the signal plans.
2. Ensure that red enable is active at all tiomes during normal operation. To prevent red failures on unused monitor channels, tie unused red monitor inputs 7,8, 9,10,11,12,13,14,15 & 16 to load switch AC+ per the cabinet manufacturer's instructions.
3. Program controller to start up in phases 2 and 6 green.
4. Enable simultaneous gap-out feature for all phases.
5. Program phases 4 and 6 for 'STARTUP PED CALL'.
6. The cabinet and controller are part of the NC 59 (Hope Mills)/NC 162 (Hope Mills Byp) CLS.

EQUIPMENT INFORMATION

CONTROLLER.....2070
CABINET 332
SOFTWARE .....ECONOLITE OASIS
CABINET MOUNT.....BASE
OUTPUT FILE POSITIONS...12
LOAD SWITCHES USED.....S1,S2,S3,S4,S4P,S5,S6,S6P
PHASES USED.....1,2,3,4,4PED,5,6,6PED
OVERLAPS.....NONE

SIGNAL HEAD HOOK-UP CHART

LOAD SWITCH NO.	S1	S2	S2P	S3		S4			S4P	S5		S6	S6P	S7	S8	S8P
PHASE	1	2	2 PED	3		4			4 PED	5		6	6 PED	7	8	8 PED
SIGNAL HEAD NO.	11	21,22	NU	31	32	41	42	62	P41, P42	42	51	61,62	P61, P62	NU	NU	NU
RED		128		116	116	101	101					134				
YELLOW		129		117	117	102	102					135				
GREEN		130		118	118	103	103					136				
RED ARROW	125										131					
YELLOW ARROW	126							102		132	132					
GREEN ARROW	127			118		103		103		133	133					
✋									104				119			
🚶									106				121			

NU = NOT USED

INPUT FILE POSITION LAYOUT

(front view)

		1	2	3	4	5	6	7	8	9	10	11	12	13	14
FILE "I"	U	Ø 1 1A	Ø 2 2A	SLOT EMPTY	SLOT EMPTY	Ø 3 3A	Ø 4 4A	Ø 3 3B	SLOT EMPTY	SLOT EMPTY	SLOT EMPTY	SLOT EMPTY	NOT USED	Ø6 PED DC ISOLATOR	FS DC ISOLATOR
	L	NOT USED	NOT USED			NOT USED	NOT USED	NOT USED					Ø4 PED DC ISOLATOR	NOT USED	ST DC ISOLATOR
FILE "J"	U	SLOT EMPTY	Ø 5 5A	Ø 6 6A	SLOT EMPTY	SLOT EMPTY	SLOT EMPTY	SLOT EMPTY	SLOT EMPTY	SLOT EMPTY	SLOT EMPTY	SLOT EMPTY	SLOT EMPTY	SLOT EMPTY	SLOT EMPTY
	L		Ø 5 5B	NOT USED											

EX.: 1A, 2A, ETC. = LOOP NO.'S

FS = FLASH SENSE
ST = STOP TIME

INPUT FILE CONNECTION & PROGRAMMING CHART

LOOP NO.	LOOP TERMINAL	INPUT FILE POS.	PIN NO.	INPUT ASSIGNMENT NO.	DETECTOR NO.	NEMA PHASE	CALL	EXTEND	FULL TIME DELAY	STRETCH TIME	DELAY TIME
1A	TB2-1,2	I1U	56	18	1	1	Y	Y			
2A	TB2-5,6	I2U	39	1	2	2	Y	Y			
3A	TB4-5,6	I5U	58	20	3	3	Y	Y			10
3B	TB6-1,2	I7U	65	27	34	3	Y	Y			3
4A	TB4-9,10	I6U	41	3	4	4	Y	Y			3
5A	TB3-5,6	J2U	40	2	6	5	Y	Y			3
5B	TB3-7,8	J2L	44	6	16	5	Y	Y			15
6A	TB3-9,10	J3U	64	26	36	6	Y	Y			
PED PUSH BUTTONS											
P41,P42	TB8-5,6	I12L	69	31	PED 4	4 PED					
P61,P62	TB8-7,9	I13U	68	30	PED 6	6 PED					

NOTE:
Install DC Isolators in Input File Slots I12 and I13.

INPUT FILE POSITION LEGEND: J2L
FILE J
SLOT 2
LOWER

COUNTDOWN PEDESTRIAN SIGNAL OPERATION

Countdown Ped Signals are required to display timing only during Ped Clearance Interval. Consult Ped Signal Module user's manual for instructions on selecting this feature.

This signal design supersedes the originally issued and sealed plan dated 1-12-2015.

THIS ELECTRICAL DETAIL IS FOR
THE SIGNAL DESIGN: 06-0363
DESIGNED: Oct 2014
ORIGINALLY SEALED: 1-12-2015
REVISED: 3-3-2015

vhb
4000 WestChase Boulevard, Suite 530
Raleigh, NC 27607
NC License No. C-3705

Signal Upgrade

ELECTRICAL AND PROGRAMMING DETAILS FOR:

Prepared for the Offices of:
Transportation Mobility and Safety Division
STATE OF NORTH CAROLINA
DEPARTMENT OF TRANSPORTATION
Signals Management Section
750 N.Greenfield Pkwy,Garner,NC 27529

NC 59 (N. Main Street) at SR 1112 (Rockfish Road)/ Hope Mills Plaza

Division 6 | Cumberland County | Hope Mills

PLAN DATE:	Oct 2014	REVIEWED BY:	J.L. Lewis
PREPARED BY:	D.J. Darity	VHB PROJECT NO.:	38286.01

REVISIONS	INIT.	DATE

SEAL
NORTH CAROLINA PROFESSIONAL SEAL 19713 ENGINEER DONALD J. DARITY

SIG. INVENTORY NO. 06-0363

$$$$$$$$$$TIME$$$$$$
$$$$$$$$$$DATE$$$$$$
$$$$$$$$$$SUBDIR$$$$$$
$$$$USERNAME$$$$

PROJECT NO.	SHEET NO.
W-5206AA	Sig. M1

STATE OF NORTH CAROLINA
DIVISION OF HIGHWAYS

STANDARD DRAWINGS FOR METAL POLES

NCDOT METAL POLE STANDARDS

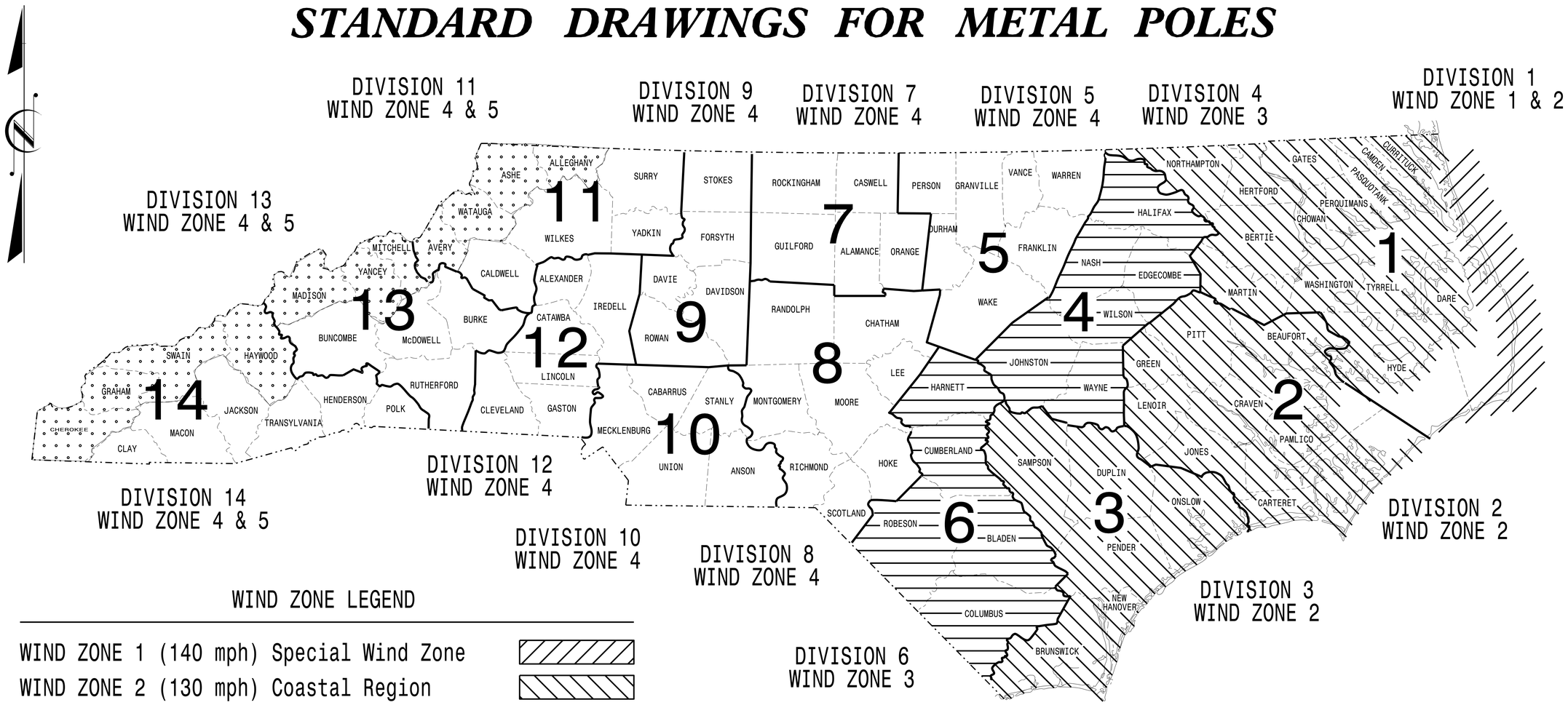

WIND ZONE LEGEND

- WIND ZONE 1 (140 mph) Special Wind Zone
- WIND ZONE 2 (130 mph) Coastal Region
- WIND ZONE 3 (110 mph) Eastern Region
- WIND ZONE 4 (90 mph) Central & Mtn. Region
- WIND ZONE 5 (120 mph) Special Wind Zone

https://connect.ncdot.gov/resources/safety/Pages/ITS-Design-Resources.aspx

Prepared in the Offices of:

Transportation Mobility and Safety Division
Signal Design Section
STATE OF NORTH CAROLINA DEPARTMENT OF TRANSPORTATION

750 N.Greenfield Pkwy.Garner,NC 27529

Designed in conformance with the latest 2012 Interim to the 5th Edition 2009

AASHTO

Standard Specifications for Structural Supports for Highway Signs, Luminares, and Traffic Signals

INDEX OF PLANS

DRAWING NUMBER	DESCRIPTION
M 1	Title Sheet
M 2	Fabrication Details – All Poles
M 3	Fabrication Details – Strain Poles
M 4,5	Fabrication Details – Mast Arm Poles
M 6	Construction Details – Strain Poles
M 7	Construction Details – Foundations
M 8,9	Standard Strain Pole Foundations

NCDOT CONTACTS:

MOBILITY AND SAFETY DIVISION – ITS AND SIGNALS UNIT

G. A. FULLER, P.E. – STATE ITS AND SIGNALS ENGNEER

G. G. MURR, JR., P.E. – STATE SIGNALS ENGINEER

D.C. SARKAR, P.E. – ITS AND SIGNALS SENIOR STRUCTURAL ENGINEER

C.F. ANDREWS – ITS AND SIGNALS JOURNEY STRUCTURAL ENGINEER

SEAL

NORTH CAROLINA PROFESSIONAL SEAL 028094 ENGINEER DEBESH C. SARKAR

DocuSigned by: Debesh C. Sarkar 44E8E32E147E4C4...

8/26/2014

DATE

PROJECT REFERENCE NO.	SHEET NO.
W-5206AA	Sig. M2

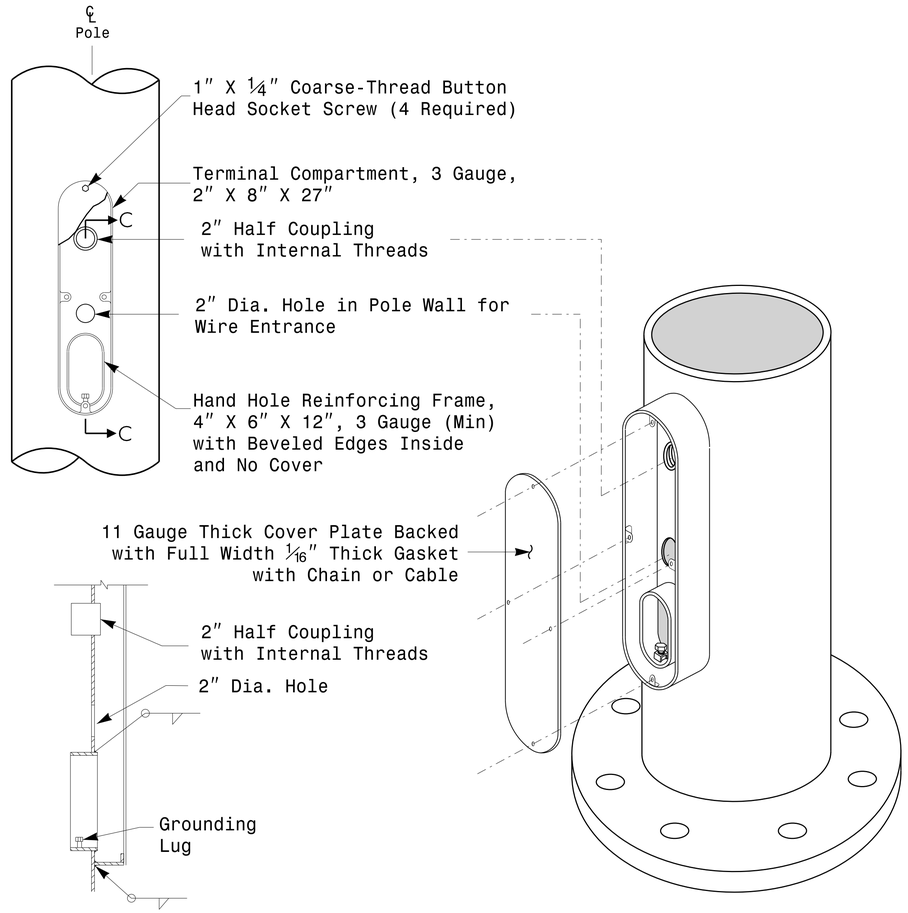

Note: Unless otherwise specified, locate Terminal Compartment 1 foot above the pole base plate at 180 degrees on the pole's radial index.

Terminal Compartment Detail

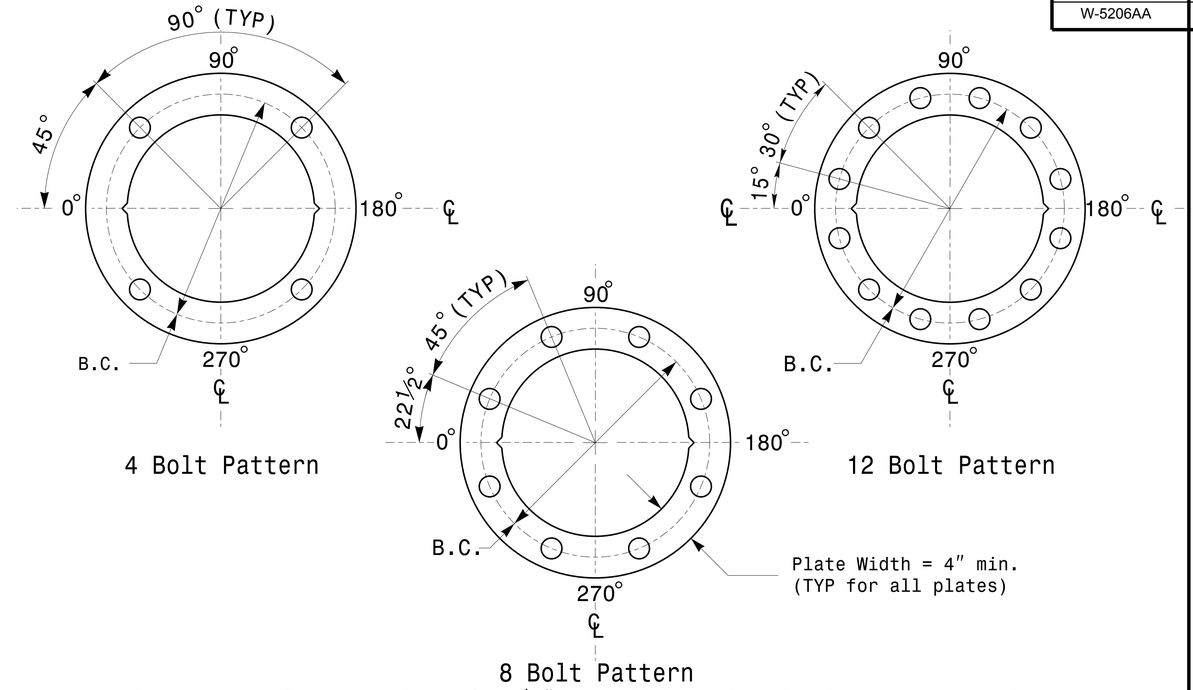

Construct Templates and Plates from ¼″ min. thick Steel. Galvanizing is not required.

Base Plate Template and Anchor Bolt Lock Plate Details

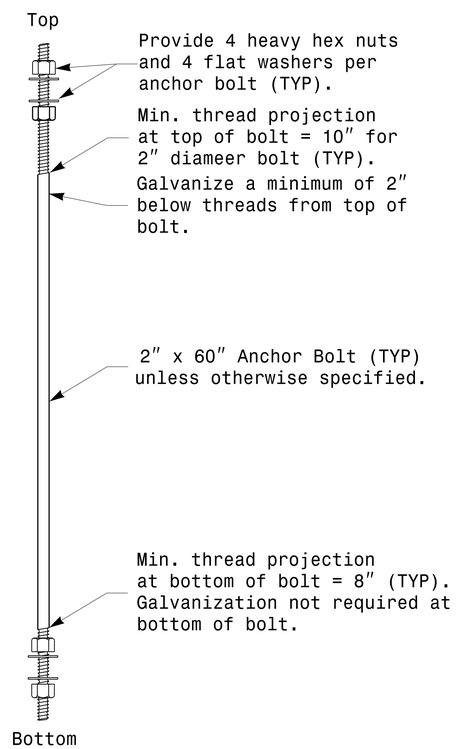

Anchor Bolt Detail

Note: See Strain Pole drawing M3 and Mast arm drawing M4 for base plate weld details.

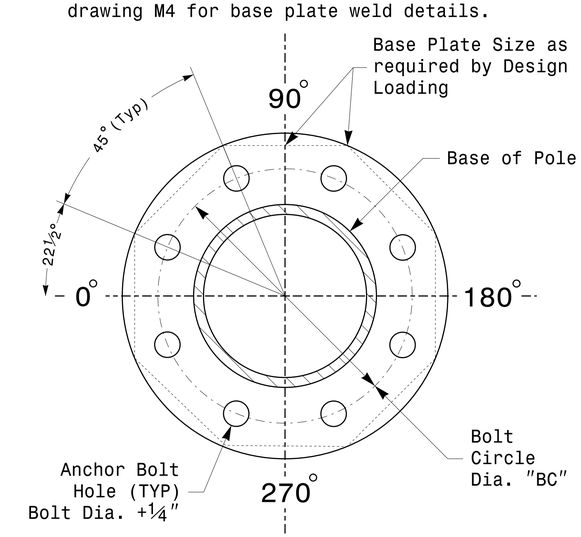

8 Bolt Base Plate Detail

MFG _____ MFG. DATE: MM/YY
SHAFT D/T/L/Y ----/----/----/----
ARM-A D/T/L/Y ----/----/----/----
----/----/----/----
ARM-B D/T/L/Y ----/----/----/----
----/----/----/----
A.B. DIA./B.C./L/Y ----/----/----/----
NCDOT STANDARD ----------

Shaft I.D. Tag
(Provide on Strain Poles and Mast Arm Poles)

MFG _____ MFG. DATE: MM/YY
SECTION D/T/L/Y ----/----/----/----
NCDOT STANDARD ----------

Arm I.D. Tag
(Provide on each section of a multi-section mast arm)

Notes:
1) D= Diameter, T= Thickness, L= Length, Y= Yield Strength
2) A.B. = Anchor Bolt
3) B.C. = Bolt Circle of Anchor Bolts
4) If Custom Design, use "NCDOT STANDARD" line for pole I.D. number and Signal Inv. Number.
5) See drawing M4 for mounting positions of I.D. tags.

Identification Tag Details

Fabrication Details – All Poles

Prepared in the Offices of:
Transportation Mobility and Safety Division
Signal Design Section
750 N.Greenfield Pkwy,Garner,NC 27529

Typical Fabrication Details Common To All Metal Poles

PLAN DATE:	AUGUST 2013	DESIGNED BY:	C.F. ANDREWS
PREPARED BY:	N. BITTING	REVIEWED BY:	D.C. SARKAR

SCALE 0 NA NONE

REVISIONS	INIT.	DATE

SEAL NORTH CAROLINA PROFESSIONAL SEAL 028094 ENGINEER DEBESH C. SARKAR

DocuSigned by: Debesh C. Sarkar 44EBE32E147E4C4... 8/26/2014 DATE

SIG. INVENTORY NO.

26-AUG-2014 09:55
S:\PTS\SDW\TIS\Signals\Signal Design Section\Eastern Region\M Sheets\2012_M2_Fab Details All Poles.dgn
jgalloway

PROJECT REFERENCE NO.	SHEET NO.
W-5206AA	Sig. M3

Fabrication Details – Strain Poles

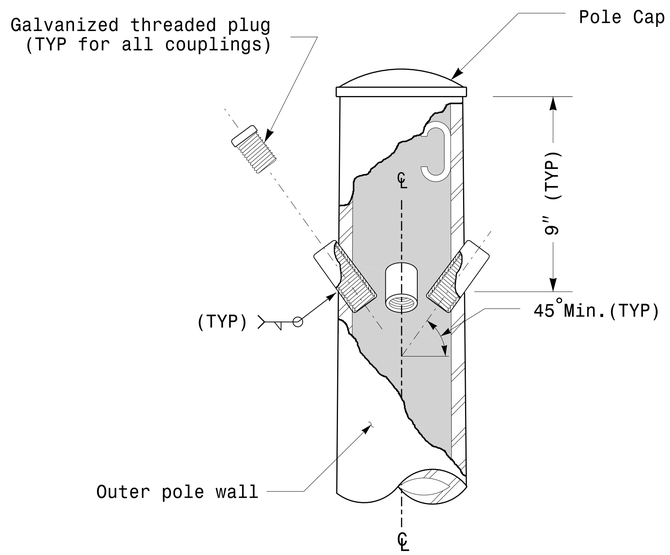

Cable Entrances at Top of Pole

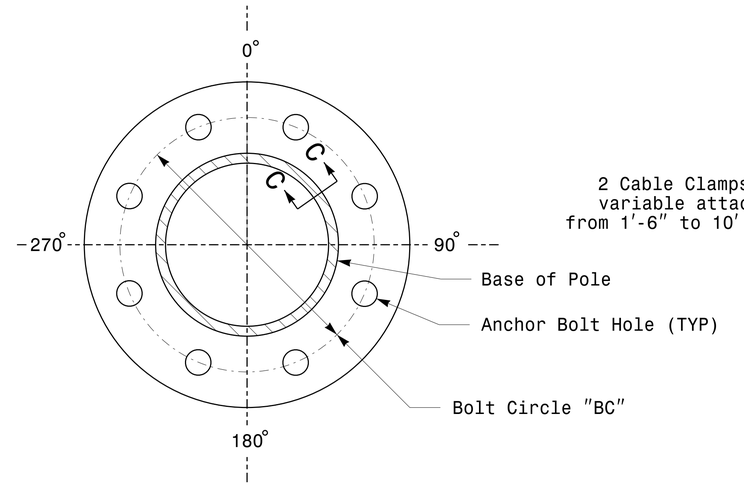

Section B-B

(See drawing M2)

Pole Base Plate

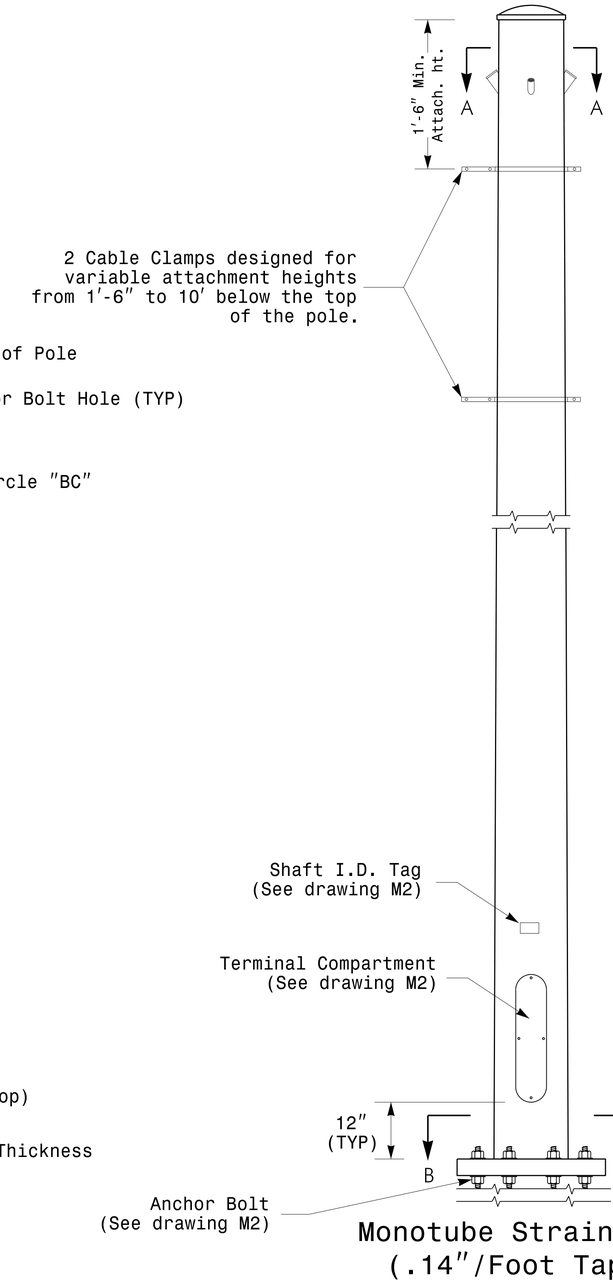

Monotube Strain Pole
(.14″/Foot Taper)

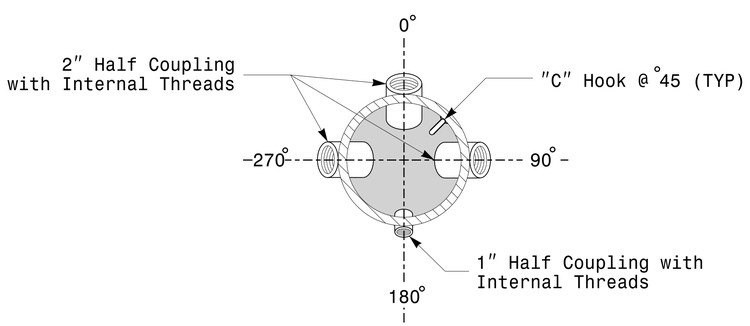

Section A-A

Radial Orientation for Factory Installed Accessories at Top of Pole

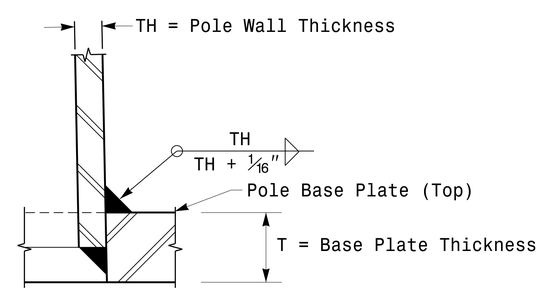

Section C-C

Socket Connection Weld Detail

Prepared in the Offices of:
Transportation Mobility and Safety Division
Signal Design Section
750 N.Greenfield Pkwy.Garner,NC 27529

Typical Fabrication Details
For Strain Poles

PLAN DATE:	AUGUST 2013	DESIGNED BY:	C.F. ANDREWS
PREPARED BY:	N. BITTING	REVIEWED BY:	D.C. SARKAR

SCALE 0 NA NONE

REVISIONS	INIT.	DATE

SEAL
NORTH CAROLINA PROFESSIONAL SEAL 028094 ENGINEER DEBESH C. SARKAR

DocuSigned by: Debesh C. Sarkar 44EBE3E147E4C4... 8/26/2014
DATE

SIG. INVENTORY NO.

26-AUG-2014 08:51
S:\TSG\ITS\Signals\Signal Design Section\Eastern Region\M Sheets\2012.M3.Fab Details Strain Poles.dgn
jgallaway

PROJECT REFERENCE NO.	SHEET NO.
W-5206AA	Sig. M4

Fabrication Details – Mast Arm Poles

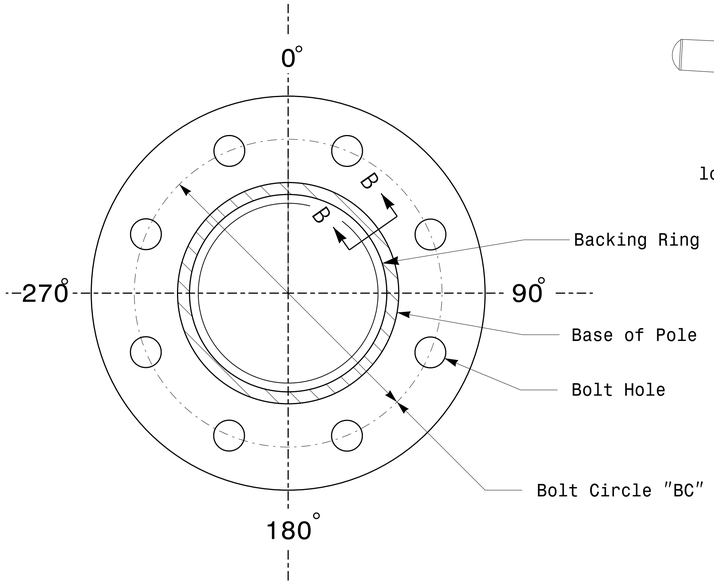

Section A-A

(See drawing M 2)

Pole Base Plate

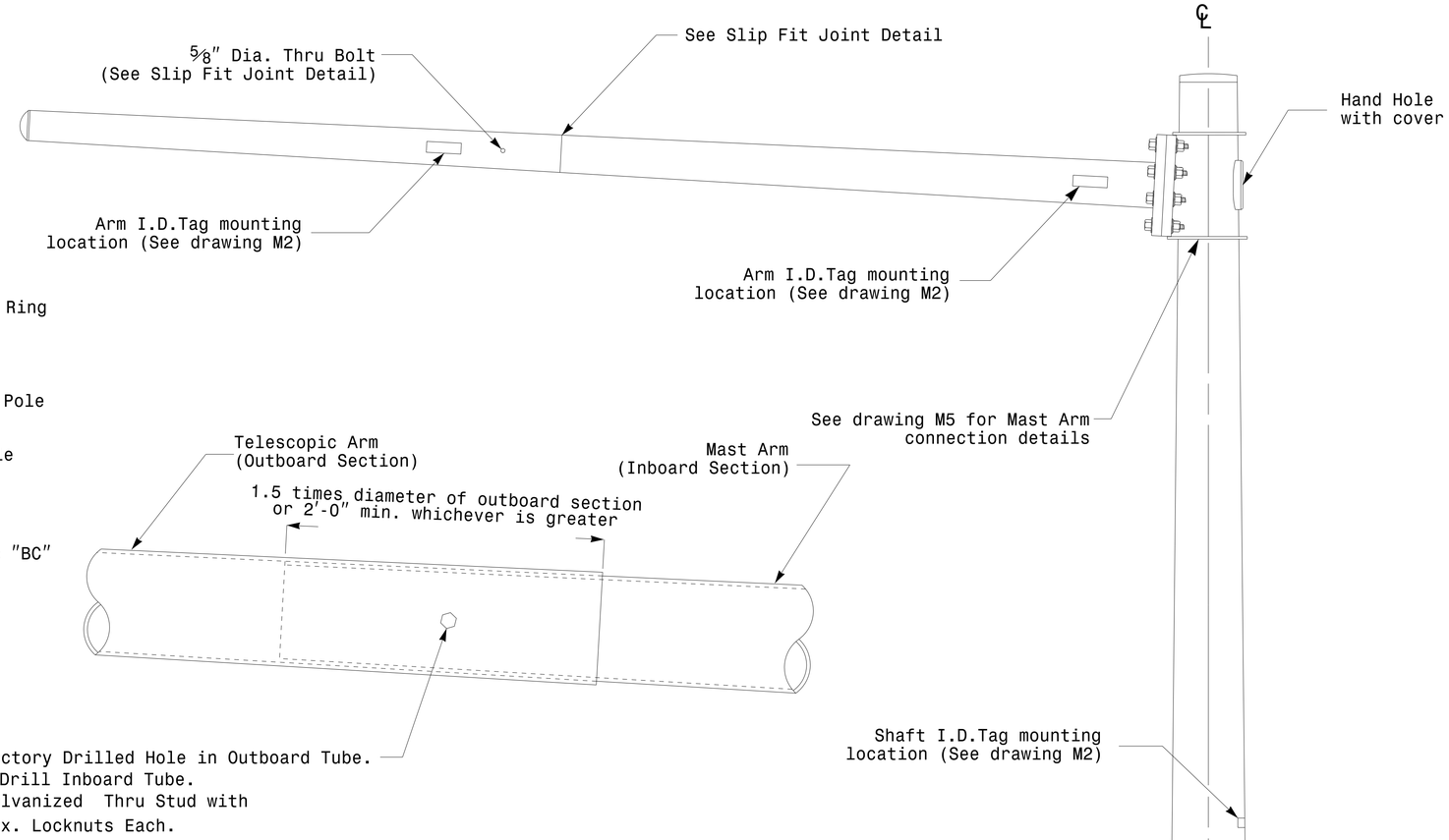

Slip Fit Joint Detail for Mast Arm

Monotube Mast Arm Pole
(.14in./ft. taper)

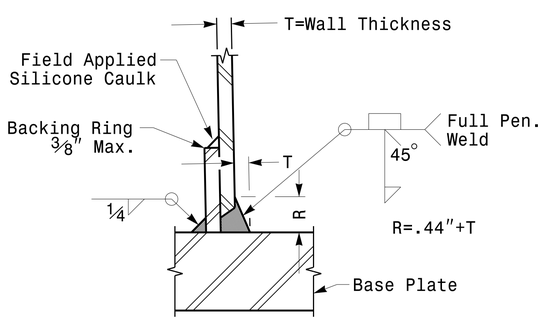

Section B-B

(Pole Attachment to Base Plate)

Full-Penetration Groove Weld Detail

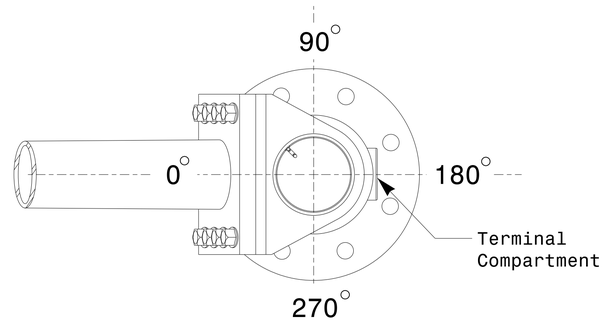

Mast Arm Radial Orientation

Prepared in the Offices of:
Transportation Mobility and Safety Division
Signal Design Section
750 N.Greenfield Pkwy.Garner,NC 27529

Typical Fabrication Details
for Mast Arm Poles

PLAN DATE:	AUGUST 2013	DESIGNED BY:	C.F. ANDREWS
PREPARED BY:	N. BITTING	REVIEWED BY:	D.C. SARKAR

SCALE 0 NA NONE

REVISIONS	INIT.	DATE

SEAL
NORTH CAROLINA PROFESSIONAL SEAL 028094 ENGINEER DEBESH C. SARKAR

DocuSigned by: Debesh C. Sarkar 44EBE3E147E4C4... 8/26/2014
DATE

SIG. INVENTORY NO.

26-AUG-2014 08:50
S:\TSG\Traffic Signals\Signal Design Section\Eastern Region\M Sheets\2012_M4_Fab Details Mastarms.dgn
jgallaway

PROJECT REFERENCE NO.	SHEET NO.
W-5206AA	Sig. M5

Welded Ring Stiffened Mast Arm Connection

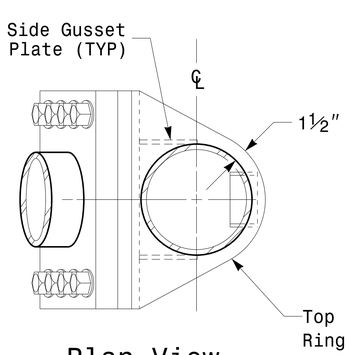

Plan View

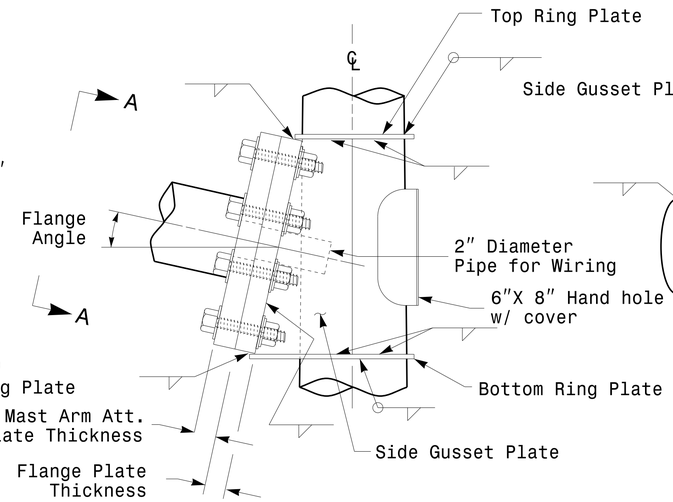

Side Elevation View

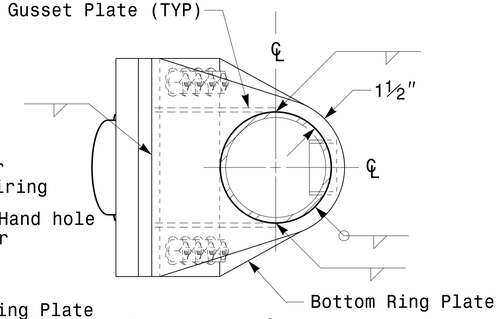

Bottom View

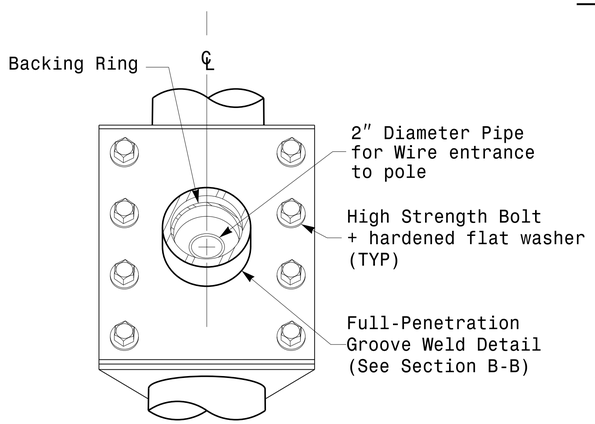

Front Elevation View

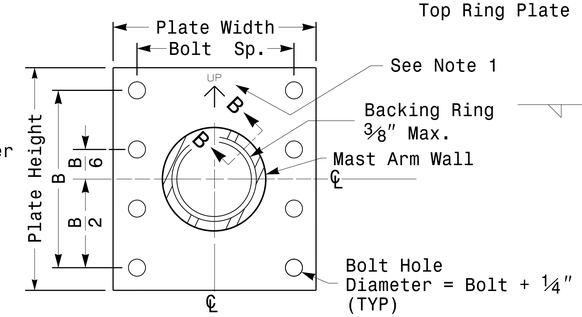

Section View A-A

Mast Arm Attachment Plate

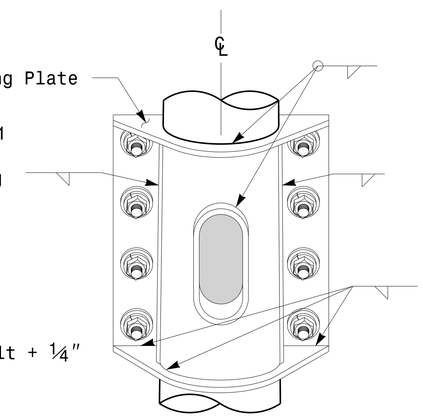

Back Elevation View

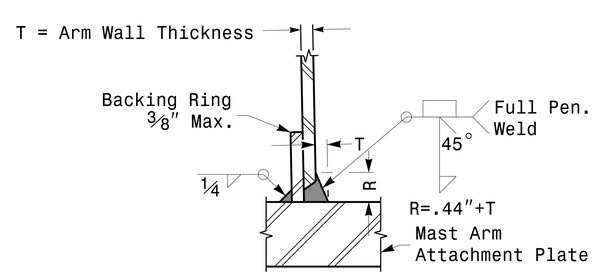

Section B-B

Full-Penetration Groove Weld Detail

Notes:

1. Provide a permanent means of identification above the mast arm to indicate proper attachment orientation of the mast arm.
2. Designer will determine the size of all structural components, plates, fasteners, and welds shown unless they are already specified.
3. Designer is responsible for providing appropriate drainage points.

Prepared in the Offices of:
Transportation Mobility and Safety Division
Signal Design Section
750 N.Greenfield Pkwy,Garner,NC 27529

Fabrication Details For Mast Arm Connection To Pole

PLAN DATE:	AUGUST 2013	DESIGNED BY:	C.F. ANDREWS
PREPARED BY:	N. BITTING	REVIEWED BY:	D.C. SARKAR

SCALE: 0 NA — NONE

REVISIONS | INIT. | DATE

SEAL: NORTH CAROLINA PROFESSIONAL SEAL 028094 ENGINEER DEBESH C. SARKAR

DocuSigned by: Debesh C. Sarkar 44EBE3E147E4C4... 8/26/2014 DATE

SIG. INVENTORY NO.

Fabrication Details – Mast Arm Poles

26-AUG-2014 08:47
S:\TSG\Traffic Signals\Signal Design Section\Eastern Region\MU Sheets\2012_M5_Fab Details Mastarms.dgn
jgalloway

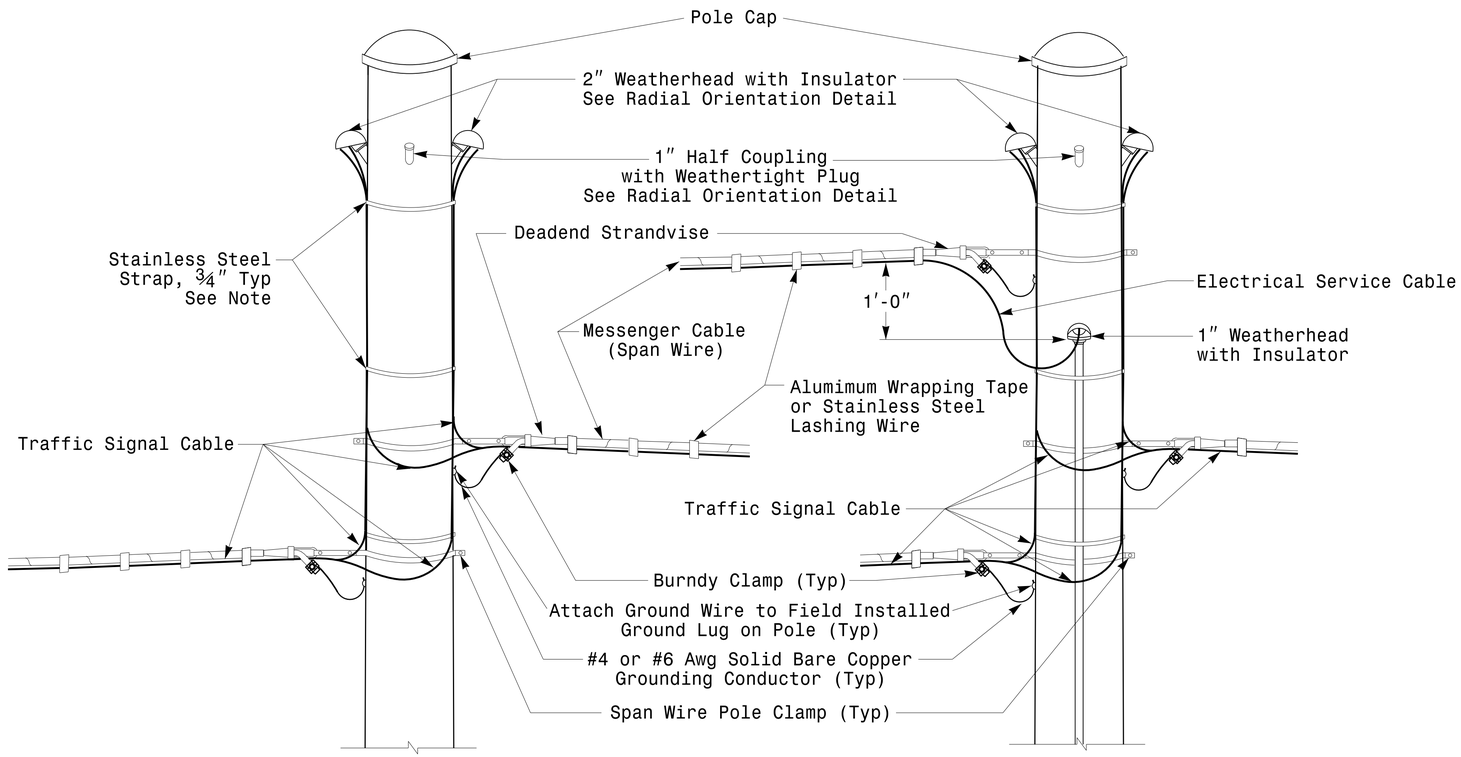

Strain Pole Attachments

Note: Strap all signal cables to the side of the pole with 3/4″ stainless steel straps when the distance between the spanwire attachment clamp and the weatherheads exceeds 36″

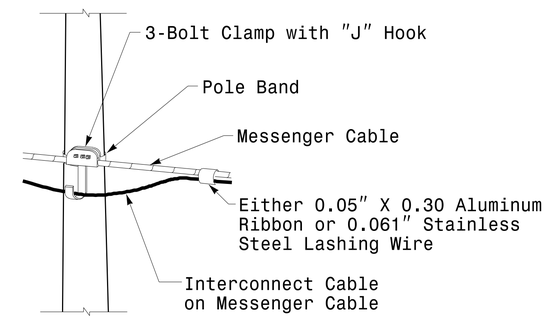

Attachment of Cable to Intermediate Metal Pole

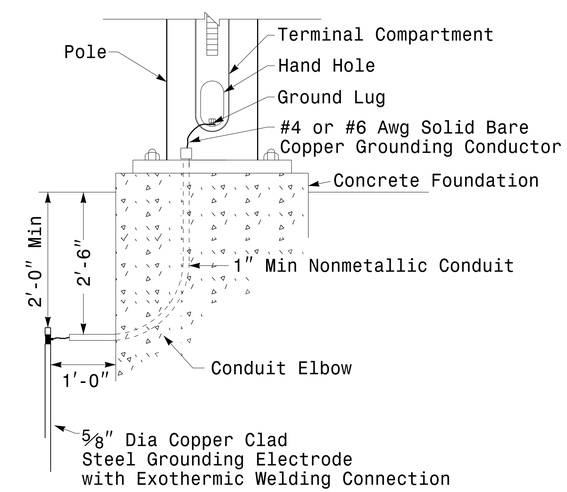

Metal Pole Grounding Detail

Construction Details – Strain Poles

Prepared in the Offices of:
Transportation Mobility and Safety Division
Signal Design Section
750 N.Greenfield Pkwy.Garner,NC 27529

Construction Details
Strain Poles

PLAN DATE:	AUGUST 2013	REVIEWED BY:	C.F. ANDREWS
PREPARED BY:	N. BITTING	REVIEWED BY:	D.C. SARKAR

SCALE 0 NA NONE

REVISIONS	INIT.	DATE

SEAL
NORTH CAROLINA PROFESSIONAL SEAL 028094 ENGINEER DEBESH C. SARKAR

DocuSigned by: Debesh C. Sarkar 8/26/2014
44E8E82E147E4C4...
DATE

SIG. INVENTORY NO.

26-AUG-2014 08:45
S:\Traffic\Signals\Signal Design Section\Eastern Region\M Sheets\2012_MS_Con Details Strain Poles.dgn
jgalloway

PROJECT REFERENCE NO.	SHEET NO.
W-5206AA	Sig. M7

Construction Details – Foundations

Reinforcing Steel Bars

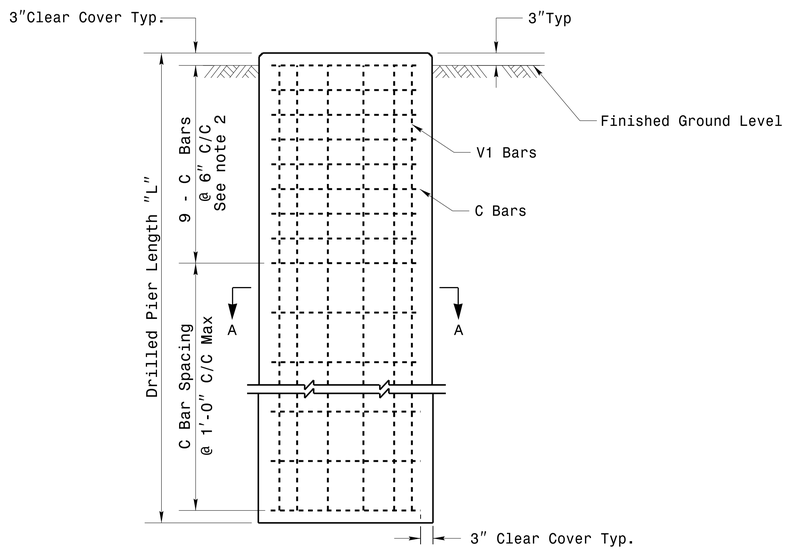

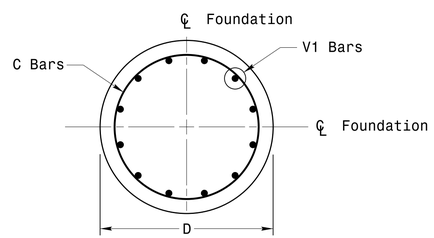

Section A-A

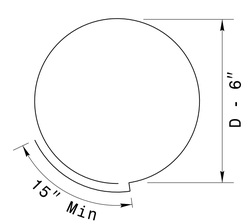

Typical "C" Bars

REINFORCING STEEL TABLE FOR STANDARD DRILL PIER SHAFT (4'–0" DIAMETER)						
Shaft Dia (in.)	Conc. Volume (cu. yds.)	Bar Name	MIN.	Size	Type	Length
48"	.465 x L	V1	***	#8	STR.	**
		C	*	#4	CIR.	12'-6"

* See Note No. 1
** See Note No. 3
*** See Note No. 4

Typical Foundation Anchor Bolt Details

(Reinforcing Cage Not Shown for Clarity)

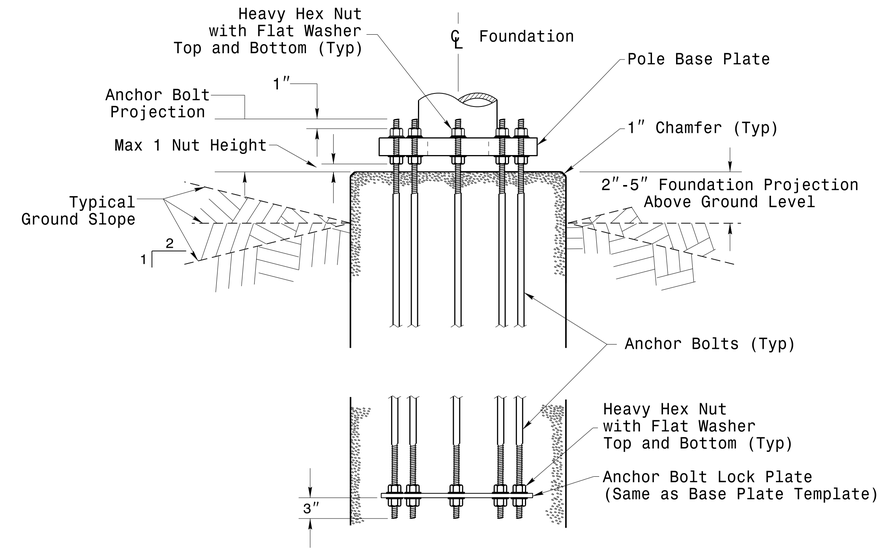

Typical Foundation Conduit Details

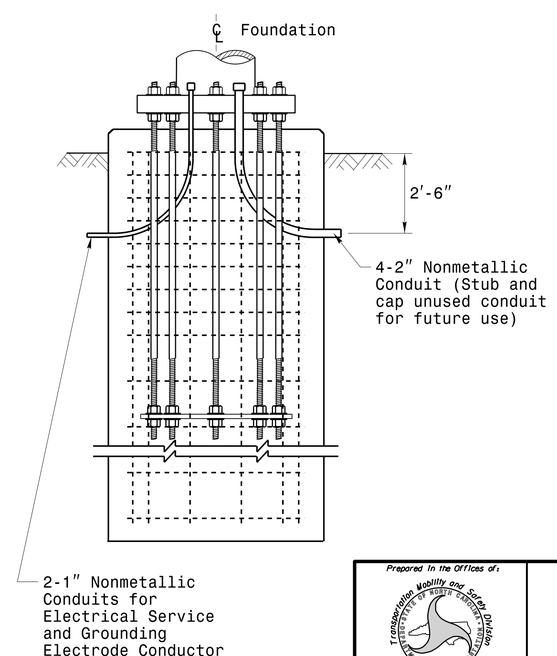

Notes

1. The number of C-bars is based on foundation depth and/or as required. For standard foundations, see sheets M 8 and M 9 for details.
2. Circular tie reinforcing rings may be vertically adjusted by +/- 3" at a depth between 2'-0" and 3'-0" to facilitate the installation of electrical conduit entering in the cage.
3. The length of V1-bars is based on foundation depth. For standard foundations, see sheets M 8 and M 9 for details. Vertical reinforcing bars (V1) may be horizontally adjusted by +/-3"to facilitate the installation of electrical conduit entering into the cage.
4. Provide vertical reinforcement as required per design. See sheets M 8 and M9 for details.

Prepared in the Offices of:
Transportation Mobility and Safety Division
STATE OF NORTH CAROLINA DEPARTMENT OF TRANSPORTATION
Signal Design Section
750 N.Greenfield Pkwy,Garner,NC 27529

SCALE
0 NA
NONE

Construction Details
Foundations

PLAN DATE:	AUGUST 2013	DESIGNED BY:	K.C. DURIGON
PREPARED BY:	N. BITTING	REVIEWED BY:	D.C. SARKAR

REVISIONS	INIT.	DATE

SEAL
NORTH CAROLINA PROFESSIONAL SEAL 028094 ENGINEER DEBESH C. SARKAR

DocuSigned by: Debesh C. Sarkar 44EBE3E147E4C4... 8/26/2014
DATE

SIG. INVENTORY NO.

DS-AUG-2014 08:44
S:\TIGS\M\TIS\Signals\Signal Design Sections\Eastern Region\MM Sheets\2012_M7_Con Details Foundations.dgn
jgallaway

SATURATED SOIL CONDITION

PROJECT REFERENCE NO.	SHEET NO.
W-5206AA	Sig. M8

		STANDARD STRAIN POLES						STANDARD FOUNDATIONS 48" Diameter Drilled Pier Length (L) – Feet							Reinforcement			
					Reactions at the Pole Base			Clay				Sand			Longitudinal		Stirrups	
		Case No.	Pole Height (Ft.)	Base Plate BC (In.)	Axial (kip)	Shear (kip)	Moment (ft–kip)	Medium N–Value 4–8	Stiff N–Value 9–15	Very Stiff N–Value 16–30	Hard N–Value >30	Loose N–Value 4–10	Medium N–Value 11–30	Dense N–Value >30	Bar Size (#)	Quantity	Bar Size (#)	Spacing (in.)
WIND ZONE 1	LIGHT	S26L3	26	25	2	11	270	19	13	9	8	17	14.5	12.5	8	13	4	12
		S30L3	30	25	2	11	300	20	13.5	9	8	17.5	15	13	8	14	4	12
		S35L3	35	25	3	11	320	20	13.5	9.5	8	17.5	15	13	8	15	4	12
	HEAVY	S30H3	30	29	3	16	450	24.5	17	13	11	21	17.5	15	8	18	4	12
		S35H3	35	29	4	16	515	26	17.5	12	8.5	22	18.5	16	8	20	4	12
WIND ZONE 2	LIGHT	S26L2	26	23	2	10	245	18	12.5	8.5	8	16.5	14	12	8	13	4	12
		S30L2	30	23	2	10	270	19	12.5	9	8	16.5	14	12.5	8	13	4	12
		S35L2	35	23	3	10	300	19.5	13	9	8	17	14.5	13	8	14	4	12
	HEAVY	S30H2	30	29	3	15	415	25.5	15.5	11	8	20	17	14.5	8	17	4	12
		S35H2	35	29	4	15	475	25	16.5	11.5	8	21	17.5	15.5	8	19	4	12
WIND ZONE 3	LIGHT	S26L2	26	23	2	10	245	18	12.5	8.5	8	16.5	14	12	8	13	4	12
		S30L2	30	23	2	10	270	19	12.5	9	8	16.5	14	12.5	8	13	4	12
		S35L2	35	23	3	10	300	19.5	13	9	8	17	14.5	13	8	14	4	12
	HEAVY	S30H2	30	29	3	15	415	25.5	15.5	11	8	20	17	14.5	8	17	4	12
		S35H2	35	29	4	15	475	25	16.5	11.5	8	21	17.5	15.5	8	19	4	12
WIND ZONE 4	LIGHT	S26L1	26	22	2	8	190	16	11	8	8	15	12.5	11	8	12	4	12
		S30L1	30	22	2	8	205	16.5	11.5	8	8	15	13	11.5	8	12	4	12
		S35L1	35	22	3	8	230	17	12	8	8	15.5	13.5	11.5	8	12	4	12
	HEAVY	S30H1	30	25	3	12	320	20.5	14	9.5	8	18	15	13.5	8	15	4	12
		S35H1	35	25	4	12	350	21	14.5	10	8	18.5	15.5	13.5	8	16	4	12
WIND ZONE 5	LIGHT	S26L2	26	23	2	10	245	18	12.5	8.5	8	16.5	14	12	8	13	4	12
		S30L2	30	23	2	10	270	19	12.5	9	8	16.5	14	12.5	8	13	4	12
		S35L2	35	23	3	10	300	19.5	13	9	8	17	14.5	13	8	14	4	12
	HEAVY	S30H2	30	29	3	15	415	25.5	15.5	11	8	20	17	14.5	8	17	4	12
		S35H2	35	29	4	15	475	25	16.5	11.5	8	21	17.5	15.5	8	19	4	12

48" Dia. Foundations Concrete Volume (cubic yards) = (0.465) x Foundation Depth

Fabrication Design Notes:

1. Values shown in the "Reactions at the Pole Base" column represent the minimum acceptable capacity allowed for design using a design CSR of 1.00.
2. Min. base plate thickness (T) is 2.0 inches.

Foundation Selection:

1. Perform a standard penetration test at each proposed foundation site to determine "N" value.
2. Select the appropriate wind zone from M 1 drawing.
3. Select the soil type (Clay or Sand) that best describes the soil characteristics.
4. Get the appropriate standard pole case number from the plans or from the Engineer.
5. Select the appropriate column in the chart based on soil type and "N" value. Select the appropriate row based on the pole load case.
   The foundation depth is the value where the column and the row intersect.
6. Reference Drilled Shafts: Construction Procedures and Design Methods, FHWA -IF-99-025

S30H1 - Hard Clay-Stirrup Spacing: 6 in. c/c
S30H2 - Hard Clay-Stirrup Spacing: 6 in. c/c
S30H3 - Hard Clay-Stirrup Spacing: 6 in. c/c
- Dense Sand-Stirrup Spacing: 6 in. c/c
S35H1 - Hard Clay - Stirrup Spacing: 6 in. c/c
S35H2 - Very Stiff Clay-Stirrup Spacing: 6 in. c/c
- Hard Clay- Stirrup Spacing: 6 in. c/c
- Dense Sand- Stirrup Spacing: 6 in. c/c
S35H3 - Very Stiff Clay-Stirrup Spacing: 6 in. c/c
- Dense Sand-Stirrup Spacing: 6 in. c/c

Standard Strain Pole Foundation–Saturated Soil Condition

Prepared in the Offices of:
Transportation Mobility and Safety Division
Signal Design Section
750 N.Greenfield Pkwy,Garner,NC 27529

Standard Strain Pole Foundation for Saturated Soil Condition

PLAN DATE: SEPTEMBER 2013 | DESIGNED BY: C.B COGDELL
PREPARED BY: N. BITTING | REVIEWED BY: D. SARKAR

SCALE: 0 NA None

REVISIONS | INIT. | DATE

SEAL 028094 NORTH CAROLINA PROFESSIONAL ENGINEER DEBESH C. SARKAR

DocuSigned by: Debesh C. Sarkar 8/26/2014
44E8E32E147E4C4...
DATE

25-AUG-2014 08:49
S:\TMS\SIG\M15\Signals\Signal Design Section\Eastern Region\M Sheets\2012_M8_Standard Foundations Wet.dgn
jgalloway

DRY SOIL CONDITION

PROJECT REFERENCE NO.	SHEET NO.
W-5206AA	Sig. M9

		STANDARD STRAIN POLES						STANDARD FOUNDATIONS 48″ Diameter Drilled Pier Length (L) – Feet							Reinforcement			
					Reactions at the Pole Base			Clay				Sand			Longitudinal		Stirrups	
		Case No.	Pole Height (Ft.)	Base Plate BC (In.)	Axial (kip)	Shear (kip)	Moment (ft-kip)	Medium N-Value 4-8	Stiff N-Value 9-15	Very Stiff N-Value 16-30	Hard N-Value >30	Loose N-Value 4-10	Medium N-Value 11-30	Dense N-Value >30	Bar Size (#)	Quantity	Bar Size (#)	Spacing (in.)
WIND ZONE 1	LIGHT	S26L3	26	25	2	11	270	18	12.5	9	8	14.5	11	10	8	13	4	12
		S30L3	30	25	2	11	300	18.5	13	9	8	15	11.5	10	8	14	4	12
		S35L3	35	25	3	11	320	19	13.5	9.5	8	15	11.5	10.5	8	15	4	12
	HEAVY	S30H3	30	29	3	16	450	23	16	11	8	17.5	13.5	11.5	8	18	4	12
		S35H3	35	29	4	16	515	24.5	16.5	12	8.5	18.5	14	12	8	20	4	12
WIND ZONE 2	LIGHT	S26L2	26	23	2	10	245	17	12	8.5	8	14	11	9.5	8	13	4	12
		S30L2	30	23	2	10	270	18	12.5	8.5	8	14.5	11	10	8	13	4	12
		S35L2	35	23	3	10	300	18.5	13	9	8	14.5	11.5	10	8	14	4	12
	HEAVY	S30H2	30	29	3	15	415	22	15	10.5	8	17	13	11.5	8	17	4	12
		S35H2	35	29	4	15	475	23.5	16	11.5	8	18	13.5	12	8	19	4	12
WIND ZONE 3	LIGHT	S26L2	26	23	2	10	245	17	12	8.5	8	14	11	9.5	8	13	4	12
		S30L2	30	23	2	10	270	18	12.5	8.5	8	14.5	11	10	8	13	4	12
		S35L2	35	23	3	10	300	18.5	13	9	8	14.5	11.5	10	8	14	4	12
	HEAVY	S30H2	30	29	3	15	415	22	15	10.5	8	17	13	11.5	8	17	4	12
		S35H2	35	29	4	15	475	23.5	16	11.5	8	18	13.5	12	8	19	4	12
WIND ZONE 4	LIGHT	S26L1	26	22	2	8	190	15.5	10.5	8	8	13	10	9	8	12	4	12
		S30L1	30	22	2	8	205	15.5	11	8	8	13	10	9	8	12	4	12
		S35L1	35	22	3	8	230	16.5	11.5	8	8	13.5	10.5	9	8	12	4	12
	HEAVY	S30H1	30	25	3	12	320	19.5	13.5	9.5	8	15	12	10.5	8	15	4	12
		S35H1	35	25	4	12	350	20	14	10	8	15.5	12	10.5	8	15	4	12
WIND ZONE 5	LIGHT	S26L2	26	23	2	10	245	17	12	8.5	8	14	11	9.5	8	13	4	12
		S30L2	30	23	2	10	270	18	12.5	8.5	8	14.5	11	10	8	13	4	12
		S35L2	35	23	3	10	300	18.5	13	9	8	14.5	11.5	10	8	14	4	12
	HEAVY	S30H2	30	29	3	15	415	22	15	10.5	8	17	13	11.5	8	17	4	12
		S35H2	35	29	4	15	475	23.5	16	11.5	8	18	13.5	12	8	19	4	12

48″ Dia. Foundations Concrete Volume (cubic yards) = (0.465) x Foundation Depth

Fabrication Design Notes:

1. Values shown in the "Reactions at the Pole Base" column represent the minimum acceptable capacity allowed for design using a design CSR of 1.00.
2. Min. base plate thickness (T) is 2.0 inches.

Foundation Selection:

1. Perform a standard penetration test at each proposed foundation site to determine "N" value.
2. Select the appropriate wind zone from M 1 drawing.
3. Select the soil type (Clay or Sand) that best describes the soil characteristics.
4. Get the appropriate standard pole case number from the plans or from the Engineer.
5. Select the appropriate column in the chart based on soil type and "N" value. Select the appropriate row based on the pole load case.
   The foundation depth is the value where the column and the row intersect.
6. Reference Drilled Shafts: Construction Procedures and Design Methods, FHWA -IF-99-025

S30H1 - Hard Clay-Stirrup Spacing: 6 in. c/c
- Dense Sand-Stirrup Spacing: 6 in. c/c

S30H2 - Very Stiff Clay: Stirrup Spacing: 6 in. c/c
- Hard Clay: Stirrup Spacing: 6 in. c/c
- Medium Clay: Stirrup Spacing: 6 in. c/c
- Dense Sand: Stirrup Spacing: 6 in. c/c

S30H3 - Very Stiff Clay: Stirrup Spacing: 6 in. c/c
- Hard Clay: Stirrup Spacing: 6 in. c/c
- Medium Clay: Stirrup Spacing: 6 in. c/c
- Dense Sand: Stirrup Spacing: 6 in. c/c

S35H1 - Hard Clay: tirrup Spacing: 6 in. c/c
- Dense Sand: Stirrup Spacing: 6 in. c/c

S35H2 - Very Stiff Clay: Stirrup Spacing: 6 in. c/c
- Hard Clay: Stirrup Spacing: 6 in. c/c
- Medium Clay: Stirrup Spacing: 6 in. c/c
- Dense Sand: Stirrup Spacing: 6 in. c/c

S35H3 - Very Stiff Clay: Stirrup Spacing: 6 in. c/c
- Hard Clay: Stirrup Spacing: 6 in. c/c
- Medium Clay: Stirrup Spacing: 6 in. c/c
- Dense Sand: Stirrup Spacing: 6 in. c/c

Standard Strain Pole Foundation–Dry Soil Condition

Prepared in the Offices of:
Transportation Mobility and Safety Division
STATE OF NORTH CAROLINA DEPARTMENT OF TRANSPORTATION
Signal Design Section
750 N.Greenfield Pkwy.Garner,NC 27529

Standard Strain Pole Foundation for Dry Soil Condition

PLAN DATE: SEPTEMBER 2013	DESIGNED BY: C.B COGDELL
PREPARED BY: N. BITTING	REVIEWED BY: D. SARKAR

SCALE: 0 NA None

REVISIONS	INIT.	DATE

SEAL
NORTH CAROLINA PROFESSIONAL SEAL 028094 ENGINEER DEBESH C. SARKAR

DocuSigned by: Debesh C. Sarkar 8/26/2014
44E8E32E147E4C4...
DATE

26-AUG-2014 08:38
S:\TIMS\M415\Signals\Signal Design Section\Eastern Region\M Sheets\2012_M9_Standard Foundations Dry.dgn
jgalloway

09/08/99

TIP PROJECT: W-5206AA

STATE OF NORTH CAROLINA
DIVISION OF HIGHWAYS

T.I.P. NO.	SHEET NO.
W-5206AA	UO-1

UTILITIES BY OTHERS PLANS
CUMBERLAND COUNTY

LOCATION: NC 59 (Main Street/Hope Mills Road) from SR 1003 (Camden Road) to SR 1112 (Rockfish Road)

TYPE OF WORK: Aerial & Buried Utilities

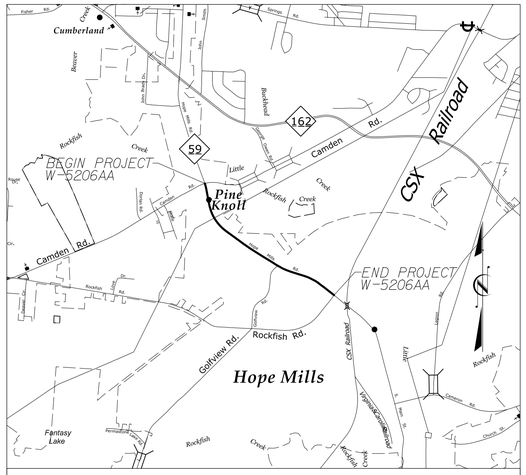

VICINITY MAP

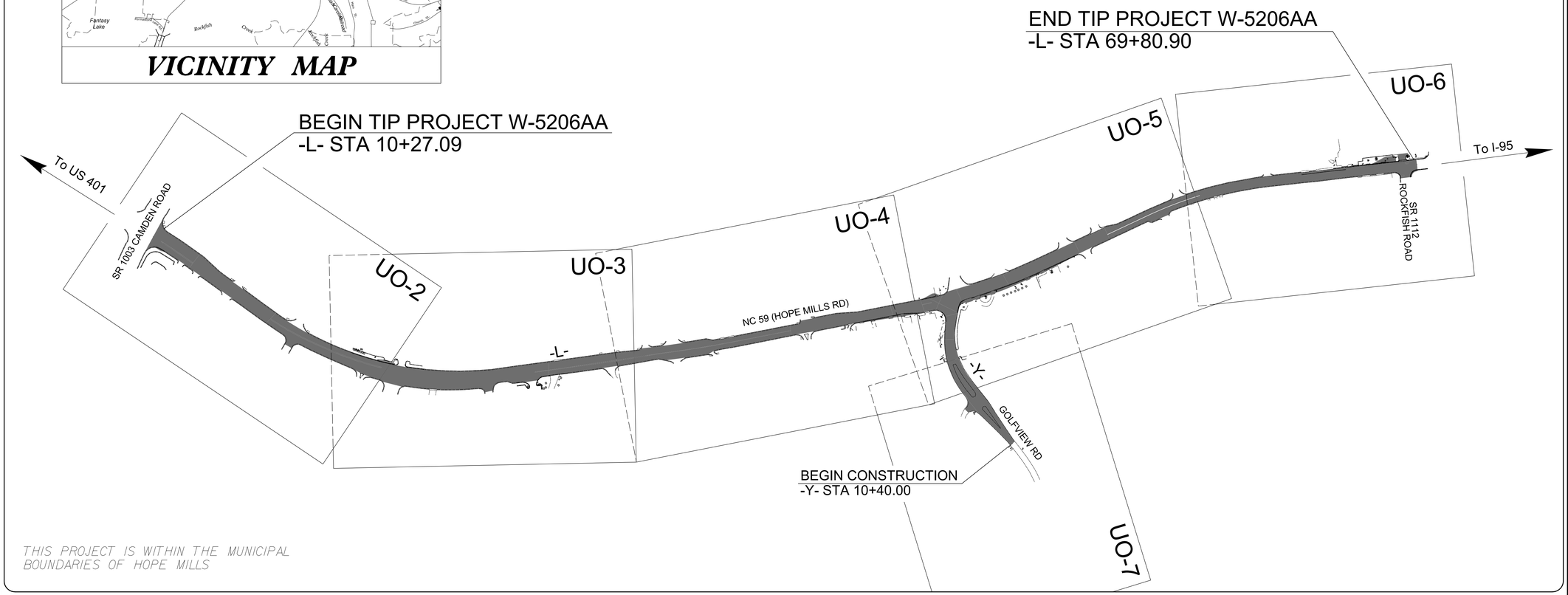

THIS PROJECT IS WITHIN THE MUNICIPAL BOUNDARIES OF HOPE MILLS

PROJECT:

$$$$SYSTIME$$$$
$$$$USERNAME$$$$ $$$$DGN$$$$

GRAPHIC SCALES

50 25 0 50 100
PLANS

INDEX OF SHEETS

SHEET NO.	DESCRIPTION
UO-1	TITLE SHEET
UO-2 THRU UO-7	UTILITIES BY OTHERS PLAN SHEET

POWER AND PHONE OWNERS ON PROJECT

(1) POWER – DUKE ENERGY PROGRESS
WAYNE AYCOCK (910) 620-1487

(2) TELEPHONE – CENTURYLINK
KEVIN GODWIN PHONE (910) 366-2142

(3) WATER & SEWER – FAYETTEVILLE PUBLIC WORKS COM.
JOHN ALLEN (910) 223-4734

(4) CABLE – TIME WARNER CABLE
JACK CRABB (910) 401-5034

(5) GAS – PIEDMONT NATURAL GAS (PNG)
DOUGLAS WARD PHONE (910) 321-2908

PLANS PREPARED BY:

CH ENGINEERING
3220 GLEN ROYAL RD. RALEIGH, NC 27617
TELE 919.788.0224 FAX 919.788.0232
NC LICENSE #P-0189

UTILITIES PROJECT ENGINEER

Mary Jo Lee, P.E.

PREPARED FOR THE OFFICE OF:
DIVISION OF HIGHWAYS
UTILITIES UNIT
UTILITIES ENGINEERING

1555 MAIL SERVICE CENTER
RALEIGH NC 27699-1555
PHONE (919) 707-6690
FAX (919) 250-4151

Roger Worthington, P.E. UTILITIES SECTION ENGINEER

PROJECT REFERENCE NO.	SHEET NO.
W-5206AA	U0-2

UTILITIES BY OTHERS

CONTACT INFORMATION FOR UTILITIES

POWER: DUKE ENERGY PROGRESS; WAYNE AYCOCK (910)–620–1487 WAYNE.AYCOCK@DUKE–ENGERGY.COM
PHONE: CENTURYLINK; KEVIN GODWIN (910)–366–2142 KEVIN.GODWIN@CENTURYLINK.COM
CABLE: TIME WARNER CABLE; JACK CRABB (910)–401–5034 JACK.CRABB@TWCABLE.COM
WATER & SEWER: FAYETTEVILLE PUBLIC WORKS COMMISION; JOHN ALLEN (910)–223–4734 JOHN.ALLEN@FAYPWC.COM
GAS: PIEDMONT NATURAL GAS (PNG); DOUGLAS WARD (910)–321–2908 DOUGLAS.WARD@PIEDMONTNG.COM

NOTE:
ALL PROPOSED UTILITY WORK SHOWN ON THIS SHEET WILL BE DONE BY OTHERS. NO PAYMENT WILL BE MADE TO THE CONTRACTOR FOR PROPOSED UTILITY WORK SHOWN ON THIS SHEET.

CH ENGINEERING
3220 GLEN ROYAL RD. RALEIGH, NC 27617
TELE 919.788.0224 FAX 919.788.0232
NC LICENSE #P-0189

FOR REMOVAL AND INSTALLATION OF TRAFFIC SIGNAL POLES SEE TRAFFIC SIGNAL PLANS

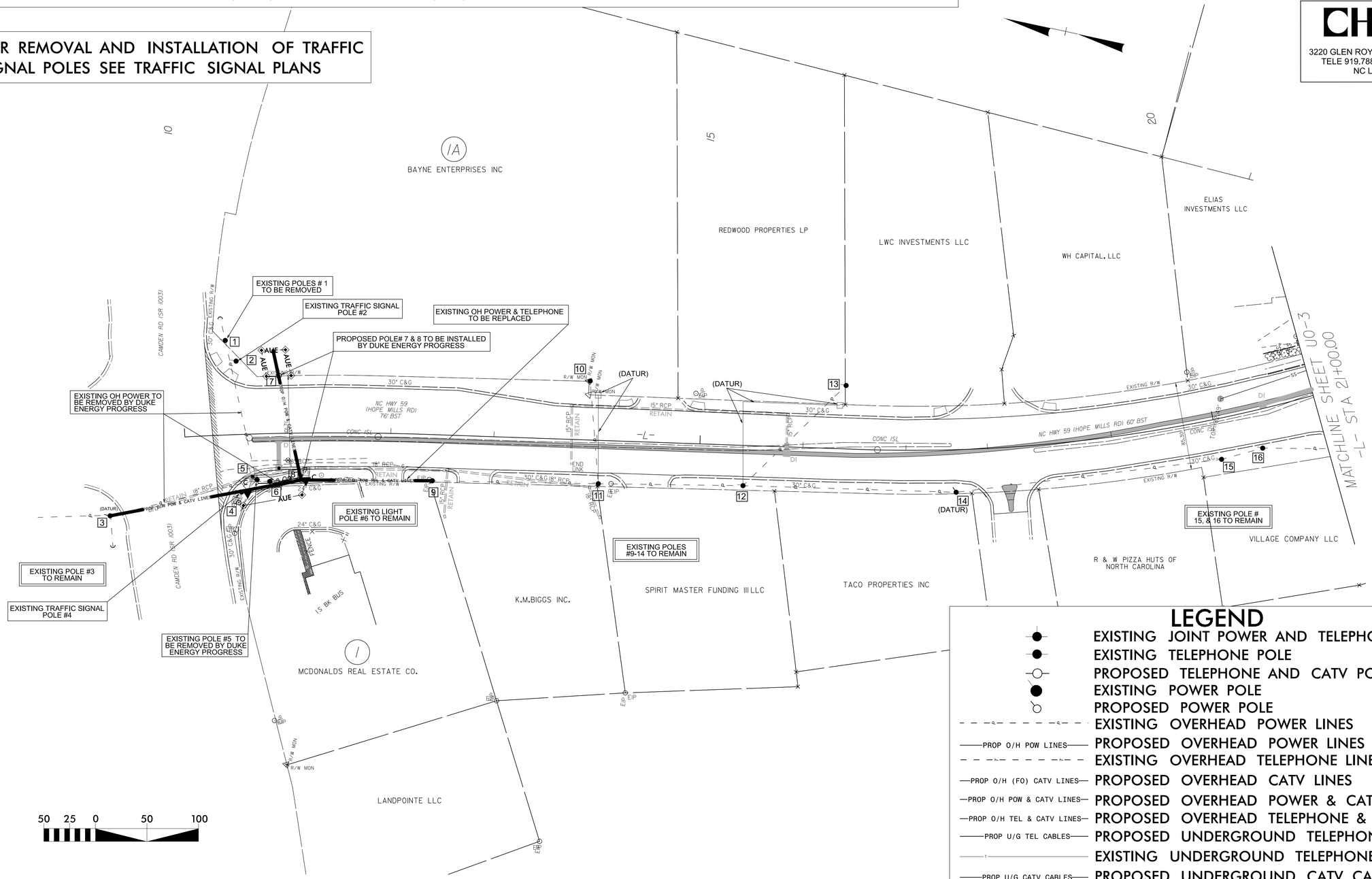

LEGEND

- EXISTING JOINT POWER AND TELEPHONE POLE
- EXISTING TELEPHONE POLE
- PROPOSED TELEPHONE AND CATV POLE
- EXISTING POWER POLE
- PROPOSED POWER POLE
- EXISTING OVERHEAD POWER LINES
- PROP O/H POW LINES — PROPOSED OVERHEAD POWER LINES
- EXISTING OVERHEAD TELEPHONE LINES
- PROP O/H (FO) CATV LINES — PROPOSED OVERHEAD CATV LINES
- PROP O/H POW & CATV LINES — PROPOSED OVERHEAD POWER & CATV LINES
- PROP O/H TEL & CATV LINES — PROPOSED OVERHEAD TELEPHONE & CATV LINES
- PROP U/G TEL CABLES — PROPOSED UNDERGROUND TELEPHONE CABLES
- EXISTING UNDERGROUND TELEPHONE CABLE
- PROP U/G CATV CABLES — PROPOSED UNDERGROUND CATV CABLES
- EXISTING UNDERGROUND CATV CABLE

5/14/99

PROJECT REFERENCE NO.	SHEET NO.
W-5206AA	U0-3

UTILITIES BY OTHERS

NOTE:
ALL PROPOSED UTILITY WORK SHOWN ON THIS SHEET WILL BE DONE BY OTHERS. NO PAYMENT WILL BE MADE TO THE CONTRACTOR FOR PROPOSED UTILITY WORK SHOWN ON THIS SHEET.

CH ENGINEERING
3220 GLEN ROYAL RD. RALEIGH, NC 27617
TELE 919.788.0224 FAX 919.788.0232
NC LICENSE #P-0189

CONTACT INFORMATION FOR UTILITIES

POWER: DUKE ENERGY PROGRESS; WAYNE AYCOCK (910)–620–1487 WAYNE.AYCOCK@DUKE–ENGERGY.COM
PHONE: CENTURYLINK; KEVIN GODWIN (910)–366–2142 KEVIN.GODWIN@CENTURYLINK.COM
CABLE: TIME WARNER CABLE; JACK CRABB (910)–401–5034 JACK.CRABB@TWCABLE.COM
WATER & SEWER: FAYETTEVILLE PUBLIC WORKS COMMISION; JOHN ALLEN (910)–223–4734 JOHN.ALLEN@FAYPWC.COM
GAS: PIEDMONT NATURAL GAS (PNG); DOUGLAS WARD (910)–321–2908 DOUGLAS.WARD@PIEDMONTNG.COM

FOR REMOVAL AND INSTALLATION OF TRAFFIC SIGNAL POLES SEE TRAFFIC SIGNAL PLANS

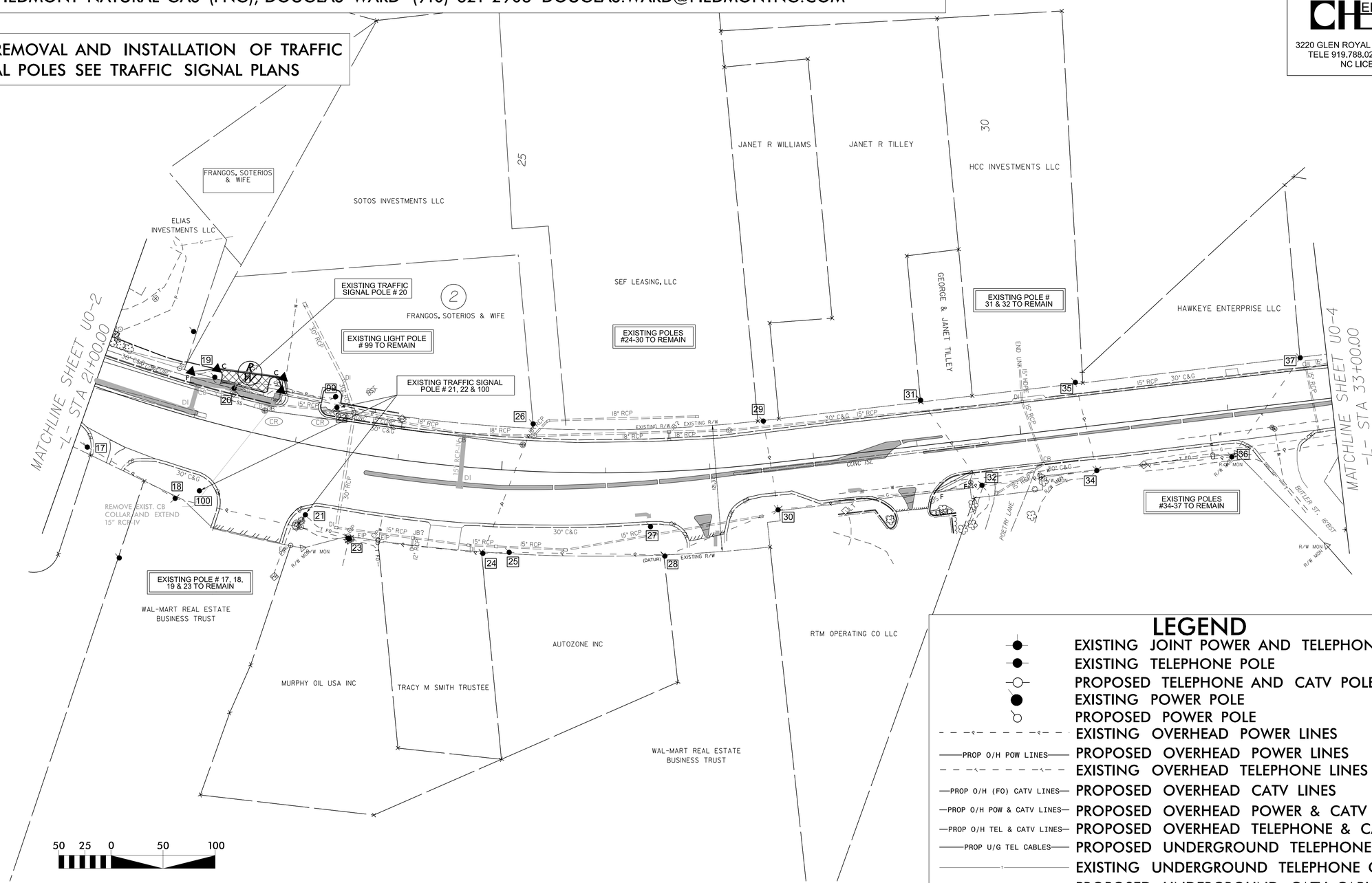

LEGEND

- EXISTING JOINT POWER AND TELEPHONE POLE
- EXISTING TELEPHONE POLE
- PROPOSED TELEPHONE AND CATV POLE
- EXISTING POWER POLE
- PROPOSED POWER POLE
- EXISTING OVERHEAD POWER LINES
- PROP O/H POW LINES — PROPOSED OVERHEAD POWER LINES
- EXISTING OVERHEAD TELEPHONE LINES
- PROP O/H (FO) CATV LINES — PROPOSED OVERHEAD CATV LINES
- PROP O/H POW & CATV LINES — PROPOSED OVERHEAD POWER & CATV CATV LINES
- PROP O/H TEL & CATV LINES — PROPOSED OVERHEAD TELEPHONE & CATV LINES
- PROP U/G TEL CABLES — PROPOSED UNDERGROUND TELEPHONE CABLES
- EXISTING UNDERGROUND TELEPHONE CABLE
- PROP U/G CATV CABLES — PROPOSED UNDERGROUND CATV CABLES
- EXISTING UNDERGROUND CATV CABLE

PROJECT REFERENCE NO.	SHEET NO.
W-5206AA	U0-4

UTILITIES BY OTHERS

NOTE:
ALL PROPOSED UTILITY WORK SHOWN ON THIS SHEET WILL BE DONE BY OTHERS. NO PAYMENT WILL BE MADE TO THE CONTRACTOR FOR PROPOSED UTILITY WORK SHOWN ON THIS SHEET.

CH ENGINEERING
3220 GLEN ROYAL RD. RALEIGH, NC 27617
TELE 919.788.0224 FAX 919.788.0232
NC LICENSE #P-0189

CONTACT INFORMATION FOR UTILITIES

POWER: DUKE ENERGY PROGRESS; WAYNE AYCOCK (910)–620–1487 WAYNE.AYCOCK@DUKE–ENGERGY.COM
PHONE: CENTURYLINK; KEVIN GODWIN (910)–366–2142 KEVIN.GODWIN@CENTURYLINK.COM
CABLE: TIME WARNER CABLE; JACK CRABB (910)–401–5034 JACK.CRABB@TWCABLE.COM
WATER & SEWER: FAYETTEVILLE PUBLIC WORKS COMMISION; JOHN ALLEN (910)–223–4734 JOHN.ALLEN@FAYPWC.COM
GAS: PIEDMONT NATURAL GAS (PNG); DOUGLAS WARD (910)–321–2908 DOUGLAS.WARD@PIEDMONTNG.COM

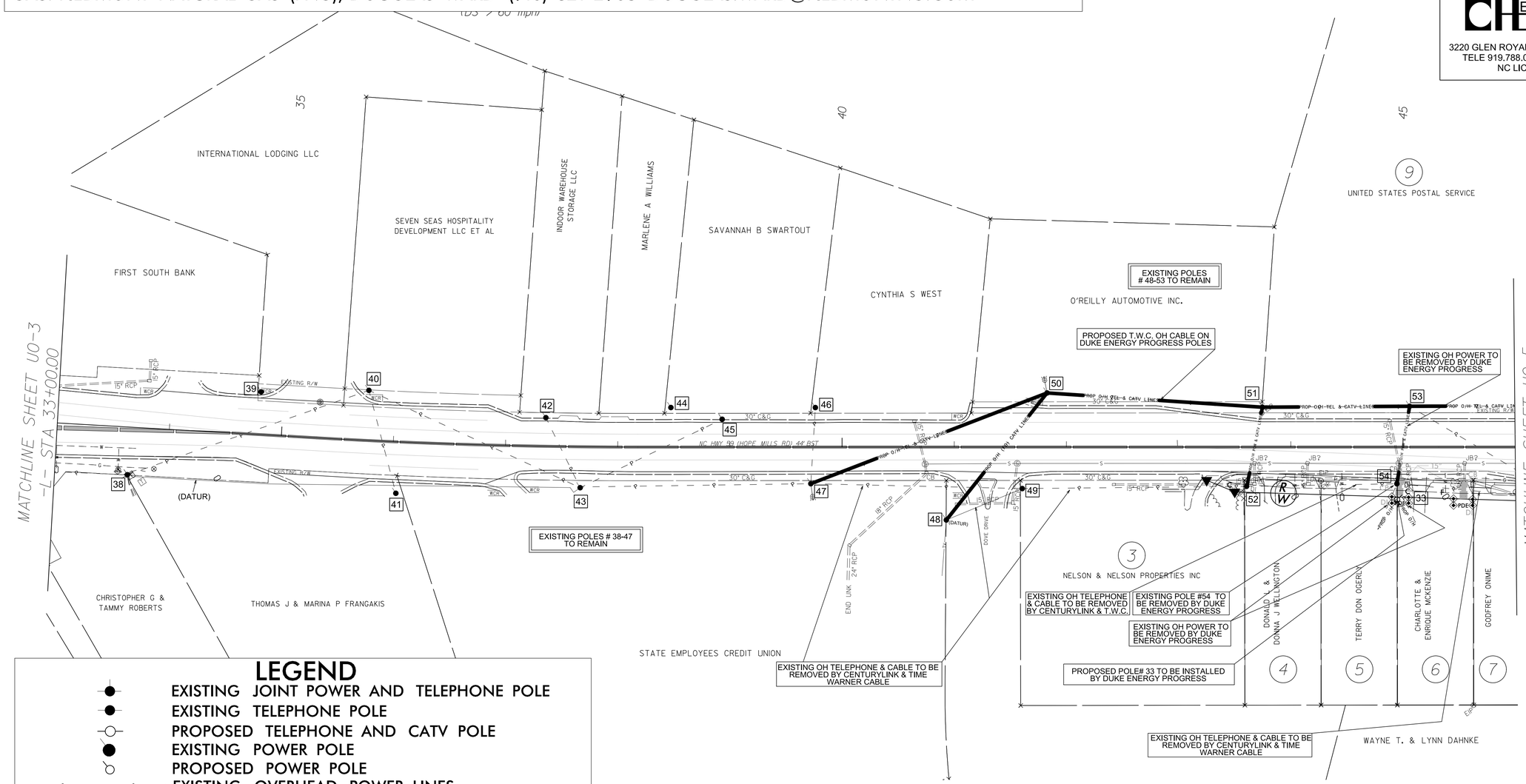

LEGEND

- EXISTING JOINT POWER AND TELEPHONE POLE
- EXISTING TELEPHONE POLE
- PROPOSED TELEPHONE AND CATV POLE
- EXISTING POWER POLE
- PROPOSED POWER POLE
- EXISTING OVERHEAD POWER LINES
- PROP O/H POW LINES — PROPOSED OVERHEAD POWER LINES
- EXISTING OVERHEAD TELEPHONE LINES
- PROP O/H (FO) CATV LINES — PROPOSED OVERHEAD CATV LINES
- PROP O/H POW & CATV LINES — PROPOSED OVERHEAD POWER & CATV CATV LINES
- PROP O/H TEL & CATV LINES — PROPOSED OVERHEAD TELEPHONE & CATV LINES
- PROP U/G TEL CABLES — PROPOSED UNDERGROUND TELEPHONE CABLES
- EXISTING UNDERGROUND TELEPHONE CABLE
- PROP U/G CATV CABLES — PROPOSED UNDERGROUND CATV CABLES
- EXISTING UNDERGROUND CATV CABLE

5/14/99

PROJECT REFERENCE NO.	SHEET NO.
W-5206AA	U0-5

UTILITIES BY OTHERS

CONTACT INFORMATION FOR UTILITIES

POWER: DUKE ENERGY PROGRESS; WAYNE AYCOCK (910)–620–1487 WAYNE.AYCOCK@DUKE–ENGERGY.COM
PHONE: CENTURYLINK; KEVIN GODWIN (910)–366–2142 KEVIN.GODWIN@CENTURYLINK.COM
CABLE: TIME WARNER CABLE; JACK CRABB (910)–401–5034 JACK.CRABB@TWCABLE.COM
WATER & SEWER: FAYETTEVILLE PUBLIC WORKS COMMISION; JOHN ALLEN (910)–223–4734 JOHN.ALLEN@FAYPWC.COM
GAS: PIEDMONT NATURAL GAS (PNG); DOUGLAS WARD (910)–321–2908 DOUGLAS.WARD@PIEDMONTNG.COM

NOTE:
ALL PROPOSED UTILITY WORK SHOWN ON THIS SHEET WILL BE DONE BY OTHERS. NO PAYMENT WILL BE MADE TO THE CONTRACTOR FOR PROPOSED UTILITY WORK SHOWN ON THIS SHEET.

CH ENGINEERING
3220 GLEN ROYAL RD. RALEIGH, NC 27617
TELE 919.788.0224 FAX 919.788.0232
NC LICENSE #P-0189

FOR REMOVAL AND INSTALLATION OF TRAFFIC SIGNAL POLES SEE TRAFFIC SIGNAL PLANS

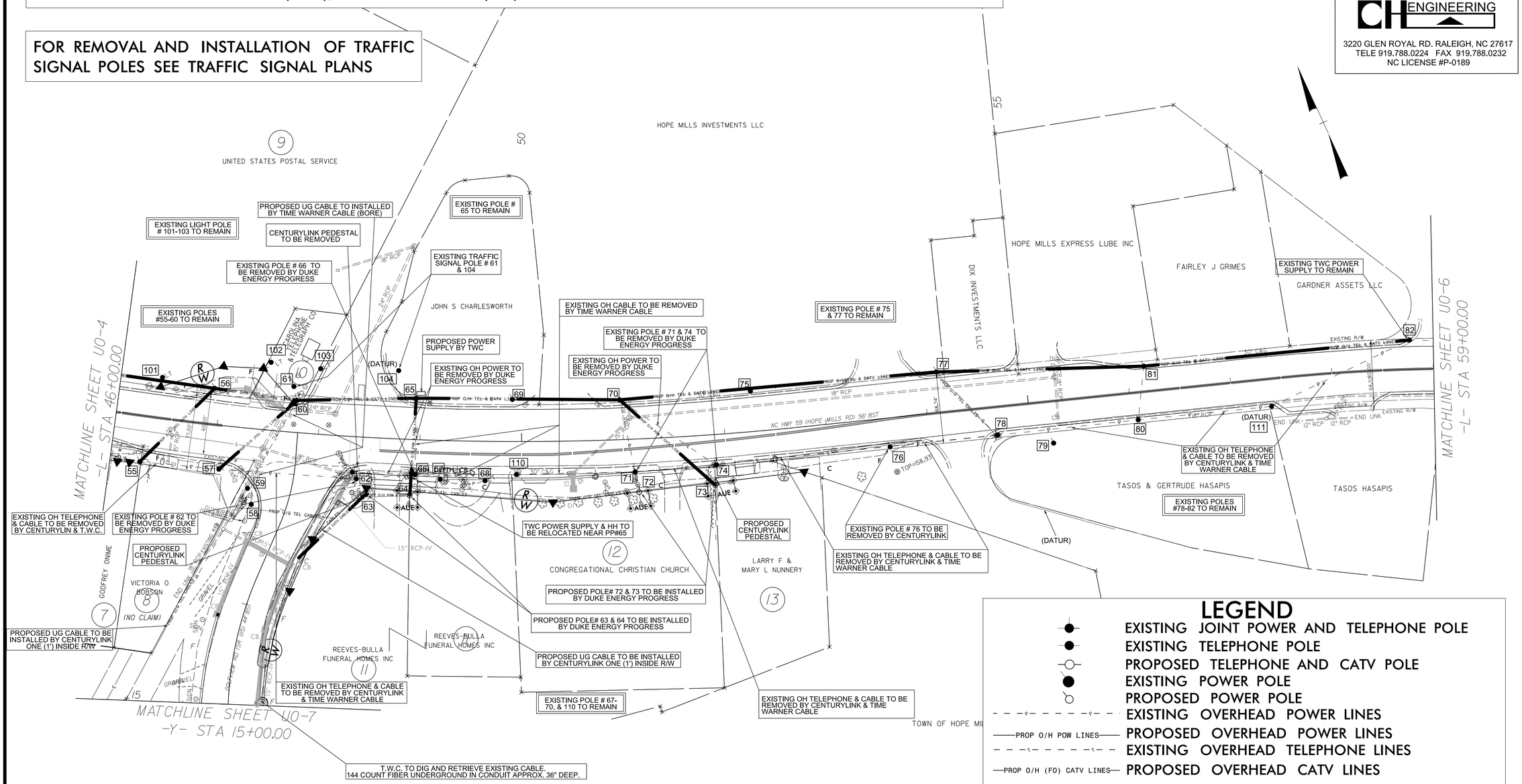

LEGEND

- EXISTING JOINT POWER AND TELEPHONE POLE
- EXISTING TELEPHONE POLE
- PROPOSED TELEPHONE AND CATV POLE
- EXISTING POWER POLE
- PROPOSED POWER POLE
- EXISTING OVERHEAD POWER LINES
- PROP O/H POW LINES — PROPOSED OVERHEAD POWER LINES
- EXISTING OVERHEAD TELEPHONE LINES
- PROP O/H (FO) CATV LINES — PROPOSED OVERHEAD CATV LINES
- PROP O/H POW & CATV LINES — PROPOSED OVERHEAD POWER & CATV CATV LINES
- PROP O/H TEL & CATV LINES — PROPOSED OVERHEAD TELEPHONE & CATV LINES
- PROP U/G TEL CABLES — PROPOSED UNDERGROUND TELEPHONE CABLES
- EXISTING UNDERGROUND TELEPHONE CABLE
- PROP U/G CATV CABLES — PROPOSED UNDERGROUND CATV CABLES
- EXISTING UNDERGROUND CATV CABLE

PROJECT REFERENCE NO.	SHEET NO.
W-5206AA	U0-6

UTILITIES BY OTHERS

CONTACT INFORMATION FOR UTILITIES

POWER: DUKE ENERGY PROGRESS; WAYNE AYCOCK (910)–620–1487 WAYNE.AYCOCK@DUKE–ENGERGY.COM
PHONE: CENTURYLINK; KEVIN GODWIN (910)–366–2142 KEVIN.GODWIN@CENTURYLINK.COM
CABLE: TIME WARNER CABLE; JACK CRABB (910)–401–5034 JACK.CRABB@TWCABLE.COM
WATER & SEWER: FAYETTEVILLE PUBLIC WORKS COMMISION; JOHN ALLEN (910)–223–4734 JOHN.ALLEN@FAYPWC.COM
GAS: PIEDMONT NATURAL GAS (PNG); DOUGLAS WARD (910)–321–2908 DOUGLAS.WARD@PIEDMONTNG.COM

NOTE:
ALL PROPOSED UTILITY WORK SHOWN ON THIS SHEET WILL BE DONE BY OTHERS. NO PAYMENT WILL BE MADE TO THE CONTRACTOR FOR PROPOSED UTILITY WORK SHOWN ON THIS SHEET.

FOR REMOVAL AND INSTALLATION OF TRAFFIC SIGNAL POLES SEE TRAFFIC SIGNAL PLANS

CH ENGINEERING
3220 GLEN ROYAL RD. RALEIGH, NC 27617
TELE 919.788.0224 FAX 919.788.0232
NC LICENSE #P-0189

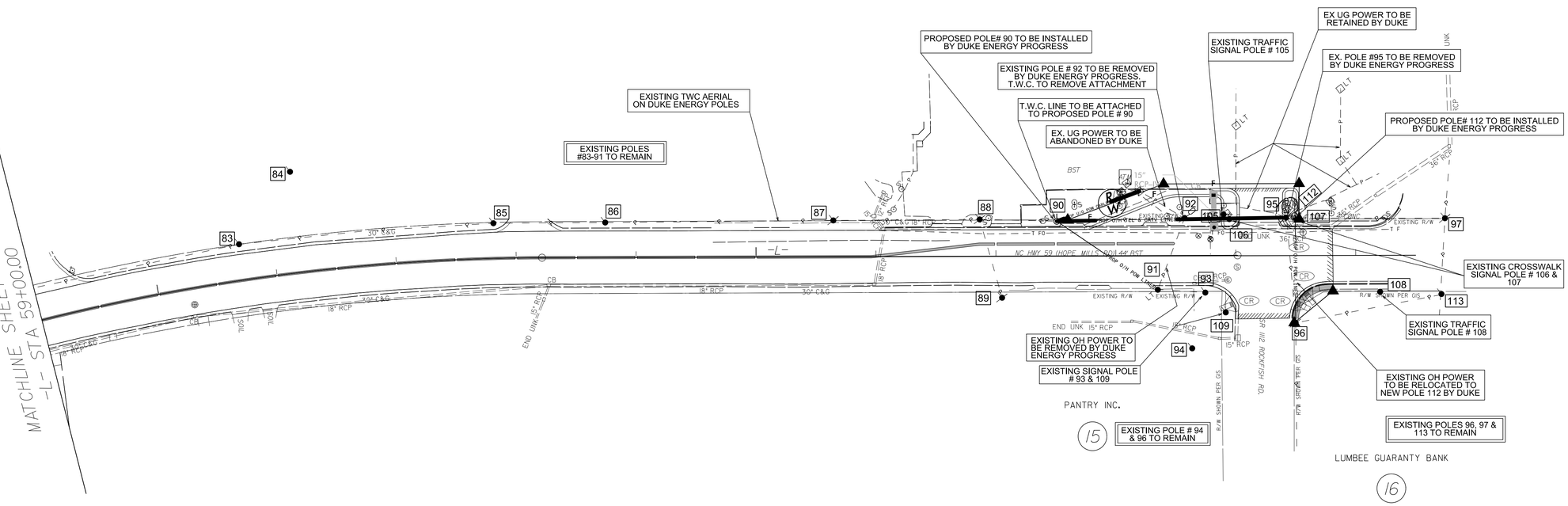

50 25 0 50 100

LEGEND

- EXISTING JOINT POWER AND TELEPHONE POLE
- EXISTING TELEPHONE POLE
- PROPOSED TELEPHONE AND CATV POLE
- EXISTING POWER POLE
- PROPOSED POWER POLE
- EXISTING OVERHEAD POWER LINES
- PROP O/H POW LINES — PROPOSED OVERHEAD POWER LINES
- EXISTING OVERHEAD TELEPHONE LINES
- PROP O/H (FO) CATV LINES — PROPOSED OVERHEAD CATV LINES
- PROP O/H POW & CATV LINES — PROPOSED OVERHEAD POWER & CATV CATV LINES
- PROP O/H TEL & CATV LINES — PROPOSED OVERHEAD TELEPHONE & CATV LINES
- PROP U/G TEL CABLES — PROPOSED UNDERGROUND TELEPHONE CABLES
- EXISTING UNDERGROUND TELEPHONE CABLE
- PROP U/G CATV CABLES — PROPOSED UNDERGROUND CATV CABLES
- EXISTING UNDERGROUND CATV CABLE

5/14/99

PROJECT REFERENCE NO.	SHEET NO.
W-5206AA	U0-7

UTILITIES BY OTHERS

NOTE:
ALL PROPOSED UTILITY WORK SHOWN ON THIS SHEET WILL BE DONE BY OTHERS. NO PAYMENT WILL BE MADE TO THE CONTRACTOR FOR PROPOSED UTILITY WORK SHOWN ON THIS SHEET.

CH ENGINEERING
3220 GLEN ROYAL RD. RALEIGH, NC 27617
TELE 919.788.0224 FAX 919.788.0232
NC LICENSE #P-0189

CONTACT INFORMATION FOR UTILITIES

POWER: DUKE ENERGY PROGRESS; WAYNE AYCOCK (910)-620-1487 WAYNE.AYCOCK@DUKE-ENGERGY.COM
PHONE: CENTURYLINK; KEVIN GODWIN (910)-366-2142 KEVIN.GODWIN@CENTURYLINK.COM
CABLE: TIME WARNER CABLE; JACK CRABB (910)-401-5034 JACK.CRABB@TWCABLE.COM
WATER & SEWER: FAYETTEVILLE PUBLIC WORKS COMMISION; JOHN ALLEN (910)-223-4734 JOHN.ALLEN@FAYPWC.COM
GAS: PIEDMONT NATURAL GAS (PNG); DOUGLAS WARD (910)-321-2908 DOUGLAS.WARD@PIEDMONTNG.COM

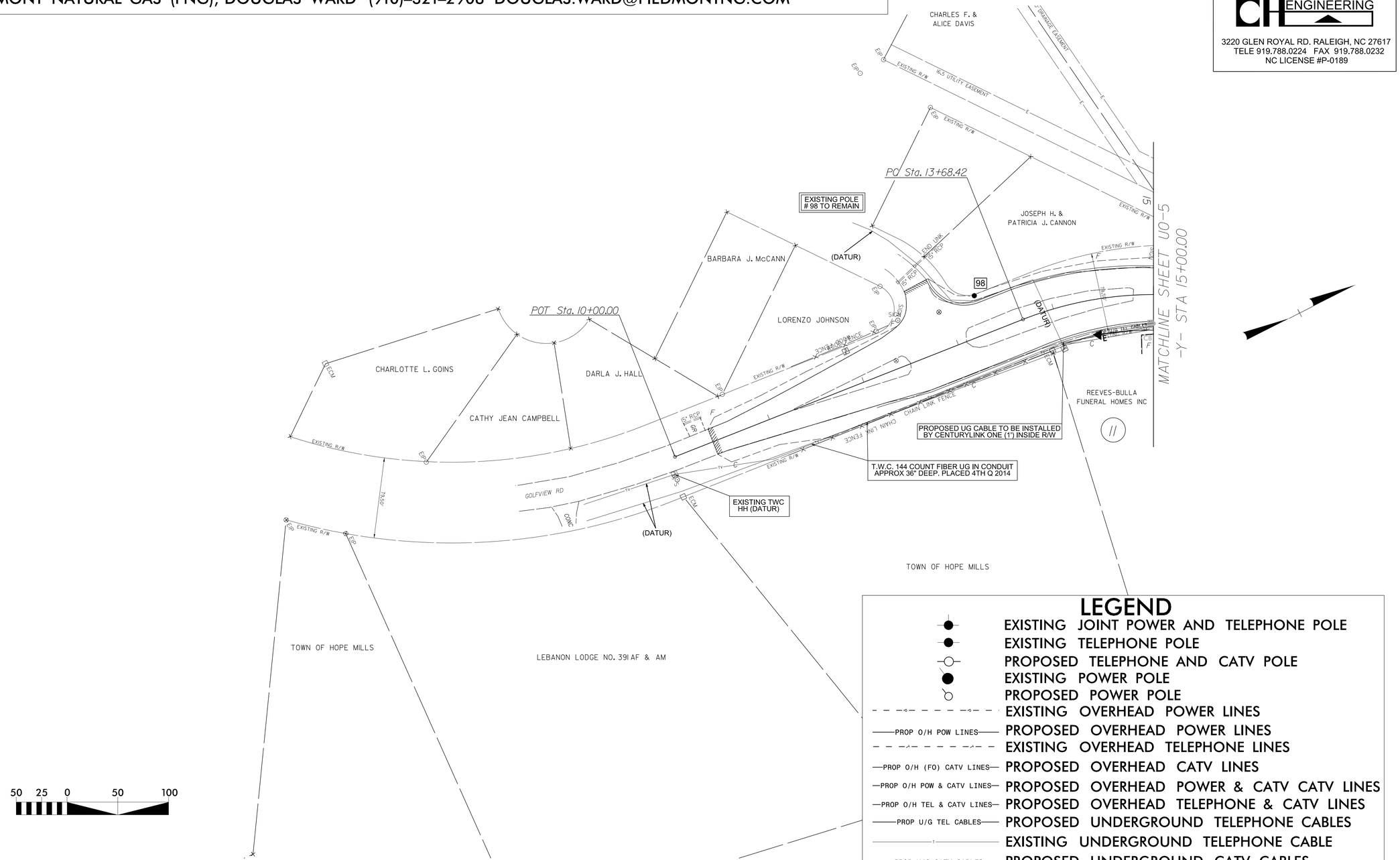

LEGEND

- EXISTING JOINT POWER AND TELEPHONE POLE
- EXISTING TELEPHONE POLE
- PROPOSED TELEPHONE AND CATV POLE
- EXISTING POWER POLE
- PROPOSED POWER POLE
- EXISTING OVERHEAD POWER LINES
- PROP O/H POW LINES — PROPOSED OVERHEAD POWER LINES
- EXISTING OVERHEAD TELEPHONE LINES
- PROP O/H (FO) CATV LINES — PROPOSED OVERHEAD CATV LINES
- PROP O/H POW & CATV LINES — PROPOSED OVERHEAD POWER & CATV CATV LINES
- PROP O/H TEL & CATV LINES — PROPOSED OVERHEAD TELEPHONE & CATV LINES
- PROP U/G TEL CABLES — PROPOSED UNDERGROUND TELEPHONE CABLES
- EXISTING UNDERGROUND TELEPHONE CABLE
- PROP U/G CATV CABLES — PROPOSED UNDERGROUND CATV CABLES
- EXISTING UNDERGROUND CATV CABLE

PROJECT REFERENCE NO.	SHEET NO.
W-5206AA	X-1
R/W SHEET NO.	

CROSS-SECTION SUMMARY

Station L	Uncl. Exc. (cu. yd.)	Embt (cu. yd.)
10+51.58	0	0
11+00.0	39	0
11+21.0	19	0
21+88.0	0	0
22+00.0	2	1
22+50.0	14	21
22+75.6	4	10
29+10	0	0
29+50	8	0
43+37.62	0	0
43+50.0	3	0
44+00.0	19	0
44+50.0	28	0
45+00.0	28	0
45+50.0	31	1
46+00.0	43	1
46+43.08	30	0
46+65.5	0	0
47+00.0	25	2
47+50.0	26	1
47+64.09	9	0
48+17.0	0	0
48+50.0	19	3
49+00.0	29	3
49+50.0	38	1
50+00.0	44	0
50+50.0	67	0
51+00.0	73	0
51+50.0	53	0
52+00.0	43	0
52+50.0	48	0
53+00.0	35	0
53+50.0	23	2
53+90.9	7	1
67+74.0	0	0
68+00.0	8	0
68+50.0	56	0
69+03.0	57	15
69+46.7	0	0
69+50.0	2	1
69+80.9	1	1

Station Y	Uncl. Exc. (cu. yd.)	Embt (cu. yd.)
10+40.0	0	0
10+50.0	14	0
11+00.0	24	0
11+50.0	41	0
12+00.0	56	0
12+50.0	61	0
13+00.0	70	5
13+50.0	79	6
14+00.0	81	3
14+50.0	69	4
15+00.0	50	6
15+50.0	31	15
16+00.0	16	27
16+50.0	20	26
17+00.0	68	11
17+19.0	26	4

5/14/99
3/2/2005
W5206A_rdy_X-1 SUMMARY.dgn

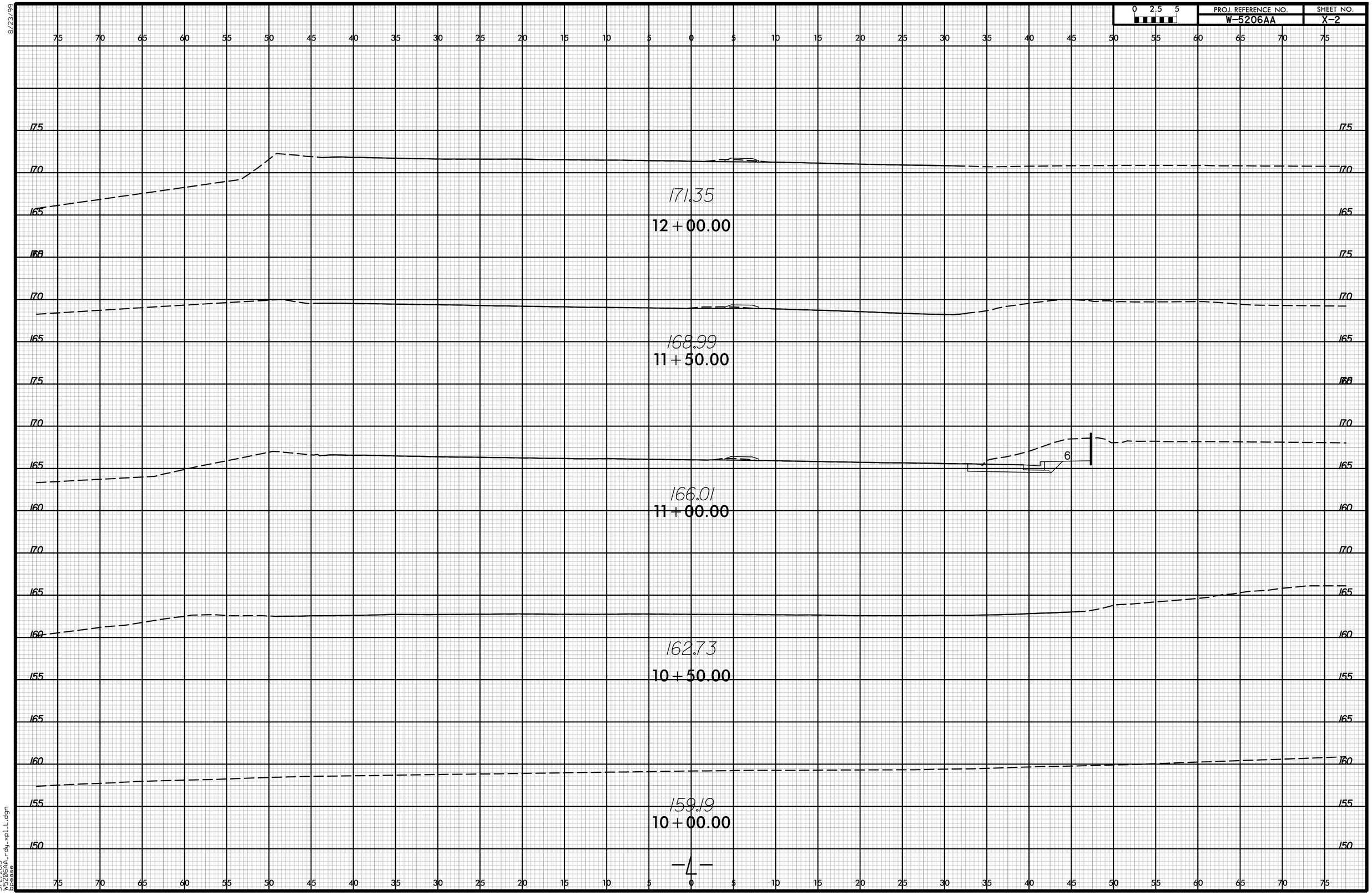

8/23/99

3/2/2015
W5206AA_rdy_xpl_L.dgn
bpease

8/23/99

0 2.5 5	PROJ. REFERENCE NO.	SHEET NO.
	W-5206AA	X-3

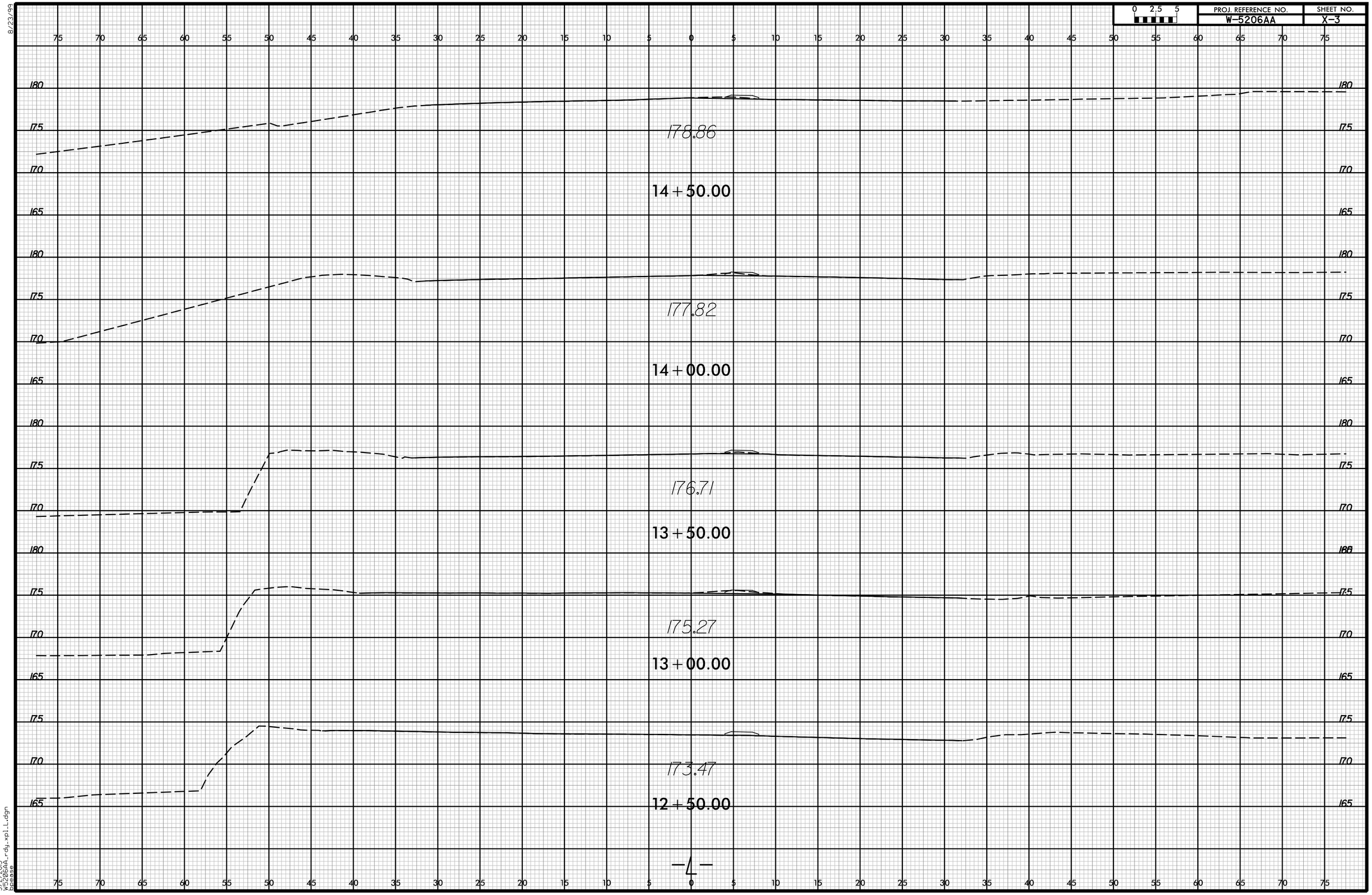

3/2/2015
W5206AA_rdy_xpl_L.dgn
bpease

8/23/99

0 2.5 5	PROJ. REFERENCE NO.	SHEET NO.
	W-5206AA	X-4

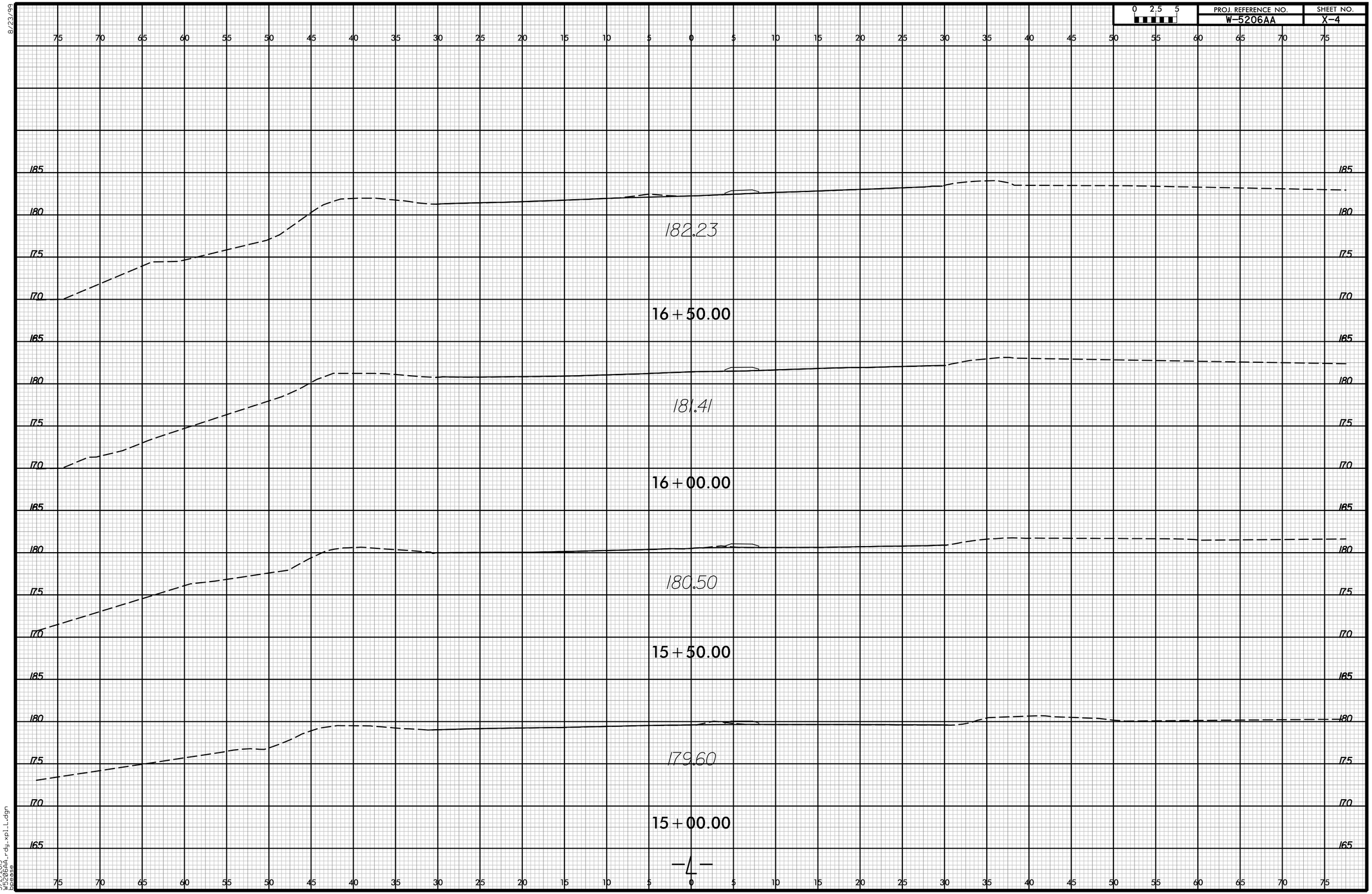

-4-

3/2/2015
W5206AA_rdy_xpl_L.dgn
bpease

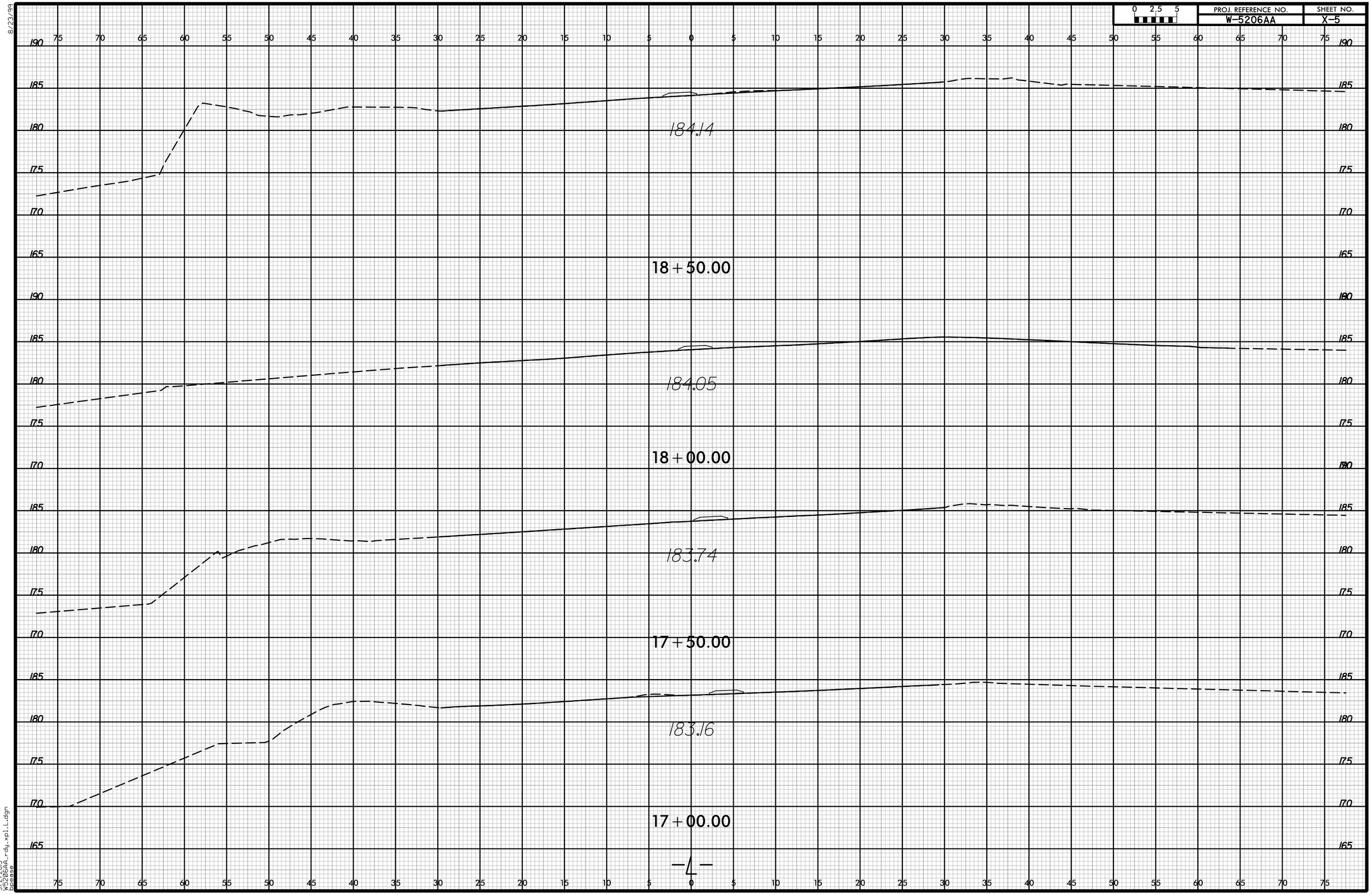
0 2.5 5
PROJ. REFERENCE NO.
W-5206AA
SHEET NO.
X-5
8/23/99
18+50.00
184.14
184.05
18+00.00
183.74
17+50.00
183.16
17+00.00
-4-
3/2/2015
W5206AA_rdy_xpl_L.dgn
bpease

8/23/99

0 2.5 5	PROJ. REFERENCE NO.	SHEET NO.
	W-5206AA	X-6

3/2/2015
W5206AA_rdy_xpl_L.dgn
bpease

8/23/99

0 2.5 5	PROJ. REFERENCE NO.	SHEET NO.
	W-5206AA	X-7

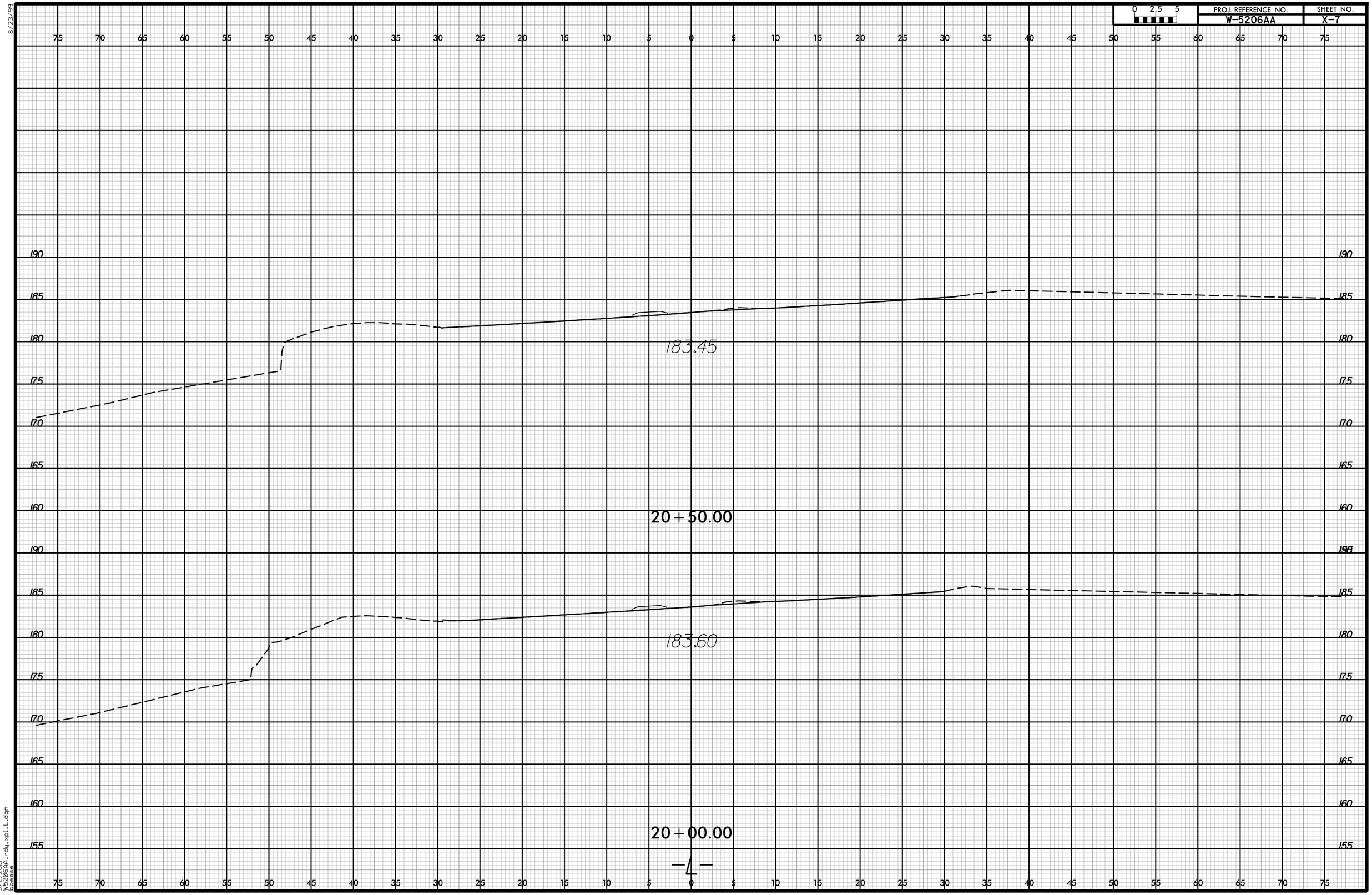

3/2/2015
W5206AA_rdy_xpl_L.dgn
bpease

8/23/99

0 2.5 5	PROJ. REFERENCE NO.	SHEET NO.
	W-5206AA	X-8

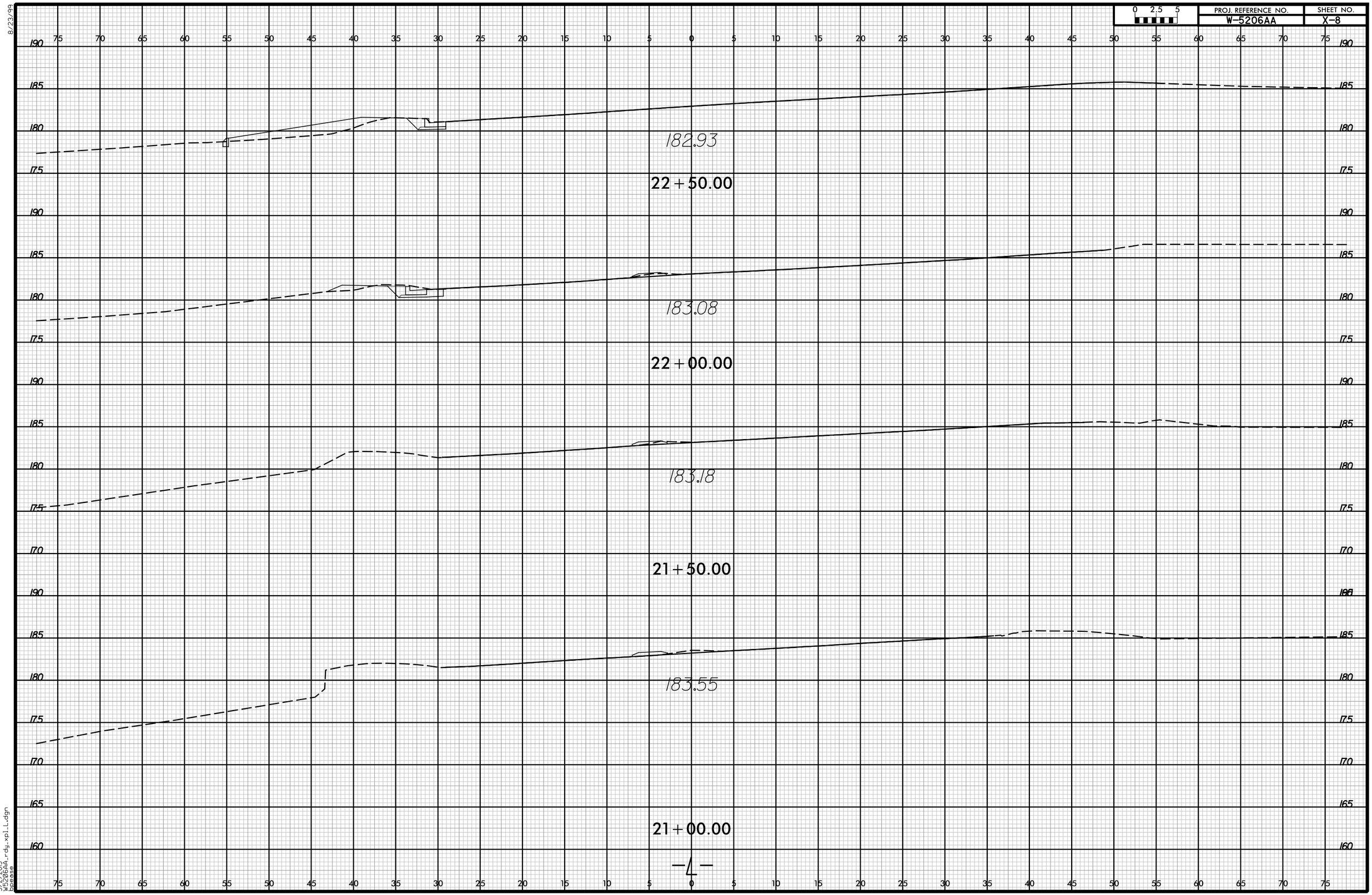

3/2/2015
W5206AA_rdy_xpl_L.dgn
bpease

8/23/99

0 2.5 5	PROJ. REFERENCE NO.	SHEET NO.
	W-5206AA	X-9

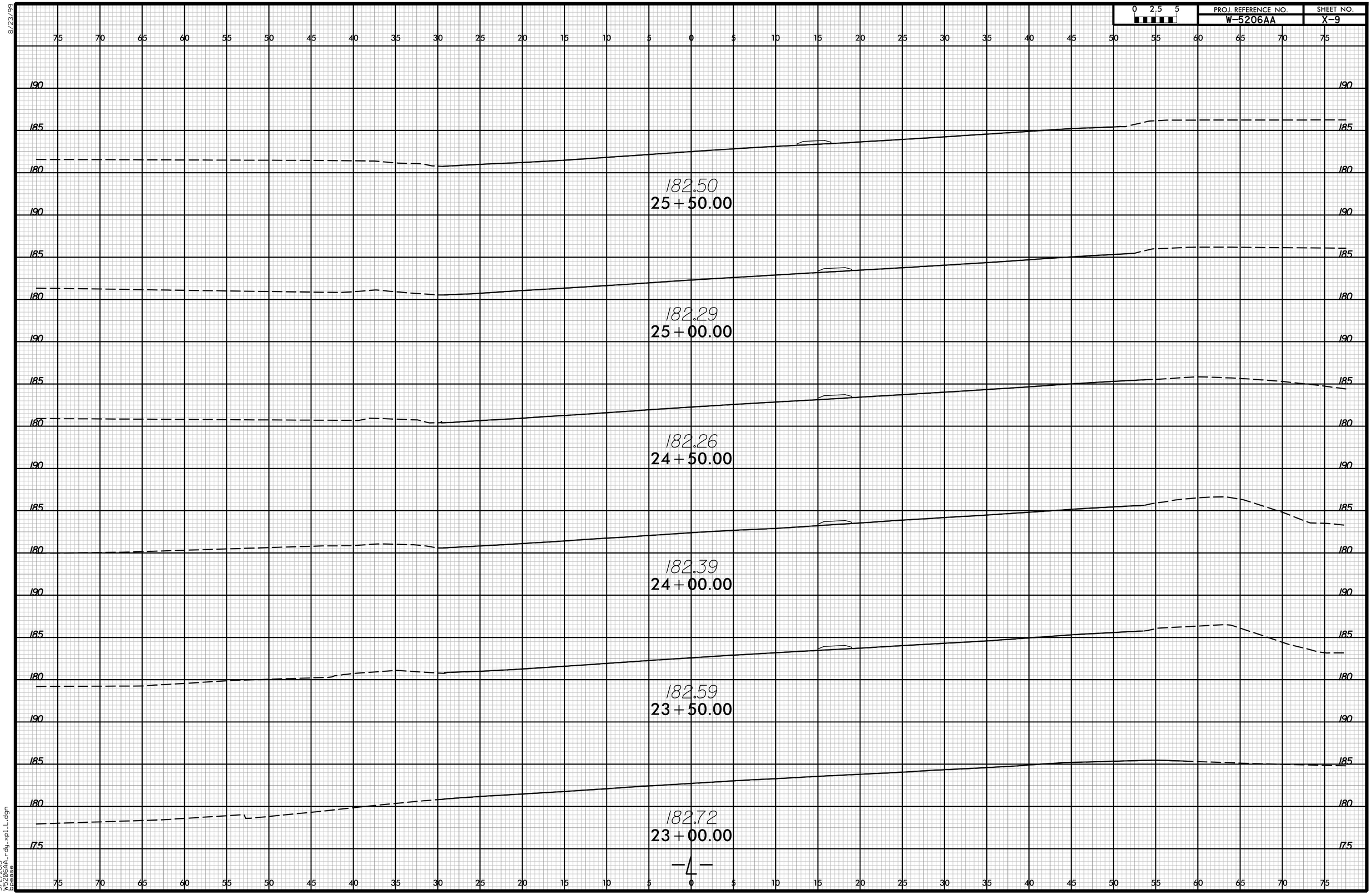

3/2/2015
W5206AA_rdy_xpl_L.dgn
bpease

8/23/99

0 2.5 5	PROJ. REFERENCE NO.	SHEET NO.
	W-5206AA	X-10

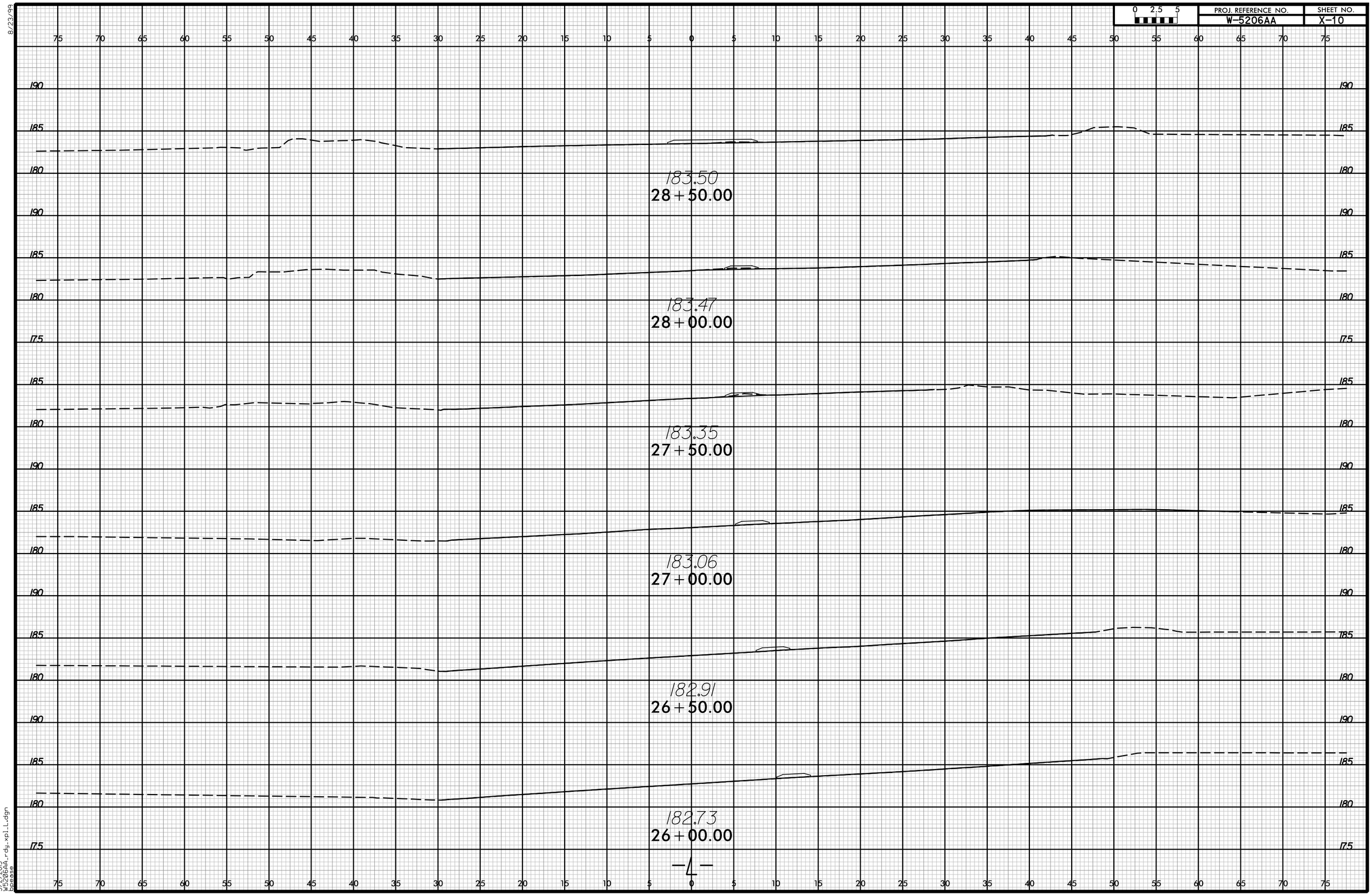

3/2/2015
W5206AA_rdy_xpl_L.dgn
bpease

8/23/99

0 2.5 5	PROJ. REFERENCE NO.	SHEET NO.
	W-5206AA	X-11

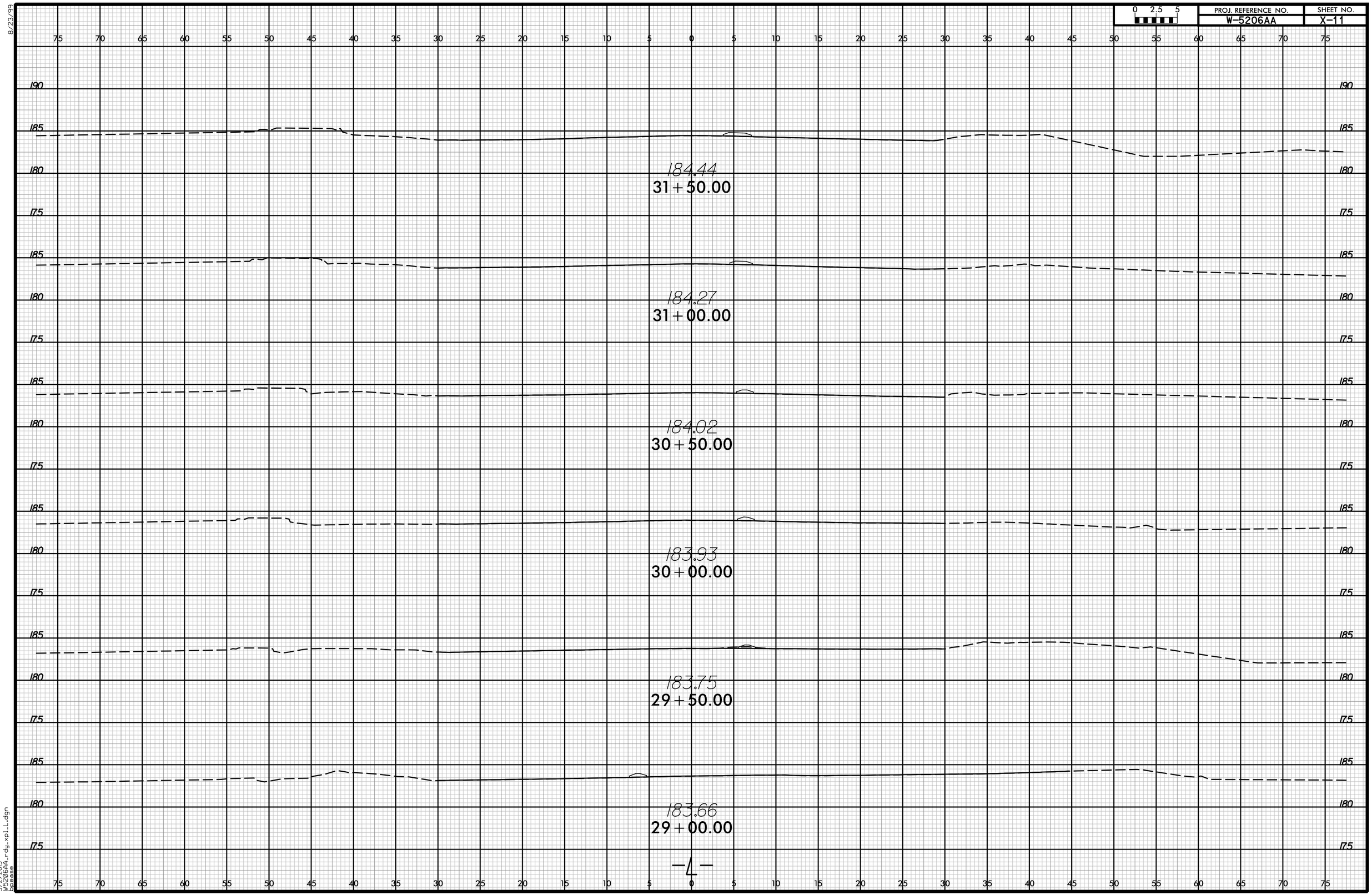

3/2/2015
W5206AA_rdy_xpl_L.dgn
bpease

8/23/99

0 2.5 5	PROJ. REFERENCE NO.	SHEET NO.
	W-5206AA	X-12

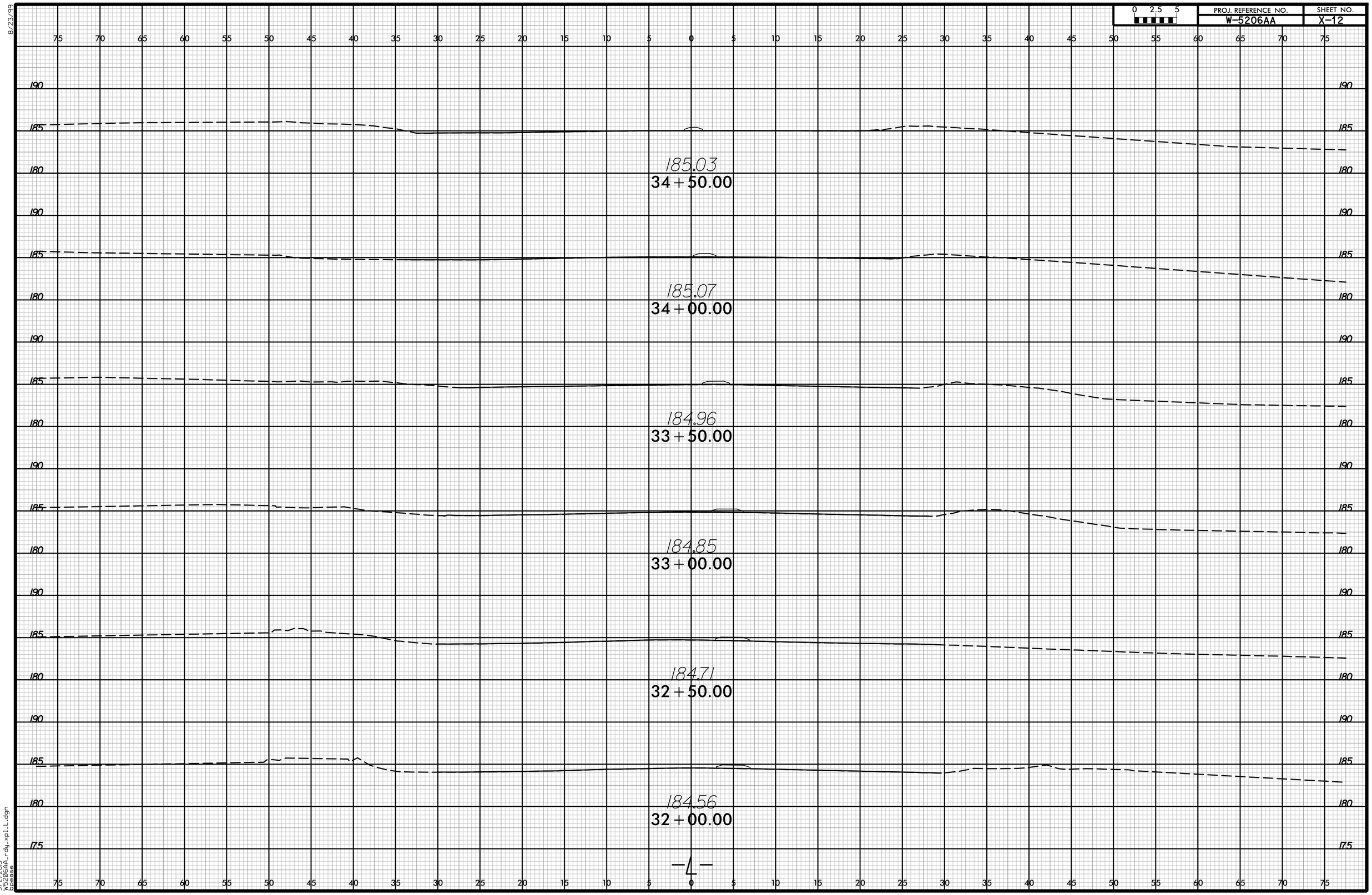

3/2/2015
W5206AA_rdy_xpl_L.dgn
bpease

8/23/99

0 2.5 5	PROJ. REFERENCE NO.	SHEET NO.
	W-5206AA	X-13

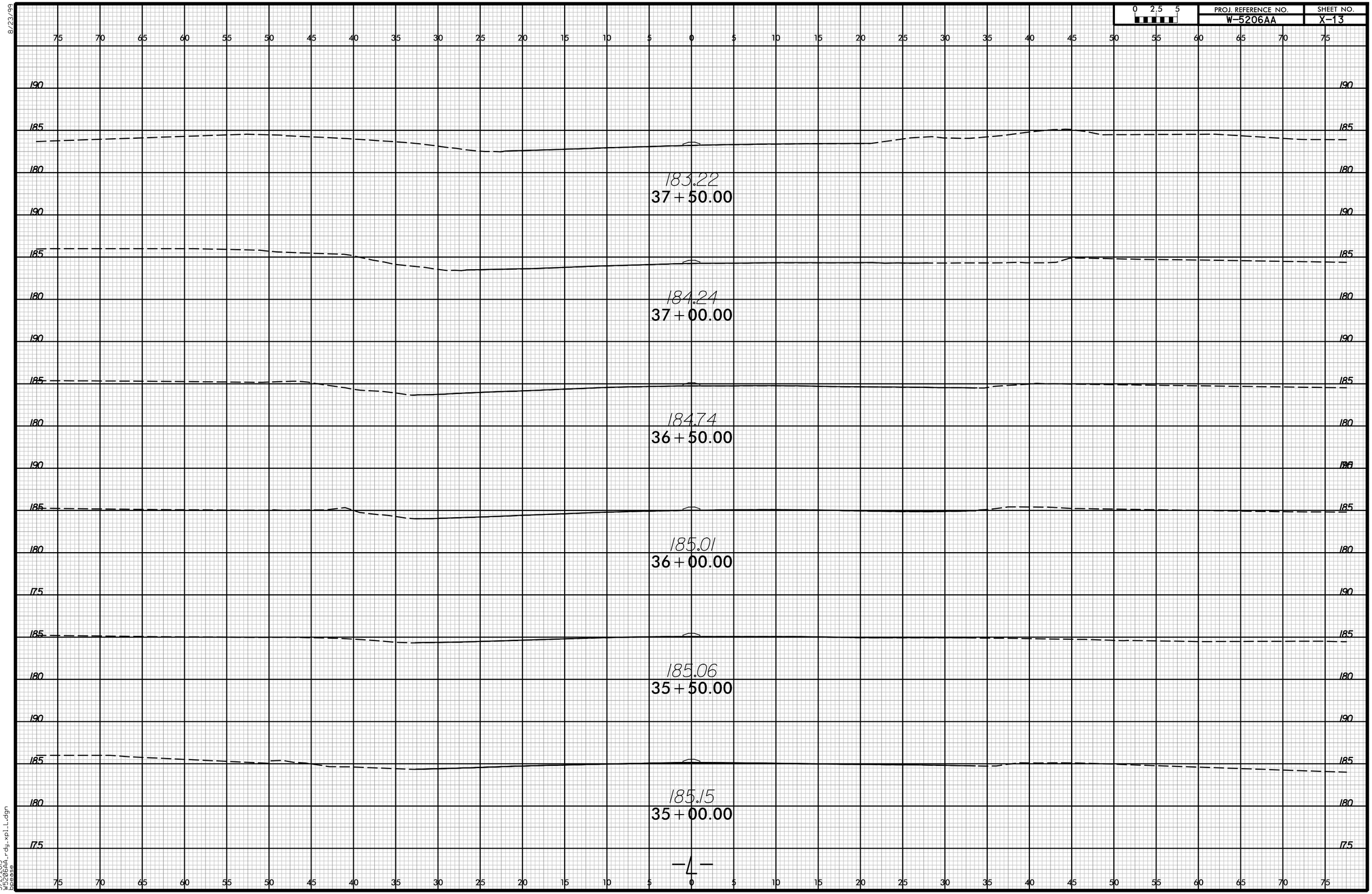

-4-

3/2/2015
W5206AA_rdy_xpl_L.dgn
bpease

8/23/99

0 2.5 5	PROJ. REFERENCE NO.	SHEET NO.
	W-5206AA	X-14

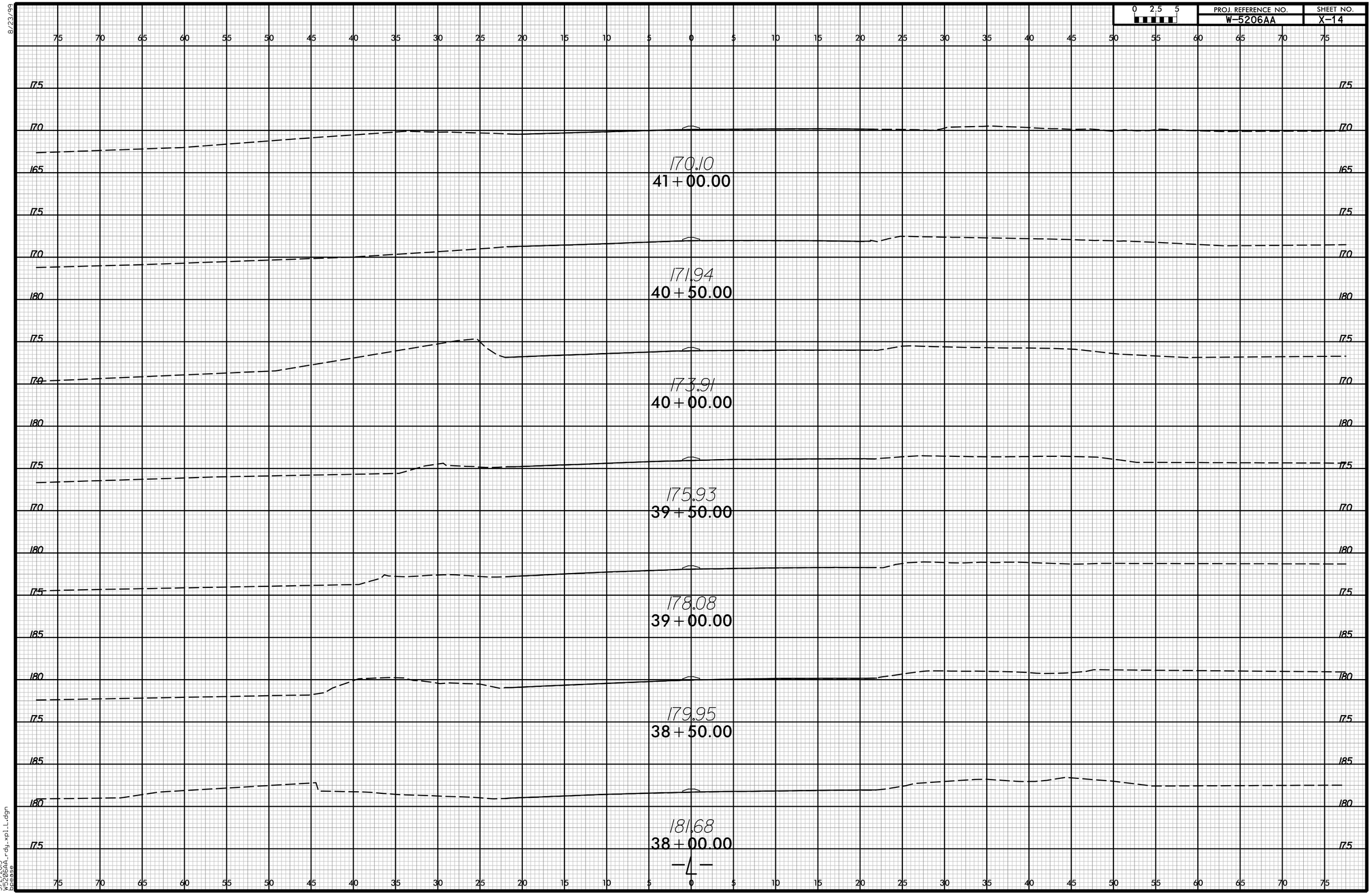

3/2/2015
W5206AA_rdy_xpl_L.dgn
bpease

8/23/99

0 2.5 5	PROJ. REFERENCE NO.	SHEET NO.
	W-5206AA	X-15

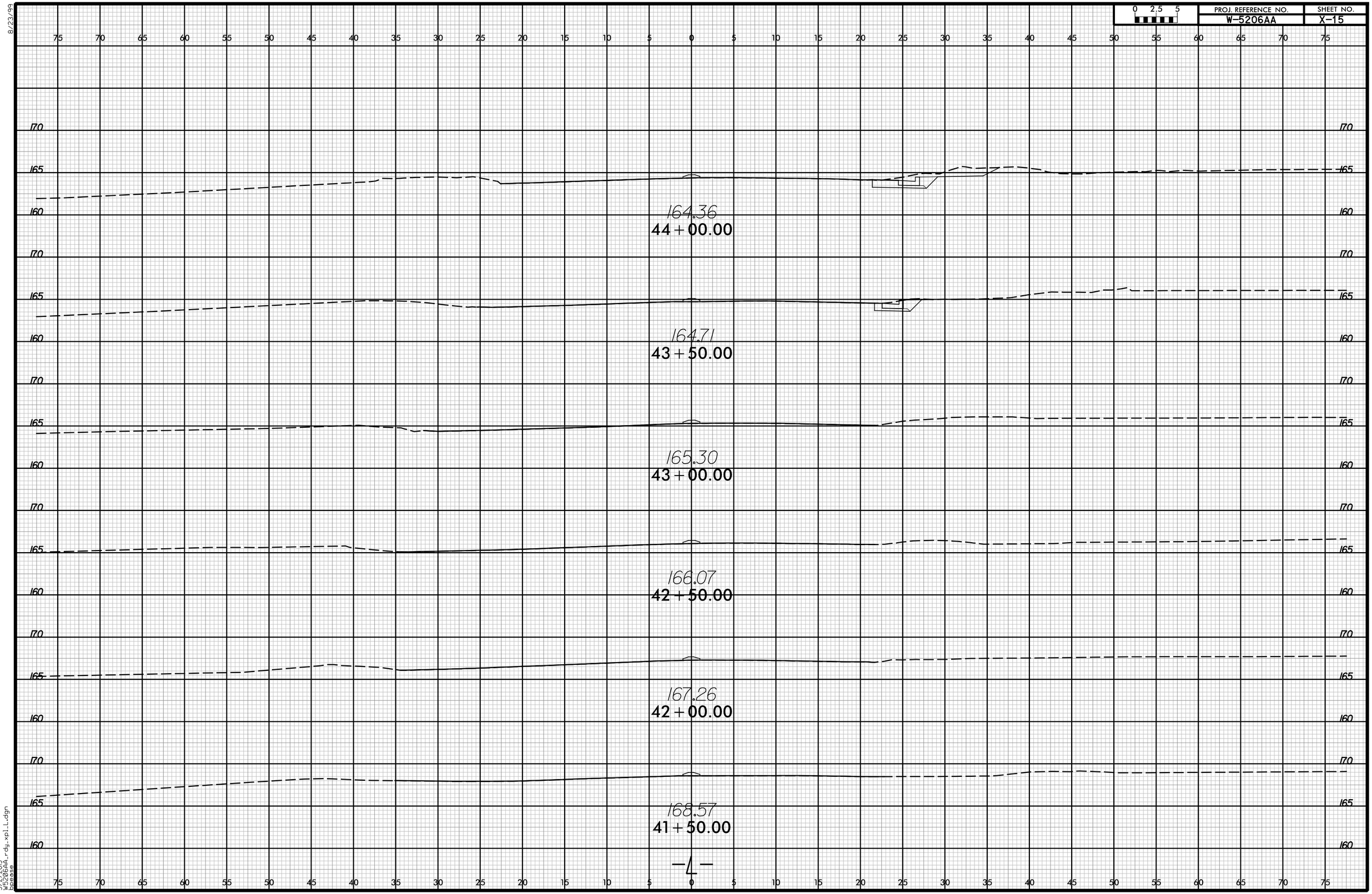

3/2/2015
W5206AA_rdy_xpl_L.dgn
bpease

8/23/99

0 2.5 5	PROJ. REFERENCE NO.	SHEET NO.
	W-5206AA	X-16

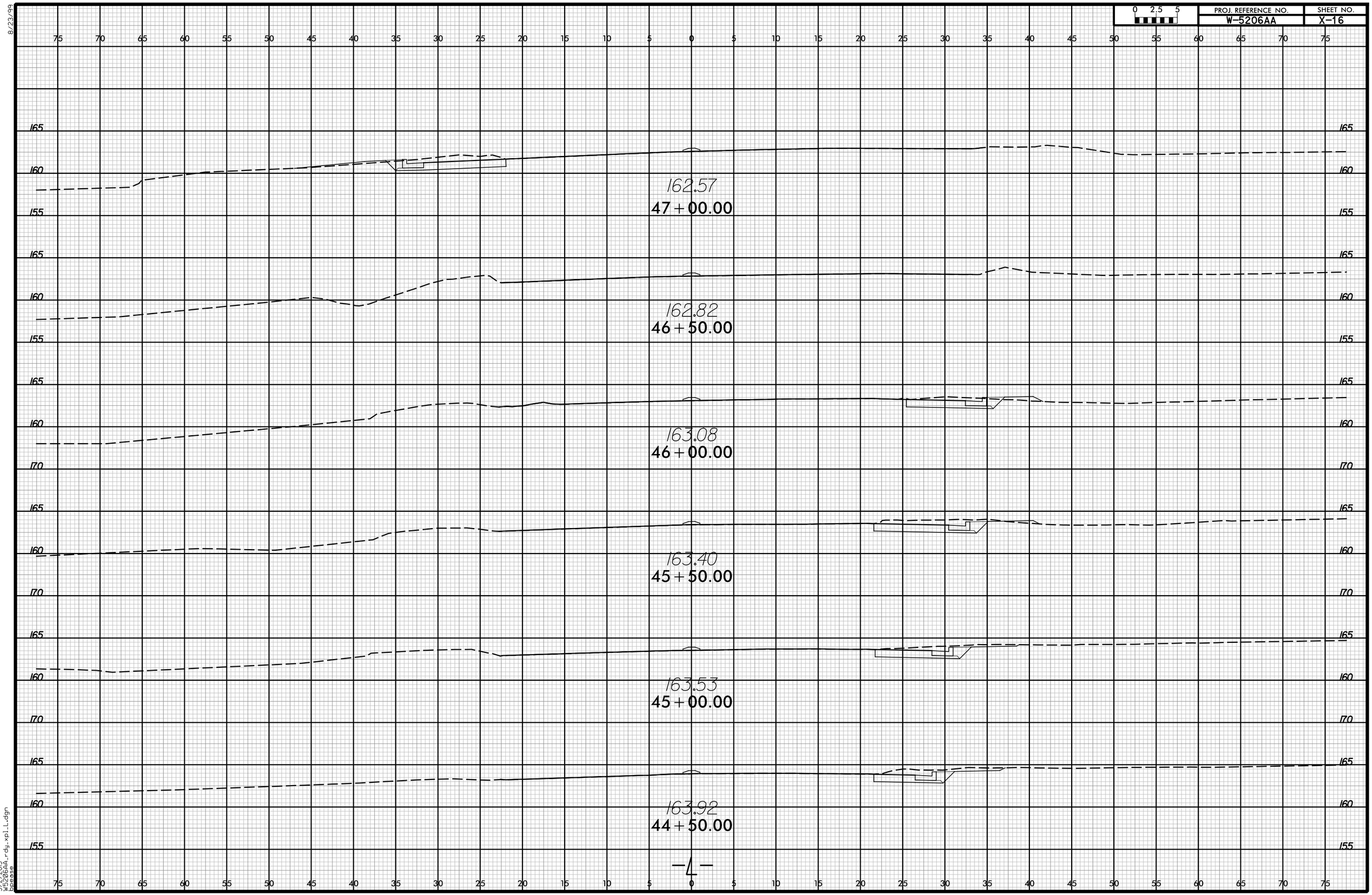

3/2/2015
W5206AA_rdy_xpl_L.dgn
bpease

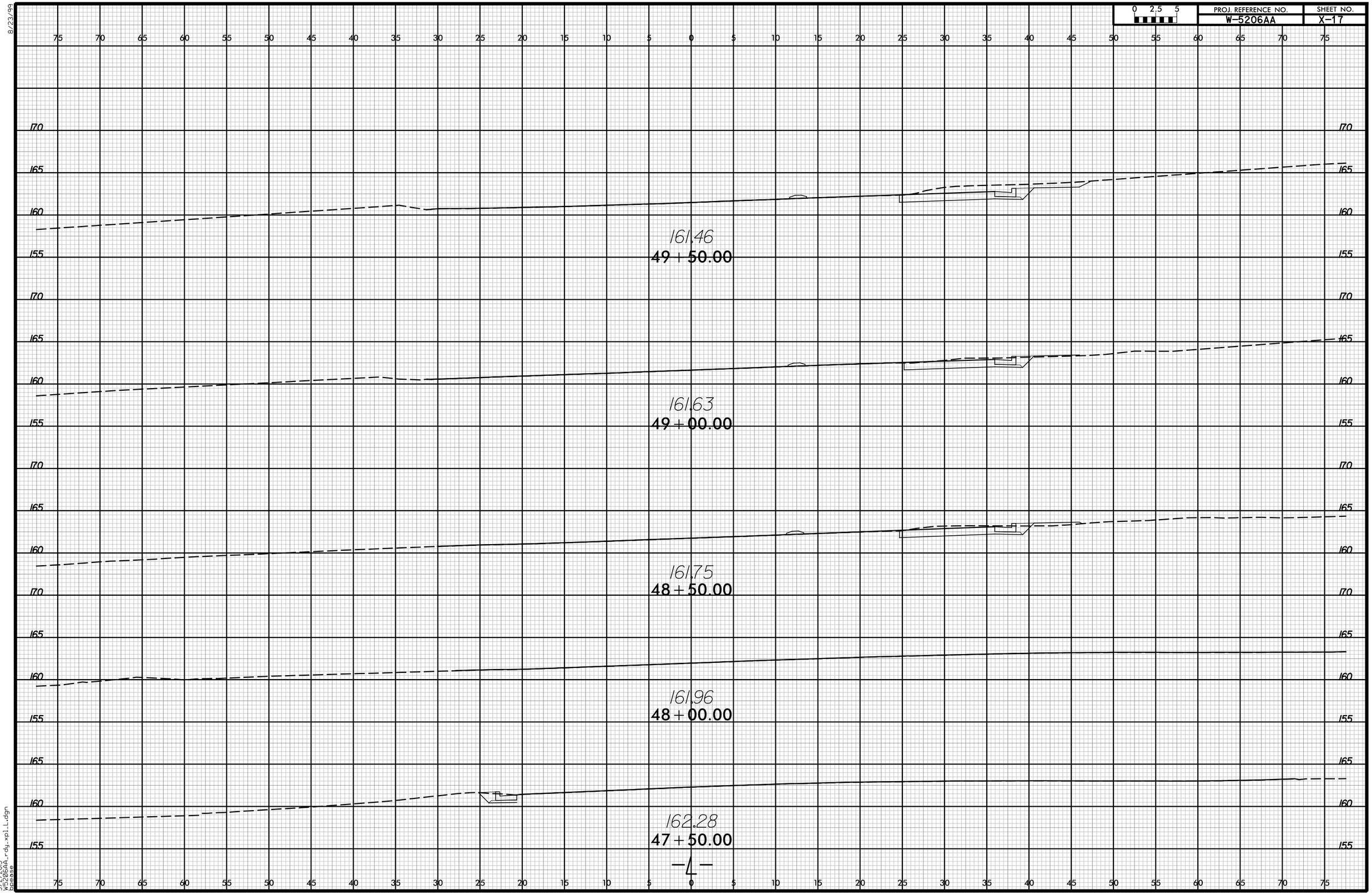
0 2.5 5
PROJ. REFERENCE NO.
W-5206AA
SHEET NO.
X-17
161.46
49 + 50.00
161.63
49 + 00.00
161.75
48 + 50.00
161.96
48 + 00.00
162.28
47 + 50.00
-L-
8/23/99
3/2/2015
W5206AA_rdy_xpl_L.dgn
bpease

8/23/99

0 2.5 5	PROJ. REFERENCE NO.	SHEET NO.
	W-5206AA	X-18

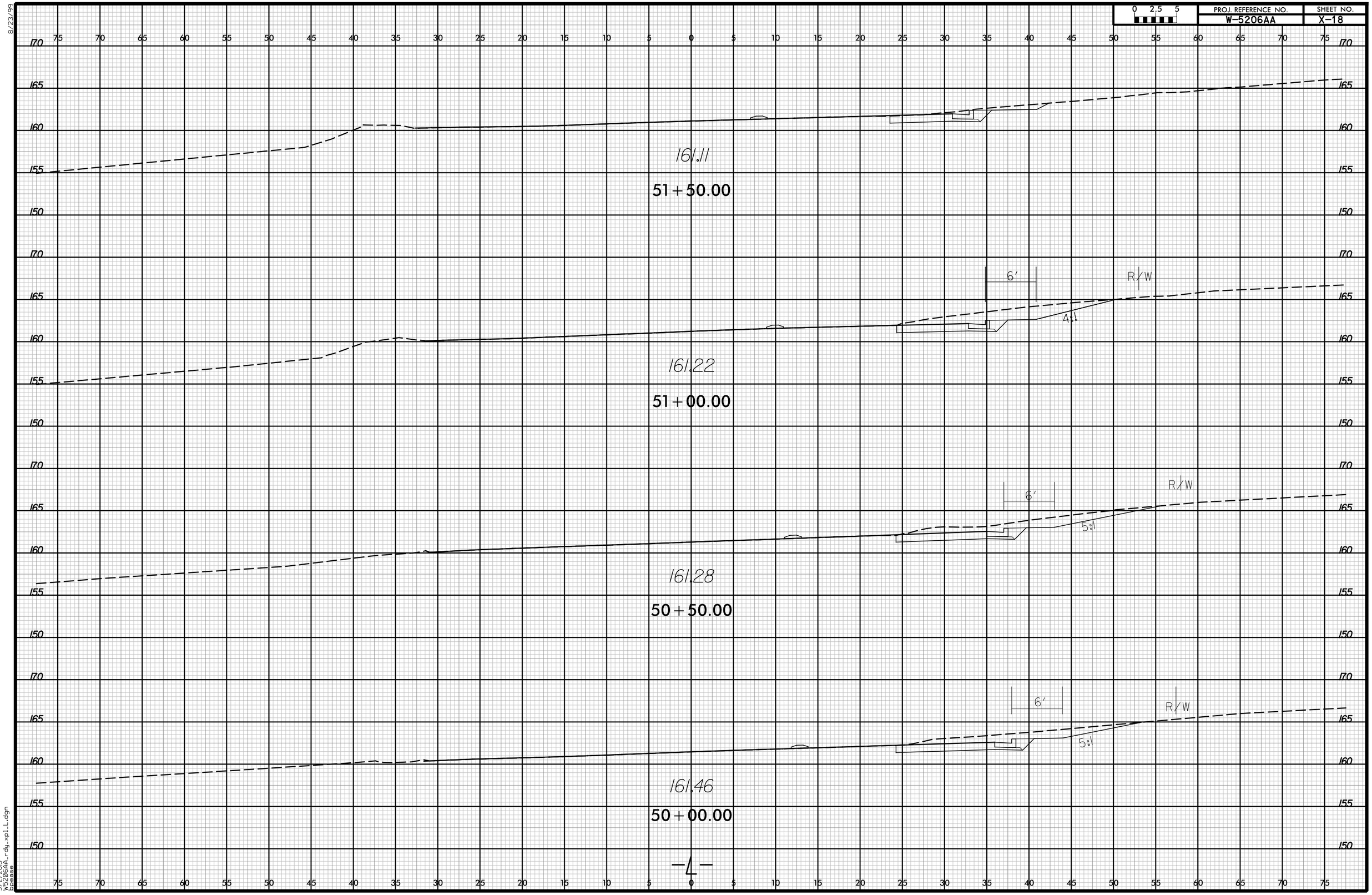

3/2/2015
W5206AA_rdy_xpl_L.dgn
bpease

8/23/99

0 2.5 5	PROJ. REFERENCE NO.	SHEET NO.
	W-5206AA	X-19

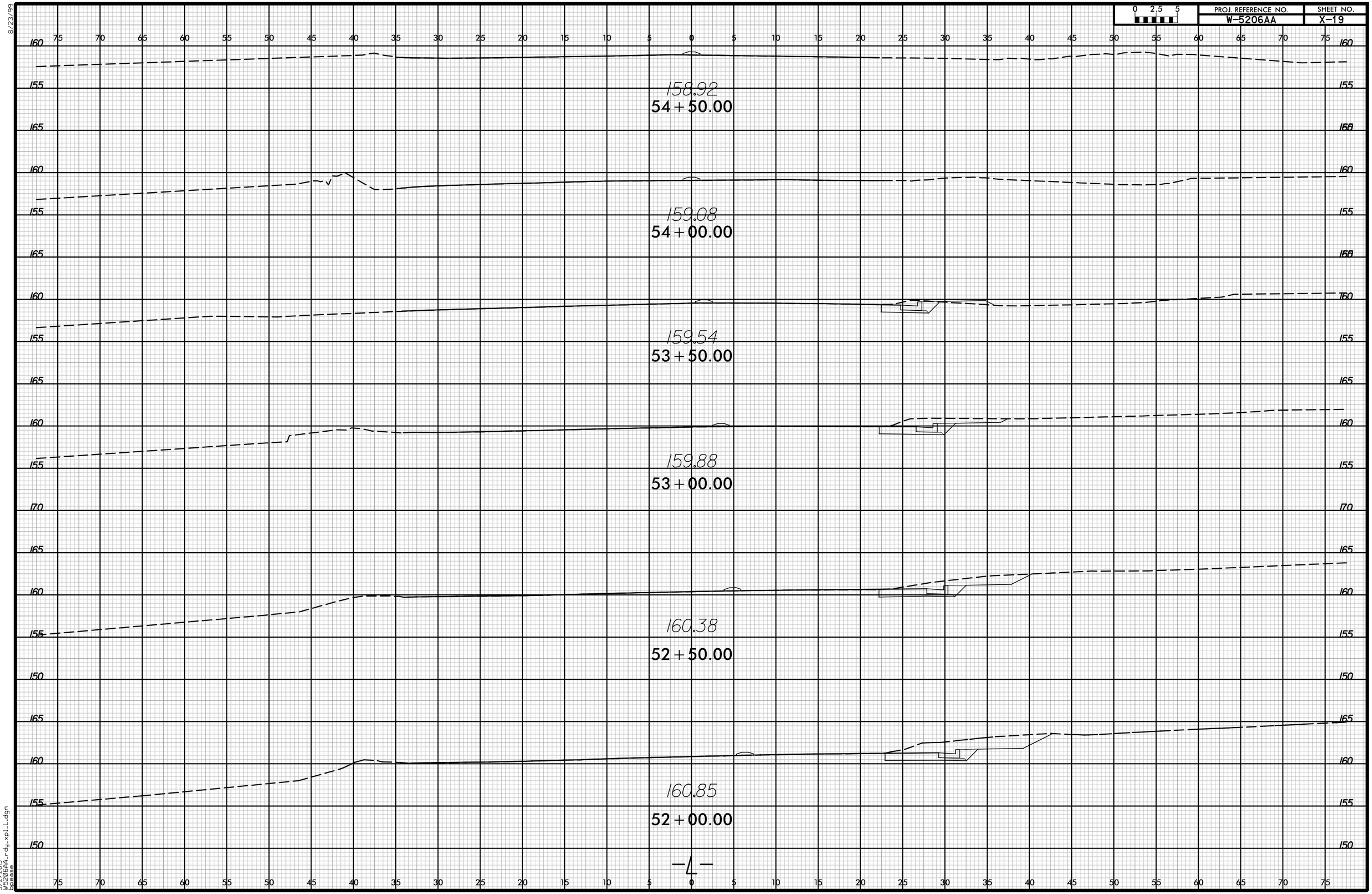

3/2/2015
W5206AA_rdy_xpl_L.dgn
spease

8/23/99

0 2.5 5	PROJ. REFERENCE NO.	SHEET NO.
	W-5206AA	X-20

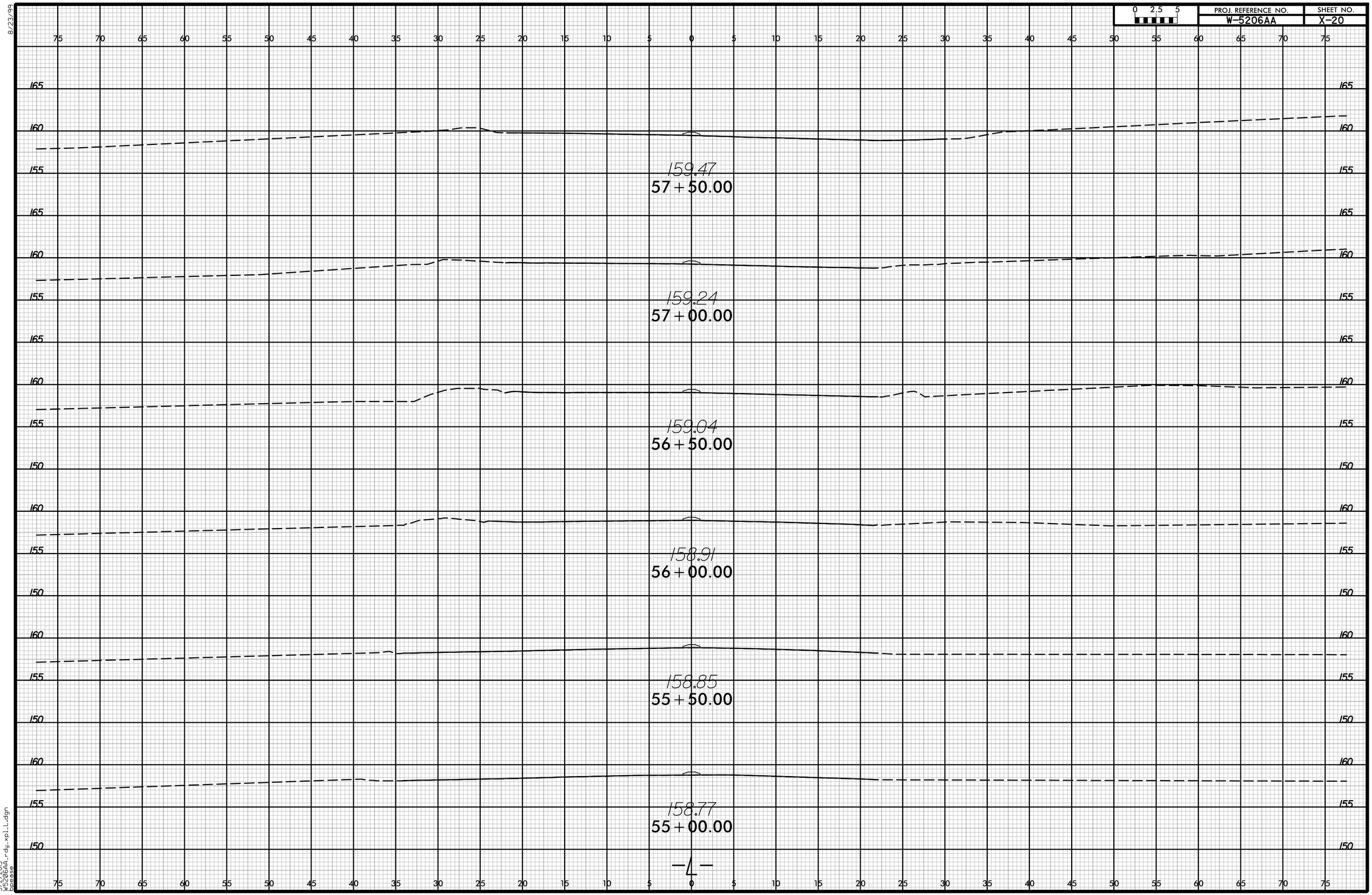

3/2/2015
W5206AA_rdy_xpl_L.dgn
bpease

8/23/99

0 2.5 5	PROJ. REFERENCE NO.	SHEET NO.
	W-5206AA	X-21

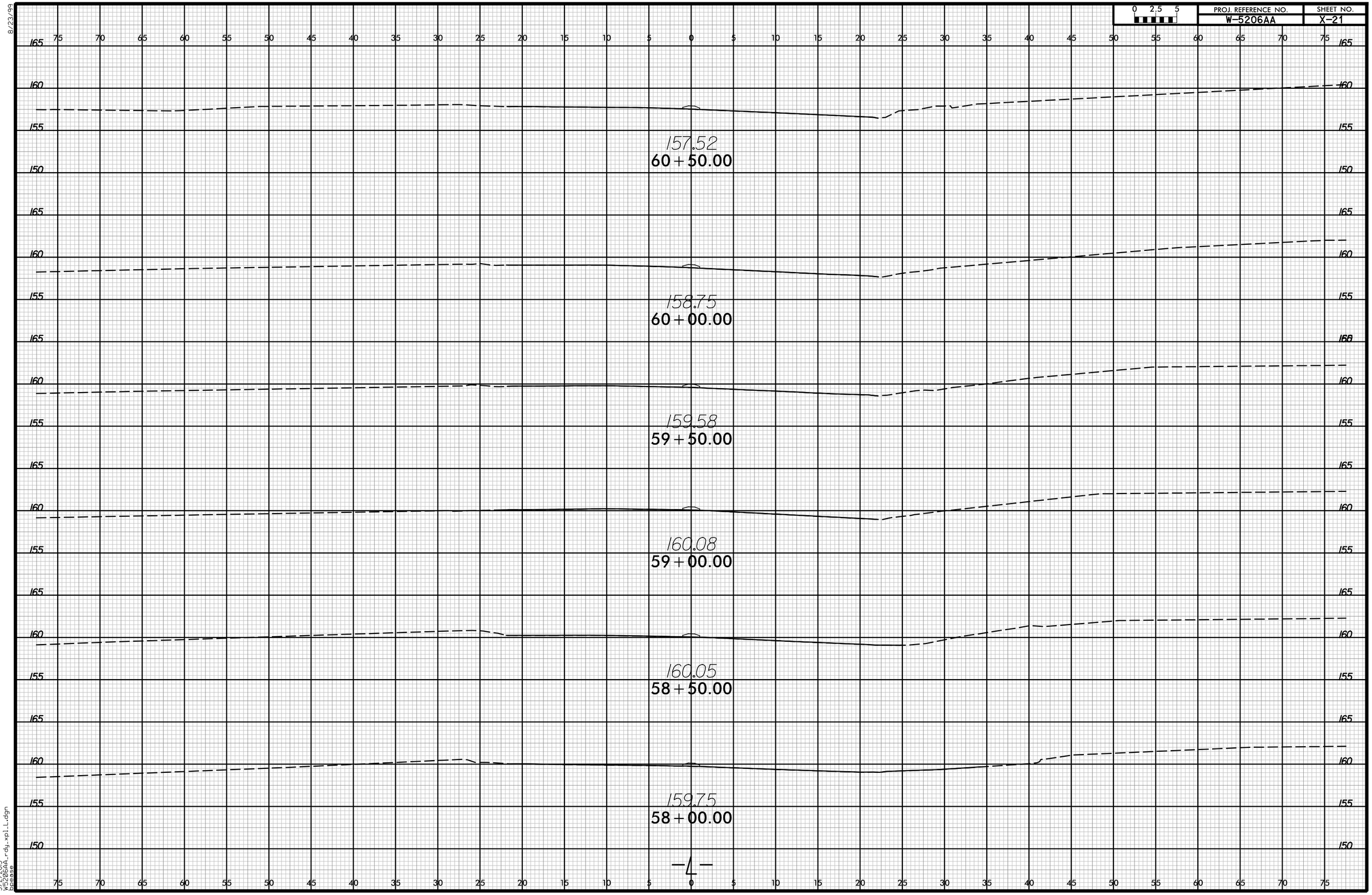

3/2/2015
W5206AA_rdy_xpl_L.dgn
bpease

8/23/99

PROJ. REFERENCE NO.	SHEET NO.
W-5206AA	X-22

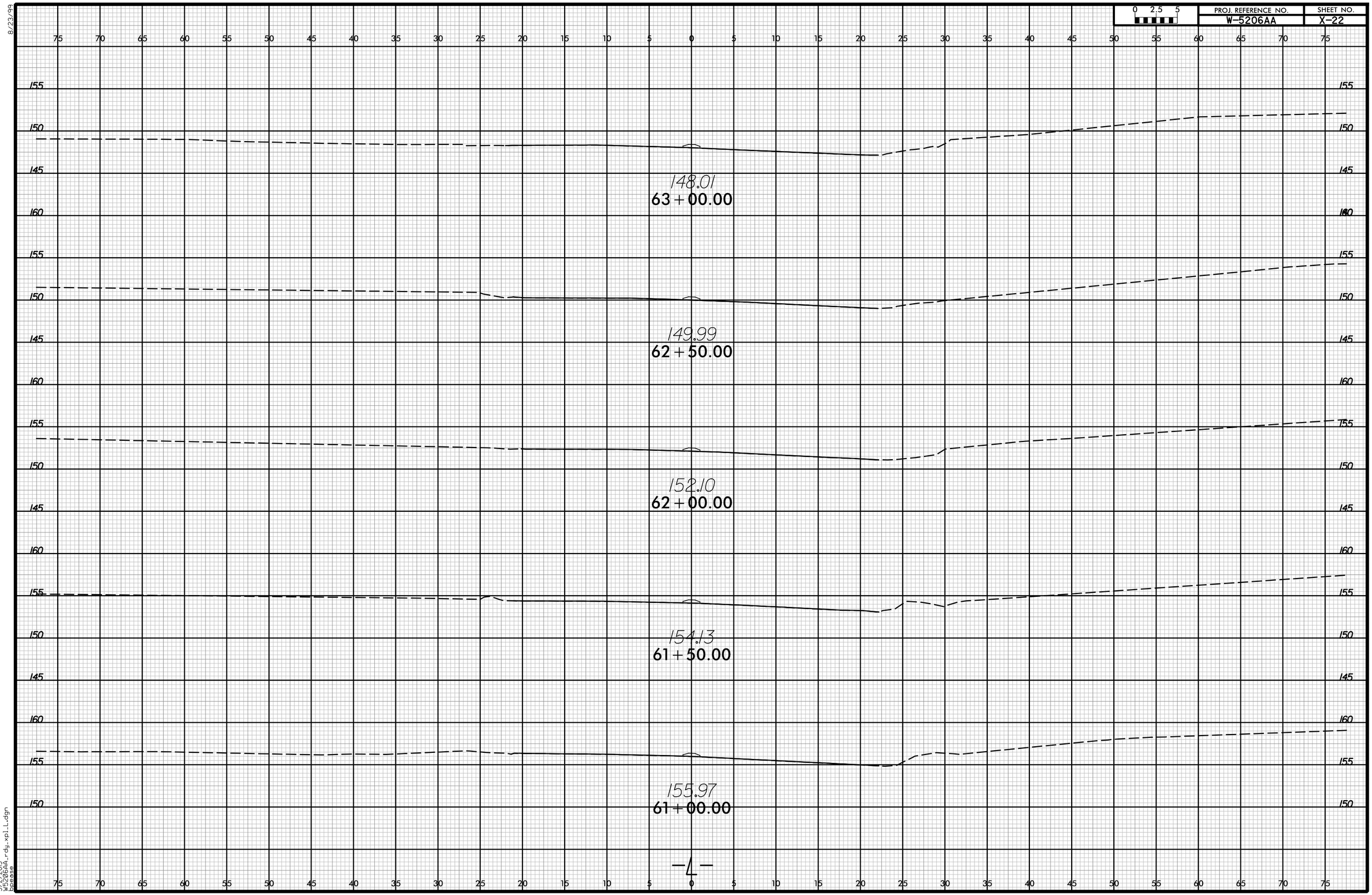

3/2/2015
W5206AA_rdy_xpl_L.dgn
bpease

8/23/99

0 2.5 5	PROJ. REFERENCE NO.	SHEET NO.
	W-5206AA	X-23

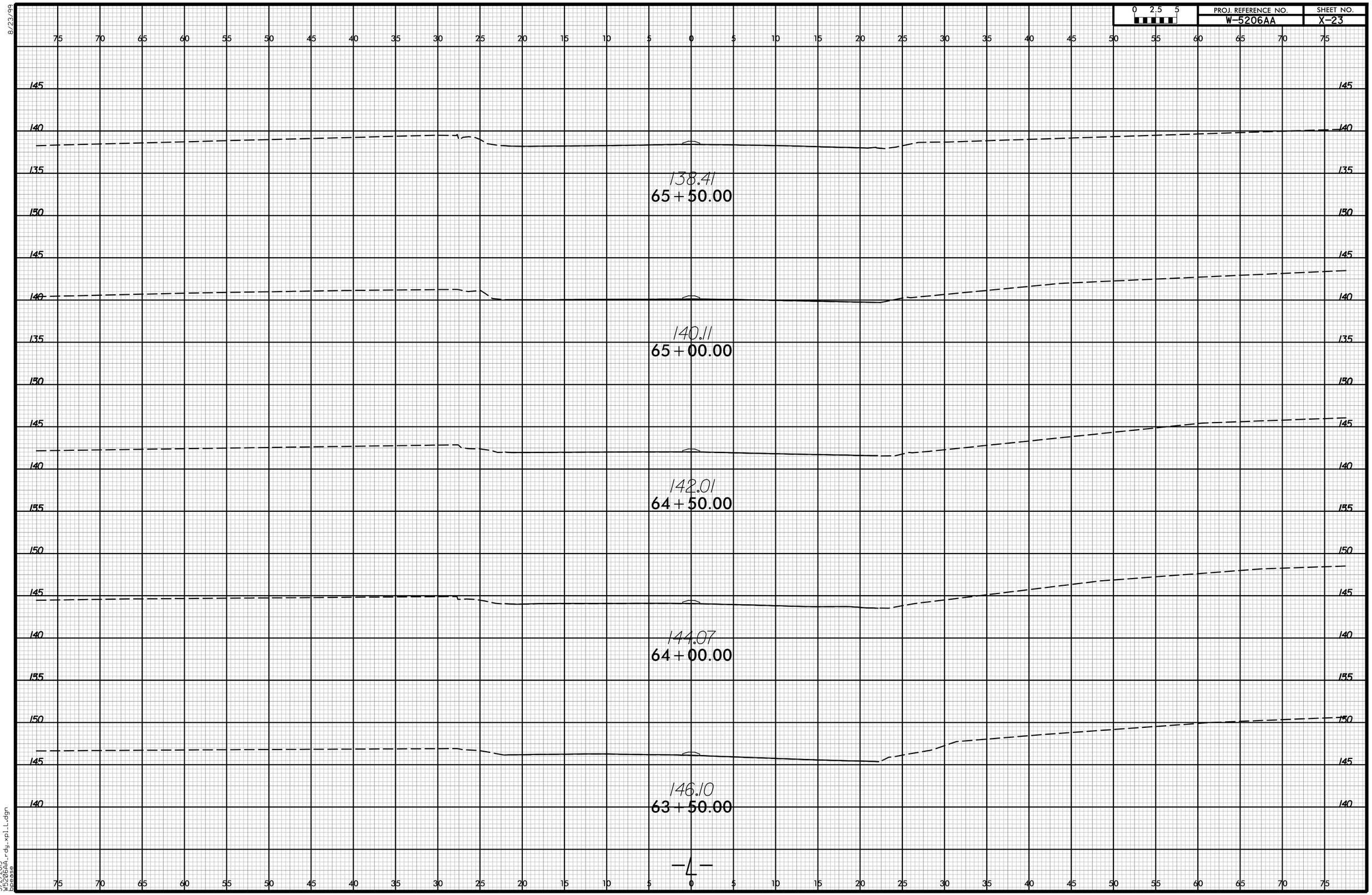

3/2/2015
W5206AA_rdy_xpl_L.dgn
bpease

8/23/99

0 2.5 5	PROJ. REFERENCE NO.	SHEET NO.
	W-5206AA	X-24

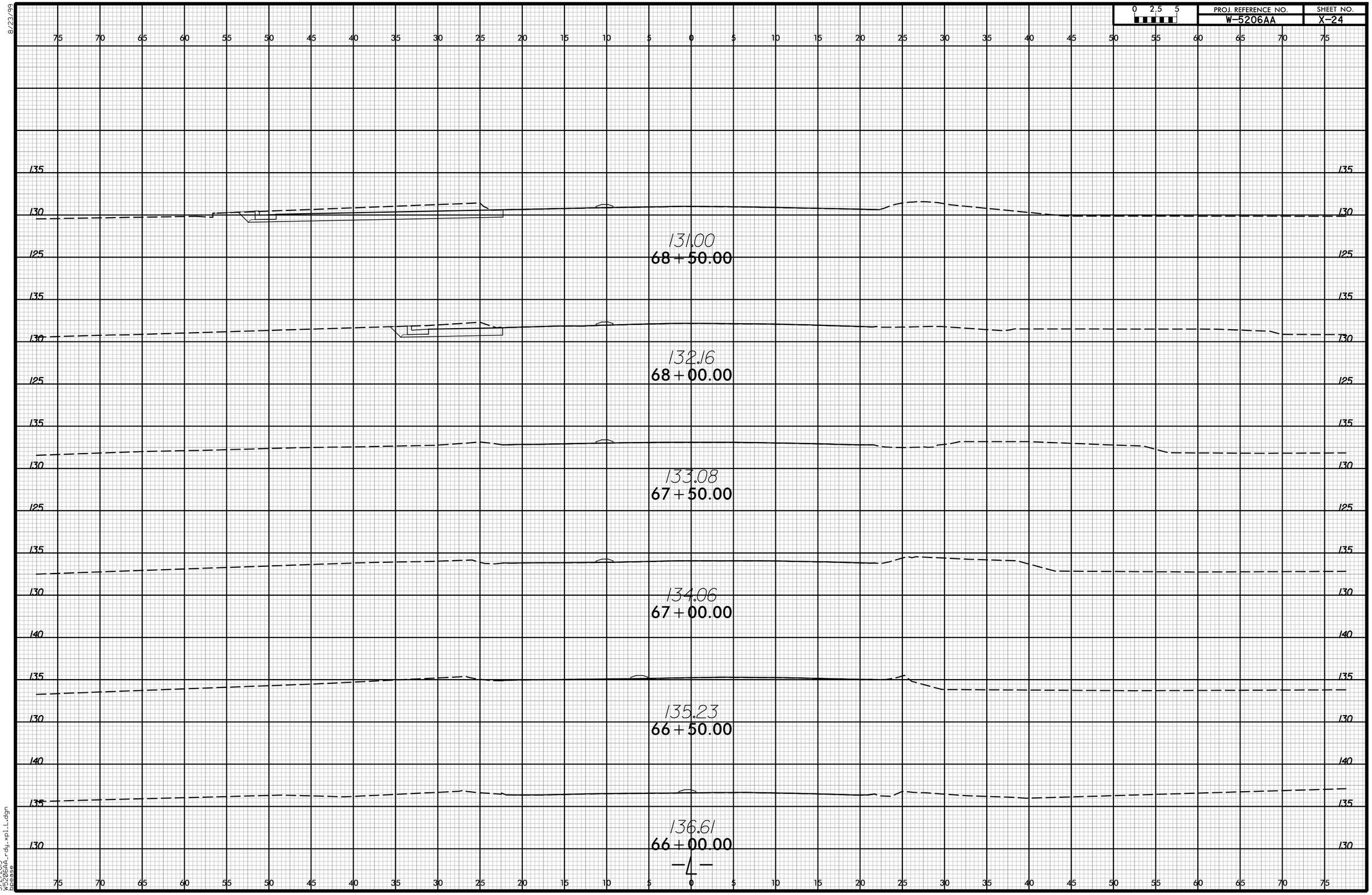

3/2/2015
W5206AA_rdy_xpl_L.dgn
bpease

8/23/99

0 2.5 5	PROJ. REFERENCE NO.	SHEET NO.
	W-5206AA	X-25

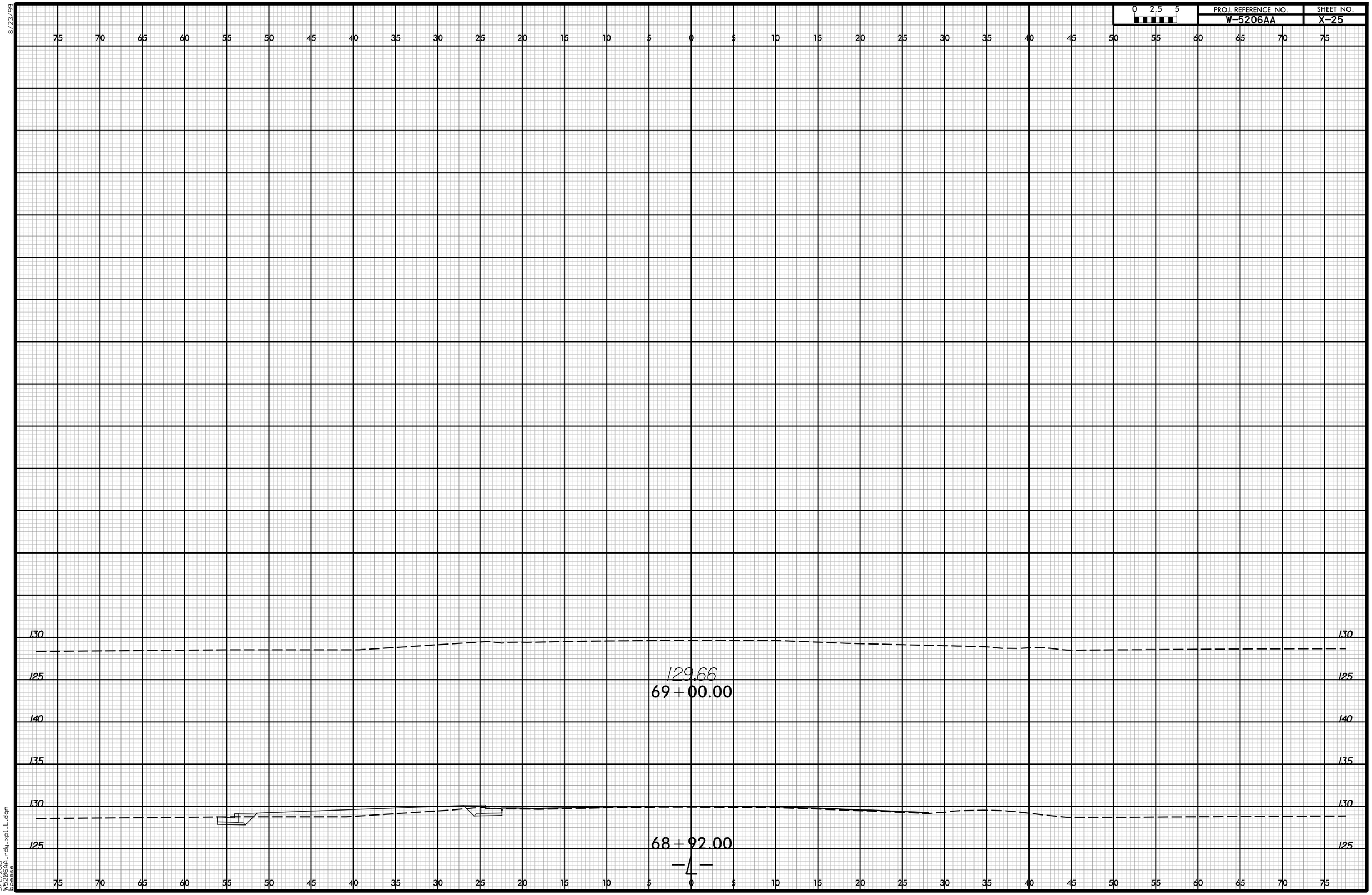

3/2/2015
W5206AA_rdy_xpl_L.dgn
bpease

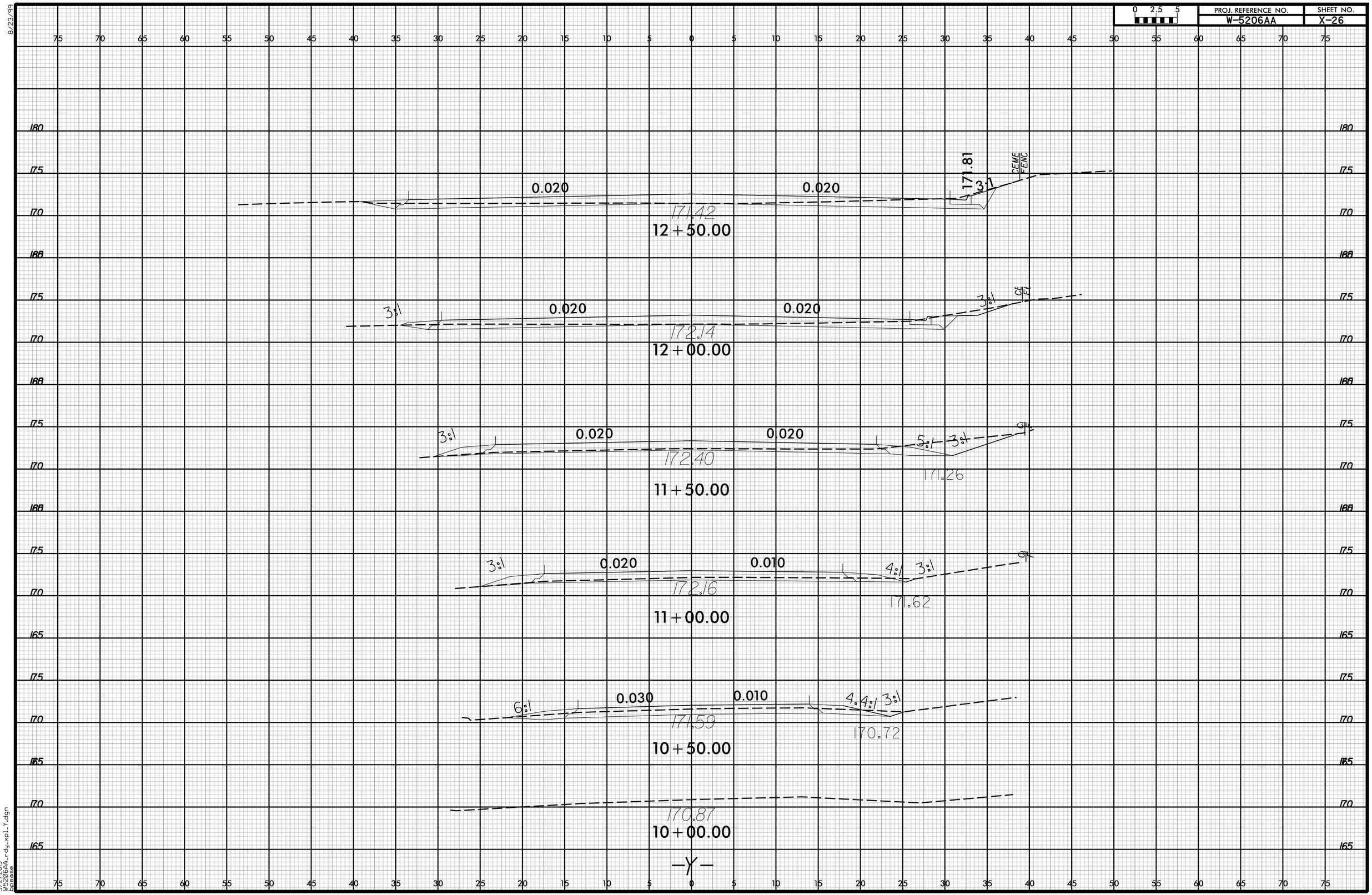
0.020
0.020
171.81
3:1
CEME
FENC
171.42
12+50.00
3:1
0.020
0.020
3:1
CE
FE
172.14
12+00.00
3:1
0.020
0.020
5:1
3:1
CE
172.40
171.26
11+50.00
3:1
0.020
0.010
4:1
3:1
172.16
171.62
11+00.00
6:1
0.030
0.010
4:1
4:1
3:1
171.59
170.72
10+50.00
170.87
10+00.00
-Y-

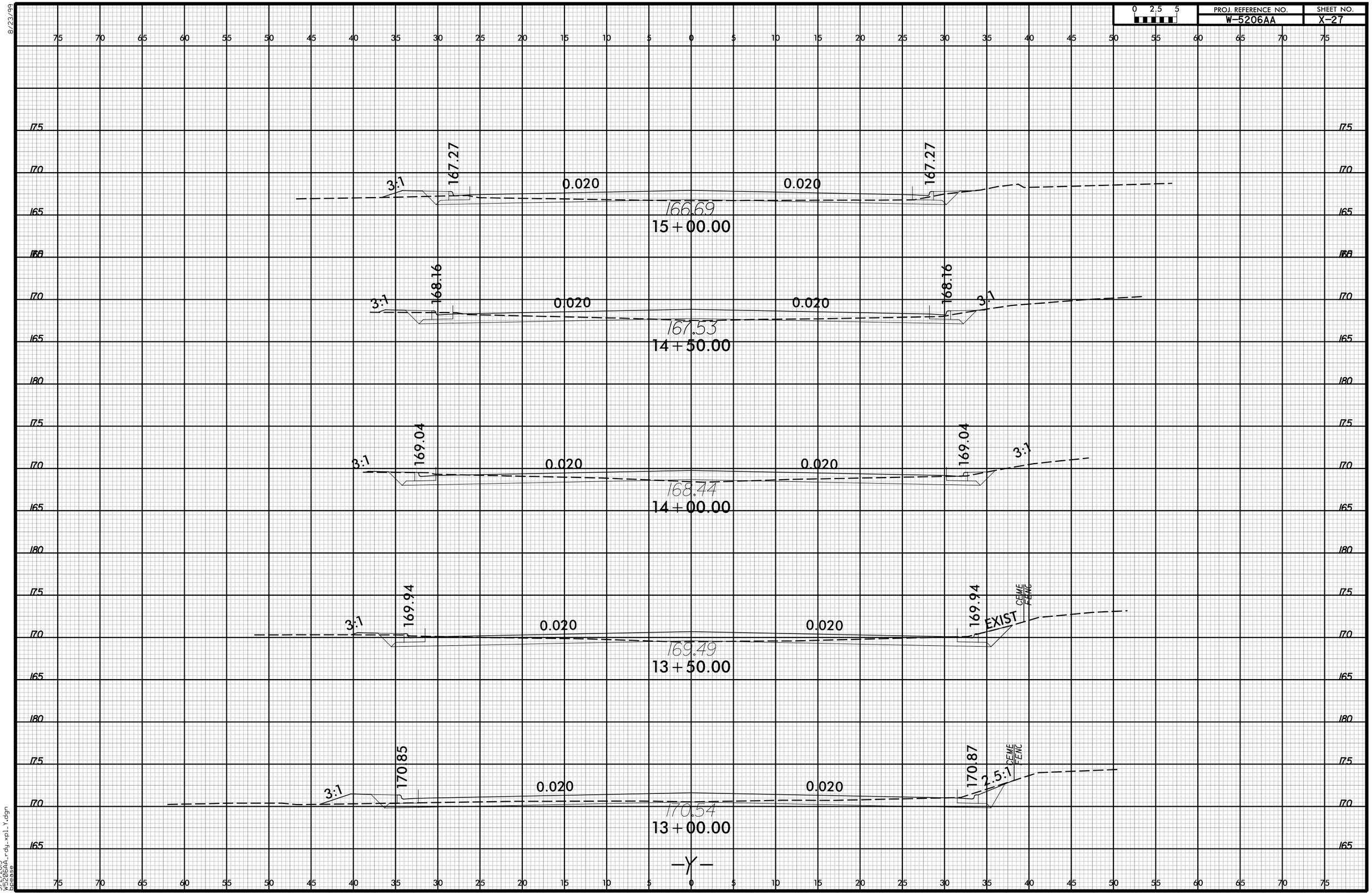
0 2.5 5
PROJ. REFERENCE NO.
W-5206AA
SHEET NO.
X-27
167.27
3:1
0.020
0.020
166.69
15 + 00.00
168.16
167.53
14 + 50.00
169.04
168.44
14 + 00.00
169.94
169.49
13 + 50.00
EXIST
CEME
FENC
170.85
170.87
2.5:1
170.54
13 + 00.00
-Y-
8/23/99
3/2/2015
W5206AA_rdy_xpl_Y.dgn
bpease

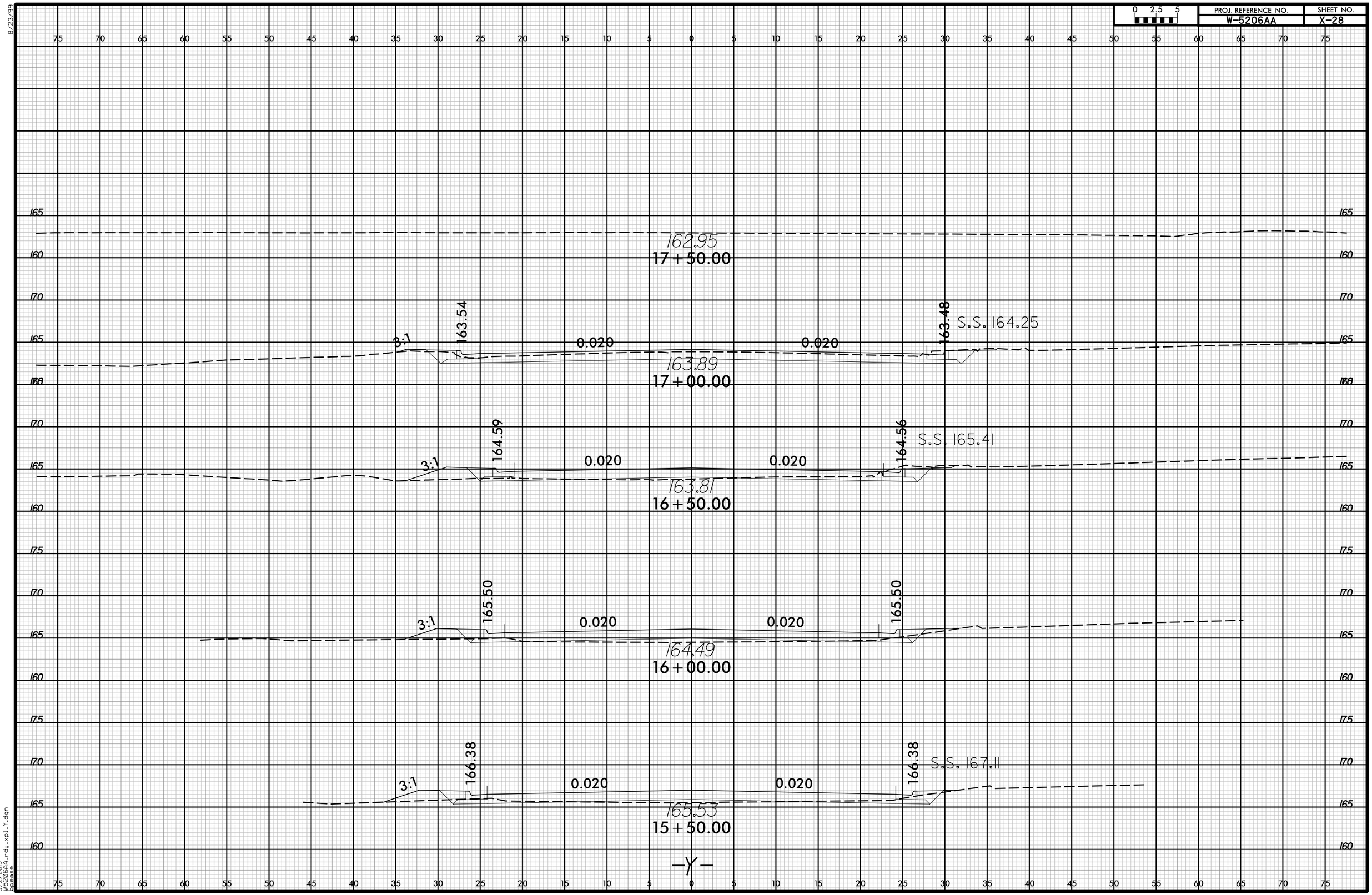
0 2.5 5
PROJ. REFERENCE NO.
W-5206AA
SHEET NO.
X-28
162.95
17+50.00
163.54
163.48
S.S. 164.25
3:1
0.020
0.020
163.89
17+00.00
164.59
164.56
S.S. 165.41
163.81
16+50.00
165.50
165.50
164.49
16+00.00
166.38
166.38
S.S. 167.11
165.53
15+50.00
-Y-
8/23/99
3/2/2015
W5206AA_rdy_xpl_Y.dgn
bpease