DocuSign Envelope ID: FA259A7B-BAF7-4906-9536-801867461CD2

MULKEY ENGINEERS & CONSULTANTS
PO Box 33127
Raleigh, N.C. 27636
(919) 851-1912
(919) 851-1918 (FAX)
WWW.MULKEYINC.COM

PROJECT REFERENCE NO.	SHEET NO.
U-5524	2
R/W SHEET NO.	

ROADWAY DESIGN ENGINEER

NORTH CAROLINA PROFESSIONAL SEAL 25474 ENGINEER W. CHRISTOPHER CRAVEN

DocuSigned by: W. Christopher Craven
90C4B90DFCCB48D...
5/26/2015

℄ –L– (SR 1536 – N. Water St.)
–Y2– (SR 1536 – N. WATER ST.)

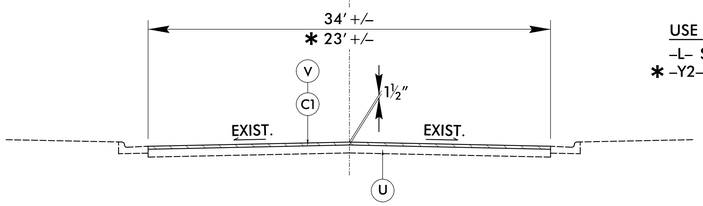

USE TYPICAL SECTION NO. 1 AS FOLLOWS:
–L– STA. 9+48 +/– TO 11+90.00
✱ –Y2– STA. 12+53.00 TO 14+09 +/–

TYPICAL SECTION No. 1

PAVEMENT SCHEDULE (FINAL PAVEMENT DESIGN)	
A	6″ PORTLAND CEMENT CONCRETE PAVEMENT. (TINTED AS DIRECTED BY ENGINEER)
C1	PROP. APPROX. 1½″ ASPHALT CONCRETE SURFACE COURSE TYPE S9.5B, AT AN AVERAGE RATE OF 168 LBS. PER SQ. YD.
C2	PROP. APPROX. 3″ ASPHALT CONCRETE SURFACE COURSE TYPE S9.5B, AT AN AVERAGE RATE OF 336 LBS. PER SQ. YD.
D1	PROP. APPROX. 4″ ASPHALT CONCRETE INTERMEDIATE COURSE TYPE I19.0B, AT AN AVERAGE RATE OF 456 LBS. PER SQ. YD.
E1	PROP. APPROX. 4″ ASPHALT CONCRETE BASE COURSE, TYPE B25.0B, AT AN AVERAGE RATE OF 114 LBS. PER SQ. YD. PER 1″ DEPTH TO BE PLACED IN LAYERS NOT LESS THAN 3″ IN DEPTH OR GREATER THAN 5½″ IN DEPTH.
J	6″ AGGREGATE BASE COURSE.
R1	2′-6″ CONCRETE CURB AND GUTTER.
R2	1′-6″ CONCRETE CURB AND GUTTER (MOUNTABLE).
R3	9″ X 18″ CONCRETE CURB.
R4	1′-6″ CONCRETE CURB AND GUTTER. SEE DETAIL SHEET 2A
S	4″ CONCRETE SIDEWALK
T	EARTH MATERIAL.
U	EXISTING PAVEMENT.
V	MILL EXISTING PAVEMENT 2″.

NOTE: PAVEMENT EDGE SLOPES ARE 1:1 UNLESS SHOWN OTHERWISE.

℄ –L– (SR 1536 – N. Water St.)

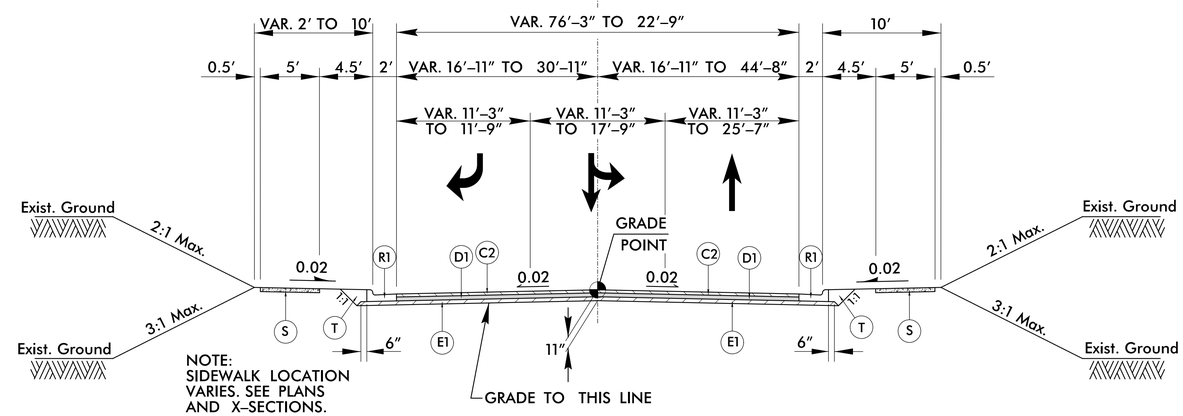

TYPICAL SECTION No. 1

USE TYPICAL SECTION NO. 1 AS FOLLOWS:
–L– STA. 11+90.00 TO 13+75.35

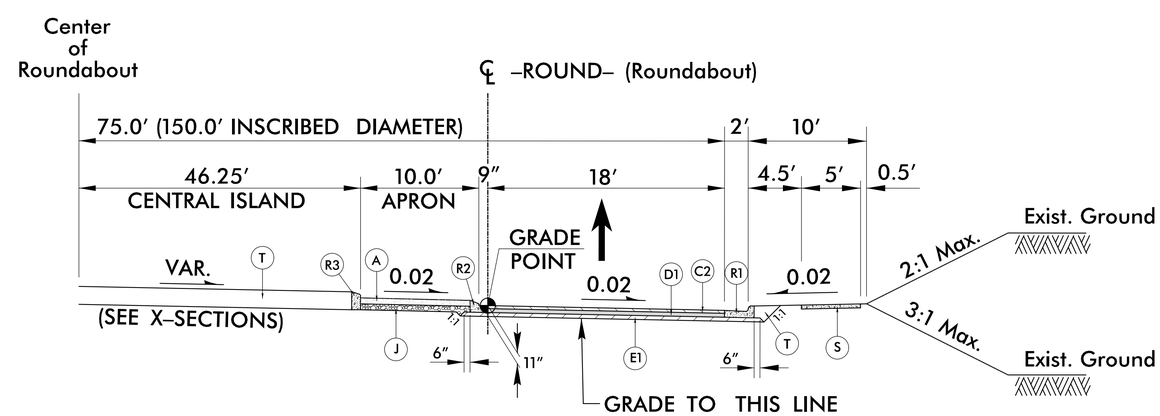

TYPICAL SECTION No. 2

USE TYPICAL SECTION NO. 2 AS FOLLOWS:
–ROUND– STA. 10+00.00 TO 13+58.14

t:\2013\2013065\01_CLIENT\Roadway\Proj\U-5524_rdy_typ.dgn 5/26/2015 7:43:22 AM