09/08/99

TIP PROJECT: W-5206AJ

WBS: 45336.2.FR36

STATE OF NORTH CAROLINA
DIVISION OF HIGHWAYS

HARNETT COUNTY

STATE	STATE PROJECT REFERENCE NO.	SHEET NO.	TOTAL SHEETS
N.C.	W-5206AJ	1	

STATE PROJ. NO.	F.A. PROJ. NO.	DESCRIPTION
45336.1.FR36	HSIP-0210 (32)	PE
45336.2.FR36	HSIP-0210 (32)	R/W /UTIL.
45336.3.FR36	HSIP-0210 (32)	CONST.

LOCATION: IMPROVEMENTS TO SR 2215 (HARNETT CENTRAL ROAD) AT THE INTERSECTION OF NC 210

TYPE OF WORK: GRADING, PAVING, DRAINAGE, SIGNALS, SIGNING, PAVEMENT MARKINGS

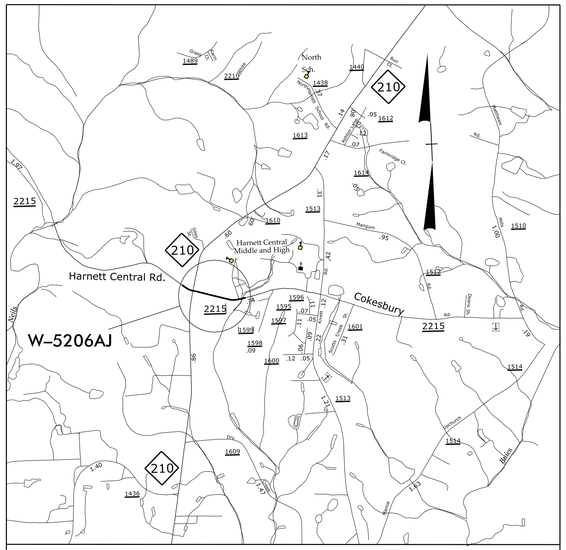

VICINITY MAP

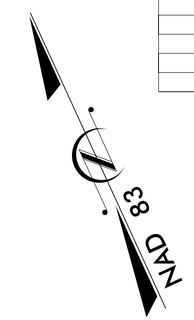

END TIP PROJECT W-5206AJ
-L- POT STA 36+75.45

BEGIN TIP PROJECT W-5206AJ
-L- POT STA 10+83.84

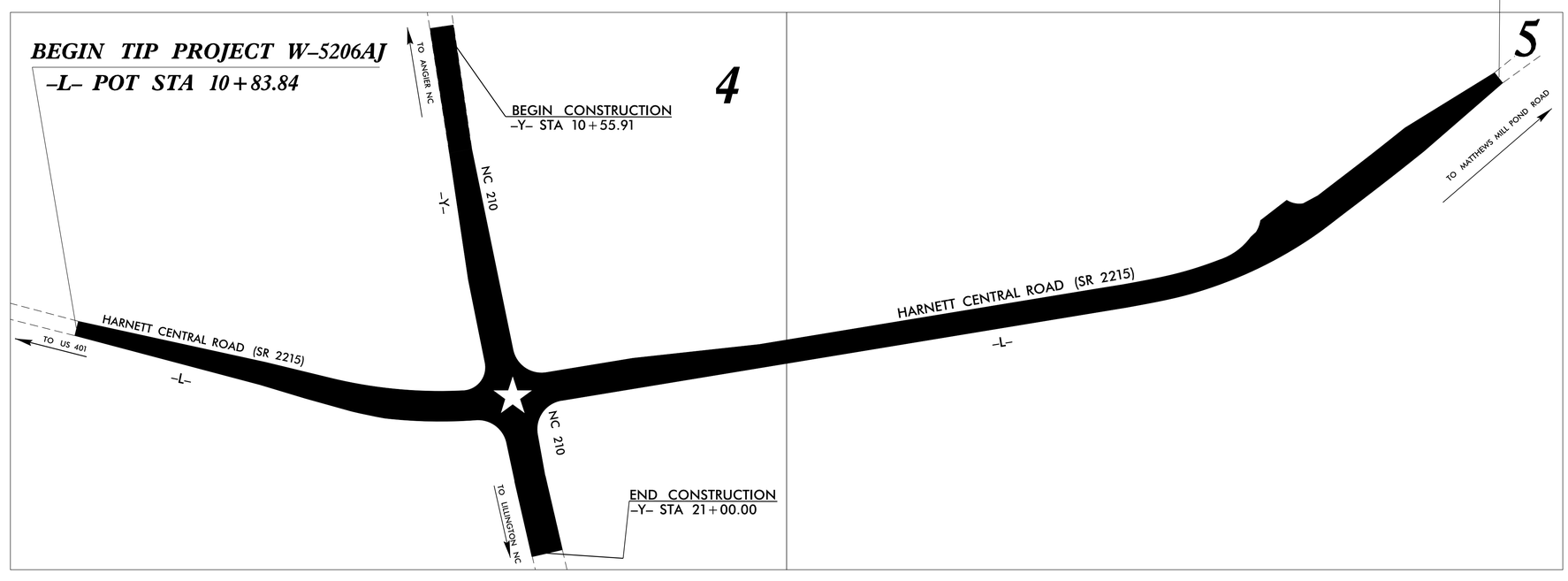

GRAPHIC SCALES

50 25 0 50 100
PLANS

50 25 0 50 100
PROFILE (HORIZONTAL)

10 5 0 10 20
PROFILE (VERTICAL)

DESIGN DATA

ADT 2012 = 2,800
ADT 2033 = 3,360
V = 55 MPH

PROJECT LENGTH

LENGTH ROADWAY TIP PROJECT W-5206AJ = 0.70 MILES

Prepared in the Office of:
DIVISION OF HIGHWAYS
431 Transportation Drive Fayetteville, NC 28301

2012 STANDARD SPECIFICATIONS

RIGHT OF WAY DATE:
JULY 31, 2014

LETTING DATE:
OCTOBER 21, 2015

SEAN MATUSZEWSKI
PROJECT ENGINEER

RICK HANDLIN
PROJECT DESIGN ENGINEER

DIVISION OF HIGHWAYS
STATE OF NORTH CAROLINA

P.E.
STATE HIGHWAY DESIGN ENGINEER

22-SEP-2015 13:34
H:\DDC\Projects\W-5206AJ (45336.1.FR36) SR 2215 (Harnett Central Road)\roadway\proj\W-5206AJ_Rdy_tsh.dgn
$$$$USERNAME$$$$

12/05/11

PROJECT REFERENCE NO.	SHEET NO.
W-5206AJ	1-B

Note: Not to Scale

****S.U.E. = Subsurface Utility Engineering***

STATE OF NORTH CAROLINA
DIVISION OF HIGHWAYS

CONVENTIONAL PLAN SHEET SYMBOLS

BOUNDARIES AND PROPERTY:

- State Line
- County Line
- Township Line
- City Line
- Reservation Line
- Property Line
- Existing Iron Pin — EIP
- Property Corner
- Property Monument — ECM
- Parcel/Sequence Number — 123
- Existing Fence Line
- Proposed Woven Wire Fence
- Proposed Chain Link Fence
- Proposed Barbed Wire Fence
- Existing Wetland Boundary — WLB
- Proposed Wetland Boundary — WLB
- Existing Endangered Animal Boundary — EAB
- Existing Endangered Plant Boundary — EPB
- Known Soil Contamination: Area or Site
- Potential Soil Contamination: Area or Site

BUILDINGS AND OTHER CULTURE:

- Gas Pump Vent or U/G Tank Cap
- Sign — S
- Well — W
- Small Mine
- Foundation
- Area Outline
- Cemetery
- Building
- School
- Church
- Dam

HYDROLOGY:

- Stream or Body of Water
- Hydro, Pool or Reservoir
- Jurisdictional Stream — JS
- Buffer Zone 1 — BZ 1
- Buffer Zone 2 — BZ 2
- Flow Arrow
- Disappearing Stream
- Spring
- Wetland
- Proposed Lateral, Tail, Head Ditch — FLOW
- False Sump

RAILROADS:

- Standard Gauge — CSX TRANSPORTATION
- RR Signal Milepost — MILEPOST 35
- Switch — SWITCH
- RR Abandoned
- RR Dismantled

RIGHT OF WAY:

- Baseline Control Point
- Existing Right of Way Marker
- Existing Right of Way Line
- Proposed Right of Way Line — RW
- Proposed Right of Way Line with Iron Pin and Cap Marker — RW
- Proposed Right of Way Line with Concrete or Granite R/W Marker — RW
- Existing Control of Access — CA
- Proposed Control of Access Line with Concrete C/A Marker — CA
- Existing Easement Line — E
- Proposed Temporary Construction Easement — E
- Proposed Temporary Drainage Easement — TDE
- Proposed Permanent Drainage Easement — PDE
- Proposed Permanent Drainage / Utility Easement — DUE
- Proposed Permanent Utility Easement — PUE
- Proposed Temporary Utility Easement — TUE
- Proposed Aerial Utility Easement — AUE
- Proposed Permanent Easement with Iron Pin and Cap Marker

ROADS AND RELATED FEATURES:

- Existing Edge of Pavement
- Existing Curb
- Proposed Slope Stakes Cut — C
- Proposed Slope Stakes Fill — F
- Proposed Curb Ramp — CR
- Existing Metal Guardrail
- Proposed Guardrail
- Existing Cable Guiderail
- Proposed Cable Guiderail
- Equality Symbol
- Pavement Removal

VEGETATION:

- Single Tree
- Single Shrub
- Hedge
- Woods Line
- Orchard
- Vineyard — Vineyard

EXISTING STRUCTURES:

MAJOR:

- Bridge, Tunnel or Box Culvert — CONC
- Bridge Wing Wall, Head Wall and End Wall — CONC WW

MINOR:

- Head and End Wall — CONC HW
- Pipe Culvert
- Footbridge
- Drainage Box: Catch Basin, DI or JB — CB
- Paved Ditch Gutter
- Storm Sewer Manhole — S
- Storm Sewer — S

UTILITIES:

POWER:

- Existing Power Pole
- Proposed Power Pole
- Existing Joint Use Pole
- Proposed Joint Use Pole
- Power Manhole — P
- Power Line Tower
- Power Transformer
- U/G Power Cable Hand Hole
- H-Frame Pole
- Recorded U/G Power Line — P
- Designated U/G Power Line (S.U.E.*) — P

TELEPHONE:

- Existing Telephone Pole
- Proposed Telephone Pole
- Telephone Manhole — T
- Telephone Booth
- Telephone Pedestal — T
- Telephone Cell Tower
- U/G Telephone Cable Hand Hole — HH
- Recorded U/G Telephone Cable — T
- Designated U/G Telephone Cable (S.U.E.*) — T
- Recorded U/G Telephone Conduit — TC
- Designated U/G Telephone Conduit (S.U.E.*) — TC
- Recorded U/G Fiber Optics Cable — T FO
- Designated U/G Fiber Optics Cable (S.U.E.*) — T FO

WATER:

- Water Manhole — W
- Water Meter
- Water Valve
- Water Hydrant
- Recorded U/G Water Line — W
- Designated U/G Water Line (S.U.E.*) — W
- Above Ground Water Line — A/G Water

TV:

- TV Satellite Dish
- TV Pedestal — C
- TV Tower
- U/G TV Cable Hand Hole — HH
- Recorded U/G TV Cable — TV
- Designated U/G TV Cable (S.U.E.*) — TV
- Recorded U/G Fiber Optic Cable — TV FO
- Designated U/G Fiber Optic Cable (S.U.E.*) — TV FO

GAS:

- Gas Valve
- Gas Meter
- Recorded U/G Gas Line — G
- Designated U/G Gas Line (S.U.E.*) — G
- Above Ground Gas Line — A/G Gas

SANITARY SEWER:

- Sanitary Sewer Manhole
- Sanitary Sewer Cleanout
- U/G Sanitary Sewer Line — SS
- Above Ground Sanitary Sewer — A/G Sanitary Sewer
- Recorded SS Forced Main Line — FSS
- Designated SS Forced Main Line (S.U.E.*) — FSS

MISCELLANEOUS:

- Utility Pole
- Utility Pole with Base
- Utility Located Object
- Utility Traffic Signal Box — S
- Utility Unknown U/G Line — ?UTL
- U/G Tank; Water, Gas, Oil
- Underground Storage Tank, Approx. Loc. — UST
- A/G Tank; Water, Gas, Oil
- Geoenvironmental Boring
- U/G Test Hole (S.U.E.*)
- Abandoned According to Utility Records — AATUR
- End of Information — E.O.I.

PROJECT REFERENCE NO.	SHEET NO.
W-5206AJ	2

NOTE:
USE EXISTING SUPER ELEVATIONS THROUGH –L– AND –Y– EXCEPT IN THE FOLLOWING AREA, SEE CROSS SECTION FOR THE SUPER ELEVATIONS
RT –L– STA 15+50.00 – 17+50.00

TRANSITION FROM EXISTING TO TYPICAL NO. 1
–L– STA. 10+83.84 TO STA 16+33.84

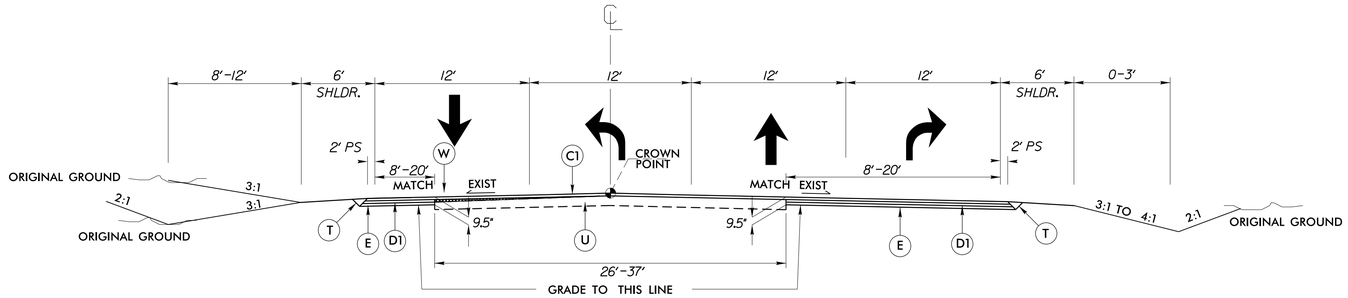

TYPICAL SECTION NO. 1

–L– STA. 16+33.84 TO STA 18+50.00

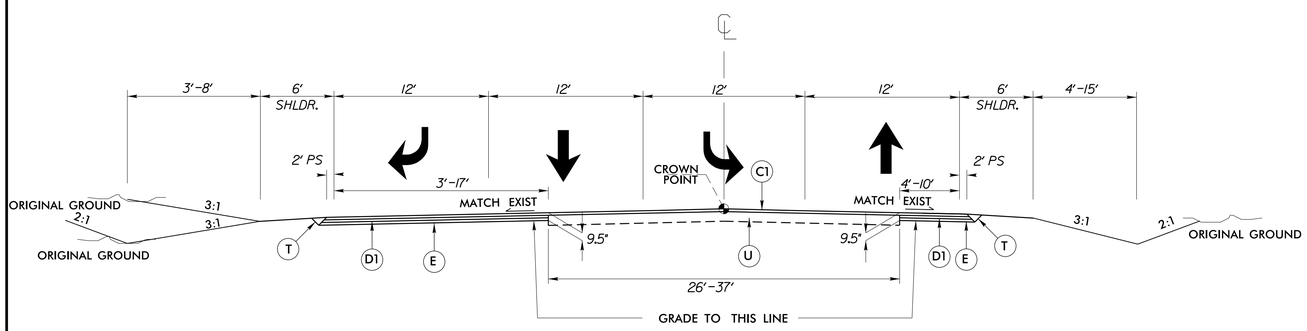

TYPICAL SECTION NO. 2

–L– STA. 18+50.00 TO STA 20+63.78
–L– STA. 32+45.00 TO STA 34+95.45

PAVEMENT SCHEDULE

C1	PROP. APPROX. 2" ASPHALT CONCRETE SURFACE COURSE, TYPE S9.5B, AT AN AVERAGE RATE OF 224 LBS. PER SQ. YD.
C2	PROP. VAR. DEPTH ASPHALT CONCRETE SURFACE COURSE, TYPE S9.5B, AT AN AVERAGE RATE OF 112 LBS. PER SQ. YD. PER 1" DEPTH TO BE PLACED IN LAYERS NOT TO EXCEED 1½" DEPTH
D1	PROP. APPROX. 3½" ASPHALT CONCRETE INTERMEDIATE COURSE, TYPE I19.0B, AT AN AVERAGE RATE OF 399 LBS. PER SQ. YD.
D2	PROP. VAR DEPTH ASPHALT CONC. INTERMEDIATE COURSE, TYPE I19.0B, AT AN AVERAGE RATE OF 114 LBS PER SQ. YD. PER 1" DEPTH TO BE PLACED IN LAYERS NOT LESS THAN 2½" OR GREATER THAN 4" IN DEPTH.
E	PROP. APPROX. 4" ASPHALT CONCRETE BASE COURSE, TYPE B25.0B, AT AN AVERAGE RATE OF 456 LBS. PER SQ. YD.
T	EARTH MATERIAL
U	EXISTING PAVEMENT

PROJECT NOTES

1. The Contractor shall not work on both sides of the road simultaneously within the same area.
2. Ingress and egress shall be maintained to all businesses dwellings on the project.
3. at the end of each workday, the Contractor shall be required to backfill any area adjacent to existing travelway that has been graded leaving no more than a 3" drop–off.
4. A minimum of two–way, two–lane traffic (plus all existing left and right turn lanes) shall be maintained during periods of construction inactivity.
5. The Contractor shall not be allowed to stop traffic for more than 5 minutes at a time in any one direction.
6. During periods of construction inactivity, the difference in elevation between lanes shall not exceed 1½ inch.
7. Access to police and fire stations, fire hydrants, and hospitals shall be maintained at all times.
8. During periods of construction inactivity, place cones/drums 3' from existing edge of pavement (travelway) as directed by the Engineer.
9. Channelizing devices in work areas shall be spaced no greater than 10' on center in radii, and shall be set 3' off the edge of travelway, unless otherwise indicated on plans.
10. Contractor to install and maintain all Erosion Control devises as directed by the Engineer.

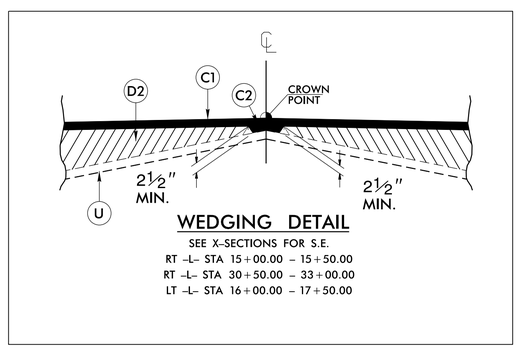

MILLING AT PAVEMENT TIE–INS

NOTES TO CONTRACTOR

For surface mixes over 1" in thickness, mill the existing pavement in acoordance with the following sketch as directed by the Engineer.

Locations shall include ties into existing concrete pavement, at bridge approaches where the bridge will not be resurfaced, and at the beginning and ending point of each resurfacing map.

Perform the work in accordance with Section 607 of the January 2012 North Carolina Department of Transportation Standard Specifications for Roads and Structures. Resurfacing will be accomplished at the same time as the milling operation.

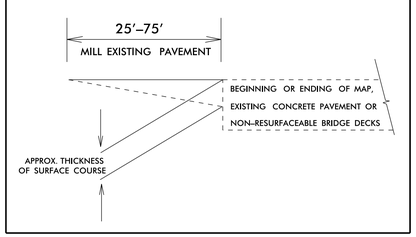

CONTRACTOR SHALL COORDINATE WITH LOCAL TRAFFIC SERVICES UNIT PRIOR TO THE INSTALLATION OF ALL PROPOSED SIGNAL DESIGN AND PLACEMENT OF ALL PAVEMENT MARKINGS.

FOR SIGNAL WORK, CONTACT FRANK WEST 910–486–1452, 28 DAYS PRIOR TO PLACEMENT.

FOR PAVEMENT MARKING, CONTACT KENT LANGDON 910–486–1452, 14 DAYS PRIOR TO FINAL PLACEMENT.

6/2/99
22-SEP-2015 10:09
H:\DOT\Roadway\proj\W-5206AJ (45336,1,FR36) SR 2215 (Harnett Central Road)\roadway\proj\W-5206AJ_Rdy_typ.dgn
H:\DOT\Roadway\proj\W-5206AJ_Rdy_typ.dgn

PROJECT REFERENCE NO.	SHEET NO.
W-5206AJ	2A

TRANSITION FROM TYPICAL NO. 2 TO TYPICAL NO. 3
–L– STA. 20+63.78 TO STA 22+83.78

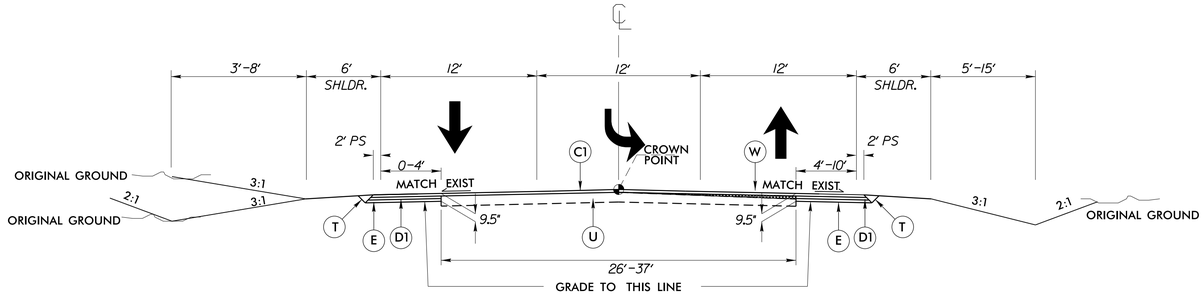

TYPICAL SECTION NO. 3
–L– STA. 22+83.78 TO STA 32+45.00

TRANSITION FROM TYPICAL NO. 2 TO EXISTING
–L– STA. 34+95.45 TO STA 36+75.45

TRANSITION FROM EXISTING TO TYPICAL NO. 4
–Y– STA. 11+55.04 TO STA 13+75.04

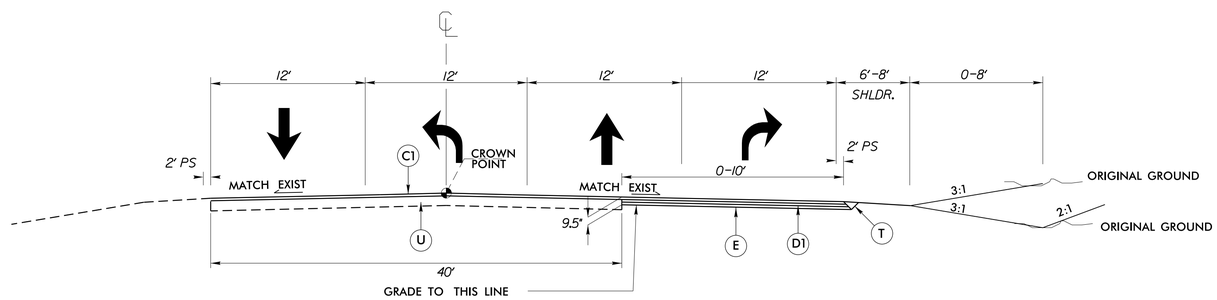

TYPICAL SECTION NO. 4
–Y– STA. 13+75.04 TO STA 15+40.82

TRANSITION FROM TYPICAL NO. 4 TO EXISTING

PAVEMENT SCHEDULE

C1	PROP. APPROX. 2" ASPHALT CONCRETE SURFACE COURSE, TYPE S9.5B, AT AN AVERAGE RATE OF 224 LBS. PER SQ. YD.
C2	PROP. VAR. DEPTH ASPHALT CONCRETE SURFACE COURSE, TYPE S9.5B, AT AN AVERAGE RATE OF 112 LBS. PER SQ. YD. PER 1" DEPTH TO BE PLACED IN LAYERS NOT TO EXCEED 1½" DEPTH
D1	PROP. APPROX. 3½" ASPHALT CONCRETE INTERMEDIATE COURSE, TYPE I19.0B, AT AN AVERAGE RATE OF 399 LBS. PER SQ. YD.
D2	PROP. VAR DEPTH ASPHALT CONC. INTERMEDIATE COURSE, TYPE I19.0B, AT AN AVERAGE RATE OF 114 LBS PER SQ. YD. PER 1" DEPTH TO BE PLACED IN LAYERS NOT LESS THAN 2½" OR GREATER THAN 4" IN DEPTH.
E	PROP. APPROX. 4" ASPHALT CONCRETE BASE COURSE, TYPE B25.0B, AT AN AVERAGE RATE OF 456 LBS. PER SQ. YD.
T	EARTH MATERIAL
U	EXISTING PAVEMENT

PROJECT NOTES

1. The Contractor shall not work on both sides of the road simultaneously within the same area.
2. Ingress and egress shall be maintained to all businesses dwellings on the project.
3. at the end of each workday, the Contractor shall be required to backfill any area adjacent to existing travelway that has been graded leaving no more than a 3" drop–off.
4. A minimum of two–way, two–lane traffic (plus all existing left and right turn lanes) shall be maintained during periods of construction inactivity.
5. The Contractor shall not be allowed to stop traffic for more than 5 minutes at a time in any one direction.
6. During periods of construction inactivity, the difference in elevation between lanes shall not exceed 1½ inch.
7. Access to police and fire stations, fire hydrants, and hospitals shall be maintained at all times.
8. During periods of construction inactivity, place cones/drums 3' from existing edge of pavement (travelway) as directed by the Engineer.
9. Channelizing devices in work areas shall be spaced no greater than 10' on center in radii, and shall be set 3' off the edge of travelway, unless otherwise indicated on plans.
10. Contractor to install and maintain all Erosion Control devises as directed by the Engineer.

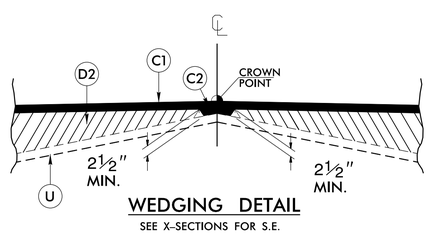

WEDGING DETAIL

SEE X–SECTIONS FOR S.E.
RT –L– STA 15+00.00 – 15+50.00
RT –L– STA 30+50.00 – 33+00.00
LT –L– STA 16+00.00 – 17+50.00

MILLING AT PAVEMENT TIE–INS

NOTES TO CONTRACTOR

For surface mixes over 1" in thickness, mill the existing pavement in accordance with the following sketch as directed by the Engineer.

Locations shall include ties into existing concrete pavement, at bridge approaches where the bridge will not be resurfaced, and at the beginning and ending point of each resurfacing map.

Perform the work in accordance with Section 607 of the January 2012 North Carolina Department of Transportation Standard Specifications for Roads and Structures. Resurfacing will be accomplished at the same time as the milling operation.

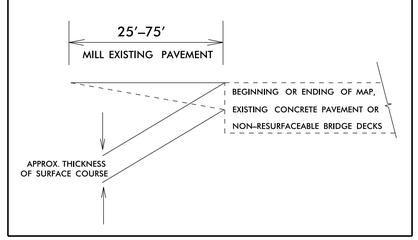

CONTRACTOR SHALL COORDINATE WITH LOCAL TRAFFIC SERVICES UNIT PRIOR TO THE INSTALLATION OF ALL PROPOSED SIGNAL DESIGN AND PLACEMENT OF ALL PAVEMENT MARKINGS.

FOR SIGNAL WORK, CONTACT FRANK WEST 910–486–1452, 28 DAYS PRIOR TO PLACEMENT.

FOR PAVEMENT MARKING, CONTACT KENT LANGDON 910–486–1452, 14 DAYS PRIOR TO FINAL PLACEMENT.

22-SEP-2015 10:10
S:\TPD\Projects\W-5206AJ (45336.1.FR36) SR 2215 (Harnett Central Road)\roadway\proj\W-5206AJ_Rdy_typ_2.dgn
$$$$USERNAME$$$$

PROJECT REFERENCE NO.	SHEET NO.
W-5206AJ	2-B

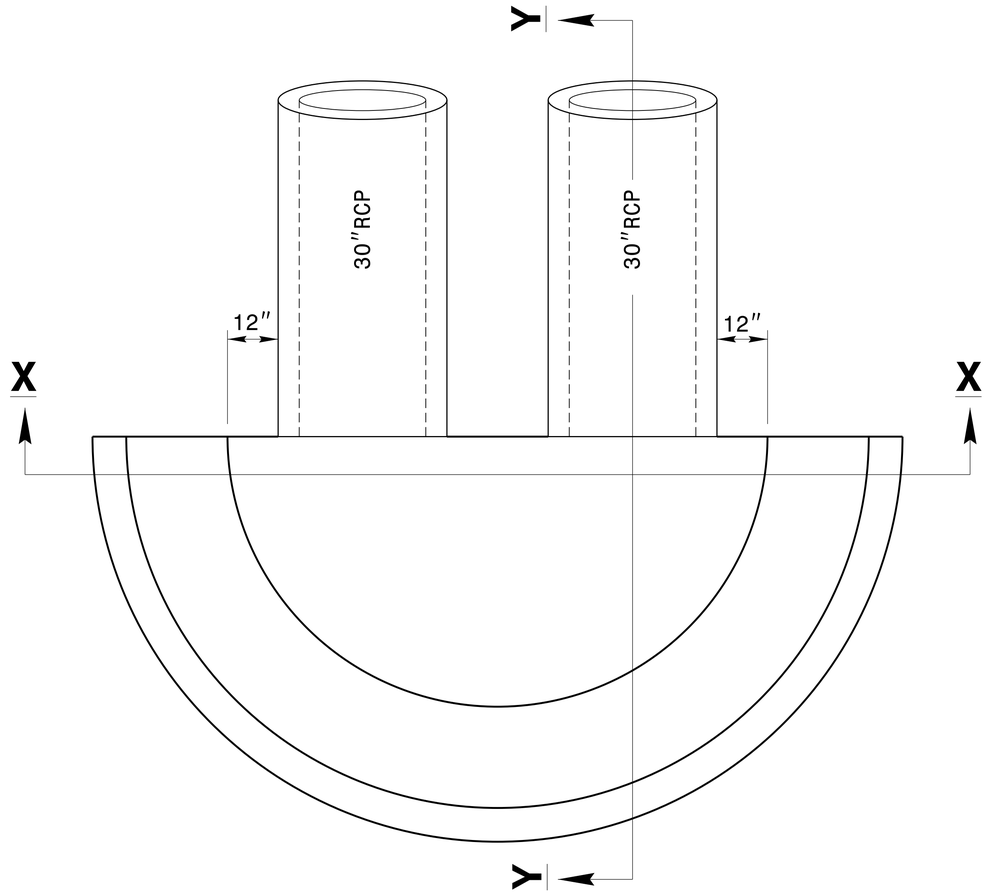

PLAN VIEW

GENERAL NOTES:

USE CLASS "B" CONCRETE

CONSTRUCT WIDTH AND SHAPE OF PROPOSED MODIFIED 4" THICK CONCRETE FLUME INLET AS SHOWN OR AS DIRECTED BY THE ENGINEER.

DIMENSIONS MAY BE ADJUSTED AS DIRECTED BY THE ENGINEER.

SEE STANDARD DRAWING 846.01 FOR 9"x18" CONCRETE CURB

THE EXISTING GROUND ELEVATION WILL BE THE SAME AROUND THE PERIMETER OF THE CONCRETE CURB.

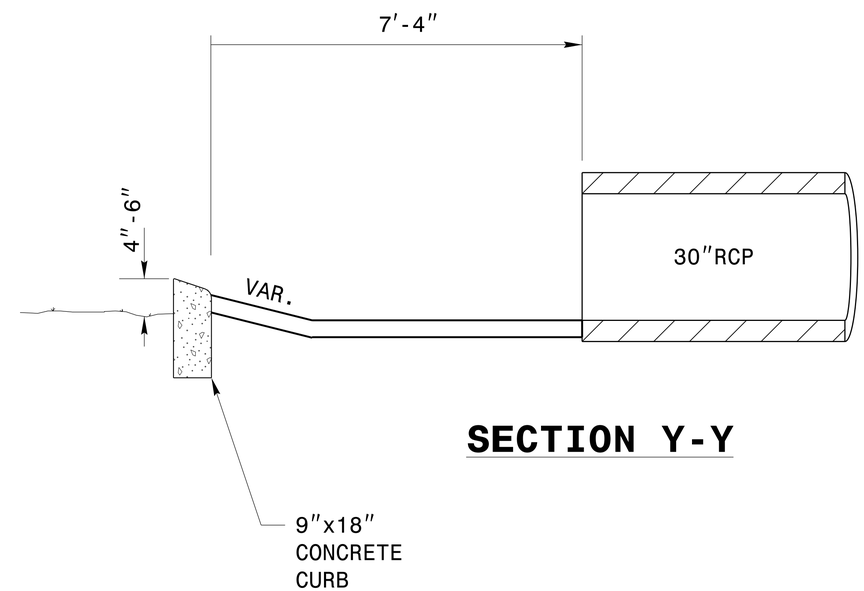

SECTION Y-Y

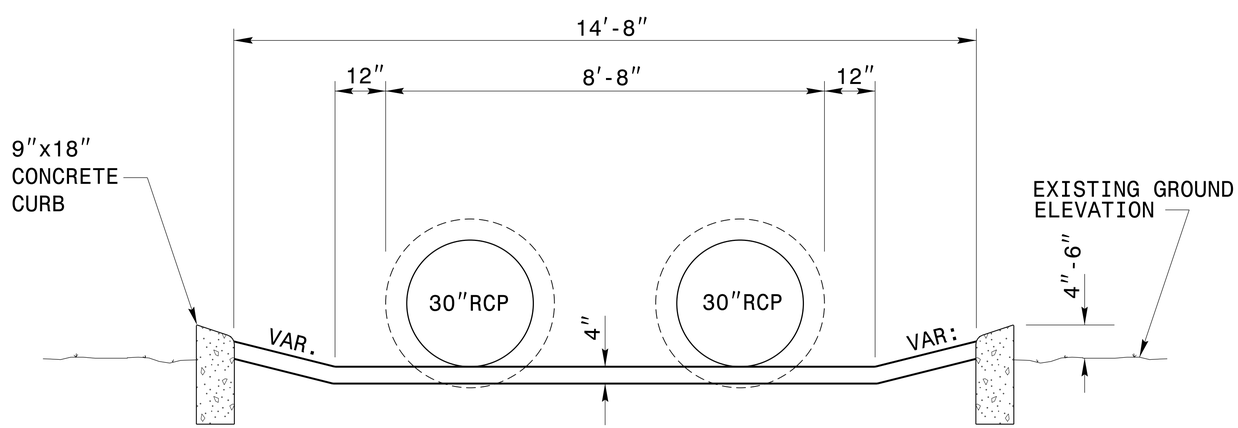

SECTION X-X

CONTRACT SERVICES & DEVELOPMENT UNIT
STANDARDS AND SPECIAL DESIGN
Office 919-707-6900 FAX 919-250-4119

CONCRETE FLUME INLET

ORIGINAL BY:		DATE:	
MODIFIED BY:	rnbritt	DATE:	9-05-14
CHECKED BY:		DATE:	
FILE SPEC.:	details/nbritt/english/hydro/w5206aj concrete flume inlet.dgn		

$$$$SYSTIME$$$$
$$$$USERNAME$$$$

PROJECT REFERENCE NO.	SHEET
W-5206AJ	2H-1

GEOENVIRONMENTAL ENGINEER

NORTH CAROLINA PROFESSIONAL SEAL 31499 ENGINEER CYRUS F. PARKER

DocuSigned by: Cyrus Parker 8/12/2015
C96492AF5E824DF...

SIGNATURE DATE

ENGINEER

SIGNATURE DATE

Detail for Temporary Containment of Contaminated Soil

Cross-Section View

NOTE:
The Contractor shall stockpile all contaminated soil excavated from a property in a location within the property boundaries of the source parcel. If the volume of contaminated material exceeds available space on site, the Contractor shall obtain a permit from the NCDENR UST Section for off-site temporary storage.

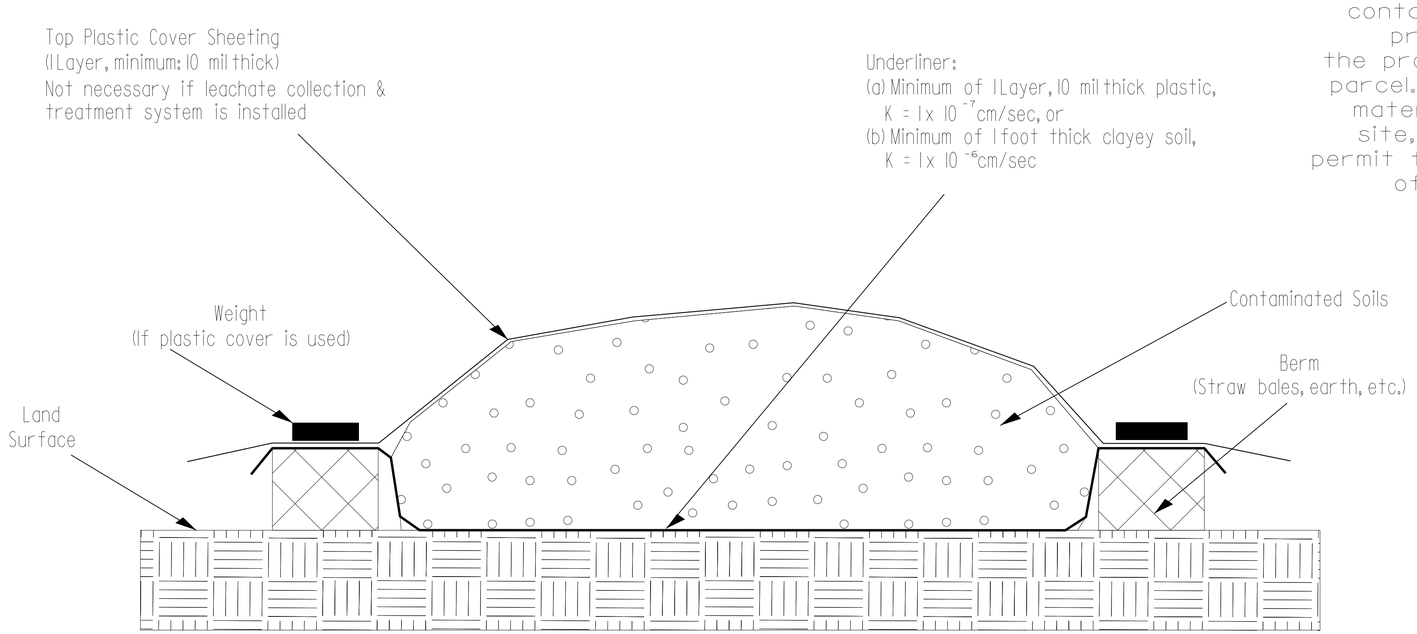

Map View

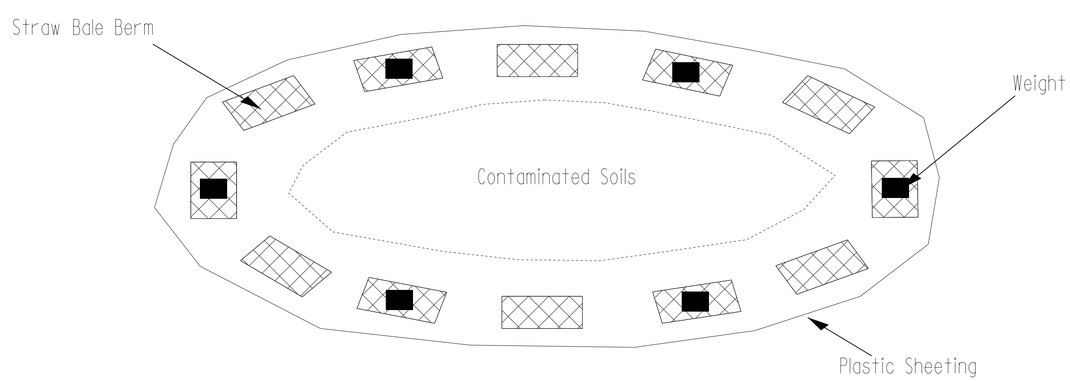

PREPARED BY:	DATE:
REVIEWED BY:	DATE:

GEOTECHNICAL ENGINEERING UNIT

STATE OF NORTH CAROLINA DEPARTMENT OF TRANSPORTATION

- ☐ EASTERN REGIONAL OFFICE
- ☐ WESTERN REGIONAL OFFICE
- ☒ CONTRACT OFFICE

STATE OF NORTH CAROLINA
DEPARTMENT OF TRANSPORTATION
RALEIGH

STOCKPILE CONTAINMENT DETAIL

REVISIONS

NO.	BY	DATE	NO.	BY	DATE
1			3		
2			4		

COMPUTED BY: GLENDA SNIVELY	DATE: APRIL 7, 2015
CHECKED BY: RICK HANDLIN	DATE: APRIL 7, 2015

PROJECT REFERENCE NO.	SHEET NO.
W-5206AJ	3

STATE OF NORTH CAROLINA
DIVISION OF HIGHWAYS
SUB-REGIONAL & REGIONAL
LIST OF PIPES, ENDWALLS, ETC. (FOR PIPES 48" & UNDER)

NOTE: Invert Elevations are for Bid Purposes only and shall not be used for project construction stakeout.
See "Standard Specifications For Roads and Structures, Section 300-5".

STATION	LOCATION (LT, RT, OR CL)	END PIPE NO. FROM	END PIPE NO. TO	TOP ELEVATION	INVERT ELEVATION	INVERT ELEVATION	SLOPE CRITICAL	R.C. PIPE (CLASS III) 15"	18"	24"	30"	36"	42"	48"	R.C. PIPE (CLASS IV) 12"	15"	18"	24"	30"	36"	42"	48"	ENDWALLS CU. YDS. R.C.P.	C.S.P.	REMARKS
-L- 14+46	LT							1																	
-L- 21+85	LT							1																	
-L- 23+51	RT							1																	
-L- 24+55	LT			273.35	271.10					1															COLLAR & EXTEND
	RT			273.15	270.90																				
-L- 24+40	LT			271.79	269.54					1															COLLAR & EXTEND
	RT			271.49	269.24																				
-L- 26+07	RT							1																	
-L- 27+28	RT							1																	
-L- 28+14	RT							1																	
-L- 29+59	RT							1																	
-L- 29+76	LT	404		266.20	262.80															1			3.8		HEADWALL FOR DUAL 36" RCP-IV
30+25	RT		405	265.70	262.30																		3.8		HEADWALL FOR DUAL 36" RCP-IV
-L-29+80	LT	406		266.20	262.80															1					
30+30	RT		407	265.70	262.30																				
-L-33+97	LT	408		267.49	264.70														1						SPECIAL CONC FLUME FOR DUAL 30" RCP-IV-SEE STRUCTURES 408 & 410
	RT		409	267.29	264.50																				
-L-34+05	LT	410		267.49	264.70														1						
	RT		411	267.29	264.50																				
-Y- 15+17	LT	412		284.91	283.20												1								
	RT		413	284.41	282.70																				
GRAND TOTALS								7		2							1		2	2			7.6		

Other columns (no entries): SIZE; THICKNESS OR GAUGE; DRAINAGE PIPE (RCP, CSP, CAAP, HDPE, or PVC) 12", 15", 18", 24", 30", 36", 42", 48", DO NOT USE RCP, DO NOT USE CSP, DO NOT USE CAAP, DO NOT USE HDPE; C.S. PIPE 12", 15", 18", 24", 36", 42", 48" (.064, .064, .064, .064, .079, .109, .109); *** R. C. PIPE (CLASS V); *** R. C. PIPE CULVERTS, CONTRACTOR DESIGN PIPE; *** R. C. PIPE CULVERTS, CONTRACTOR DESIGN PIPE; 15" SIDE DRAIN PIPE; 18" SIDE DRAIN PIPE; ENDWALLS STD. 838.01, STD. 838.11 OR STD. 838.80 (UNLESS NOTED OTHERWISE); QUANTITIES FOR DRAINAGE STRUCTURES * TOTAL L.F. FOR PAY QUANTITY SHALL BE COL. 'A' + (1.3 X COL. 'B'): PER EACH (0' THRU 5.0'), LIN. *FT. A 5.0' THRU 10.0', B 10.0' AND ABOVE; C.B. STD. 840.01 OR STD. 840.02; FRAME, GRATES AND HOOD STANDARD 840.03, TYPE OF GRATE E, F, G; CONCRETE TRANSITIONAL SECTION: CATCH BASIN, TRAFFIC BEARING DROP INLET; M.H. FRAME & COVER STD. 840.54; D.I. FRAME & GRATE STD. 840.29; CONV. EXIST. O.T.C.B. TO C.B. (DETAIL 2G); J.B. STD. 840.31 OR 840.32; T.B.J.B. STD. 840.34; T.B.D.I. STD. 840.35; CONC. COLLARS CL. "B" C.Y. STD 840.72; CONC. & BRICK PIPE PLUG, C.Y. STD. 840.71; PIPE REMOVAL LIN.FT.

ABBREVIATIONS

C.B.	CATCH BASIN
N.D.I.	NARROW DROP INLET
D.I.	DROP INLET
G.D.I.	GRATED DROP INLET
G.D.I. (N.S.)	GRATED DROP INLET (NARROW SLOT)
J.B.	JUNCTION BOX
M.H.	MANHOLE
T.B.D.I.	TRAFFIC BEARING DROP INLET
T.B.J.B.	TRAFFIC BEARING JUNCTION BOX

4/04/06
23-SEP-2015 17:23
R:\Harnett Central Road\roadway\proj\W-5206AJ_Rdy_sum.dgn
$$$$USERNAME$$$$

COMPUTED BY: GLENDA SNIVELY DATE: APRIL 7, 2015
CHECKED BY: RICK HANDLIN DATE: APRIL 7, 2015

PROJECT REFERENCE NO.	SHEET NO.
W-5206AJ	3A

STATE OF NORTH CAROLINA
DIVISION OF HIGHWAYS
SUB-REGIONAL & REGIONAL

SUMMARY OF EARTHWORK

IN CUBIC YARDS

STATE OF NORTH CAROLINA
DIVISION OF HIGHWAYS

STATION	STATION	EXCAVATION					EMBANKMENT				BORROW	WASTE			
		TOTAL UNCL. EXCAV.	ROCK	UNDER-CUT	UNSUIT. UNCLASS.	SUITABLE UNCLASS.	TOTAL	ROCK	EARTH	EMBANK. (+) 25%		ROCK	SUITABLE	UNSUIT.	TOTAL
10+50 (-L-)	37+00 (-L-)	1678				1678	1030		1030	1288			391		391
11+50 (-Y-)	17+00 (-Y-)	183				183	34		34	43			141		141
TOTALS		1861				1861	1064		1064	1330			531		531
GRAND TOTALS						1861	1064		1064	1330			531		531
SAY															531

Note: Approximate quantities only. Unclassified Excavation, Fine Grading, Clearing and Grubbing and Undercut will be paid for at the contract lump sum price for "Grading."

4/04/06
5336.1.F1 23-SEP-2015 17:24
r36ssarnowe ess
Garnett Central Road\roadway\proj\W-5206AJ_Rdy_sum.dgn

PROJECT REFERENCE NO.	SHEET NO.
W-5206AJ	4

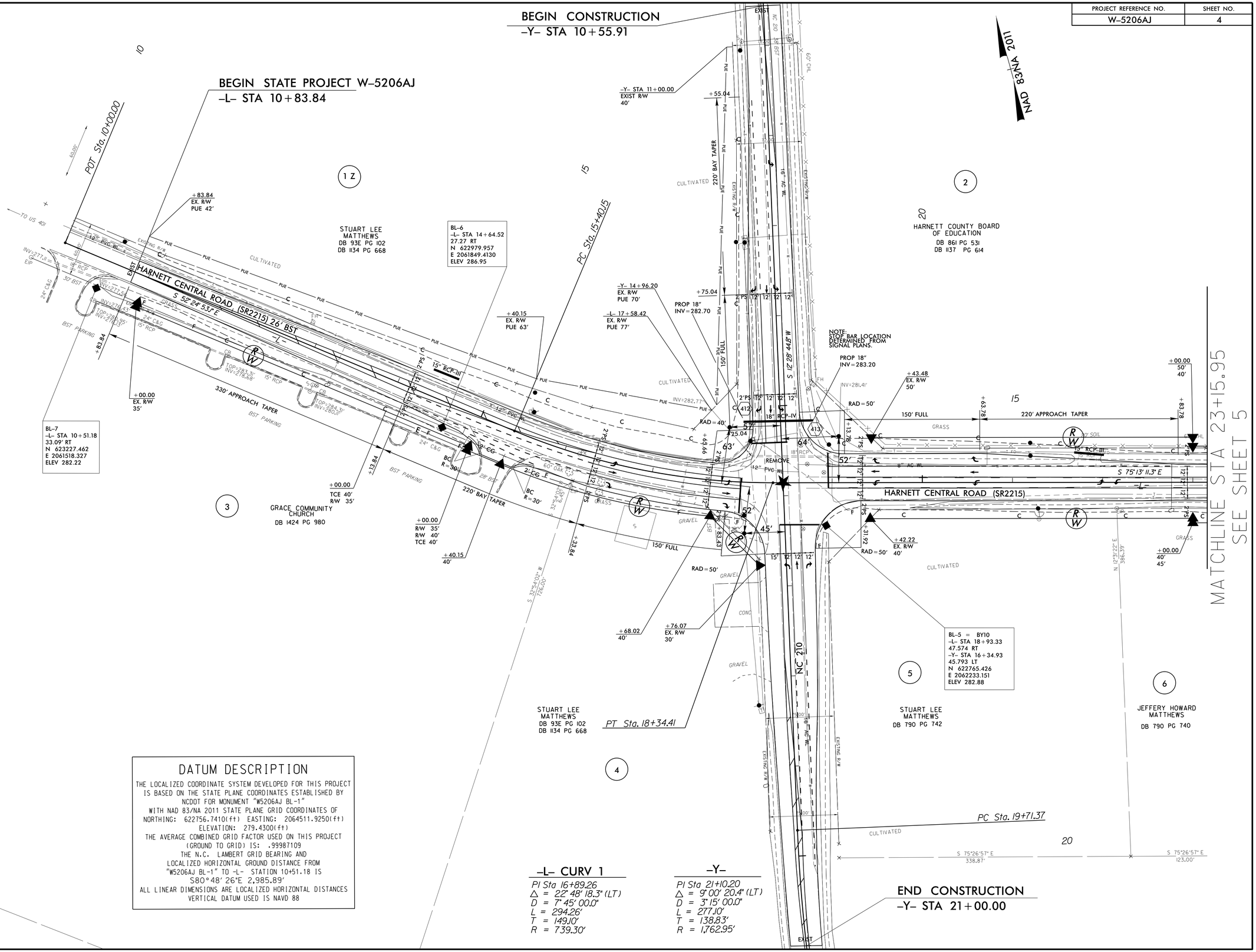

DATUM DESCRIPTION

THE LOCALIZED COORDINATE SYSTEM DEVELOPED FOR THIS PROJECT IS BASED ON THE STATE PLANE COORDINATES ESTABLISHED BY NCDOT FOR MONUMENT "W5206AJ BL-1" WITH NAD 83/NA 2011 STATE PLANE GRID COORDINATES OF NORTHING: 622756.7410(ft) EASTING: 2064511.9250(ft) ELEVATION: 279.4300(ft)
THE AVERAGE COMBINED GRID FACTOR USED ON THIS PROJECT (GROUND TO GRID) IS: .99987109
THE N.C. LAMBERT GRID BEARING AND LOCALIZED HORIZONTAL GROUND DISTANCE FROM "W5206AJ BL-1" TO -L- STATION 10+51.18 IS
S80°48' 26"E 2,985.89'
ALL LINEAR DIMENSIONS ARE LOCALIZED HORIZONTAL DISTANCES
VERTICAL DATUM USED IS NAVD 88

-L- CURV 1

PI Sta 16+89.26
△ = 22° 48' 18.3" (LT)
D = 7° 45' 00.0"
L = 294.26'
T = 149.10'
R = 739.30'

-Y-

PI Sta 21+10.20
△ = 9° 00' 20.4" (LT)
D = 3° 15' 00.0"
L = 277.10'
T = 138.83'
R = 1,762.95'

8/17/99

22-SEP-2015 10:13
r5ashley
$$$$DGNNAME$$$$

PROJECT REFERENCE NO.	SHEET NO.
W-5206AJ	5

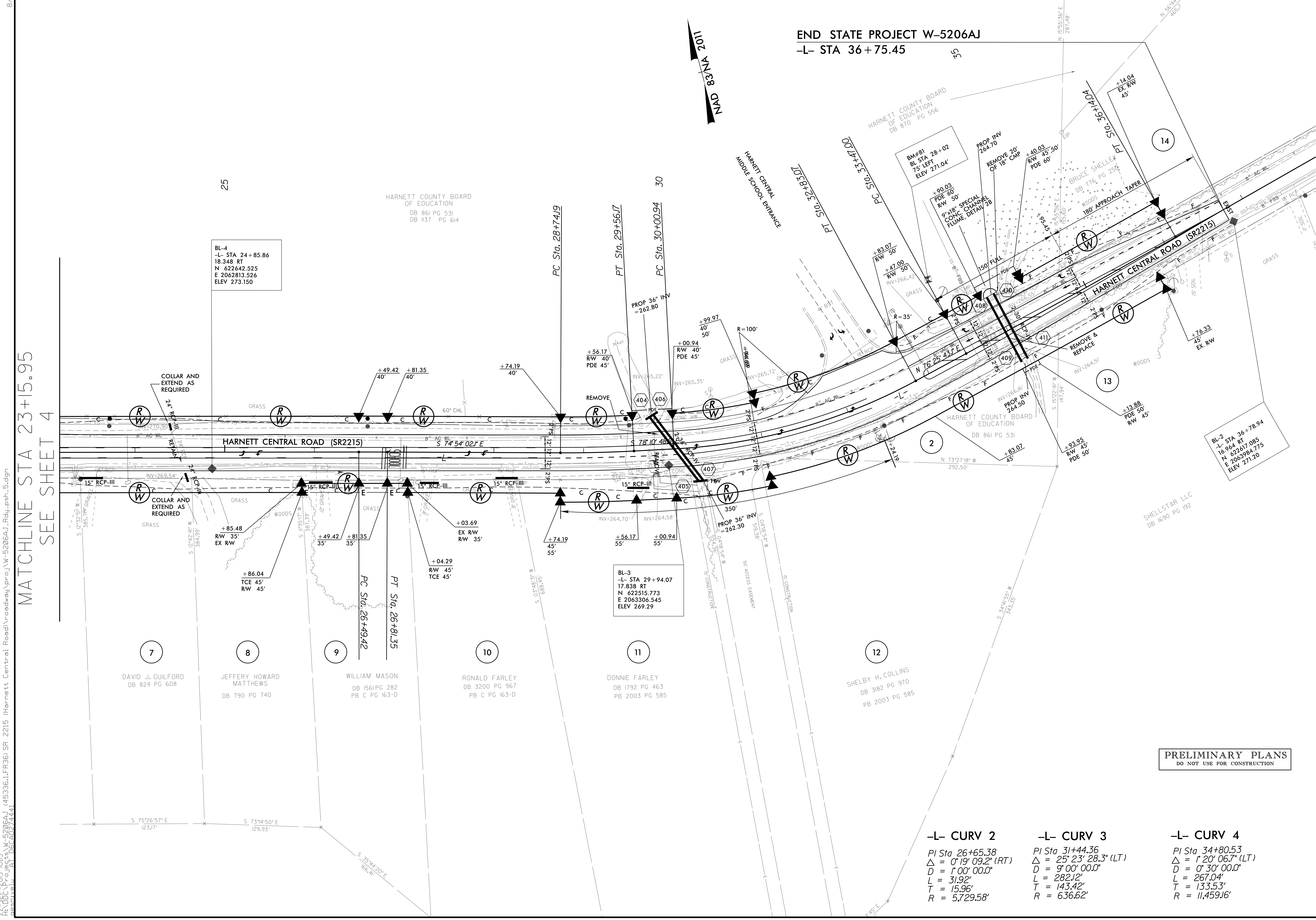

PRELIMINARY PLANS
DO NOT USE FOR CONSTRUCTION

-L- CURV 2
PI Sta 26+65.38
Δ = 0° 19' 09.2" (RT)
D = 1° 00' 00.0"
L = 31.92'
T = 15.96'
R = 5,729.58'

-L- CURV 3
PI Sta 31+44.36
Δ = 25° 23' 28.3" (LT)
D = 9° 00' 00.0"
L = 282.12'
T = 143.42'
R = 636.62'

-L- CURV 4
PI Sta 34+80.53
Δ = 1° 20' 06.7" (LT)
D = 0° 30' 00.0"
L = 267.04'
T = 133.53'
R = 11,459.16'

8/17/99
22-SEP-2015 10:13
R:\OEC\Projects\W-5206AJ (45336.1.FR36) SR 2215 (Harnett Central Road)\roadway\proj\W-5206AJ_Rdy_psh_5.dgn

PROJECT REFERENCE NO.	SHEET NO.
W-5206AJ	6
ROADWAY DESIGN ENGINEER	HYDRAULICS ENGINEER

DOCUMENT NOT CONSIDERED FINAL UNLESS ALL SIGNATURES COMPLETED

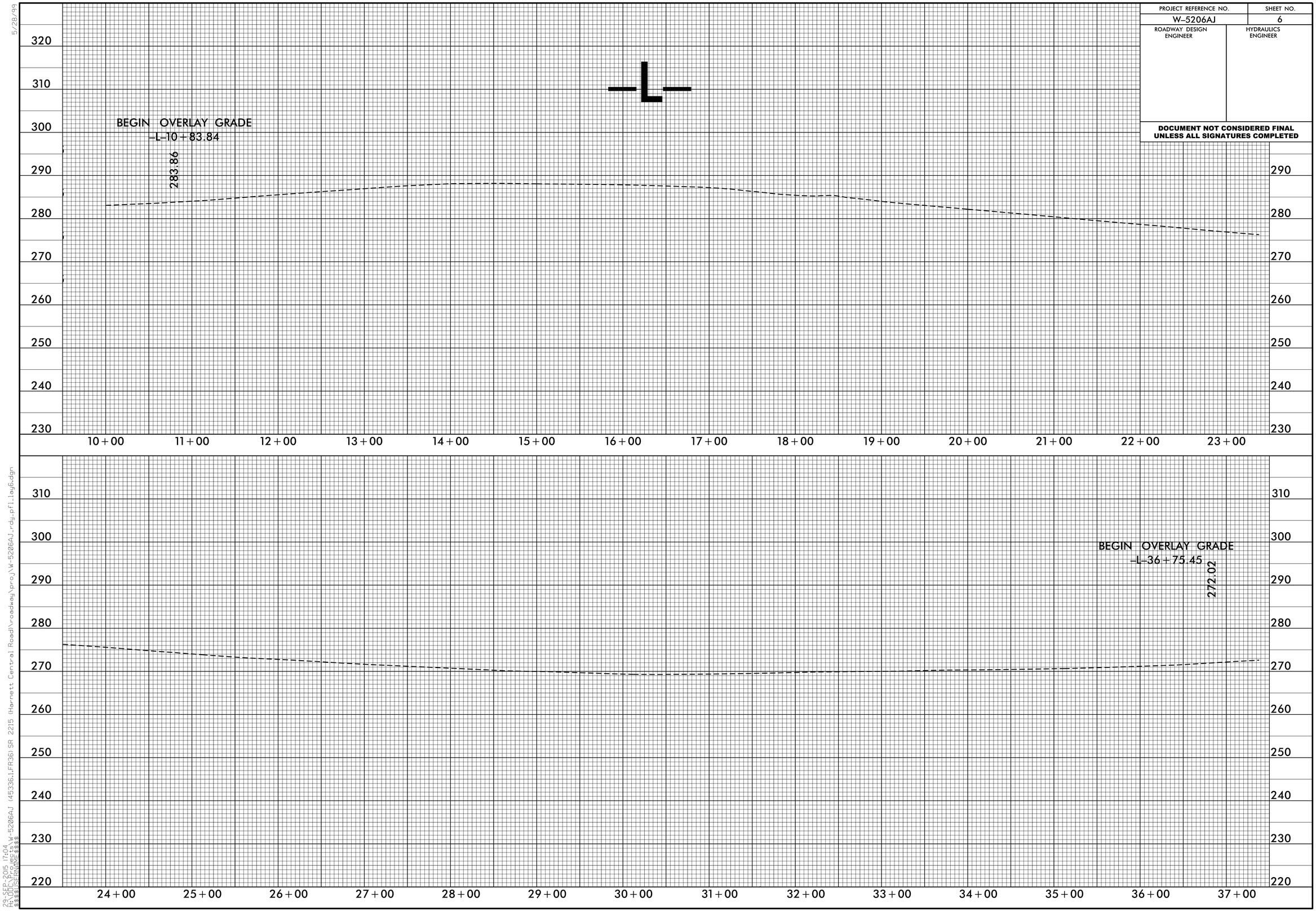

5/28/99

23-SEP-2015 17:04
H:\DOT\Projects\W-5206AJ (45336,1,FR36) SR 2215 (Harnett Central Road)\roadway\proj\W-5206AJ_rdy_pfl_lay6.dgn
$$USER$$

PROJECT REFERENCE NO.	SHEET NO.
W-5601AJ	7

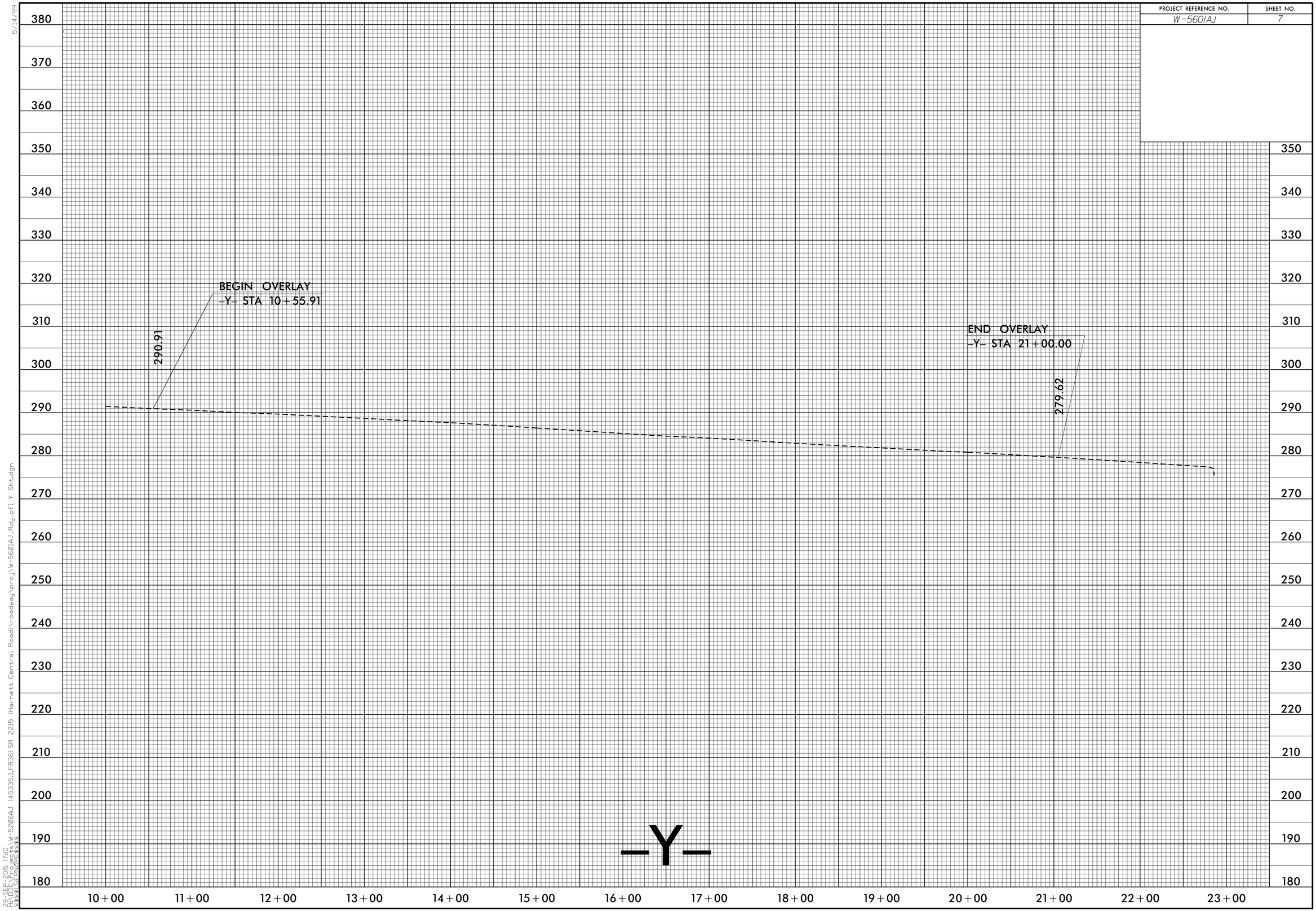

5/14/99
29-SEP-2015 17:10
H:\0TPROJECTS\W-5206AJ (45336.1.FR36) SR 2215 (Harnett Central Road)\roadway\proj\W-5601AJ_Rdy.pfl Y Sht.dgn
$$USERNAME$$

PROJECT REFERENCE NO.	SHEET NO.
W-5206AJ	EC-1

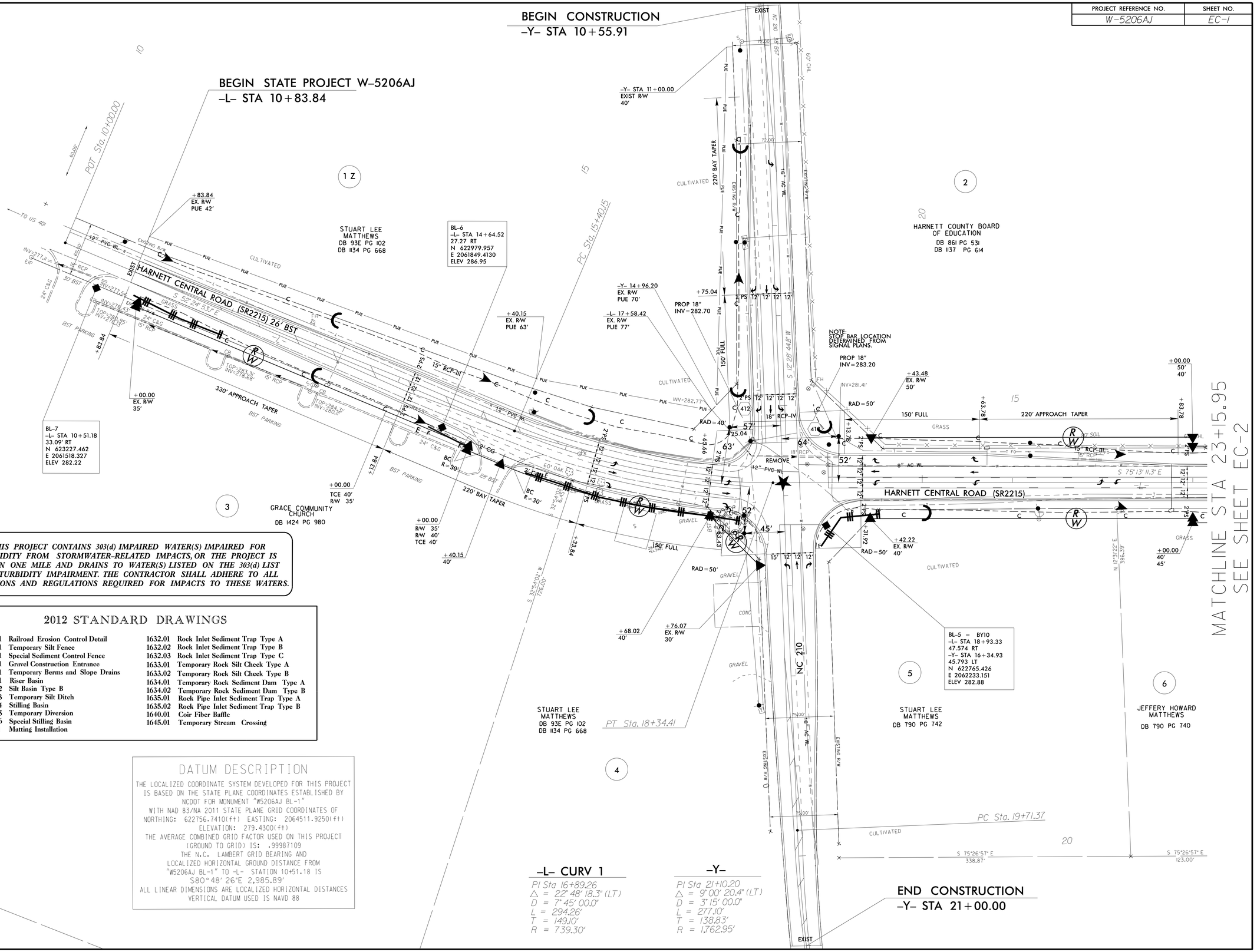

MATCHLINE STA 23+15.95
SEE SHEET EC-2

THIS PROJECT CONTAINS 303(d) IMPAIRED WATER(S) IMPAIRED FOR TURBIDITY FROM STORMWATER-RELATED IMPACTS, OR THE PROJECT IS WITHIN ONE MILE AND DRAINS TO WATER(S) LISTED ON THE 303(d) LIST FOR TURBIDITY IMPAIRMENT. THE CONTRACTOR SHALL ADHERE TO ALL CONDITIONS AND REGULATIONS REQUIRED FOR IMPACTS TO THESE WATERS.

2012 STANDARD DRAWINGS

1604.01	Railroad Erosion Control Detail	1632.01	Rock Inlet Sediment Trap Type A
1605.01	Temporary Silt Fence	1632.02	Rock Inlet Sediment Trap Type B
1606.01	Special Sediment Control Fence	1632.03	Rock Inlet Sediment Trap Type C
1607.01	Gravel Construction Entrance	1633.01	Temporary Rock Silt Check Type A
1622.01	Temporary Berms and Slope Drains	1633.02	Temporary Rock Silt Check Type B
1630.01	Riser Basin	1634.01	Temporary Rock Sediment Dam Type A
1630.02	Silt Basin Type B	1634.02	Temporary Rock Sediment Dam Type B
1630.03	Temporary Silt Ditch	1635.01	Rock Pipe Inlet Sediment Trap Type A
1630.04	Stilling Basin	1635.02	Rock Pipe Inlet Sediment Trap Type B
1630.05	Temporary Diversion	1640.01	Coir Fiber Baffle
1630.06	Special Stilling Basin	1645.01	Temporary Stream Crossing
1631.01	Matting Installation		

DATUM DESCRIPTION

THE LOCALIZED COORDINATE SYSTEM DEVELOPED FOR THIS PROJECT IS BASED ON THE STATE PLANE COORDINATES ESTABLISHED BY NCDOT FOR MONUMENT "W5206AJ BL-1"
WITH NAD 83/NA 2011 STATE PLANE GRID COORDINATES OF
NORTHING: 622756.7410(ft) EASTING: 2064511.9250(ft)
ELEVATION: 279.4300(ft)
THE AVERAGE COMBINED GRID FACTOR USED ON THIS PROJECT (GROUND TO GRID) IS: .99987109
THE N.C. LAMBERT GRID BEARING AND LOCALIZED HORIZONTAL GROUND DISTANCE FROM "W5206AJ BL-1" TO -L- STATION 10+51.18 IS
S80°48' 26"E 2,985.89'
ALL LINEAR DIMENSIONS ARE LOCALIZED HORIZONTAL DISTANCES
VERTICAL DATUM USED IS NAVD 88

-L- CURV 1

PI Sta 16+89.26
△ = 22° 48' 18.3" (LT)
D = 7° 45' 00.0"
L = 294.26'
T = 149.10'
R = 739.30'

-Y-

PI Sta 21+10.20
△ = 9° 00' 20.4" (LT)
D = 3° 15' 00.0"
L = 277.10'
T = 138.83'
R = 1,762.95'

END CONSTRUCTION
-Y- STA 21+00.00

REVISIONS

8/17/99

23-SEP-2015 17:27
R:\Roadway\Proj\W5206AJ_EC_sht1.dgn
$$$$USERNAME$$$$
W5206AJ (45336.1.FR36) SR 2215 (Harnett Central Road)

PROJECT REFERENCE NO.	SHEET NO.
W-5206AJ	EC-2

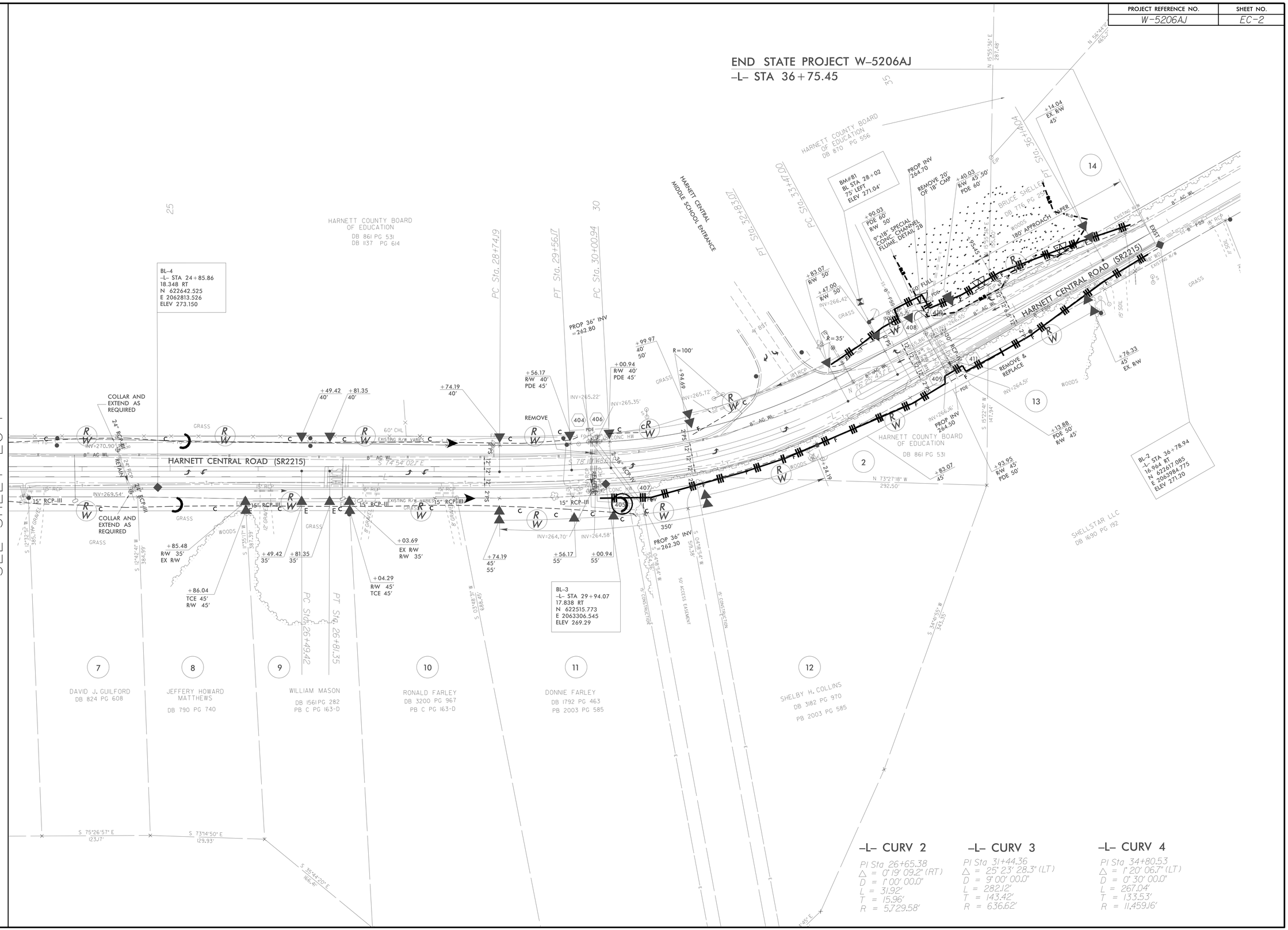

REVISIONS

8/17/99

29-SEP-2015 16:45
H:\DOT\Projects\W-5206AJ (45336.1.FR36) SR 2215 (Harnett Central Road)\roadway\proj\W5206AJ_EC_sht2.dgn
hoodlp

PROJECT REFERENCE NO.	SHEET NO.
W-5206AJ	Sig. 1.0

PHASING DIAGRAM

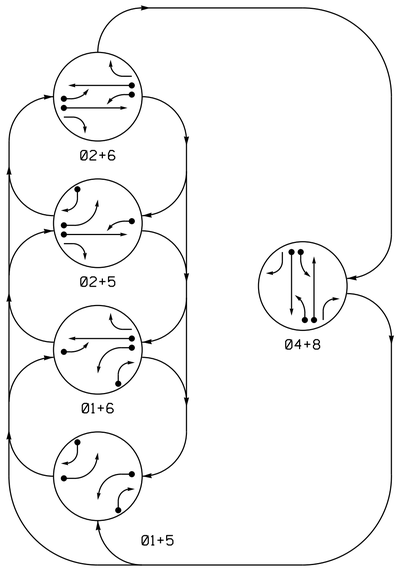

PHASING DIAGRAM DETECTION LEGEND

- DETECTED MOVEMENT
- UNDETECTED MOVEMENT (OVERLAP)
- UNSIGNALIZED MOVEMENT
- PEDESTRIAN MOVEMENT

TABLE OF OPERATION

SIGNAL FACE	PHASE 01+5	01+6	02+5	02+6	04+8	FLASH
11	~~←~~	~~←~~	~~F Y~~	~~F Y~~	~~R~~	~~Y~~
21,22	R	R	G	G	R	Y
41	~~R~~	~~R~~	~~R~~	~~R~~	~~F Y~~	~~R~~
42	R	R	R	R	G	R
43	R/←	R	R/←	R	G	R
51	~~←~~	~~F Y~~	~~←~~	~~F Y~~	~~R~~	~~Y~~
61,62	R	G	R	G	R	Y
81	~~R~~	~~R~~	~~R~~	~~R~~	~~F Y~~	~~R~~
82	R	R	R	R	G	R
83	R/←	R/←	R	R	G	R

SIGNAL FACE I.D.

All Heads L.E.D.

OASIS 2070 LOOP & DETECTOR INSTALLATION CHART

INDUCTIVE LOOPS					DETECTOR PROGRAMMING						
LOOP	SIZE (FT)	DISTANCE FROM STOPBAR (FT)	TURNS	NEW LOOP	PHASE	CALLING	EXTENSION	FULL TIME DELAY	STRETCH TIME	DELAY TIME	SYSTEM LOOP	NEW CARD
1A	6X40	0	2-4-2	Y	1	Y	Y	-	-	15	-	Y
					6	Y	Y	Y	-	3	-	Y
1B	6X40	0	2-4-2	Y	1	Y	Y	-	-	15	-	Y
2A	6X6	420	6	Y	2	Y	Y	-	-	-	-	Y
4A	6X40	0	2-4-2	Y	4	Y	Y	-	-	-	-	Y
4B	6X40	0	2-4-2	Y	4	Y	Y	-	-	3	-	Y
5A	6X40	0	2-4-2	Y	5	Y	Y	-	-	15	-	Y
					2	Y	Y	Y	-	3	-	Y
5B	6X40	0	2-4-2	Y	5	Y	Y	-	-	15	-	Y
6A	6X6	420	6	Y	6	Y	Y	-	-	-	-	Y
8A	6X40	0	2-4-2	Y	8	Y	Y	-	-	-	-	Y
8B	6X40	0	2-4-2	Y	8	Y	Y	-	-	3	-	Y

5 Phase
Fully Actuated
Isolated

NOTES

1. Refer to "Roadway Standard Drawings NCDOT" dated January 2012 and "Standard Specifications for Roads and Structures" dated January 2012.
2. Do not program signal for late night flashing operation unless otherwise directed by the Engineer.
3. Phase 1 and/or phase 5 may be lagged.
4. Set all detector units to presence mode.
5. Locate new cabinet so as not to obstruct sight distance of vehicles turning right on red.

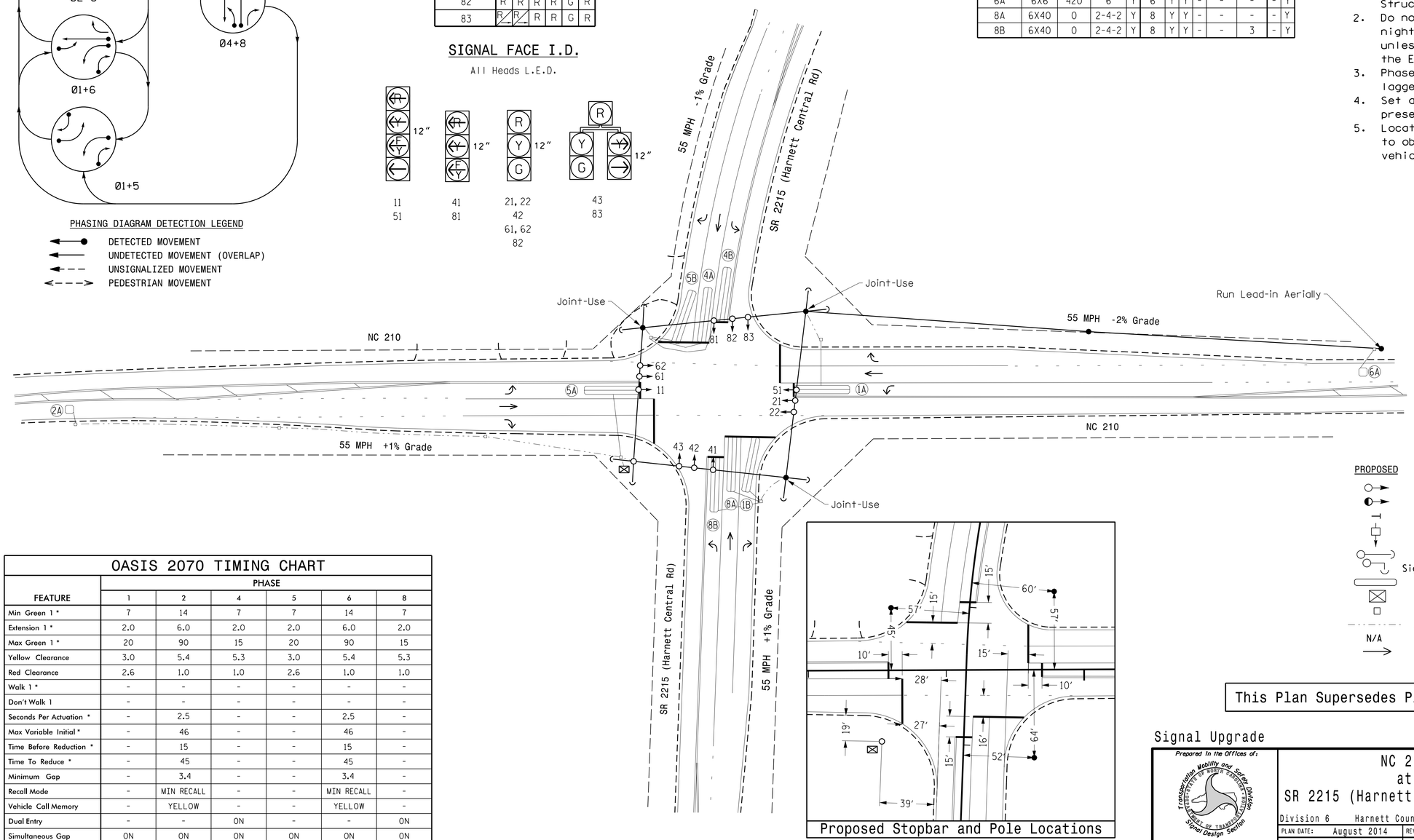

Proposed Stopbar and Pole Locations

LEGEND

PROPOSED		EXISTING
	Traffic Signal Head	
	Modified Signal Head	N/A
	Sign	
	Pedestrian Signal Head With Push Button & Sign	
	Signal Pole with Guy	
	Signal Pole with Sidewalk Guy	
	Inductive Loop Detector	
	Controller & Cabinet	
	Junction Box	
	2-in Underground Conduit	
N/A	Right of Way	
	Directional Arrow	

OASIS 2070 TIMING CHART

FEATURE	PHASE 1	2	4	5	6	8
Min Green 1 *	7	14	7	7	14	7
Extension 1 *	2.0	6.0	2.0	2.0	6.0	2.0
Max Green 1 *	20	90	15	20	90	15
Yellow Clearance	3.0	5.4	5.3	3.0	5.4	5.3
Red Clearance	2.6	1.0	1.0	2.6	1.0	1.0
Walk 1 *	-	-	-	-	-	-
Don't Walk 1	-	-	-	-	-	-
Seconds Per Actuation *	-	2.5	-	-	2.5	-
Max Variable Initial *	-	46	-	-	46	-
Time Before Reduction *	-	15	-	-	15	-
Time To Reduce *	-	45	-	-	45	-
Minimum Gap	-	3.4	-	-	3.4	-
Recall Mode	-	MIN RECALL	-	-	MIN RECALL	-
Vehicle Call Memory	-	YELLOW	-	-	YELLOW	-
Dual Entry	-	-	ON	-	-	ON
Simultaneous Gap	ON	ON	ON	ON	ON	ON

* These values may be field adjusted. Do not adjust Min Green and Extension times for phases 2 and 6 lower than what is shown. Min Green for all other phases should not be lower than 4 seconds.

This Plan Supersedes Plan Sealed 10/07/2014

Signal Upgrade

Prepared in the Offices of:
Transportation Mobility and Safety Division
STATE OF NORTH CAROLINA DEPARTMENT OF TRANSPORTATION
Signal Design Section
750 N.Greenfield Pkwy,Garner,NC 27529

NC 210
at
SR 2215 (Harnett Central Road)

Division 6 Harnett County N of Lillington

PLAN DATE: August 2014 REVIEWED BY:
PREPARED BY: EM Minshew REVIEWED BY:

SCALE 0 40
1"=40'

REVISIONS	INIT.	DATE

SEAL
NORTH CAROLINA PROFESSIONAL SEAL 029904 ENGINEER JASON P. GALLOWAY

DocuSigned by: Jason Galloway 2/23/2015
9700EA7D4B1B4D... DATE

SIG. INVENTORY NO. 06-0644

23-FEB-2015 15:57
S:*TTSSUMITS\Signals\Signal Design Section\Eastern Region\Div-06\06-0644\06-0644_sig_dsn_20150223.dgn
jgalloway

PROJECT REFERENCE NO.	SHEET NO.
W-5206AJ	Sig. 1.1

EDI MODEL 2018ECL-NC CONFLICT MONITOR PROGRAMMING DETAIL

(remove jumpers and set switches as shown)

REMOVE DIODE JUMPERS 1-5, 1-6, 1-9, 1-11, 2-5, 2-6, 2-9, 2-11, 4-8, 4-10, 4-12, 5-9, 5-11, 6-9, 6-11, 8-10, 8-12, 9-11, and 10-12.

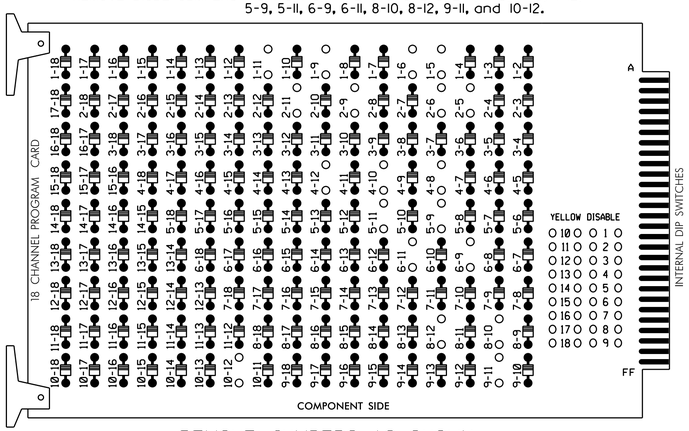

REMOVE JUMPERS AS SHOWN

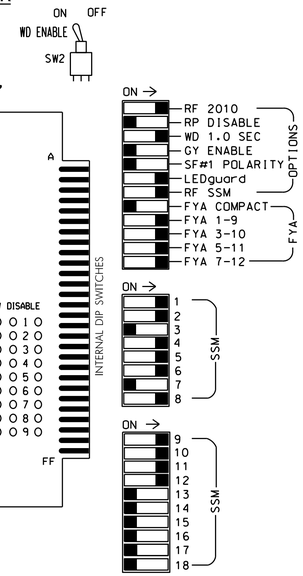

■ = DENOTES POSITION OF SWITCH

NOTES:

1. Card is provided with all diode jumpers in place. Removal of any jumper allows its channels to run concurrently.
2. Ensure jumpers SEL2-SEL5 and SEL9 are present on the monitor board.
3. Ensure that Red Enable is active at all times during normal operation.
4. Connect serial cable from conflict monitor to comm. port 1 of 2070 controller. Ensure conflict monitor communicates with 2070.

NOTES

1. To prevent "flash-conflict" problems, insert red flash program blocks for all unused vehicle load switches in the output file. The installer shall verify that signal heads flash in accordance with the Signal Plans.
2. Program phases 4 and 8 for Dual Entry.
3. Enable Simultaneous Gap-Out for all phases.
4. Program phases 2 and 6 for Variable Initial and Gap Reduction.
5. Program phases 2 and 6 for Start Up In Green.
6. Program phases 2 and 6 for Yellow Flash and overlaps 1 and 2 as Wag Overlaps.

EQUIPMENT INFORMATION

CONTROLLER.....2070L
CABINET.....332 W/ AUX
SOFTWARE.....ECONOLITE OASIS
CABINET MOUNT.....BASE
OUTPUT FILE POSITIONS...18 WITH AUX. OUTPUT FILE
LOAD SWITCHES USED.....S1,S2,S5,S7,S8,S11,AUX S1, AUX S2,AUX S4,AUX S5
PHASES USED.....1,2,4,5,6,8
OVERLAP "A".....1+2
OVERLAP "B".....8
OVERLAP "C".....5+6
OVERLAP "D".....4

SIGNAL HEAD HOOK-UP CHART

LOAD SWITCH NO.	S1		S2	S3	S4	S5	S6	S7		S8	S9	S10	S11	S12	AUX S1	AUX S2	AUX S3	AUX S4	AUX S5	AUX S6
CMU CHANNEL NO.	1		2	13	3	4	14	5		6	15	7	8	16	9	10	17	11	12	18
PHASE	1		2	2 PED	3	4	4 PED	5		6	6 PED	7	8	8 PED	OLA	OLB	SPARE	OLC	OLD	SPARE
SIGNAL HEAD NO.	11★	83	21,22	NU	NU	42,43	NU	43	51★	61,62	NU	NU	82,83	NU	11★	81★	NU	51★	41★	NU
RED		✳	128			101		✳		134			107							
YELLOW			129			102				135			108							
GREEN			130			103				136			109							
RED ARROW															A121	A124		A114	A101	
YELLOW ARROW		126						132							A122	A125		A115	A102	
FLASHING YELLOW ARROW															A123	A126		A116	A103	
GREEN ARROW	127	127						133	133											

NU = Not Used

✳ Denotes install load resistor. See load resistor installation detail this sheet.

★ See pictorial of head wiring in detail below.

FYA SIGNAL WIRING DETAIL

(wire signal heads as shown)

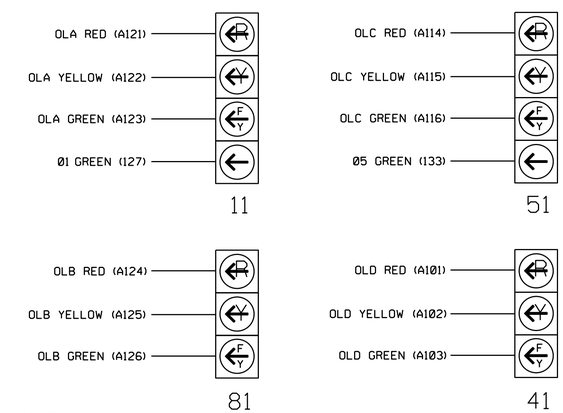

NOTE

The sequence display for signal heads 11 and 51 requires special logic programming. See sheet 2 for programming instructions.

INPUT FILE POSITION LAYOUT

(front view)

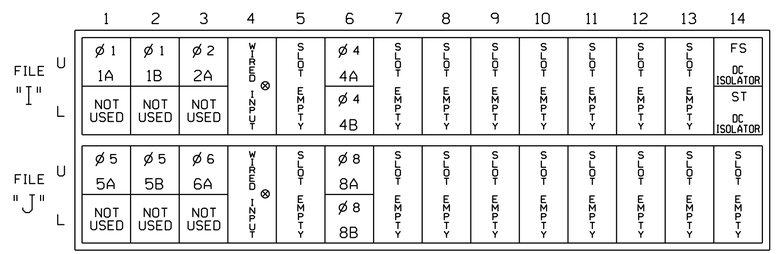

EX.: 1A, 2A, ETC. = LOOP NO.'S

FS = FLASH SENSE
ST = STOP TIME

⊗ Wired Input - Do not populate slot with detector card

INPUT FILE CONNECTION & PROGRAMMING CHART

LOOP NO.	LOOP TERMINAL	INPUT FILE POS.	PIN NO.	INPUT ASSIGNMENT NO.	DETECTOR NO.	NEMA PHASE	CALL	EXTEND	FULL TIME DELAY	STRETCH TIME	DELAY TIME
1A[1]	TB2-1,2	I1U	56	18	1	1	Y	Y			15
	-	J4U	48	10	26	6	Y	Y	Y		3
1B	TB2-5,6	I2U	39	1	2	1	Y	Y			15
2A	TB2-9,10	I3U	63	25	32	2	Y	Y			
4A	TB4-9,10	I6U	41	3	4	4	Y	Y			
4B	TB4-11,12	I6L	45	7	14	4	Y	Y			3
5A[2]	TB3-1,2	J1U	55	17	5	5	Y	Y			15
	-	I4U	47	9	22	2	Y	Y	Y		3
5B	TB3-5,6	J2U	40	2	6	5	Y	Y			15
6A	TB3-9,10	J3U	64	26	36	6	Y	Y			
8A	TB5-9,10	J6U	42	4	8	8	Y	Y			
8B	TB5-11,12	J6L	46	8	18	8	Y	Y			3

[1] Add jumper from I1-W to J4-W, on rear of input file.

[2] Add jumper from J1-W to I4-W, on rear of input file.

INPUT FILE POSITION LEGEND: J2L
FILE J
SLOT 2
LOWER

LOAD RESISTOR INSTALLATION DETAIL

(install resistors as shown below)

ACCEPTABLE VALUES

VALUE (ohms)	WATTAGE
1.5K - 1.9K	25W (min)
2.0K - 3.0K	10W (min)

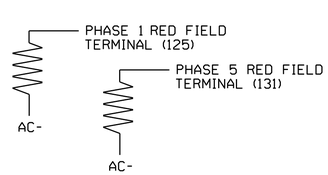

THIS PLAN SUPERSEDES THE THE PLAN SEALED ON 10/8/2014.

THIS ELECTRICAL DETAIL IS FOR THE SIGNAL DESIGN: 06-0644
DESIGNED: August 2014
SEALED: 2/23/2015
REVISED: N/A

Electrical Detail - Sheet 1 of 2

ELECTRICAL AND PROGRAMMING DETAILS FOR:

Prepared in the Offices of:
Transportation Mobility and Safety Division
STATE OF NORTH CAROLINA DEPARTMENT OF TRANSPORTATION
Signals Management Section
750 N.Greenfield Pkwy,Garner,NC 27529

NC 210
at
SR 2215 (Harnett Central Road)

Division 6 Harnett County N of Lillington

PLAN DATE: February 2015 REVIEWED BY: JTR
PREPARED BY: S. Armstrong REVIEWED BY:

REVISIONS	INIT.	DATE

SEAL
NORTH CAROLINA PROFESSIONAL SEAL 008453 ENGINEER JOHN T. ROWE, JR.
DocuSigned by: John T. Rowe, Jr. 3/2/2015
641D60C145EE4F5...
DATE
SIG. INVENTORY NO. 06-0644

02-MAR-2015 11:35
S:\TITLES\PITS\Signals\Workgroups\Sig Mgmt\Armstrong\060644_sm_ele_xxx.dgn
sarmstrong

PROJECT REFERENCE NO.	SHEET NO.
W-5206AJ	Sig. 1.2

LOGICAL I/O PROCESSOR PROGRAMMING DETAIL
TO PRODUCE SPECIAL FYA-PPLT SIGNAL SEQUENCE

(program controller as shown below)

1. FROM MAIN MENU PRESS '2' (PHASE CONTROL), THEN '1' (PHASE CONTROL FUNCTIONS). SCROLL TO THE BOTTOM OF THE MENU AND ENABLE ACT LOGIC COMMANDS 1, 2, 3, 4, 5 AND 6.

2. FROM MAIN MENU PRESS '6' (OUTPUTS), THEN '3' (LOGICAL I/O PROCESSOR).

```
LOGICAL I/O COMMAND #1  (+/-COMMAND#)
IF  ACTIVE PHASE       #1  IS ON
AND RED CLEAR ON PHASE #1  IS ON

SCROLL DOWN

THEN:
SET OUTPUT  ASSIGNMENT #50 ON
SET OUTPUT  ASSIGNMENT #51 OFF
```

NOTE: LOGIC FOR PHASE 1 RED CLEAR WHEN TRANSITIONING FROM PHASE 1 TO PHASE 2 (HEAD 11).

PRESS '+'

```
LOGICAL I/O COMMAND #2  (+/-COMMAND#)
IF  ACTIVE PHASE       #1  IS ON

SCROLL DOWN

THEN:
SET OUTPUT  ASSIGNMENT #52 OFF
```

NOTE: LOGIC FOR SWITCHING FLASHING YELLOW ARROW "OFF" DURING PHASE 1 (HEAD 11).

PRESS '+'

```
LOGICAL I/O COMMAND #3  (+/-COMMAND#)
IF  YELLOW ON PHASE    #1  IS ON

SCROLL DOWN

THEN:
SET OUTPUT  ASSIGNMENT #51 ON
```

NOTE: LOGIC FOR YELLOW ARROW CLEARANCE FROM PHASE 1 (HEAD 11).

PRESS '+'

```
LOGICAL I/O COMMAND #4  (+/-COMMAND#)
IF  ACTIVE PHASE       #5  IS ON
AND RED CLEAR ON PHASE #5  IS ON

SCROLL DOWN

THEN:
SET OUTPUT  ASSIGNMENT #42 ON
SET OUTPUT  ASSIGNMENT #43 OFF
```

NOTE: LOGIC FOR PHASE 5 RED CLEAR WHEN TRANSITIONING FROM PHASE 5 TO PHASE 6 (HEAD 51).

PRESS '+'

```
LOGICAL I/O COMMAND #5  (+/-COMMAND#)
IF  ACTIVE PHASE       #5  IS ON

SCROLL DOWN

THEN:
SET OUTPUT  ASSIGNMENT #44 OFF
```

NOTE: LOGIC FOR SWITCHING FLASHING YELLOW ARROW "OFF" DURING PHASE 5 (HEAD 51).

PRESS '+'

```
LOGICAL I/O COMMAND #6  (+/-COMMAND#)
IF  YELLOW ON PHASE    #5  IS ON

SCROLL DOWN

THEN:
SET OUTPUT  ASSIGNMENT #43 ON
```

NOTE: LOGIC FOR YELLOW ARROW CLEARANCE FROM PHASE 5 (HEAD 51).

LOGIC I/O PROCESSOR PROGRAMMING COMPLETE

OUTPUT REFERENCE SCHEDULE

OUTPUT 42 = Overlap C Red
OUTPUT 43 = Overlap C Yellow
OUTPUT 44 = Overlap C Green
OUTPUT 50 = Overlap A Red
OUTPUT 51 = Overlap A Yellow
OUTPUT 52 = Overlap A Green

THIS ELECTRICAL PLAN SUPERSEDES THE THE PLAN SEALED ON 10/8/2014.

THIS ELECTRICAL DETAIL IS FOR
THE SIGNAL DESIGN: 06-0644
DESIGNED: August 2014
SEALED: 2/23/2015
REVISED: N/A

OVERLAP PROGRAMMING DETAIL

(program controller as shown below)

FROM MAIN MENU PRESS '8' (OVERLAPS), THEN '1' (VEHICLE OVERLAP SETTINGS).

```
PAGE 1: VEHICLE OVERLAP 'A' SETTINGS
PHASE:          ¦123456789101112131415 16
VEH OVL PARENTS:¦XX
VEH OVL NOT VEH:¦
VEH OVL NOT PED:¦
VEH OVL GRN EXT:¦
STARTUP COLOR: _ RED  _ YELLOW  _ GREEN
FLASH COLORS:  _ RED  _ YELLOW  X GREEN
SELECT VEHICLE OVERLAP OPTIONS:   (Y/N)
FLASH YELLOW IN CONTROLLER FLASH?...Y
GREEN EXTENSION (0-255 SEC).........0
YELLOW CLEAR (0=PARENT,3-25.5 SEC)..0.0
RED CLEAR (0=PARENT,0.1-25.5 SEC)...0.0
OUTPUT AS PHASE # (0=NONE, 1-16)....0
```

NOTICE GREEN FLASH

PRESS '+'

```
PAGE 1: VEHICLE OVERLAP 'B' SETTINGS
PHASE:          ¦123456789101112131415 16
VEH OVL PARENTS:¦       X
VEH OVL NOT VEH:¦
VEH OVL NOT PED:¦
VEH OVL GRN EXT:¦
STARTUP COLOR: _ RED  _ YELLOW  _ GREEN
FLASH COLORS:  _ RED  _ YELLOW  X GREEN
SELECT VEHICLE OVERLAP OPTIONS:   (Y/N)
FLASH YELLOW IN CONTROLLER FLASH?...N
GREEN EXTENSION (0-255 SEC).........0
YELLOW CLEAR (0=PARENT,3-25.5 SEC)..0.0
RED CLEAR (0=PARENT,0.1-25.5 SEC)...0.0
OUTPUT AS PHASE # (0=NONE, 1-16)....0
```

NOTICE GREEN FLASH

PRESS '+'

```
PAGE 1: VEHICLE OVERLAP 'C' SETTINGS
PHASE:          ¦123456789101112131415 16
VEH OVL PARENTS:¦   XX
VEH OVL NOT VEH:¦
VEH OVL NOT PED:¦
VEH OVL GRN EXT:¦
STARTUP COLOR: _ RED  _ YELLOW  _ GREEN
FLASH COLORS:  _ RED  _ YELLOW  X GREEN
SELECT VEHICLE OVERLAP OPTIONS:   (Y/N)
FLASH YELLOW IN CONTROLLER FLASH?...Y
GREEN EXTENSION (0-255 SEC).........0
YELLOW CLEAR (0=PARENT,3-25.5 SEC)..0.0
RED CLEAR (0=PARENT,0.1-25.5 SEC)...0.0
OUTPUT AS PHASE # (0=NONE, 1-16)....0
```

NOTICE GREEN FLASH

PRESS '+'

```
PAGE 1: VEHICLE OVERLAP 'D' SETTINGS
PHASE:          ¦123456789101112131415 16
VEH OVL PARENTS:¦  X
VEH OVL NOT VEH:¦
VEH OVL NOT PED:¦
VEH OVL GRN EXT:¦
STARTUP COLOR: _ RED  _ YELLOW  _ GREEN
FLASH COLORS:  _ RED  _ YELLOW  X GREEN
SELECT VEHICLE OVERLAP OPTIONS:   (Y/N)
FLASH YELLOW IN CONTROLLER FLASH?...N
GREEN EXTENSION (0-255 SEC).........0
YELLOW CLEAR (0=PARENT,3-25.5 SEC)..0.0
RED CLEAR (0=PARENT,0.1-25.5 SEC)...0.0
OUTPUT AS PHASE # (0=NONE, 1-16)....0
```

NOTICE GREEN FLASH

OVERLAP PROGRAMMING COMPLETE

FLASHER CIRCUIT MODIFICATION DETAIL

IN ORDER TO INSURE THAT SIGNALS FLASH CONCURRENTLY ON THE SAME APPROACH, MAKE THE FOLLOWING FLASHER CIRCUIT CHANGES:

1. ON REAR OF PDA - REMOVE WIRE FROM TERM. T2-4 AND TERMINATE ON T2-2.
2. ON REAR OF PDA - REMOVE WIRE FROM TERM. T2-5 AND TERMINATE ON T2-3.
3. REMOVE FLASHER UNIT 2.

THE CHANGES LISTED ABOVE TIES ALL PHASES AND OVERLAPS TO FLASHER UNIT 1.

Electrical Detail - Sheet 2 of 2

ELECTRICAL AND PROGRAMMING DETAILS FOR:

Prepared in the Offices of:
Transportation Mobility and Safety Division
Signals Management Section
750 N.Greenfield Pkwy,Garner,NC 27529

NC 210
at
SR 2215 (Harnett Central Road)

Division 6 Harnett County N of Lillington

PLAN DATE: February 2015	REVIEWED BY:	JTR	
PREPARED BY: S. Armstrong	REVIEWED BY:		

REVISIONS	INIT.	DATE

SEAL
NORTH CAROLINA PROFESSIONAL SEAL 008453 ENGINEER JOHN T. ROWE, JR.

DocuSigned by: John T. Rowe, Jr. 3/2/2015
641D60C145EF4F5 DATE

SIG. INVENTORY NO. 06-0644

27-FEB-2015 10:35
S:\ATSGUI\TS\Signals\Workgroups\Sig Man\armstrong\060644_sm_ele_xxx.dgn
armstrong

09/08/99

TIP PROJECT: W-5206AJ

T.I.P. NO.	SHEET NO.
W-5206AJ	UC-1

STATE OF NORTH CAROLINA
DIVISION OF HIGHWAYS

UTILITY CONSTRUCTION PLANS
HARNETT COUNTY

LOCATION: SR 2215 (HARNETT CENTRAL ROAD) AT THE INTERSECTION OF NC 210

TYPE OF WORK: WATER LINE & FSS RELOCATION

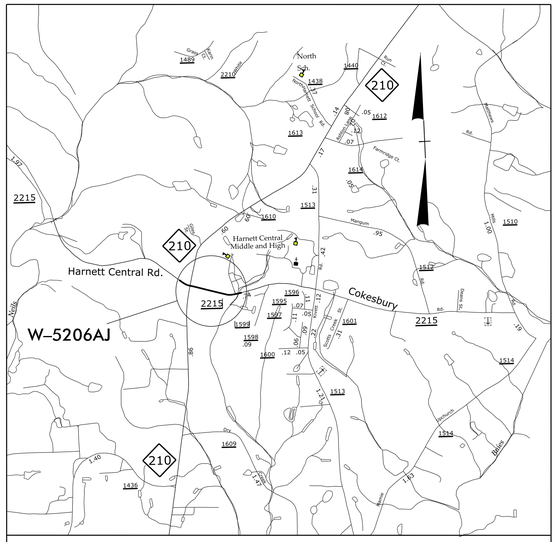

VICINITY MAP

NAD 83

END TIP PROJECT W-5206AJ
-L- POT STA 36+75.45

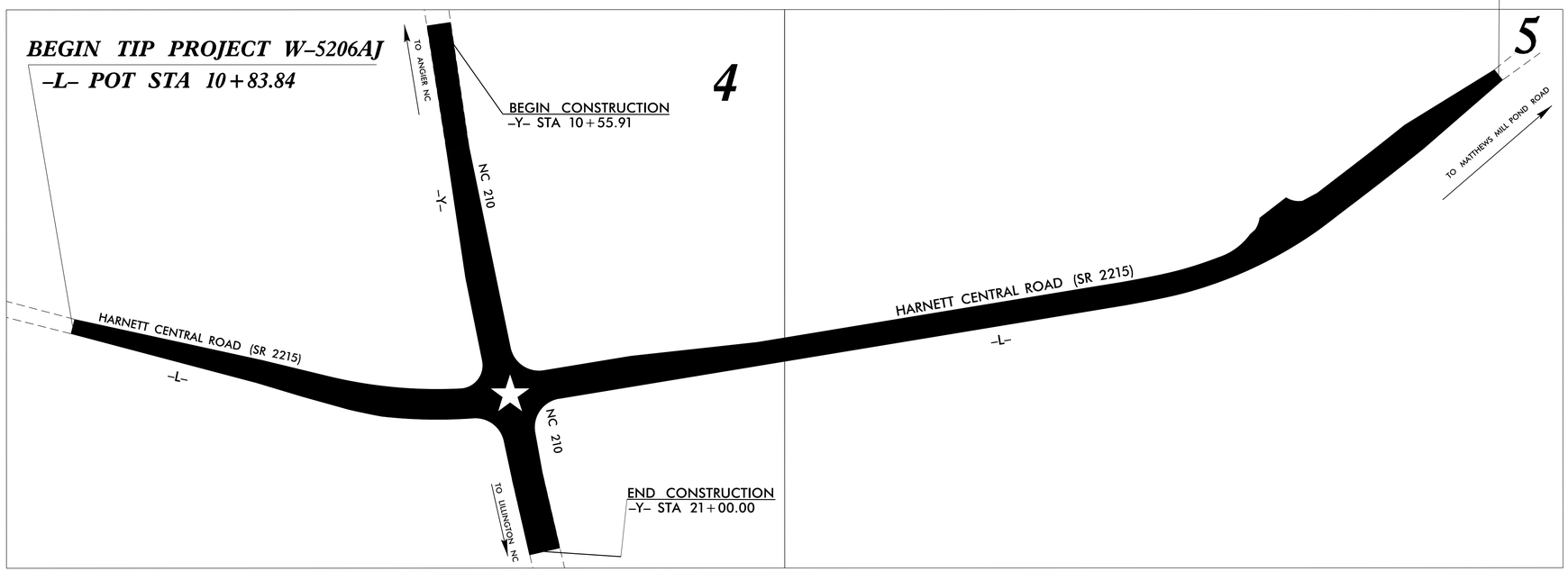

GRAPHIC SCALES

50 25 0 50 100
PLANS

50 25 0 50 100
PROFILE (HORIZONTAL)

10 5 0 10 20
PROFILE (VERTICAL)

INDEX OF SHEETS

SHEET NO.	DESCRIPTION
UC-1	TITLE SHEET
UC-2	UTILITY SYMBOLOGY
UC-3 THRU UC-3A	NOTES
UC-3B THRU UC-3C	DETAILS
UC-4 THRU UC-5	UTILITY CONSTRUCTION SHEETS
UC-6 THUR UC-7	PROFILE SHEETS

WATER AND SEWER OWNERS ON PROJECT

(1) HARNETT COUNTY - (WATER & SEWER)

SEAL

DIVISION OF HIGHWAYS
UTILITIES UNIT
UTILITIES ENGINEERING

1555 MAIL SERVICES CENTER
RALEIGH NC 27699-1555
PHONE (919) 707-6690
FAX (919) 250-4151

Roger Worthington, P.E. — UTILITIES SECTION ENGINEER
Bo Hemphill, P.E. — UTILITIES SQUAD LEADER PROJECT ENGINEER
Rick Handlin — UTILITIES PROJECT DESIGNER

29-SEP-2015 13:24
H:\DDC\Projects\W-5206AJ (45336.1.FR36) SR 2215 (Harnett Central Road)\UC Plans\W-5206AJ_ut_tsh_UC01_psh.dgn
$$$$USERNAME$$$$

PROJECT REFERENCE NO.	SHEET NO.
W-5206AJ	UC-2

STATE OF NORTH CAROLINA
DIVISION OF HIGHWAYS

UTILITIES PLAN SHEET SYMBOLS

PROPOSED WATER SYMBOLS

- Water Line (Sized as Shown) — 12" WL
- 11¼ Degree Bend
- 22½ Degree Bend
- 45 Degree Bend
- 90 Degree Bend
- Plug
- Tee
- Cross
- Reducer
- Gate Valve — GV
- Butterfly Valve — BV
- Tapping Valve — TGV
- Line Stop — LS
- Line Stop with Bypass — LS/BP
- Blow Off — BO
- Fire Hydrant — PFH
- Relocate Fire Hydrant — RFH
- Remove Fire Hydrant — REM FH
- Water Meter — PWM
- Relocate Water Meter — RWM
- Remove Water Meter — REM WM
- Water Pump Station — PS(W)
- RPZ Backflow Preventer — PRPZ
- DCV Backflow Preventer — PBFP
- Relocate RPZ Backflow Preventer — RRPZ
- Relocate DCV Backflow Preventer — RBFP

PROPOSED SEWER SYMBOLS

- Gravity Sewer Line (Sized as Shown) — 12" SS
- Force Main Sewer Line (Sized as Shown) — 12" FSS
- Manhole (Sized per Note)
- Sewer Pump Station — PS(SS)

PROPOSED MISCELLANOUS UTILITIES SYMBOLS

- Power Pole
- Telephone Pole
- Joint Use Pole
- Telephone Pedestal — TEL PED
- Utility Line by Others (Type as Shown) — PROP O/H POW LINES
- Trenchless Installation — 12" TL INSTALL
- Encasement by Open Cut — 24" ENCAS BY OC
- Encasement — 24" ENCASEMENT
- Thrust Block
- Air Release Valve — AR
- Utility Vault — UV
- Concrete Pier — CP
- Steel Pier — SP
- Plan Note — NOTE
- Pay Item Note — PAY ITEM

EXISTING UTILITIES SYMBOLS

- Power Pole
- Telephone Pole
- Joint Use Pole
- Utility Pole
- Utility Pole with Base
- H-Frame Pole
- Power Transmission Line Tower
- Water Manhole
- Power Manhole
- Telephone Manhole
- Sanitary Sewer Manhole
- Hand Hole for Cable
- Power Transformer
- Telephone Pedestal
- CATV Pedestal
- Gas Valve
- Gas Meter
- Located Miscellaneous Utility Object
- Abandoned According to Utility Records — AATUR
- End of Information — E.O.I.
- *Underground Power Line
- *Underground Telephone Cable
- *Underground Telephone Conduit
- *Underground Fiber Optics Telephone Cable
- *Underground TV Cable
- *Underground Fiber Optics TV Cable
- *Underground Gas Pipeline
- Aboveground Gas Pipeline — A/G Gas
- *Underground Water Line
- Aboveground Water Line — A/G Water
- *Underground Gravity Sanitary Sewer Line — SS
- Aboveground Gravity Sanitary Sewer Line — A/G Sanitary Sewer
- *Underground SS Forced Main Line
- Underground Unknown Utility Line — 2UTL
- SUE Test Hole
- Water Meter
- Water Valve
- Fire Hydrant
- Sanitary Sewer Cleanout

*For Existing Utilities

- Utility Line Drawn from Record (Type as Shown)
- Designated Utility Line (Type as Shown)

REV: 2/1/2012

5/14/99
29-SEP-2015 13:25
R:\Roadway\Proj\36inch_Garrett Central Road\UC Plans\W-5206AJ_ut_sym_UC02_psh.dgn
$$$$USERNAME$$$$

PROJECT REFERENCE NO.	SHEET NO.
W-5206AJ	UC-3

DESIGNED BY:
DRAWN BY: RDH
CHECKED BY:
APPROVED BY:
REVISED:

NORTH CAROLINA DEPARTMENT OF TRANSPORTATION

UTILITIES ENGINEERING SEC.
PHONE:(919)707-6690
FAX:(919)250-4151

UTILITY CONSTRUCTION PLANS ONLY

UTILITY CONSTRUCTION

UTILITY CONSTRUCTION

GENERAL NOTES:

1. THE PROPOSED UTILITY CONSTRUCTION SHALL MEET THE APPLICABLE REQUIREMENTS OF THE NC DEPARTMENT OF TRANSPORTATION'S "STANDARD SPECIFICATIONS FOR ROADS AND STRUCTURES" DATED JANUARY 2012.

2. THE EXISTING UTILITIES BELONG TO HARNETT COUNTY PUBLIC UTILITIES .

3. ALL WATER LINES TO BE INSTALLED WITHIN COMPLIANCE OF THE RULES AND REGULATIONS OF THE NORTH CAROLINA DEPARTMENT OF ENVIRONMENTAL AND NATURAL RESOURCES, DIVISION OF ENVIRONMENTAL HEALTH. ALL SEWER LINES TO BE INSTALLED WITHIN COMPLIANCE OF THE RULES AND REGULATIONS OF THE NORTH CAROLINA DEPARTMENT OF ENVIRONMENT AND NATURAL RESOURCES, DIVISION OF WATER QUALITY. PERFORM ALL WORK IN ACCORDANCE WITH THE APPLICABLE PLUMBING CODES.

4. THE UTILITY OWNER OWNS THE EXISTING UTILITY FACILITIES AND WILL OWN THE NEW UTILITY FACILITIES AFTER ACCEPTANCE BY THE DEPARTMENT. THE DEPARTMENT OWNS THE CONSTRUCTION CONTRACT AND HAS ADMINISTRATIVE AUTHORITY. COMMUNICATIONS AND DECISIONS BETWEEN THE CONTRACTOR AND UTILITY OWNER ARE NOT BINDING UPON THE DEPARTMENT OR THIS CONTRACT UNLESS AUTHORIZED BY THE ENGINEER. AGREEMENTS BETWEEN THE UTILITY OWNER AND CONTRACTOR FOR THE WORK THAT IS NOT PART OF THIS CONTRACT OR IS SECONDARY TO THIS CONTRACT ARE ALLOWED, BUT ARE NOT BINDING UPON THE DEPARTMENT.

5. PROVIDE ACCESS FOR THE DEPARTMENT PERSONNEL AND THE OWNER'S REPRESENTATIVES TO ALL PHASES OF CONSTRUCTION. NOTIFY DEPARTMENT PERSONNEL AND THE UTILITY OWNER TWO WEEKS PRIOR TO COMMENCEMENT OF ANY WORK AND TWO WEEK PRIOR TO SERVICE INTERRUPTION. KEEP UTILITY OWNERS' REPRESENTATIVES INFORMED OF WORK PROGRESS AND PROVIDE OPPORTUNITY FOR INSPECTION OF CONSTRUCTION AND TESTING.

6. THE PLANS DEPICT THE BEST AVAILABLE INFORMATION FOR THE LOCATION, SIZE, AND TYPE OF MATERIAL FOR ALL EXISTING UTILITIES. MAKE INVESTIGATIONS FOR DETERMINING THE EXACT LOCATION, SIZE, AND TYPE MATERIAL OF THE EXISTING FACILITIES AS NECESSARY FOR THE CONSTRUCTION OF THE PROPOSED UTILITIES AND FOR AVOIDING DAMAGE TO EXISTING FACILITIES. REPAIR ANY DAMAGE INCURRED TO EXISTING FACILITIES TO THE ORIGINAL OR BETTER CONDITION AT NO ADDITIONAL COST TO THE DEPARTMENT.

7. MAKE FINAL CONNECTIONS OF THE NEW WORK TO THE EXISTING SYSTEM WHERE INDICATED ON THE PLANS, AS REQUIRED TO FIT THE ACTUAL CONDITIONS, OR AS DIRECTED.

8. MAKE CONNECTIONS BETWEEN EXISTING AND PROPOSED UTILITIES AT TIMES MOST CONVENIENT TO THE PUBLIC, WITHOUT ENDANGERING THE UTILITY SERVICE, AND IN ACCORDANCE WITH THE UTILITY OWNER'S REQUIREMENTS. MAKE CONNECTIONS ON WEEKENDS, AT NIGHT, AND ON HOLIDAYS IF NECESSARY.

9. ALL UTILITY MATERIALS SHALL BE APPROVED PRIOR TO DELIVERY TO THE PROJECT. SEE 1500-7, " SUBMITTALS AND RECORDS" IN SECTION 1500 OF THE STANDARD SPECIFICATIONS.

5/14/99
29-SEP-2015 13:25
...6.1.FR36) SR 2215 (Harnett Central Road)\UC Plans\W-5206AJ_ut_notes_UC03_psh.dgn
$$$$USERNAME$$$$

PROJECT REFERENCE NO.	SHEET NO.
W-5206AJ	UC-3A

DESIGNED BY:
DRAWN BY: RDH
CHECKED BY:
APPROVED BY:
REVISED:

NORTH CAROLINA DEPARTMENT OF TRANSPORTATION

UTILITIES ENGINEERING SEC.
PHONE:(919)707-6690
FAX:(919)250-4151

UTILITY CONSTRUCTION

PROJECT SPECIFIC NOTES (WATER LINES)

The Utility Contractor shall notify Harnett County Department of Public Utilities (HCDPU) at least two weeks prior to construction commencing.

The Utility Contractor must schedule a pre-construction conference with Mr. Alan Moss, HCDPU Utility Construction Inspector at least two weeks prior to construction and the Utility Contractor must coordinate with HCDPU for regular inspection visitations and acceptance of the water system(s). Construction work shall be performed during the normal working hours of HCDPU which is 8:00 am 5:00 pm Monday through Friday. Holiday, night and weekend work shall only be done in extreme cases.

The Professional Engineer (PE) shall obtain and provide the NCDENR "Authorization to Construct"permit to the Utility Contractor before the construction of the water line shall begin. The Utility Contractor must post a copy of the NCDENR "Authorization to Construct"permit issued by the North Carolina Department of Environment and Natural Resources Division of Environmental Health, Public Water Supply Section (NCDENR-DEH,PWSS) on site prior to the start of construction. The permit must be maintained on site throughout the entire construction process of the proposed water lines that will serve this project.

The Professional Engineer (PE) shall provide HCDPU and the Utility Contractor with a set of NCDENR approved plans marked "Released For Construction"two weeks prior to construction commencing.

The Utility Contractor shall provide NCDOT and HCDPU Utility Construction Inspector material submittals and shop drawings for all project materials prior to the construction of any water lines, and associated water services. The materials to be used on the project must meet NCDOT Standard Specifications and the Project Special Provisions and be approved by the Engineer of Record prior to construction. All substandard materials or materials not approved for use by Harnett County and NCDOT found on the project site must be removed immediately when notified by the HCDPU Utility Construction Inspector.

The water main(s) all associated appurtenances shall be constructed in strict in accordance with NCDOT Standard Specifications and Project Special Provisions. The Utility Contractor shall be responsible to locate the newly installed water main(s) and all associated appurtenances for other utility companies and their contractors until the new water main(s) have been approved by the North Carolina Department of Environment and Natural Resources Division of Environmental Health, Public Water Supply Section (NCDENR-DEH, PWSS) and accepted by HCDPU.

Prior to acceptance, all services will be inspected to insure that they are installed at the proper depth. All relocated meter boxes must be flush with the ground level at finish grade and the relocated meter setters must be a minimum of 8" below the meter box lid. Meter setters shall be centered in the meter box and supported by brick, block or stone.

The Contractor shall provide the Engineer four (4) 24" x 36" bond prints and (1) 24" x 36" mylar prints of the "As-Built Record Drawings" signed and sealed by a Registered Professional Engineer "marked Record Drawings". Any field changes that were made during construction shall be properly documented in the "As-Built Record drawings". The " As-Built Record Drawings" shall include all parcel/lot numbers, water valves, valve markers, water meter setters/meters, meter vaults, fire hydrants, backflow preventers, manholes, sewer cleanouts and air release valves as installed by the contractor.

A digitals copy of the " As-Built Record Drawings" must be submitted to HCDPU in AutoCAD (dwg of dxf) format.

After the final certification has been accepted by NCDENR for the water and sewer line construction the contractor shall provide a warranty for all work and materials for the next 12 months.

Upon the receipt of the final certification, a copy will be forwarded to Mr. Alan Moss, Utility Construction Inspector HCDPU for a final inspection.

All fire hydrants installations in Harnett County must meet all requirements established by the Harnett County Fire Marshal's office. All fire hydrants installations must be inspected by the Harnett County Deputy Fire Marshal. The contractor shall notify the Fire Marshal at (910) 893-7580 once the construction is completed to request a site inspection of all relocated fire hydrants installations.

The Utility Contractor shall provide the Professional Engineer (PE) and HCDPU Utility Construction Inspector a set of red line drawings identifying the complete water system installed. The red line drawings should identify the materials, pipe sizes and approximate depths of the water lines as well as the gate valves, fire hydrants, meter setters, and all associated appurtenances for all water line(s) constructed in Harnett County. The red line drawings should clearly identify any deviations from the NCDENR approved plans. All change orders must be approved by HCDPU and the Professional Engineer (PE) in writing and properly documented in the red line field drawings.

Potable water mains crossing other utilities and non-potable water lines (sanitary sewer, storm sewer, RCP, etc.) shall be laid to provide a minimum vertical distance of twenty-four (24") inches between the potable water main and all other utilities. NCDOT requires the new water mains to be installed under the storm water lines. The potable water main shall be installed with twenty-four (24") inches of vertical separation and with ductile iron pipe.

All water lines 2" and larger shall be PVC SDR 21, 200# WP except where noted on the plans or profiles to use DI water pipe, Class 50.

All DI fittings and pipe restraint are incidental to the water line pay items. Concrete thrust blocking is required at all horizontal fitting in addition to the restraint along the pipe line with restrained retainer glands. At vertical bends use 2-3/4" bituminous coated steel rods between each bend instead of concrete thrust blocking with restrained retainer glands. See plans and profile for restraint lengths.

The relocated meters shall be installed at least one (1') foot inside the right-of-way or PUE and at least three (3') to five (5') feet from the property line between the lots.

The relocated fire hydrants shall be installed one (1') foot inside the right-of-way or PUE.

The Utility Contractor shall use polyethylene tubing SDR-9, 200 #WP for all water meter service lines less than 2".

The water main(s), fire hydrants, gate valves, service lines, meter setters and associated appurtenances must be rated for 200 psi and hydrostatically pressure tested to 200 psi. The hydrostatic pressure test(s) must be witnessed by the HCDPU Utility Construction Inspector. The Utility Contractor must notify HCDPU when they are ready to begin filling in lines and coordinate with Harnett County to witness all pressure testing.

All water mains will be constructed with SDR-21 PVC Pipe or Class 50 Ductile Iron Pipe rated for at least 200 psi or greater as shown on plans. All pipes must be protected during loading, transport, unloading, staging, and installation. PVC pipe must be protected from extended exposure to sunlight prior to installation.

All water mains will be flushed and disinfected in strict accordance with the Harnett County Standard Specifications For Flushing and Disinfection and the Project Special Provisions. All water samples collected for bacteria testing will be collected by the HCDPU Utility Construction Inspector and tested in the HCDPU Laboratory.

HCDPU requires that the Utility Contractor install tracer wire in the trench with all water lines. The tracer wire shall be 12 ga. insulated, solid copper conductor and it shall be terminated at the top of the valve boxes or manholes. No spliced wire connections shall be made underground on tracer wire installed in Harnett County. The tracer wire may be secured with duct tape to the bottom of the pipe before backfilling (See detail drawing). Do not use NCDOT specification concerning tracer wires, use this requirement.

The Utility Contractor shall spot dig to expose each utility pipe or line which may conflict with construction of proposed water line well in advance to verify locations of the existing utilities. The Utility Contractor shall provide both horizontal and vertical clearances to allow the Engineer to adjust the water line design in order to avoid conflicts with existing underground utilities. The Utility Contractor shall coordinate with the utility owner and be responsible for temporary relocation and/or securing existing utility poles, pipes, wires, cables, signs and/or utilities including services in accordance with the utility owner requirements during water line installation, grading and street construction.

The Utility Contractor must call the NC One Call Center at 811 or (800) 632-4949 to verify the location of existing utilities prior to the beginning of construction. Some of the existing utilities shown in these plans are taken from maps furnished by various utility companies and have not been physically located or verified by the P.E. (i.e. TELEPHONE, CABLE, WATER, SEWER, ELECTRICAL POWER, FIBER OPTIC, NATURAL GAS, ETC.). The Utility Contractor will be responsible to repair any and all damages to the satisfaction of the related utility company.

The Engineer of Record is responsible to insure that construction is, at all times, in compliance with accepted approved plans and specifications. No field changes to the approved plans are allowed without prior written approval by HCDPU. A copy of each engineer's field report is to be submitted to HCDPU as each such inspection is made on system improvements or testing is performed by the contractor. Water line infrastructure must pass all tests required by specifications and those of all applicable regulatory agencies. These tests include, but are not limited to: pressure test, bacteriological test, etc. A HCDPU Inspector must be present during testing and all test results shall be submitted to HCDPU. All tests must be satisfied before the final inspection will be scheduled with the HCDPU Inspector. The Engineer of Record must request in writing to schedule the final inspection once all construction is complete. The Engineer and the HCDPU Utility Construction Inspector shall prepare a written list of any defects or deficiencies noted during the final inspection, should any exist. Upon completion of the punch list, the Engineer will schedule another inspection.

Upon receipt of final certification, a copy will be forwarded to Mr. Alan Moss, Utility Construction Inspector HCDPU for a final inspection.

29-SEP-2015 13:26
R36)SR 2215 (Harnett Central Road)\UC Plans\W-5206AJ_ut_notes_UC03A_psh.dgn
$$$$USERNAME$$$$

PROJECT REFERENCE NO.	SHEET NO.
W-5206AJ	UC-3B
DESIGNED BY: RDH	
DRAWN BY: RDH	
CHECKED BY: RGW	
APPROVED BY: RGW	
REVISED:	
NORTH CAROLINA DEPARTMENT OF TRANSPORTATION	
UTILITIES ENGINEERING SEC. PHONE:(919)707-6690 FAX:(919)250-4151	UTILITY CONSTRUCTION PLANS ONLY

PROJECT TYPICAL DETAILS

NOTES:
1. CONCRETE SHALL BE 3,000 PSI MIN.
2. CONCRETE FOR THRUST BLOCKING SHALL BE KEPT FAIRLY DRY, THUS MAKING THE CONCRETE WEDGE SHAPE MORE EASILY FORMED WITH THE WIDEST PART (BLOCKING AREA) AGAINST UNDISTURBED SOIL.
3. NO CONCRETE SHALL COVER ANY BOLTS OR GLANDS.
4. ALL PIPING AND ACCESSORIES TO BE WRAPPED WITH 10 MIL. POLYETHYLENE PRIOR TO POURING BLOCKING.
5. VOLUME OF THRUST BLOCKING SHALL BE AS SHOWN ON THE THRUST BLOCKING SCHEDULE.

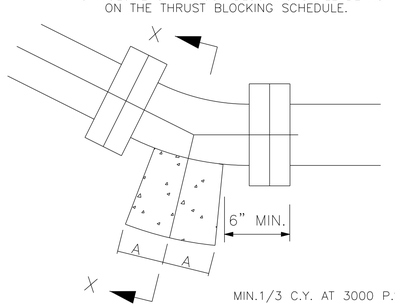

MIN.1/3 C.Y. AT 3000 P.S.I.

PLAN BENDS

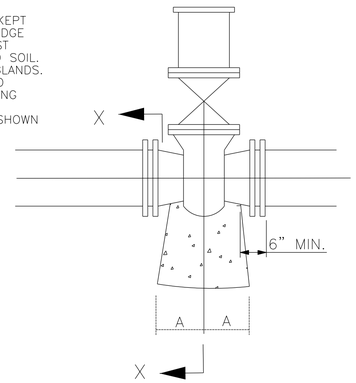

HYDRANT TEE PLAN TEES

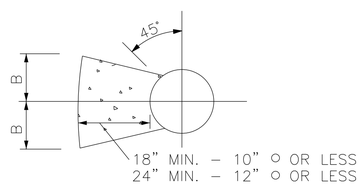

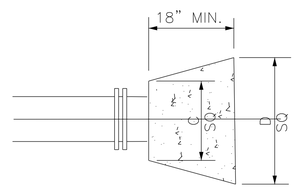

PIPE SIZE	90° BEND		45° BEND		221/2° BEND		11/4° BEND		TEE		PLUG	
	A	B	A	B	A	B	A	B	A	B	C	D
4"	8"	12"	8"	8"	6"	6"	6"	6"	8"	9"	10"	16"
6"	10"	12"	8"	10"	8"	8"	8"	8"	10"	10"	12"	18"
8"	15"	13"	10"	10"	8"	8"	8"	8"	10"	12"	12"	24"
10"	16"	14"	10"	12"	6"	10"	6"	10"	11"	14"	14"	25"
12"	20"	16"	12"	14"	8"	12"	8"	12"	14"	16"	16"	30"
14"	22"	18"	14"	16"	10"	14"	10"	14"	16"	18"	18"	34"
16"	26"	20"	16"	18"	12"	16"	12"	16"	18"	20"	20"	36"

THRUST BLOCK DETAIL (15)

NO SCALE

TRENCH DETAIL

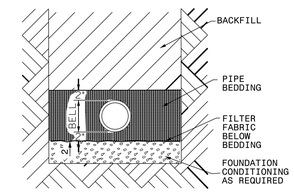

PLACE FOUNDATION CONDITIONING MATERIAL BELOW BEDDING IF REQUIRED, AS DIRECTED BY ENGINEER. PIPE BEDDED IN SELECT MATERIAL, CLASS IV. TRENCH BACKFILLED IN LOOSE 6" LAYERS COMPACTED TO TOP OF TRENCH USING LOCAL EXCAVATED MATERIAL IF APPROVED BY THE ENGINEER, OR SELECT MATERIAL. ALL MATERIAL SHALL BE FREE OF ROCKS, FOREIGN MATERIAL, AND FROZEN EARTH. COMPACTION SHALL BE TO APPROX. 95% DENSITY IN ACCORDANCE WITH AASHTO T-99 AS MODIFIED BY THE DEPARTMENT OF TRANSPORTATION.

MAXIMUM TRENCH WIDTH AT TOP OF PIPE

NOMINAL PIPE SIZE (INCHES)	TRENCH WIDTH (INCHES)	NOMINAL PIPE SIZE (INCHES)	TRENCH WIDTH (INCHES)
4	28	20	44
6	30	24	48
8	32	30	54
10	34	36	60
12	36	42	66
14	38	48	72
16	40	54	78
18	42		

5/14/99
22-SEP-2015 18:30
S:\Unitsen\Projects\W-5206AJ Harnett\Final Plans PDFs\W-5206AJ_ut_dtl_UC03B_psh.dgn
$$$$USERNAME$$$$

PROJECT REFERENCE NO.	SHEET NO.
W-5206AJ	UC-3C
DESIGNED BY:	
DRAWN BY: RDH	
CHECKED BY:	
APPROVED BY:	
REVISED:	
NORTH CAROLINA DEPARTMENT OF TRANSPORTATION	
UTILITIES ENGINEERING SEC. PHONE:(919)707-6690 FAX:(919)250-4151	UTILITY CONSTRUCTION PLANS ONLY

UTILITY CONSTRUCTION

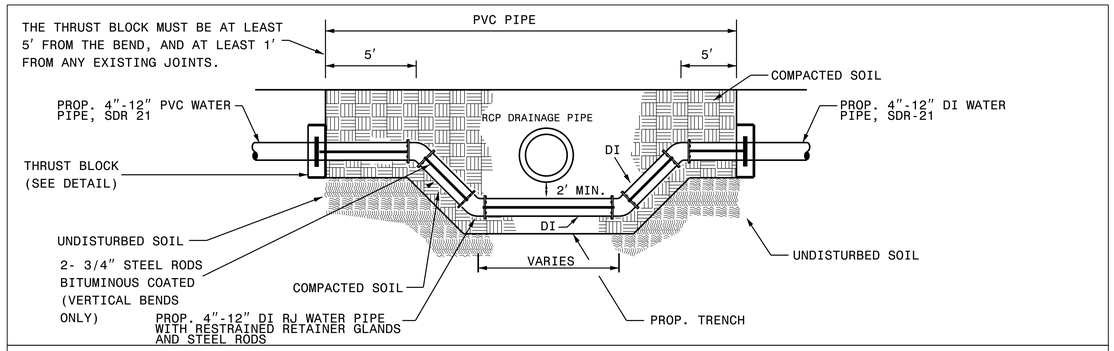

WATER PIPE CROSSING STORM DRAIN

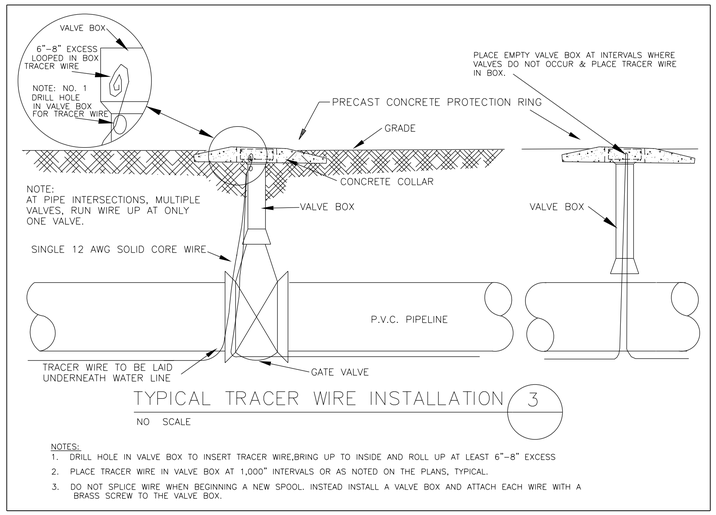

TYPICAL TRACER WIRE INSTALLATION (3)

NO SCALE

NOTES:
1. DRILL HOLE IN VALVE BOX TO INSERT TRACER WIRE,BRING UP TO INSIDE AND ROLL UP AT LEAST 6"-8" EXCESS
2. PLACE TRACER WIRE IN VALVE BOX AT 1,000" INTERVALS OR AS NOTED ON THE PLANS, TYPICAL.
3. DO NOT SPLICE WIRE WHEN BEGINNING A NEW SPOOL. INSTEAD INSTALL A VALVE BOX AND ATTACH EACH WIRE WITH A BRASS SCREW TO THE VALVE BOX.

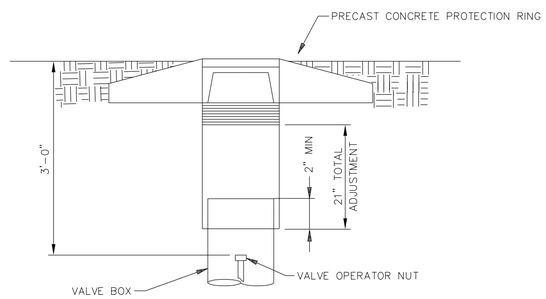

TYPICAL VALVE BOX DETAIL (2)

NO SCALE

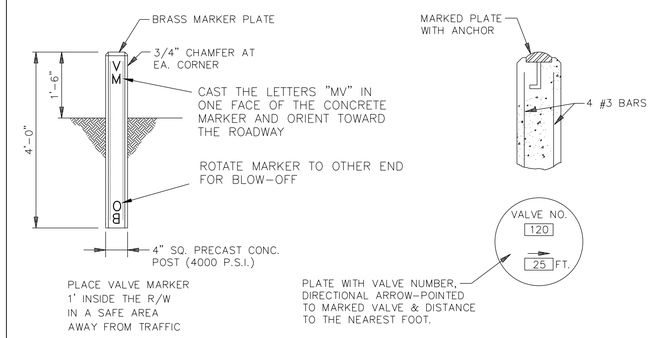

VALVE MARKER DETAIL (1)

NO SCALE

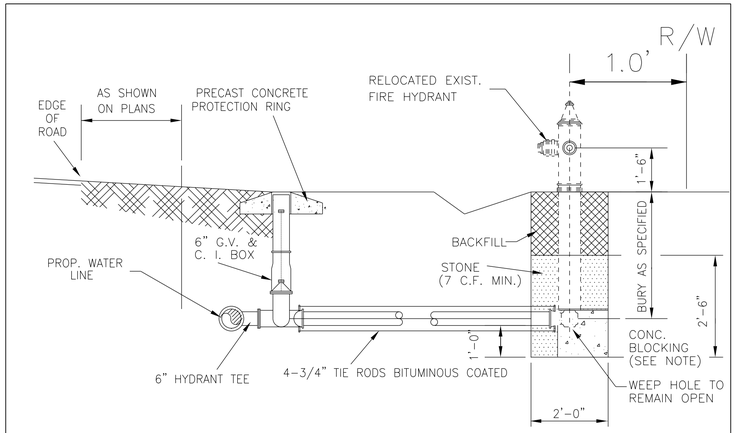

TYPICAL RELOCATED FIRE HYDRANT INSTALLATION DETAIL (W 6)

NO SCALE

SHOWN FOR CONFIGURING RELOCATED AND RECONNECTED WATER METER ASEMBLIES

ALL NEW FITTINGS VALVES, SERVICE TUBING AND NECESSARY COMPONENTS TO RECONNECT EXIST. WATER METERS ARE INCIDENTAL TO RECONNECT OR RELOCATE WATER METERS PAY ITEMS

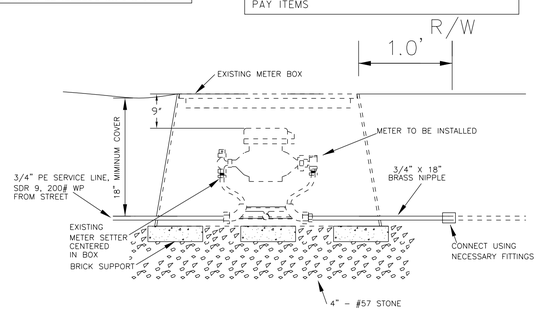

1. INCLUDE STONE IN PRICE OF METER BOX.
2. ALL BRASS FITTINGS SHALL BE COMPRESSION TYPE.

RELOCATE OR RECONNECT 3/4" METER DETAIL (W 14)

NO SCALE

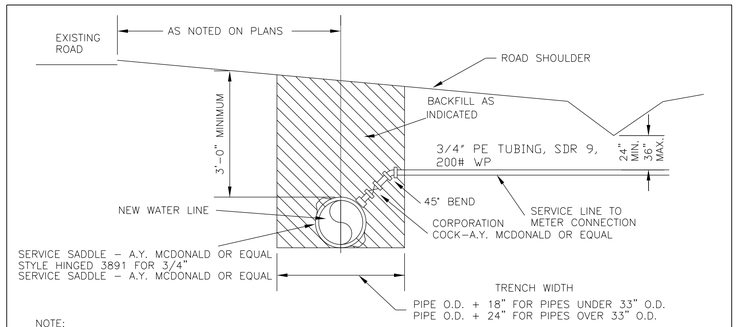

NOTE:
1. "SERVICE CONNECTION" IN PROPOSAL TO INCLUDE SERVICE SADDLE, 45° BEND, CORPORATION COCK AND ALL LABOR INVOLVED IN MAKING A COMPLETE SERVICE CONNECTION.
2. SERVICE PIPING TO BE 3/4"
3. ALL BRASS FITTINGS SHALL BE COMPRESSION TYPE

TYPICAL WATER SERVICE CONNECTION USING TAPPING SADDLE DETAIL (W 13)

NO SCALE

5/14/99
29-SEP-2015 13:27
R:\Roadway\Proj\36i_FR2361_STP-2015_Harnett Central Road\UC Plans\W-5206AJ_ut_dtl_UC03C_psh.dgn
$$$$USERNAME$$$$

PROJECT REFERENCE NO.	SHEET NO.
W-5206AJ	UC-3D
DESIGNED BY:	
DRAWN BY: RDH	
CHECKED BY:	
APPROVED BY:	
REVISED:	
NORTH CAROLINA DEPARTMENT OF TRANSPORTATION	
UTILITIES ENGINEERING SEC. PHONE:(919)707-6690 FAX:(919)250-4151	UTILITY CONSTRUCTION PLANS ONLY

UTILITY CONSTRUCTION

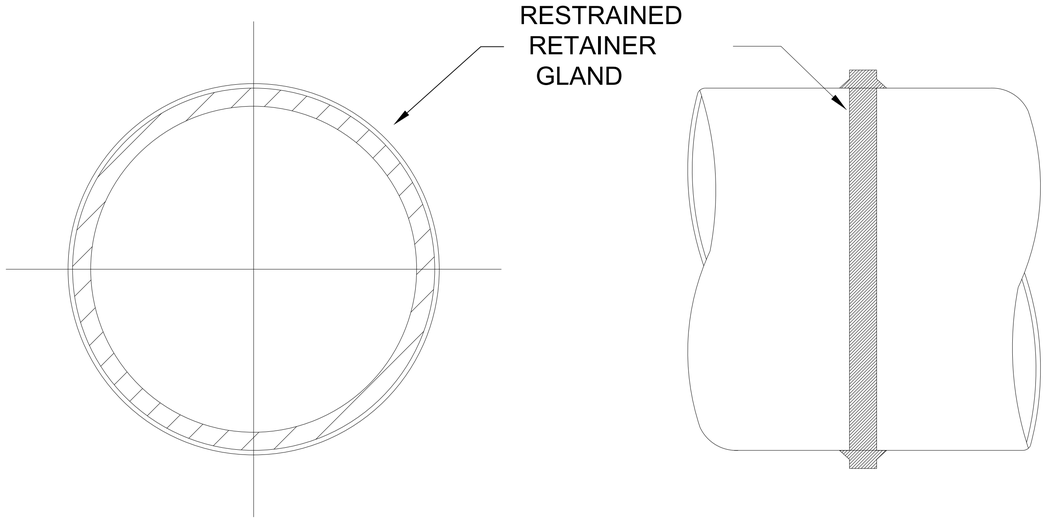

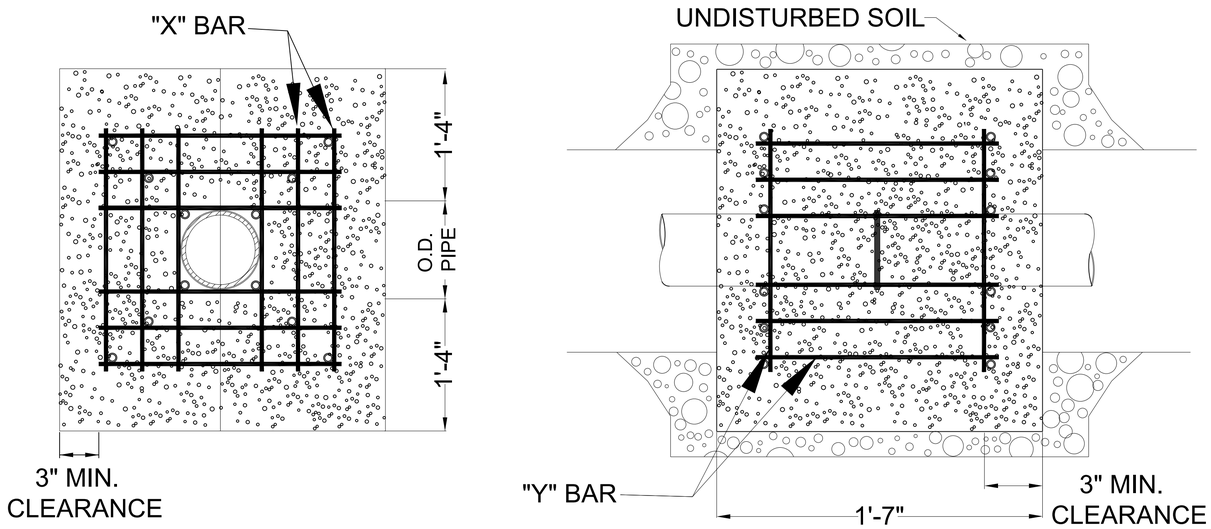

REINFORCING REQUIREMENTS

I.D. PIPE	REBAR SIZE	"X" BAR LENGTH	"X" BAR WEIGHT	"Y" BAR LENGTH	"Y" BAR WEIGHT	NO. REQUIRED
	#5	2'-2"+ O.D. PIPE	1.043 LBS/FT	1'-1"	1.1 LBS. EACH	X-24, Y-12

NOTES:

1. CONCRETE SHALL BE 3000 PSI AND TRANSIT MIXED.
2. REINFORCING BARS SHALL BE DEFORMED AND TIED TOGETHER.
3. TRENCH BOTTOM WIDTH IN VICINITY OF THRUST BLOCK INSTALLATION SHALL BE THE MINIMUM WIDTH.
4. BACKFILL TAMPED IN 6" LIFTS.

5/14/99
29-SEP-2015 13:27
R:\Utilities\Projects\W5206AJ_Harnett Central Road\UC Plans\W-5206AJ_ut_dtl_UC03D_psh.dgn
$$$$USERNAME$$$$

PROJECT REFERENCE NO.	SHEET NO.
W-5206AJ	UC-4
DESIGNED BY: RDH	
DRAWN BY: RDH	
CHECKED BY: RGW	
APPROVED BY: RGW	
REVISED:	
NORTH CAROLINA DEPARTMENT OF TRANSPORTATION	
UTILITIES ENGINEERING SEC. PHONE:(919)707-6690 FAX:(919)250-4151	UTILITY CONSTRUCTION PLANS ONLY

UTILITY CONSTRUCTION

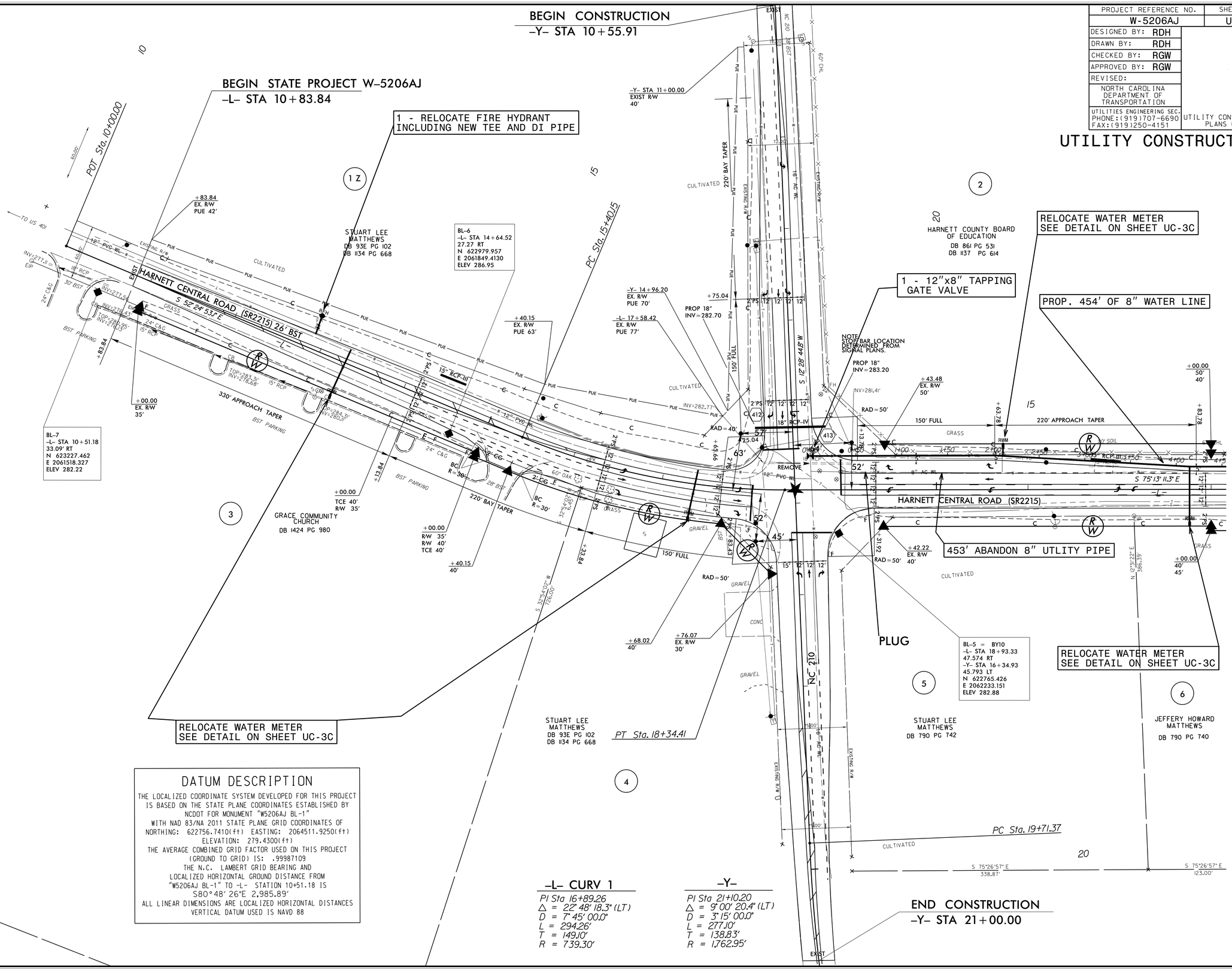

DATUM DESCRIPTION

THE LOCALIZED COORDINATE SYSTEM DEVELOPED FOR THIS PROJECT IS BASED ON THE STATE PLANE COORDINATES ESTABLISHED BY NCDOT FOR MONUMENT "W5206AJ BL-1"
WITH NAD 83/NA 2011 STATE PLANE GRID COORDINATES OF
NORTHING: 622756.7410(ft) EASTING: 2064511.9250(ft)
ELEVATION: 279.4300(ft)
THE AVERAGE COMBINED GRID FACTOR USED ON THIS PROJECT (GROUND TO GRID) IS: .99987109
THE N.C. LAMBERT GRID BEARING AND LOCALIZED HORIZONTAL GROUND DISTANCE FROM "W5206AJ BL-1" TO -L- STATION 10+51.18 IS
S80°48'26"E 2,985.89'
ALL LINEAR DIMENSIONS ARE LOCALIZED HORIZONTAL DISTANCES
VERTICAL DATUM USED IS NAVD 88

-L- CURV 1

PI Sta 16+89.26
△ = 22°48'18.3" (LT)
D = 7°45'00.0"
L = 294.26'
T = 149.10'
R = 739.30'

-Y-

PI Sta 21+10.20
△ = 9°00'20.4" (LT)
D = 3°15'00.0"
L = 277.10'
T = 138.83'
R = 1,762.95'

5/14/99

36L-F3 29-SEP-2015 17:01
geshaw
H:\Projects\SR 2215 Harnett Central Road\UC Plans\W-5206AJ_ut_rdy4_UC04_psh.dgn

PROJECT REFERENCE NO.	SHEET NO.
W-5206AJ	UC-5
DESIGNED BY: RDH	
DRAWN BY: RDH	
CHECKED BY: RGW	
APPROVED BY: RGW	
REVISED:	
NORTH CAROLINA DEPARTMENT OF TRANSPORTATION	
UTILITIES ENGINEERING SEC. PHONE:(919)707-6690 FAX:(919)250-4151	UTILITY CONSTRUCTION PLANS ONLY

UTILITY CONSTRUCTION

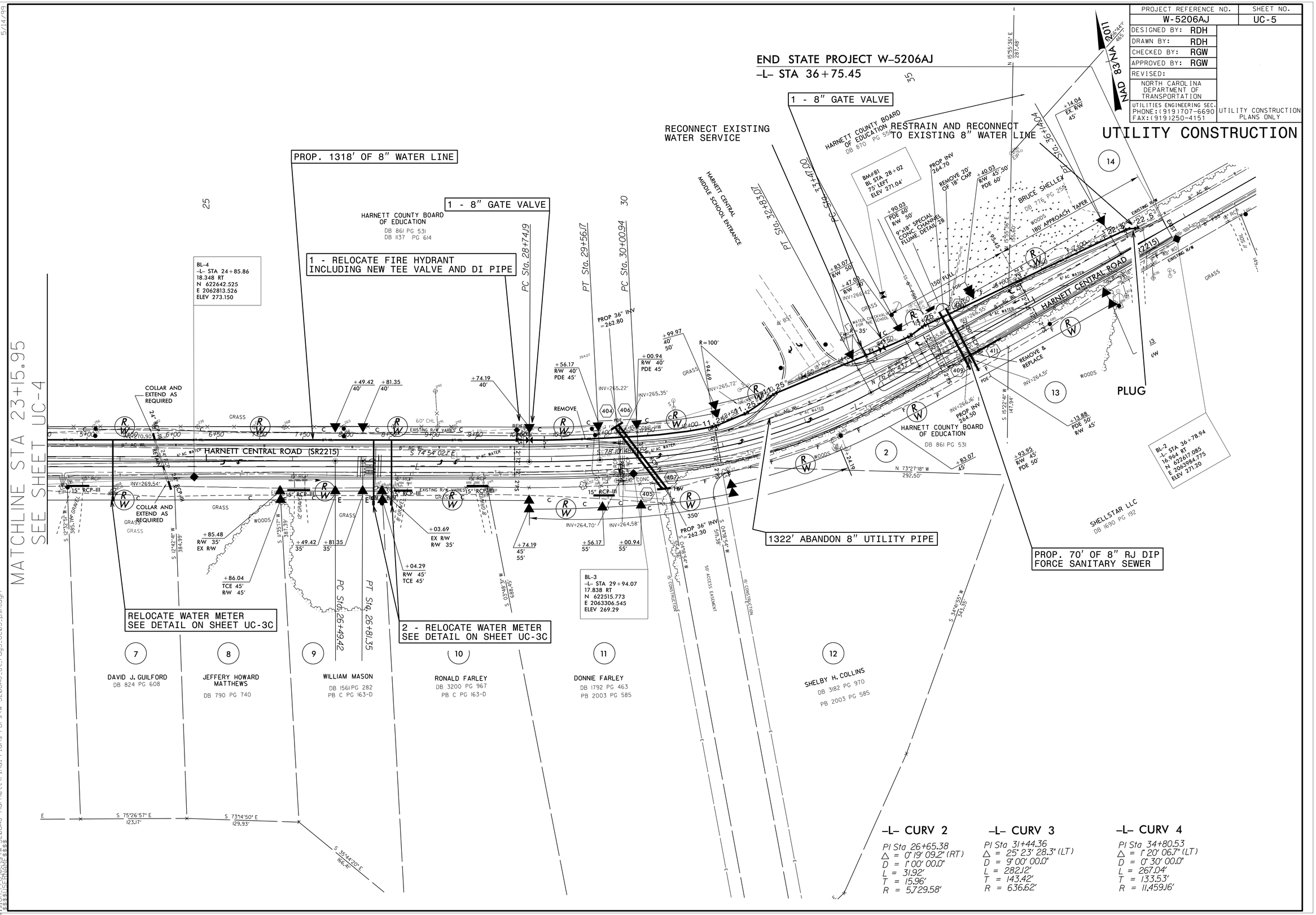

-L- CURV 2

PI Sta 26+65.38
Δ = 0° 19' 09.2" (RT)
D = 1° 00' 00.0"
L = 31.92'
T = 15.96'
R = 5,729.58'

-L- CURV 3

PI Sta 31+44.36
Δ = 25° 23' 28.3" (LT)
D = 9° 00' 00.0"
L = 282.12'
T = 143.42'
R = 636.62'

-L- CURV 4

PI Sta 34+80.53
Δ = 1° 20' 06.7" (LT)
D = 0° 30' 00.0"
L = 267.04'
T = 133.53'
R = 11,459.16'

5/14/99

28-SEP-2015 14:20
s:\Division\Project\Archive\W-5206AJ Harnett\Final Plans PDFs\W-5206AJ_ut_rdy5_UC05_psh.dgn
$USER$ $DGNNAME$

PROJECT REFERENCE NO.	SHEET NO.
W-5206AJ	UC-6

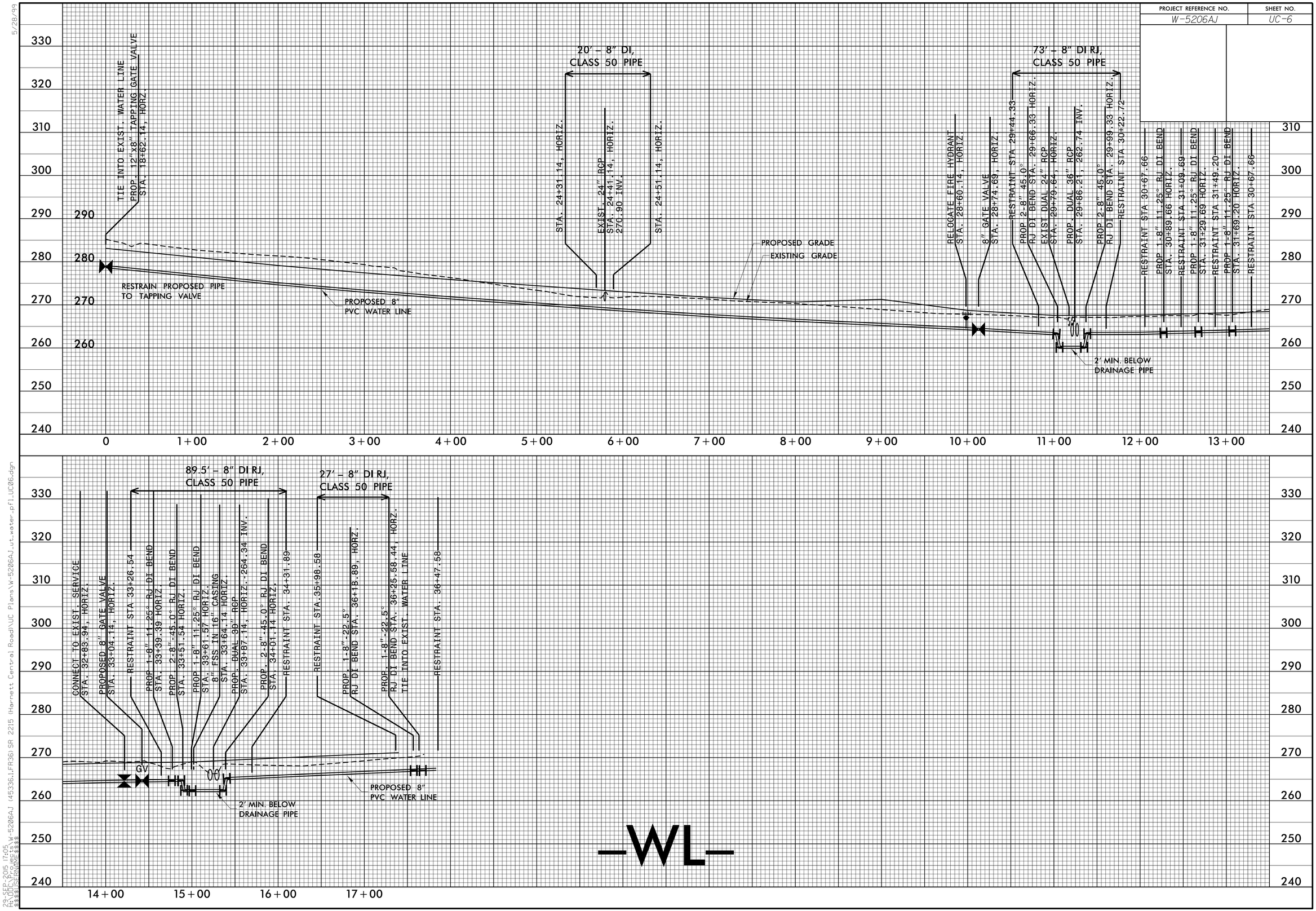

5/28/99

23-SEP-2015 17:05
H:\Projects\W-5206AJ (45336,1,FR36) SR 2215 (Harnett Central Road)\UC Plans\W-5206AJ_ut_water_pfl_UC06.dgn
ASSOCIATES, INC.

PROJECT REFERENCE NO.	SHEET NO.
W-5206AJ	UC-7

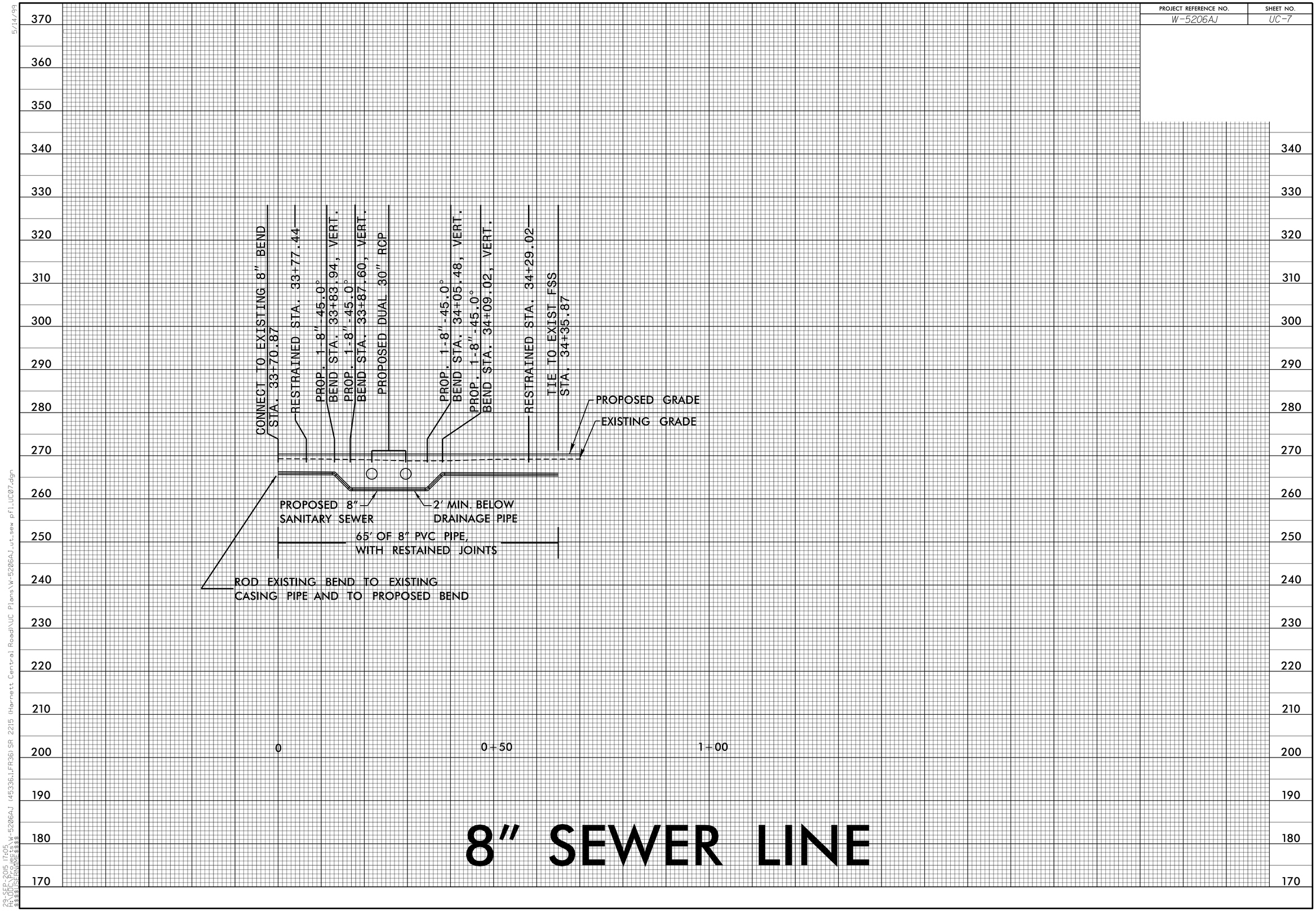

5/14/99
29-SEP-2015 17:05
H:\DOT\Roadways\W-5206AJ (45336.1.FR36) SR 2215 (Harnett Central Road)\UC Plans\W-5206AJ_ut_sew pfl_UC07.dgn
$$$$USERNAME$$$$

PROJECT REFERENCE NO.	SHEET NO.
W-5206AJ	EC-UC-8

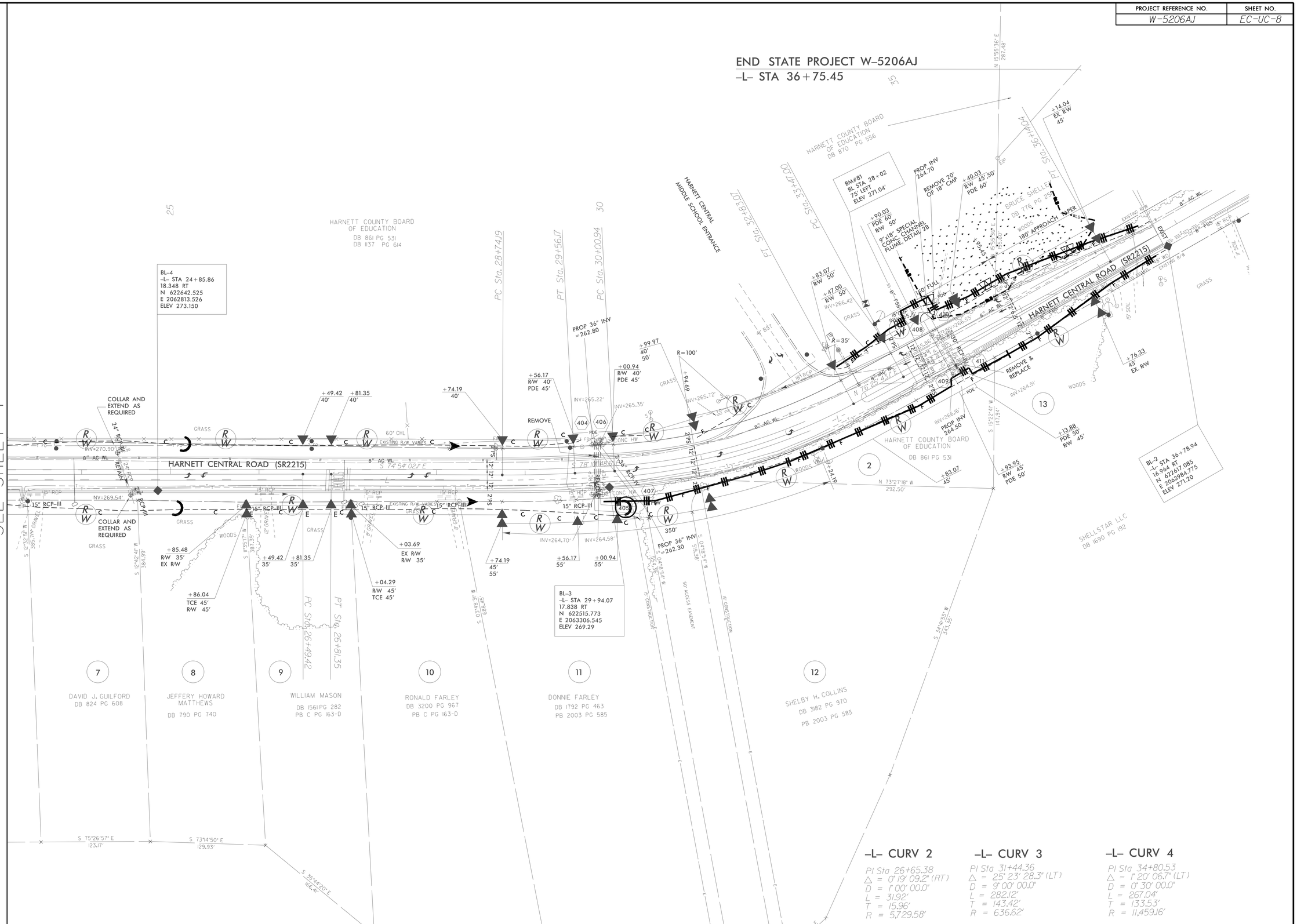

REVISIONS

8/17/99

29-SEP-2015 17:10
H:\DOT\Projects\W-5206AJ (45336.1.FR36) SR 2215 (Harnett Central Road)\UC Plans\W5206AJ_EC_UC08.dgn
pcsmith
41 Inch-Arch/24441

0 2.5 5	PROJ. REFERENCE NO.	SHEET NO.
	W-5206AJ	X-1

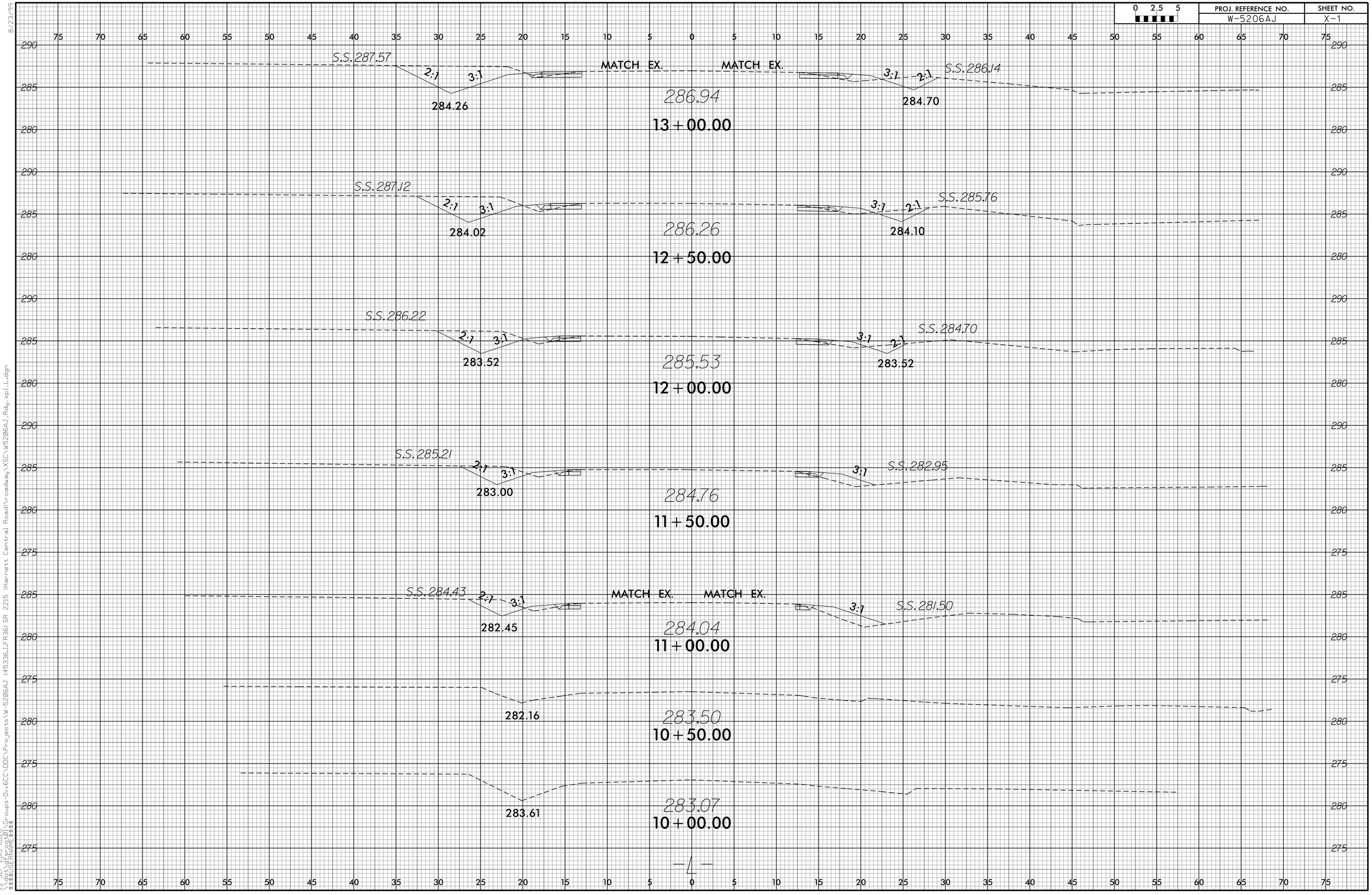

8/23/99

22-SEP-2015 10:20
$$$USER NAME$$$$ FS:\Groups-Div6CC\DDC\Projects\W-5206AJ (45336.1.FR36) SR 2215 (Harnett Central Road)\roadway\XSC\W5206AJ_Rdg_xpl_L.dgn

0 2.5 5	PROJ. REFERENCE NO.	SHEET NO.
	W-5206AJ	X-2

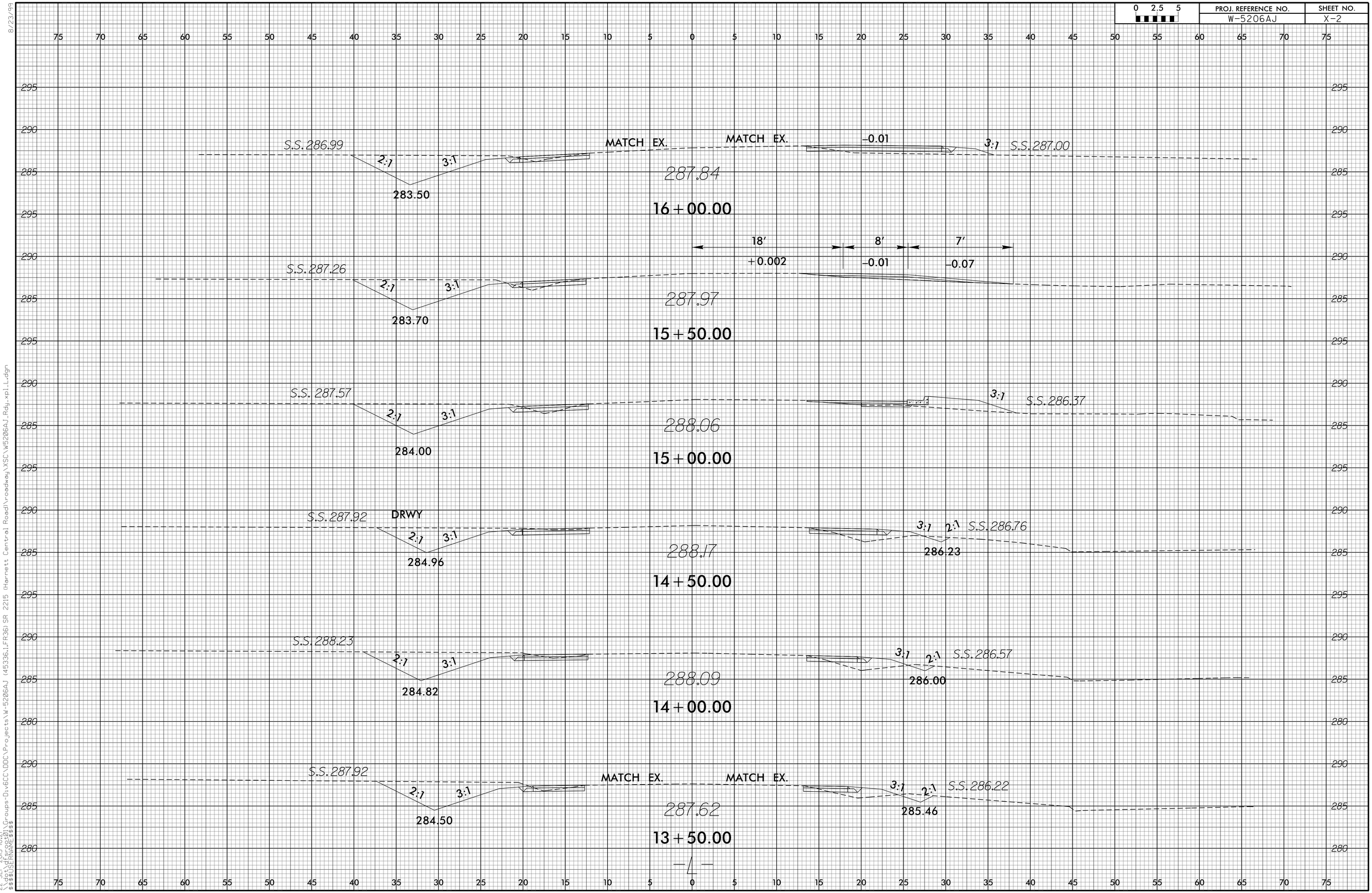

8/23/99

22-SEP-2015 10:21
$$$USER$$$$$$
$$$$DGN FILE NAME
C:\Groups-Div6CC\DDC\Projects\W-5206AJ (45336.1.FR36) SR 2215 (Harnett Central Road)\roadway\XSC\W5206AJ_Rdg_xpl_L.dgn

0 2.5 5	PROJ. REFERENCE NO.	SHEET NO.
	W-5206AJ	X-3

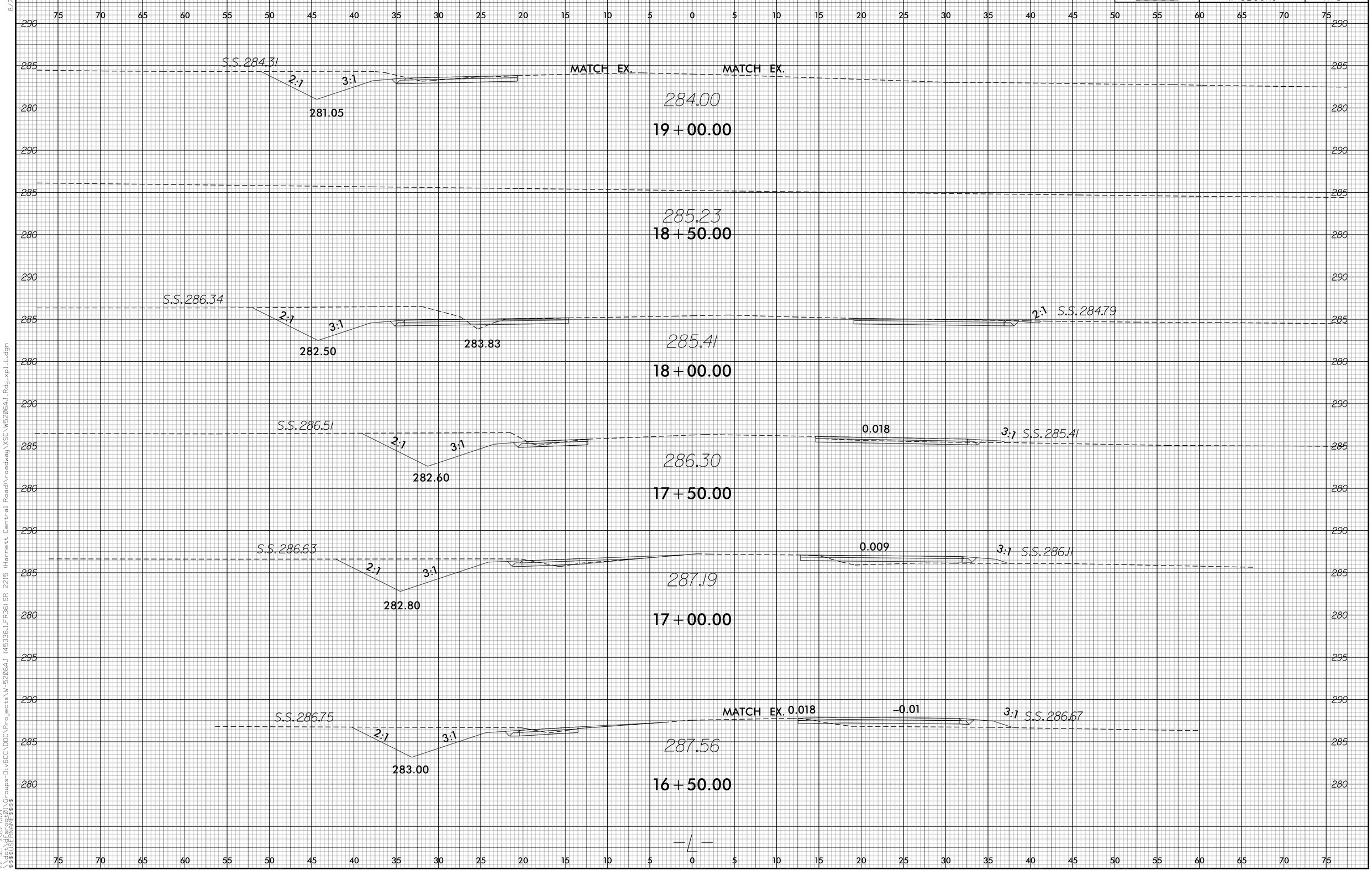

8/23/99

22-SEP-2015 10:21
$$$USER NAME$$$
C:\W5206AJ_Rdg_xpl_L.dgn

0 2.5 5	PROJ. REFERENCE NO.	SHEET NO.
	W-5206AJ	X-4

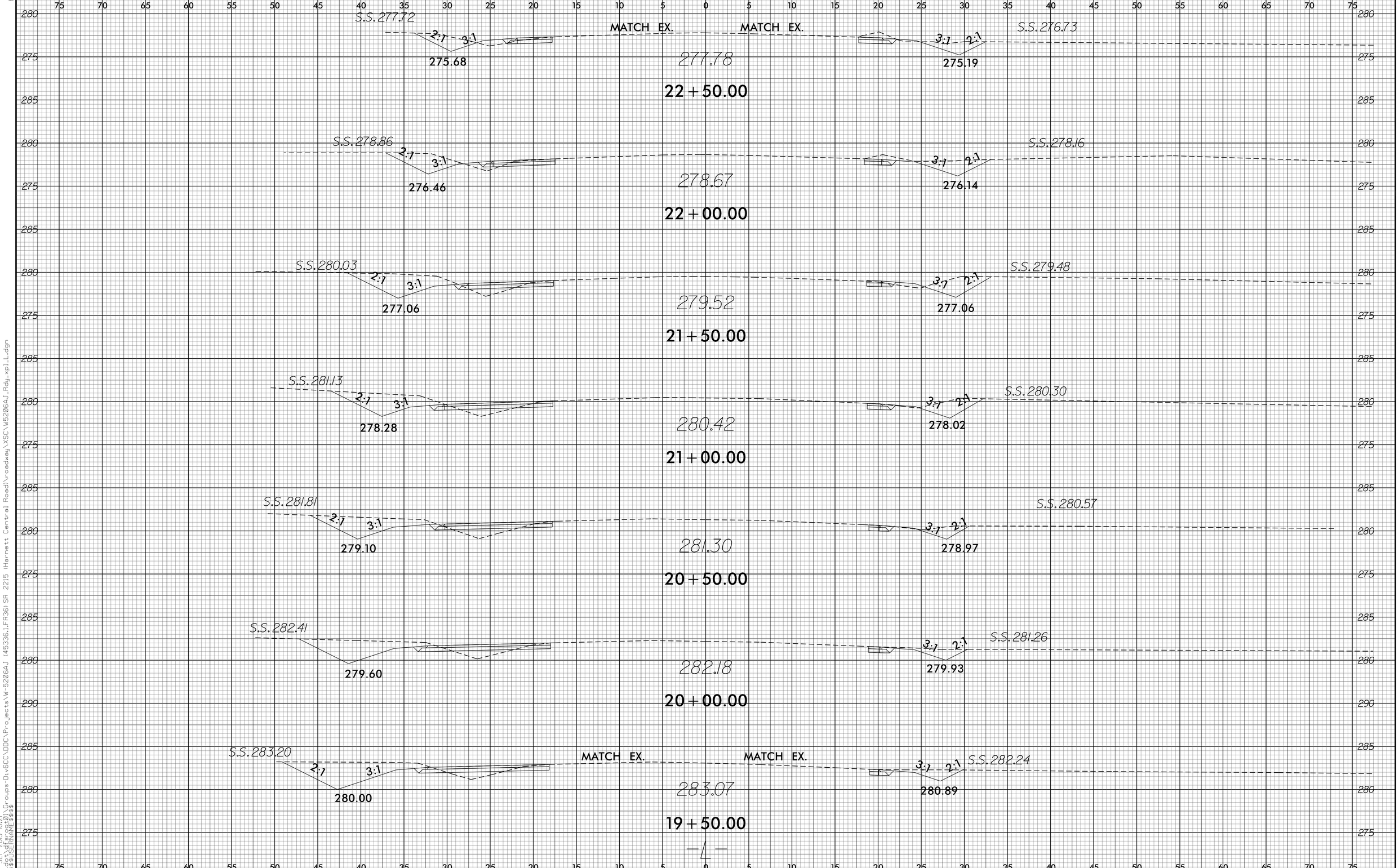

8/23/99
22-SEP-2015 10:21
$$$$USERNAME$$$$
\\Groups-Div6GC\DOC\Projects\W-5206AJ (45336.1.FR36) SR 2215 (Harnett Central Road)\roadway\XSC\W5206AJ_Rdg_xpl_L.dgn

0 2.5 5	PROJ. REFERENCE NO.	SHEET NO.
	W-5206AJ	X-5

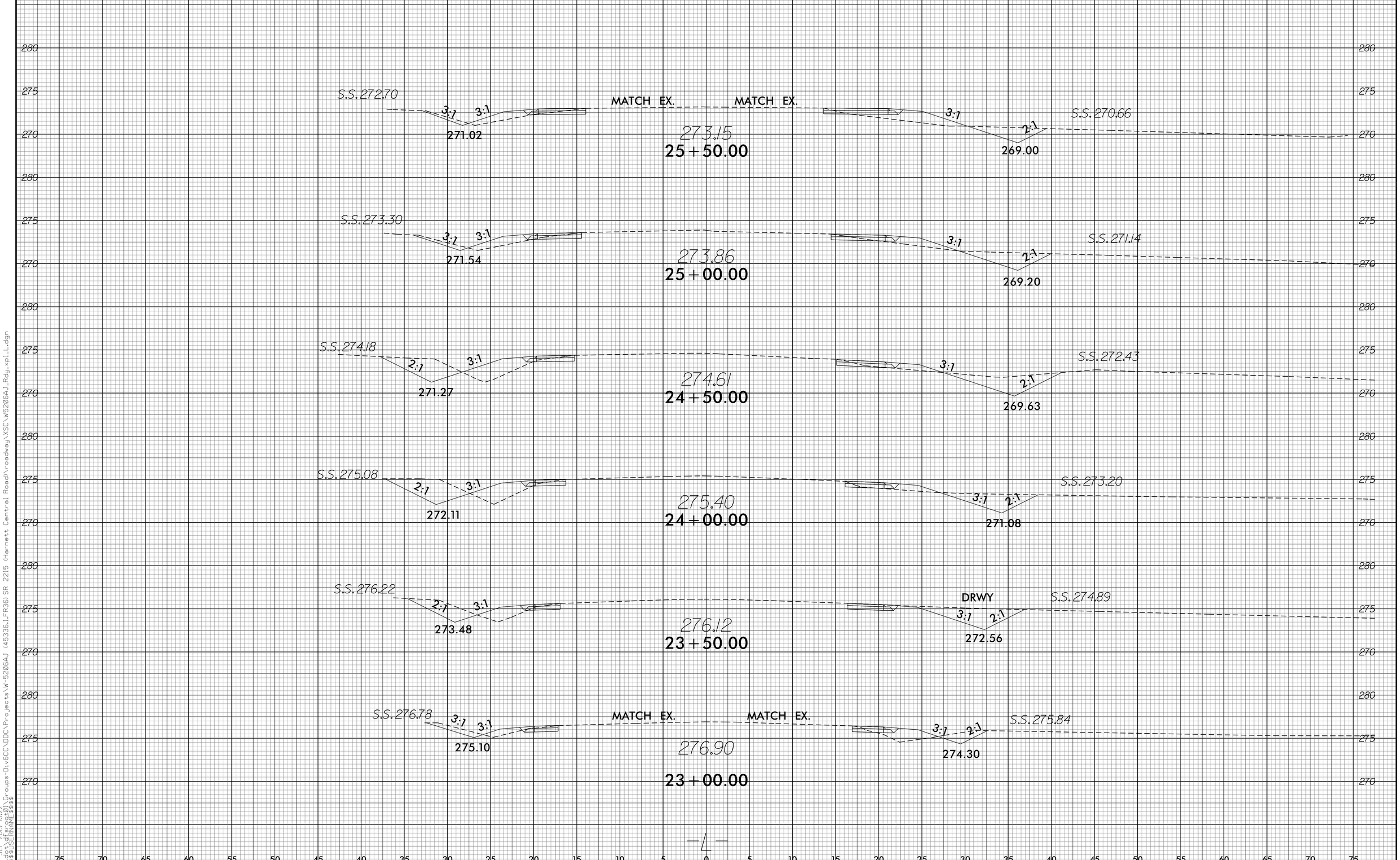

8/23/99
22-SEP-2015 10:22
$$$$USERNAME$$$$
\\Groups-Div6GC\DOC\Projects\W-5206AJ (45336.1.FR36) SR 2215 (Harnett Central Road)\roadway\XSC\W5206AJ_Rdg_xpl_L.dgn

0 2.5 5	PROJ. REFERENCE NO.	SHEET NO.
	W-5206AJ	X-6

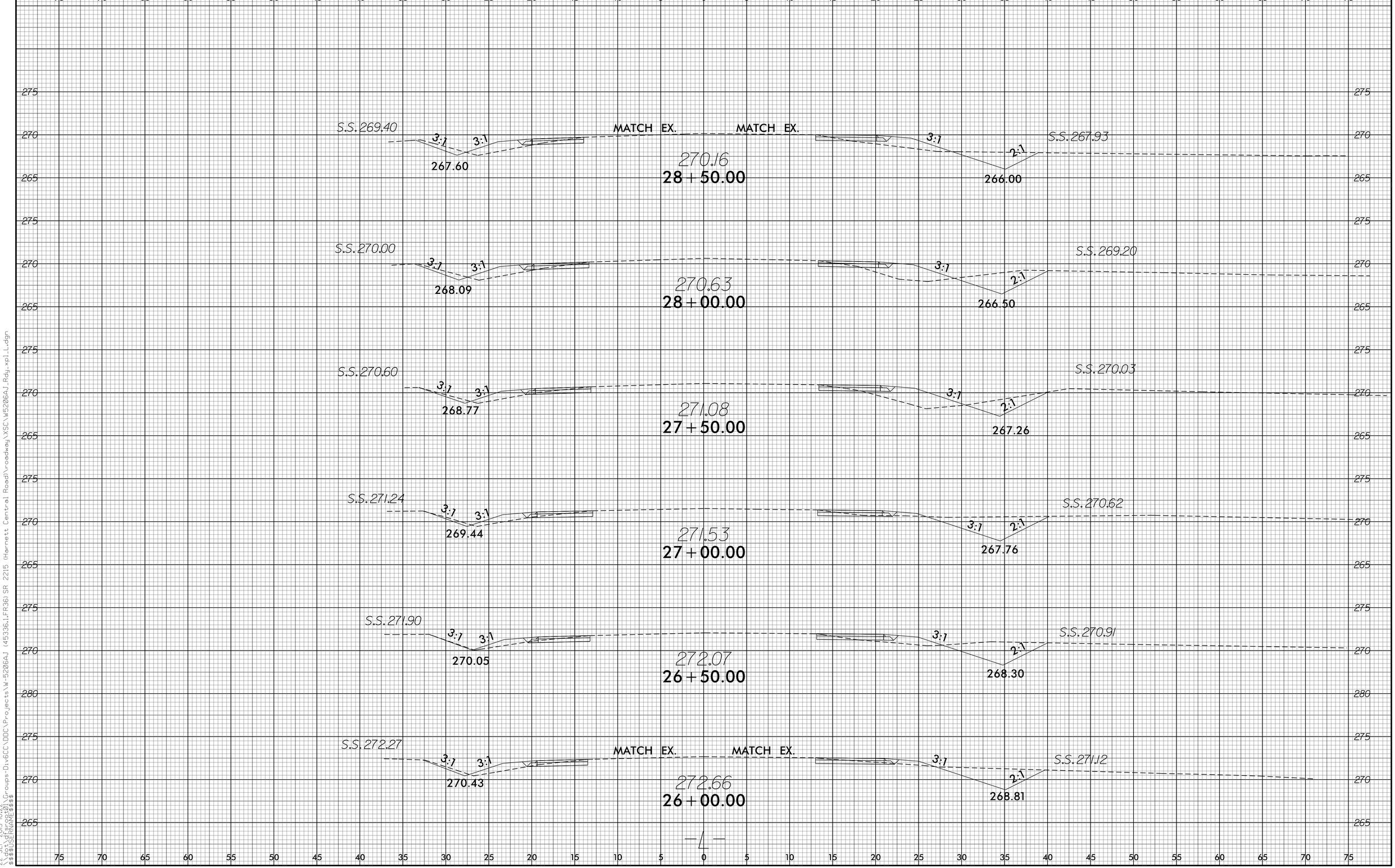

8/23/99

22-SEP-2015 10:22
X:\DGNs\Groups-Div6CC\DDC\Projects\W-5206AJ (45336.1.FR36) SR 2215 (Harnet Central Road)\roadway\XSC\W5206AJ_Rdg_xpl_L.dgn
$$$$USERNAME$$$$

0 2.5 5	PROJ. REFERENCE NO.	SHEET NO.
	W-5206AJ	X-7

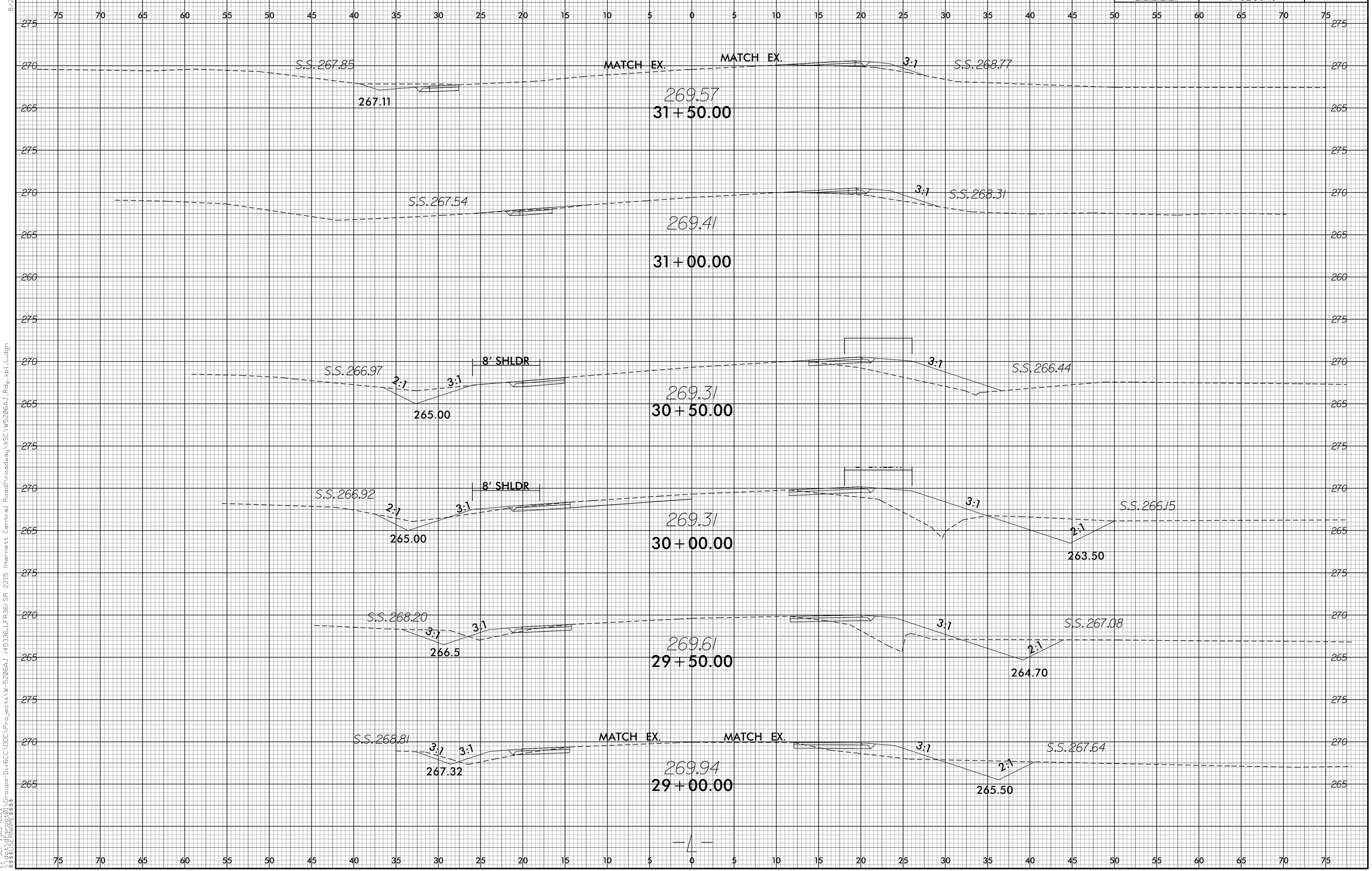

8/23/99
22-SEP-2015 10:22
$$$$USERNAME$$$$
\\Groups-Div6GC\DOC\Projects\W-5206AJ (45336.1.FR36) SR 2215 (Harnett Central Road)\roadway\XSC\W5206AJ_Rdg_xpl_L.dgn

0 2.5 5	PROJ. REFERENCE NO.	SHEET NO.
	W-5206AJ	X-8

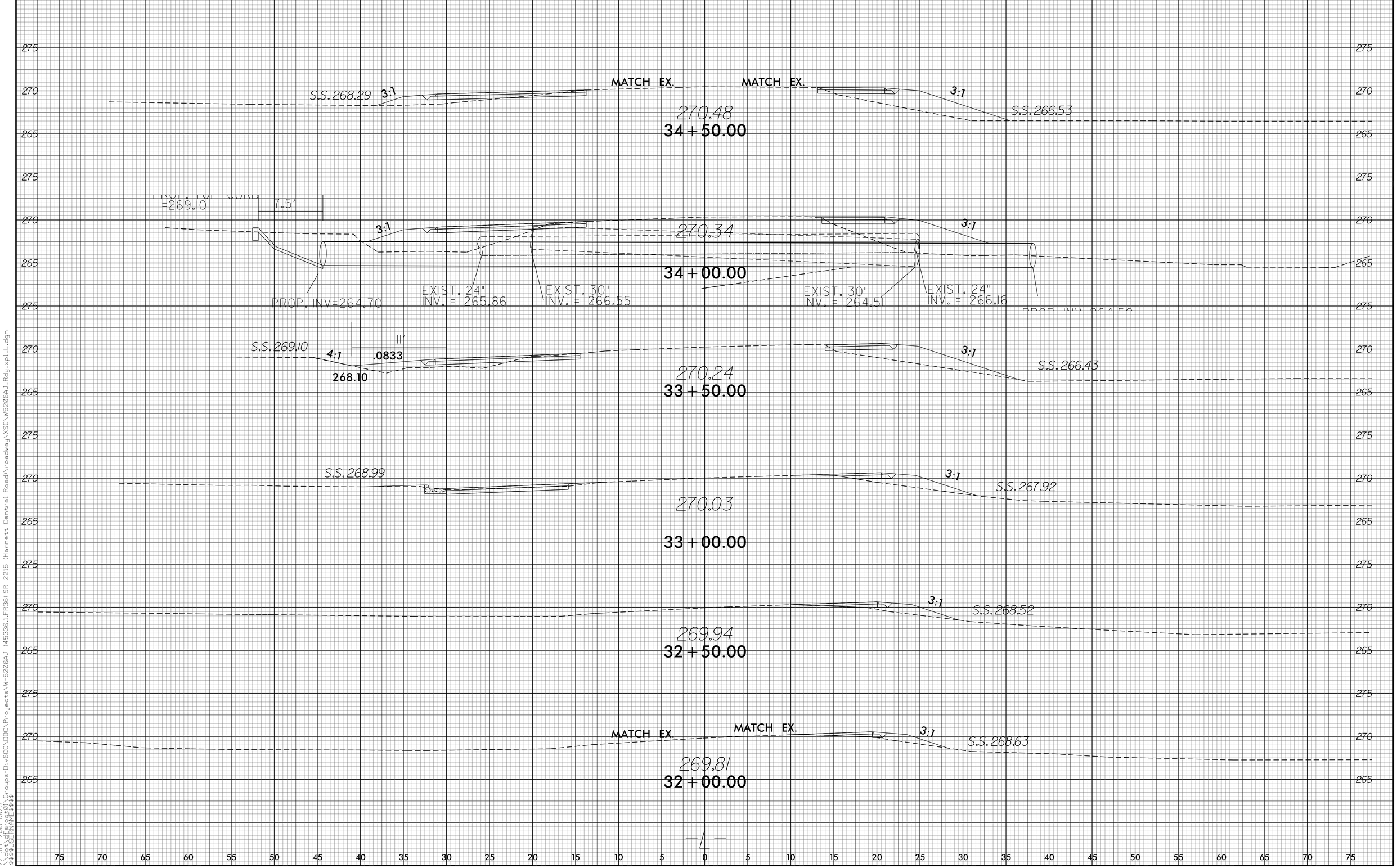

8/23/99
22-SEP-2015 10:23
$$$USER$$$
FILE NAME=$$$
$$$$USERNAME$$$$
C:\Groups-Div6CC\DDC\Projects\W-5206AJ (45336.1.FR36) SR 2215 (Harnett Central Road)\roadway\XSC\W5206AJ_Rdg_xpl_L.dgn

0 2.5 5	PROJ. REFERENCE NO.	SHEET NO.
	W-5206AJ	X-9

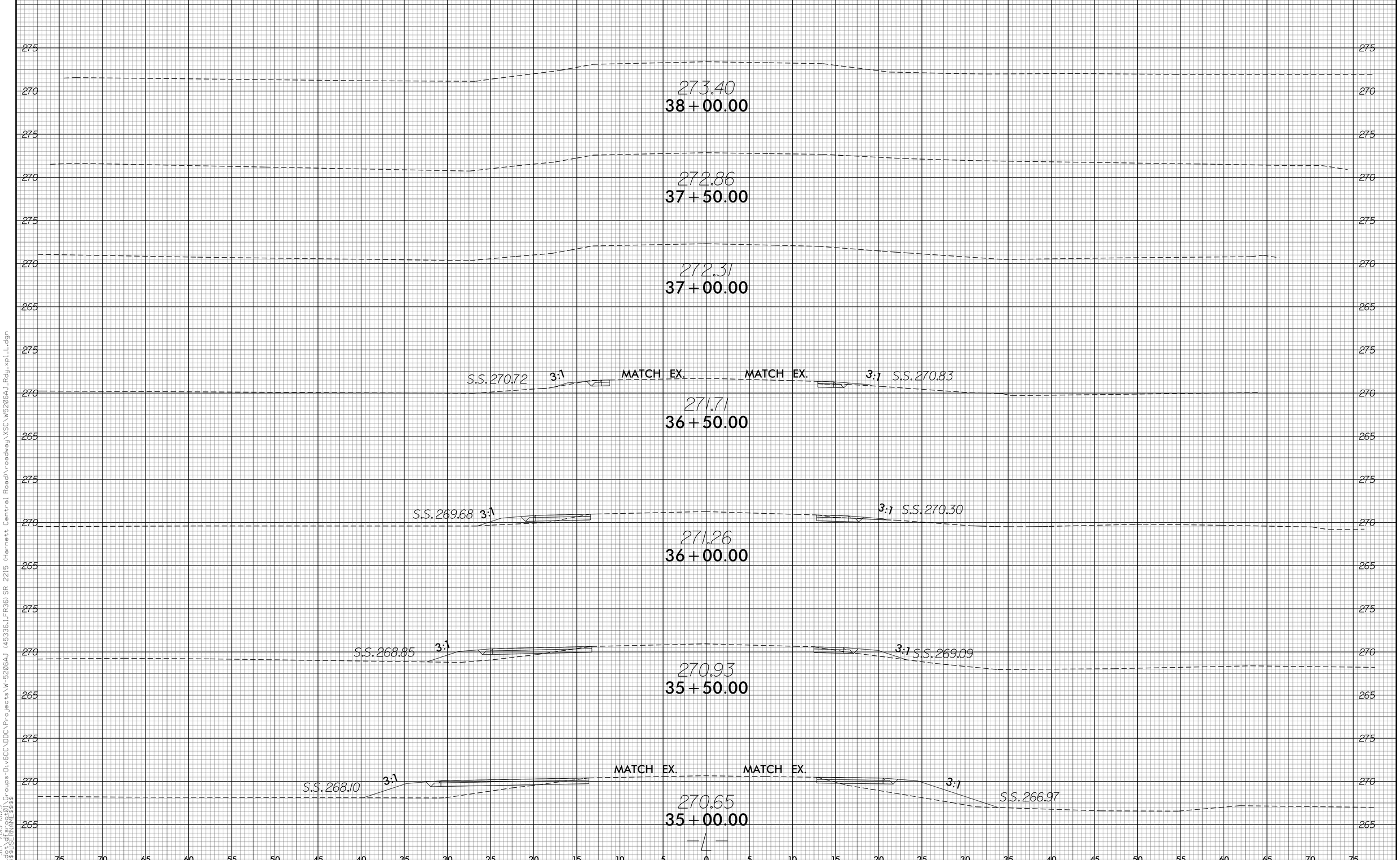

8/23/99
22-SEP-2015 10:23
$$$$USERNAME$$$$
...\Groups-Div6GC\DOC\Projects\W-5206AJ (45336.1.FR36) SR 2215 (Harnett Central Road)\roadway\XSC\W5206AJ_Rdy_xpl_L.dgn

0 2.5 5	PROJ. REFERENCE NO.	SHEET NO.
	W-5206AJ	X-10

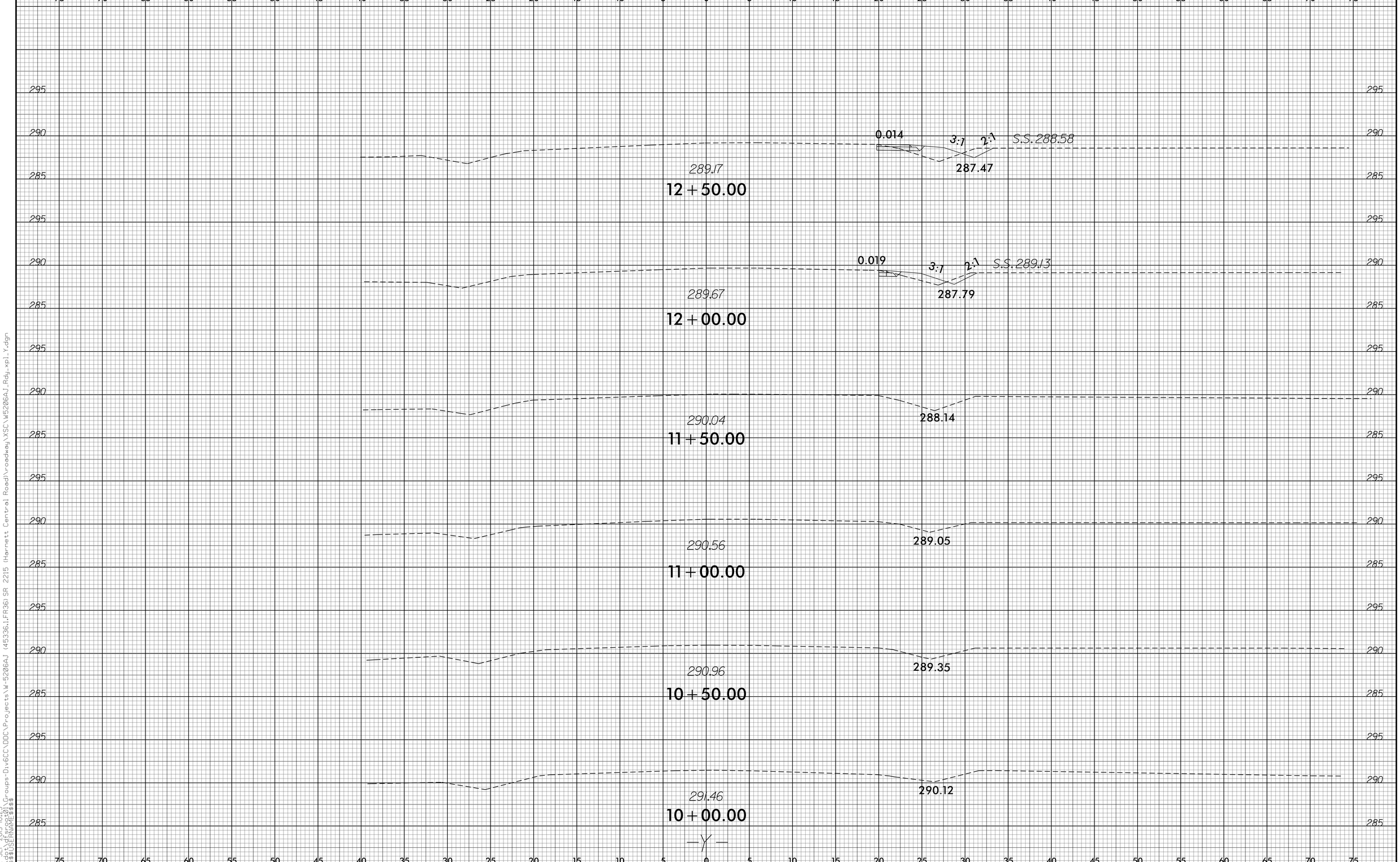

8/23/99

22-SEP-2015 10:23
$$$$USERNAME$$$$
\\Groups-Div6GC\DOC\Projects\W-5206AJ (45336.1.FR36) SR 2215 (Harnett Central Road)\roadway\XSC\W5206AJ_Rdy_xpl_Y.dgn

0 2.5 5	PROJ. REFERENCE NO.	SHEET NO.
	W-5206AJ	X-11

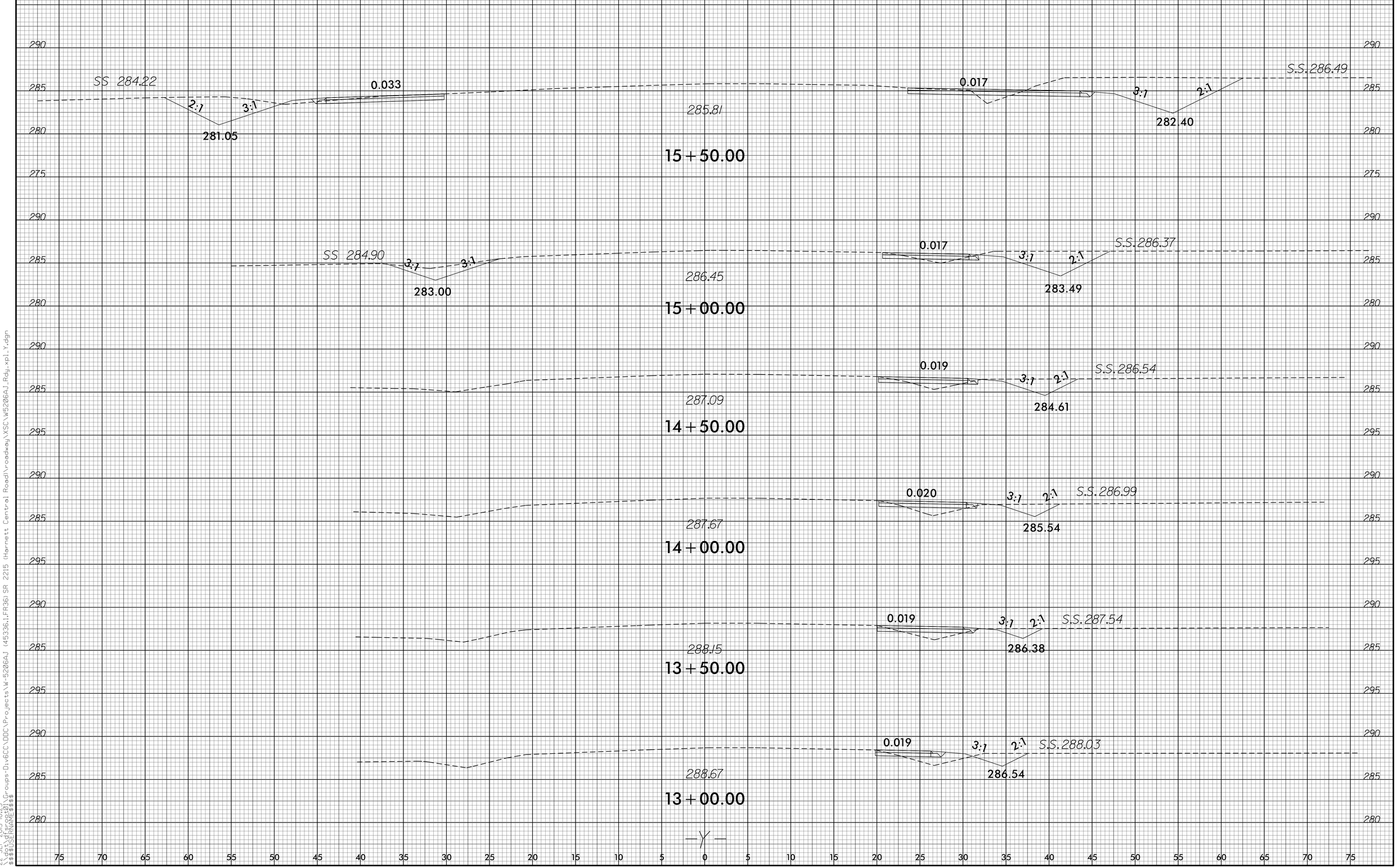

8/23/99

22-SEP-2015 10:23
X:\Projects\Groups-Div6CC\DDC\Projects\W-5206AJ (45336.1.FR36) SR 2215 (Harnett Central Road)\roadway\XSC\W5206AJ_Rdg_xpl_Y.dgn
$$$$USERNAME$$$$

8/23/99

22-SEP-2015 10:24
\\dot\dfsroot01\Groups\Div6CC\DDC\Projects\W-5206AJ (45336.1.FR36) SR 2215 (Harnett Central Road)\roadway\XSC\W5206AJ_Rdy_xpl_Y.dgn
$$$$USERNAME$$$$