**This electronic collection of documents is provided for the convenience of the user and is Not a Certified Document –**

**The documents contained herein were originally issued and sealed by the individuals whose names and license numbers appear on each page, on the dates appearing with their signature on that page.**
**This file or an individual page shall not be considered a certified document.**

DocuSign Envelope ID: EF23AB69-5A25-43B2-907F-BA4863F553C1

09/08/99

TIP PROJECT: 49218.1

CONTRACT: DF00444

See Sheet 1A For Index of Sheets
See Sheet 1B For Symbols Sheet

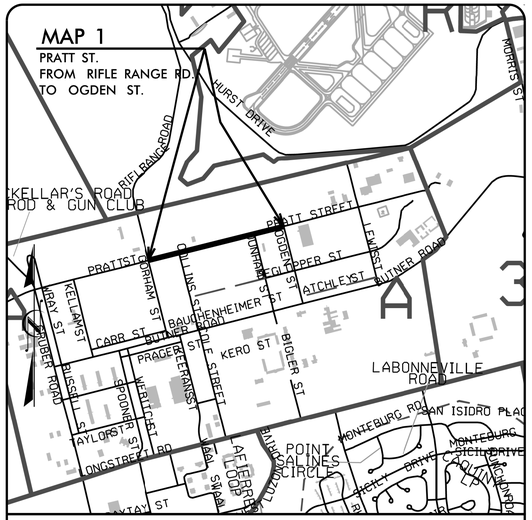


(NOT TO SCALE)

VICINITY MAP

STATE OF NORTH CAROLINA
DIVISION OF HIGHWAYS

# CUMBERLAND COUNTY

| STATE | STATE PROJECT REFERENCE NO. | SHEET NO. | TOTAL SHEETS |
|---|---|---|---|
| N.C. | 49218.1 | 1 | |

| STATE PROJ. NO. | F. A. PROJ. NO. | DESCRIPTION |
|---|---|---|
| 49218.1 | | PE |
| 49218.1 | | CONST. |

**FINAL PLANS**

**LOCATION:** PRATT STREET AT RIFLE RANGE ROAD/ GORHAM STREET TO OGDEN STREET.

**TYPE OF WORK:** RESURFACING, PAVEMENT REHABILITATION, MILLING GRADING, DRAINAGE IMPROVEMENTS, SIDEWALK, CURB AND GUTTER, ADA RAMP, AND PAVEMENT MARKINGS

NC GRID NAD 83 NA 2011

## MAP 1 – PRATT STREET

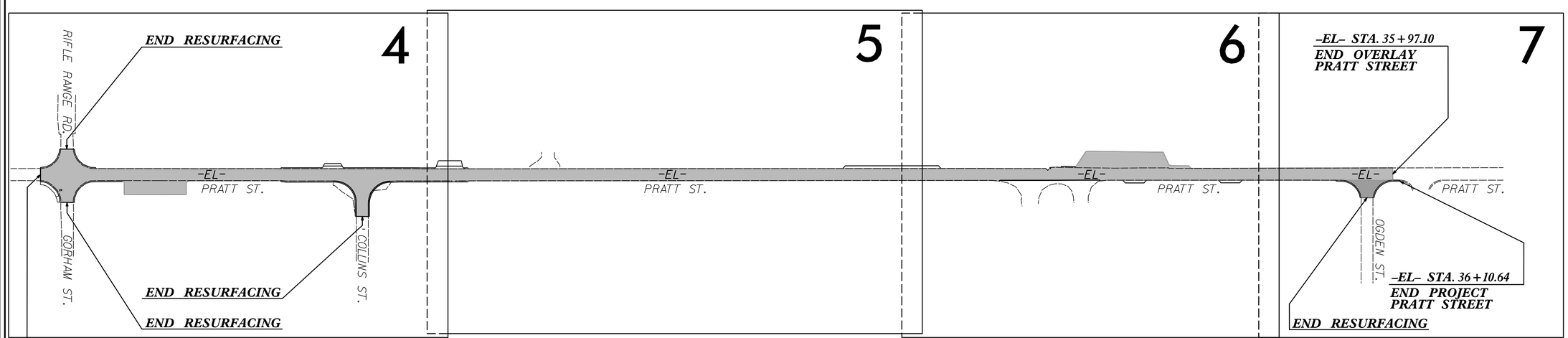


DOCUMENT NOT CONSIDERED FINAL UNLESS ALL SIGNATURES COMPLETED

**GRAPHIC SCALES**

30 15 0 30 60
PLANS

30 15 0 30 60
PROFILE (HORIZONTAL)

6 3 0 6 12
PROFILE (VERTICAL)

**PROJECT LENGTH**

| | | |
|---|---|---|
| MAP 1 PRATT STREET | = | 0.474 MILES |
| TOTAL LENGTH TIP PROJECT 49218.1 | = | 0.474 MILES |

WETHERILL ENGINEERING

*Prepared for Fort Bragg in the Office of:*
1223 JONES FRANKLIN ROAD
Raleigh, N.C. 27606
License No. F-0377
Bus: 919 851 8077
Fax: 919 851 8107

2018 NCDOT STANDARD SPECIFICATIONS

RIGHT OF WAY DATE: N/A

LETTING DATE: FEBRUARY 7, 2024

EDWARD G. WETHERILL, PE
PROJECT ENGINEER

R.K. MURPHY, JR., PE
PROJECT DESIGN ENGINEER

NCDOT CONTACT:

CHRISTY W. HUFF, PE
DIVISION PROJECT MANAGER

HYDRAULICS ENGINEER
12/13/2023
NORTH CAROLINA PROFESSIONAL SEAL 15833 ENGINEER JERRY L. LINDSEY
SIGNATURE: DocuSigned by: Jerry L. Lindsey P.E.
6A5171069294444A...

ROADWAY DESIGN ENGINEER
12/13/2023
NORTH CAROLINA PROFESSIONAL SEAL 018981 ENGINEER R. K. MURPHY, JR.
SIGNATURE: DocuSigned by: R.K. Murphy, Jr. P.E.
6870F3E84BAF42C...

STATE OF NORTH CAROLINA • DEPARTMENT OF TRANSPORTATION

12/13/2023
49218_Pratt_Rdy_TSH 01.dgn
USER:skennedy

DocuSign Envelope ID: BAA8D416-E682-4205-B576-574858D37567

8/17/99

| PROJECT REFERENCE NO. | SHEET NO. |
|---|---|
| 49218.1 | 1A |

**DOCUMENT NOT CONSIDERED FINAL UNLESS ALL SIGNATURES COMPLETED**

8/15/2023

NORTH CAROLINA PROFESSIONAL SEAL 018981 ENGINEER R. K. MURPHY, JR.

DocuSigned by: R. K. Murphy, Jr.
6870F3E849AF42C...

# GENERAL NOTES

GENERAL NOTES:

2024 SPECIFICATIONS
EFFECTIVE: 01-16-2024
REVISED:

GRADING AND SURFACING OR RESURFACING AND WIDENING:

THE GRADE LINES SHOWN DENOTE THE FINISHED ELEVATION OF THE PROPOSED SURFACING AT GRADE POINTS SHOWN ON THE TYPICAL SECTIONS. WHERE NO GRADE LINES ARE SHOWN, THE PROFILES SHOWN DENOTE THE TOP ELEVATION OF THE EXISTING PAVEMENT ALONG THE CENTER LINE OF SURVEY ON WHICH THE PROPOSED RESURFACING WILL BE PLACED. GRADE LINES MAY BE ADJUSTED BY THE ENGINEER IN ORDER TO SECURE A PROPER TIE-IN.

CLEARING:

CLEARING ON THIS PROJECT SHALL BE PERFORMED TO THE LIMITS ESTABLISHED BY METHOD II.

SUPERELEVATION:

ALL CURVES ON THIS PROJECT SHALL BE SUPERELEVATED IN ACCORDANCE WITH STD. NO. 225.04 USING THE RATE OF SUPERELEVATION AND RUNOFF SHOWN ON THE PLANS. SUPERELEVATION IS TO BE REVOLVED ABOUT THE GRADE POINTS SHOWN ON THE TYPICAL SECTIONS.

SHOULDER CONSTRUCTION:

ASPHALT, EARTH, AND CONCRETE SHOULDER CONSTRUCTION ON THE HIGH SIDE OF SUPERELEVATED CURVES SHALL BE IN ACCORDANCE WITH STD. NO. 560.01

SIDE ROADS:

THE CONTRACTOR WILL BE REQUIRED TO DO ALL NECESSARY WORK TO PROVIDE SUITABLE CONNECTIONS WITH ALL ROADS, STREETS, AND DRIVES ENTERING THIS PROJECT. THIS WORK WILL BE PAID FOR AT THE CONTRACT UNIT PRICE FOR THE PARTICULAR ITEMS INVOLVED.

DRIVEWAYS:

DRIVEWAYS SHALL BE CONSTRUCTED IN ACCORDANCE WITH STD. 848.02 USING 3 FOOT RADII OR RADII AS SHOWN ON THE PLANS. LOCATIONS OF DRIVES WILL BE AS SHOWN ON THE PLANS OR AS DIRECTED BY THE ENGINEER.

TEMPORARY SHORING:

SHORING REQUIRED FOR THE MAINTENANCE OF TRAFFIC WILL BE PAID FOR AS "EXTRA WORK" IN ACCORDANCE WITH SECTION 104-7.

UTILITIES:

UTILITY OWNERS ON THIS PROJECT ARE COMMUNICATIONS - NEC,

GAS - PNG, POWER - SANDHILLS, WATER - ASUS

ANY RELOCATION OF EXISTING UTILITIES WILL BE ACCOMPLISHED BY OTHERS.

CURB RAMPS

CURB RAMPS ARE SHOWN ON THE PLANS AT APPROXIMATE LOCATIONS. CONSTRUCT ALL CURB RAMPS ACCORDANCE WITH STD 848.06.

# 2018 ROADWAY ENGLISH STANDARD DRAWINGS

EFF. 01-16-2018
REV.

The following Roadway Standards as appear in "Roadway Standard Drawings" Highway Design Branch - N. C. Department of Transportation - Raleigh, N. C., Dated January, 2018 are applicable to this project and by reference hereby are considered a part of these plans:

| STD.NO. | TITLE |
|---|---|
| DIVISION 2 - EARTHWORK | |
| 200.02 | Method of Clearing - Method II |
| 225.02 | Guide for Grading Subgrade - Secondary and Local |
| 225.04 | Method of Obtaining Superelevation - Two Lane Pavement |
| 225.06 | Method of Grading Sight Distance at Intersections |
| DIVISION 3 - PIPE CULVERTS | |
| 300.01 | Method of Pipe Installation |
| DIVISION 5 - SUBGRADE, BASES AND SHOULDERS | |
| 560.01 | Method of Shoulder Construction - High Side of Superelevated Curve - Method I |
| DIVISION 6 - ASPHALT BASES AND PAVEMENTS | |
| 654.01 | Pavement Repairs |
| DIVISION 8 - INCIDENTALS | |
| 838.01 | Concrete Endwall for Single and Double Pipe Culverts - 15" thru 48" Pipe 90 Skew |
| 840.00 | Concrete Base Pad for Drainage Structures |
| 840.02 | Concrete Catch Basin - 12" thru 54" Pipe |
| 840.03 | Frame, Grates and Hood - for Use on Standard Catch Basin |
| 840.14 | Concrete Drop Inlet - 12" thru 30" Pipe |
| 840.18 | Concrete Grated Drop Inlet Type 'B' - 12" thru 36" Pipe |
| 840.29 | Frames and Narrow Slot Flat Grates |
| 840.31 | Concrete Junction Box - 12" thru 66" Pipe |
| 840.34 | Traffic Bearing Junction Box - for Use with Pipes 42" and Under |
| 840.45 | Precast Drainage Structure |
| 840.54 | Manhole Frame and Cover |
| 840.66 | Drainage Structure Steps |
| 846.01 | Concrete Curb, Gutter and Curb & Gutter |
| 848.01 | Concrete Sidewalk |
| 848.02 | Driveway Turnout - Radius Type |
| 848.04 | Street Turnout |
| 848.05 | Curb Ramp - Proposed Curb & Gutter |
| 850.01 | Concrete Paved Ditches |
| 876.01 | Rip Rap in Channels |
| 876.02 | Guide for Rip Rap at Pipe Outlets |

# INDEX OF SHEETS


| SHEET NO. | DESCRIPTION |
|---|---|
| 1 | TITLE SHEET |
| 1A | INDEX OF SHEETS, GENERAL NOTES, AND STANDARD DRAWINGS |
| 1B | SYMBOLOGY SHEET |
| 2A-1 THRU 2A-2 | PAVEMENT SCHEDULE AND TYPICAL SECTIONS |
| 2C-1 THRU 2C-3 | ROADWAY SPECIAL DETAILS |
| 3B-1 THRU 3B-2 | SUMMARY OF QUANTITIES |
| 3D-1 THRU 3D-2 | DRAINAGE SUMMARY SHEETS |
| 4 THRU 8 | PLAN AND PROFILE SHEETS |
| 9 | PIPE PROFILE |
| TMP-01 THRU TMP-04 | TRAFFIC MANAGEMENT PLANS |
| PMP-01 THRU PMP-02 | PAVEMENT MARKING PLANS |
| EC-1 THRU EC-11 | EROSION CONTROL PLANS |
| UO-1 THRU UO-2 | UTILITY BY OTHERS PLANS |
| X-1 THRU X-4 | PRATT ST. CROSS SECTIONS |
| S-1 THRU S-7 | STRUCTURE PLANS AND STANDARD NOTES |


**49218.1**

**FORT LIBERTY RESURFACING**

8/15/2023
49218.1_Pratt_Rdy_PSH-1A.dgn
jgrissom(jgrissom)

9/10/2021

| PROJECT REFERENCE NO. | SHEET NO. |
|---|---|
| 49218.1 | 1B |

STATE OF NORTH CAROLINA, DIVISION OF HIGHWAYS

# CONVENTIONAL PLAN SHEET SYMBOLS

***Note: Not to Scale***

## *BOUNDARIES AND PROPERTY:*

- State Line
- County Line
- Township Line
- City Line
- Reservation Line
- Property Line
- Existing Iron Pin (EIP)
- Computed Property Corner
- Existing Concrete Monument (ECM)
- Parcel/Sequence Number
- Existing Fence Line
- Proposed Woven Wire Fence
- Proposed Chain Link Fence
- Proposed Barbed Wire Fence
- Existing Wetland Boundary
- Proposed Wetland Boundary
- Existing Endangered Animal Boundary
- Existing Endangered Plant Boundary
- Existing Historic Property Boundary
- Known Contamination Area: Soil
- Potential Contamination Area: Soil
- Known Contamination Area: Water
- Potential Contamination Area: Water
- Contaminated Site: Known or Potential

## *BUILDINGS AND OTHER CULTURE:*

- Gas Pump Vent or U/G Tank Cap
- Sign
- Well
- Small Mine
- Foundation
- Area Outline
- Cemetery
- Building
- School
- Church
- Dam

## *HYDROLOGY:*

- Stream or Body of Water
- Hydro, Pool or Reservoir
- Jurisdictional Stream
- Buffer Zone 1
- Buffer Zone 2
- Flow Arrow
- Disappearing Stream
- Spring
- Wetland
- Proposed Lateral, Tail, Head Ditch
- False Sump

## *RAILROADS:*

- Standard Gauge
- RR Signal Milepost
- Switch
- RR Abandoned
- RR Dismantled

## *RIGHT OF WAY & PROJECT CONTROL:*

- Primary Horiz Control Point
- Primary Horiz and Vert Control Point
- Secondary Horiz and Vert Control Point
- Vertical Benchmark
- Existing Right of Way Monument
- Proposed Right of Way Monument (Rebar and Cap)
- Proposed Right of Way Monument (Concrete)
- Existing Permanent Easement Monument
- Proposed Permanent Easement Monument (Rebar and Cap)
- Existing C/A Monument
- Proposed C/A Monument (Rebar and Cap)
- Proposed C/A Monument (Concrete)
- Existing Right of Way Line
- Proposed Right of Way Line
- Existing Control of Access Line
- Proposed Control of Access Line
- Proposed ROW and CA Line
- Existing Easement Line
- Proposed Temporary Construction Easement
- Proposed Temporary Drainage Easement
- Proposed Permanent Drainage Easement
- Proposed Permanent Drainage/Utility Easement
- Proposed Permanent Utility Easement
- Proposed Temporary Utility Easement
- Proposed Aerial Utility Easement

## *ROADS AND RELATED FEATURES:*

- Existing Edge of Pavement
- Existing Curb
- Proposed Slope Stakes Cut
- Proposed Slope Stakes Fill
- Proposed Curb Ramp
- Existing Metal Guardrail
- Proposed Guardrail
- Existing Cable Guiderail
- Proposed Cable Guiderail
- Equality Symbol
- Pavement Removal

## *VEGETATION:*

- Single Tree
- Single Shrub
- Hedge
- Woods Line
- Orchard
- Vineyard

## *EXISTING STRUCTURES:*

MAJOR:

- Bridge, Tunnel or Box Culvert
- Bridge Wing Wall, Head Wall and End Wall

MINOR:

- Head and End Wall
- Pipe Culvert
- Footbridge
- Drainage Box: Catch Basin, DI or JB
- Paved Ditch Gutter
- Storm Sewer Manhole
- Storm Sewer

## *UTILITIES:*

** SUE – Subsurface Utility Engineering*
*LOS – Level of Service – A,B,C or D (Accuracy)*

POWER:

- Existing Power Pole
- Proposed Power Pole
- Existing Joint Use Pole
- Proposed Joint Use Pole
- Power Manhole
- Power Line Tower
- Power Transformer
- U/G Power Cable Hand Hole
- H–Frame Pole
- U/G Power Line Test Hole (SUE – LOS A)*
- U/G Power Line (SUE – LOS B)*
- U/G Power Line (SUE – LOS C)*
- U/G Power Line (SUE – LOS D)*

TELEPHONE:

- Existing Telephone Pole
- Proposed Telephone Pole
- Telephone Manhole
- Telephone Pedestal
- Telephone Cell Tower
- U/G Telephone Cable Hand Hole
- U/G Telephone Test Hole (SUE – LOS A)*
- U/G Telephone Cable (SUE – LOS B)*
- U/G Telephone Cable (SUE – LOS C)*
- U/G Telephone Cable (SUE – LOS D)*
- U/G Telephone Conduit (SUE – LOS B)*
- U/G Telephone Conduit (SUE – LOS C)*
- U/G Telephone Conduit (SUE – LOS D)*
- U/G Fiber Optics Cable (SUE – LOS B)*
- U/G Fiber Optics Cable (SUE – LOS C)*
- U/G Fiber Optics Cable (SUE – LOS D)*

WATER:

- Water Manhole
- Water Meter
- Water Valve
- Water Hydrant
- U/G Water Line Test Hole (SUE – LOS A)*
- U/G Water Line (SUE – LOS B)*
- U/G Water Line (SUE – LOS C)*
- U/G Water Line (SUE – LOS D)*
- Above Ground Water Line

TV:

- TV Pedestal
- TV Tower
- U/G TV Cable Hand Hole
- U/G TV Test Hole (SUE – LOS A)*
- U/G TV Cable (SUE – LOS B)*
- U/G TV Cable (SUE – LOS C)*
- U/G TV Cable (SUE – LOS D)*
- U/G Fiber Optic Cable (SUE – LOS B)*
- U/G Fiber Optic Cable (SUE – LOS C)*
- U/G Fiber Optic Cable (SUE – LOS D)*

GAS:

- Gas Valve
- Gas Meter
- U/G Gas Line Test Hole (SUE – LOS A)*
- U/G Gas Line (SUE – LOS B)*
- U/G Gas Line (SUE – LOS C)*
- U/G Gas Line (SUE – LOS D)*
- Above Ground Gas Line

SANITARY SEWER:

- Sanitary Sewer Manhole
- Sanitary Sewer Cleanout
- U/G Sanitary Sewer Line
- Above Ground Sanitary Sewer
- SS Force Main Line Test Hole (SUE – LOS A)*
- SS Force Main Line (SUE – LOS B)*
- SS Force Main Line (SUE – LOS C)*
- SS Force Main Line (SUE – LOS D)*

MISCELLANEOUS:

- Utility Pole
- Utility Pole with Base
- Utility Located Object
- Utility Traffic Signal Box
- Utility Unknown U/G Line (SUE – LOS B)*
- U/G Tank; Water, Gas, Oil
- Underground Storage Tank, Approx. Loc.
- A/G Tank; Water, Gas, Oil
- Geoenvironmental Boring
- Abandoned According to Utility Records — AATUR
- End of Information — E.O.I.

DocuSign Envelope ID: 157E0DE2-9F3E-4434-A2F3-520F3F4C16E8

8/17/99

REVISIONS

# PAVEMENT SCHEDULE

(FINAL PAVEMENT DESIGN)

| | |
|---|---|
| C1 | PROP. APPROX. 3″ ASPHALT CONCRETE SURFACE COURSE, TYPE S9.5C, AT AN AVERAGE RATE OF 168 LBS. PER SQ. YD. IN EACH OF TWO LAYERS. |
| C2 | PROP. APPROX. 2″ ASPHALT CONCRETE SURFACE COURSE, TYPE S9.5C, AT AN AVERAGE RATE OF 224 LBS. PER SQ. YD. |
| D1 | PROP. APPROX. 2.5″ ASPHALT CONCRETE INTERMEDIATE COURSE, TYPE I19.0C, AT AN AVERAGE RATE OF 285 LBS. PER SQ. YD. |
| D2 | PROP. APPROX. 4″ ASPHALT CONCRETE INTERMEDIATE COURSE, TYPE I19.0C, AT AN AVERAGE RATE OF 456 LBS. PER SQ. YD. |
| E1 | PROP. APPROX. 4″ ASPHALT CONCRETE BASE COURSE, TYPE B25.0C, AT AN AVERAGE RATE OF 456 LBS. PER SQ. YD. |
| J1 | 6″ AGGREGATE BASE COURSE |
| R1 | 2′-6″ CURB & GUTTER |
| S1 | 4″ CONCRETE SIDEWALK |
| T | EARTH MATERIAL |
| U | EXISTING PAVEMENT |
| V1 | MILL 9.5″ OF EXISTING ASPHALT PAVEMENT |
| V2 | MILL 11″ OF EXISTING ASPHALT PAVEMENT |

| PROJECT REFERENCE NO. | SHEET NO. |
|---|---|
| 49218.1 | 2A-1 |

PAVEMENT DESIGN ENGINEER 1/9/2024 — NORTH CAROLINA PROFESSIONAL SEAL 044590 ENGINEER ANDREW D. WARNP — DocuSigned by: Andrew D. Warnp

ROADWAY DESIGN ENGINEER 1/9/2024 — NORTH CAROLINA PROFESSIONAL SEAL 018981 ENGINEER T. K. MURPHY JR. — DocuSigned by: T. K. Murphy Jr.

DOCUMENT NOT CONSIDERED FINAL UNLESS ALL SIGNATURES COMPLETED

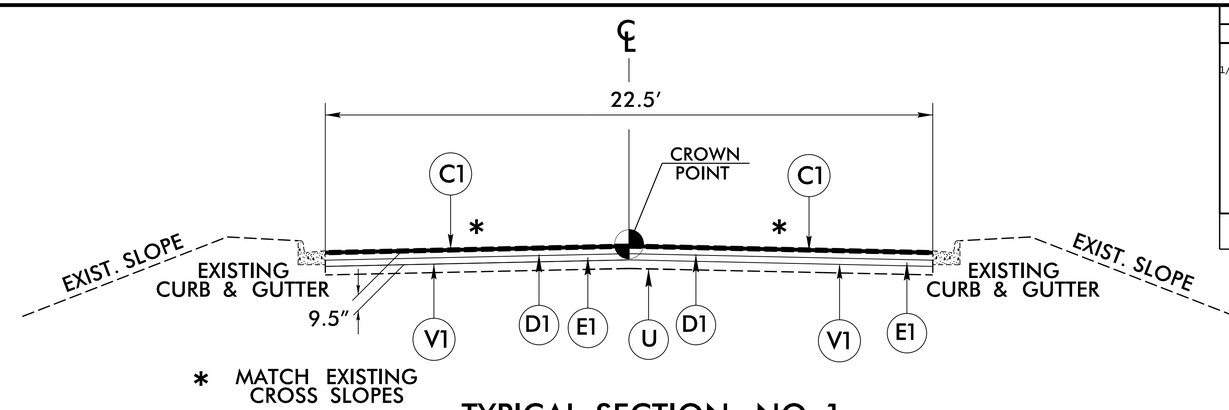


## TYPICAL SECTION NO. 1

MAP 1 – PRATT ST.

FROM –EL– STA. 12+59.54 TO –EL– STA. 15+51.00
FROM –EL– STA. 18+95.00 TO –EL– STA. 35+97.10

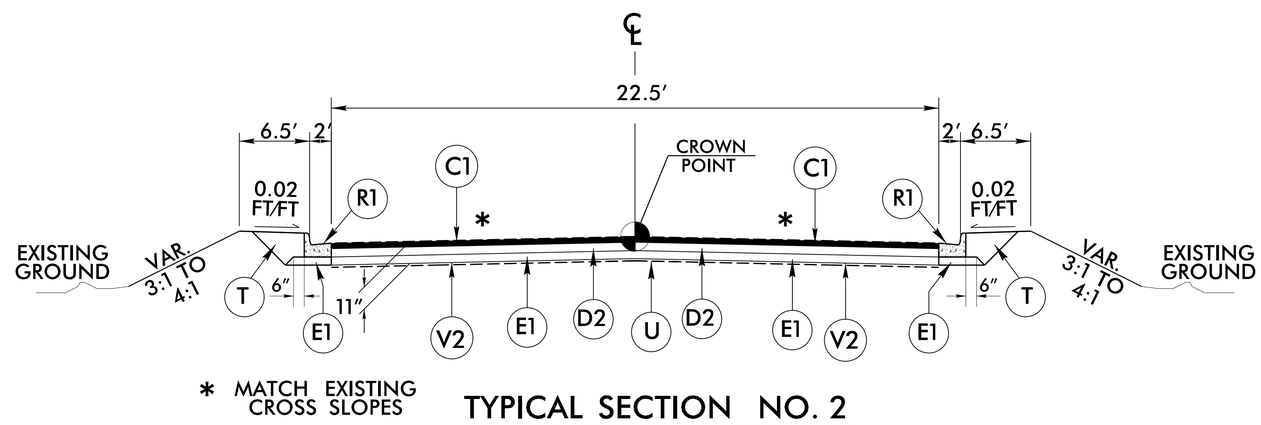


## TYPICAL SECTION NO. 2

MAP 1 – PRATT ST.

FROM –EL– STA. 11+08.28 TO –EL– STA. 12+59.54
FROM –EL– STA. 15+51.00 TO –EL– STA. 18+95.00
FROM –Y1– STA. 10+11.63 TO –Y1– STA. 10+76.81
FROM –EL– STA. 34+92.84 TO –EL– STA. 35+39.03 RT. (OGDEN ST.)
FROM –EL– STA. 35+60.81 TO –EL– STA. 36+10.64 RT. (OGDEN ST.)

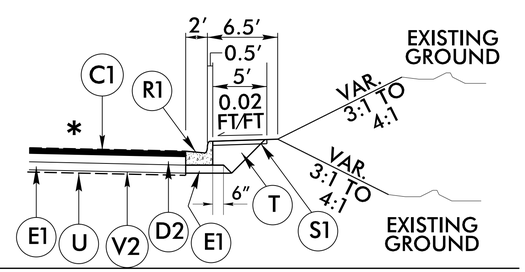


USE IN CONJUNCTION WITH TYPICAL SECTION NO. 2
MAP 1 – PRATT ST.
–EL– STA. 11+08.28 TO –EL– STA. 11+45.69 RT.

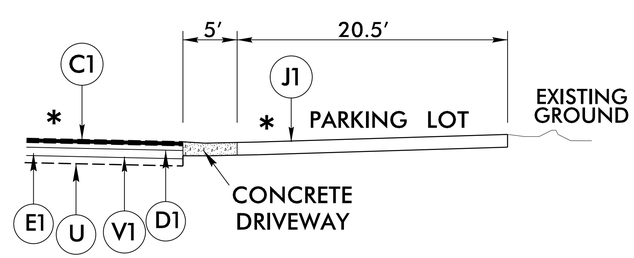


USE IN CONJUNCTION WITH TYPICAL SECTION NO. 1
MAP 1 – PRATT ST.
–EL– STA. 12+62.53 TO –EL– STA. 13+76.53 RT.

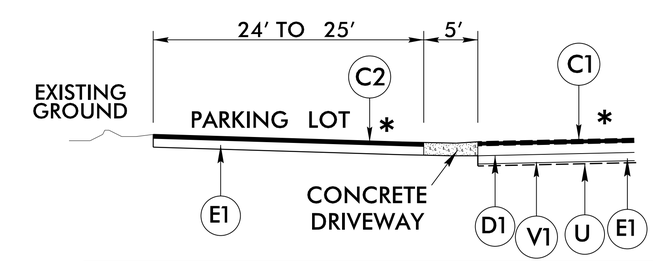


USE IN CONJUNCTION WITH TYPICAL SECTION NO. 1
MAP 1 – PRATT ST.
–EL– STA. 30+14.29 TO –EL– STA. 31+85.35 LT.

1/9/2024
49218.1_Rdy_typ rev 010424.dgn
USERRickenpell

DocuSign Envelope ID: F83E2178-BBD4-4139-8794-6A2E12BB226A

8/17/99

REVISIONS

| PROJECT REFERENCE NO. | SHEET NO. |
|---|---|
| 49218J | 2A-2 |

ROADWAY DESIGN ENGINEER

7/19/2023

NORTH CAROLINA PROFESSIONAL SEAL 018981 ENGINEER F. K. MURPHY

DocuSigned by:
F. K. Murphy
CEB7A0A4A1A4A1...

**DOCUMENT NOT CONSIDERED FINAL UNLESS ALL SIGNATURES COMPLETED**

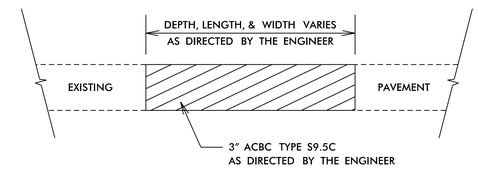


PATCHING EXISTING PAVEMENT

MILLING TO BE PERFORMED PRIOR TO PATCHING

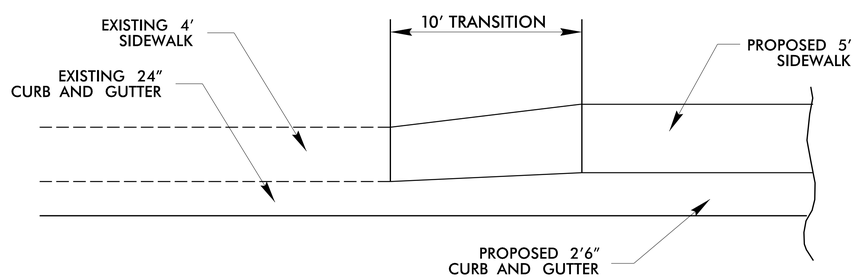


Detail Showing Curb and Gutter or Sidewalk Transition

NOTE: DRAWING NOT TO SCALE

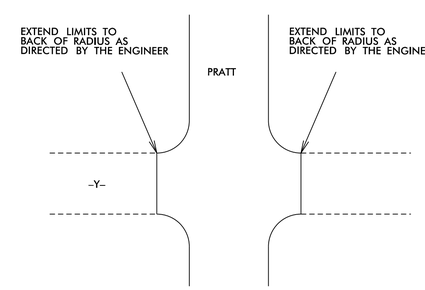


DETAIL OF PROJECT LIMITS AT
UNSIGNALIZED Y LINES

UNSIGNALIZED INTERSECTIONS

PRATT ST. AT RIFLE RANGE RD./GORHAM ST.

5/1/2023
1:42:08 PM
USER: KKNIFFIN
49218J Rdy psh2A-2_Typ.dgn

| PROJECT REFERENCE NO. | SHEET NO. |
|---|---|
| 49218.1 | 2C-2 |

STATE OF
NORTH CAROLINA
DEPT. OF TRANSPORTATION
DIVISION OF HIGHWAYS
RALEIGH, N.C.

ENGLISH DETAIL DRAWING FOR
# MODIFIED CONCRETE FLUME
WITH CONCRETE OR RIP-RAP DITCH

SHEET 1 OF 1

MODFLMDTCH

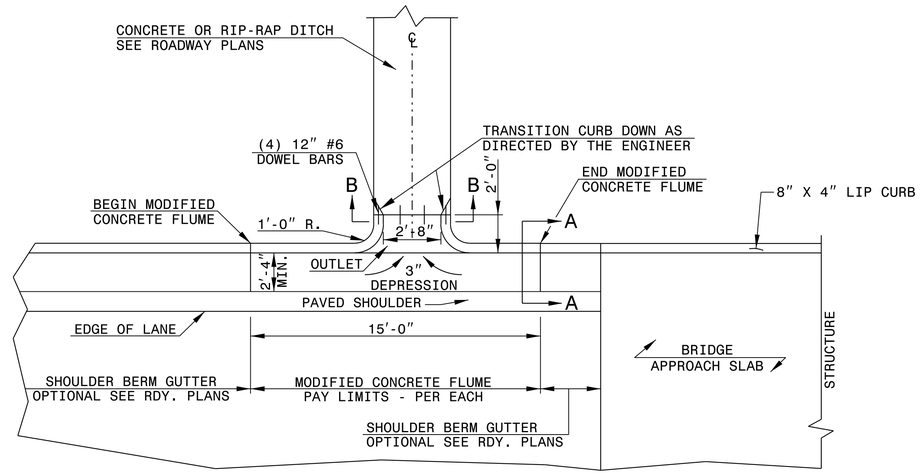


PLAN VIEW

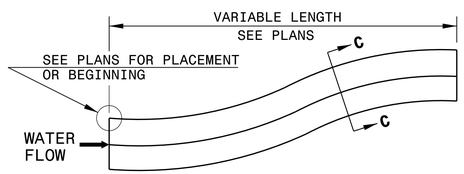


DOWNGRADE OR SAG

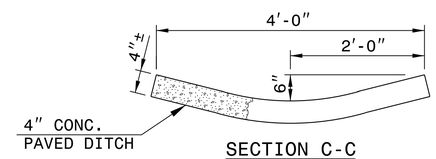


SECTION C-C

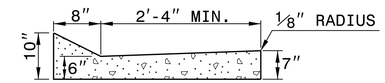


SECTION A-A

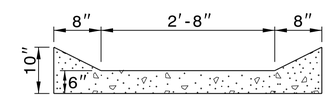


SECTION B-B

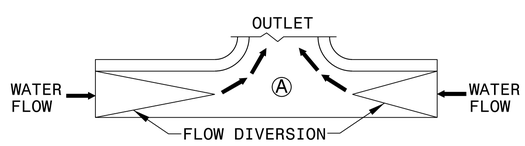


SAG

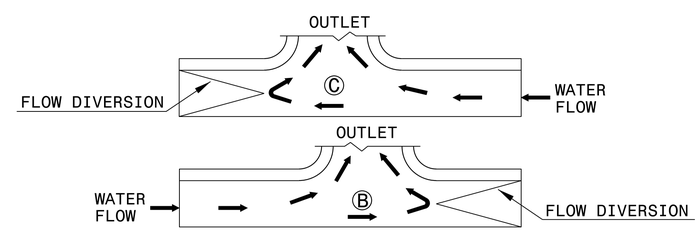


DOWN GRADE

FLOW DIVERSION EXAMPLES

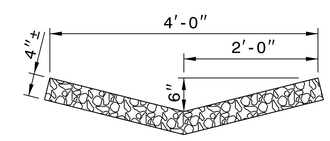


RIP-RAP LINED DITCH

NOTES:

- CONSTRUCT MODIFIED CONCRETE FLUME AND SHOULDER BERM GUTTER IN ACCORDANCE WITH THIS DETAIL.
- CONSTRUCT CONCRETE DITCH IN ACCORDANCE WITH STD. DWG. NO. 850.01.
- CONSTRUCT RIP RAP LINED DITCH IN ACCORDANCE WITH THIS DETAIL, IF CALLED FOR IN PLANS.
- CONCRETE OR RIP RAP LINED DITCH SHALL BE THE TYPE AND LENGTH SPECIFIED BY THE ROADWAY PLANS. THE DITCH SHALL TERMINATE AS SHOWN ON THE PLANS. IF NO TERMINATION IS INDICATED PLACE RIP-RAP AT THE END OF THE DITCH AS INDICATED BY STD. DWG. 876.02 FOR AN 18″ PIPE. TRANSITIONS FROM THE DITCH TO TERMINATION SHALL BE AS DIRECTED BY THE ENGINEER.
- MODIFICATIONS SHALL BE AS DICTATED BY SITE CONDITIONS AND DIRECTED BY THE ENGINEER.


STATE OF
NORTH CAROLINA
DEPT. OF TRANSPORTATION
DIVISION OF HIGHWAYS
RALEIGH, N.C.

ENGLISH DETAIL DRAWING FOR
MODIFIED CONCRETE FLUME
WITH CONCRETE OR RIP-RAP DITCH

SHEET 1 OF 1

MODFLMDTCH


DOCUMENT NOT CONSIDERED FINAL
UNLESS ALL SIGNATURES COMPLETED

NORTH CAROLINA PROFESSIONAL SEAL 33144 ENGINEER NICOLE M. HICKLER


CONTRACT STANDARDS
AND DEVELOPMENT UNIT
Office 919-707-6950 FAX 919-250-4119


SEE PLATE FOR TITLE

ORIGINAL BY: E.E. Ward DATE: Apr. 2002
MODIFIED BY: J.S. Howerton DATE: October 2017
CHECKED BY: DATE:
FILE SPEC.: w:details\stand\modifiedflume.dgn

18-OCT-2017 14:17
S:\Contracts\Contracts\Special Details\ericward\usr\details\stand\modifiedflume.dgn
jhowerton AT CSD-242595

5/14/99

STATE OF NORTH CAROLINA
DEPT. OF TRANSPORTATION
DIVISION OF HIGHWAYS
RALEIGH, N.C.

ENGLISH DETAIL DRAWING FOR
**MINIMUM DEPTH**
**CONCRETE CATCH BASIN**
12" THRU 84" PIPE

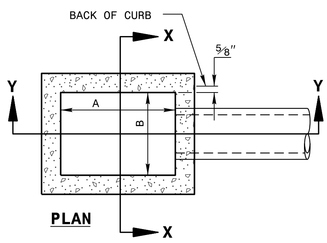


**PLAN**

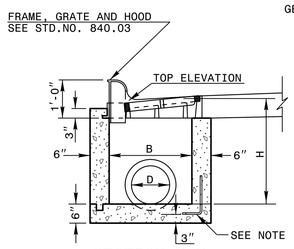


**SECTION X-X**

GENERAL NOTES:

USE CLASS "B" CONCRETE THROUGHOUT.

PROVIDE ALL CATCH BASINS OVER 3'-6" IN DEPTH WITH STEPS 12" ON CENTER. USE STEPS WHICH COMPLY WITH STD. DRAWING 840.66.

OPTIONAL CONSTRUCTION - MONOLITHIC POUR, 2" KEYWAY, OR #4 BAR DOWELS AT 12" CENTERS AS DIRECTED BY THE ENGINEER.

USE FORMS FOR THE CONSTRUCTION OF THE BOTTOM SLAB.

IF REINFORCED CONCRETE PIPE IS SET IN BOTTOM SLAB OF BOX, ADD TO SLAB AS SHOWN ON STD. NO. 840.00.

USE TYPE "E", "F" AND "G" GRATES UNLESS OTHERWISE INDICATED.

FOR 8'-0" IN HEIGHT OR LESS USE 6" WALLS AND BOTTOM SLAB. OVER 8'-0" TO 16'-0" IN HEIGHT USE 8" WALLS AND BOTTOM SLAB. ADJUST QUANTITIES ACCORDINGLY.

CONSTRUCT WITH PIPE CROWNS MATCHING.

CHAMFER ALL EXPOSED CORNERS 1".

** FOR STRUCTURES WITH PIPE LARGER THAN 54", MAKE THE TOP SLAB 8" THICK.

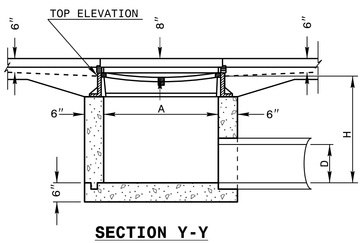


**SECTION Y-Y**

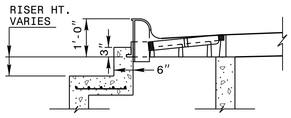


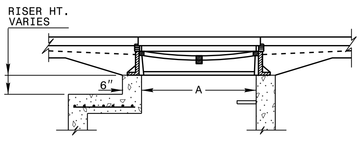


**DETAIL SHOWING METHOD OF RISER CONSTRUCTION**

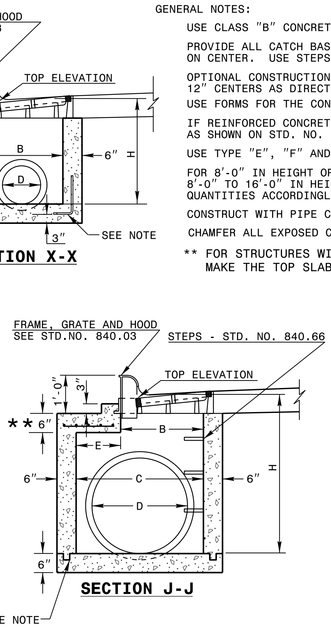


**SECTION J-J**

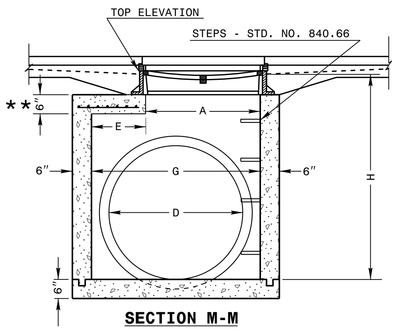


**SECTION M-M**

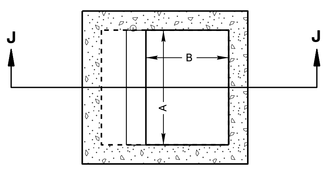


**PLAN**

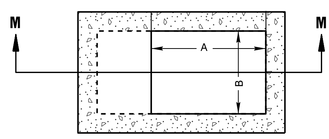


**PLAN**

SHEET 1 OF 2
**840D02**

STATE OF NORTH CAROLINA
DEPT. OF TRANSPORTATION
DIVISION OF HIGHWAYS
RALEIGH, N.C.

ENGLISH DETAIL DRAWING FOR
**MINIMUM DEPTH**
**CONCRETE CATCH BASIN**
12" THRU 84" PIPE

** FOR STRUCTURES WITH PIPE LARGER THAN 54", MAKE THE TOP SLAB 8" THICK.

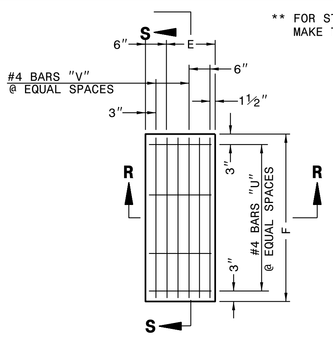


**PLAN OF TOP SLAB**

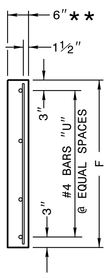


**SECTION S-S**

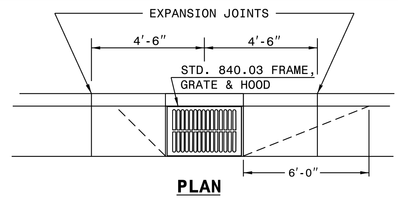


**PLAN**

CURB AND GUTTER WITH CATCH BASIN ON STEEP GRADES

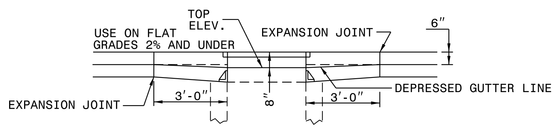


**ELEVATION**

NORMAL CURB AND GUTTER ON LIGHT GRADES

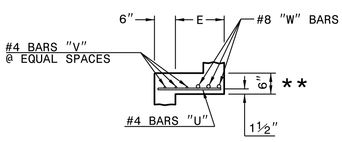


**SECTION R-R**

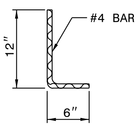


**DOWEL**

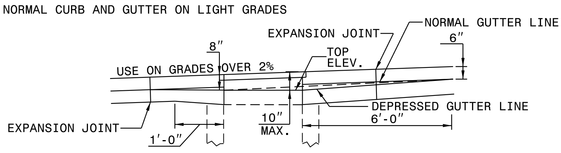


**ELEVATION**

NORMAL CURB AND GUTTER ON STEEP GRADES

* RISER HAS .228 CUBIC YARDS OF CONCRETE PER FOOT HEIGHT

**MINIMUM DIMENSIONS AND QUANTITIES FOR CONCRETE CATCH BASIN(BASED ON MIN. HEIGHT, H, WITH NO RISER) ***

| DIMENSIONS OF BOX AND PIPE | | | | | | COVER DIMENSION | | BARS-U | | BARS-V | | BARS-W | | | CU.YDS. CONC. IN BOX | | | DEDUCTIONS ONE PIPE | |
|---|---|---|---|---|---|---|---|---|---|---|---|---|---|---|---|---|---|---|---|
| PIPE | SPAN | WIDTH | WIDTH | SPAN | MIN. HEIGHT | | | | | | | | | | TOP SLAB | BOTTOM SLAB | TOT. CONC. FOR MINIMUM HEIGHT, H | | |
| D | A | B | C | G | H | E | F | NO. | LENGTH | NO. | LENGTH | NO. | LENGTH | TOTAL LBS. | | | | C.M. | R.C. |
| 12" | 3'-0" | 2'-2" | -- | -- | 2'-0" | -- | -- | -- | -- | -- | -- | -- | -- | -- | -- | 0.235 | 0.772 | 0.015 | 0.026 |
| 15" | 3'-0" | 2'-2" | | | 2'-3" | | | | | | | | | | | 0.235 | 0.829 | 0.023 | 0.036 |
| 18" | 3'-0" | 2'-2" | | | 2'-6" | | | | | | | | | | | 0.235 | 0.887 | 0.033 | 0.049 |
| 24" | 3'-0" | 2'-2" | | | 3'-1" | | | | | | | | | | | 0.235 | 1.001 | 0.059 | 0.085 |
| 30" | 3'-0" | 2'-2" | 3'-4" | 3'-4" | 3'-10" | 1'-2" | 4'-4" | 4 | 1'-5" | 2 | 4'-1" | 3 | 4'-1" | 39 | 0.123 | 0.347 | 1.433 | 0.092 | 0.127 |
| 36" | 3'-0" | 2'-2" | 3'-10" | 3'-10" | 4'-6" | 1'-8" | 4'-10" | 4 | 1'-11" | 3 | 4'-7" | 3 | 4'-7" | 43 | 0.161 | 0.432 | 1.714 | 0.132 | 0.178 |
| 42" | 3'-0" | 2'-2" | 4'-5" | 4'-5" | 4'-11" | 2'-2" | 5'-5" | 5 | 2'-5" | 4 | 5'-2" | 3 | 5'-2" | 47 | 0.200 | 0.543 | 1.738 | 0.180 | 0.243 |
| 48" | 3'-0" | 2'-2" | 5'-0" | 5'-0" | 5'-6" | 2'-10" | 6'-0" | 5 | 3'-1" | 4 | 5'-9" | 3 | 5'-9" | 51 | 0.235 | 0.667 | 2.052 | 0.235 | 0.317 |
| 54" | 3'-0" | 2'-2" | 5'-7" | 5'-7" | 6'-0" | 3'-5" | 6'-7" | 6 | 3'-8" | 5 | 6'-4" | 3 | 6'-4" | 56 | 0.289 | 0.802 | 2.387 | 0.297 | 0.401 |
| 60" | 3'-0" | 2'-2" | 6'-3" | 6'-3" | 6'-6" | 4'-1" | 7'-3" | 6 | 4'-4" | 5 | 7'-0" | 3 | 7'-0" | 61 | 0.340 | 0.973 | 2.722 | 0.363 | 0.546 |
| 66" | 3'-0" | 2'-2" | 6'-11" | 6'-11" | 7'-0" | 4'-9" | 7'-11" | 7 | 5'-0" | 6 | 7'-8" | 3 | 7'-8" | 66 | 0.391 | 1.160 | 3.057 | 0.440 | 0.655 |
| 72" | 3'-0" | 2'-2" | 7'-6" | 7'-6" | 7'-6" | 5'-3" | 8'-6" | 7 | 5'-6" | 6 | 8'-3" | 3 | 8'-3" | 72 | 0.442 | 1.340 | 3.392 | 0.524 | 0.774 |
| 78" | 3'-0" | 2'-2" | 8'-1" | 8'-1" | 8'-0" | 5'-11" | 9'-1" | 8 | 6'-2" | 7 | 8'-10" | 3 | 8'-10" | 78 | 0.493 | 1.530 | 3.727 | 0.615 | 0.893 |
| 84" | 3'-0" | 2'-2" | 8'-9" | 8'-9" | 8'-6" | 6'-7" | 9'-9" | 8 | 6'-10" | 7 | 9'-6" | 3 | 9'-6" | 84 | 0.544 | 1.760 | 4.062 | 0.713 | 1.010 |

SHEET 2 OF 2
**840D02**

STATE OF NORTH CAROLINA
DEPT. OF TRANSPORTATION
DIVISION OF HIGHWAYS
RALEIGH, N.C.

ENGLISH DETAIL DRAWING FOR
**MINIMUM DEPTH**
**CONCRETE CATCH BASIN**
12" THRU 84" PIPE

**CONTRACT STANDARDS AND DEVELOPMENT UNIT**
Office 919-707-6950 FAX 919-250-4119

**SEE PLATE FOR TITLE**

ORIGINAL BY: 2002 Std.840.01 DATE:
MODIFIED BY: E.E. WARD DATE: 3-1-02
CHECKED BY: DATE:
FILE SPEC.: s:\Special Details\jhowerton\840d02.dgn

DOCUMENT NOT CONSIDERED FINAL UNLESS ALL SIGNATURES COMPLETED

NORTH CAROLINA PROFESSIONAL SEAL 33144 ENGINEER

PROJECT REFERENCE NO. 49218.1
SHEET NO. 2C-3

| PROJECT REFERENCE NO. | SHEET NO. |
|---|---|
| 49218.1 | 3B-1 |

# SUMMARY OF QUANTITIES

| PROJECT NO | COUNTY | MAP NO | ROUTE | DESCRIPTION | TYP NO | LANES | LANE TYPE | FINAL SURFACE TESTING REQUIRED | WARM MIX ASPHALT REQUIRED | LENGTH | WIDTH | 0063000000-N GRADING | 0008000000-E SUPPLEMENTARY CLEARING AND GRUBBING | 0000400000-N CONSTRUCTION SURVEYING | 0318000000-E FOUNDATION CONDITIONING MATERIAL, MINOR STRS | 0320000000-E FOUNDATION CONDITIONING GEOTEXTILE | 0366000000-E 15" RC PIPE CULVERTS, CLASS III | 0372000000-E 18" RC PIPE CULVERTS, CLASS III | 0396000000-E 42" RC PIPE CULVERTS, CLASS III | 0448000000-E 60" RC PIPE CULVERTS, CLASS IV | 0448200000-E 15" RC PIPE CULVERTS, CLASS IV | 0448300000-E 18" RC PIPE CULVERTS, CLASS IV | 1121000000-E AGGREGATE BASE COURSE |
|---|---|---|---|---|---|---|---|---|---|---|---|---|---|---|---|---|---|---|---|---|---|---|---|
| | | | | | | | | | | MI | FT | LS | AC | LS | TONS | SY | LF | LF | LF | LF | LF | LF | TONS |
| 49218.1 | Cumberland | 1 | PRATT ST. | FROM RIFLE RANGE RD. TO OGDEN ST. | 1, 2 | 2 | 2WU | NO | NO | 0.474 | 21-22 | 1.00 | 1.00 | 1 | 60 | 180 | 32 | 12 | 16 | 176 | 156 | 196 | 92 |
| TOTAL FOR MAP NO. 1 | | | | | | | | | | 0.474 | | 1.00 | 1.00 | 1 | 60 | 180 | 32 | 12 | 16 | 176 | 156 | 196 | 92 |
| TOTAL FOR PROJ NO. 49218.1 | | | | | | | | | | 0.474 | | 1.00 | 1.00 | 1 | 60 | 180 | 32 | 12 | 16 | 176 | 156 | 196 | 92 |
| GRAND TOTAL | | | | | | | | | | 0.474 | | 1 | 1 | 1 | 60 | 180 | 32 | 12 | 16 | 176 | 156 | 196 | 92 |

| PROJECT NO | COUNTY | MAP NO | ROUTE | DESCRIPTION | TYP NO | LANES | LANE TYPE | FINAL SURFACE TESTING REQUIRED | WARM MIX ASPHALT REQUIRED | LENGTH | WIDTH | 1220000000-E INCIDENTAL STONE BASE | 1297000000-E MILLING ASPHALT PAVEMENT, 9.5" DEPTH | 1297000000-E MILLING ASPHALT PAVEMENT, 11" DEPTH | 1330000000-E INCIDENTAL MILLING | 1491000000-E BASE COURSE, B25.0C | 1503000000-E INTERMEDIATE COURSE, I19.0C | 1523000000-E SURFACE COURSE, S9.5C | 1575000000-E ASPHALT BINDER FOR PLANT MIX | 1693000000-E ASPHALT PLANT MIX, PAVEMENT REPAIR | 2286000000-N MASONRY DRAINAGE STRUCTURES | 2308000000-N MASONRY DRAINAGE STRUCTURES | 2363000000-N FRAME WITH TWO GRATES, STD 840.29 |
|---|---|---|---|---|---|---|---|---|---|---|---|---|---|---|---|---|---|---|---|---|---|---|---|
| | | | | | | | | | | MI | FT | TONS | SY | SY | SY | TONS | TONS | TONS | TON | TON | EA | LF | EA |
| 49218.1 | Cumberland | 1 | PRATT ST. | FROM RIFLE RANGE RD. TO OGDEN ST. | 1, 2 | 2 | 2WU | NO | NO | 0.474 | 21-22 | 15 | 5,029 | 1,790 | 716 | 1,700 | 1,182 | 1,150 | 205 | 100 | 18 | 0.80 | 1 |
| TOTAL FOR MAP NO. 1 | | | | | | | | | | 0.474 | | 15 | 5,029 | 1,790 | 716 | 1,700 | 1,182 | 1,150 | 205 | 100 | 18 | 0.80 | 1 |
| TOTAL FOR PROJ NO. 49218.1 | | | | | | | | | | 0.474 | | 15 | 5,029 | 1,790 | 716 | 1,700 | 1,182 | 1,150 | 205 | 100 | 18 | 0.80 | 1 |
| GRAND TOTAL | | | | | | | | | | 0.474 | | 15 | 5,029 | 1,790 | 716 | 1,700 | 1,182 | 1,150 | 205 | 100 | 18 | 0.80 | 1 |

| PROJECT NO | COUNTY | MAP NO | ROUTE | DESCRIPTION | TYP NO | LANES | LANE TYPE | FINAL SURFACE TESTING REQUIRED | WARM MIX ASPHALT REQUIRED | LENGTH | WIDTH | 2374000000-N FRAME WITH GRATE, STD 840.03, TYPE E | 2374000000-N FRAME WITH GRATE, STD 840.03, TYPE F | 2374000000-N FRAME WITH GRATE, STD 840.03, TYPE G | 2549000000-E 2'-6" CURB & GUTTER | 2570000000-E MODIFIED CONCRETE FLUME | 2591000000-E 4" CONCRETE SIDEWALK | 2605000000-N CONCRETE CURB RAMP | 2612000000-E 6" CONCRETE DRIVEWAY | 2830000000-N ADJUSTMENT OF MANHOLES | 2845000000-N ADJUSTMENT OF METER BOXES OR VALVE BOXES | 3572000000-E CHAIN LINK FENCE RESET | 3635000000-E RIP RAP, CLASS II | 3656000000-E GEOTEXTILE FOR DRAINAGE |
|---|---|---|---|---|---|---|---|---|---|---|---|---|---|---|---|---|---|---|---|---|---|---|---|---|
| | | | | | | | | | | MI | FT | EA | EA | EA | LF | EA | SY | EA | SY | EA | EA | LF | TONS | SY |
| 49218.1 | Cumberland | 1 | PRATT ST. | FROM RIFLE RANGE RD. TO OGDEN ST. | 1, 2 | 2 | 2WU | NO | NO | 0.474 | 21-22 | 5 | 4 | 6 | 1,140 | 3 | 32 | 1 | 390 | 1 | 2 | 100 | 56 | 532 |
| TOTAL FOR MAP NO. 1 | | | | | | | | | | 0.474 | | 5 | 4 | 6 | 1,140 | 3 | 32 | 1 | 390 | 1 | 2 | 100 | 56 | 532 |
| TOTAL FOR PROJ NO. 49218.1 | | | | | | | | | | 0.474 | | 5 | 4 | 6 | 1,140 | 3 | 32 | 1 | 390 | 1 | 2 | 100 | 56 | 532 |
| GRAND TOTAL | | | | | | | | | | 0.474 | | 5 | 4 | 6 | 1,140 | 3 | 32 | 1 | 390 | 1 | 2 | 100 | 56 | 532 |
| | | | | | | | | | | | | 15 | | | | | | | | | | | | |

| PROJECT NO | COUNTY | MAP NO | ROUTE | DESCRIPTION | TYP NO | LANES | LANE TYPE | FINAL SURFACE TESTING REQUIRED | WARM MIX ASPHALT REQUIRED | LENGTH | WIDTH | 6000000000-E TEMPORARY SILT FENCE | 6006000000-E STONE FOR EROSION CONTROL , CLASS A | 6012000000-E SEDIMENT CONTROL STONE | 6015000000-E TEMPORARY MULCHING | 6018000000-E SEED FOR TEMPORARY SEEDING | 6021000000-E FERTILIZER FOR TEMPORARY SEEDING | 6029000000-E SAFETY FENCE | 6030000000-E SILT EXCAVATION | 6036000000-E MATTING FOR EROSION CONTROL | 6042000000-E 1/4" HARDWARE CLOTH | 6070000000-N SPECIAL STILLING BASINS | 6071010000-E WATTLE | 6084000000-E SEED & MULCHING |
|---|---|---|---|---|---|---|---|---|---|---|---|---|---|---|---|---|---|---|---|---|---|---|---|---|
| | | | | | | | | | | MI | FT | LF | TONS | TONS | AC | LB | TON | LF | CY | SY | LF | EA | LF | AC |
| 49218.1 | Cumberland | 1 | PRATT ST. | FROM RIFLE RANGE RD. TO OGDEN ST. | 1, 2 | 2 | 2WU | NO | NO | 0.474 | 21-22 | 1,895 | 145 | 190 | 1 | 100 | 0.5 | 180 | 40 | 950 | 655 | 2 | 20 | 3.00 |
| TOTAL FOR MAP NO. 1 | | | | | | | | | | 0.474 | | 1,895 | 145 | 190 | 1 | 100 | 0.5 | 180 | 40 | 950 | 655 | 2 | 20 | 3.00 |
| TOTAL FOR PROJ NO. 49218.1 | | | | | | | | | | 0.474 | | 1,895 | 145 | 190 | 1 | 100 | 0.5 | 180 | 40 | 950 | 655 | 2 | 20 | 3.00 |
| GRAND TOTAL | | | | | | | | | | 0.474 | | 1,895 | 145 | 190 | 1 | 100 | 0.50 | 180 | 40 | 950 | 655 | 2 | 20 | 3.00 |

| PROJECT NO | COUNTY | MAP NO | ROUTE | DESCRIPTION | TYP NO | LANES | LANE TYPE | FINAL SURFACE TESTING REQUIRED | WARM MIX ASPHALT REQUIRED | LENGTH | WIDTH | 6090000000-E SEED FOR REPAIR SEEDING | 6093000000-E FERTILIZER FOR REPAIR SEEDING | 6096000000-E SEED FOR SUPPLEMENTAL SEEDING | 6093000000-E FERTILIZER TOPDRESSING | 6111000000-E IMPERVIOUS DIKE | 6117000000-N RESPONSE FOR EROSION CONTROL | 6117500000-N CONCRETE WASHOUT STRUCTURE | 8065000000-N ASBESTOS ASSESMENT | 8196000000-E CLASS A CONCRETE (CULVERT) | 8245000000-E REIFORCING STEEL (CULVERT) | 8496000000-E 1.5" GALVANIZED STEEL PIPE RAIL |
|---|---|---|---|---|---|---|---|---|---|---|---|---|---|---|---|---|---|---|---|---|---|---|
| | | | | | | | | | | MI | FT | LB | TON | LB | TON | LF | EA | EA | LS | CY | LB | LF |
| 49218.1 | Cumberland | 1 | PRATT ST. | FROM RIFLE RANGE RD. TO OGDEN ST. | 1, 2 | 2 | 2WU | NO | NO | 0.474 | 21-22 | 50 | 0.25 | 50 | 0.50 | 41.00 | 25 | 3 | 1 | 38.00 | 3,693 | 62.73 |
| TOTAL FOR MAP NO. 1 | | | | | | | | | | 0.474 | | 50 | 0.25 | 50 | 0.50 | 41.00 | 25 | 3 | 1 | 38.00 | 3,693 | 62.73 |
| TOTAL FOR PROJ NO. 49218.1 | | | | | | | | | | 0.474 | | 50 | 0.25 | 50 | 0.50 | 41.00 | 25 | 3 | 1 | 38.00 | 3,693 | 62.73 |
| GRAND TOTAL | | | | | | | | | | 0.474 | | 50 | 0.25 | 50 | 0.50 | 41.00 | 25 | 3 | 1 | 38.00 | 3,693 | 62.73 |

REVISIONS

8/17/99

2/1/2024
:\3rd Let\49218.1_SQ0 PSH .dgn
:\Backgrnd\

**49218.1**

**FORT LIBERTY RESURFACING**

| PROJECT REFERENCE NO. | SHEET NO. |
|---|---|
| 49218.1 | 3B-2 |

# SUMMARY OF QUANTITIES

| | | | | | | | | | | 4400000000-E | 4410000000-E | 4445000000-E | 4685000000-E | | 4709000000-E | 4900000000-N | |
|---|---|---|---|---|---|---|---|---|---|---|---|---|---|---|---|---|---|
| PROJECT NO | COUNTY | MAP NO | ROUTE | DESCRIPTION | TYP NO | LANES | LANE TYPE | LENGTH | WIDTH | STATIONARY WORK ZONE SIGN | BARRICADE MOUNTED WORK ZONE SIGN | TYPE III BARICADE | 4" X 90 M WHITE THERMO | 4" X 90 M YELLOW THERMO | 24" X 90 M WHITE THERMO | CRYSTAL & RED MARKERS | YELLOW & YELLOW MARKERS |
| | | | | | | | | MI | FT | SF | SF | LF | LF | LF | LF | EA | EA |
| 49218.1 | Cumberland | 1 | PRATT ST. | FROM RIFLE RANGE RD. TO OGDEN ST. | 1, 2 | 2 | 2WU | 0.474 | 21-22 | 420 | 450 | 280 | | 5,000 | 120 | | 70 |
| **TOTAL FOR MAP NO. 1** | | | | | | | | **0.474** | | **420** | **450** | **280** | | **5,000** | **120** | | **70** |
| | | | | | | | | | | | | | | | | | |
| **TOTAL FOR PROJ NO. 49218.1** | | | | | | | | **0.474** | | **420** | **450** | **280** | | **5,000** | **120** | | **70** |
| | | | | | | | | | | | | | | | | **70** | |
| | | | | | | | | | | | | | | | | | |
| **GRAND TOTAL** | | | | | | | | **0.474** | | **420** | **450** | **280** | | **5,000** | **120** | | **70** |
| | | | | | | | | | | | | | **5,000** | | | **70** | |

REVISIONS

8/17/99

1/8/2024
:\3rd Let\49218.1.500 PSH .dgn
jsefrisk:eenedi

***49218.1***

***FORT LIBERTY RESURFACING***

WEI-3JP26S3

| COMPUTED BY: | Katie Estep | DATE: | 2/1/2024 |
|---|---|---|---|
| CHECKED BY: | Kevin Alford | DATE: | 5/15/2023 |

| PROJECT NO. | SHEET NO. |
|---|---|
| 49218.1 | 3D-1 |

# NORTH CAROLINA DEPARTMENT OF TRANSPORTATION
# DIVISION OF HIGHWAYS

**Note: Invert Elevations indicated are for Bid Purposes only and shall not be used for project construction stakeout.
See "Standard Specifications For Roads and Structures, Section 300-5".**

## *LIST OF PIPES, ENDWALLS, ETC. (FOR PIPES 48 INCHES & UNDER)*

| LINE & STATION / SIZE / THICKNESS OR GAUGE | OFFSET | STRUCTURE NUMBER FROM | TO | TOP ELEVATION FT. | INVERT ELEVATION FT. | INVERT ELEVATION FT. | MINIMUM REQUIRED SLOPE % | R. C. PIPE CLASS III 12 | 15 | 18 | 24 | 30 | 36 | 42 | 48 | 54 | 60 | R. C. PIPE CLASS IV 12 | 15 | 18 | 24 | 30 | 36 | 42 | 48 | 54 | 60 |
|---|---|---|---|---|---|---|---|---|---|---|---|---|---|---|---|---|---|---|---|---|---|---|---|---|---|---|---|
| EL 11+34 | 27 RT | 0401 | | 256.9 | | | | | | | | | | | | | | | | | | | | | | | |
| | | 0401 | 0402 | | 254.6 | 254.4 | | | | | | | | | | | | | | 4 | | | | | | | |
| EL 11+32 | 24 RT | 0402 | | 256.9 | | | | | | | | | | | | | | | | | | | | | | | |
| | | 0402 | 0403 | | 254.4 | 253.9 | | | | | | | | | | | | | | 44 | | | | | | | |
| EL 11+31 | 22 LT | 0403 | | 256.4 | | | | | | | | | | | | | | | | | | | | | | | |
| | | 0403 | 0404 | | 253.9 | 253.7 | | | | | | | | | | | | | | 4 | | | | | | | |
| EL 11+34 | 25 LT | 0404 | | 256.4 | | | | | | | | | | | | | | | | | | | | | | | |
| | | 0404 | 0405 | | 253.7 | 253.5 | | | | | | | | | | | | | | 4 | | | | | | | |
| EL 11+31 | 30 LT | 0405 | | 257.0 | | | | | | | | | | | | | | | | | | | | | | | |
| EL 12+00 | 14 RT | 0406 | | 256.6 | | | | | | | | | | | | | | | | | | | | | | | |
| | | 0406 | 0407 | | 253.6 | 253.1 | | | | | | | | | | | | | 28 | | | | | | | | |
| EL 12+00 | 14 LT | 0407 | | 256.1 | | | | | | | | | | | | | | | | | | | | | | | |
| | | 0407 | 0408 | | 253.1 | 252.4 | | | | | | | | | | | | | 28 | | | | | | | | |
| EL 11+83 | 36 LT | 0408 | | 256.4 | | | | | | | | | | | | | | | | | | | | | | | |
| EL 16+49 | 14 RT | 0409 | | 251.3 | | | | | | | | | | | | | | | | | | | | | | | |
| | | 0409 | 0410 | | 248.3 | 248.2 | | | | | | | | | | | | | 36 | | | | | | | | |
| EL 16+10 | 13 RT | 0410 | | 252.0 | | | | | | | | | | | | | | | | | | | | | | | |
| | | 0410 | 0411 | | 248.2 | 248.1 | | | | | | | | | | | | | | 24 | | | | | | | |
| EL 16+10 | 14 LT | 0411 | | 251.3 | | | | | | | | | | | | | | | | | | | | | | | |
| | | 0411 | 0412 | | 248.1 | 247.2 | | | | | | | | | | | | | | 84 | | | | | | | |
| EL 16+94 | 13 LT | 0412 | | 250.4 | | | | | | | | | | | | | | | | | | | | | | | |
| | | 0412 | 0422 | | 247.2 | 244.8 | | | | | | | | | | | | | | 32 | | | | | | | |
| Y1 10+72 | 13 RT | 0413 | | 250.9 | | | | | | | | | | | | | | | | | | | | | | | |
| | | 0413 | 0414 | | 247.9 | 247.4 | | | 24 | | | | | | | | | | | | | | | | | | |
| Y1 10+48 | 13 RT | 0414 | | 250.6 | | | | | | | | | | | | | | | | | | | | | | | |
| | | 0414 | 0427 | | 247.4 | 247.2 | | | | 12 | | | | | | | | | | | | | | | | | |
| Y1 10+39 | 16 LT | 0415 | | 250.9 | | | | | | | | | | | | | | | | | | | | | | | |
| | | 0415 | 0429 | | 247.9 | 247.7 | | | 8 | | | | | | | | | | | | | | | | | | |
| EL 17+66 | 13 RT | 0416 | | 251.0 | | | | | | | | | | | | | | | | | | | | | | | |
| | | 0416 | 0417 | | 248.0 | 247.1 | | | | | | | | | | | | | 24 | | | | | | | | |
| EL 17+65 | 13 LT | 0417 | | 250.1 | | | | | | | | | | | | | | | | | | | | | | | |
| | | 0417 | 0418 | | 247.1 | 243.7 | | | | | | | | | | | | | 40 | | | | | | | | |
| EL 17+25 | 12 LT | 0418 | | 249.5 | | | | | | | | | | | | | | | | | | | | | | | |
| | | 0418 | 0428 | | 243.7 | 243.3 | | | | | | | | 16 | | | | | | | | | | | | | |
| Y1 10+28 | 19 LT | 0419 | | | | | | | | | | | | | | | | | | | | | | | | | |
| EL 17+19 | 11 LT | 0420 | | | | | | | | | | | | | | | | | | | | | | | | | |
| EL 18+13 | 11 LT | 0421 | | | | | | | | | | | | | | | | | | | | | | | | | |
| SHEET TOTALS | | | | | | | | | 32 | 12 | | | | 16 | | | | | 156 | 196 | | | | | | | |
| PROJECT TOTALS | | | | | | | | | 32 | 12 | | | | 16 | | | | | 156 | 196 | | | | | | | |

| LINE & STATION | STRUCTURE NO. | QUANTITIES FOR DRAINAGE STRUCTURES (NOTE: TOTAL LIN. FT. FOR PAY QUANTITY SHALL BE A + (1.3 X B)) A: 0' THRU 5' EACH | B: 5' THRU 10' LIN. FT. | B: 10' AND ABOVE LIN. FT. | C.B. STD. 840.01 OR STD. 840.02 | FRAME, GRATES, AND HOOD STD. 840.03 GRATE TYPE E | F | G | CONCRETE TRANSITIONAL SECTION D.I. STD. 852.04 OR STD. 852.06 | C.B. STD. 852.05 | OPEN THROAT C.B. STD. 840.04 OR STD. 840.05 | CONCRETE BRIDGE APPROACH D.I. STD. 840.13 | D.I. STD. 840.14 OR STD. 840.15 | D.I. FRAME AND GRATES STD. 840.16 | G.D.I. TYPE "A" STD. 840.17 OR STD. 840.26 | G.D.I. TYPE "B" STD. 840.18 OR STD. 840.27 | G.D.I. TYPE "D" STD. 840.19 OR STD. 840.28 | G.D.I. (W.S. FLAT) FRAME WITH GRATE STD. 840.20 | G.D.I. (W.S. FLAT) FRAME W/ 2 GRATES STD. 840.20 | G.D.I. (W.S. SAG) FRAME W/ GRATE STD. 840.22 | G.D.I. (W.S. SAG) FRAME W/ 2 GRATES STD. 840.22 | G.D.I. (N.S. SAG) FRAME W/ GRATE STD. 840.24 | G.D.I. (N.S. SAG) FRAME W/ 2 GRATES STD. 840.24 | G.D.I. (N.S. FLAT) FRAME W/ GRATE STD. 840.29 | G.D.I. (N.S. FLAT) FRAME W/ 2 GRATES STD. 840.29 | DRIVEWAY D.I. STD. 840.30 | FRAME W/ GRATE FOR DRIVEWAY STD. 840.30 | J.B. STD. 840.31 OR STD. 840.32 | ANGLED VANE GRATES AND FRAMES STD. 840.33 | T.B.J.B. STD. 840.34 | T.B.D.I. STD. 840.35 | T.B.D.I. FOR STEEL GRATES STD. 840.36 | STEEL FRAME WITH TWO GRATES STD. 840.37 | TEMP STEEL PLATE COVER MASONRY DRAINAGE | ##" SPRING BOX PIPE | SPRING BOX STD. 840.41 | M.H. STD. 840.51, STD. 840.52, OR STD. 840.53 | M.H. FRAME AND COVER STD. 840.54 | ##" x ##" x ##" PERF. C.S.P. TEE RISER ##" THICK | BERM DITCH OUTLET STD. 850.10 (PER EACH) | BERM DITCH OUTLET STD. 850.11 (PER EACH) | ##" SLUICE GATE (##" SIZE SLUICE GATE) | MODIFIED CONC. FLUME | PREFORMED SCOUR HOLE (PER EACH) | ENERGY DISSIPATION BASIN | FLOWABLE FILL CY | CONCRETE COLLARS CL. "B" STD. 840.72 CY | CONCRETE AND BRICK PIPE PLUG STD. 840.71 CY | PIPE REMOVAL LIN. FT. | REMARKS |
|---|---|---|---|---|---|---|---|---|---|---|---|---|---|---|---|---|---|---|---|---|---|---|---|---|---|---|---|---|---|---|---|---|---|---|---|---|---|---|---|---|---|---|---|---|---|---|---|---|---|---|
| EL 11+34 | 0401 | 1 | | | 1 | 1 | | | | | | | | | | | | | | | | | | | | | | | | | | | | | | | | | | | | | | | | | | | | |
| EL 11+32 | 0402 | 1 | | | 1 | 1 | | | | | | | | | | | | | | | | | | | | | | | | | | | | | | | | | | | | | | | | | | | | |
| EL 11+31 | 0403 | 1 | | | 1 | 1 | | | | | | | | | | | | | | | | | | | | | | | | | | | | | | | | | | | | | | | | | | | | |
| EL 11+34 | 0404 | 1 | | | 1 | 1 | | | | | | | | | | | | | | | | | | | | | | | | | | | | | | | | | | | | | | | | | | | | |
| EL 11+31 | 0405 | 1 | | | | | | | | | | | | | | | | | | | | | | | | | | 1 | | | | | | | | | | | | | | | | | | | | | | Special JB w/ Slab Lid (Min. Depth) - See Sheet 2C-3 |
| EL 12+00 | 0406 | 1 | | | 1 | | 1 | | | | | | | | | | | | | | | | | | | | | | | | | | | | | | | | | | | | | | | | | | | |
| EL 12+00 | 0407 | 1 | | | 1 | | | 1 | | | | | | | | | | | | | | | | | | | | | | | | | | | | | | | | | | | | | | | | | | |
| EL 11+83 | 0408 | 1 | | | | | | | | | | | | | | 1 | | | | | | | | | 1 | | | | | | | | | | | | | | | | | | | | | | | | | |
| EL 16+49 | 0409 | 1 | | | 1 | | 1 | | | | | | | | | | | | | | | | | | | | | | | | | | | | | | | | | | | | | | | | | | | |
| EL 16+10 | 0410 | 1 | | | 1 | | 1 | | | | | | | | | | | | | | | | | | | | | | | | | | | | | | | | | | | | | | | | | | | |
| EL 16+10 | 0411 | 1 | | | 1 | | | 1 | | | | | | | | | | | | | | | | | | | | | | | | | | | | | | | | | | | | | | | | | | |
| EL 16+94 | 0412 | 1 | | | 1 | | | 1 | | | | | | | | | | | | | | | | | | | | | | | | | | | | | | | | | | | | | | | | | | |
| Y1 10+72 | 0413 | 1 | | | 1 | | | 1 | | | | | | | | | | | | | | | | | | | | | | | | | | | | | | | | | | | | | | | | | | |
| Y1 10+48 | 0414 | 1 | | | 1 | 1 | | | | | | | | | | | | | | | | | | | | | | | | | | | | | | | | | | | | | | | | | | | | |
| Y1 10+39 | 0415 | 1 | | | 1 | | | 1 | | | | | | | | | | | | | | | | | | | | | | | | | | | | | | | | | | | | | | | | | | |
| EL 17+66 | 0416 | 1 | | | 1 | | | 1 | | | | | | | | | | | | | | | | | | | | | | | | | | | | | | | | | | | | | | | | | | |
| EL 17+65 | 0417 | 1 | | | 1 | | 1 | | | | | | | | | | | | | | | | | | | | | | | | | | | | | | | | | | | | | | | | | | | |
| EL 17+25 | 0418 | 1 | 0.8 | | | | | | | | | | | | | | | | | | | | | | | | | | | 1 | | | | | | | | | | | | | | | | | | | | TB JB w/ Slab Lid |
| Y1 10+28 | 0419 | | | | | | | | | | | | | | | | | | | | | | | | | | | | | | | | | | | | | | | | | | 1 | | | | | | | |
| EL 17+19 | 0420 | | | | | | | | | | | | | | | | | | | | | | | | | | | | | | | | | | | | | | | | | | 1 | | | | | | | |
| EL 18+13 | 0421 | | | | | | | | | | | | | | | | | | | | | | | | | | | | | | | | | | | | | | | | | | 1 | | | | | | | |
| SHEET TOTALS | | 18 | 0.8 | | 15 | 5 | 4 | 6 | | | | | | | | 1 | | | | | | | | | 1 | | | 1 | | 1 | | | | | | | | | | | | | 3 | | | | | | | |
| PROJECT TOTALS | | 18 | 0.8 | | 15 | 5 | 4 | 6 | | | | | | | | 1 | | | | | | | | | 1 | | | 1 | | 1 | | | | | | | | | | | | | 3 | | | | | | | |

**ABBREVIATIONS**

| | |
|---|---|
| C.A.A. | CORRUGATED ALUMINIUM ALLOY |
| C.B. | CATCH BASIN |
| C.S. | CORRUGATED STEEL |
| D.I. | DROP INLET |
| G.D.I. | GRATED DROP INLET |
| H.D.P.E. | HIGH DENSITY POLYETHYLENE |
| J.B. | JUNCTION BOX |
| M.H. | MANHOLE |
| N.S. | NARROW SLOT |
| P.V.C. | POLYVINYL CHLORIDE |
| R.C. | REINFORCED CONCRETE |
| T.B.D.I. | TRAFFIC BEARING DROP INLET |
| T.B.J.B. | TRAFFIC BEARING JUNCTION BOX |
| W.S. | WIDE SLOT |

RAL-WS099

| | | | |
|---|---|---|---|
| COMPUTED BY: | Katie Estep | DATE: | 2/6/2023 |
| CHECKED BY: | Kevin Alford | DATE: | 2/6/2023 |

| PROJECT NO. | SHEET NO. |
|---|---|
| 49218.1 | 3D-2 |

# NORTH CAROLINA DEPARTMENT OF TRANSPORTATION
# DIVISION OF HIGHWAYS

**Note: Invert Elevations indicated are for Bid Purposes only and shall not be used for project construction stakeout.**
**See "Standard Specifications For Roads and Structures, Section 300-5".**

## *LIST OF PIPES, ENDWALLS, ETC. (FOR PIPES 54 INCHES & OVER)*

| LINE & STATION / SIZE / THICKNESS OR GAUGE | OFFSET | STRUCTURE NUMBER FROM | STRUCTURE NUMBER TO | TOP ELEVATION FT. | INVERT ELEVATION FT. | INVERT ELEVATION FT. | MINIMUM REQUIRED SLOPE % | R. C. PIPE CLASS IV 12 | 15 | 18 | 24 | 30 | 36 | 42 | 48 | 54 | 60 | 66 | 72 | 78 | 84 | | STRUCTURAL PLATE PIPE 60 | 66 | 72 | |
|---|---|---|---|---|---|---|---|---|---|---|---|---|---|---|---|---|---|---|---|---|---|---|---|---|---|---|
| EL 16+97 | 0 | 0423 | 0424 | | 244.2 | 243.3 | | | | | | | | | | | 88 | | | | | | | | | |
| EL 17+06 | 0 | 0425 | 0426 | | 244.2 | 243.3 | | | | | | | | | | | 88 | | | | | | | | | |
| SHEET TOTALS | | | | | | | | | | | | | | | | | 176 | | | | | | | | | |
| PROJECT TOTALS | | | | | | | | | | | | | | | | | 176 | | | | | | | | | |

| ##" R.C. PIPE CULVERTS, CONTRACTOR DESIGN | ##" R.C. PIPE CULVERTS, CONTRACTOR DESIGN | ##" R.C. PIPE CULVERTS, CONTRACTOR DESIGN | | ##" x ##" C.S. PIPE ARCH CULVERTS, ##" THICK | ##" x ##" C.S. STRUCTURAL PLATE PIPE ARCH, ## GAUGE | ##" WELDED STEEL PIPE ##" THICK, GRADE ## IN SOIL | ##" WELDED STEEL PIPE ##" THICK, GRADE ## NOT IN SOIL | ##" WELDED STEEL PIPE ##" THICK, GRADE B (UNDER RR) | | | | | | ENDWALLS STD. 838.01 OR STD. 838.11 (UNLESS NOTED OTHERWISE) CY | REINFORCED ENDWALLS CY | DRAINAGE STRUCTURE MASONRY CY | QUANTITIES FOR DRAINAGE STRUCTURES (NOTE: TOTAL LIN. FT. FOR PAY QUANTITY SHALL BE A + (1.3 X B)) 0' THRU 5' EACH | A 5' THRU 10' LIN. FT. | B 10' AND ABOVE LIN. FT. | C.B. STD. 840.01 OR STD. 840.02 | FRAME, GRATES, AND HOOD STD. 840.03 GRATE TYPE E | F | G | | CONCRETE TRANSITIONAL SECTION D.I. STD. 852.04 OR STD. 852.06 | C.B. STD. 852.05 | | BERM DITCH OUTLET STD. 850.11 (PER EACH) | | ##" SLUICE GATE (##" SIZE SLUICE GATE) | | MODIFIED CONC. FLUME | PREFORMED SCOUR HOLE (PER EACH) | ENERGY DISSIPATION BASIN | | FLOWABLE FILL CY | CONCRETE COLLARS CL. "B" STD. 840.72 CY | CONCRETE AND BRICK PIPE PLUG STD. 840.71 CY | PIPE REMOVAL LIN. FT. | REMARKS |
|---|---|---|---|---|---|---|---|---|---|---|---|---|---|---|---|---|---|---|---|---|---|---|---|---|---|---|---|---|---|---|---|---|---|---|---|---|---|---|---|---|---|
| | | | | | | | | | | | | | | | | | | | | | | | | | | | | | | | | | | | | | | | | | |

**ABBREVIATIONS**

| | |
|---|---|
| C.A.A. | CORRUGATED ALUMINIUM ALLOY |
| C.B. | CATCH BASIN |
| C.S. | CORRUGATED STEEL |
| D.I. | DROP INLET |
| G.D.I. | GRATED DROP INLET |
| H.D.P.E. | HIGH DENSITY POLYETHYLENE |
| J.B. | JUNCTION BOX |
| M.H. | MANHOLE |
| N.S. | NARROW SLOT |
| P.V.C. | POLYVINYL CHLORIDE |
| R.C. | REINFORCED CONCRETE |
| T.B.D.I. | TRAFFIC BEARING DROP INLET |
| T.B.J.B. | TRAFFIC BEARING JUNCTION BOX |
| W.S. | WIDE SLOT |

DocuSign Envelope ID: A0179726-B9DC-4464-BD36-9F7EF8844C74

| PROJECT REFERENCE NO. | SHEET NO. |
|---|---|
| 49218.1 | 4 |

ROADWAY DESIGN ENGINEER 1/8/2024 — NORTH CAROLINA PROFESSIONAL SEAL 018981 ENGINEER R. K. MURPHY, JR. — DocuSigned by: R. K. Murphy, Jr.

HYDRAULICS ENGINEER 1/8/2024 — NORTH CAROLINA PROFESSIONAL SEAL 15833 ENGINEER JERRY L. LINDSEY — DocuSigned by: Jerry L. Lindsey

**DOCUMENT NOT CONSIDERED FINAL UNLESS ALL SIGNATURES COMPLETED**

-EL- STA. 11+08.28

TIE TO NEW PAVEMENT JOINT
BEGIN PROJECT
BEGIN OVERLAY

1. CONTRACTOR TO COORDINATE WITH NEC AND SANDHILLLS TO AVOID CONFLICT WITH EXISTING U/G CABLES CROSSING PRATT STREET AND PROPOSED DRAINAGE/CATCH BASINS. ADJUST DRAINAGE PIPES OR CATCH BASINS TO AVOID CONFLICT WITH THE EXISTING U/G CABLES.

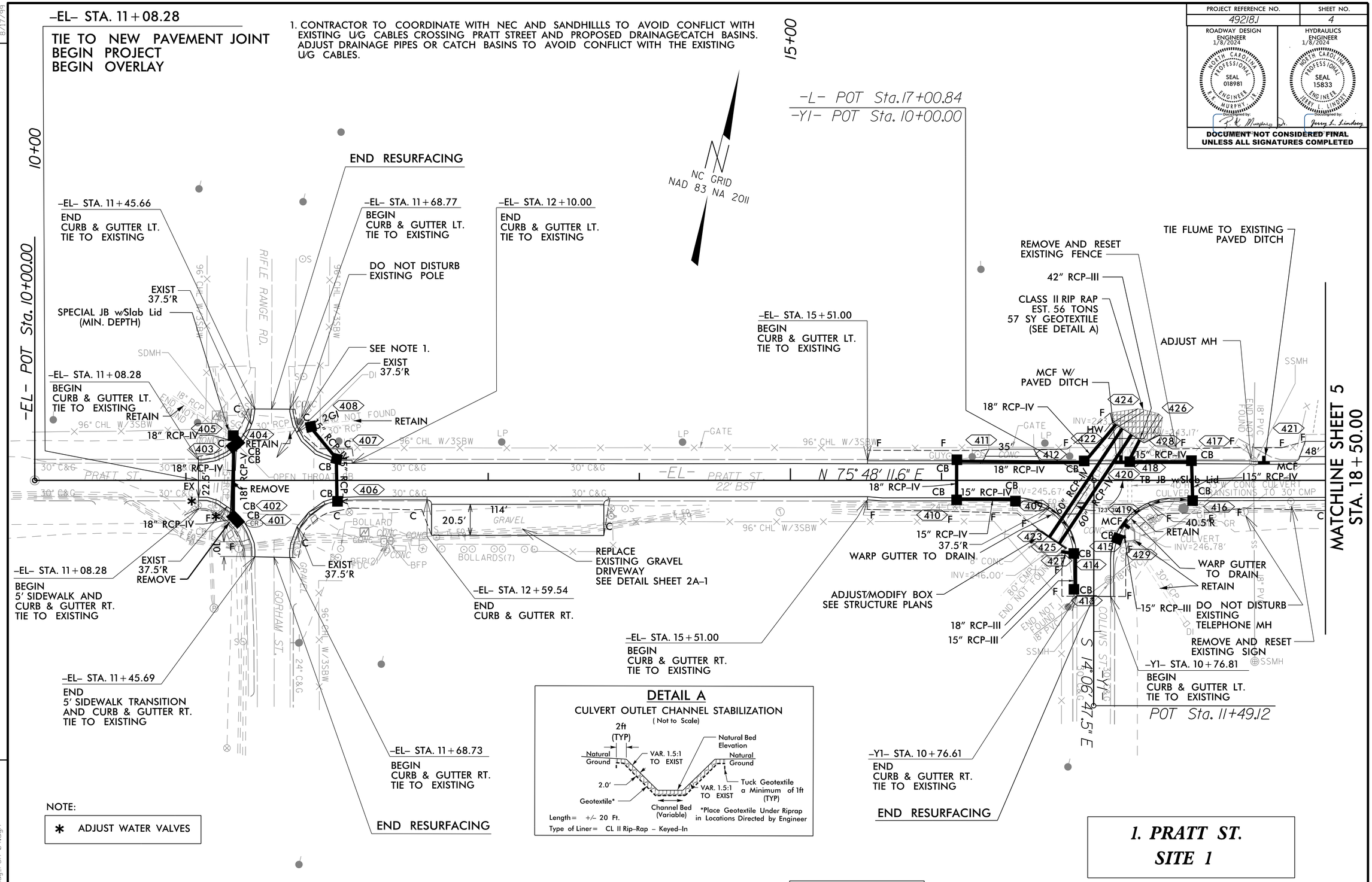


NOTE:

* ADJUST WATER VALVES

## DETAIL A

CULVERT OUTLET CHANNEL STABILIZATION

( Not to Scale)




Length = +/- 20 Ft.
Type of Liner = CL II Rip-Rap - Keyed-In

| Point | North | East | Elevation |
|---|---|---|---|
| 1 | 511107.6510 | 1991394.0670 | 251.0470 |
| 2 | 511430.5800 | 1992659.7310 | 260.9710 |

**SCALE: 1"=30'**

**1. PRATT ST.**
**SITE 1**

**49218.1**

**FORT LIBERTY RESURFACING**

1/5/2024
49218.1_Pratt_Rdy_PSH 04.dgn
USER:Rskeggs

DocuSign Envelope ID: BAA8D416-E682-4205-B576-574858D37567

| PROJECT REFERENCE NO. | SHEET NO. |
|---|---|
| 49218.1 | 5 |

**DOCUMENT NOT CONSIDERED FINAL UNLESS ALL SIGNATURES COMPLETED**

ROADWAY DESIGN ENGINEER
8/15/2023

NORTH CAROLINA PROFESSIONAL SEAL 018981 ENGINEER R. K. MURPHY

DocuSigned by: R. K. Murphy, Jr.
687DF3E849AF42C...

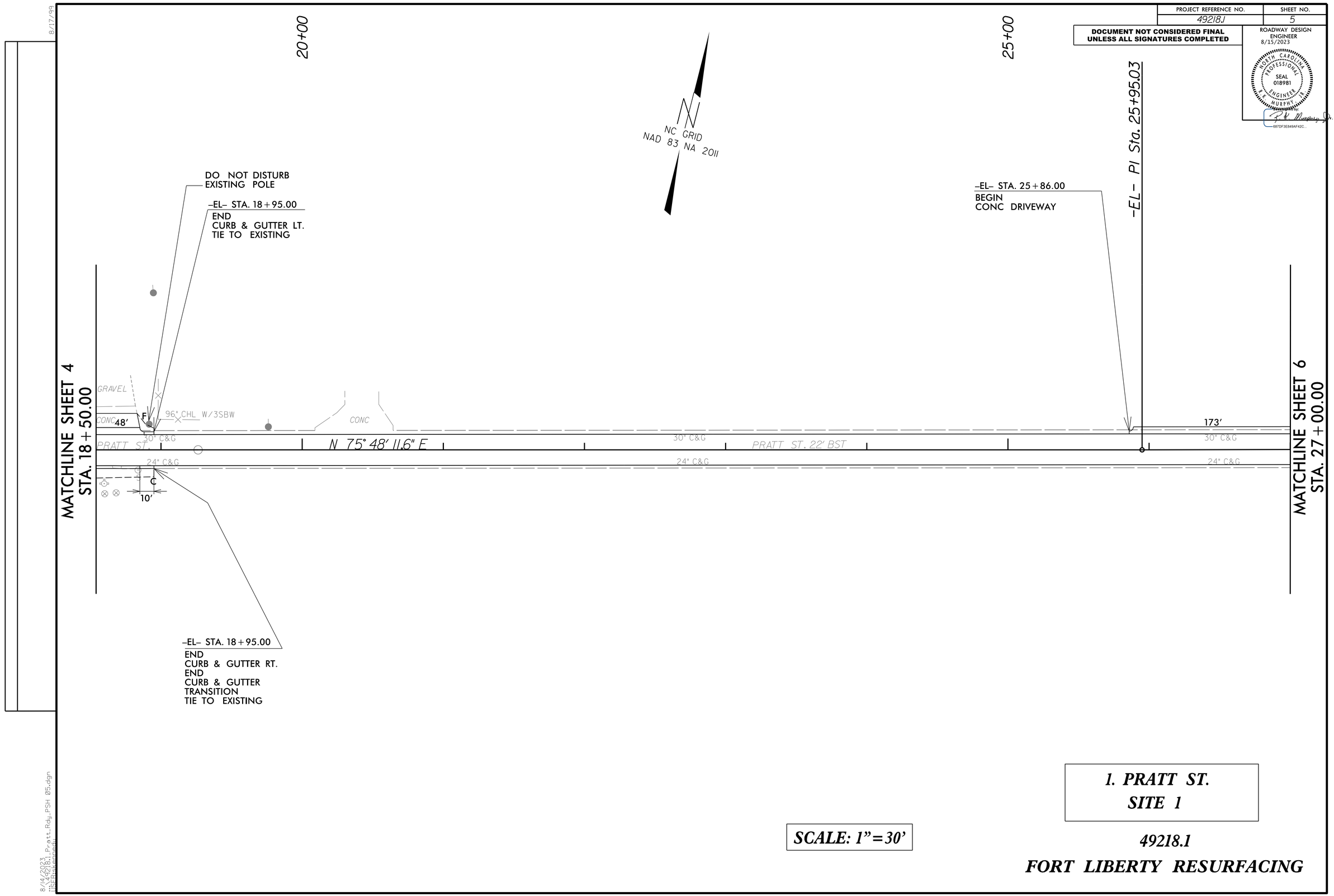


**1. PRATT ST.**
**SITE 1**

**SCALE: 1"=30'**

**49218.1**
**FORT LIBERTY RESURFACING**

8/17/99

8/14/2023
49218.1_Pratt_Rdy_PSH 05.dgn
USER:Rskennedy

DocuSign Envelope ID: BAA8D416-E682-4205-B576-574858D37567

8/17/99

| PROJECT REFERENCE NO. | SHEET NO. |
|---|---|
| 49218.1 | 6 |

ROADWAY DESIGN ENGINEER 8/15/2023
NORTH CAROLINA PROFESSIONAL SEAL 018981 ENGINEER R. K. MURPHY
DocuSigned by: R. K. Murphy, Jr.

HYDRAULICS ENGINEER 8/15/2023
NORTH CAROLINA PROFESSIONAL SEAL 15833 ENGINEER JERRY L. LINDSEY
DocuSigned by: Jerry L. Lindsey

**DOCUMENT NOT CONSIDERED FINAL UNLESS ALL SIGNATURES COMPLETED**

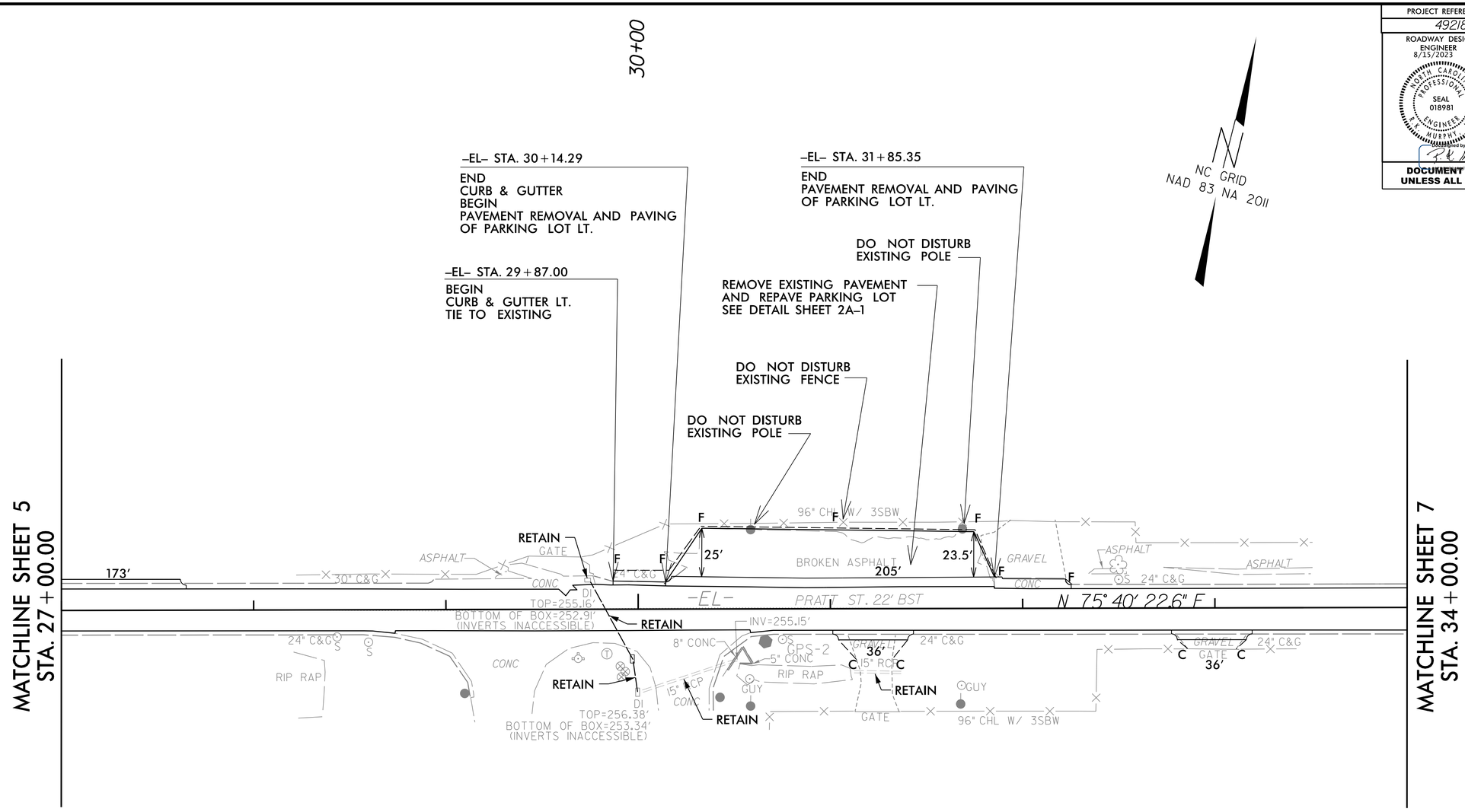


| Point | North | East | Elevation |
|---|---|---|---|
| 1 | 511107.6510 | 1991394.0670 | 251.0470 |
| 2 | 511430.5800 | 1992659.7310 | 260.9710 |

***1. PRATT ST.***
***SITE 1***

***SCALE: 1"=30'***

***49218.1***

***FORT LIBERTY RESURFACING***

8/4/2023
49218.1_Pratt_Rdy_PSH 06.dgn
USER:Rskenpol

DocuSign Envelope ID: BAA8D416-E682-4205-B576-574858D37567

| PROJECT REFERENCE NO. | SHEET NO. |
|---|---|
| 49218.1 | 7 |

| ROADWAY DESIGN ENGINEER | HYDRAULICS ENGINEER |
|---|---|
| 8/15/2023 | 8/15/2023 |
| NORTH CAROLINA PROFESSIONAL SEAL 018981 ENGINEER R. K. MURPHY | NORTH CAROLINA PROFESSIONAL SEAL 15833 ENGINEER JERRY L. LINDSEY |
| DocuSigned by: R. K. Murphy, Jr. | DocuSigned by: Jerry L. Lindsey |

**DOCUMENT NOT CONSIDERED FINAL UNLESS ALL SIGNATURES COMPLETED**

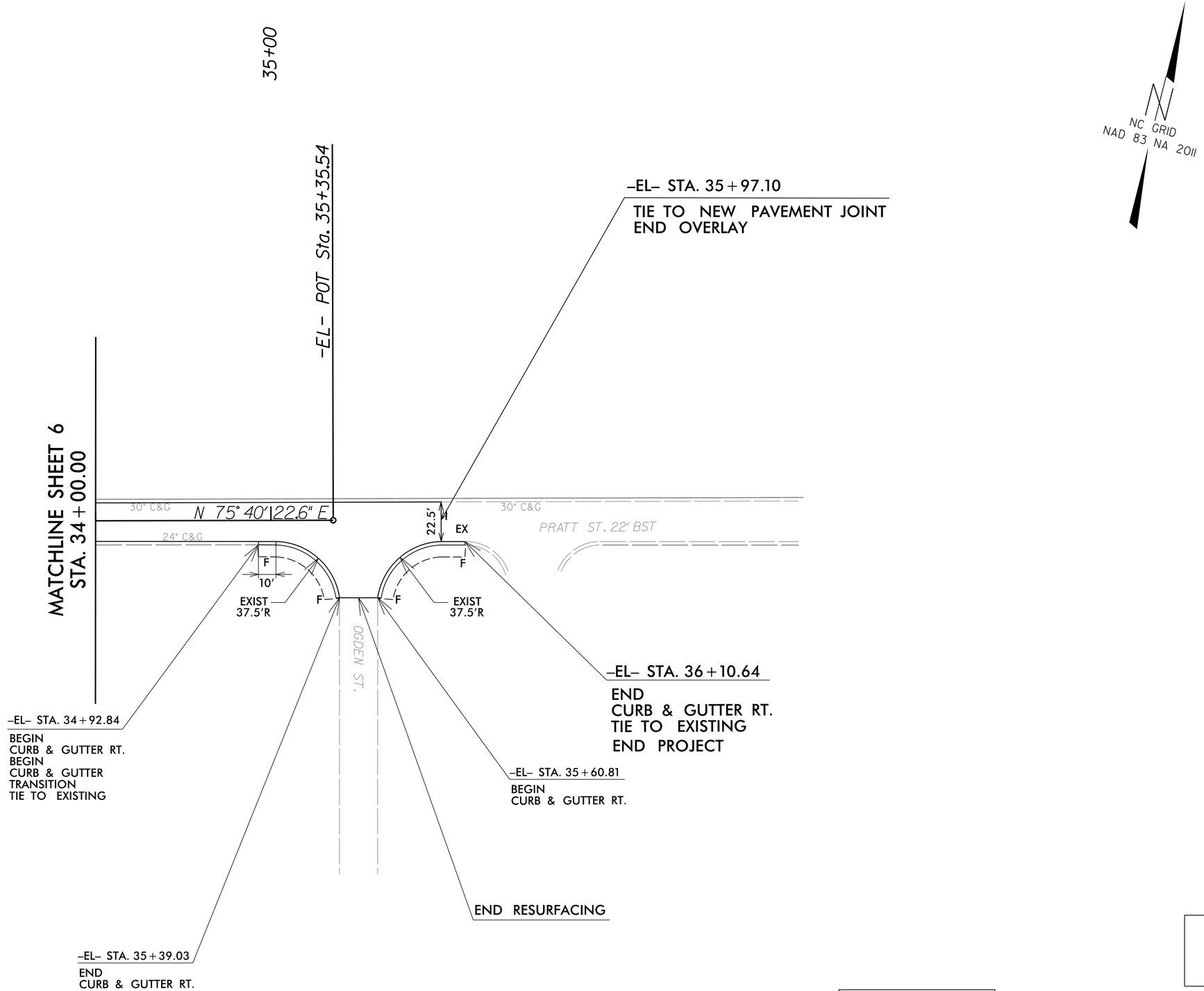


**SCALE: 1"=30'**

**1. PRATT ST.**
**SITE 1**

**49218.1**

**FORT LIBERTY RESURFACING**

8/17/23

8/14/2023
49218.1 Pratt_Rdy_PSH 07.dgn
USER:Raskempedi

DocuSign Envelope ID: BAA8D416-E682-4205-B576-574858D37567

| PROJECT REFERENCE NO. | SHEET NO. |
|---|---|
| 49218J | 8 |

ROADWAY DESIGN ENGINEER
8/15/2023

NORTH CAROLINA PROFESSIONAL SEAL 018981 ENGINEER R. K. MURPHY, JR.

DOCUMENT NOT CONSIDERED FINAL UNLESS ALL SIGNATURES COMPLETED

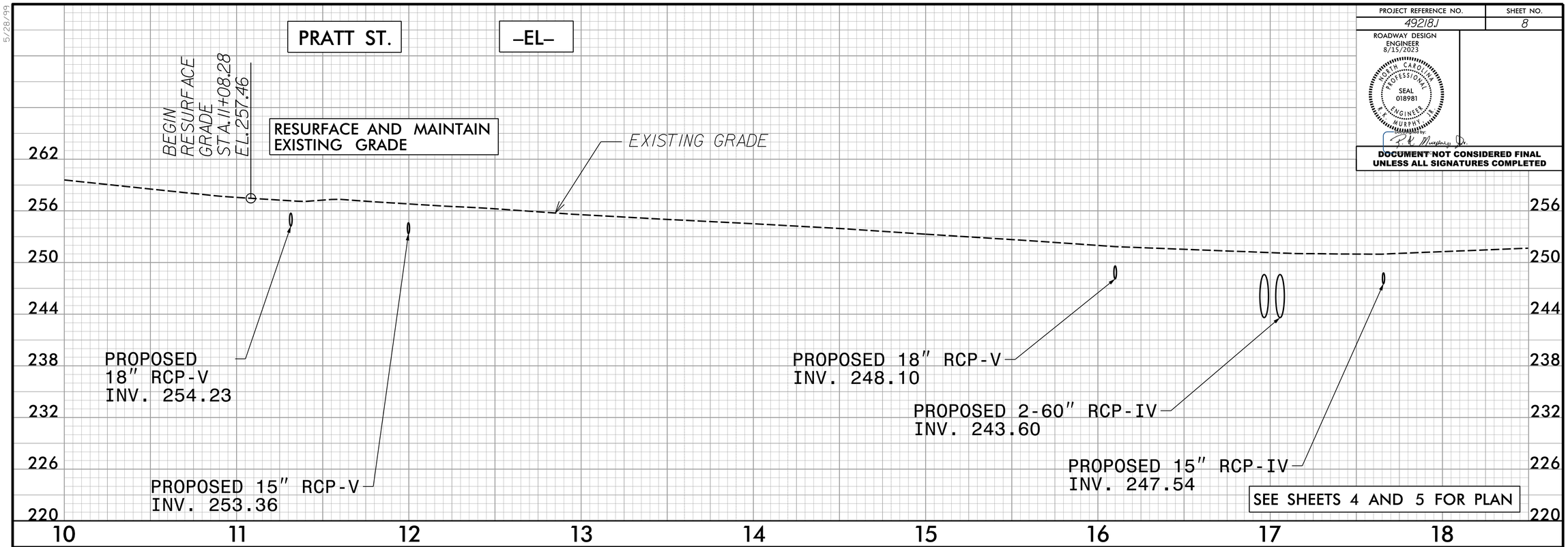


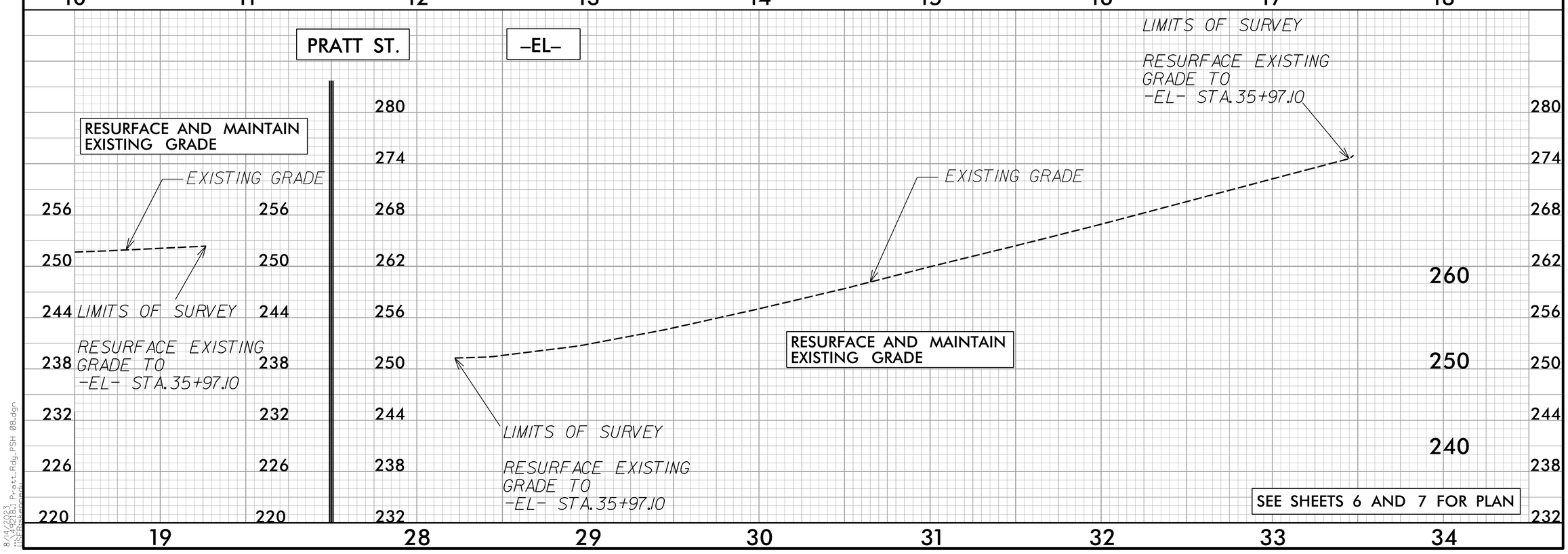


5/28/99
8/14/2023
49218J_Pratt_Rdy_PSH 08.dgn
TSERBIN(engrd)

DocuSign Envelope ID: 6B99A4E5-4FF0-4602-BE0F-060AD9678DF8

5/14/99

| PROJECT REFERENCE NO. | SHEET NO. |
|---|---|
| 49218.1 | 9 |
| R/W SHEET NO. | |
| ROADWAY DESIGN ENGINEER 11/28/2023 | HYDRAULICS ENGINEER 11/28/2023 |
| NORTH CAROLINA PROFESSIONAL SEAL 018981 ENGINEER R. K. MURPHY, JR. | NORTH CAROLINA PROFESSIONAL SEAL 15833 ENGINEER JERRY L. LINDSEY |
| DocuSigned by: R. K. Murphy, Jr. | DocuSigned by: Jerry L. Lindsey |

**DOCUMENT NOT CONSIDERED FINAL UNLESS ALL SIGNATURES COMPLETED**

# PIPE SECTION

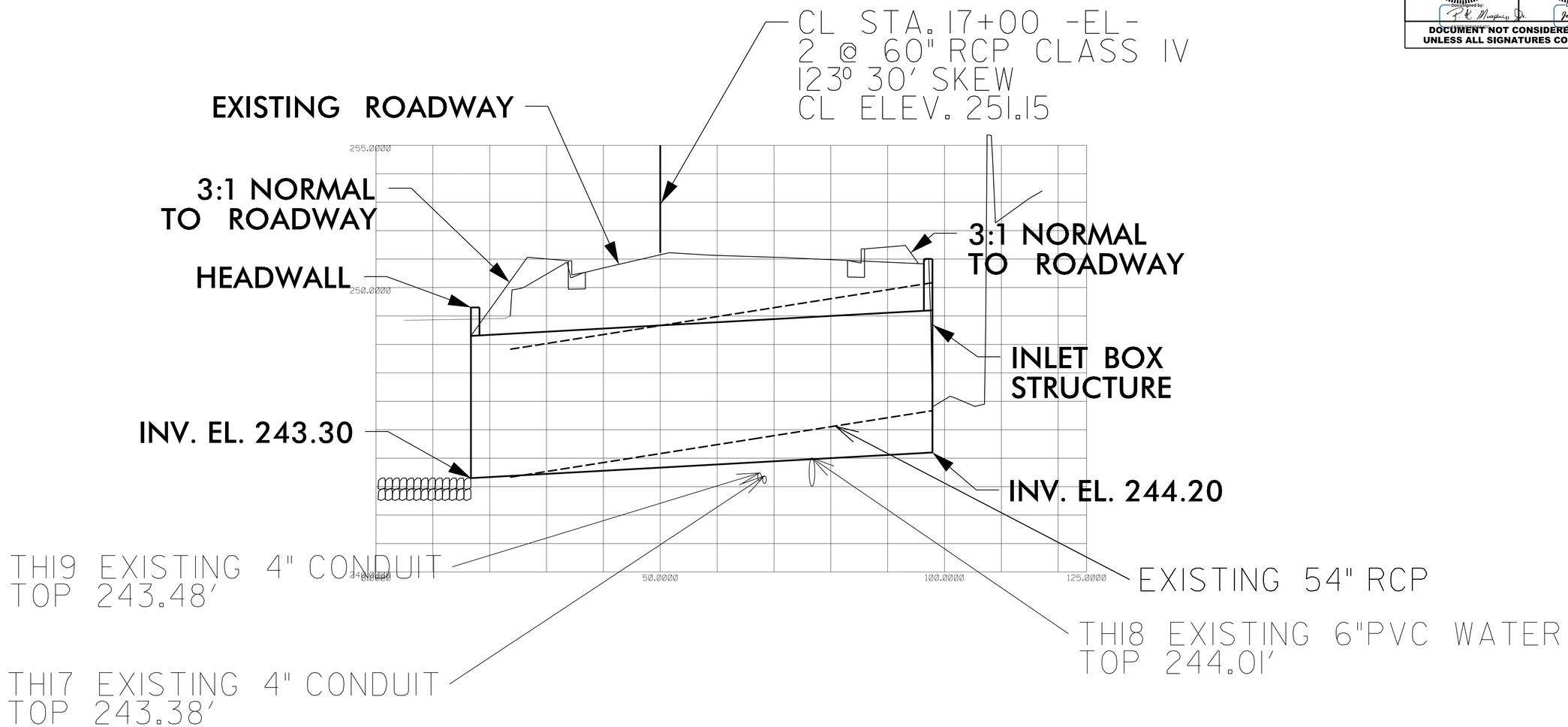


***SCALE:***
***1" = 10' VERT.***
***1" = 50' HORIZ.***

***1. PRATT ST.***

***49218.1***

***FORT LIBERTY RESURFACING***

11/28/2023
49218.1 Pratt_Rdy_PSH 09.dgn
USER: kcarroll

DocuSign Envelope ID: D504C274-BCF6-491D-899B-022F8944435A

STATE OF NORTH CAROLINA
DIVISION OF HIGHWAYS

# TRANSPORTATION MANAGEMENT PLAN

# CUMBERLAND COUNTY

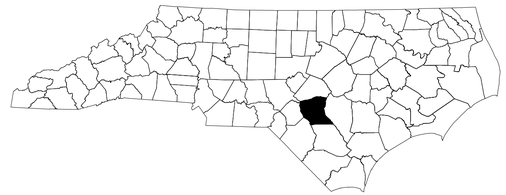

## INDEX OF SHEETS


| SHEET NO. | TITLE |
|---|---|
| TMP-01 | TITLE SHEET, VICINITY MAP, AND INDEX OF SHEETS |
| TMP-01A | LIST OF APPLICABLE ROADWAY STANDARD DRAWINGS, AND LEGEND |
| TMP-01B | SIGN AND DEVICE LEGEND |
| TMP-02 | TRANSPORTATION OPERATIONS PLAN: (MANAGEMENT STRATEGIES AND GENERAL NOTES) AND PHASING |
| TMP-03 | SPECIAL SIGN DESIGN |
| TMP-04 | OFFSITE DETOUR |


SHEET NO.
TMP-01

49218.1

TIP PROJECT:

**DOCUMENT NOT CONSIDERED FINAL UNLESS ALL SIGNATURES COMPLETED**

WORK ZONE SAFETY & MOBILITY
"from the MOUNTAINS to the COAST"


*PLANS PREPARED BY:*

R.K. MURPHY, P.E.

D. ALLEN HAYES, E.I.

*NCDOT CONTACTS:*

D. A. PARKER, P.E.
*PROJECT ENGINEER*

SPENCER JENNINGS
*PROJECT DESIGN ENGINEER*

WETHERILL ENGINEERING
1223 Jones Franklin Rd.
Raleigh, N.C. 27606
License No. F-0377
Bus: 919 851 8077
Fax: 919 851 8107

TRANSPORTATION PLANNING/DESIGN - BRIDGE/STRUCTURE DESIGN
CIVIL/SITE DESIGN - GIS/GPS - CONSTRUCTION OBSERVATION


*APPROVED:* DocuSigned by: R.K. Murphy Jr. 687DF3E849AF42C...

*DATE:* 8/10/2023

*SEAL*

NORTH CAROLINA PROFESSIONAL SEAL 018981 ENGINEER R.K. MURPHY JR.

8/10/2023
P:\2020\20135.01Div 6 Ft. Bragg C+\Traffic\Traffic Design\Design\Pre-Let\Plan\WZTC\Sheets (Pratt)\49218.1_TMP_01 Title.dgn
User:AHayes

DocuSign Envelope ID: D504C274-BCF6-491D-899B-022F8944435A

| PROJ. REFERENCE NO. | SHEET NO. |
|---|---|
| 49218.1 | TMP-01A |

## ROADWAY STANDARD DRAWINGS

THE FOLLOWING ROADWAY STANDARDS AS SHOWN IN "ROADWAY STANDARD DRAWINGS" - N.C. DEPARTMENT OF TRANSPORTATION - RALEIGH, N.C., DATED JANUARY 2018 ARE APPLICABLE TO THIS PROJECT AND BY REFERENCE HEREBY ARE CONSIDERED A PART OF THESE PLANS:

| STD. NO. | TITLE |
|---|---|
| 1101.03 | TEMPORARY ROAD CLOSURES |
| 1110.01 | STATIONARY WORK ZONE SIGNS |
| 1145.01 | BARRICADES |

## LEGEND

### GENERAL

NORTH ARROW

### TRAFFIC CONTROL DEVICES

BARRICADE (TYPE III)

### TEMPORARY SIGNING

STATIONARY SIGN

WETHERILL ENGINEERING
1223 Jones Franklin Rd.
Raleigh, N.C. 27606
License No. F-0377
Bus: 919 851 8077
Fax: 919 851 8107
TRANSPORTATION PLANNING/DESIGN - BRIDGE/STRUCTURE DESIGN
CIVIL/SITE DESIGN - GIS/GPS - CONSTRUCTION OBSERVATION

APPROVED: DocuSigned by: F. K. Murphy, Jr. 687DF3E849AF42C...

DATE: 8/10/2023

NORTH CAROLINA PROFESSIONAL SEAL 018981 ENGINEER K. K. MURPHY, JR.

**DOCUMENT NOT CONSIDERED FINAL UNLESS ALL SIGNATURES COMPLETED**

DIVISION OF HIGHWAYS · STATE OF NORTH CAROLINA · DEPARTMENT OF TRANSPORTATION · WORK ZONE TRAFFIC CONTROL

LIST OF APPLICABLE ROADWAY STANDARD DRAWINGS, AND LEGEND

8/10/2023
P:\2020\20135.01Div 6 Ft. Bragg C-\Traffic\Traffic Design\Design\Pre-Let\Plan\WZTC\Sheets (Pratt)\49218_TMP_01A Legend.dgn
User:AHayes

DocuSign Envelope ID: D504C274-BCF6-491D-899B-022F8944435A

| PROJ. REFERENCE NO. | SHEET NO. |
|---|---|
| 49218.1 | TMP-01B |

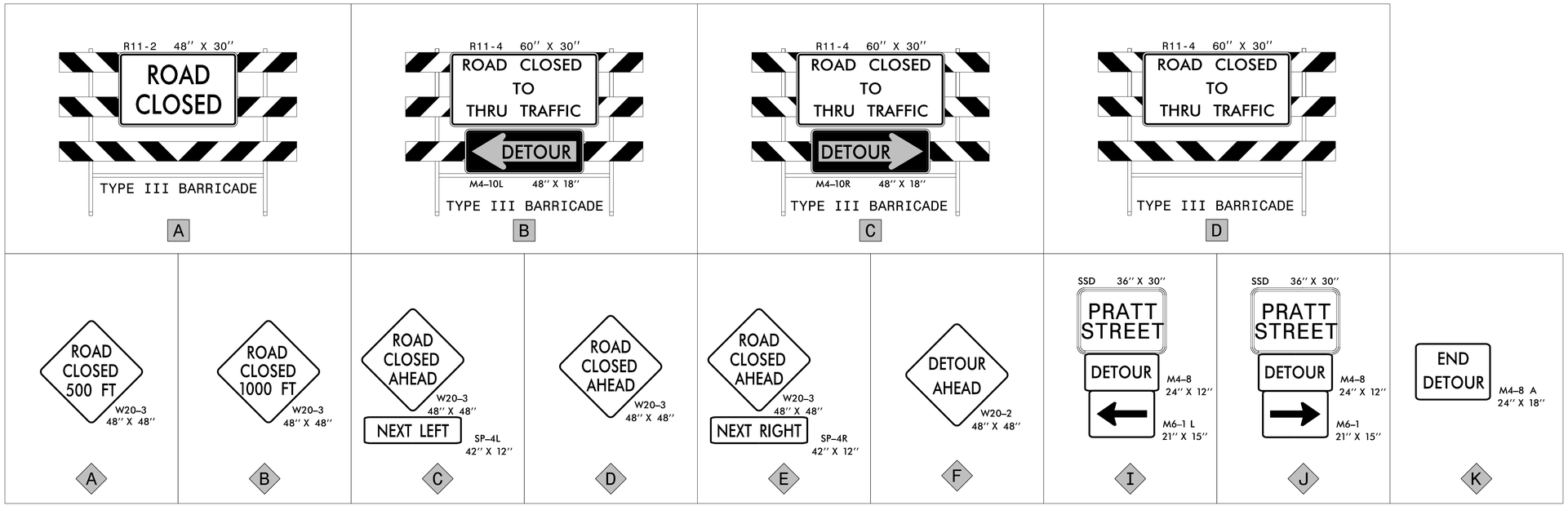


X BARRICADES
-WITH MOUNTED SIGNING

X SIGNING
-STATIONARY MOUNTED

WETHERILL ENGINEERING
1223 Jones Franklin Rd.
Raleigh, N.C. 27606
License No. F-0377
Bus: 919 851 8077
Fax: 919 851 8107
TRANSPORTATION PLANNING/DESIGN - BRIDGE/STRUCTURE DESIGN
CIVIL/SITE DESIGN - GIS/GPS - CONSTRUCTION OBSERVATION

APPROVED: DocuSigned by: F. K. Murphy Jr. 687DF3E849AF42C...
DATE: 8/10/2023

NORTH CAROLINA PROFESSIONAL SEAL 018981 ENGINEER K. K. MURPHY JR.

**DOCUMENT NOT CONSIDERED FINAL UNLESS ALL SIGNATURES COMPLETED**

DIVISION OF HIGHWAYS · STATE OF NORTH CAROLINA · DEPARTMENT OF TRANSPORTATION · WORK ZONE TRAFFIC CONTROL

SIGN AND DEVICE LEGEND

8/10/2023
P:\2020\20135.01Div 6 Ft. Bragg C-\Traffic\Traffic Design\Design\Pre-Let\Plan\WZTC\Sheets (Pratt)\49218_TMP_01B SDL.dgn
User:AHayes

DocuSign Envelope ID: D504C274-BCF6-491D-899B-022F8944435A

| PROJ. REFERENCE NO. | SHEET NO. |
|---|---|
| 49218.1 | TMP-02 |

# GENERAL NOTES

CHANGES MAY BE REQUIRED WHEN PHYSICAL DIMENSIONS IN THE DETAIL DRAWINGS, STANDARD DETAILS, AND ROADWAY DETAILS ARE NOT ATTAINABLE TO MEET FIELD CONDITIONS OR RESULT IN DUPLICATE OR UNDESIRED OVERLAPPING OF DEVICES. MODIFICATION MAY INCLUDE: MOVING, SUPPLEMENTING, COVERING, OR REMOVAL OF DEVICES AS DIRECTED BY THE ENGINEER.

THE FOLLOWING GENERAL NOTES APPLY AT ALL TIMES FOR THE DURATION OF THE CONSTRUCTION PROJECT EXCEPT WHEN OTHERWISE NOTED IN THE PLAN OR DIRECTED BY THE ENGINEER.

TRAFFIC PATTERN ALTERATIONS

A) NOTIFY THE ENGINEER THIRTY (30) CALENDAR DAYS PRIOR TO ANY TRAFFIC PATTERN ALTERATION.

SIGNING

B) PROVIDE SIGNING AND DEVICES REQUIRED TO CLOSE THE ROAD ACCORDING TO THE ROADWAY STANDARD DRAWINGS AND TRAFFIC CONTROL PLANS.

AND

PROVIDE SIGNING REQUIRED FOR THE OFF-SITE DETOUR ROUTE AS SHOWN IN THE TRAFFIC CONTROL PLANS.

C) COVER OR REMOVE ALL SIGNS AND DEVICES REQUIRED TO CLOSE THE ROAD WHEN ROAD CLOSURE IS NOT IN OPERATION.

AND

COVER OR REMOVE ALL SIGNS REQUIRED FOR THE OFF-SITE DETOUR WHEN THE DETOUR IS NOT IN OPERATION.

D) ENSURE ALL NECESSARY SIGNING IS IN PLACE PRIOR TO ALTERING ANY TRAFFIC PATTERN.

TRAFFIC CONTROL DEVICES

E) PLACE TYPE III BARRICADES, WITH "ROAD CLOSED" SIGN R11-2 ATTACHED, OF SUFFICIENT LENGTH TO CLOSE ENTIRE ROADWAY.

# MANAGEMENT STRATEGIES

THE FOLLOWING LISTED WORK ZONE STRATEGIES ARE RECOMMENDED FOR INCLUSION WITHIN THIS TRANSPORTATION MANAGEMENT PLAN (TMP).

RECOMMENDED STRATEGIES:

TRAFFIC MANAGEMENT STRATEGIES:
OFF-SITE DETOURS

# PHASING

STEP 1) INSTALL ALL OFFSITE DETOUR SIGNING AND ROAD CLOSURE SIGNING. COVER SIGNS USING AN APPROVED METHOD PER THE DISCRETION OF THE ENGINEER. [SEE SHEETS TMP-01B & 04]

STEP 2) WHEN READY TO CLOSE THE ROADWAY, UNCOVER THE DETOUR AND ROAD CLOSURE SIGNING, CLOSE -L- (PRATT RD.), AND DETOUR TRAFFIC. [SEE SHEETS TMP-01B & 04]

NOTE: STEPS 3 AND 4 MAY BE PERFORMED SIMULTANEOUSLY.

THE CONTRACTOR SHALL WORK IN A CONTINUOUS MANNER TO COMPLETE THE WORK IN STEP 3 IN 9 WEEKS. SEE INTERMEDIATE CONTRACT TIME AND LIQUIDATED DAMAGES.

STEP 3) AWAY FROM TRAFFIC, REMOVE EXISTING PIPES AND INSTALL PROPOSED 60" PIPES. [SEE ROADWAY PLANS]

THE CONTRACTOR SHALL WORK IN A CONTINUOUS MANNER TO COMPLETE THE WORK IN STEP 4 IN 9 WEEKS. SEE INTERMEDIATE CONTRACT TIME AND LIQUIDATED DAMAGES.

STEP 4) AWAY FROM TRAFFIC, MILL AND RESURFACE THE EXISTING ROADWAY, RETURNING THE ROADWAY TO THE EXISTING ELEVATION, INCLUDING FINAL PAVEMENT MARKINGS.
[SEE ROADWAY PLANS AND FINAL PAVEMENT MARKING PLAN]

STEP 5) OPEN -L- TO THE FINAL TRAFFIC PATTERN, AND REMOVE ALL ROAD CLOSURE SIGNING, OFFSITE DETOUR SIGNING, TEMPORARY TRANSPORATION MANAGEMENT DEVICES.
[SEE SHEET TMP-04 FOR SIGN LOCATIONS]

WETHERILL ENGINEERING
1223 Jones Franklin Rd.
Raleigh, N.C. 27606
License No. F-0377
Bus: 919 851 8077
Fax: 919 851 8107
TRANSPORTATION PLANNING/DESIGN - BRIDGE/STRUCTURE DESIGN
CIVIL/SITE DESIGN - GIS/GPS - CONSTRUCTION OBSERVATION

APPROVED: DocuSigned by: F. K. Murphy Jr. 687DF3E849AF42C...
DATE: 8/10/2023

NORTH CAROLINA PROFESSIONAL SEAL 018981 ENGINEER K. K. MURPHY, JR.

**DOCUMENT NOT CONSIDERED FINAL UNLESS ALL SIGNATURES COMPLETED**

DIVISION OF HIGHWAYS · STATE OF NORTH CAROLINA · DEPARTMENT OF TRANSPORTATION · WORK ZONE TRAFFIC CONTROL

TRANSPORTATION OPERATIONS PLAN: (MANAGEMENT STRATEGIES AND GENERAL NOTES) AND PHASING

8/10/2023
P:\2020\20135.01Div 6 Ft. Bragg C-\Traffic\Traffic Design\Design\Pre-Let\Plan\WZTC\Sheets (Pratt)\49218.1_TMP_02 GN&P.dgn
User:AHayes

DocuSign Envelope ID: D504C274-BCF6-491D-899B-022F8944435A

| PROJ. REFERENCE NO. | SHEET NO. |
|---|---|
| 49218.1 | TMP-03 |

SIGN NUMBER: name
TYPE: STATIONARY
QUANTITY: SEE PLANS

SIGN WIDTH: 3'-0"
HEIGHT: 2'-6"
TOTAL AREA: 7.5 Sq.Ft.

BORDER TYPE: INSET
RECESS: 0.38"
WIDTH: 0.63"
RADII: 1.5"

NO. Z BARS:
LENGTH:

BACKG COLOR: Fluorescent Orange
COPY COLOR: Black

| SYMBOL | X | Y | WID | HT |
|---|---|---|---|---|
| | | | | |
| | | | | |
| | | | | |
| | | | | |
| | | | | |
| | | | | |
| | | | | |

MAT'L: 0.080" (2.0 mm) ALUMINUM

DESIGN BY: DAH
PROJECT ID: 49218.1
CHECKED BY: WEI
LOCATION: OFFSITE DETOUR
Sep 29, 2022
DIV: 6

USE NOTES: 1,2

1. Legend and border shall be direct applied black non-reflective sheeting.
2. Background shall be NC GRADE B fluorescent orange retroreflective sheeting.

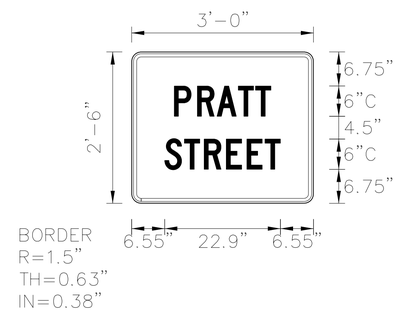


Spacing Factor is 1 unless specified otherwise

LETTER POSITIONS

Letter locations are panel edge to lower left corner

| | | | | | | | Series/Size Text Length |
|---|---|---|---|---|---|---|---|
| | P | R | A | T | T | | C 2000 |
| | 8.4 | 13 | 16.9 | 21.1 | 24.5 | | 19.1 |
| | S | T | R | E | E | T | C 2000 |
| | 6.5 | 10.4 | 14.3 | 18.7 | 22.8 | 26.4 | 22.9 |

FILENAME: Div6FtBraggC+_REF_BSSD PRATT

NORTH CAROLINA D.O.T. SIGN DETAIL

ETHERILL ENGINEERING
1223 Jones Franklin Rd.
Raleigh, N.C. 27606
License No. F-0377
Bus: 919 851 8077
Fax: 919 851 8107
TRANSPORTATION PLANNING/DESIGN - BRIDGE/STRUCTURE DESIGN
CIVIL/SITE DESIGN - GIS/GPS - CONSTRUCTION OBSERVATION

APPROVED: DocuSigned by: R.K. Murphy, Jr. 687DF3E849AF42C...
DATE: 8/10/2023

NORTH CAROLINA PROFESSIONAL SEAL 018981 ENGINEER R.K. MURPHY, JR.

DOCUMENT NOT CONSIDERED FINAL UNLESS ALL SIGNATURES COMPLETED

DIVISION OF HIGHWAYS · STATE OF NORTH CAROLINA · DEPARTMENT OF TRANSPORTATION · WORK ZONE TRAFFIC CONTROL

SPECIAL SIGN DESIGN

8/10/2023
P:\2021\2135.01\Div 6 Ft. Bragg C+\Traffic\Traffic Design\Design\Pre-Let\Plan\WZTC\Sheets (Pratt)\49218.1_TMP_03 SSD.dgn
User:AHayes

DocuSign Envelope ID: D504C274-BCF6-491D-899B-022F8944435A

| PROJ. REFERENCE NO. | SHEET NO. |
|---|---|
| 49218.1 | TMP-04 |

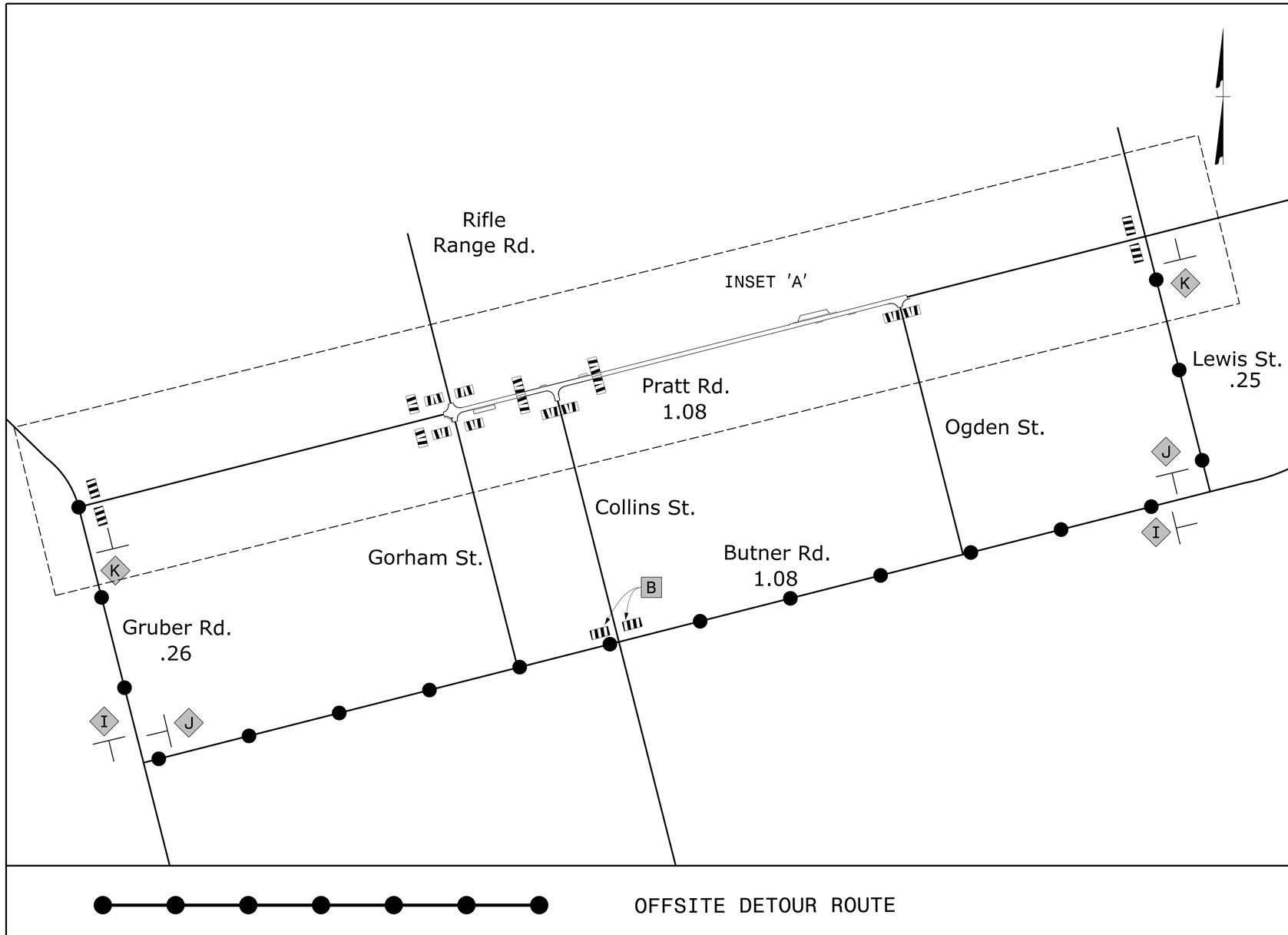


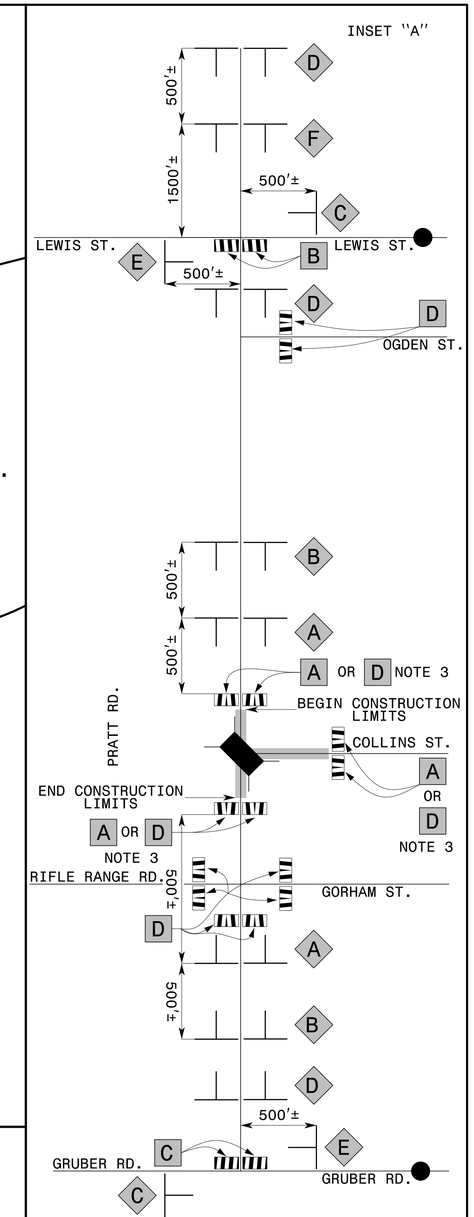


NOTES:
1) REFER TO SHEET TMP-01B FOR SIGN AND DEVICE LEGEND.
2) FOR INSET "A", REFER TO ROADWAY STANDARD DRAWINGS 1101.03, SHEETS 1 & 2 OF 9 FOR APPLICABLE NOTES.
3) USE BARRICADE 'A' FOR STEP 3. USE BARRICADE 'D' FOR STEP 4.

WETHERILL ENGINEERING
1223 Jones Franklin Rd.
Raleigh, N.C. 27606
License No. F-0377
Bus: 919 851 8077
Fax: 919 851 8107
TRANSPORTATION PLANNING/DESIGN - BRIDGE/STRUCTURE DESIGN
CIVIL/SITE DESIGN - GIS/GPS - CONSTRUCTION OBSERVATION

APPROVED: DocuSigned by: R. K. Murphy, Jr. 687DF3E849AF42C...
DATE: 8/10/2023

NORTH CAROLINA PROFESSIONAL SEAL 018981 ENGINEER R. K. MURPHY, JR.

DOCUMENT NOT CONSIDERED FINAL UNLESS ALL SIGNATURES COMPLETED

DIVISION OF HIGHWAYS · STATE OF NORTH CAROLINA · DEPARTMENT OF TRANSPORTATION · WORK ZONE TRAFFIC CONTROL

OFFSITE DETOUR

8/10/2023
P:\2020\20135.01Div 6 Ft. Bragg C+\Traffic\Traffic Design\Design\Pre-Let\Plan\WZTC\Sheets (Pratt)\49218_TMP_04 OSD.dgn
User:AHayes

DocuSign Envelope ID: D504C274-BCF6-491D-899B-022F8944435A

| TIP NO. | SHEET NO. |
|---|---|
| 49218.1 | PMP-01 |

APPROVED: DocuSigned by: K. Murphy Jr. 687DF3E849AF42C...

DATE: 8/10/2023

SEAL

NORTH CAROLINA PROFESSIONAL SEAL 018981 ENGINEER K. MURPHY JR.

**DOCUMENT NOT CONSIDERED FINAL UNLESS ALL SIGNATURES COMPLETED**

# STATE OF NORTH CAROLINA
# DEPARTMENT OF TRANSPORTATION

# PAVEMENT MARKING PLAN
## CUMBERLAND COUNTY

T.I.P.: 49218.1

CONTRACT: N/A

## INDEX


| SHEET NO. | DESCRIPTION |
|---|---|
| PMP-01 | PAVEMENT MARKING PLAN TITLE AND SCHEDULE SHEET |
| PMP-02 | PAVEMENT MARKING DETAIL |


## ROADWAY STANDARD DRAWING

THE FOLLOWING ROADWAY STANDARDS AS APPEAR IN "ROADWAY STANDARD DRAWINGS" - PROJECT SERVICES UNIT - N.C. DEPARTMENT OF TRANSPORTATION - RALEIGH, N.C., DATED JANUARY 2018 ARE APPLICABLE TO THIS PROJECT AND BY REFERENCE HEREBY ARE CONSIDERED A PART OF THESE PLANS:

| STD. NO. | TITLE |
|---|---|
| 1205.01 | PAVEMENT MARKINGS - LINE TYPES AND OFFSETS |
| 1205.02 | PAVEMENT MARKINGS - TWO-LANE AND MULTILANE ROADWAYS |
| 1205.04 | PAVEMENT MARKINGS - INTERSECTIONS |
| 1250.01 | RAISED PAVEMENT MARKERS - INSTALLATION SPACING |
| 1251.01 | RAISED PAVEMENT MARKERS - PERMANENT AND TEMPORARY |

## FINAL PAVEMENT MARKING SCHEDULE

| SYMBOL | DESCRIPTION | PAY ITEM |
|---|---|---|
| T13 | YELLOW DOUBLE CENTER | THERMOPLASTIC (4", 90 MIL) |
| T61 | WHITE STOP BAR | THERMOPLASTIC (24", 90 MIL) |

## GENERAL NOTES

THE FOLLOWING GENERAL NOTES APPLY AT ALL TIMES FOR THE DURATION OF THE CONSTRUCTION PROJECT, EXCEPT WHEN OTHERWISE NOTED IN THE PLAN, OR DIRECTED BY THE ENGINEER.

A) INSTALL PAVEMENT MARKINGS AND PAVEMENT MARKERS ON THE FINAL SURFACE AS FOLLOWS:

| ROAD NAME | MARKING | MARKER |
|---|---|---|
| ALL ROADS | THERMOPLASTIC | RAISED |

B) TIE PROPOSED PAVEMENT MARKING LINES TO EXISTING PAVEMENT MARKING LINES.

C) REMOVE/REPLACE ANY CONFLICTING/DAMAGED PAVEMENT MARKINGS AND MARKERS.

D) PASSING ZONES WILL BE DETERMINED IN THE FIELD AND MUST BE APPROVED BY THE ENGINEER.

E) STOP BAR LOCATION AT NON-SIGNALIZED INTERSECTIONS MAY BE ADJUSTED AS DIRECTED BY THE ENGINEER.

F) UNLESS OTHERWISE SPECIFIED, HEATED-IN-PLACE THERMOPLASTIC MAY BE USED IN LIEU LIEU OF EXTRUDED THERMOPLASTIC FOR STOP BARS, SYMBOLS, CHARACTERS AND DIAGONALS. IF HEATED-IN-PLACE IS USED, IT SHALL BE PAID FOR USING THE EXTRUDED THERMOPLASTIC PAY ITEM.

G) SEE ROADWAY PLANS FOR ALTERNATE CURB RAMP DESIGNS WHEN INDICATED ON PAVEMENT MARKING DETAIL SHEETS.

H) ALL STATION ARE CONSIDERED +/- UNLESS OTHERWISE SHOWN ON THE PLANS.

*PLAN SUBMITTED TO:*

*Ayman I. Alqudwah, P.E., Signing and Delineation Regional Engineer*

STATE OF NORTH CAROLINA DEPARTMENT OF TRANSPORTATION


*PLAN PREPARED BY: Wetherill Engineering, Inc.*

*KEN MURPHY, P.E.* PROJECT MANAGER

*D. ALLEN HAYES, E.I.* TRAFFIC DESIGN ENGINEER

WETHERILL ENGINEERING

1223 Jones Franklin Rd.
Raleigh, N.C. 27606
License No. F-0377
Bus: 919 851 8077
Fax: 919 851 8107

TRANSPORTATION PLANNING/DESIGN - BRIDGE/STRUCTURE DESIGN
CIVIL/SITE DESIGN - GIS/GPS - CONSTRUCTION OBSERVATION


8/10/2023
R:\2021\2035.01\Div 6 Ft.Bragg C+\Traffic\Traffic Design\Design\Pre-Let\Plan\Pavement Markings\SHEETS (PRATT)\49218.1_PMP_01Title.dgn
User:AHayes

DocuSign Envelope ID: D504C274-BCF6-491D-899B-022F8944435A

| TIP NO. | SHEET NO. |
|---|---|
| 49218.1 | PMP-02 |

APPROVED: DocuSigned by: R. K. Murphy, Jr. 687DF3E849AF42C...

DATE: 8/10/2023

SEAL

NORTH CAROLINA PROFESSIONAL SEAL 018981 ENGINEER R. K. MURPHY, JR.

**DOCUMENT NOT CONSIDERED FINAL UNLESS ALL SIGNATURES COMPLETED**

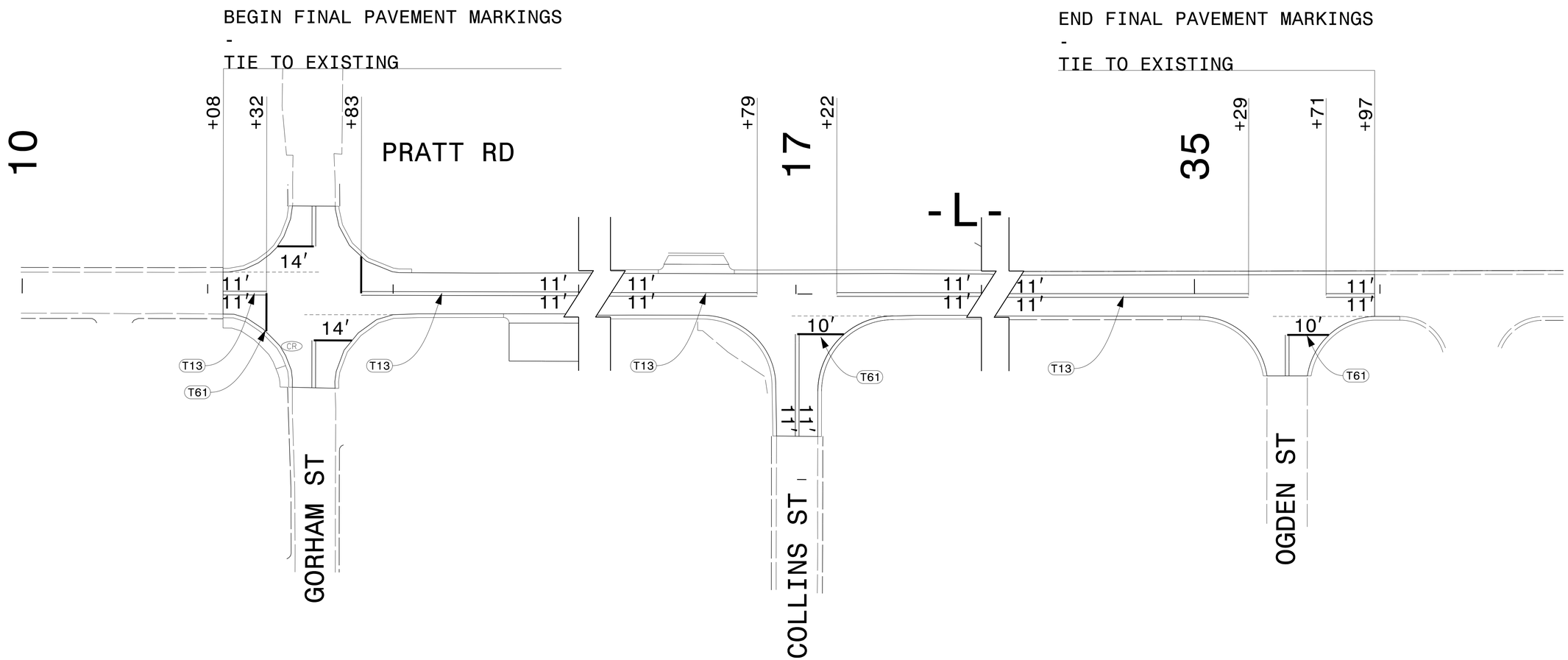


WETHERILL ENGINEERING
1223 Jones Franklin Rd.
Raleigh, N.C. 27606
License No. F-0377
Bus: 919 851 8077
Fax: 919 851 8107
TRANSPORTATION PLANNING/DESIGN - BRIDGE/STRUCTURE DESIGN
CIVIL/SITE DESIGN - GIS/GPS - CONSTRUCTION OBSERVATION

# PAVEMENT MARKING DETAIL

8/10/2023
R:\20120035.01Div 6 Ft. Bragg C+\Traffic\Traffic Design\Design\Pre-Let\Plan\Pavement Markings\SHEETS (PRATT)\49218_PMP_02 DTL.dgn
User:AHoyes

TIP PROJECT: 49218.1

See Sheet 1A For Index of Sheets
See Sheet 1B For Symbols Sheet

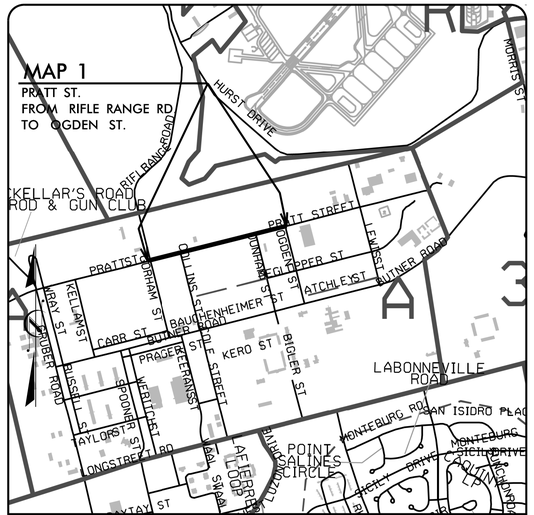


(NOT TO SCALE)

VICINITY MAP

# STATE OF NORTH CAROLINA
# DIVISION OF HIGHWAYS

## PLAN FOR PROPOSED
## HIGHWAY EROSION CONTROL

# *CUMBERLAND COUNTY*

| STATE | STATE PROJECT REFERENCE NO. | SHEET NO. | TOTAL SHEETS |
|---|---|---|---|
| N.C. | 49218.1 | EC-1 | |

| STATE PROJ. NO. | F. A. PROJ. NO. | DESCRIPTION |
|---|---|---|
| | | |
| | | |
| | | |
| | | |
| | | |

***LOCATION:*** ***PRATT STREET AT RIFLE RANGE ROAD/ GORHAM STREET TO OGDEN STREET.***

***TYPE OF WORK:*** ***RESURFACING, PAVEMENT REHABILITATION, MILLING GRADING, DRAINAGE IMPROVEMENTS, SIDEWALK, CURB AND GUTTER, ADA RAMP, AND PAVEMENT MARKINGS***

NC GRID NAD 83 NA 2011

### EROSION AND SEDIMENT CONTROL MEASURES

| Std. # | Description | Symbol |
|---|---|---|
| 1630.03 | Temporary Silt Ditch | TSD |
| 1630.05 | Temporary Diversion | TD |
| 1605.01 | Temporary Silt Fence | |
| 1606.01 | Special Sediment Control Fence | |
| 1622.01 | Temporary Berms and Slope Drains | |
| 1630.02 | Silt Basin Type B | |
| 1633.01 | Temporary Rock Silt Check Type-A | |
| | Temporary Rock Silt Check Type-A with Matting and Polyacrylamide (PAM) | |
| 1633.02 | Temporary Rock Silt Check Type-B | |
| | Wattle / Coir Fiber Wattle | 8" 12" |
| | Wattle / Coir Fiber Wattle with Polyacrylamide (PAM) | |
| 1634.01 | Temporary Rock Sediment Dam Type-A | |
| 1634.02 | Temporary Rock Sediment Dam Type-B | |
| 1635.01 | Rock Pipe Inlet Sediment Trap Type-A | |
| 1635.02 | Rock Pipe Inlet Sediment Trap Type-B | |
| 1630.04 | Stilling Basin | |
| 1630.06 | Special Stilling Basin | |
| | Rock Inlet Sediment Trap: | |
| 1632.01 | Type A | A |
| 1632.02 | Type B | B |
| 1632.03 | Type C | C |
| | Skimmer Basin | |
| | Tiered Skimmer Basin | |
| | Infiltration Basin | |

## MAP 1 – PRATT STREET

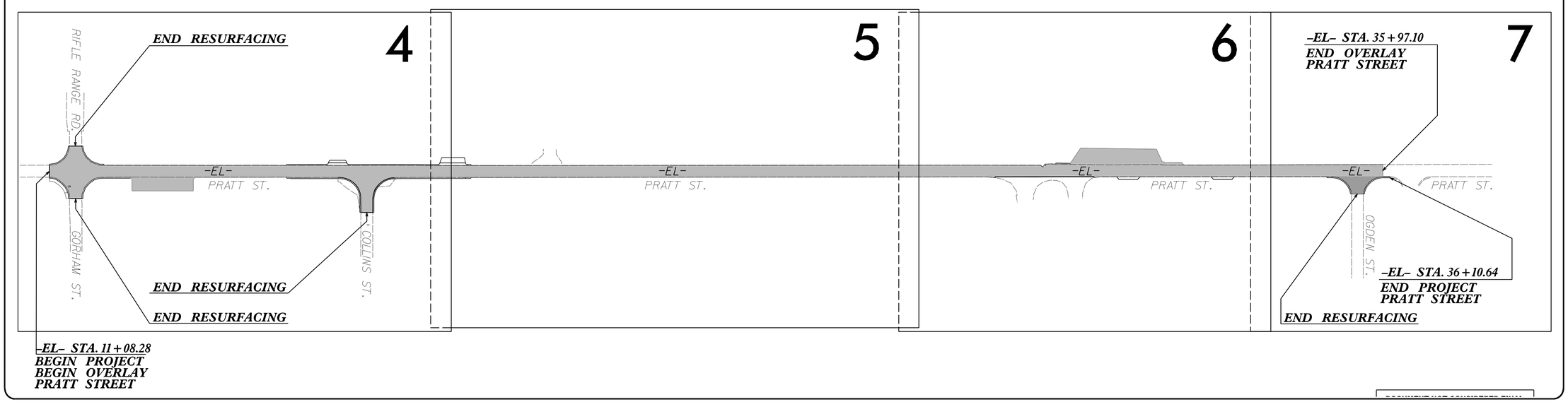


***GRAPHIC SCALE***

50 25 0 50 100

PLANS

***THESE EROSION AND SEDIMENT CONTROL PLANS COMPLY WITH THE APPLICABLE REGULATIONS SET FORTH BY THE NCG-010000 GENERAL CONSTRUCTION PERMIT EFFECTIVE APRIL 1, 2019 AND ISSUED BY THE NORTH CAROLINA DEPARTMENT OF ENVIRONMENTAL QUALITY DIVISION OF WATER RESOURCES.***


WETHERILL ENGINEERING

1223 JONES FRANKLIN ROAD
Raleigh, N.C. 27606
License No. F-0377
Bus: 919 851 8077
Fax: 919 851 8107

*Prepared in the Office of:*

***WETHERILL ENGINEERING, INC.***

*1223 JONES FRANKLIN ROAD*
*RALEIGH, NC 27606*

*Designed by:*

***KATIE ESTEP*** — ***4485***

*NAME* — *LEVEL III CERTIFICATION NO.*


**Roadway Standard Drawings**

**The following roadway english standards as appear in "Roadway Standard Drawings"– Roadway Design Unit – N. C. Department of Transportation – Raleigh, N. C., dated January 2018 and the latest revison thereto are applicable to this project and by reference hereby are considered a part of these plans.**

| | | | |
|---|---|---|---|
| 1604.01 | Railroad Erosion Control Detail | 1632.01 | Rock Inlet Sediment Trap Type A |
| 1605.01 | Temporary Silt Fence | 1632.02 | Rock Inlet Sediment Trap Type B |
| 1606.01 | Special Sediment Control Fence | 1632.03 | Rock Inlet Sediment Trap Type C |
| 1607.01 | Gravel Construction Entrance | 1633.01 | Temporary Rock Silt Check Type A |
| 1622.01 | Temporary Berms and Slope Drains | 1633.02 | Temporary Rock Silt Check Type B |
| 1630.01 | Riser Basin | 1634.01 | Temporary Rock Sediment Dam Type A |
| 1630.02 | Silt Basin Type B | 1634.02 | Temporary Rock Sediment Dam Type B |
| 1630.03 | Temporary Silt Ditch | 1635.01 | Rock Pipe Inlet Sediment Trap Type A |
| 1630.04 | Stilling Basin | 1635.02 | Rock Pipe Inlet Sediment Trap Type B |
| 1630.05 | Temporary Diversion | 1640.01 | Coir Fiber Baffle |
| 1630.06 | Special Stilling Basin | 1645.01 | Temporary Stream Crossing |
| 1631.01 | Matting Installation | | |


Div 6 Fx Regional Erosion Control\3rd Let\49218.1_Pratt_01_TSH.dgn
7/20/2023
12:08:15 PM
EDSEL ESTEP

| PROJECT REFERENCE NO. | SHEET NO. |
|---|---|
| 49218.1 | EC-2 |
| ROADWAY DESIGN ENGINEER | HYDRAULICS ENGINEER |

DIVISION OF HIGHWAYS
STATE OF NORTH CAROLINA

# SOIL STABILIZATION TIMEFRAMES

| SITE DESCRIPTION | STABILIZATION TIME | TIMEFRAME EXCEPTIONS |
|---|---|---|
| PERIMETER DIKES, SWALES, DITCHES AND SLOPES | 7 DAYS | NONE |
| HIGH QUALITY WATER (HQW) ZONES | 7 DAYS | NONE |
| SLOPES STEEPER THAN 3:1 | 7 DAYS | IF SLOPES ARE 10' OR LESS IN LENGTH AND ARE NOT STEEPER THAN 2:1, 14 DAYS ARE ALLOWED. |
| SLOPES 3:1 OR FLATTER | 14 DAYS | 7 DAYS FOR SLOPES GREATER THAN 50' IN LENGTH. |
| ALL OTHER AREAS WITH SLOPES FLATTER THAN 4:1 | 14 DAYS | NONE, EXCEPT FOR PERIMETERS AND HQW ZONES. |

| PROJECT REFERENCE NO. | SHEET NO. |
|---|---|
| 49218.1 | EC-3/CONSTR.4 |
| ROADWAY DESIGN ENGINEER | HYDRAULICS ENGINEER |

–EL– STA. 11+08.28

TIE TO NEW PAVEMENT JOINT
BEGIN PROJECT
BEGIN OVERLAY

1. CONTRACTOR TO COORDINATE WITH NEC AND SANDHILLLS TO AVOID CONFLICT WITH EXISTING U/G CABLES CROSSING PRATT STREET AND PROPOSED DRAINAGE/CATCH BASINS. ADJUST DRAINAGE PIPES OR CATCH BASINS TO AVOID CONFLICT WITH THE EXISTING U/G CABLES.

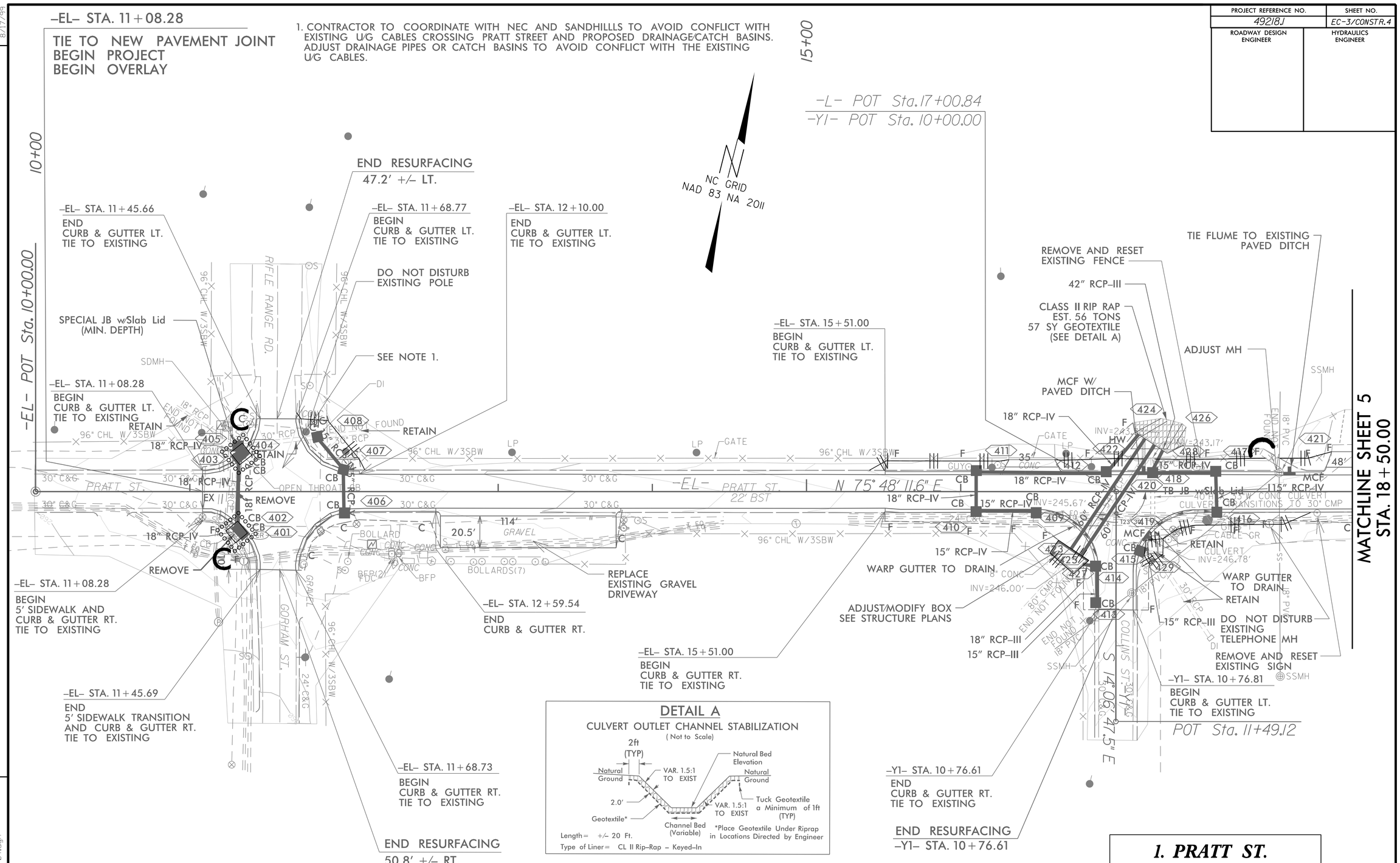


## DETAIL A

CULVERT OUTLET CHANNEL STABILIZATION
( Not to Scale)




Length = +/– 20 Ft.
Type of Liner = CL II Rip–Rap – Keyed–In

CLEARING AND GRUBBING
EROSION CONTROL FOR
CONSTRUCTION SHEET 4

NOTE:
PERIMETER EROSION CONTROL MEASURES SHALL BE INSTALLED DURING CLEARING AND GRUBBING PHASE.

| Point | North | East | Elevation |
|---|---|---|---|
| 1 | 511107.6510 | 1991394.0670 | 251.0470 |
| 2 | 511430.5800 | 1992659.7310 | 260.9710 |

**SCALE: 1"=30'**

**1. PRATT ST.**
**SITE 1**

**49218.1**
**FORT BRAGG RESURFACING**

8/17/99
7/21/2023
49218.1_Pratt_EC_CG.psh 04.dgn
USERKFeton

# STA. –EL– 17 + 00 PIPE CONSTRUCTION SEQUENCE

| PROJECT REFERENCE NO. | SHEET NO. |
|---|---|
| 49218.1 | EC-4/CONSTR.4 |
| R/W SHEET NO. | |
| ROADWAY DESIGN ENGINEER | HYDRAULICS ENGINEER |

## PHASE I

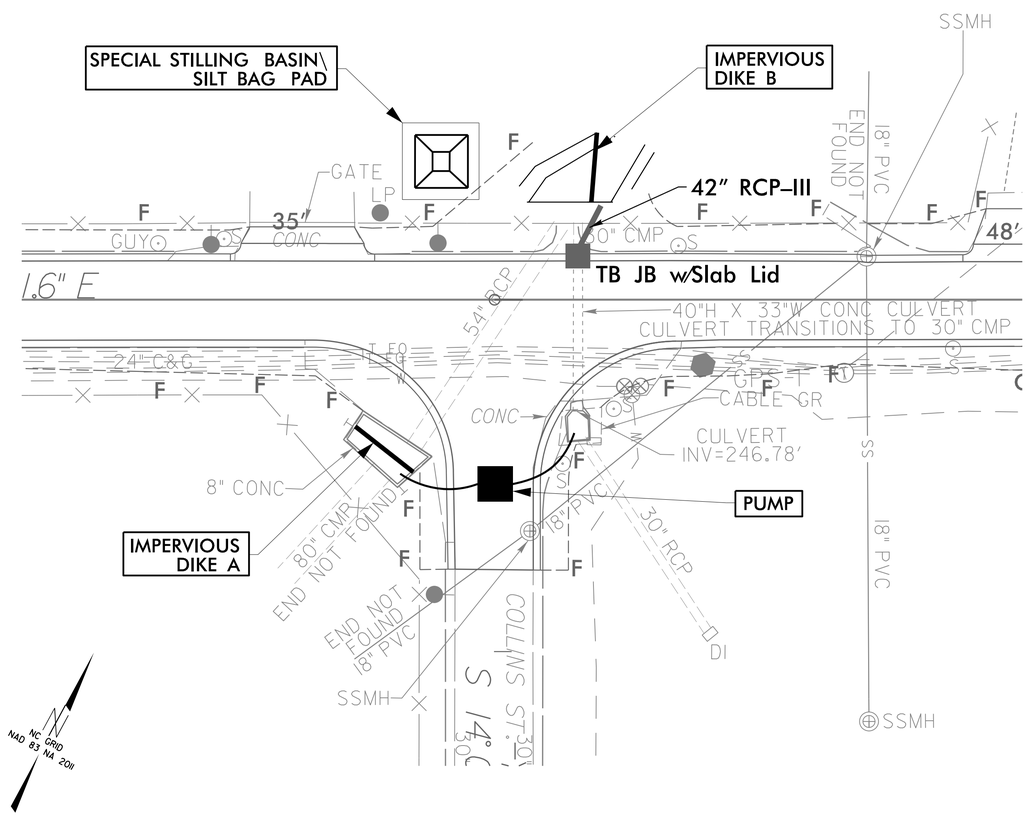


1. INSTALL SPECIAL STILLING BASIN AT OUTLET.

2. INSTALL JUNCTION BOX WITH SLAB LID AND 42" RCP–III AT THE OUTLET OF THE 40" X 33" CULVERT TRANSITIONING TO 30" CMP, REMOVING EXISTING PIPE LENGTH AS NECESSARY.

3. INSTALL IMPERVIOUS DIKES A AND B. IMPLEMENT TEMPORARY PUMP–AROUND TO DIVERT FLOW INTO EXISTING 40" X 33" CULVERT.

4. REMOVE EXISTING 54" PIPE. ALLOW THREE WEEKS FOR WATER UTILITY LINE RELOCATION.

## PHASE II

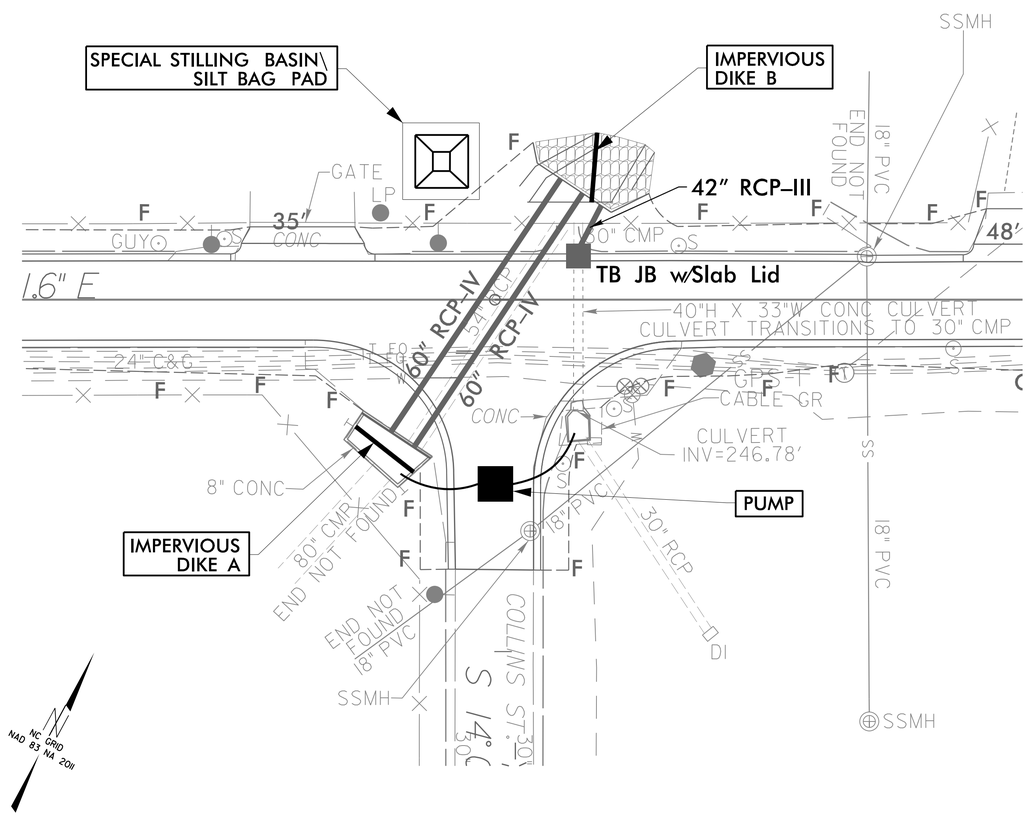


1. INSTALL BOTH 60" RCP–IV PIPES.

2. COMPLETE CHANNEL IMPROVEMENTS AT OUTLET, INSTALL HEADWALL AND RIPRAP.

3. REMOVE IMPERVIOUS DIKES, STILLING BASIN, AND TEMPORARY PUMP AROUND. RETURN FLOW.

| PROJECT REFERENCE NO. | SHEET NO. |
|---|---|
| 49218.1 | EC-5/CONSTR.5 |

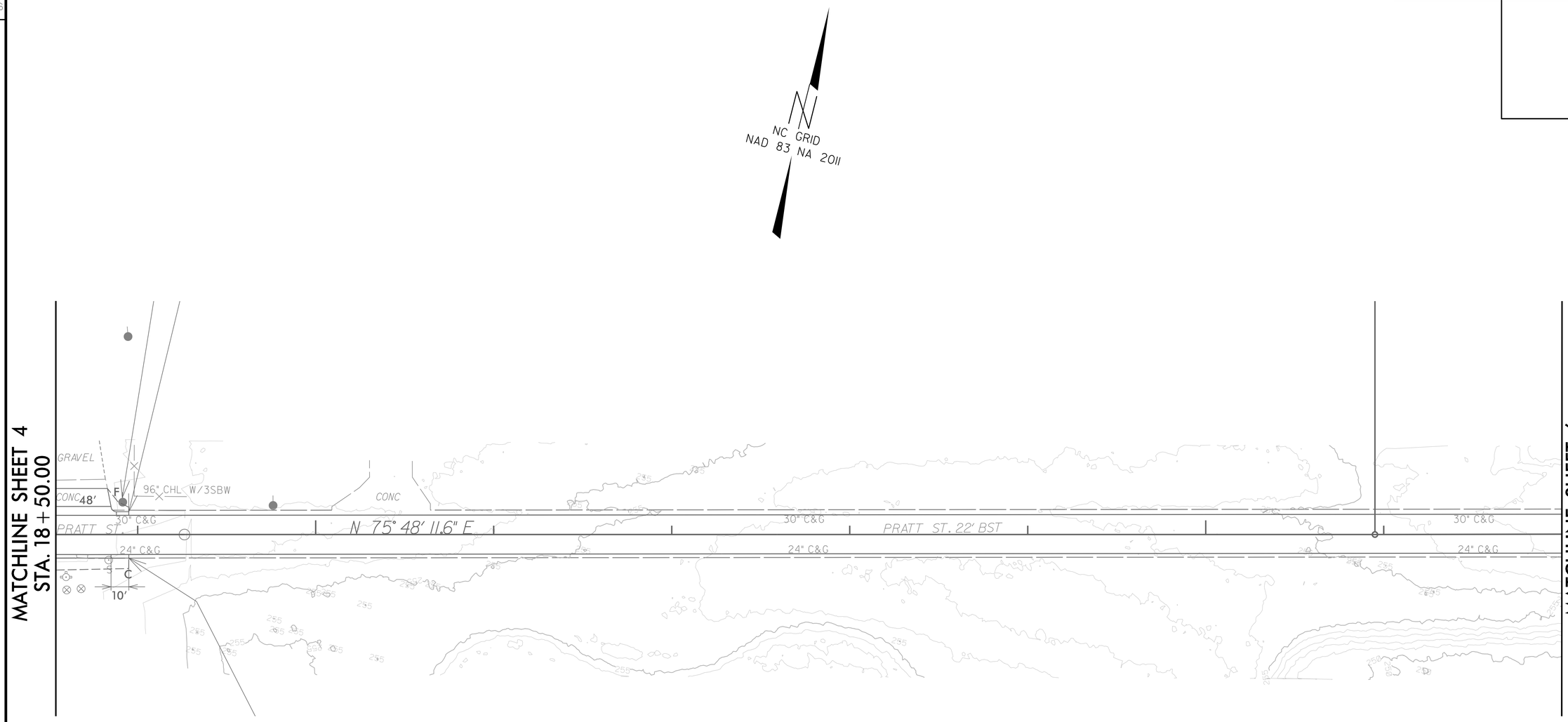


CLEARING AND GRUBBING
EROSION CONTROL FOR
CONSTRUCTION SHEET 5

NOTE:
PERIMETER EROSION CONTROL MEASURES SHALL BE INSTALLED DURING CLEARING AND GRUBBING PHASE.

**SCALE: 1"=30'**

**1. PRATT ST.**
**SITE 1**

**49218.1**

**FORT BRAGG RESURFACING**

8/17/99

7/20/2023
49218.1_Pratt_EC_CG.psh 05.dgn
USERKESTEN

| PROJECT REFERENCE NO. | SHEET NO. |
|---|---|
| 49218.1 | EC-6/CONSTR.6 |
| ROADWAY DESIGN ENGINEER | HYDRAULICS ENGINEER |

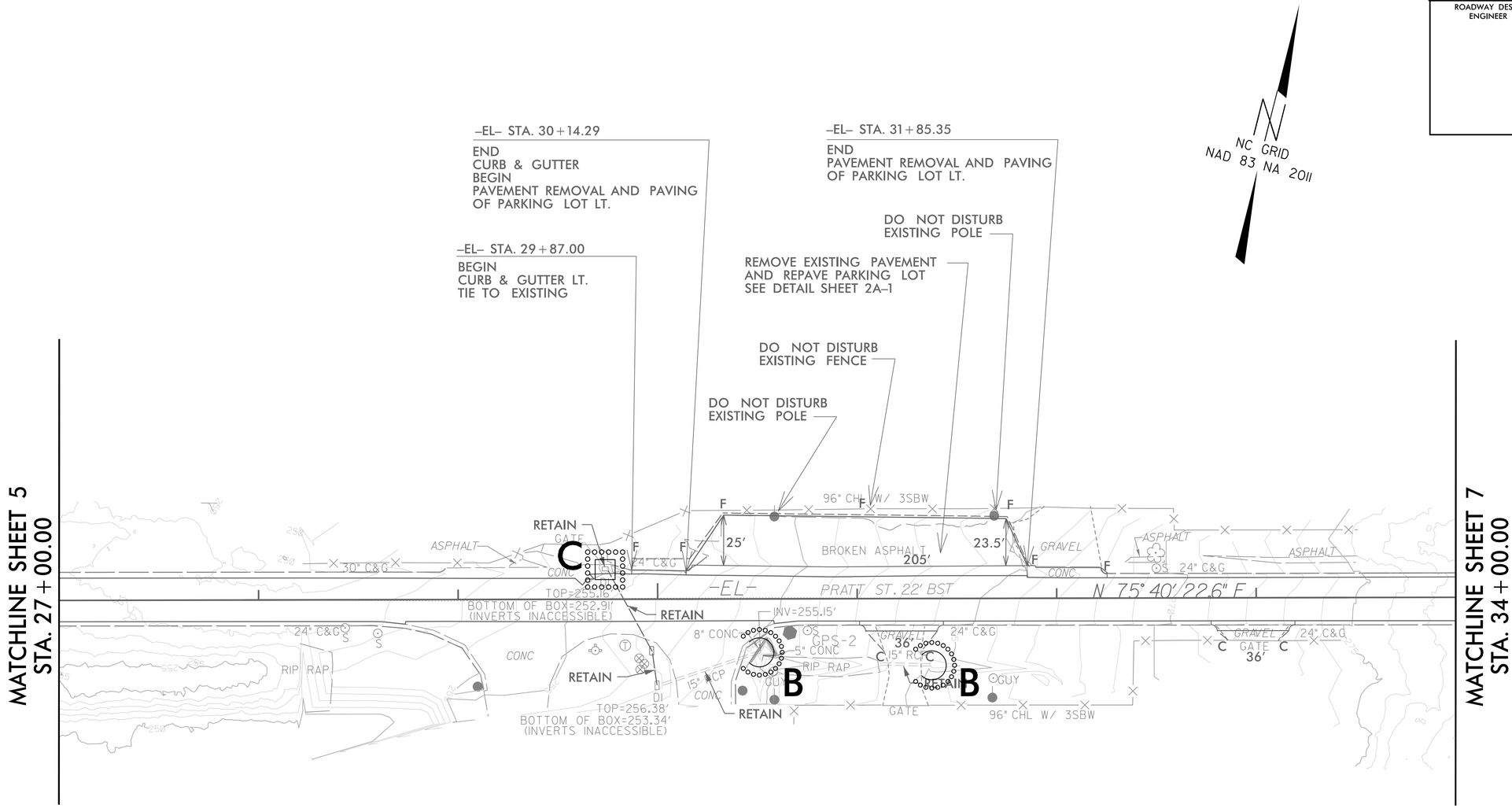


CLEARING AND GRUBBING
EROSION CONTROL FOR
CONSTRUCTION SHEET 6

NOTE:
PERIMETER EROSION CONTROL MEASURES SHALL BE
INSTALLED DURING CLEARING AND GRUBBING PHASE.

**SCALE: 1"=30'**

***1. PRATT ST.***
***SITE 1***

***49218.1***

***FORT BRAGG RESURFACING***

8/17/99

7/20/2023
49218.1_Pratt_EC_CG_psh 06.dgn

| PROJECT REFERENCE NO. | SHEET NO. |
|---|---|
| 49218.1 | EC-7/CONSTR.7 |
| ROADWAY DESIGN ENGINEER | HYDRAULICS ENGINEER |

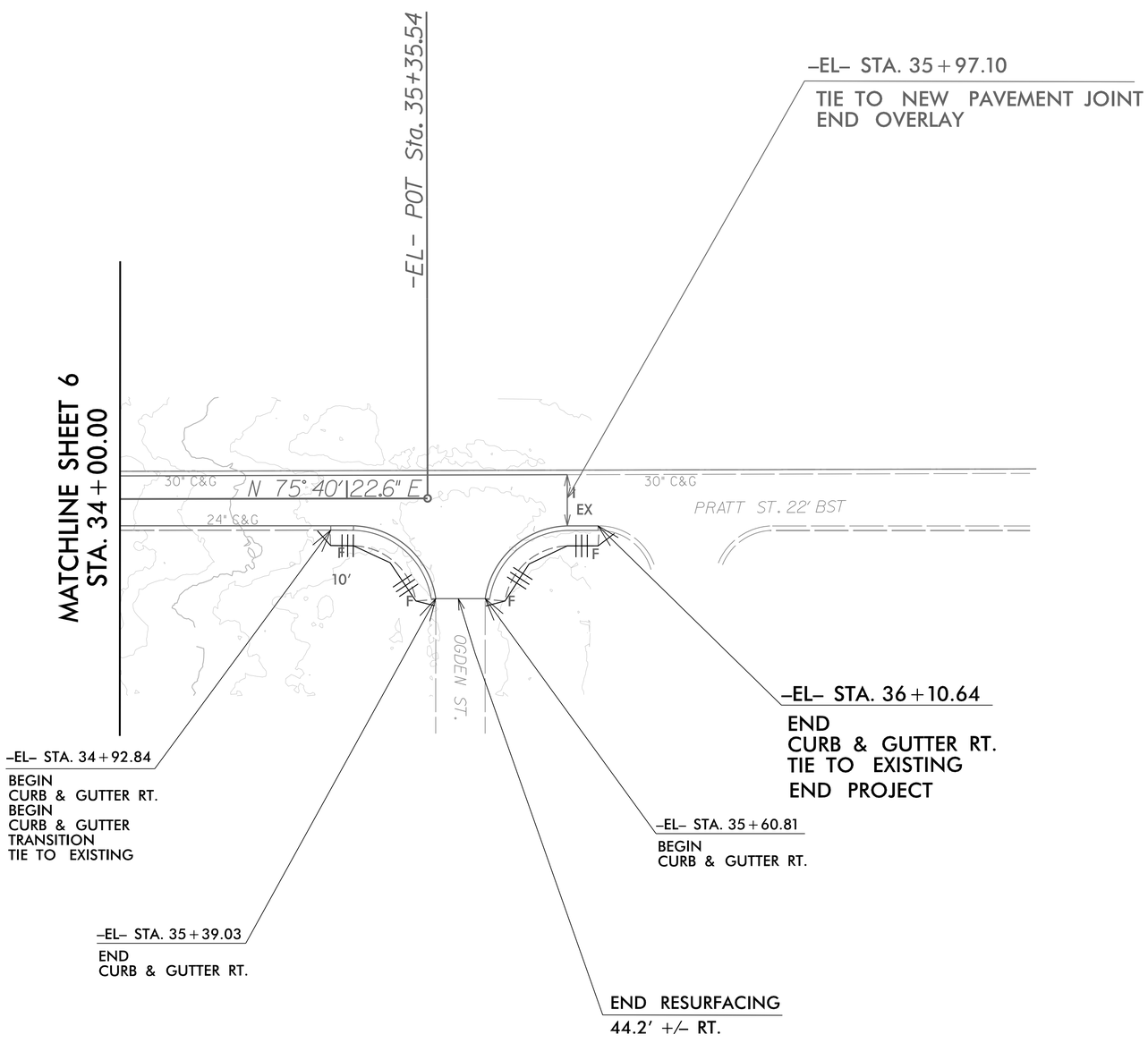


CLEARING AND GRUBBING
EROSION CONTROL FOR
CONSTRUCTION SHEET 7

NOTE:
PERIMETER EROSION CONTROL MEASURES SHALL BE INSTALLED DURING CLEARING AND GRUBBING PHASE.

**SCALE: 1"=30'**

**1. PRATT ST.**
**SITE 1**

**49218.1**

**FORT BRAGG RESURFACING**

8/17/99

7/20/2023
49218.1_Pratt_EC_CG_psh 07.dgn
USER:KEstep

| PROJECT REFERENCE NO. | SHEET NO. |
|---|---|
| 49218.1 | EC-8/CONSTR.4 |
| ROADWAY DESIGN ENGINEER | HYDRAULICS ENGINEER |

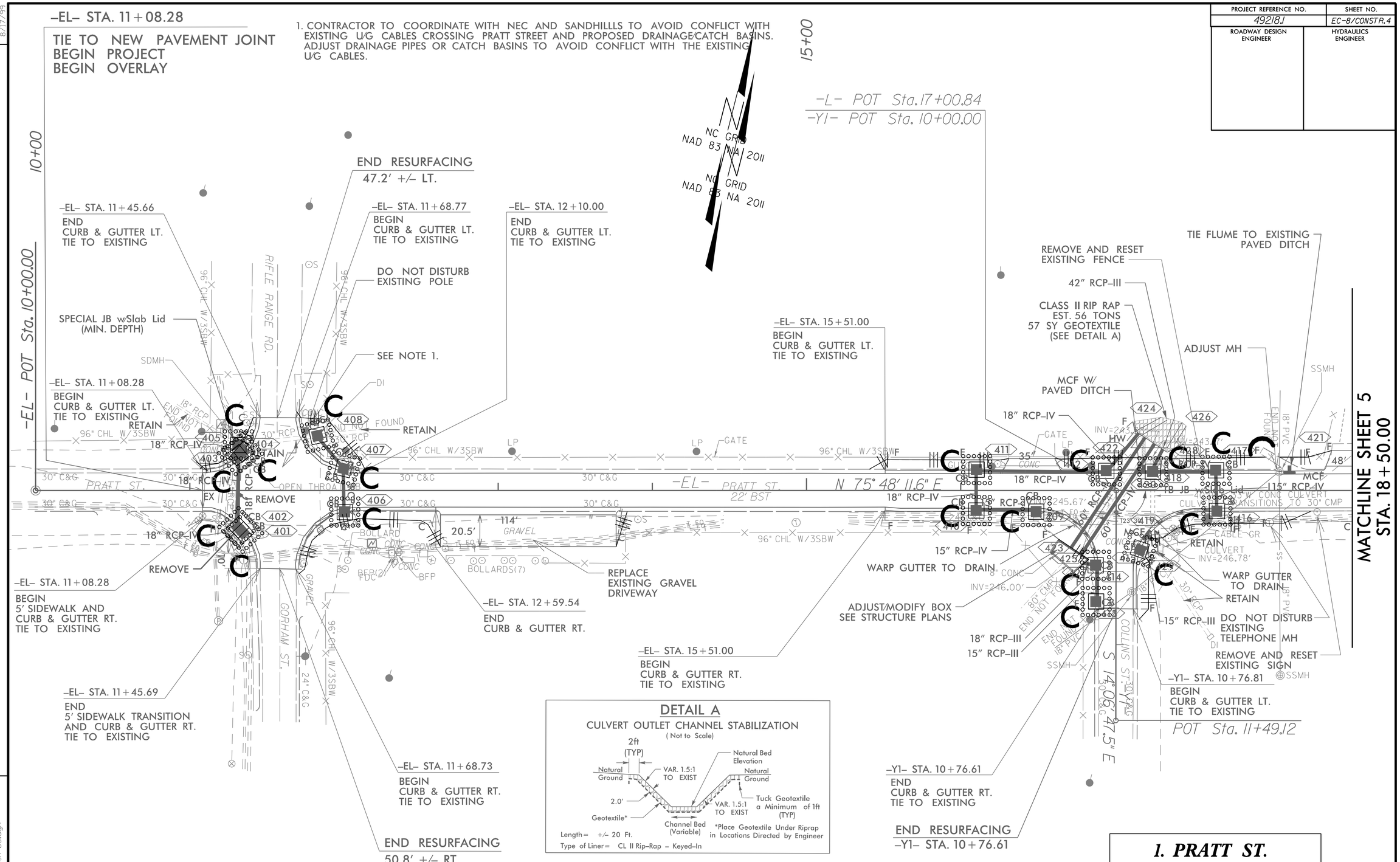


| Point | North | East | Elevation |
|---|---|---|---|
| 1 | 511107.6510 | 1991394.0670 | 251.0470 |
| 2 | 511430.5800 | 1992659.7310 | 260.9710 |

**SCALE: 1"=30'**

**1. PRATT ST.**
**SITE 1**

**49218.1**
**FORT BRAGG RESURFACING**

8/17/99

7/20/2023
49218.1_Pratt_EC_final.psh 08.dgn
USERFirstnan

| PROJECT REFERENCE NO. | SHEET NO. |
|---|---|
| 49218.1 | EC-9/CONSTR.5 |

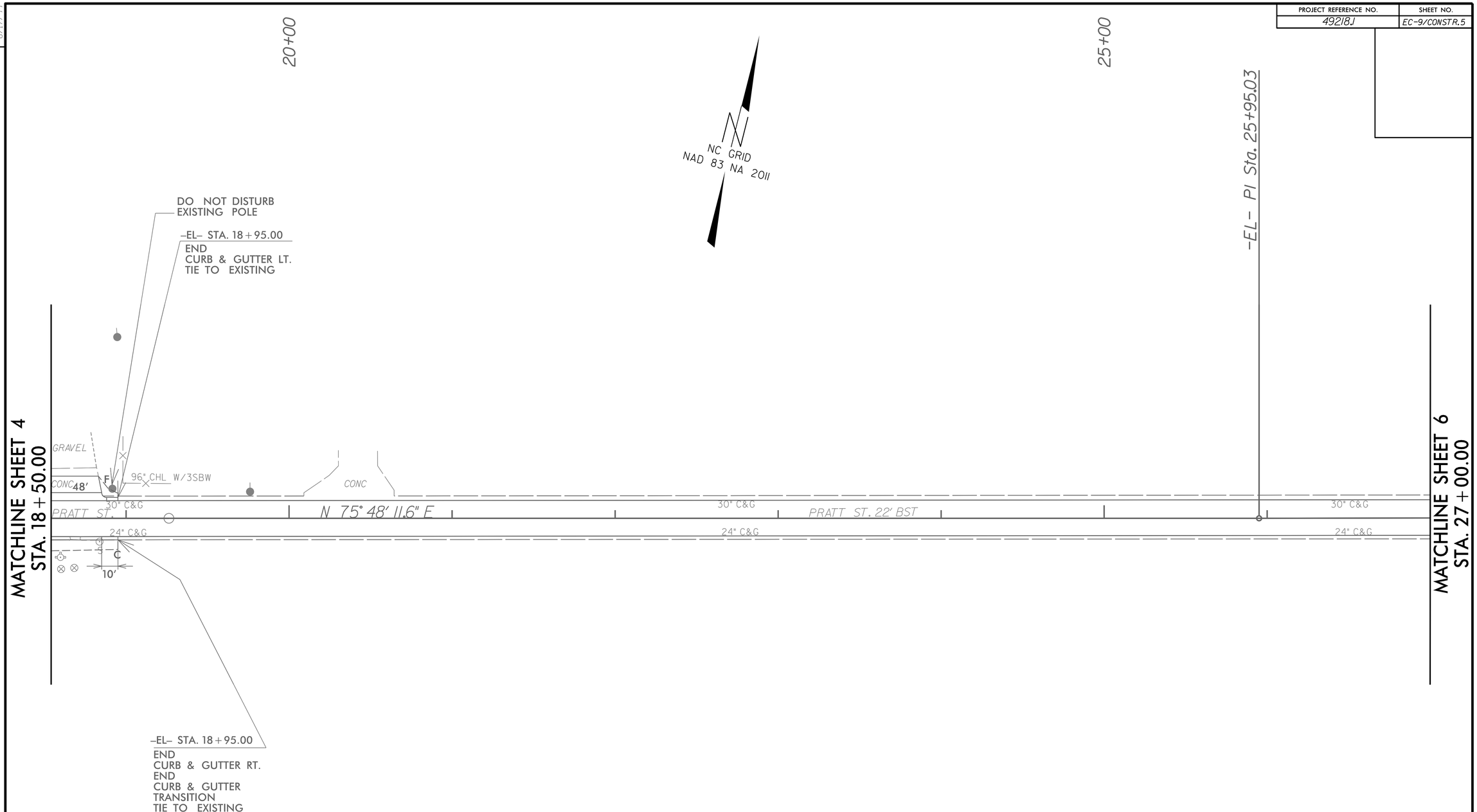


**1. PRATT ST.**
**SITE 1**

**SCALE: 1"=30'**

**49218.1**

**FORT BRAGG RESURFACING**

8/17/99

7/20/2023
49218.1_Pratt_EC_final.psh 09.dgn
USERKESTEN

| PROJECT REFERENCE NO. | SHEET NO. |
|---|---|
| 49218.1 | EC-10/CONSTR.6 |
| ROADWAY DESIGN ENGINEER | HYDRAULICS ENGINEER |

**DOCUMENT NOT CONSIDERED FINAL UNLESS ALL SIGNATURES COMPLETED**

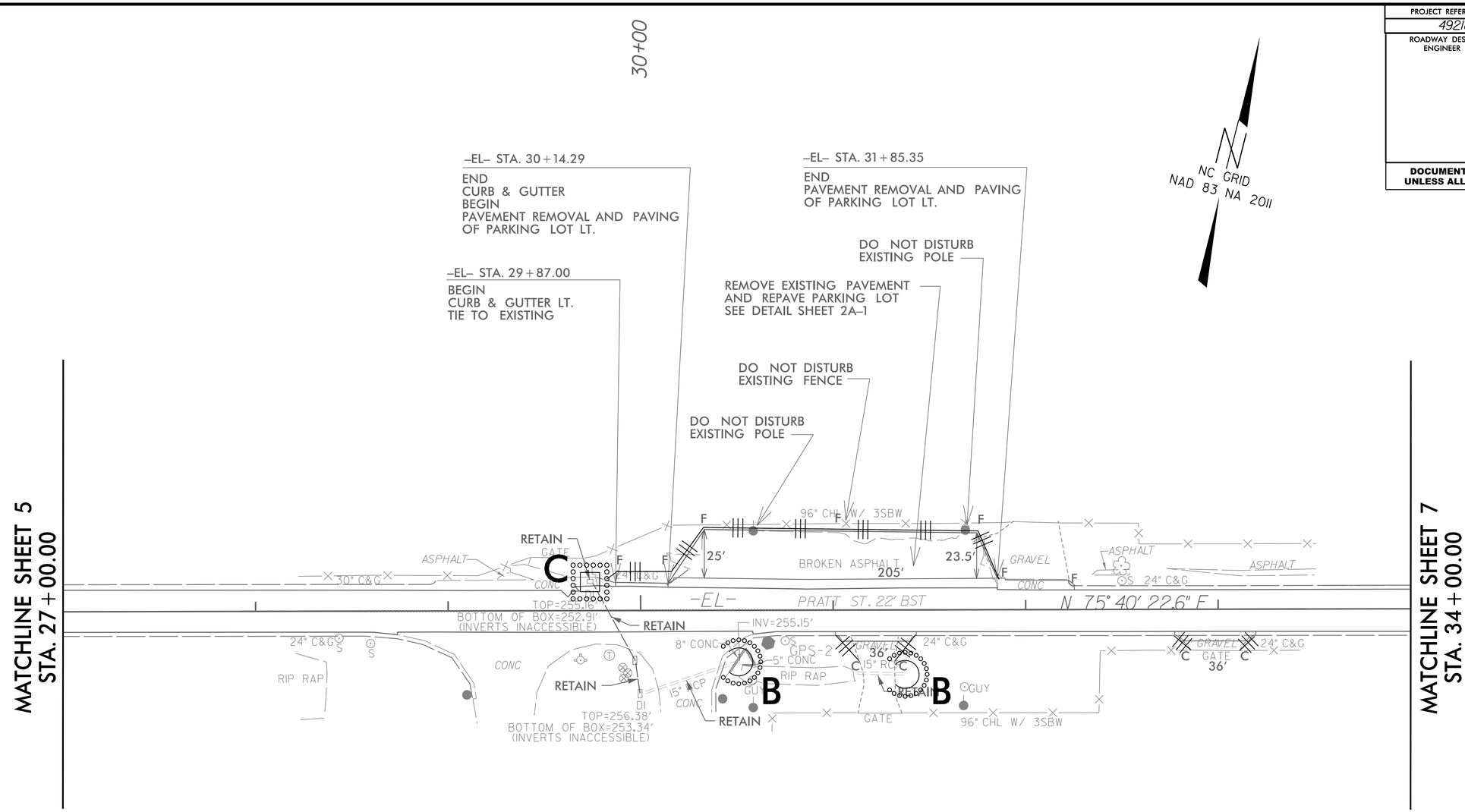


**1. PRATT ST.**
**SITE 1**

**SCALE: 1"=30'**

**49218.1**

**FORT BRAGG RESURFACING**

8/17/99

7/20/2023
49218.1_Pratt_EC_final.psh i10.dgn
USERKESTEN

| PROJECT REFERENCE NO. | SHEET NO. |
|---|---|
| 49218.1 | EC-11/CONSTR.7 |
| ROADWAY DESIGN ENGINEER | HYDRAULICS ENGINEER |

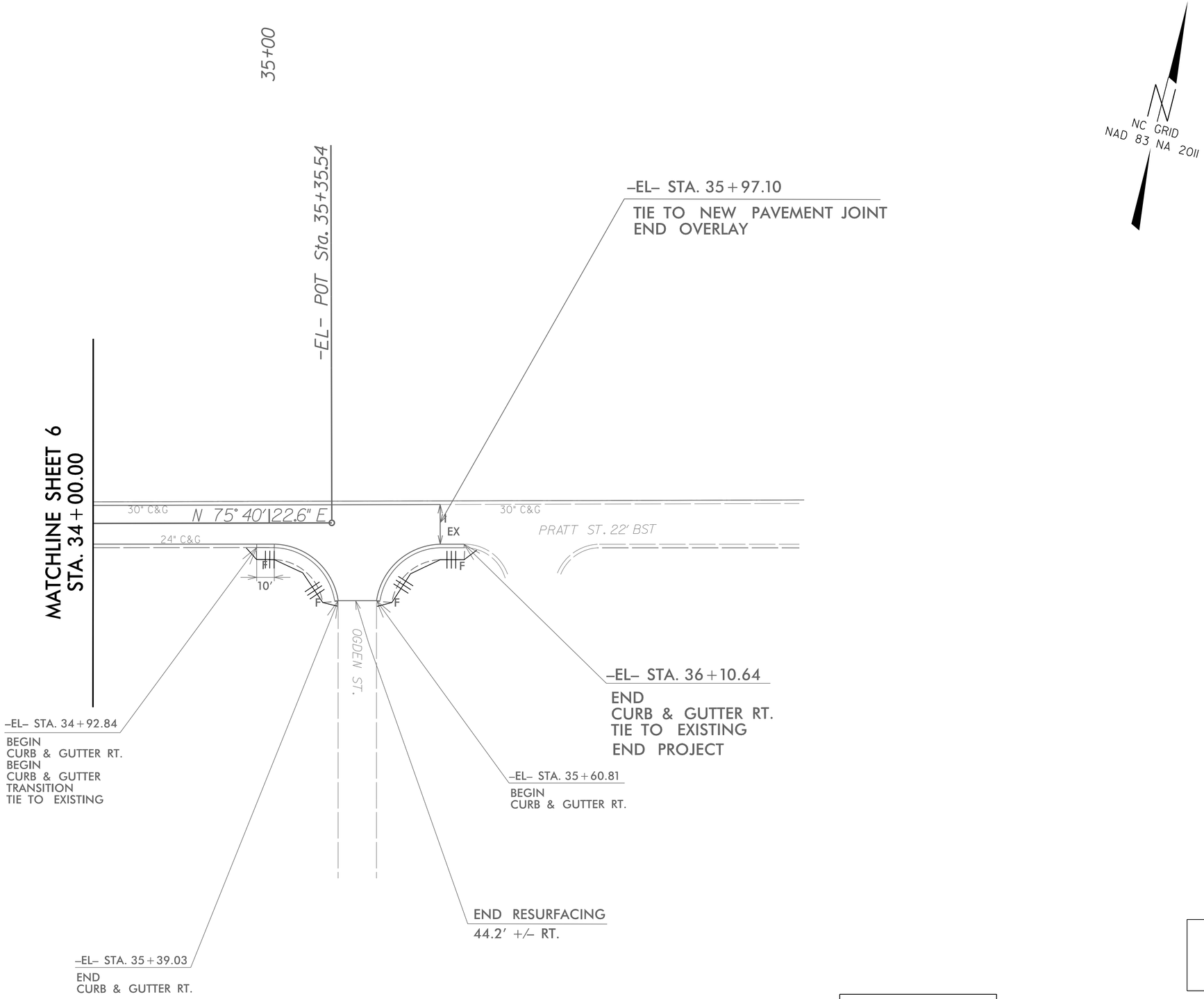


**SCALE: 1"=30'**

***1. PRATT ST.***
***SITE 1***

***49218.1***

***FORT BRAGG RESURFACING***

8/17/99

7/20/2023
49218.1_Pratt_EC_Final.psh 11.dgn
USER:KEstep

TIP PROJECT: 49218.1

| STATE PROJECT REFERENCE NO. | SHEET NO. |
|---|---|
| 49218.1 | UO–1 |

NOTE:
ALL UTILITY WORK SHOWN ON THIS SHEET WILL BE DONE BY OTHERS.
NO PAYMENT WILL BE MADE TO THE CONTRACTOR FOR UTILITY WORK SHOWN ON THIS SHEET.

STATE OF NORTH CAROLINA
DIVISION OF HIGHWAYS

# UTILITIES BY OTHERS PLANS
# CUMBERLAND COUNTY

**LOCATION: PRATT STREET AT RIFLE RANGE ROAD/ GORHAM STREET TO COLLINS STREET**

**TYPE OF WORK: UTILITY RELOCATION BY OTHERS**

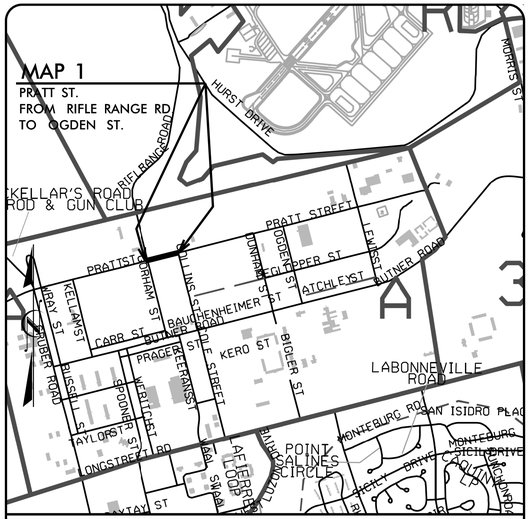


(NOT TO SCALE)
VICINITY MAP

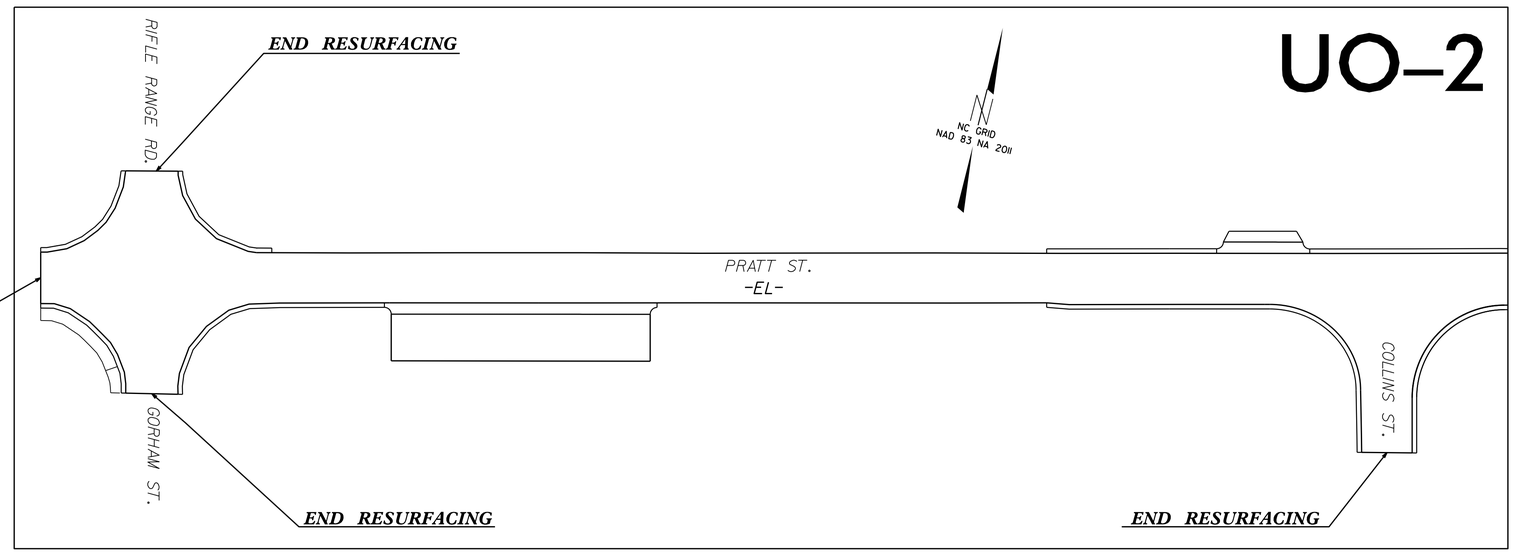


**–EL– STA. 11+08.28**
**BEGIN PROJECT**
**BEGIN OVERLAY**
**PRATT STREET**

**FINAL PLANS – 06/26/2023**

DOCUMENT NOT CONSIDERED FINAL UNTIL ALL SIGNATURES ARE COMPLETED

## GRAPHIC SCALES

30 15 0 30 60
PLANS

## INDEX OF SHEETS

| SHEET NO.: | DESCRIPTION: |
|---|---|
| UO–1 | TITLE SHEET |
| UO–2 | UBO PLAN SHEET |

## UTILITY OWNERS WITH CONFLICTS

(A) POWER – SANDHILLS
(B) WATER – ASUS


PREPARED IN THE OFFICE OF:
WETHERILL ENGINEERING
1223 Jones Franklin Rd.
Raleigh, N.C. 27606
License No. F-0377
Bus: 919 851 8077
Fax: 919 851 8107
TRANSPORTATION PLANNING/DESIGN - BRIDGE/STRUCTURE DESIGN
CIVIL/SITE DESIGN - GIS/GPS - SURVEY/SUE - UTILITIES - CONSTRUCTION OBSERVATION

PANKIL K. PATEL — UTILITY PROJECT MANAGER
TREVER REEVES — PROJECT UTILITY COORDINATOR

DIVISION OF HIGHWAYS
DIVISION 6
558 Gillespie St., 28301
Fayetteville, NC

CHRISTY W. HUFF, PE — DIVISION PROJECT MANAGER
RICK HANDLIN — DIVISION UTILITIES ENGINEER



09/08/99
6/26/2023
::\49218_Pratt_ut_tsh_U01_psh.dgn
USER:TReeves

NOTES:

1. CONTRACTOR TO COORDINATE WITH NEC AND SANDHILLLS TO AVOID CONFLICT WITH EXISTING U/G CABLES CROSSING PRATT STREET AND PROPOSED DRAINAGE/CATCH BASINS. ADJUST DRAINAGE PIPES OR CATCH BASINS TO AVOID CONFLICT WITH THE EXISTING U/G CABLES.

2. EXISTING U/G CABLES TO REMAIN. CONTRACTOR TO COORDINATE WITH NEC AND SANDHILLS TO AVOID CONFLICT WITH EXISTING U/G CABLES AND PROVIDE CONCRETE ENCASEMENT IF REQUIRED.

3. ACCORDING TO PNG, GAS LINE ON THE SOUTHEAST CORNER OF PRATT STREET AND COLLINS STREET HAS BEEN REMOVED.

# UTILITIES BY OTHERS

| PROJECT REFERENCE NO. | SHEET NO. |
|---|---|
| 49218.1 | U0-2 |
| THIS SHEET CORRESPONDS TO RDY- 4 | |

ALL PROPOSED UTILITY WORK SHOWN ON THIS SHEET WILL BE DONE BY OTHERS. NO PAYMENT WILL BE MADE TO THE CONTRACTOR FOR PROPOSED UTILITY WORK SHOWN ON THIS SHEET.


WETHERILL ENGINEERING
1223 Jones Franklin Rd.
Raleigh, N.C. 27606
License No. F-0377
Bus: 919 851 8077
Fax: 919 851 8107
TRANSPORTATION PLANNING/DESIGN - BRIDGE/STRUCTURE DESIGN
CIVIL/SITE DESIGN - GIS/GPS - SURVEY/SUE - UTILITIES - CONSTRUCTION OBSERVATION


***FINAL PLANS – 06/26/2023***

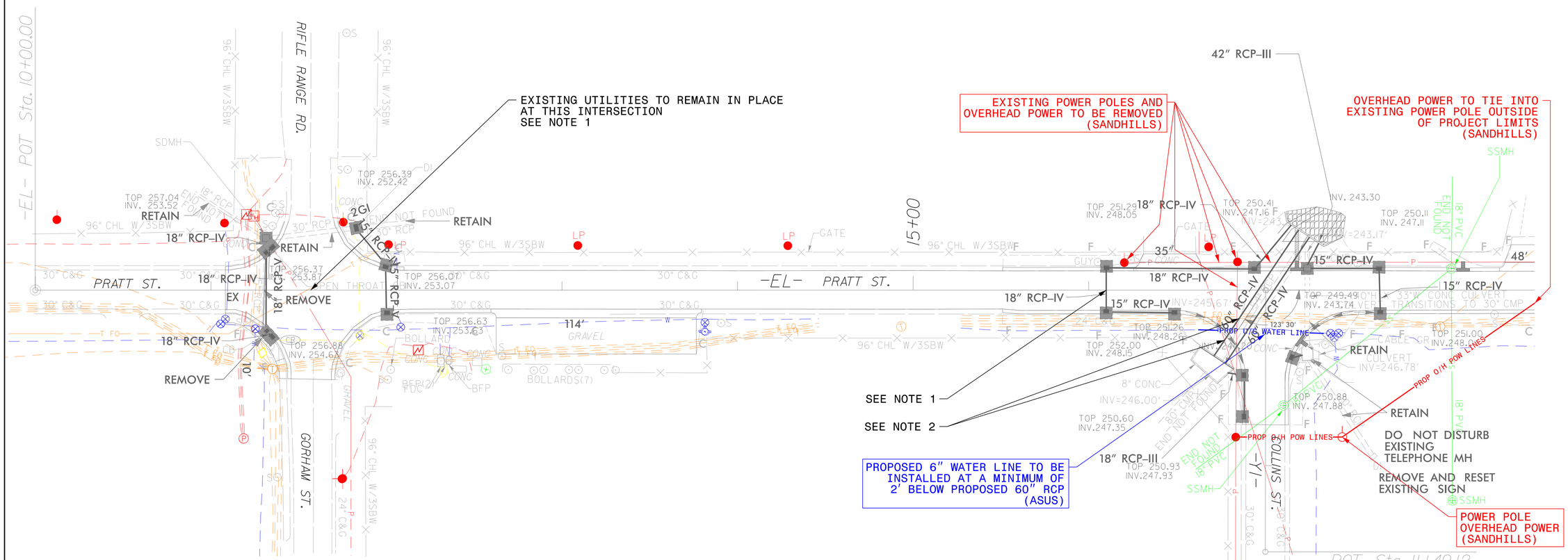


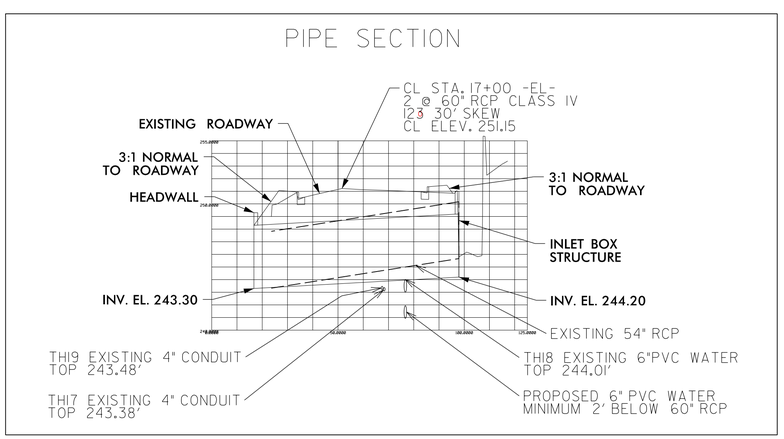


***SCALE: 1"=30'***

***1. PRATT ST.***
***SITE 1***

***49218.1***

***FORT BRAGG RESURFACING***

8/17/99

Fort Bragg C:\WE\Wetherill Engineering\UB0\Proj\49218.1_Pratt_ut_rdy4_U02_psh.dgn 11:21:56 AM 6/26/2023

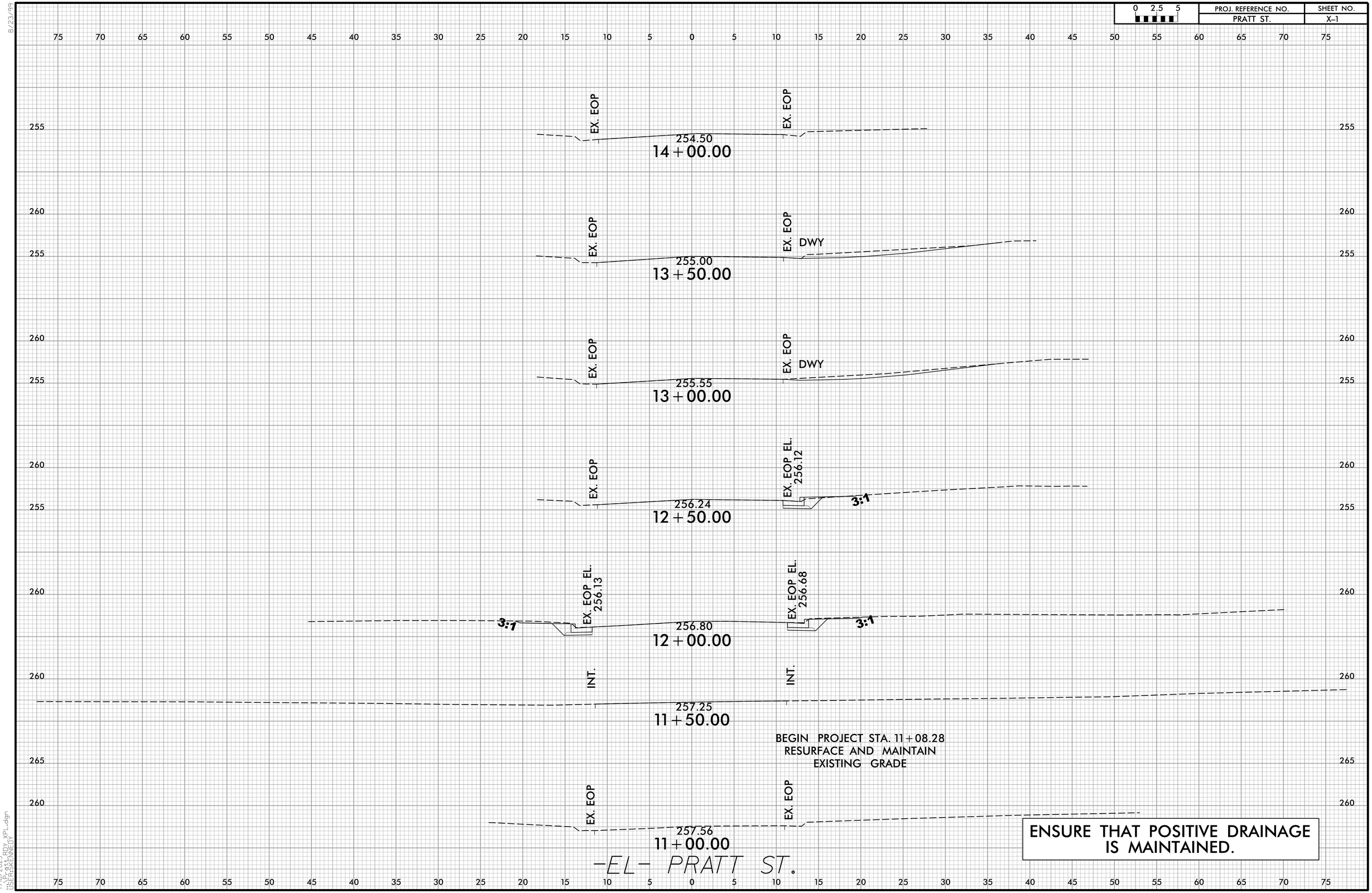


8/23/99
7/18/2023
USER:KENNEDY

| PROJ. REFERENCE NO. | SHEET NO. |
|---|---|
| PRATT ST. | X-2 |

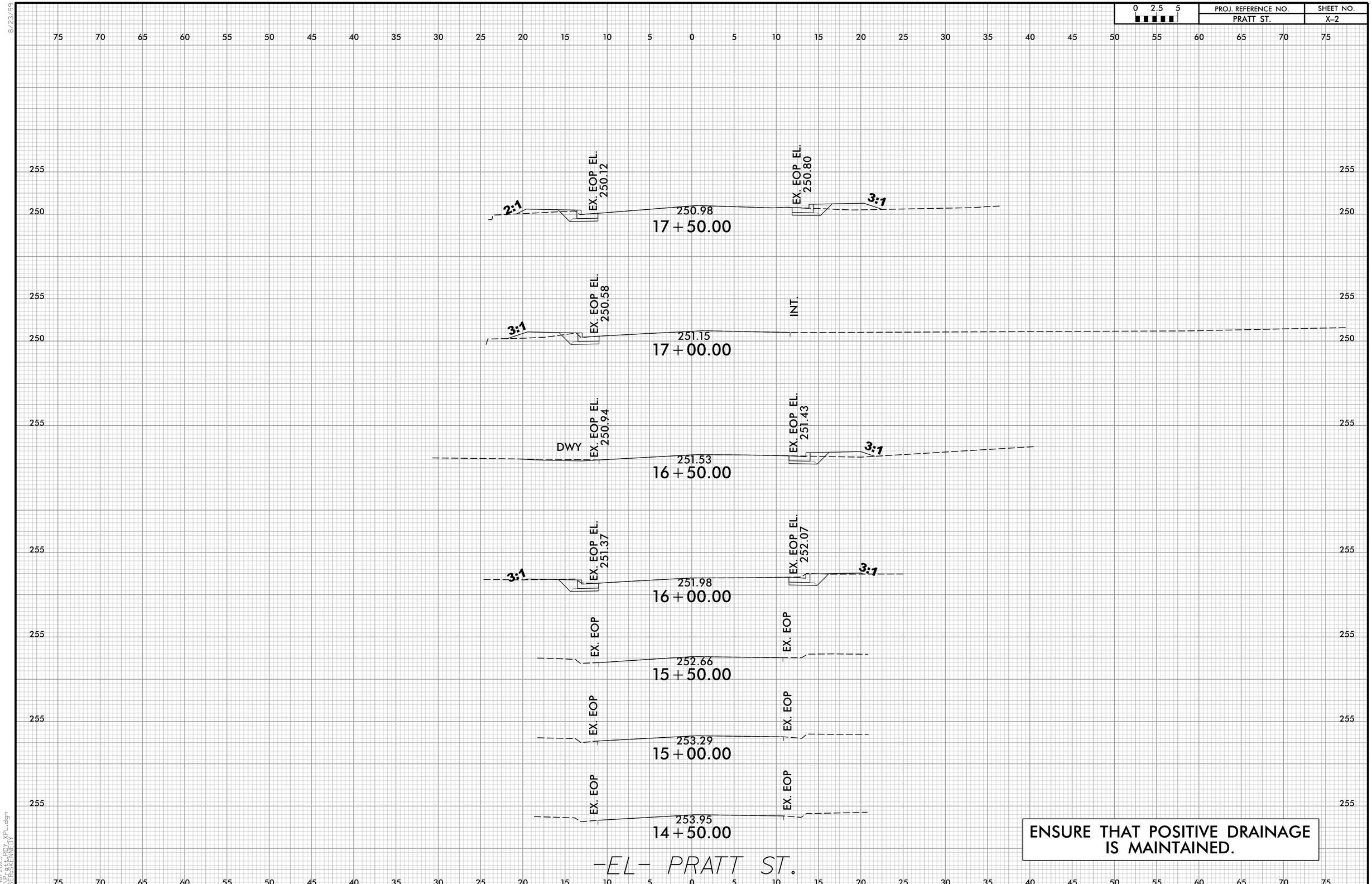


ENSURE THAT POSITIVE DRAINAGE IS MAINTAINED.

8/23/99

7/18/2023
V:\PROJ\RDY_XPL.dgn
USER:SKENNEDY

| PROJ. REFERENCE NO. | SHEET NO. |
|---|---|
| PRATT ST. | X-3 |

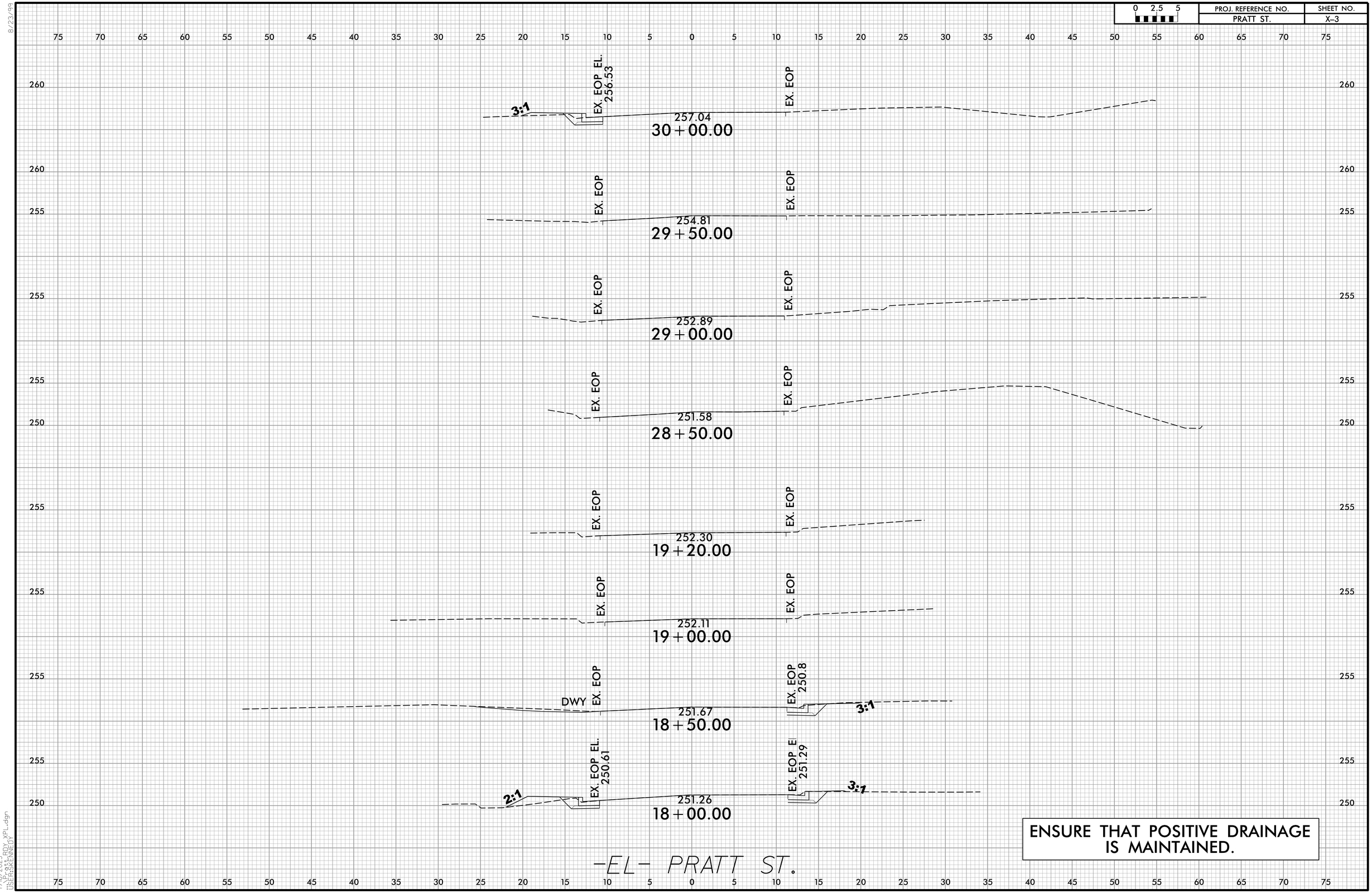


ENSURE THAT POSITIVE DRAINAGE IS MAINTAINED.

8/23/99

7/18/2023
USER:BKENNEDY

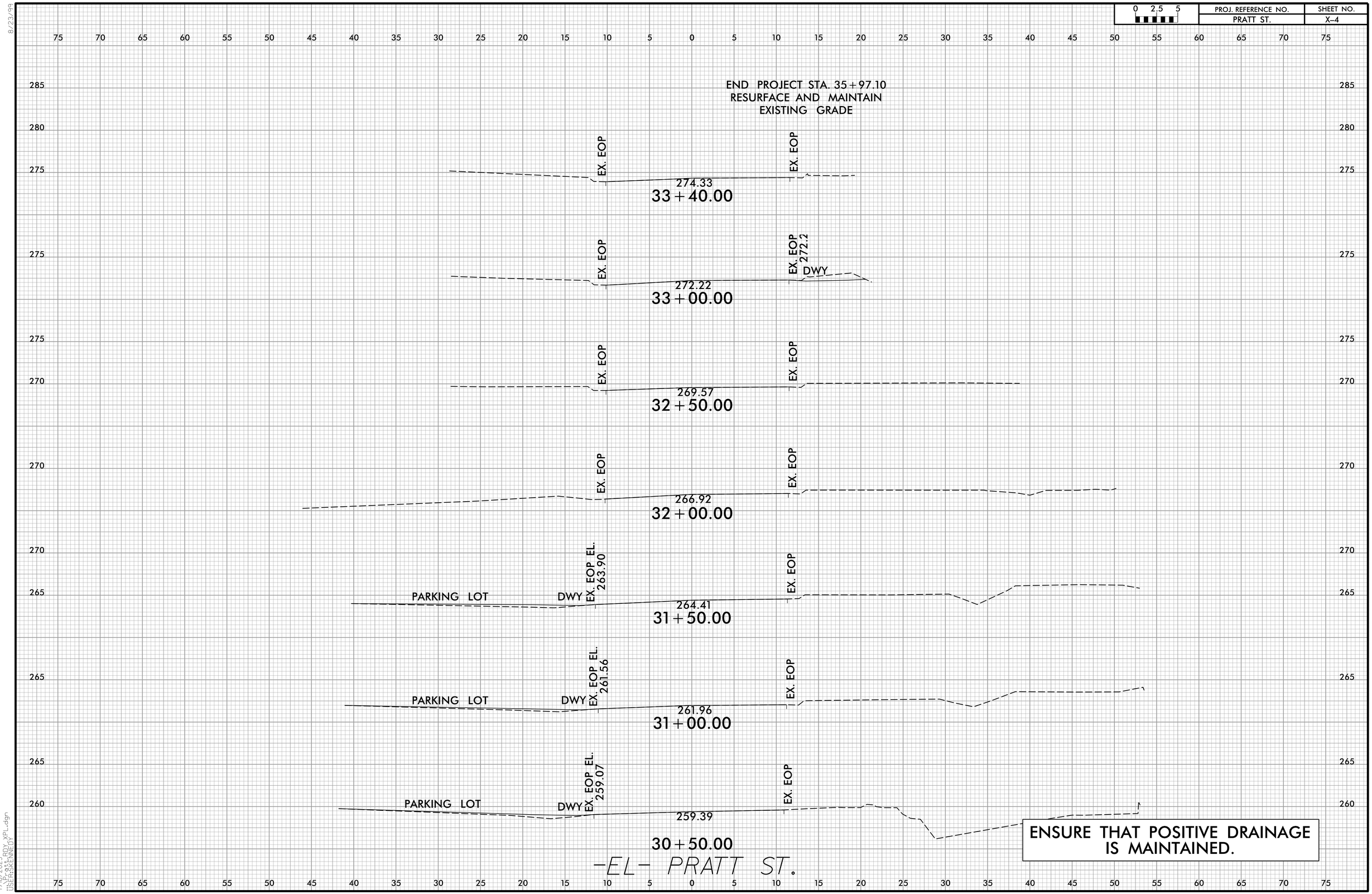


8/23/99
7/18/2023
USER:KENNEDY

DocuSign Envelope ID: 781B57ED-9A32-4775-8BB1-ADE386EFF969

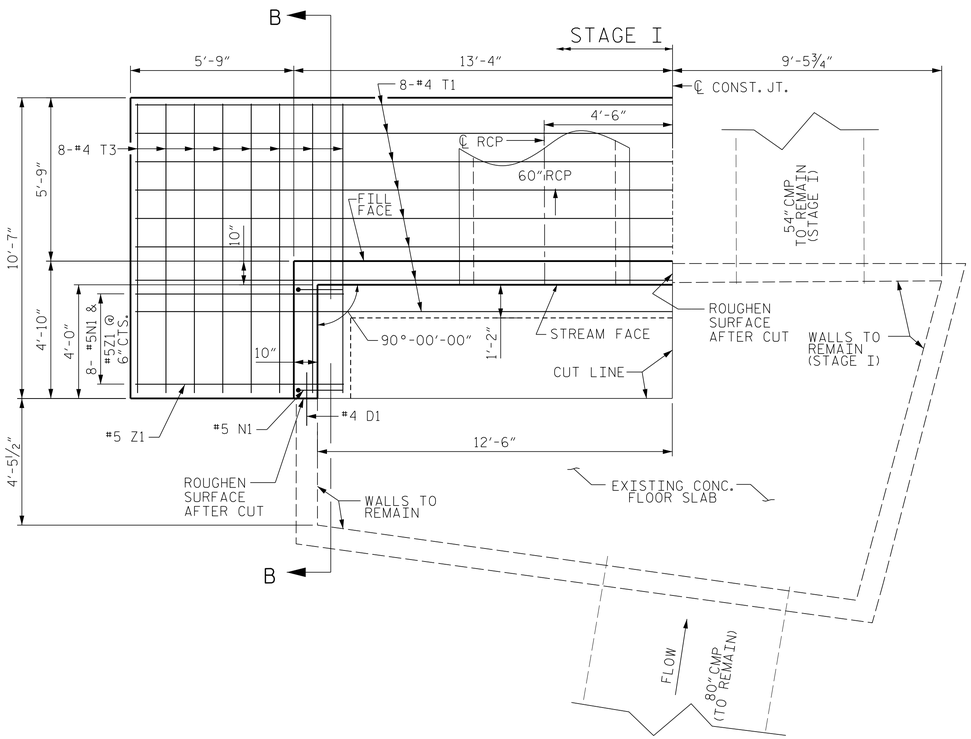


STAGE I PLAN

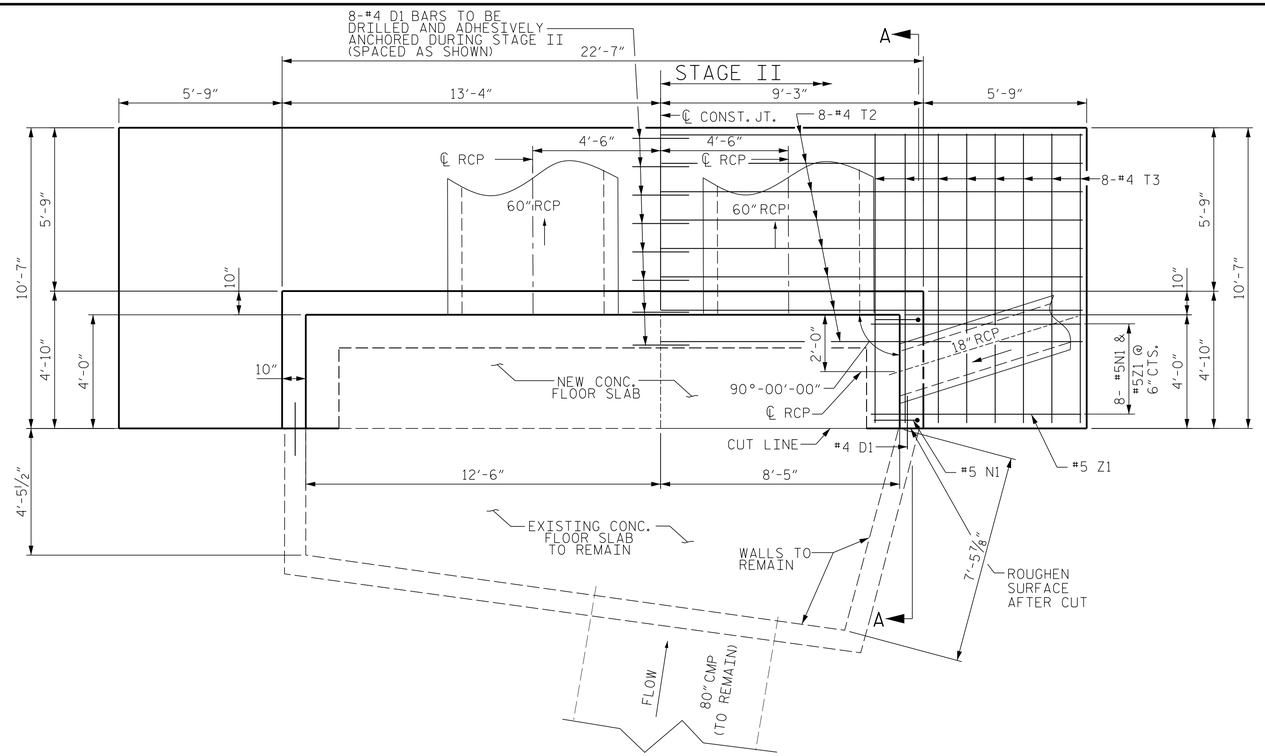


STAGE II PLAN

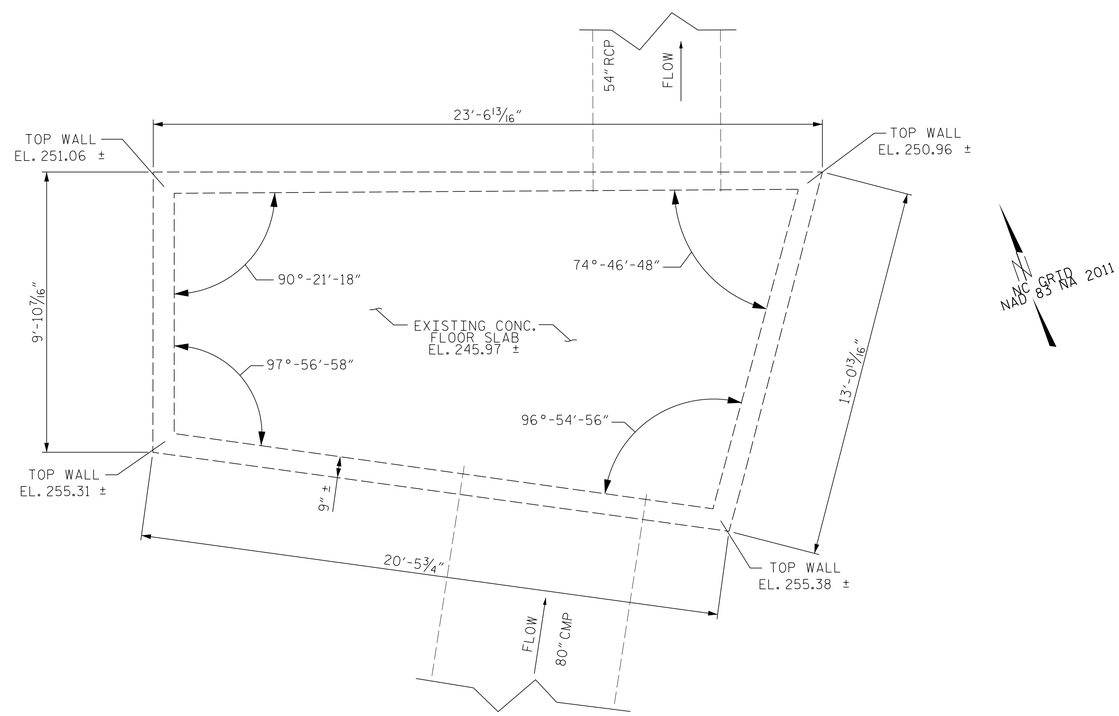


EXISTING PLAN

NOTES:

1. FOR OTHER DESIGN DATA AND NOTES, SEE STANDARD NOTE SHEET.
2. #4 D1 BARS SHALL BE ADHESIVELY ANCHORED INTO EXISTING WALLS. NO FIELD TESTING IS REQUIRED.
3. #4 D1 BARS MAY BE FIELD BENT AS NECESSARY.
4. SEE SHEET 1 OF 4 FOR "N", "Z", AND "T" BAR PLACEMENTS IN SIDE WALLS.
5. 'H' BARS MAY BE CUT 2" SHORT OF PIPE WALL WHERE IT INTERFERES.
6. 3"Ø WEEP HOLES INDICATED TO BE IN ACCORDANCE WITH THE SPECIFICATIONS.
7. THE COST OF PROVIDING THE FLOWABLE FILL SHALL BE INCLUDED IN THE PRICE BID FOR CLASS A CONCRETE.
8. FOR FALSEWORK AND FORMWORK, SEE SPECIAL PROVISIONS.
9. FOR SUBMITTAL OF WORKING DRAWINGS, SEE SPECIAL PROVISIONS.
10. FOR CRANE SAFETY, SEE SPECIAL PROVISIONS.
11. FOR GROUT FOR STRUCTURES, SEE SPECIAL PROVISIONS.

SOUTH JUNCTION BOX AND NORTH HEADWALL HAS BEEN DETAILED AS STAGED CONSTRUCTED. AT THE CONTRACTOR'S OPTION, HE MAY BUILD STAGE I AND II CONCURRENTLY, AND CONSTRUCTION JOINTS BETWEEN STAGES MAY BE TREATED AS PERMITTED CONSTRUCTION JOINTS. NO PAYMENT WILL BE MADE; ANY REVISION TO MATERIALS OR BAR LENGTHS WILL BE MADE AT THE CONTRACTOR'S EXPENSE.

## TOTAL QUANTITIES

| CLASS A CONCRETE | | |
|---|---|---|
| CLASS A CONCRETE | | |
| STAGE I | | |
| FTG. & WALLS | 9.6 | CY |
| 6" FLOOR SLAB | 1.0 | CY |
| STAGE II | | |
| FTG. & WALLS | 7.4 | CY |
| 6" FLOOR SLAB | 0.7 | CY |
| TOTAL | 18.7 | CY |
| REINFORCING STEEL | 2038 | LBS |
| GALVANIZED RAILS | 62.73 | LIN. FT. |

PROJECT NO. 49218.1

CUMBERLAND COUNTY

STATION: 17+00.00 -EL-

SHEET 1 OF 4

ENGINEER OF RECORD
1/30/2024

NORTH CAROLINA PROFESSIONAL SEAL 22072 ENGINEER JOHN ARTHUR DILWORTH

DocuSigned by:
021382269228413...

WETHERILL ENGINEERING
1223 Jones Franklin Rd.
Raleigh, N.C. 27606
Bus: 919 851 8077
Fax: 919 851 8107
LICENSE NO. F-0377

STATE OF NORTH CAROLINA
DEPARTMENT OF TRANSPORTATION
RALEIGH

SOUTH JUNCTION BOX

| REVISIONS | | | | | | SHEET NO. |
|---|---|---|---|---|---|---|
| NO. | BY: | DATE: | NO. | BY: | DATE: | S-1 |
| 1 | | | 3 | | | TOTAL SHEETS |
| 2 | | | 4 | | | 7 |

DRAWN BY : J. PENDERGRAFT DATE : 2-23
CHECKED BY : T. KOCH DATE : 2-23

DOCUMENT NOT CONSIDERED FINAL UNLESS ALL SIGNATURES COMPLETED

P:\2020\20135.01_Div 6_Ft.Bragg_C-\Structures\dgn\49218.1_SD_PLN.dgn
1/30/2024 10:43:53 AM

DocuSign Envelope ID: 781B57ED-9A32-4775-8BB1-ADE386EFF969

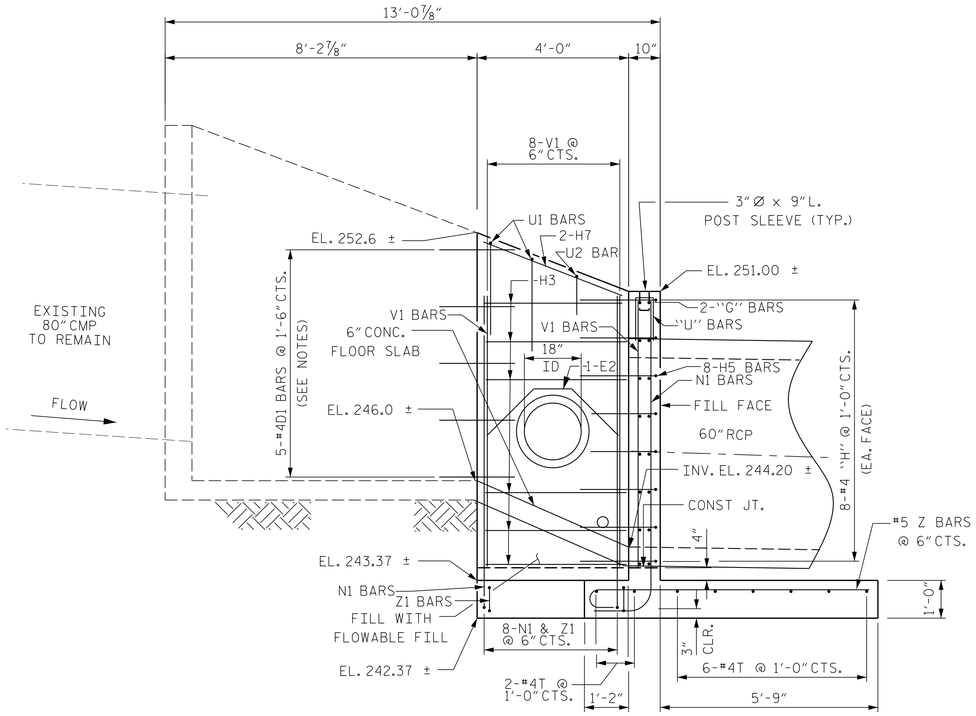


## SECTION A-A

(STAGE II)

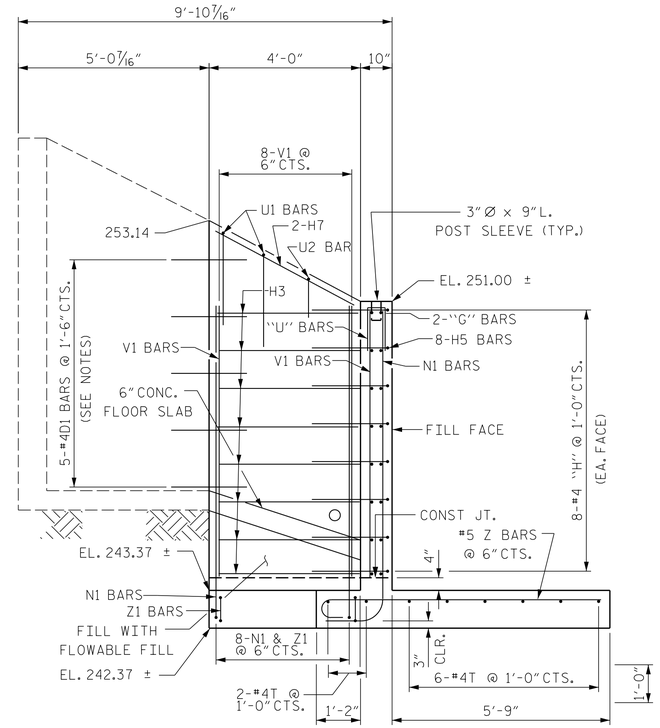


## SECTION B-B

(STAGE I)

## CONSTRUCTION SEQUENCE:

### STAGE I

1. CUT AND REMOVE THE WALL AND FLOOR SLAB SECTIONS AS SHOWN IN DETAIL.
2. EXCAVATE TO PROPER ELEVATION TO INSTALL SECTION OF HEADWALL FOOTING. INSTALL FOOTING AND 4" OF WALL.
3. INSTALL THE FLOOR SLAB SECTION.
4. FILL THE ANNULAR SPACE BELOW THE FLOOR SLAB WITH 200 PSI FLOWABLE FILL.
5. INSTALL THE 60" RCP.
6. ROUGHEN THE CUT SURFACE OF WALL.
7. POUR THE REST OF THE WALL FULL HEIGHT.

### STAGE II

1. CUT AND REMOVE THE WALL, THE EXISTING 54" PIPE AND THE FLOOR SLAB SECTION AS SHOWN IN DETAIL.
2. EXCAVATE TO PROPER ELEVATION TO INSTALL SECTION OF HEADWALL FOOTING. INSTALL FOOTING AND 4" OF WALL.
3. INSTALL THE FLOOR SLAB SECTION.
4. FILL THE ANNULAR SPACE BELOW THE FLOOR SLAB WITH 200 PSI FLOWABLE FILL.
5. DRILL & ADHESIVELY ANCHOR 6 'D' BARS INTO STAGE I HEADWALL.
6. INSTALL THE 60" RCP.
7. ROUGHEN THE CUT SURFACE OF WALL.
8. POUR THE REST OF THE WALL FULL HEIGHT.

SOUTH JUNCTION BOX AND NORTH HEADWALL HAS BEEN DETAILED AS STAGED CONSTRUCTED. AT THE CONTRACTOR'S OPTION, HE MAY BUILD STAGE I AND II CONCURRENTLY, AND CONSTRUCTION JOINTS BETWEEN STAGES MAY BE TREATED AS PERMITTED CONSTRUCTION JOINTS. NO PAYMENT WILL BE MADE; ANY REVISION TO MATERIALS OR BAR LENGTHS WILL BE MADE AT THE CONTRACTOR'S EXPENSE.

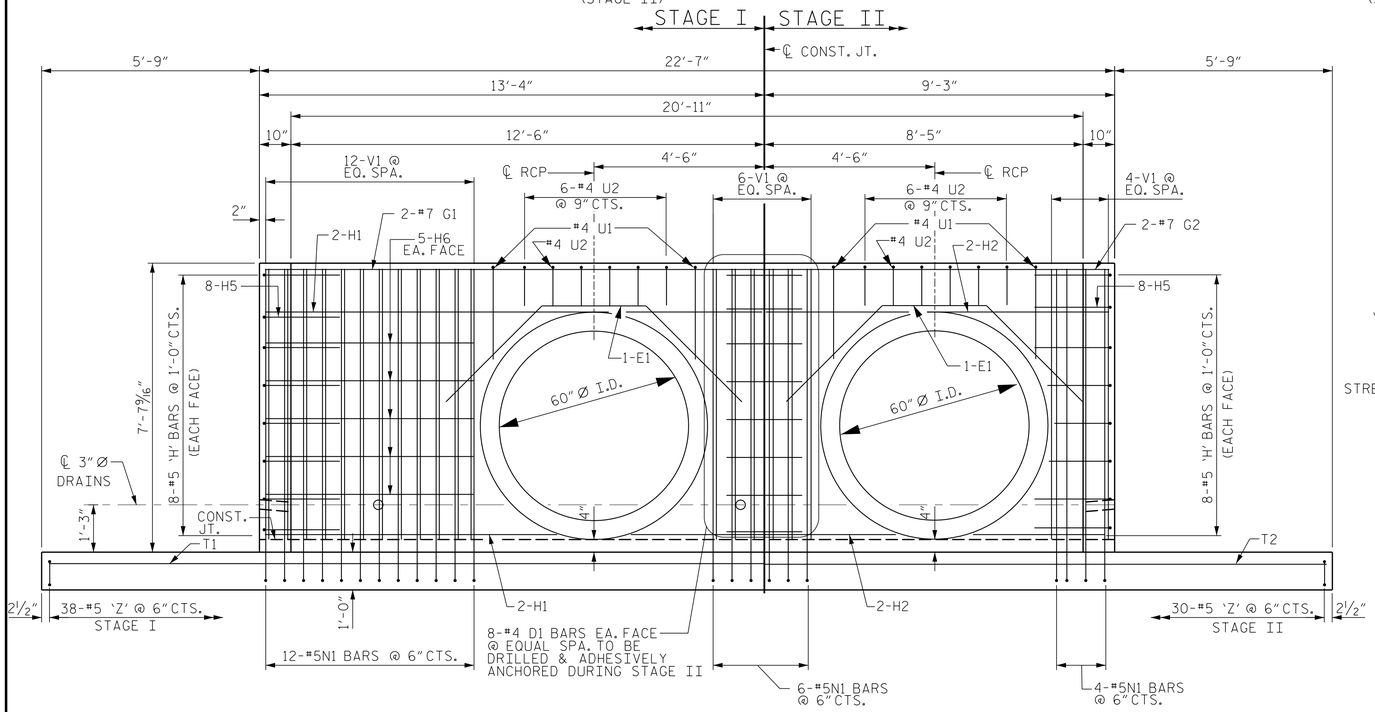


## ELEVATION

LOOKING NORTH

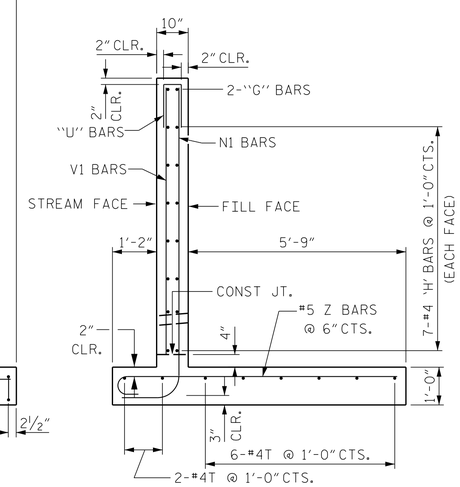


## WALL SECTION

SHOWING REINFORCING STEEL
'H' BARS MAY BE CUT 2" SHORT
OF PIPE WALL WHERE IT INTERFERES

PROJECT NO. 49218.1

CUMBERLAND COUNTY

STATION: 17+00.00 -EL-

SHEET 2 OF 4

ENGINEER OF RECORD
1/30/2024

NORTH CAROLINA PROFESSIONAL SEAL 22072 ENGINEER JOHN ARTHUR DILWORTH

DocuSigned by:
5213822692284...

WETHERILL ENGINEERING
1223 Jones Franklin Rd.
Raleigh, N.C. 27606
Bus: 919 851 8077
Fax: 919 851 8107
LICENSE NO. F-0377

STATE OF NORTH CAROLINA
DEPARTMENT OF TRANSPORTATION
RALEIGH

SOUTH JUNCTION BOX

| REVISIONS | | | | | | SHEET NO. |
|---|---|---|---|---|---|---|
| NO. | BY: | DATE: | NO. | BY: | DATE: | S-2 |
| 1 | | | 3 | | | TOTAL SHEETS |
| 2 | | | 4 | | | 7 |

DOCUMENT NOT CONSIDERED FINAL UNLESS ALL SIGNATURES COMPLETED

DRAWN BY : J. PENDERGRAFT DATE : 2-23
CHECKED BY : T. KOCH DATE : 2-23

P:\2020\20135.01 Div 6 Ft.Bragg C:\Structures\dgn\49218.1_SD_PLN.dgn
1/30/2024 10:46:03 AM

DocuSign Envelope ID: 781B57ED-9A32-4775-8BB1-ADE386EFF969

## BILL OF MATERIAL

| BAR | NO. | SIZE | TYPE | LENGTH | WEIGHT |
|---|---|---|---|---|---|
| D1 | 34 | 4 | STR | 2'-0" | 45 |
| E1 | 2 | 6 | 2 | 9'-11" | 30 |
| E2 | 1 | 6 | 2 | 4'-6" | 7 |
| G1 | 2 | 7 | STR | 13'-0" | 53 |
| G2 | 2 | 7 | STR | 8'-11" | 36 |
| H1 | 4 | 4 | STR | 13'-0" | 35 |
| H2 | 4 | 4 | STR | 8'-11" | 24 |
| H3 | 28 | 4 | STR | 3'-8" | 69 |
| H4 | 2 | 4 | STR | 3'-11" | 5 |
| H5 | 32 | 4 | 3 | 4'-0" | 86 |
| H6 | 10 | 4 | STR | 5'-6" | 37 |
| H7 | 2 | 4 | STR | 4'-2" | 6 |
| N1 | 38 | 5 | 1 | 9'-8" | 383 |
| T1 | 8 | 4 | STR | 18'-9" | 100 |
| T2 | 8 | 4 | STR | 14'-8" | 78 |
| T3 | 16 | 4 | STR | 10'-3" | 110 |
| U1 | 8 | 4 | 5 | 5'-5" | 29 |
| U2 | 14 | 4 | 5 | 2'-7" | 24 |
| V1 | 38 | 4 | STR | 7'-1" | 180 |
| Z1 | 84 | 5 | 4 | 8'-0" | 701 |
| REINFORCING STEEL | | | | | 2038 LBS |

CLASS A CONCRETE

STAGE I

| | | |
|---|---|---|
| FTG. & WALLS | 9.6 | CY |
| 6" FLOOR SLAB | 1.0 | CY |

STAGE II

| | | |
|---|---|---|
| FTG. & WALLS | 7.4 | CY |
| 6" FLOOR SLAB | 0.7 | CY |
| TOTAL | 18.7 | CY |

## BAR TYPES

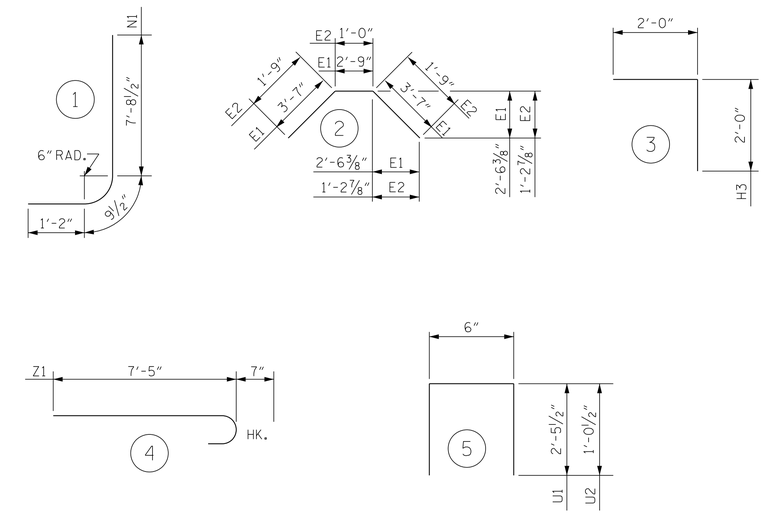


ALL BAR DIMENSIONS ARE OUT TO OUT.

PROJECT NO. 49218.1

CUMBERLAND COUNTY

STATION: 17+00.00 -EL-

SHEET 3 OF 4

ENGINEER OF RECORD
1/30/2024

NORTH CAROLINA PROFESSIONAL SEAL 22072 ENGINEER JOHN ARTHUR DILWORTH

DocuSigned by:
021382269228438...

WETHERILL ENGINEERING

1223 Jones Franklin Rd.
Raleigh, N.C. 27606
Bus: 919 851 8077
Fax: 919 851 8107
LICENSE NO. F-0377

STATE OF NORTH CAROLINA
DEPARTMENT OF TRANSPORTATION
RALEIGH

# BILL OF MATERIAL SOUTH JUNCTION BOX

| REVISIONS | | | | | | SHEET NO. |
|---|---|---|---|---|---|---|
| NO. | BY: | DATE: | NO. | BY: | DATE: | S-3 |
| 1 | | | 3 | | | TOTAL SHEETS |
| 2 | | | 4 | | | 7 |

DRAWN BY : J. PENDERGRAFT DATE : 2-23
CHECKED BY : T. KOCH DATE : 2-23

DOCUMENT NOT CONSIDERED FINAL UNLESS ALL SIGNATURES COMPLETED

P:\2020\20135.01 Div 6 Ft.Bragg C:\Structures\dgn\49218.1_SD_PLN.dgn
1/30/2024 10:48:19 AM

DocuSign Envelope ID: 781B57ED-9A32-4775-8BB1-ADE386EFF969

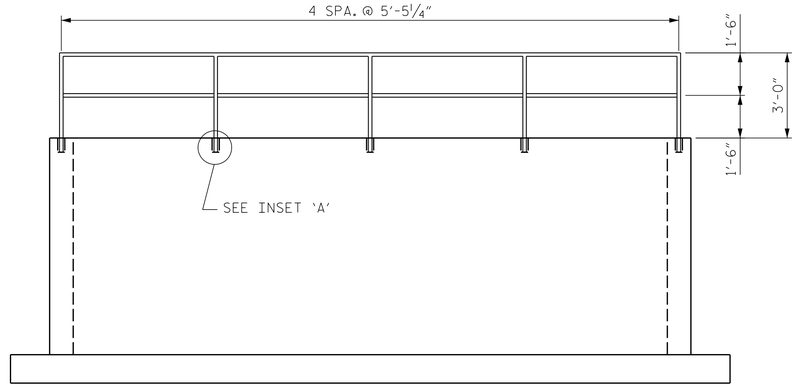


NORTH WALL ELEVATION

## NOTES:

CONSTRUCT PROPOSED STEEL PIPE RAIL 1½" DIAMETER SCHEDULE 40 PLAIN END GALVANIZED STEEL PIPE MEETING THE REQUIREMENTS OF ASTM A53.

EMBEDDED PIPE RAIL INTO PROPOSED HEADWALLS AND WINGS AS SHOWN ON THE PLANS AND GROUT INTO PLACE. FOR GROUT, SEE SPECIAL PROVISIONS.

REPAIR GALVANIZING IN ACCORDANCE WITH SECTION 1076 OF THE NCDOT STANDARD SPECIFICATIONS.

WELD IN ACCORDANCE WITH ARTICLE 1072-18 OF THE STANDARD SPECIFICATIONS.

POST AND VERTICAL ELEMENTS OF THE RAIL SHALL BE PLUMB.

| PAY ITEM | |
|---|---|
| GALVANIZED RAILS | 62.73 LIN. FT. |

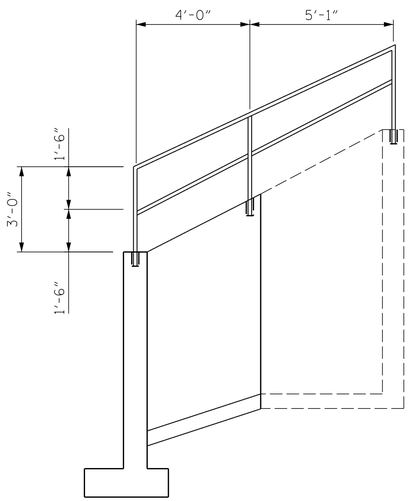


WEST WALL ELEVATION

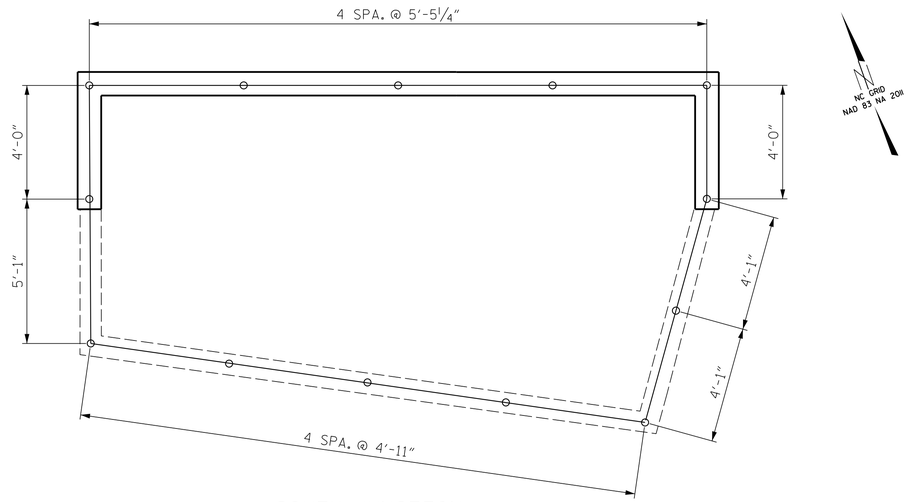


SOUTH JUNCTION BOX PLAN

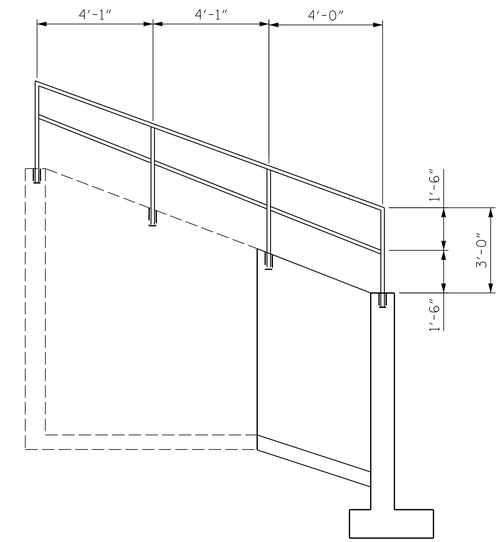


EAST WALL ELEVATION

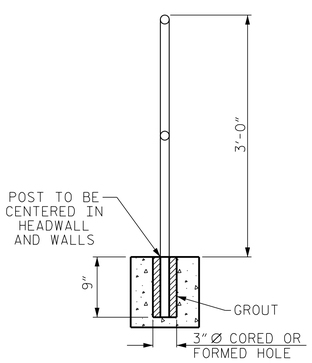


INSET 'A'

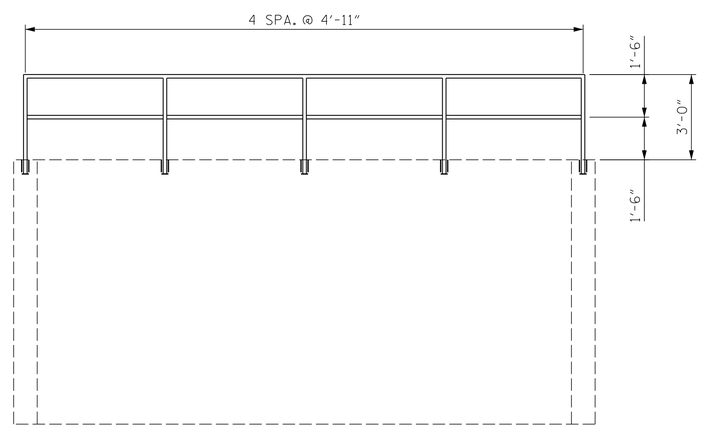


SOUTH WALL ELEVATION

RAIL POST SPACING

PROJECT NO. 49218.1

CUMBERLAND COUNTY

STATION: 17+00.00 -EL-

SHEET 4 OF 4

ENGINEER OF RECORD
1/30/2024

NORTH CAROLINA PROFESSIONAL SEAL 22072 ENGINEER JOHN ARTHUR DILWORTH

DocuSigned by:
6213822692284338

WETHERILL ENGINEERING
1223 Jones Franklin Rd.
Raleigh, N.C. 27606
Bus: 919 851 8077
Fax: 919 851 8107
LICENSE NO. F-0377

STATE OF NORTH CAROLINA
DEPARTMENT OF TRANSPORTATION
RALEIGH

RAIL POST FOR SOUTH JUNCTION BOX

| REVISIONS | | | | | | SHEET NO. |
|---|---|---|---|---|---|---|
| NO. | BY: | DATE: | NO. | BY: | DATE: | S-4 |
| 1 | | | 3 | | | TOTAL SHEETS |
| 2 | | | 4 | | | 7 |

DOCUMENT NOT CONSIDERED FINAL UNLESS ALL SIGNATURES COMPLETED

| | | | |
|---|---|---|---|
| DRAWN BY : | J. PENDERGRAFT | DATE : | 2-23 |
| CHECKED BY : | T. KOCH | DATE : | 2-23 |

P:\2020\20135.01 Div 6 Ft.Bragg C:\Structures\dgn\49218.1_SD_PLN.dgn
1/30/2024 10:49:55 AM

DocuSign Envelope ID: 781B57ED-9A32-4775-8BB1-ADE386EFF969

NOTE: 3" Ø WEEP HOLES INDICATED TO BE IN ACCORDANCE WITH THE SPECIFICATIONS.

FOR WING DETAILS SEE SHEET 2 OF 3

FOR OTHER DESIGN DATA AND NOTES, SEE SHEET 3 OF 3.

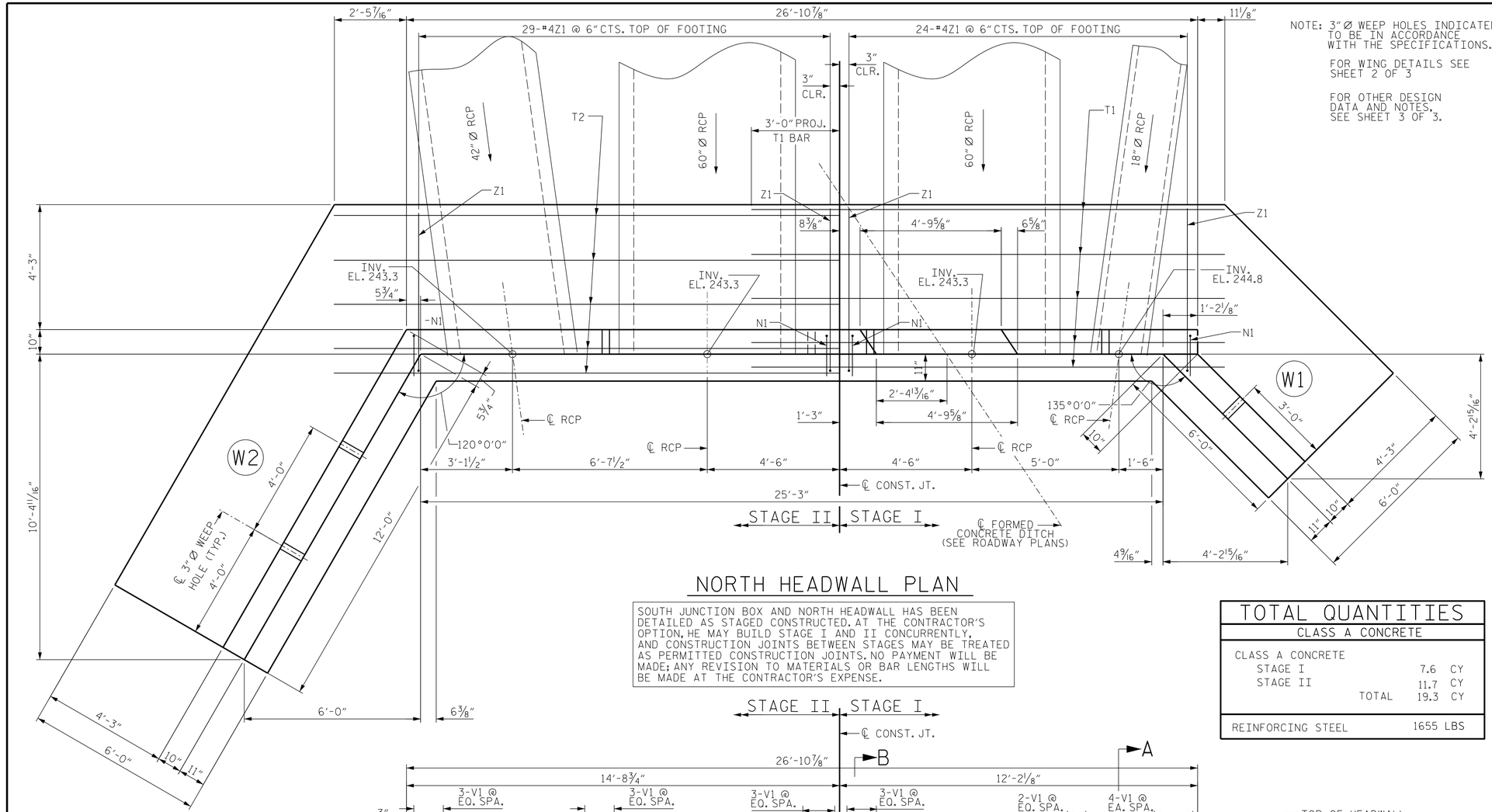


## NORTH HEADWALL PLAN

SOUTH JUNCTION BOX AND NORTH HEADWALL HAS BEEN DETAILED AS STAGED CONSTRUCTED. AT THE CONTRACTOR'S OPTION, HE MAY BUILD STAGE I AND II CONCURRENTLY, AND CONSTRUCTION JOINTS BETWEEN STAGES MAY BE TREATED AS PERMITTED CONSTRUCTION JOINTS. NO PAYMENT WILL BE MADE; ANY REVISION TO MATERIALS OR BAR LENGTHS WILL BE MADE AT THE CONTRACTOR'S EXPENSE.

## TOTAL QUANTITIES

| CLASS A CONCRETE | | |
|---|---|---|
| CLASS A CONCRETE | | |
| STAGE I | 7.6 | CY |
| STAGE II | 11.7 | CY |
| TOTAL | 19.3 | CY |
| REINFORCING STEEL | 1655 | LBS |

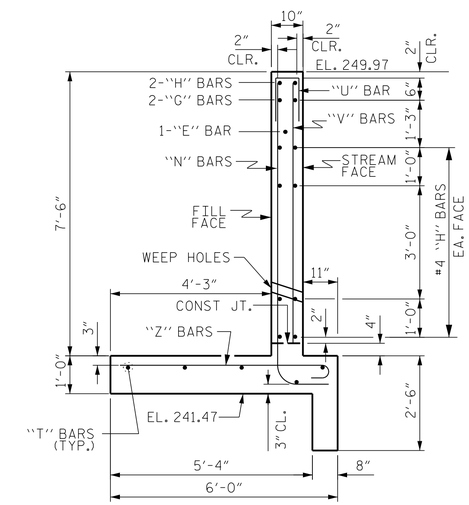


## SECTION A-A

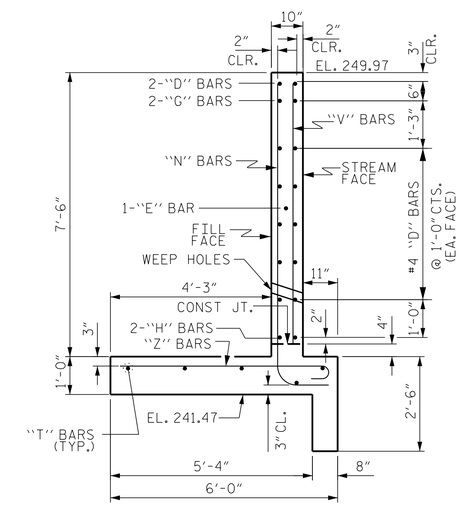


## SECTION B-B

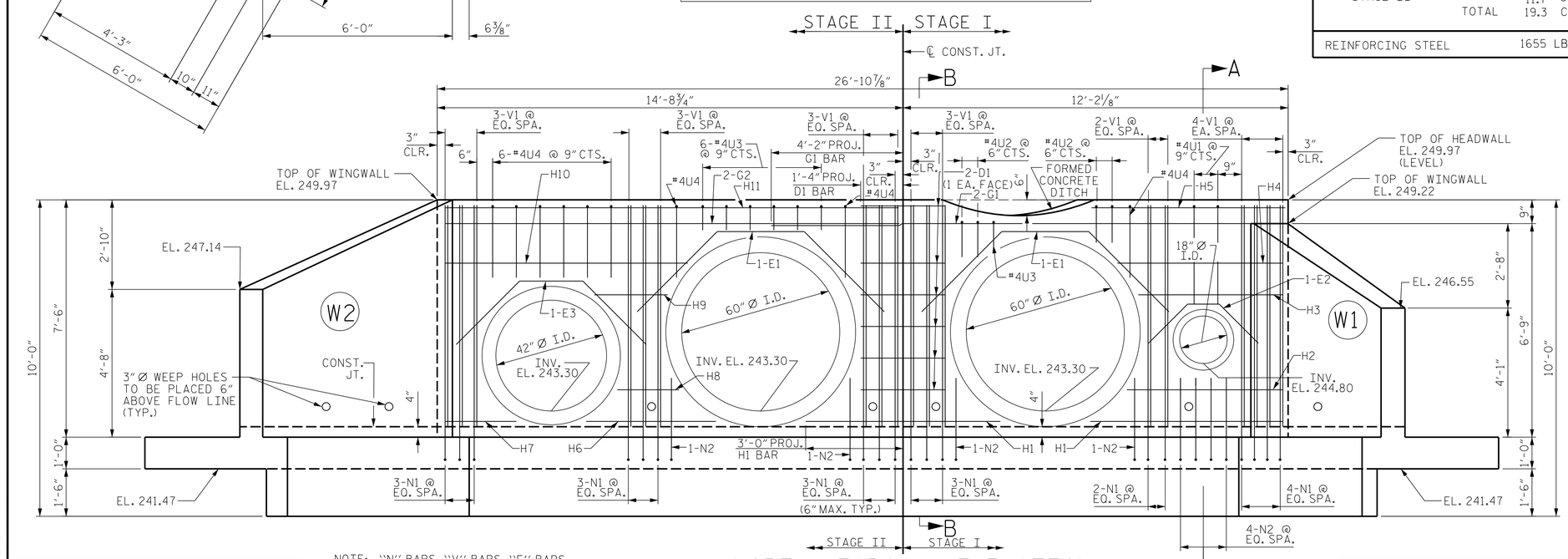


## NORTH HEADWALL ELEVATION

LOOKING UPSTREAM

NOTE: "N" BARS, "V" BARS, "E" BARS SHALL HAVE 2" MIN. CLR. FROM SIDE FACE OF RCP

PROJECT NO. 49218.1

CUMBERLAND COUNTY

STATION: 17+00.00 -EL-

SHEET 1 OF 3

ENGINEER OF RECORD
1/30/2024

NORTH CAROLINA PROFESSIONAL SEAL 22072 ENGINEER JOHN ARTHUR DILWORTH

DocuSigned by:
621383269228B4...

WETHERILL ENGINEERING
1223 Jones Franklin Rd.
Raleigh, N.C. 27606
Bus: 919 851 8077
Fax: 919 851 8107
LICENSE NO. F-0377

STATE OF NORTH CAROLINA
DEPARTMENT OF TRANSPORTATION
RALEIGH

NORTH HEADWALL

| REVISIONS | | | | | | SHEET NO. |
|---|---|---|---|---|---|---|
| NO. | BY: | DATE: | NO. | BY: | DATE: | S-5 |
| 1 | | | 3 | | | TOTAL SHEETS |
| 2 | | | 4 | | | 7 |

DRAWN BY : J. PENDERGRAFT DATE : 2-23
CHECKED BY : J. DILWORTH DATE : 2-23

DOCUMENT NOT CONSIDERED FINAL UNLESS ALL SIGNATURES COMPLETED

P:\2020\20135.01 Div 6 Ft.Bragg C+\Structures\dgn\49218.1_SD_PLN.dgn
1/30/2024 10:51:30 AM

DocuSign Envelope ID: 781B57ED-9A32-4775-8BB1-ADE386EFF969

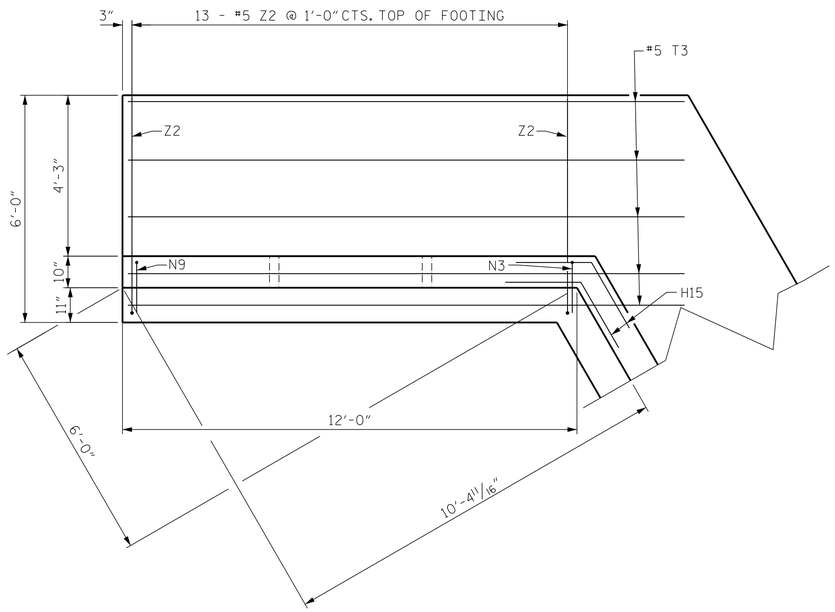


PLAN W2 (STAGE II)

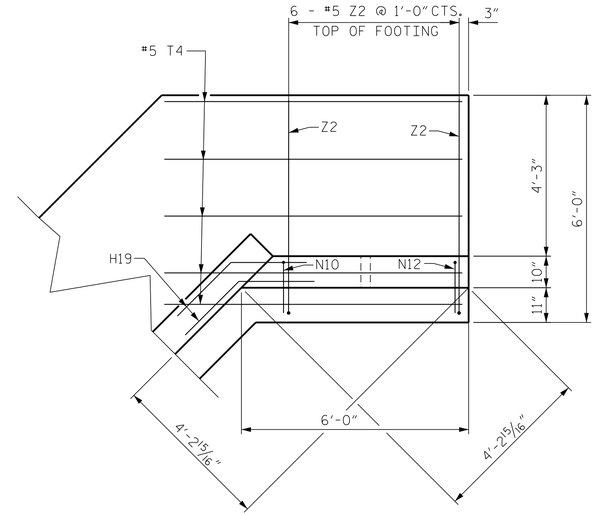


PLAN W1 (STAGE I)

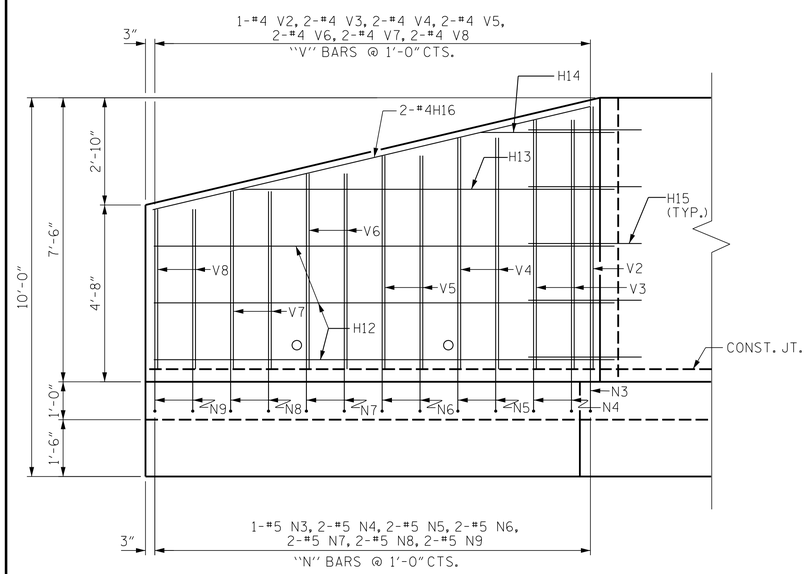


ELEVATION W2 (STAGE II)

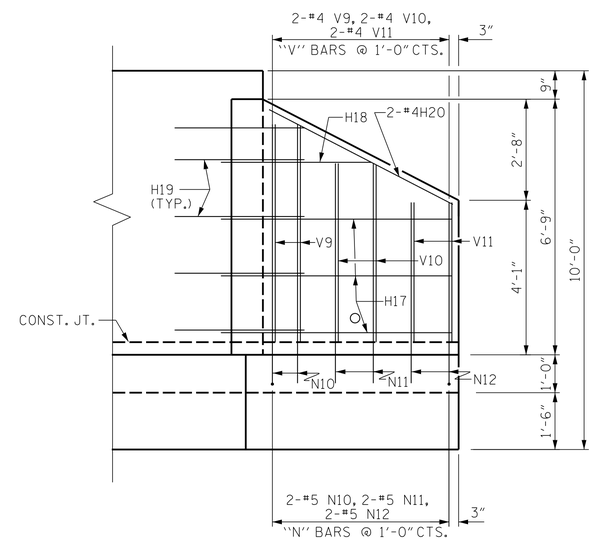


ELEVATION W1 (STAGE I)

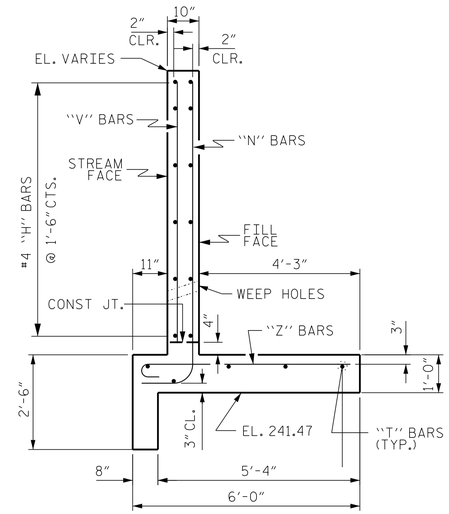


TYPICAL WING SECTION

PROJECT NO. 49218.1

CUMBERLAND COUNTY

STATION: 17+00.00 -EL-

SHEET 2 OF 3

ENGINEER OF RECORD
1/30/2024

NORTH CAROLINA PROFESSIONAL SEAL 22072 ENGINEER JOHN ARTHUR DILWORTH

DocuSigned by:
621382269228430...

ETHERILL ENGINEERING
1223 Jones Franklin Rd.
Raleigh, N.C. 27606
Bus: 919 851 8077
Fax: 919 851 8107
LICENSE NO. F-0377

STATE OF NORTH CAROLINA
DEPARTMENT OF TRANSPORTATION
RALEIGH

NORTH HEADWALL
WINGWALLS
W1 & W2

| REVISIONS | | | | | | SHEET NO. |
|---|---|---|---|---|---|---|
| NO. | BY: | DATE: | NO. | BY: | DATE: | S-6 |
| 1 | | | 3 | | | TOTAL SHEETS |
| 2 | | | 4 | | | 7 |

DOCUMENT NOT CONSIDERED FINAL UNLESS ALL SIGNATURES COMPLETED

DRAWN BY : J. PENDERGRAFT DATE : 2-23
CHECKED BY : J. DILWORTH DATE : 2-23

P:\2020\20135.01 Div 6 Ft.Bragg C+\Structures\dgn\49218.1_SD_PLW.dgn
1/30/2024 10:52:50 AM

DocuSign Envelope ID: 781B57ED-9A32-4775-8BB1-ADE386EFF969

## BILL OF MATERIAL

| BAR | NO. | SIZE | TYPE | LENGTH | WEIGHT |
|---|---|---|---|---|---|
| D1 | 12 | #4 | STR | 2'-8" | 21 |
| | | | | | |
| E1 | 2 | #6 | 6 | 9'-11" | 30 |
| E2 | 1 | #6 | 6 | 4'-6" | 7 |
| E3 | 1 | #6 | 6 | 7'-8" | 12 |
| | | | | | |
| G1 | 2 | #7 | STR | 16'-2" | 66 |
| G2 | 2 | #7 | STR | 14'-5" | 59 |
| | | | | | |
| H1 | 4 | #4 | STR | 6'-0" | 16 |
| H2 | 2 | #4 | STR | 4'-11" | 7 |
| H3 | 2 | #4 | STR | 4'-6" | 6 |
| H4 | 2 | #4 | STR | 5'-2" | 7 |
| H5 | 2 | #4 | STR | 5'-10" | 8 |
| H6 | 2 | #4 | STR | 4'-1" | 5 |
| H7 | 2 | #4 | STR | 2'-3" | 3 |
| H8 | 2 | #4 | STR | 1'-11" | 3 |
| H9 | 2 | #4 | STR | 2'-3" | 3 |
| H10 | 2 | #4 | STR | 7'-8" | 10 |
| H11 | 2 | #4 | STR | 14'-4" | 19 |
| H12 | 6 | #4 | STR | 12'-2" | 49 |
| H13 | 2 | #4 | STR | 9'-11" | 13 |
| H14 | 2 | #4 | STR | 3'-6" | 5 |
| H15 | 10 | #4 | 1 | 4'-0" | 27 |
| H16 | 2 | #4 | STR | 11'-10" | 16 |
| H17 | 6 | #4 | STR | 6'-1" | 24 |
| H18 | 2 | #4 | STR | 3'-11" | 5 |
| H19 | 10 | #4 | 2 | 4'-0" | 27 |
| H20 | 2 | #4 | STR | 5'-5" | 7 |
| | | | | | |
| N1 | 18 | #5 | 3 | 9'-3" | 174 |
| N2 | 8 | #5 | 3 | 3'-10" | 32 |
| N3 | 1 | #5 | 3 | 9'-2" | 10 |
| N4 | 2 | #5 | 3 | 8'-10" | 17 |
| N5 | 2 | #5 | 3 | 8'-5" | 18 |
| N6 | 2 | #5 | 3 | 7'-11" | 17 |
| N7 | 2 | #5 | 3 | 7'-5" | 15 |
| N8 | 2 | #5 | 3 | 6'-11" | 14 |
| N9 | 2 | #5 | 3 | 6'-6" | 14 |
| N10 | 2 | #5 | 3 | 8'-0" | 17 |
| N11 | 2 | #5 | 3 | 7'-0" | 15 |
| N12 | 2 | #5 | 3 | 6'-0" | 13 |
| | | | | | |
| | | | | | |
| T1 | 5 | #5 | STR | 16'-1" | 84 |
| T2 | 5 | #5 | STR | 17'-2" | 90 |
| T3 | 5 | #5 | STR | 14'-8" | 76 |
| T4 | 5 | #5 | STR | 7'-10" | 41 |
| | | | | | |
| U1 | 2 | #4 | 5 | 6'-9" | 9 |
| U2 | 4 | #4 | 5 | 2'-9" | 7 |
| U3 | 7 | #4 | 5 | 2'-1" | 10 |
| U4 | 9 | #4 | 5 | 5'-1" | 31 |
| | | | | | |
| V1 | 18 | #4 | STR | 7'-0" | 84 |
| V2 | 1 | #4 | STR | 6'-11" | 5 |
| V3 | 2 | #4 | STR | 6'-7" | 9 |
| V4 | 2 | #4 | STR | 6'-1" | 8 |
| V5 | 2 | #4 | STR | 5'-7" | 7 |
| V6 | 2 | #4 | STR | 5'-2" | 7 |
| V7 | 2 | #4 | STR | 4'-8" | 6 |
| V8 | 2 | #4 | STR | 4'-2" | 6 |
| V9 | 2 | #4 | STR | 5'-9" | 8 |
| V10 | 2 | #4 | STR | 4'-8" | 6 |
| V11 | 2 | #4 | STR | 3'-8" | 5 |
| | | | | | |
| Z1 | 53 | #4 | 4 | 6'-2" | 218 |
| Z2 | 19 | #5 | 4 | 6'-3" | 124 |

REINFORCING STEEL FOR STAGE 1 & 2 — 1655 LBS

CLASS A CONCRETE
- STAGE I — 7.6 CY
- STAGE II — 11.7 CY
- TOTAL — 19.3 CY

## NOTES:

1. FOR OTHER DESIGN DATA AND NOTES, SEE STANDARD NOTE SHEET.
2. FOR FALSEWORK AND FORMWORK, SEE SPECIAL PROVISIONS.
3. FOR SUBMITTAL OF WORKING DRAWINGS, SEE SPECIAL PROVISIONS.
4. FOR CRANE SAFETY, SEE SPECIAL PROVISIONS.
5. FOR GROUT FOR STRUCTURES, SEE SPECIAL PROVISIONS.

## BAR TYPES

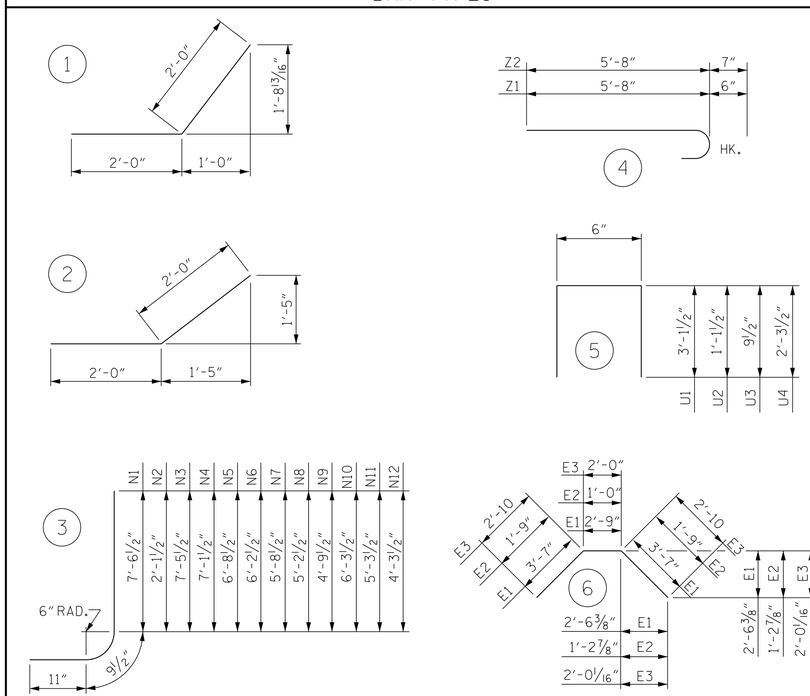


ALL BAR DIMENSIONS ARE OUT TO OUT.

PROJECT NO. 49218.1

CUMBERLAND COUNTY

STATION: 17+00.00 -EL-

SHEET 3 OF 3

ENGINEER OF RECORD
1/30/2024

NORTH CAROLINA PROFESSIONAL SEAL 22072 ENGINEER JOHN ARTHUR DILWORTH

DocuSigned by:
621382269228435...

WETHERILL ENGINEERING
1223 Jones Franklin Rd.
Raleigh, N.C. 27606
Bus: 919 851 8077
Fax: 919 851 8107
LICENSE NO. F-0377

STATE OF NORTH CAROLINA
DEPARTMENT OF TRANSPORTATION
RALEIGH

# BILL OF MATERIAL NORTH HEADWALL & WINGWALLS

| REVISIONS | | | | | | |
|---|---|---|---|---|---|---|
| NO. | BY: | DATE: | NO. | BY: | DATE: | |
| 1 | | | 3 | | | |
| 2 | | | 4 | | | |

SHEET NO. S-7

TOTAL SHEETS 7

DOCUMENT NOT CONSIDERED FINAL UNLESS ALL SIGNATURES COMPLETED

DRAWN BY : J. PENDERGRAFT DATE : 2-23
CHECKED BY : J. DILWORTH DATE : 2-23

P:\2020\20135.01_Div 6_Ft.Bragg_C-\Structures\dgn\49218.1_SD_PLN.dgn
1/30/2024 10:54:41 AM

DocuSign Envelope ID: 781B57ED-9A32-4775-8BB1-ADE386EFF969

# STANDARD NOTES

## DESIGN DATA:

| | |
|---|---|
| SPECIFICATIONS | A.A.S.H.T.O. (CURRENT) |
| LIVE LOAD | SEE PLANS |
| IMPACT ALLOWANCE | SEE A.A.S.H.T.O. |
| STRESS IN EXTREME FIBER OF STRUCTURAL STEEL - AASHTO M270 GRADE 36 | 20,000 LBS. PER SQ. IN. |
| - AASHTO M270 GRADE 50W | 27,000 LBS. PER SQ. IN. |
| - AASHTO M270 GRADE 50 | 27,000 LBS. PER SQ. IN. |
| REINFORCING STEEL IN TENSION - GRADE 60 | 24,000 LBS. PER SQ. IN. |
| CONCRETE IN COMPRESSION | 1,200 LBS. PER SQ. IN. |
| CONCRETE IN SHEAR | SEE A.A.S.H.T.O. |
| STRUCTURAL TIMBER - TREATED OR UNTREATED EXTREME FIBER STRESS | 1,800 LBS. PER SQ. IN. |
| COMPRESSION PERPENDICULAR TO GRAIN OF TIMBER | 375 LBS. PER SQ. IN. |
| EQUIVALENT FLUID PRESSURE OF EARTH | 30 LBS. PER CU. FT. (MINIMUM) |

## MATERIAL AND WORKMANSHIP:

EXCEPT AS MAY OTHERWISE BE SPECIFIED ON PLANS OR IN THE SPECIAL PROVISIONS, ALL MATERIAL AND WORKMANSHIP SHALL BE IN ACCORDANCE WITH THE 2018 "STANDARD SPECIFICATIONS FOR ROADS AND STRUCTURES" OF THE N. C. DEPARTMENT OF TRANSPORTATION.

STEEL SHEET PILING FOR PERMANENT OR TEMPORARY APPLICATIONS SHALL BE HOT ROLLED.

## CONCRETE:

UNLESS OTHERWISE REQUIRED ON PLANS, CLASS A CONCRETE SHALL BE USED FOR ALL PORTIONS OF ALL STRUCTURES WITH THE EXCEPTION THAT: CLASS AA CONCRETE SHALL BE USED IN BRIDGE SUPERSTRUCTURES, ABUTMENT BACKWALLS, AND APPROACH SLABS; AND CLASS B CONCRETE SHALL BE USED FOR SLOPE PROTECTION AND RIP RAP.

## CONCRETE CHAMFERS:

UNLESS OTHERWISE NOTED ON THE PLANS, ALL EXPOSED CORNERS ON STRUCTURES SHALL BE CHAMFERED 3/4" WITH THE FOLLOWING EXCEPTIONS: TOP CORNERS OF CURBS MAY BE ROUNDED TO 1 1/2" RADIUS WHICH IS BUILT INTO CURB FORMS; CORNERS OF TRANSVERSE FLOOR EXPANSION JOINTS SHALL BE ROUNDED WITH A 1/4" FINISHING TOOL UNLESS OTHERWISE REQUIRED ON PLANS; AND CORNERS OF EXPANSION JOINTS IN THE ROADWAY FACES AND TOPS OF CURBS AND SIDEWALKS SHALL BE ROUNDED TO A 1/4" RADIUS WITH A FINISHING STONE OR TOOL UNLESS OTHERWISE REQUIRED ON PLANS.

## DOWELS:

DOWELS WHEN INDICATED ON PLANS AS FOR CULVERT EXTENSIONS, SHALL BE EMBEDDED AT LEAST 12" INTO THE OLD CONCRETE AND GROUTED INTO PLACE WITH 1:2 CEMENT MORTAR.

## ALLOWANCE FOR DEAD LOAD DEFLECTION, SETTLEMENT, ETC. IN CASTING SUPERSTRUCTURES:

BRIDGES SHALL BE BUILT ON THE GRADE OR VERTICAL CURVE SHOWN ON PLANS. SLABS, CURBS AND PARAPETS SHALL CONFORM TO THE GRADE OR CURVE.

ALL DIMENSIONS WHICH ARE GIVEN IN SECTION AND ARE AFFECTED BY DEAD LOAD DEFLECTIONS ARE DIMENSIONS AT CENTER LINE OF BEARING UNLESS OTHERWISE NOTED ON PLANS. IN SETTING FORMS FOR STEEL BEAM BRIDGES AND PRESTRESSED CONCRETE GIRDER BRIDGES, ADJUSTMENTS SHALL BE MADE DUE TO THE DEAD LOAD DEFLECTIONS FOR THE ELEVATIONS SHOWN. WHERE BLOCKS ARE SHOWN OVER BEAMS FOR BUILDING UP TO THE SLAB, THE VERTICAL DIMENSIONS OF THE BLOCKS SHALL BE ADJUSTED BETWEEN BEARINGS TO COMPENSATE FOR DEAD LOAD DEFLECTIONS, VERTICAL CURVE ORDINATE, AND ACTUAL BEAM CAMBER. WHERE BOTTOM OF SLAB IS IN LINE WITH BOTTOM OF TOP FLANGES, DEPTH OF SLAB BETWEEN BEARINGS SHALL BE ADJUSTED TO COMPENSATE FOR DEAD LOAD DEFLECTION, VERTICAL CURVE ORDINATE, AND ACTUAL BEAM CAMBER.

IN SETTING FALSEWORK AND FORMS FOR REINFORCED CONCRETE SPANS, AN ALLOWANCE SHALL BE MADE FOR DEAD LOAD DEFLECTIONS, SETTLEMENT OF FALSEWORK, AND PERMANENT CAMBER WHICH SHALL BE PROVIDED FOR IN ADDITION TO THE ELEVATIONS SHOWN. AFTER REMOVAL OF THE FALSEWORK, THE FINISHED STRUCTURES SHALL CONFORM TO THE PROFILE AND ELEVATIONS SHOWN ON THE PLANS AND CONSTRUCTION ELEVATIONS FURNISHED BY THE ENGINEER.

DETAILED DRAWINGS FOR FALSEWORK OR FORMS FOR BRIDGE SUPERSTRUCTURE AND ANY STRUCTURE OR PARTS OF A STRUCTURE AS NOTED ON THE PLANS SHALL BE SUBMITTED TO THE ENGINEER FOR APPROVAL BEFORE CONSTRUCTION OF THE FALSEWORK OR FORMS IS STARTED.

## REINFORCING STEEL:

ALL REINFORCING STEEL SHALL BE DEFORMED. DIMENSIONS RELATIVE TO PLACEMENT OF REINFORCING ARE TO CENTERS OF BARS UNLESS OTHERWISE INDICATED IN THE PLANS. DIMENSIONS ON BAR DETAILS ARE TO CENTERS OF BARS OR ARE OUT TO OUT AS INDICATED ON PLANS.

WIRE BAR SUPPORTS SHALL BE PROVIDED FOR REINFORCING STEEL WHERE INDICATED ON THE PLANS. WHEN BAR SUPPORT PIECES ARE PLACED IN CONTINUOUS LINES, THEY SHALL BE SO PLACED THAT THE ENDS OF THE SUPPORTING WIRES SHALL BE LAPPED TO LOCK LEGS ON ADJOINING PIECES.

## STRUCTURAL STEEL:

AT THE CONTRACTOR'S OPTION, HE MAY SUBSTITUTE 7/8" Ø SHEAR STUDS FOR THE 3/4" Ø STUDS SPECIFIED ON THE PLANS. THIS SUBSTITUTION SHALL BE MADE AT THE RATE OF 3 - 7/8" Ø STUDS FOR 4 - 3/4" Ø STUDS, AND STUD SPACING CHANGES SHALL BE MADE AS NECESSARY TO PROVIDE THE SAME EQUIVALENT NUMBER OF 7/8" Ø STUDS ALONG THE BEAM AS SHOWN FOR 3/4" Ø STUDS BASED ON THE RATIO OF 3 - 7/8" Ø STUDS FOR 4 - 3/4" Ø STUDS. STUDS OF THE LENGTH SPECIFIED ON THE PLANS MUST BE PROVIDED. THE MAXIMUM SPACING SHALL BE 2'-0".

EXCEPT AT THE INTERIOR SUPPORTS OF CONTINUOUS BEAMS WHERE THE COVER PLATE IS IN CONTACT WITH BEARING PLATE, THE CONTRACTOR MAY, AT HIS OPTION, SUBSTITUTE FOR THE COVER PLATES DESIGNATED ON THE PLANS COVER PLATES OF THE EQUIVALENT AREA PROVIDED THESE PLATES ARE AT LEAST 5/16" IN THICKNESS AND DO NOT EXCEED A WIDTH EQUAL TO THE FLANGE WIDTH LESS 2" OR A THICKNESS EQUAL TO 2 TIMES THE FLANGE THICKNESS. THE SIZE OF FILLET WELDS SHALL CONFORM TO THE REQUIREMENTS OF THE CURRENT ANSI/AASHTO/AWS "BRIDGE WELDING CODE". ELECTROSLAG WELDING WILL NOT BE PERMITTED.

WITH THE SOLE EXCEPTION OF EDGES AT SURFACES WHICH BEAR ON OTHER SURFACES, ALL SHARP EDGES AND ENDS OF SHAPES AND PLATES SHALL BE SLIGHTLY ROUNDED BY SUITABLE MEANS TO A RADIUS OF APPROXIMATELY 1/16 INCH OR EQUIVALENT FLAT SURFACE AT A SUITABLE ANGLE PRIOR TO PAINTING, GALVANIZING, OR METALLIZING.

## HANDRAILS AND POSTS:

METAL STANDARDS AND FACES OF THE CONCRETE END POSTS FOR THE METAL RAIL SHALL BE SET NORMAL TO THE GRADE OF THE CURB, UNLESS OTHERWISE SHOWN ON PLANS. THE METAL RAIL AND TOPS OF CONCRETE POSTS USED WITH THE ALUMINUM RAIL SHALL BE BUILT PARALLEL TO THE GRADE OF THE CURB.

METAL HANDRAILS SHALL BE IN ACCORDANCE WITH THE PLANS. RAILS SHALL BE AS MANUFACTURED FOR BRIDGE RAILING. CASTINGS SHALL BE OF A UNIFORM APPEARANCE. FINS AND OTHER DEFORMATIONS RESULTING FROM CASTING OR OTHERWISE SHALL BE REMOVED IN A MANNER SO THAT A UNIFORM COLORING OF THE COMPLETED CASTING SHALL BE OBTAINED. CASTINGS WITH DISCOLORATIONS OR OF NON-UNIFORM COLORING WILL NOT BE ACCEPTED. CERTIFIED MILL REPORTS ARE REQUIRED FOR METAL RAILS AND POSTS.

## SPECIAL NOTES:

GENERALLY, IN CASE OF DISCREPANCY, THIS STANDARD SHEET OF NOTES SHALL GOVERN OVER THE SPECIFICATIONS, BUT THE REMAINDER OF THE PLANS SHALL GOVERN OVER NOTES HEREON, AND SPECIAL PROVISIONS SHALL GOVERN OVER ALL. SEE SPECIFICATIONS ARTICLE 105-4.

ENGLISH

JANUARY, 1990

STD. NO. SN