09/08/99

TIP PROJECT: B-5709

CONTRACT: DF00156

See Sheet 1A For Index of Sheets
See Sheet 1B For Conventional Symbols
See Sheet 1C Survey Control Sheet

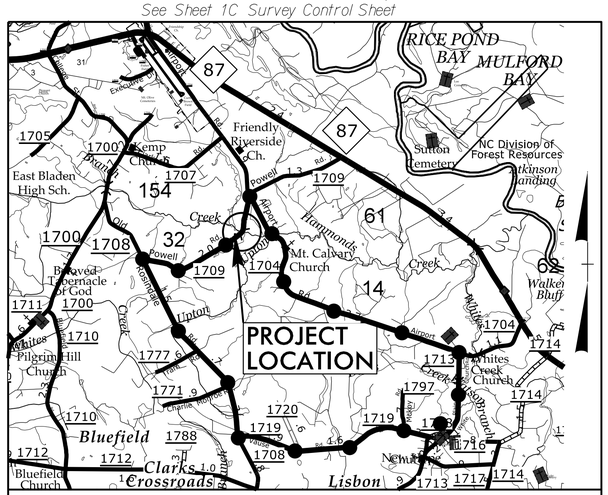

VICINITY MAP N.T.S.

DENOTES OFF-SITE DETOUR

STATE OF NORTH CAROLINA
DIVISION OF HIGHWAYS

BLADEN COUNTY

STATE	STATE PROJECT REFERENCE NO.	SHEET NO.	TOTAL SHEETS
N.C.	B-5709	1	

STATE PROJ. NO.	F.A. PROJ. NO.	DESCRIPTION
45663.1.1		PE
45663.2.1		R/W & UTILITIES
45663.3.1		CONST

LOCATION: BRIDGE NO. 080154 OVER HAMMOND CREEK ON SR 1709 (COLEY ROAD)

TYPE OF WORK: GRADING, DRAINAGE, PAVING, AND STRUCTURE

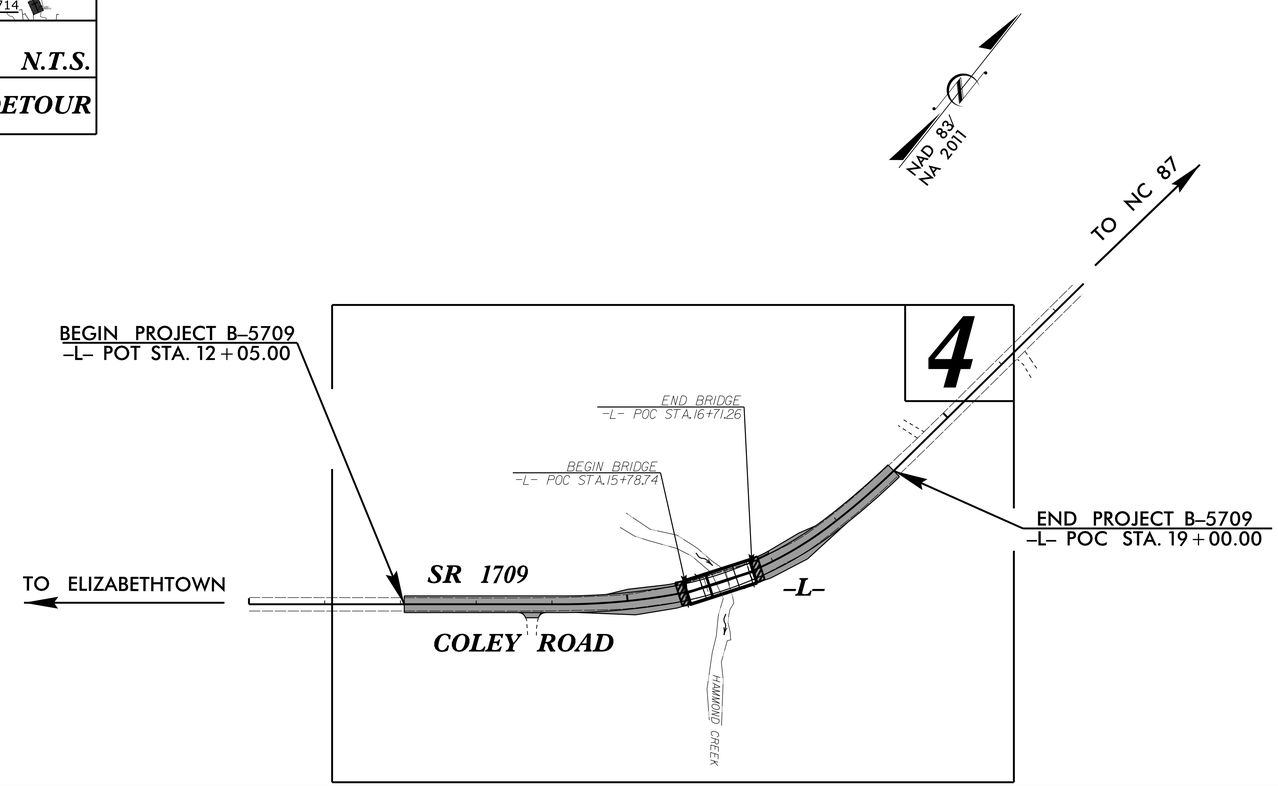

DOCUMENT NOT CONSIDERED FINAL UNLESS ALL SIGNATURES COMPLETED

GRAPHIC SCALES

30 15 0 30 60
PLANS

50 25 0 50 100
PROFILE (HORIZONTAL)

10 5 0 10 20
PROFILE (VERTICAL)

DESIGN DATA

ADT 2016 = 140
ADT 2036 = 253
K = %
D = %
T = 6 % *
V = 40 MPH
* TTST = DUAL
FUNC CLASS = MINOR COLLECTOR
SUB REGIONAL TIER

PROJECT LENGTH

LENGTH ROADWAY TIP PROJECT B5709 = 0.114 MILES

LENGTH STRUCTURE TIP PROJECT B5709 = 0.018 MILES

TOTAL LENGTH TIP PROJECT B5709 = 0.132 MILES

CDM Smith
CDM Smith Inc.
5400 Glenwood Avenue
Suite 400
Raleigh, NC 27612-3228
NC COA No. F-1255

FOR THE NORTH CAROLINA DEPT. OF TRANSPORTATION

2012 STANDARD SPECIFICATIONS

RIGHT OF WAY DATE:
MARCH 14, 2017

LETTING DATE:
JUNE 21, 2017

DAVID J. CLODGO, P.E.
PROJECT ENGINEER

KIT PERSIANI, P.E.
PROJECT DESIGN ENGINEER

STEVE KENDALL, P.E.
PROJECT DESIGN ENGINEER

HYDRAULICS ENGINEER
5/4/2017
NORTH CAROLINA PROFESSIONAL SEAL 31025 ENGINEER KAREN HEFNER
DocuSigned by: Karen Hefner
SIGNATURE: P.E.

ROADWAY DESIGN ENGINEER
5/4/2017
NORTH CAROLINA PROFESSIONAL SEAL 035683 ENGINEER DAVID J. CLODGO
DocuSigned by: David Clodgo
SIGNATURE: P.E.

STATE OF NORTH CAROLINA DEPARTMENT OF TRANSPORTATION

Invalid expression
:\Roadway\Proj\B5709_Rdy_tsh.dgn
USER: CLODGODJ

PROJECT REFERENCE NO.	SHEET NO.
B-5709	1A

DOCUMENT NOT CONSIDERED FINAL UNLESS ALL SIGNATURES COMPLETED

ROADWAY DESIGN ENGINEER

NORTH CAROLINA PROFESSIONAL SEAL 035683 ENGINEER 8/4/2017 DOCUSIGNED BY: David Clodfelter

DD481DE87C3C4EC...

CDM Smith
CDM Smith Inc.
5400 Glenwood Avenue
Suite 400
Raleigh, NC 27612-3226
NC COA No. F-0412

INDEX OF SHEETS

GENERAL NOTES:

2012 SPECIFICATIONS
EFFECTIVE: 01-17-2012
REVISED: 01-24-2017

GRADE LINE:
GRADING AND SURFACING:

THE GRADE LINES SHOWN DENOTE THE FINISHED ELEVATION OF THE PROPOSED SURFACING AT GRADE POINTS SHOWN ON THE TYPICAL SECTIONS. GRADE LINES MAY BE ADJUSTED AT THEIR BEGINNING AND ENDING AND AT STRUCTURES AS DIRECTED BY THE ENGINEER IN ORDER TO SECURE A PROPER TIE-IN.

CLEARING:

CLEARING ON THIS PROJECT SHALL BE PERFORMED TO THE LIMITS ESTABLISHED BY METHOD III.

SUPERELEVATION:

ALL CURVES ON THIS PROJECT SHALL BE SUPERELEVATED IN ACCORDANCE WITH STD. NO. 225.04 USING THE RATE OF SUPERELEVATION AND RUNOFF SHOWN ON THE PLANS. SUPERELEVATION IS TO BE REVOLVED ABOUT THE GRADE POINTS SHOWN ON THE TYPICAL SECTIONS.

SHOULDER CONSTRUCTION:

ASPHALT, EARTH, AND CONCRETE SHOULDER CONSTRUCTION ON THE HIGH SIDE OF SUPERELEVATED CURVES SHALL BE IN ACCORDANCE WITH STD. NO. 560.01

SIDE ROADS:

THE CONTRACTOR WILL BE REQUIRED TO DO ALL NECESSARY WORK TO PROVIDE SUITABLE CONNECTIONS WITH ALL ROADS, STREETS, AND DRIVES ENTERING THIS PROJECT. THIS WORK WILL BE PAID FOR AT THE CONTRACT UNIT PRICE FOR THE PARTICULAR ITEMS INVOLVED.

GUARDRAIL:

THE GUARDRAIL LOCATIONS SHOWN ON THE PLANS MAY BE ADJUSTED DURING CONSTRUCTION AS DIRECTED BY THE ENGINEER. THE CONTRACTOR SHOULD CONSULT WITH THE ENGINEER PRIOR TO ORDERING GUARDRAIL MATERIAL.

TEMPORARY SHORING:

SHORING REQUIRED FOR THE MAINTENANCE OF TRAFFIC WILL BE PAID FOR AS "EXTRA WORK" IN ACCORDANCE WITH SECTION 104-7.

SUBSURFACE PLANS:

NO SUBSURFACE PLANS ARE AVAILABLE ON THIS PROJECT. THE CONTRACTOR SHOULD MAKE HIS OWN INVESTIGATION AS TO THE SUBSURFACE CONDITIONS.

END BENTS:

THE ENGINEER SHALL CHECK THE STRUCTURE END BENT PLANS, DETAILS, AND CROSS-SECTION PRIOR TO SETTING OF THE SLOPE STAKES FOR THE EMBANKMENT OR EXCAVATION APPROACHING A BRIDGE.

UTILITIES:
UTILITY OWNERS ON THIS PROJECT ARE FOUR COUNTY EMC, STAR COMMUNICATIONS, AND BLADEN COUNTY WATER.

ANY RELOCATION OF EXISTING UTILITIES WILL BE ACCOMPLISHED BY OTHERS.

RIGHT-OF-WAY MARKERS:

ALL RIGHT-OF-WAY MARKERS ON THIS PROJECT SHALL BE PLACED BY OTHERS.

EFF. 01-17-2012
REV. 02-29-2016

2012 ROADWAY ENGLISH STANDARD DRAWINGS

The following Roadway Standards as appear in "Roadway Standard Drawings" Highway Design Branch - N. C. Department of Transportation - Raleigh, N. C., Dated January, 2012 are applicable to this project and by reference hereby are considered a part of these plans:

STD.NO.	TITLE
DIVISION 2 - EARTHWORK	
200.03	Method of Clearing - Method III
225.02	Guide for Grading Subgrade - Secondary and Local
225.04	Method of Obtaining Superelevation - Two Lane Pavement
DIVISION 3 - PIPE CULVERTS	
300.01	Method of Pipe Installation
DIVISION 4 - MAJOR STRUCTURES	
422.11	Bridge Approach Fills - Sub Regional Tier
DIVISION 5 - SUBGRADE, BASES AND SHOULDERS	
560.01	Method of Shoulder Construction - High Side of Superelevated Curve - Method I
DIVISION 6 - ASPHALT BASES AND PAVEMENTS	
654.01	Pavement Repairs
DIVISION 8 - INCIDENTALS	
838.01	Concrete Endwall for Single and Double Pipe Culverts - 15" thru 48" Pipe 90 Skew
838.11	Brick Endwall for Single and Double Pipe Culverts - 15" thru 48" Pipe 90 Skew
840.17	Concrete Grated Drop Inlet Type 'A' - 12" thru 72" Pipe
840.20	Frames and Wide Slot Flat Grates
840.25	Anchorage for Frames - Brick or Concrete or Precast
840.26	Brick Grated Drop Inlet Type 'A' - 12" thru 72" Pipe
840.45	Precast Drainage Structure
840.66	Drainage Structure Steps
846.01	Concrete Curb, Gutter and Curb & Gutter
846.04	Drop Inlet Installation in Shoulder Berm Gutter
862.01	Guardrail Placement
862.02	Guardrail Installation
876.01	Rip Rap in Channels
876.02	Guide for Rip Rap at Pipe Outlets
876.04	Drainage Ditches with Class 'B' Rip Rap

04/06/15

PROJECT REFERENCE NO.	SHEET NO.
B-5709	1B

STATE OF NORTH CAROLINA, DIVISION OF HIGHWAYS

CONVENTIONAL PLAN SHEET SYMBOLS

Note: Not to Scale **S.U.E. = Subsurface Utility Engineering*

BOUNDARIES AND PROPERTY:

- State Line
- County Line
- Township Line
- City Line
- Reservation Line
- Property Line
- Existing Iron Pin — EIP
- Property Corner
- Property Monument — ECM
- Parcel/Sequence Number — 123
- Existing Fence Line
- Proposed Woven Wire Fence
- Proposed Chain Link Fence
- Proposed Barbed Wire Fence
- Existing Wetland Boundary — WLB
- Proposed Wetland Boundary — WLB
- Existing Endangered Animal Boundary — EAB
- Existing Endangered Plant Boundary — EPB
- Existing Historic Property Boundary — HPB
- Known Contamination Area: Soil
- Potential Contamination Area: Soil
- Known Contamination Area: Water
- Potential Contamination Area: Water
- Contaminated Site: Known or Potential

BUILDINGS AND OTHER CULTURE:

- Gas Pump Vent or U/G Tank Cap
- Sign — S
- Well — W
- Small Mine
- Foundation
- Area Outline
- Cemetery
- Building
- School
- Church
- Dam

HYDROLOGY:

- Stream or Body of Water
- Hydro, Pool or Reservoir
- Jurisdictional Stream — JS
- Buffer Zone 1 — BZ 1
- Buffer Zone 2 — BZ 2
- Flow Arrow
- Disappearing Stream
- Spring
- Wetland
- Proposed Lateral, Tail, Head Ditch — FLOW
- False Sump

RAILROADS:

- Standard Gauge — CSX TRANSPORTATION
- RR Signal Milepost — MILEPOST 35
- Switch — SWITCH
- RR Abandoned
- RR Dismantled

RIGHT OF WAY:

- Baseline Control Point
- Existing Right of Way Marker
- Existing Right of Way Line
- Proposed Right of Way Line — RW
- Proposed Right of Way Line with Iron Pin and Cap Marker — RW
- Proposed Right of Way Line with Concrete or Granite R/W Marker — RW
- Proposed Control of Access Line with Concrete C/A Marker — CA
- Existing Control of Access — CA
- Proposed Control of Access — CA
- Existing Easement Line — E
- Proposed Temporary Construction Easement — E
- Proposed Temporary Drainage Easement — TDE
- Proposed Permanent Drainage Easement — PDE
- Proposed Permanent Drainage / Utility Easement — DUE
- Proposed Permanent Utility Easement — PUE
- Proposed Temporary Utility Easement — TUE
- Proposed Aerial Utility Easement — AUE
- Proposed Permanent Easement with Iron Pin and Cap Marker

ROADS AND RELATED FEATURES:

- Existing Edge of Pavement
- Existing Curb
- Proposed Slope Stakes Cut — C
- Proposed Slope Stakes Fill — F
- Proposed Curb Ramp — CR
- Existing Metal Guardrail
- Proposed Guardrail
- Existing Cable Guiderail
- Proposed Cable Guiderail
- Equality Symbol
- Pavement Removal

VEGETATION:

- Single Tree
- Single Shrub
- Hedge
- Woods Line
- Orchard
- Vineyard — Vineyard

EXISTING STRUCTURES:

MAJOR:

- Bridge, Tunnel or Box Culvert — CONC
- Bridge Wing Wall, Head Wall and End Wall — CONC WW

MINOR:

- Head and End Wall — CONC HW
- Pipe Culvert
- Footbridge
- Drainage Box: Catch Basin, DI or JB — CB
- Paved Ditch Gutter
- Storm Sewer Manhole — S
- Storm Sewer — S

UTILITIES:

POWER:

- Existing Power Pole
- Proposed Power Pole
- Existing Joint Use Pole
- Proposed Joint Use Pole
- Power Manhole — P
- Power Line Tower
- Power Transformer
- U/G Power Cable Hand Hole
- H-Frame Pole
- U/G Power Line LOS B (S.U.E.*) — P
- U/G Power Line LOS C (S.U.E.*) — P
- U/G Power Line LOS D (S.U.E.*) — P

TELEPHONE:

- Existing Telephone Pole
- Proposed Telephone Pole
- Telephone Manhole — T
- Telephone Pedestal — T
- Telephone Cell Tower
- U/G Telephone Cable Hand Hole
- U/G Telephone Cable LOS B (S.U.E.*) — T
- U/G Telephone Cable LOS C (S.U.E.*) — T
- U/G Telephone Cable LOS D (S.U.E.*) — T
- U/G Telephone Conduit LOS B (S.U.E.*) — TC
- U/G Telephone Conduit LOS C (S.U.E.*) — TC
- U/G Telephone Conduit LOS D (S.U.E.*) — TC
- U/G Fiber Optics Cable LOS B (S.U.E.*) — T FO
- U/G Fiber Optics Cable LOS C (S.U.E.*) — T FO
- U/G Fiber Optics Cable LOS D (S.U.E.*) — T FO

WATER:

- Water Manhole — W
- Water Meter
- Water Valve
- Water Hydrant
- U/G Water Line LOS B (S.U.E*) — W
- U/G Water Line LOS C (S.U.E*) — W
- U/G Water Line LOS D (S.U.E*) — W
- Above Ground Water Line — A/G Water

TV:

- TV Pedestal — C
- TV Tower
- U/G TV Cable Hand Hole — HH
- U/G TV Cable LOS B (S.U.E.*) — TV
- U/G TV Cable LOS C (S.U.E.*) — TV
- U/G TV Cable LOS D (S.U.E.*) — TV
- U/G Fiber Optic Cable LOS B (S.U.E.*) — TV FO
- U/G Fiber Optic Cable LOS C (S.U.E.*) — TV FO
- U/G Fiber Optic Cable LOS D (S.U.E.*) — TV FO

GAS:

- Gas Valve
- Gas Meter
- U/G Gas Line LOS B (S.U.E.*) — G
- U/G Gas Line LOS C (S.U.E.*) — G
- U/G Gas Line LOS D (S.U.E.*) — G
- Above Ground Gas Line — A/G Gas

SANITARY SEWER:

- Sanitary Sewer Manhole
- Sanitary Sewer Cleanout
- U/G Sanitary Sewer Line — SS
- Above Ground Sanitary Sewer — A/G Sanitary Sewer
- SS Forced Main Line LOS B (S.U.E.*) — FSS
- SS Forced Main Line LOS C (S.U.E.*) — FSS
- SS Forced Main Line LOS D (S.U.E.*) — FSS

MISCELLANEOUS:

- Utility Pole
- Utility Pole with Base
- Utility Located Object
- Utility Traffic Signal Box — S
- Utility Unknown U/G Line LOS B (S.U.E.*) — ?UTL
- U/G Tank; Water, Gas, Oil
- Underground Storage Tank, Approx. Loc. — UST
- A/G Tank; Water, Gas, Oil
- Geoenvironmental Boring
- U/G Test Hole LOS A (S.U.E.*)
- Abandoned According to Utility Records — AATUR
- End of Information — E.O.I.

PROJECT REFERENCE NO.	SHEET NO.
B-5709	1C-1
Location and Surveys	

SURVEY CONTROL SHEET B-5709

L

TYPE	STATION	NORTH	EAST
POT	10+00.00	298318.1233	2131868.0220
PC	14+15.13	298575.9752	2132193.3582
PCC	15+55.46	298671.9700	2132295.4914
PCC	17+92.17	298878.9651	2132405.3983
PT	19+10.13	298994.8807	2132426.8842
POT	22+51.95	299334.1472	2132468.6440

BL

POINT	DESC.		NORTH	EAST	ELEVATION	L STATION	OFFSET
1	B-5709	BL1	298426.0762	2132027.0928	51.88	11+91.72	14.20 RT
2	B-5709	BL2	298763.4739	2132378.7941	52.58	16+76.43	16.30 RT
3	B-5709	BL3	299195.8110	2132464.0100	54.28	21+14.09	12.30 RT
4	B-5709	BL4	299812.8360	2132540.8040	64.87	OUTSIDE PROJECT LIMITS	

BM1 ELEVATION = 53.82
N 299130 E 2132501
L STATION 20+53.00 57 RIGHT
R/R SPIKE IN BASE OF 12 INCH PINE TREE

FINAL EASEMENT MARKER IRON PIN AND CAP-E

ALIGN	STATION	OFFSET	NORTH	EAST
L	12+15.00	-40.00	298483.01608	2132011.67217
L	12+15.00	-30.00	298475.17907	2132017.88355
L	13+87.00	-40.00	298589.85184	2132146.46875

FINAL ROW MARKER IRON PIN AND CAP-E

ALIGN	STATION	OFFSET	NORTH	EAST
L	13+87.00	-66.00	298610.22807	2132130.31916
L	13+87.00	-30.00	298582.01483	2132152.68014
L	17+73.00	-66.00	298878.93207	2132337.03696
L	17+73.00	-29.65	298868.76003	2132371.93782
L	17+74.00	30.36	298852.99056	2132429.84132
L	17+74.00	65.00	298843.36563	2132463.12029
L	14+15.13	-66.00	298627.69946	2132152.36313
L	15+55.46	65.00	298628.52004	2132343.83497
L	15+55.46	-66.00	298716.08845	2132246.40411
L	15+55.46	55.00	298635.20465	2132336.39750
L	14+50.00	55.00	298556.56508	2132256.16274
L	14+50.00	30.13	298575.39035	2132239.91443

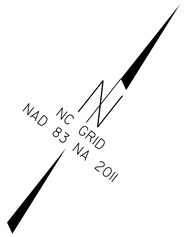

NCDOT BASELINE STATION (B-5709 BL-3)
LOCALIZED PROJECT COORDINATES
N=299195.8110
E=2132464.0100
ELEV=54.28'

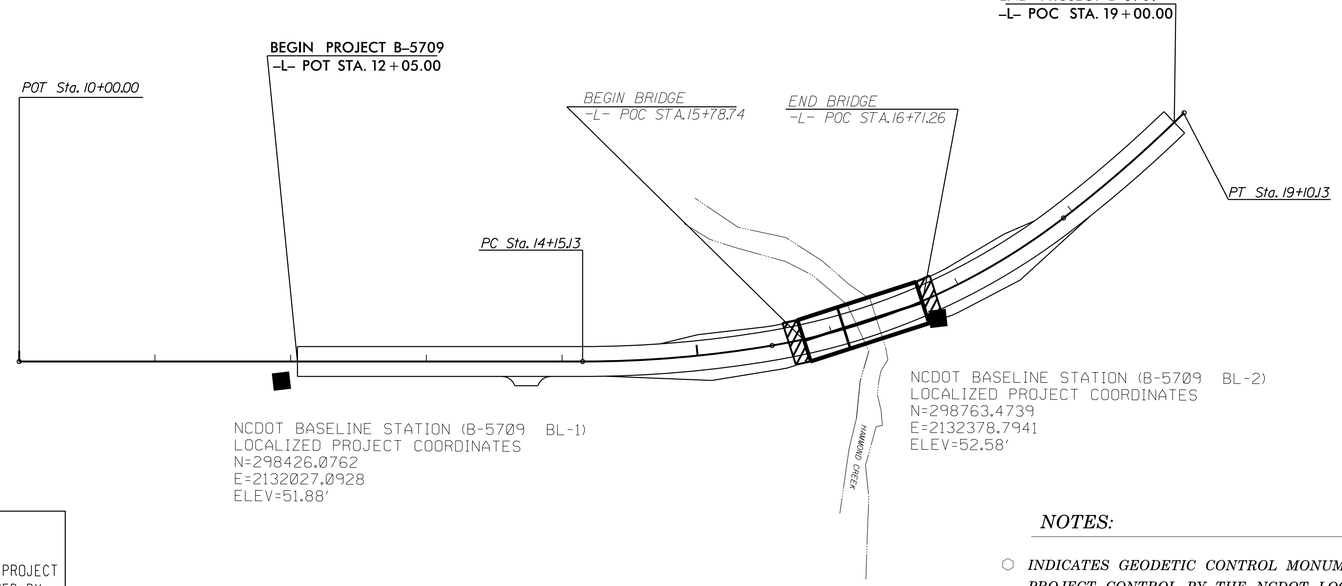

NCDOT BASELINE STATION (B-5709 BL-1)
LOCALIZED PROJECT COORDINATES
N=298426.0762
E=2132027.0928
ELEV=51.88'

NCDOT BASELINE STATION (B-5709 BL-2)
LOCALIZED PROJECT COORDINATES
N=298763.4739
E=2132378.7941
ELEV=52.58'

DATUM DESCRIPTION

THE LOCALIZED COORDINATE SYSTEM DEVELOPED FOR THIS PROJECT IS BASED ON THE STATE PLANE COORDINATES ESTABLISHED BY NCDOT FOR MONUMENT "B5709-3"
WITH NAD 83/NA 2011 STATE PLANE GRID COORDINATES OF
NORTHING: 299195.8110(ft) EASTING: 2132464.0100(ft)
ELEVATION: 54.2800(ft)
THE AVERAGE COMBINED GRID FACTOR USED ON THIS PROJECT (GROUND TO GRID) IS: 0.999945373
THE N.C. LAMBERT GRID BEARING AND LOCALIZED HORIZONTAL GROUND DISTANCE FROM "B5709-3" TO -L- STATION 10+00.00 IS
S55°50'14.48"W 192.24'
ALL LINEAR DIMENSIONS ARE LOCALIZED HORIZONTAL DISTANCES
VERTICAL DATUM USED IS NAVD 88

NOTE: DRAWING NOT TO SCALE

NOTES:

⬡ *INDICATES GEODETIC CONTROL MONUMENTS USED OR SET FOR HORIZONTAL AND VERTICAL PROJECT CONTROL BY THE NCDOT LOCATION AND SURVEYS UNIT. PROJECT CONTROL ESTABLISHED USING GNSS (GLOBAL NAVIGATION SATELLITE SYSTEM).*

THE CONTROL DATA FOR THIS PROJECT CAN BE FOUND ELECTRONICALLY BY SELECTING PROJECT CONTROL DATA AT:
HTTPS://CONNECT.NCDOT.GOV/RESOURCES/LOCATION/

THE FILES TO BE FOUND ARE AS FOLLOWS:
B5709_LS_CONTROL.TXT

SITE CALIBRATION INFORMATION HAS NOT BEEN PROVIDED FOR THIS PROJECT. IF FURTHER INFORMATION IS NEEDED, PLEASE CONTACT THE LOCATION AND SURVEYS UNIT.

PROJECT REFERENCE NO.	SHEET NO.
B-5709	2A-1

ROADWAY DESIGN ENGINEER
NORTH CAROLINA PROFESSIONAL SEAL 035683 ENGINEER DAVID J. CLODGO
5/5/2017
DocuSigned by: David Clodgo

PAVEMENT DESIGN ENGINEER
NORTH CAROLINA PROFESSIONAL SEAL 033296 ENGINEER STEVEN D. KENDALL
5/5/2017
DocuSigned by: Steve Kendall

CDM Smith — CDM Smith Inc. 5400 Glenwood Avenue Suite 400 Raleigh, NC 27612-3228 NC COA No. F-1255

NC DEPARTMENT OF TRANSPORTATION DIVISION 6 358 GILLESPIE STREET FAYETTEVILLE, NC 28301

DOCUMENT NOT CONSIDERED FINAL UNLESS ALL SIGNATURES COMPLETED

PAVEMENT SCHEDULE

(FINAL PAVEMENT DESIGN)

C1	PROP. APPROX. 3.0″ ASPHALT CONCRETE SURFACE COURSE TYPE SF9.5A, AT AN AVERAGE RATE OF 165 LBS. PER SQ. YD. IN EACH OF TWO LAYERS	T	EARTH MATERIAL.
C2	PROP. VAR. DEPTH ASPHALT CONCRETE SURFACE COURSE TYPE SF9.5A, AT AN AVERAGE RATE OF 110 LBS. PER SQ. YD. PER 1″ DEPTH. TO BEPLACED IN LAYERS NOT TO EXCEED 1.5″ IN DEPTH.	U	EXISTING PAVEMENT.
E1	PROP. APPROX. 4″ ASPHALT CONCRETE BASE COURSE TYPE B25.0B, AT AN AVERAGE RATE OF 456 LBS. PER SQ. YD.	V	MILLING BITUMINOUS PAVEMENT. 0″ TO 1.5″ DEPTH.
E2	PROP. VAR. DEPTH ASPHALT CONCRETE BASE COURSE, TYPE B25.0B, AT AN AVERAGE RATE OF 114 LBS. PER SQ. YD. PER 1″ DEPTH. TO BE PLACED IN LAYERS NOT LESS THAN 3″ IN DEPTH OR GREATER THAN 5.5″ IN DEPTH.	W	VARIABLE DEPTH ASPHALT PAVEMENT (SEE WEDGING DETAIL)

NOTE: PAVEMENT EDGE SLOPES ARE 1:1 UNLESS SHOWN OTHERWISE.

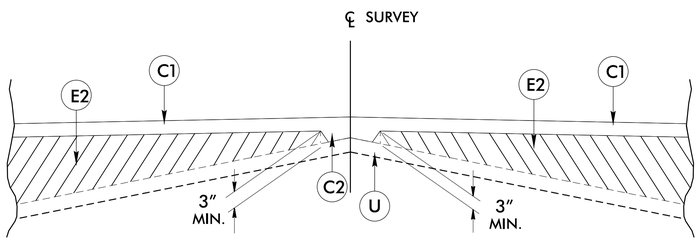

Detail Showing Method of Wedging

MILLING DETAIL
INCIDENTAL MILLING AT BEGIN/END FOR TIE–INS

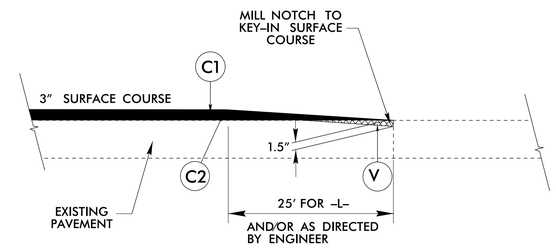

–L– STA. 12+05.00 AND STA. 19+00.00

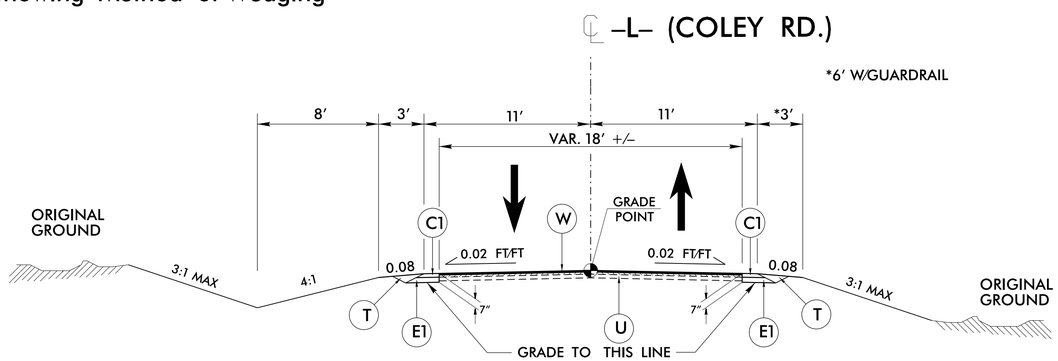

TYPICAL SECTION NO. 1

USE TYPICAL SECTION NO. 1

–L– STA. 12+05.00 TO 14+75.00
–L– STA. 17+21.26 TO 19+00.00

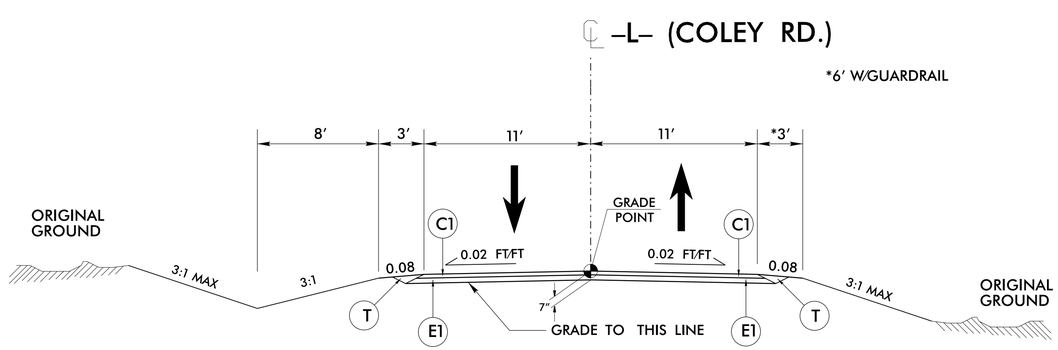

TYPICAL SECTION NO. 2

USE TYPICAL SECTION NO. 2

–L– STA. 14+75.00 TO 15+78.74 (BEGIN BRIDGE)
–L– STA. 16+71.26 (END BRIDGE) TO 17+21.26

PROJECT REFERENCE NO.	SHEET NO.
B-5709	2A-2

ROADWAY DESIGN ENGINEER	PAVEMENT DESIGN ENGINEER
NORTH CAROLINA PROFESSIONAL SEAL 035683 ENGINEER DAVID J. CLODGO	NORTH CAROLINA PROFESSIONAL SEAL 033296 ENGINEER STEVEN D. KENDALL
5/3/2017	5/3/2017
DocuSigned by: David Clodgo	DocuSigned by: Steve Kendall

CDM Smith
CDM Smith Inc.
5400 Glenwood Avenue
Suite 400
Raleigh, NC 27612-3228
NC COA No. F-1255

NC DEPARTMENT OF TRANSPORTATION
DIVISION 6
358 GILLESPIE STREET
FAYETTEVILLE, NC 28301

DOCUMENT NOT CONSIDERED FINAL UNLESS ALL SIGNATURES COMPLETED

PAVEMENT SCHEDULE	
C1	3.0" SF9.5A
C2	VAR. SF9.5A
E1	4.0" B25.0B
E2	VAR. B25.0B
T	EARTH MATERIAL
U	EXIST. PAVEMENT
V	0" - 3" MILLING
W	WEDGING

PAVEMENT EDGESLOPES 1:1 UNLESS NOTED OTHERWISE

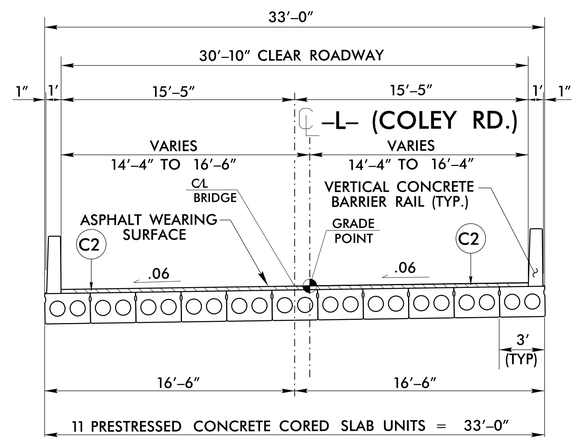

TYPICAL BRIDGE SECTION NO. 1

USE TYPICAL BRIDGE SECTION NO. 1

-L- STA. 15+78.74 TO 16+71.26

invgtd expr passlog
ISER: jrhodes
ifile: B5709_Rdy_typ.dgn

$$$$$$$SYSTIME$$$$$
$$$$$$$$$$$$$$$$$$DGN$$$$$$$$$$$$$$$$
$$$$USERNAME$$$$

STATE OF NORTH CAROLINA
DEPT. OF TRANSPORTATION
DIVISION OF HIGHWAYS
RALEIGH, N.C.

ENGLISH DETAIL DRAWING FOR
STRUCTURE ANCHOR UNITS
GUARDRAIL ANCHOR UNIT, TYPE III FOR ATTACHMENT TO RAIL ON BRIDGE - SUB REGIONAL TIER

SHEET 2 OF 7
862d03

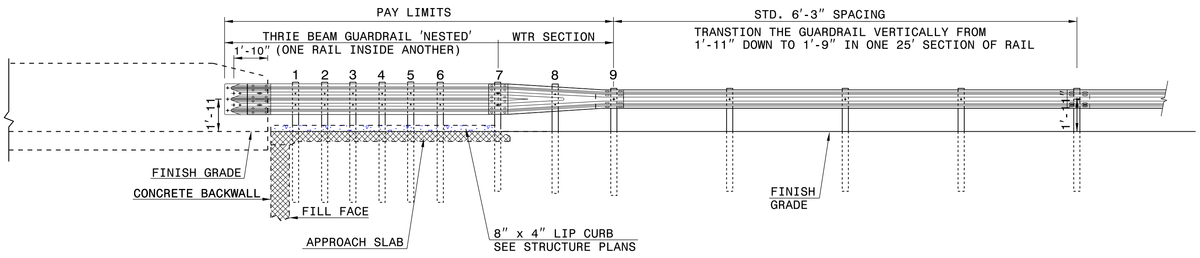

ELEVATION

NOTE:
**POST NOT REQUIRED FOR SKEW ANGLES GREATER THAN 150° OR LESS THAN 30° UNLESS OTHERWISE DIRECTED BY THE ENGINEER.
*THE DISTANCE FROM END OF BRIDGE RAIL TO CENTER LINE OF THE FIRST POST SHOULD BE 11½" IF CONCRETE BACKWALL IS NOT PRESENT.
-SHOULDER BERM GUTTER MUST BE INSTALLED TO THE LIMITS 8" x 4" LIP CURB IS SHOWN IF ANCHOR UNIT IS NOT ADJACENT TO AN APPROACH SLAB.
-MEASURE GUARDRAIL HEIGHT FROM THE TOP OF ADJACENT SURFACE (SHOULDER, BERM, OR GUTTER).
-LAP JOINTS IN THE DIRECTION OF TRAFFIC FLOW.
-SEE SHEET 5 FOR POST SECTIONS 1 THRU 9.

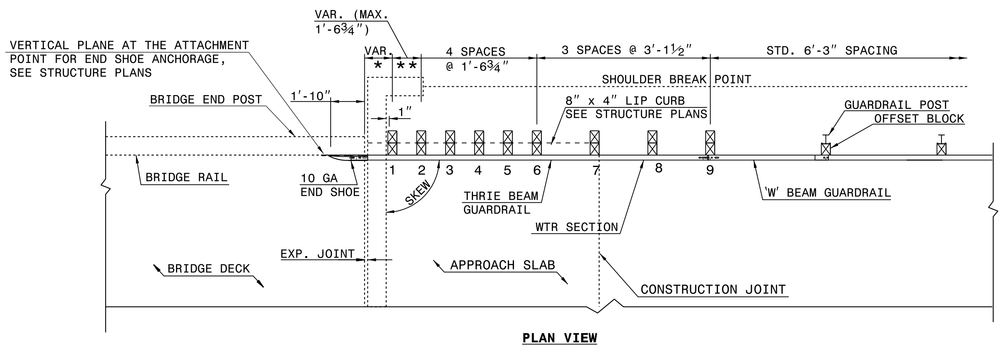

PLAN VIEW

GUARDRAIL ANCHOR UNIT, TYPE III FOR ATTACHMENT TO RAIL ON BRIDGE - SUB REGIONAL TIER

STATE OF NORTH CAROLINA
DEPT. OF TRANSPORTATION
DIVISION OF HIGHWAYS
RALEIGH, N.C.

ENGLISH DETAIL DRAWING FOR
STRUCTURE ANCHOR UNITS
GUARDRAIL ANCHOR UNIT, TYPE III FOR ATTACHMENT TO RAIL ON BRIDGE - SUB REGIONAL TIER

SHEET 2 OF 7
862d03

STATE OF NORTH CAROLINA
DEPT. OF TRANSPORTATION
DIVISION OF HIGHWAYS
RALEIGH, N.C.

ENGLISH DETAIL DRAWING FOR
STRUCTURE ANCHOR UNITS
GUARDRAIL ANCHOR UNIT, TYPE III

SHEET 3 OF 7
862d03

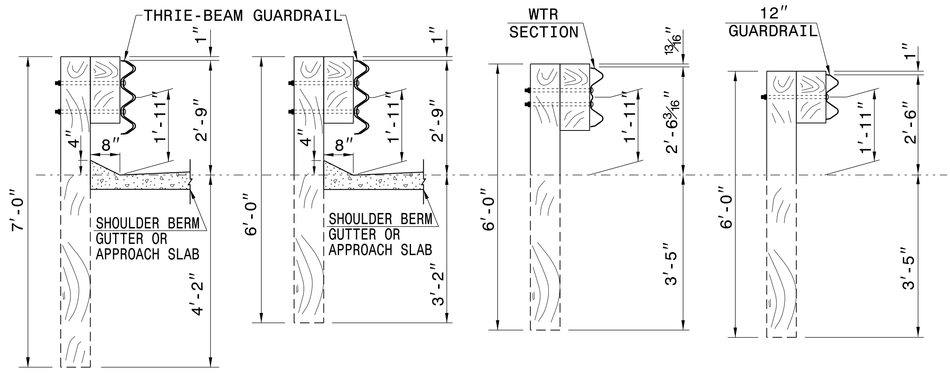

SECTION OF THRIE BEAM POSTS 1 THRU 6 | **SECTION OF THRIE BEAM POST 7** | **SECTION OF WTR BEAM POST 8** | **SECTION OF 'W' BEAM POST 9**

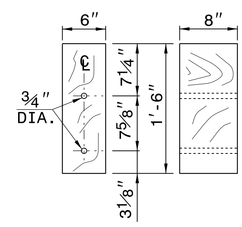

THRIE BEAM OFFSET BLOCK

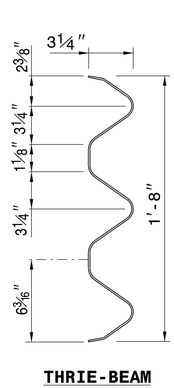

THRIE-BEAM SECTION

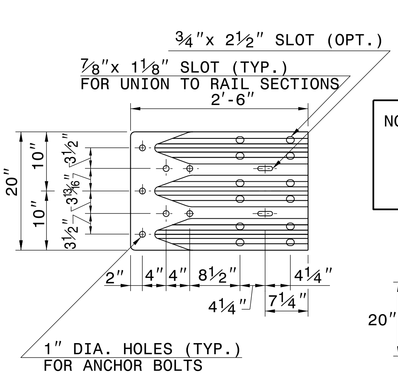

END SHOE

NOTE: THE MID POST AND OFFSET BLOCK OF THE WTR SECTION WILL REQUIRE SPECIAL BOLT HOLE DRILLING IN THE THRIE BEAM OFFSET BLOCK AND LINE POST.

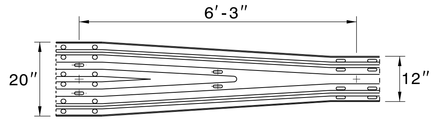

WTR SECTION
ELEVATION VIEW

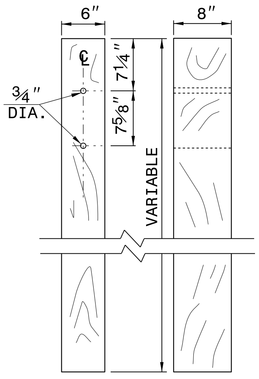

THRIE BEAM LINE POST

STATE OF NORTH CAROLINA
DEPT. OF TRANSPORTATION
DIVISION OF HIGHWAYS
RALEIGH, N.C.

ENGLISH DETAIL DRAWING FOR
STRUCTURE ANCHOR UNITS
GUARDRAIL ANCHOR UNIT, TYPE III

SHEET 3 OF 7
862d03

CONTRACT STANDARDS AND DEVELOPMENT UNIT
Office 919-707-6950 FAX 919-250-4119

SEE TITLE BLOCK

ORIGINAL BY: J. HOWERTON DATE: 06-22-12
MODIFIED BY: DATE:
CHECKED BY: DATE:
FILE SPEC.:

PROJECT REFERENCE NO. B-5709
SHEET NO. 2C-1

COMPUTED BY: K. PERSIANI DATE: 8/16/2016
CHECKED BY: D. CLODGO DATE: 8/16/2016

PROJECT REFERENCE NO.	SHEET NO.
B-5709	3B-1

STATE OF NORTH CAROLINA
DIVISION OF HIGHWAYS
LIST OF PIPES, ENDWALLS, ETC. (FOR PIPES 48" & UNDER)

STATION	LOCATION (LT, RT, OR CL)	STRUCTURE NO. FROM	STRUCTURE NO. TO	TOP ELEVATION	INVERT ELEVATION	INVERT ELEVATION	SLOPE CRITICAL	SIDE DRAIN PIPE (RCP, CSP, CAAP, HDPE, or PVC) 12"	15"	18"	24"	30"	36"	42"	48"	DO NOT USE RCP	DO NOT USE CSP	DO NOT USE CAAP	DO NOT USE HDPE	C.S. PIPE 12"	15"	18"	24"	30"	36"	42"	48"	R.C. PIPE CLASS III 12"	15"	18"	24"	30"	36"	42"	48"	R.C. PIPE CLASS IV 12"	15"	18"	24"	30"	36"	42"	48"
SIZE																																											
THICKNESS OR GAUGE																				.064	.064	.064	.064	.079	.079	.109	.109																
-L- 16+96.00	LT	0400		51.44																																							
		0400	0401		49.44	45.00			21																																		
-L- 12+25.00																																											
SHEET TOTALS									21																																		

STATION	48" WELDED STEEL (0.625" THICK) TRENCHLESS INSTALLATION	36" WELDED STEEL (0.625" THICK) TRENCHLESS INSTALLATION	**** RC PIPE CULVERTS, CONTRACTOR DESIGN	15" SIDE DRAIN PIPE	18" SIDE DRAIN PIPE	ENDWALLS STD. 838.01 OR STD. 838.11 (UNLESS NOTED OTHERWISE) CU. YARDS R.C.P.	C.S.P.	QUANTITIES FOR DRAINAGE STRUCTURES "TOTAL L.F. FOR PAY QUANTITY SHALL BE COL. "A" + (1.3 X COL. "B") PER EACH (0' THRU 5.0')	LIN. FT. A 5.0' THRU 10.0'	B 10.0' AND ABOVE	C.B. STD. 840.01 OR STD. 840.02	FRAME, GRATES, AND HOOD STANDARD 840.03 TYPE OF GRATE E	F	G	CONCRETE TRANSITIONAL SECTION DROP INLET	CATCH BASIN	D.I. STD. 840.14 OR STD. 840.15	D.I. FRAME AND GRATE STD. 840.16	G.D.I. TYPE "A" STD. 840.17 OR 840.26	G.D.I. TYPE "B" STD. 840.18 OR 840.27	G.D.I. TYPE "D" STD. 840.19 OR 840.28	G.D.I. FRAME WITH TWO GRATES STD. 840.20	G.D.I. FRAME WITH TWO GRATES STD. 840.22	G.D.I. (N.S.) FRAME WITH GRATE STD. 840.24	G.D.I. (N.S.) FRAME WITH TWO GRATES STD. 840.24	J.B. STD. 840.31 OR 840.32	T.B.J.D. STD. 840.34	T.B.J.D. STD. 840.46	M.H. FRAME AND COVER STD. 840.54	PARALLEL PIPE END SECTION STD. 310.02	OPEN THROAT CATCH BASIN STD. 840.04 OR 840.05	SPING BOX STD. 540.41	DRY DETENTION OUTLET CONTROL STR. SHEETS 2-BC AND 2-BE	T.B.G.D.I. STD. 840.36	T.B.D.I. FRAME WITH TWO GRATES STD. 840.37	ADJUST CB	ADJUST C.B.M.H.	CONVERT TO C.B.	SIDE DRAIN PIPE ELBOWS NO. & SIZE	CONC. & BRICK PIPE PLUG C.Y. STD. 840.71	CONC. COLLARS CL. "B" C.Y. STD. 840.72	PIPE REMOVAL LIN. FT.	REMARKS
-L- 16+96.00								1											1		1																						
-L- 12+25.00	55					4.9																																			53	REMOVE 48" CMP
SHEET TOTALS	55					4.9		1											1		1																					53	

ABBREVIATIONS

C.B.	CATCH BASIN
N.D.I.	NARROW DROP INLET
D.I.	DROP INLET
G.D.I.	GRATED DROP INLET
G.D.I. (N.S.)	GRATED DROP INLET (NARROW SLOT)
J.B.	JUNCTION BOX
M.H.	MANHOLE
T.B.D.I.	TRAFFIC BEARING DROP INLET
T.B.J.B.	TRAFFIC BEARING JUNCTION BOX

"N" = DISTANCE FROM EDGE OF LANE TO FACE OF GUARDRAIL.
TOTAL SHOULDER WIDTH = DISTANCE FROM EDGE OF TRAVEL LANE TO SHOULDER BREAK POINT.
FLARE LENGTH = DISTANCE FROM LAST SECTION OF PARALLEL GUARDRAIL TO END OF GUARDRAIL.
W = TOTAL WIDTH OF FLARE FROM BEGINNING OF TAPER TO END OF GUARDRAIL.
G = GATING IMPACT ATTENUATOR TYPE 350
NG = NON-GATING IMPACT ATTENUATOR TYPE 350

GUARDRAIL SUMMARY

SURVEY LINE	BEG. STA.	END STA.	LOCATION	LENGTH STRAIGHT	LENGTH SHOP CURVED	LENGTH DOUBLE FACED	WARRANT POINT APPROACH END	WARRANT POINT TRAILING END	"N" DIST. FROM E.O.L.	TOTAL SHOULDER WIDTH	FLARE LENGTH APPROACH END	FLARE LENGTH TRAILING END	W APPROACH END	W TRAILING END	ANCHORS XI MOD	XI	GRAU 350 TL-3	M-350	XIII	CAT-1	VI MOD	BIC	TYPE III	IMPACT ATTENUATOR TYPE 350 NO.	PERMITTED G	PERMITTED NG				REMARKS
-L-	15+03.49	15+78.49	LT.	75.00				15+78.49	3.33	6.33		50.00		1.00			1						1							
-L-	15+06.35	15+81.35	RT.	75.00			15+81.35		7.30	10.30	50.00		1.00				1						1							
-L-	16+71.51	17+46.51	LT.	75.00			16+71.51		3.45	6.45	50.00		1.00				1						1							
-L-	16+68.65	17+43.65	RT.	75.00				16+68.65	7.56	10.56		50.00		1.00			1						1							
			SUBTOTAL	300.00													4						4							
			TOTAL	25.00													4						4							
			SAY	25.00																										
		ADDITIONAL GUARDRAIL POSTS:		5																										

ANCHOR UNIT DEDUCTION
GRAU350 Type III: 4 @ 50.00 = 200.00
TYPE III: 4 @ 18.75 = 75.00
TOTAL: 275.00

SHOULDER BERM GUTTER

LINE	STATION	STATION	LOCATION	LENGTH
-L-	16+84	17+00	LT	16
			TOTAL	16
			SAY	20

BREAKING OF EXISTING ASPHALT PAVEMENT

LINE	STATION	STATION	LOCATION	SQUARE YARDS
-L-	14+75	15+29	CL	113.87
			TOTAL	113.87
			SAY	120

REMOVAL OF EXISTING ASPHALT PAVEMENT

LINE	STATION	STATION	LOCATION	SQUARE YARDS
-L-	15+29	15+77	CL	110.46
-L-	16+65	17+21	CL	128.21
			TOTAL	238.68
			SAY	240

Approximate quantities only. Unclassified Excavation, Borrow Excavation, Fine Grading, Clearing and Grubbing, and Removal of Existing Pavement will be paid for at the contract lump sum price for "Grading".

Earthwork quantities are calculated by the Roadway Design Unit. These earthwork quantities are based in part on subsurface data provided by the Geotechnical Engineering Unit.

SUMMARY OF EARTHWORK

STATION	STATION	UNCL. EXCAV.	EMBANK. +%	BORROW	WASTE
-L- 12+05.00	-L- 15+78.74 (BRIDGE)	150	623	473	
SUBTOTALS:		150	623	473	
-L- 16+71.26 (BRIDGE)	-L- 19+00.00	149	329	180	
SUBTOTALS:		149	329	180	
TOTAL		299	951	652	
MATERIAL FOR SHOULDER CONSTRUCTION					
LOSS DUE TO CLEARING AND GRUBBING					
WASTE IN LIEU OF BORROW					
PROJECT TOTALS:		299	951	652	
EST. 5% TO REPL. TOP SOIL ON BORROW PIT				32	
GRAND TOTALS:		299		684	
SAY:		300		700	

PROJECT REFERENCE NO.	SHEET NO.
B-5709	4
R/W SHEET NO.	

ROADWAY DESIGN ENGINEER: NORTH CAROLINA PROFESSIONAL SEAL 035683 ENGINEER DAVID J. CLOGGO — 5/4/2017 — David Cloggo

HYDRAULICS ENGINEER: NORTH CAROLINA PROFESSIONAL SEAL 31025 ENGINEER KAREN HEFNER — 5/4/2017 — Karen Hefner

CDM Smith — CDM Smith Inc, 5400 Glenwood Avenue Suite 400, Raleigh, NC 27612-3228, NC COA No. F-1255

MI Engineering, PLLC, 1011 Schaub Drive Suite 100, Raleigh, NC 27606, NC COA No.

DOCUMENT NOT CONSIDERED FINAL UNLESS ALL SIGNATURES COMPLETED

RIGHT OF WAY AREA DATA

PARCEL NUMBER	PROPERTY OWNERS NAMES	TOTAL AREA	AREA TAKEN	AREA REMAINING	CONST. EASEMENT	PERMANENT DRAINAGE EASEMENT	PERMANENT UTILITY EASEMENT
1	CYNTHIA C. THOMAS	94.19 Ac.	0.17 Ac.	94.02 Ac.		1,720.00 SF	
2	REBECCA C. WEAVER	118.92 Ac.	0.12 Ac.	118.80 Ac.			
3	KENNETH A. & JULIA ANDERSON	48.85 Ac.	0.13 Ac.	48.72 Ac.			
4	DONNA C. & GARY COLLINS	118.79 Ac.	0.13 Ac.	118.66 Ac.			

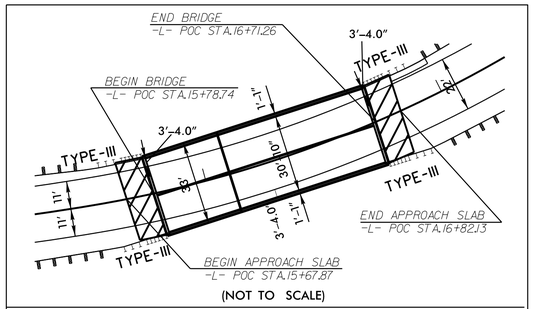

BRIDGE PAVEMENT RELATIONSHIP SKETCH

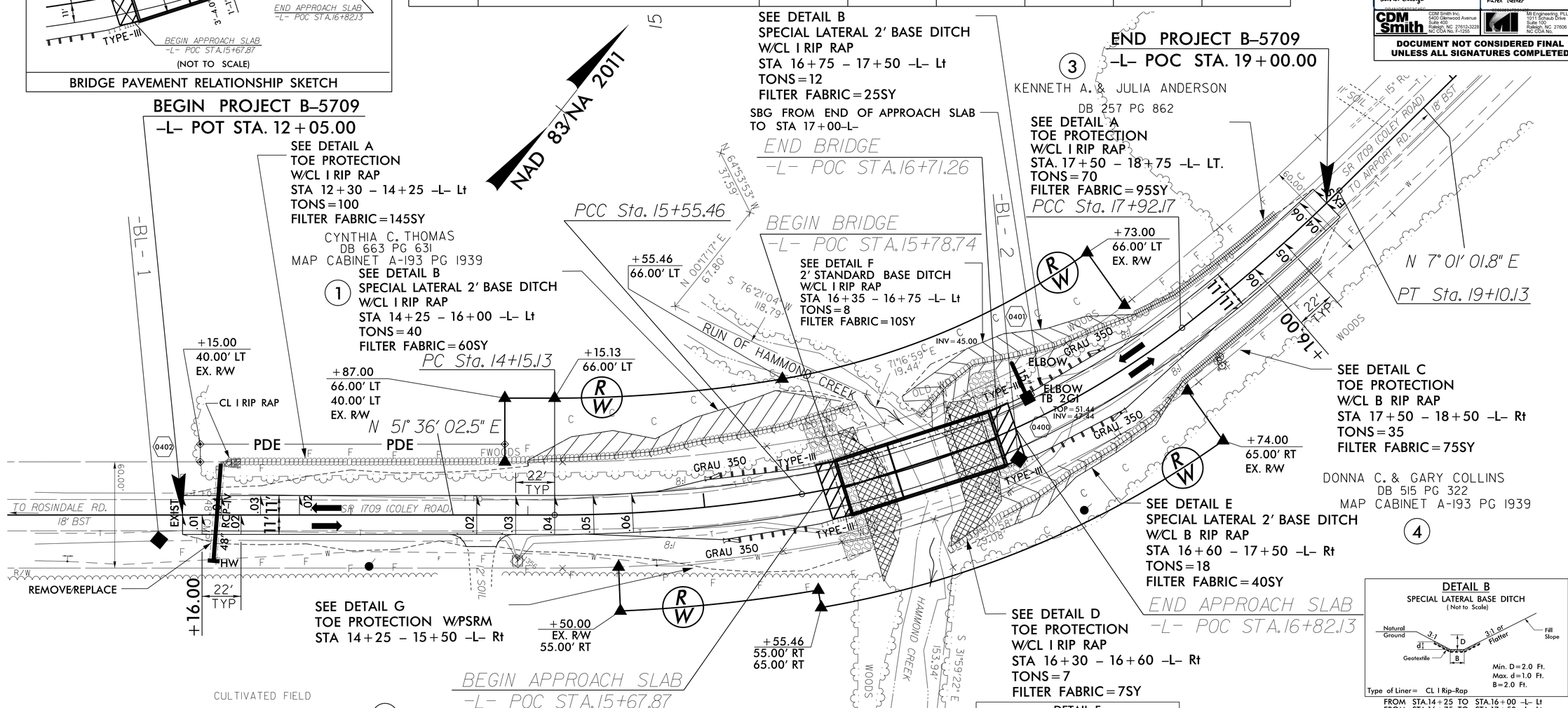

FROM STA.14+25 TO STA.16+00 -L- Lt
FROM STA.16+75 TO STA.17+50 -L- Lt

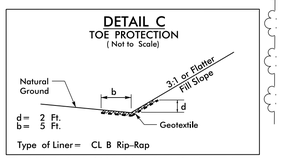

FROM STA. 17+50 TO STA. 18+50 -L- Rt

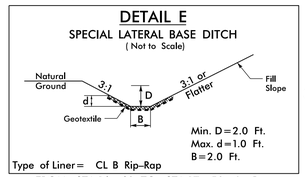

FROM STA.16+60 TO STA.17+50 -L- Rt

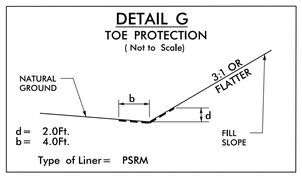

FROM STA. 14+25 TO STA. 15+50 -L- Rt

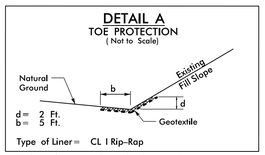

FROM STA. 12+30 TO STA. 14+25 -L- Lt.
FROM STA. 17+50 TO STA. 18+75 -L- Lt.

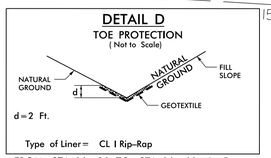

FROM STA. 16+30 TO STA. 16+60 -L- Rt

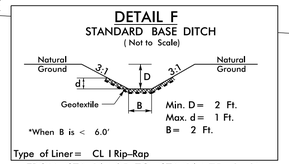

FROM STA. 16+35 TO STA. 16+75 -L- Lt

-L-		
PI Sta 14+85.46	PI Sta 16+76.22	PI Sta 18+51.22
△ = 9° 39' 08.3" (LT)	△ = 27° 57' 48.4" (LT)	△ = 6° 58' 04.1" (LT)
D = 6° 52' 41.7"	D = 11° 48' 48.8"	D = 5° 54' 24.4"
L = 140.33'	L = 236.71'	L = 117.96'
T = 70.33'	T = 120.76'	T = 59.05'
R = 833.00'	R = 485.00'	R = 970.00'
SE = 0.06	SE = 0.06	SE = 0.06
RO = 132.00'	RO = 132.00'	RO = 132.00'

SEE SHEET 5 FOR -L- PROFILE
SEE SHEET S-1 THRU S-21 FOR STRUCTURE PLANS

REVISIONS

8/17/99

invgld_exp(Session) B5709_Rdy.psh.dgn
USER: CHANDRA

5/28/99

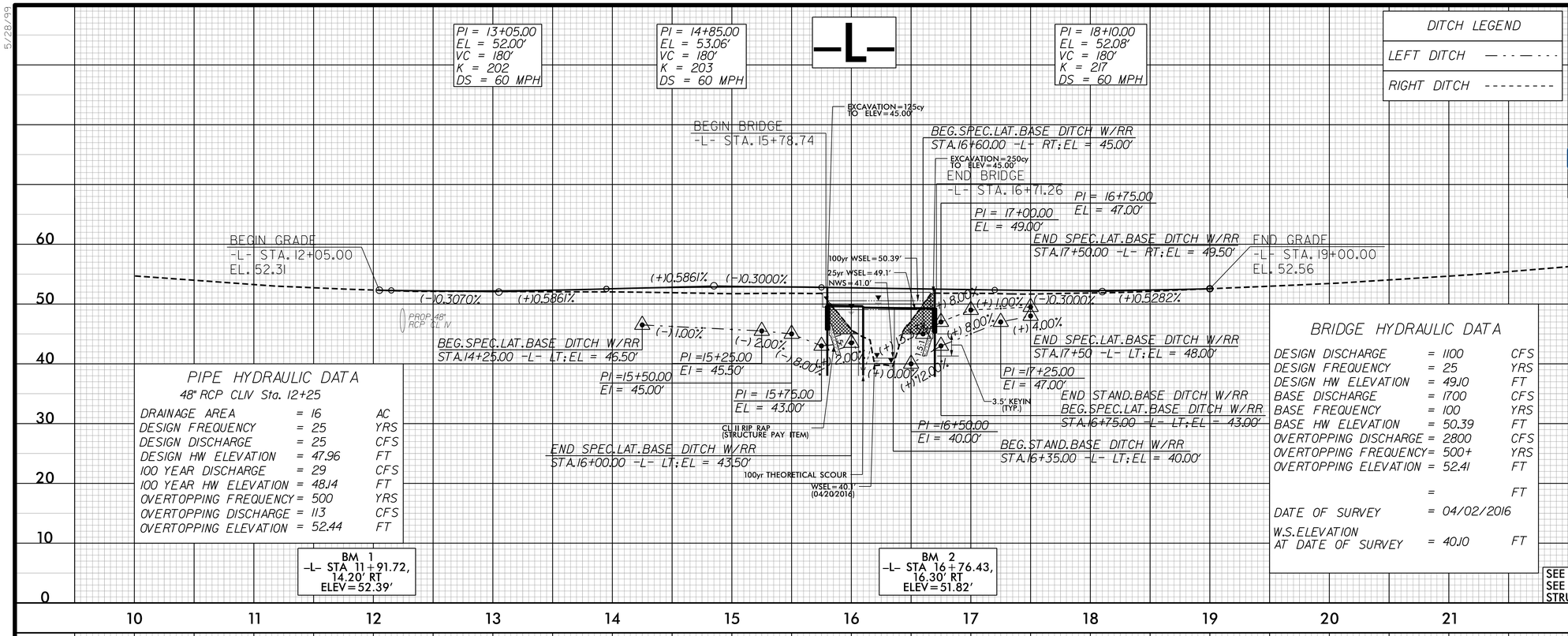

PIPE HYDRAULIC DATA

48" RCP CLIV Sta. 12+25

DRAINAGE AREA	= 16	AC
DESIGN FREQUENCY	= 25	YRS
DESIGN DISCHARGE	= 25	CFS
DESIGN HW ELEVATION	= 47.96	FT
100 YEAR DISCHARGE	= 29	CFS
100 YEAR HW ELEVATION	= 48.14	FT
OVERTOPPING FREQUENCY	= 500	YRS
OVERTOPPING DISCHARGE	= 113	CFS
OVERTOPPING ELEVATION	= 52.44	FT

BM 1
-L- STA 11+91.72,
14.20' RT
ELEV = 52.39'

BM 2
-L- STA 16+76.43,
16.30' RT
ELEV = 51.82'

BRIDGE HYDRAULIC DATA

DESIGN DISCHARGE	= 1100	CFS
DESIGN FREQUENCY	= 25	YRS
DESIGN HW ELEVATION	= 49.0	FT
BASE DISCHARGE	= 1700	CFS
BASE FREQUENCY	= 100	YRS
BASE HW ELEVATION	= 50.39	FT
OVERTOPPING DISCHARGE	= 2800	CFS
OVERTOPPING FREQUENCY	= 500+	YRS
OVERTOPPING ELEVATION	= 52.41	FT
	=	FT
DATE OF SURVEY	= 04/02/2016	
W.S. ELEVATION AT DATE OF SURVEY	= 40.0	FT

SEE SHEET 4 FOR -L- ALIGNMENT
SEE SHEET S-1 THRU S-21 FOR STRUCTURE PLANS

DITCH LEGEND	
LEFT DITCH	— · · — · · —
RIGHT DITCH	- - - - - - - - -

PROJECT REFERENCE NO.	SHEET NO.
B-5709	5

ROADWAY DESIGN ENGINEER

NORTH CAROLINA PROFESSIONAL SEAL 035683 ENGINEER DAVID J. CLODGO
5/5/2017
DocuSigned by: David Clodgo

HYDRAULICS ENGINEER

NORTH CAROLINA PROFESSIONAL SEAL 31025 ENGINEER KAREN HEFNER
5/5/2017
DocuSigned by: Karen Hefner

CDM Smith
CDM Smith Inc.
5400 Glenwood Avenue
Suite 400
Raleigh, NC 27612-3228
NC COA No. F-1255

MI Engineering, PLLC
1011 Schaub Drive
Suite 100
Raleigh, NC 27606
NC COA No.

DOCUMENT NOT CONSIDERED FINAL UNLESS ALL SIGNATURES COMPLETED

invalid expression
ISERA\DGN\Hydy_pf1_sht.dgn

STATE OF NORTH CAROLINA
DIVISION OF HIGHWAYS

TRANSPORTATION MANAGEMENT PLAN

BLADEN COUNTY

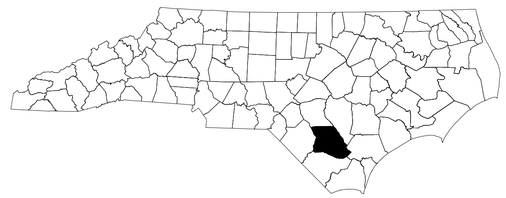

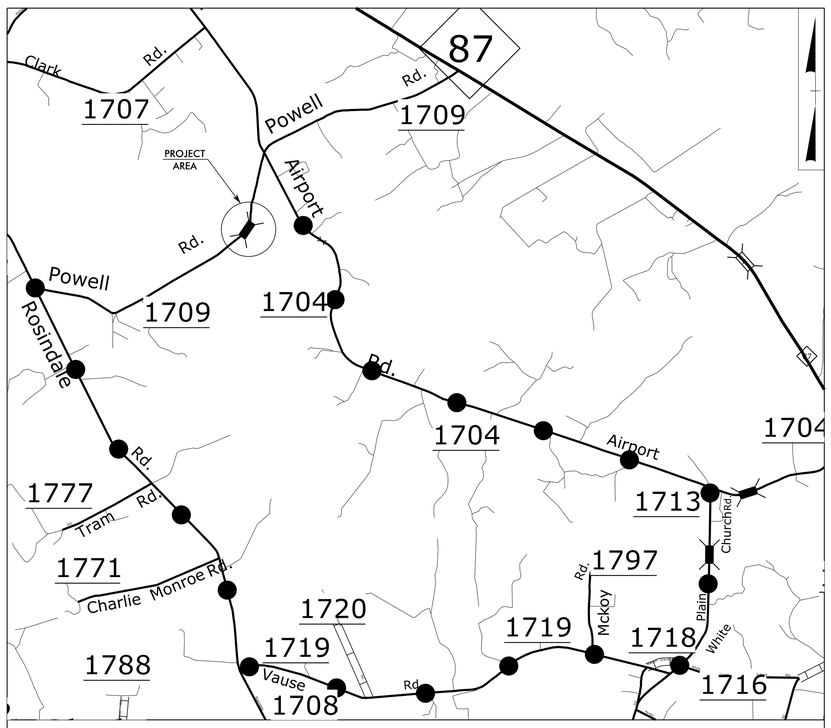

LOCATION: BRIDGE NO. 154 OVER HAMMOND CREEK ON SR 1709 (COLEY ROAD)

VICINITY MAP

OFF-SITE DETOUR ROUTE

INDEX OF SHEETS

SHEET NO.
TMP-1

TIP PROJECT: B-5709

WORK ZONE SAFETY & MOBILITY
"from the MOUNTAINS to the COAST"

N.C.D.O.T. WORK ZONE TRAFFIC CONTROL
1561 MAIL SERVICE CENTER (MSC) RALEIGH, NC 27699-1561
750 N. GREENFIELD PARKWAY, GARNER, NC 27529 (DELIVERY)
PHONE: (919) 773-2800 FAX: (919) 771-2745

J. S. BOURNE, P.E. — STATE TRAFFIC MANAGEMENT ENGINEER
J. S. KITE, P.E. — TRAFFIC CONTROL PROJECT ENGINEER
M. SPRINGER, P.E. — TRAFFIC CONTROL PROJECT DESIGN ENGINEER
TRAFFIC CONTROL DESIGN ENGINEER

DIVISION OF HIGHWAYS · STATE OF NORTH CAROLINA · DEPARTMENT OF TRANSPORTATION · WORK ZONE TRAFFIC CONTROL

DOCUMENT NOT CONSIDERED FINAL UNLESS ALL SIGNATURES COMPLETED

CDM Smith
CDM Smith Inc.
5400 Glenwood Avenue
Suite 400
Raleigh, NC 27612-3228
NC COA No. F-1255

APPROVED: DocuSigned by: Kit A. Persian
DATE: 5/4/2017
SEAL
NORTH CAROLINA PROFESSIONAL SEAL 021655 ENGINEER KIT A. PERSIAN

4/10/2017
R:\ncdot\B5709\Traffic\TrafficControl\TCP\B5709_TMP_TC01.dgn
User:persianik

PROJ. REFERENCE NO.	SHEET NO.
B-5709	TMP-1A

ROADWAY STANDARD DRAWINGS

THE FOLLOWING ROADWAY STANDARDS AS SHOWN IN "ROADWAY STANDARD DRAWINGS" - PROJECT SERVICES UNIT - N.C. DEPARTMENT OF TRANSPORTATION - RALEIGH, N.C., DATED JANUARY 2012 ARE APPLICABLE TO THIS PROJECT AND BY REFERENCE HEREBY ARE CONSIDERED A PART OF THESE PLANS:

STD. NO.	TITLE
1101.03	TEMPORARY ROAD CLOSURES
1101.11	TRAFFIC CONTROL DESIGN TABLES
1110.01	STATIONARY WORK ZONE SIGNS
1145.01	BARRICADES

LEGEND

GENERAL

- DIRECTION OF TRAFFIC FLOW
- DIRECTION OF PEDESTRIAN TRAFFIC FLOW
- EXIST. PVMT.
- NORTH ARROW
- PROPOSED PVMT.
- TEMP. SHORING (LOCATION PURPOSES ONLY)

SIGNALS

- EXISTING
- PROPOSED
- TEMPORARY

PAVEMENT MARKINGS

- EXISTING LINES
- TEMPORARY LINES

TRAFFIC CONTROL DEVICES

- BARRICADE (TYPE III)
- CONE
- DRUM
- SKINNY DRUM
- TUBULAR MARKER
- TEMPORARY CRASH CUSHION
- FLASHING ARROW BOARD
- FLAGGER
- LAW ENFORCEMENT
- TRUCK MOUNTED ATTENUATOR (TMA)
- CHANGEABLE MESSAGE SIGN

TEMPORARY SIGNING

- PORTABLE SIGN
- STATIONARY SIGN
- STATIONARY OR PORTABLE SIGN

PAVEMENT MARKERS

- CRYSTAL/CRYSTAL
- CRYSTAL/RED
- YELLOW/YELLOW

PAVEMENT MARKING SYMBOLS

- PAVEMENT MARKING SYMBOLS

APPROVED: DocuSigned by: Kit A. Persiani
69634AC5704C424...

DATE: 5/4/2017

SEAL

NORTH CAROLINA PROFESSIONAL SEAL 021655 ENGINEER KIT A. PERSIANI

DOCUMENT NOT CONSIDERED FINAL UNLESS ALL SIGNATURES COMPLETED

DIVISION OF HIGHWAYS · STATE OF NORTH CAROLINA · DEPARTMENT OF TRANSPORTATION · WORK ZONE TRAFFIC CONTROL

CDM Smith
CDM Smith Inc.
5400 Glenwood Avenue
Suite 400
Raleigh, NC 27612-3228
NC COA No. F-1255

ROADWAY STANDARD DRAWINGS & LEGEND

4/10/2017
R:\ncdot\B5709\Traffic\TrafficControl\TCP\B5709_TMP_TC01A.dgn
User:persiank

PROJ. REFERENCE NO.	SHEET NO.
B-5709	TMP-1B

MANAGEMENT STRATEGIES

1- CLOSE SR 1709 COLEY ROAD TO TRAFFIC AND DETOR TRAFFIC OFF-SITE.

2- LOCAL ACCESS TO ALL RESIDENCES AND BUSINESSES WILL BE MAINTAINED BETWEEN CLOSURE POINTS AT ALL TIMES DURING CONSTRUCTION.

GENERAL NOTES

CHANGES MAY BE REQUIRED WHEN PHYSICAL DIMENSIONS IN THE DETAIL DRAWINGS, STANDARD DETAILS, AND ROADWAY DETAILS ARE NOT ATTAINABLE TO MEET FIELD CONDITIONS OR RESULT IN DUPLICATE OR UNDESIRED OVERLAPPING OF DEVICES. MODIFICATION MAY INCLUDE: MOVING, SUPPLEMENTING, COVERING, OR REMOVAL OF DEVICES AS DIRECTED BY THE ENGINEER.

THE FOLLOWING GENERAL NOTES APPLY AT ALL TIMES FOR THE DURATION OF THE CONSTRUCTION PROJECT EXCEPT WHEN OTHERWISE NOTED IN THE PLAN OR DIRECTED BY THE ENGINEER.

TRAFFIC PATTERN ALTERATIONS

A) NOTIFY THE ENGINEER TWENTY ONE (21) CALENDAR DAYS PRIOR TO ANY TRAFFIC PATTERN ALTERATION.

SIGNING

B) INSTALL ADVANCE WORK ZONE WARNING SIGNS WHEN WORK IS WITHIN 40 FT FROM THE EDGE OF TRAVEL LANE AND NO MORE THAN THREE (3) DAYS PRIOR TO THE BEGINNING OF CONSTRUCTION.

C) PROVIDE SIGNING AND DEVICES REQUIRED TO CLOSE THE ROAD ACCORDING TO THE ROADWAY STANDARD DRAWINGS AND TRAFFIC CONTROL PLANS.

PROVIDE SIGNING REQUIRED FOR THE OFF-SITE DETOUR ROUTE AS SHOWN IN THE TRAFFIC CONTROL PLANS.

D) COVER OR REMOVE ALL SIGNS AND DEVICES REQUIRED TO CLOSE THE ROAD WHEN ROAD CLOSURE IS NOT IN OPERATION.

COVER OR REMOVE ALL SIGNS REQUIRED FOR THE OFF-SITE DETOUR WHEN THE DETOUR IS NOT IN OPERATION.

E) ENSURE ALL NECESSARY SIGNING IS IN PLACE PRIOR TO ALTERING ANY TRAFFIC PATTERN.

TRAFFIC CONTROL DEVICES

F) PLACE TYPE III BARRICADES, WITH "ROAD CLOSED" SIGN R11-2 ATTACHED, OF SUFFICIENT LENGTH TO CLOSE ENTIRE ROADWAY.

PHASING

STEP 1: USING RSD 1101.03 (SHEET 1 OF 9), INSTALL DETOUR ROUTE SIGNING TO CLOSE SR 1709 (COLEY ROAD) FROM STA. 12+05+/- TO STA. 19+00+/- -L-.

STEP 2: AWAY FROM TRAFFIC, COMPLETE CONSTRUCTION OF THE PROPOSED BRIDGE AND ROADWAY APPROACHES, INCLUDING DRAINAGE, GUARDRAIL, FINAL PAVEMENT MARKINGS AND MARKERS ON PROPOSED -L- FROM STA. 12+05+/- TO STA. 19+00+/-.

STEP 3: REMOVE TEMPORARY TRAFFIC CONTROL DEVICES AND OPEN -L-TO THE PROPOSED 2-LANE, 2-WAY TRAFFIC PATTERN.

LOCAL NOTES

1- NOTIFY BLADEN COUNTY EMERGENCY SERVICES AND PUBLIC SCHOOLS AT LEAST ONE MONTH PRIOR TO ROAD CLOSURE.

CDM Smith
CDM Smith Inc.
5400 Glenwood Avenue
Suite 400
Raleigh, NC 27612-3228
NC COA No. F-1255

APPROVED: DocuSigned by: Kit A. Persiani 69634AC5704C424...

DATE: 5/4/2017

SEAL

NORTH CAROLINA PROFESSIONAL SEAL 021655 ENGINEER KIT A. PERSIANI

DOCUMENT NOT CONSIDERED FINAL UNLESS ALL SIGNATURES COMPLETED

DIVISION OF HIGHWAYS · STATE OF NORTH CAROLINA · DEPARTMENT OF TRANSPORTATION · WORK ZONE TRAFFIC CONTROL

TRANSPORTATION OPERATIONS PLAN

PROJ. REFERENCE NO.	SHEET NO.
B-5709	TMP-2

PROJECT B–5709

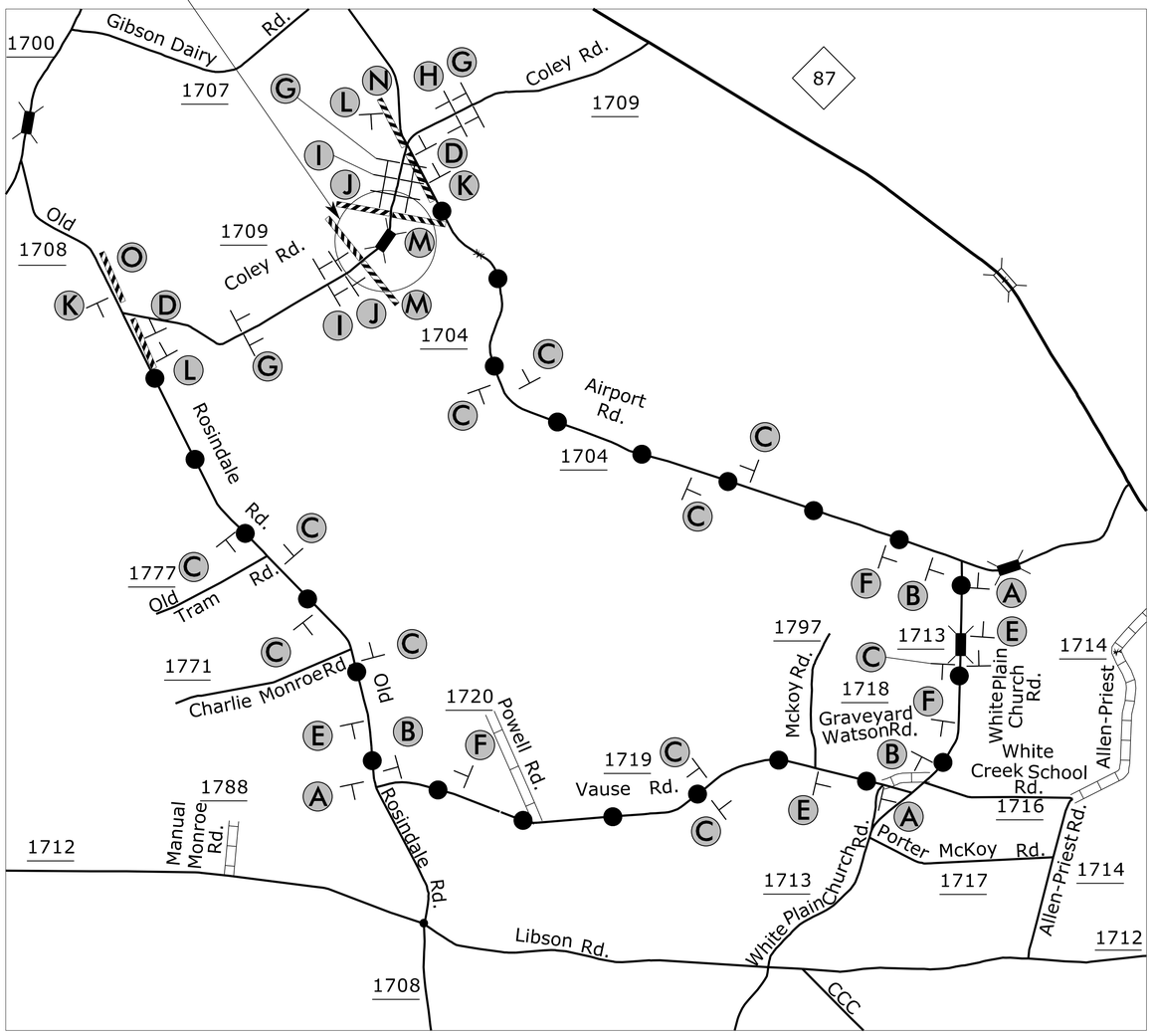

OFF-SITE DETOUR ROUTE

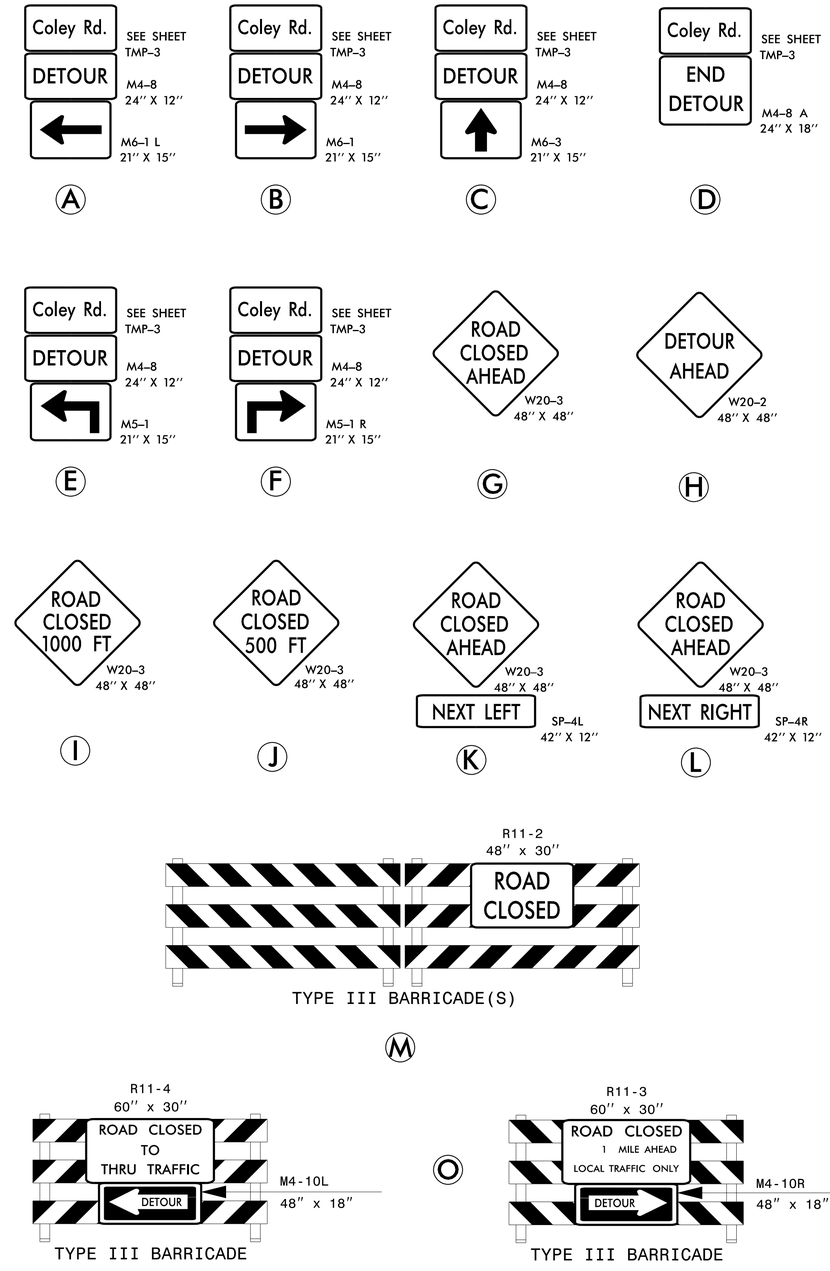

CDM Smith
CDM Smith Inc.
5400 Glenwood Avenue
Suite 400
Raleigh, NC 27612-3228
NC COA No. F-1255

APPROVED: DocuSigned by: Kit A. Persiani 69634AC5704C424...

DATE: 5/4/2017

SEAL

NORTH CAROLINA PROFESSIONAL SEAL 021655 ENGINEER KIT A. PERSIANI

DIVISION OF HIGHWAYS STATE OF NORTH CAROLINA DEPARTMENT OF TRANSPORTATION WORK ZONE TRAFFIC CONTROL

DOCUMENT NOT CONSIDERED FINAL UNLESS ALL SIGNATURES COMPLETED

OFF-SITE DETOUR

4/10/2017
R:\nccdot\B5709\Traffic\TrafficControl\TCP\B5709_TMP_TC02.dgn
User:persiankk

PROJ. REFERENCE NO.	SHEET NO.
B-5709	TMP-3

SIGN NUMBER: Street name
TYPE: STATIONARY
QUANTITY: SEE PLANS

SIGN WIDTH: 3′-0″
HEIGHT: 1′-0″
TOTAL AREA: 3.0 Sq.Ft.

BORDER TYPE: INSET
RECESS: 0.38″
WIDTH: 0.5″
RADII: 1.5″

NO. Z BARS:
LENGTH:

BACKG COLOR: Fluorescent Orange
COPY COLOR: Black

SYMBOL	X	Y	WID	HT

MAT′L: 0.080″ (2.0 mm) ALUMINUM

DESIGN BY: BN
PROJECT ID: B-5709
CHECKED BY: KAP
LOCATION: Elizabethtown
Feb 17, 2017
DIV: 6

USE NOTES: 1,2

1. Legend and border shall be direct applied black non-reflective sheeting.
2. Background shall be NC GRADE B fluorescent orange retroreflective sheeting.

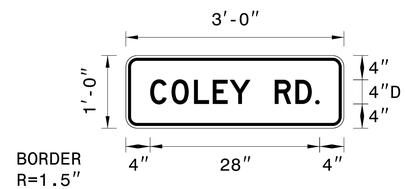

BORDER
R=1.5″
TH=0.5″
IN=0.38″

Panel Style: Traffic Control.ssi
M.U.T.C.D.: 2009 Edition

Spacing Factor is 1 unless specified otherwise

LETTER POSITIONS

Letter locations are string start to lower left corner

																											Series/Size Text Length
		C	O	L	E	Y		R	D	.																	D 2000
	4	0	3.5	7.2	10.3	13.1	16.6	20.6	24	27.2																	28

FILENAME: B5709_TMP_TC03

NORTH CAROLINA D.O.T. SIGN DETAIL

APPROVED: DocuSigned by: Kit A. Persiani
E9634AC5704C424...
DATE: 5/4/2017
SEAL

NORTH CAROLINA PROFESSIONAL SEAL 021655 ENGINEER KIT A. PERSIANI

DOCUMENT NOT CONSIDERED FINAL UNLESS ALL SIGNATURES COMPLETED

CDM Smith
CDM Smith Inc.
5400 Glenwood Avenue
Suite 400
Raleigh, NC 27612-3228
NC COA No. F-1255

DIVISION OF HIGHWAYS
STATE OF NORTH CAROLINA
DEPARTMENT OF TRANSPORTATION
WORK ZONE TRAFFIC CONTROL

SIGN DESIGN

4/10/2017
R:\ncdot\B5709\Traffic\TrafficControl\TCP\B5709_TMP_TC03.dgn
User:persianik

T.I.P.: B-5709

STATE OF NORTH CAROLINA
DEPARTMENT OF TRANSPORTATION

PAVEMENT MARKING PLAN
BLADEN COUNTY
LOCATION: COLEY ROAD AT HAMMONDS CREEK

TIP NO.	SHEET NO.
B-5709	PMP-1

APPROVED: DocuSigned by: Kit A. Persiani 69634AC5704C424...

DATE: 5/4/2017

SEAL

NORTH CAROLINA PROFESSIONAL SEAL 021655 ENGINEER KIT A. PERSIANI

DOCUMENT NOT CONSIDERED FINAL UNLESS ALL SIGNATURES COMPLETED

CDM Smith
CDM Smith Inc.
5400 Glenwood Avenue
Suite 400
Raleigh, NC 27612-3228
NC COA No. F-1255

ROADWAY STANDARD DRAWING

THE FOLLOWING ROADWAY STANDARDS AS APPEAR IN "ROADWAY STANDARD DRAWINGS" - PROJECT SERVICES UNIT - N.C. DEPARTMENT OF TRANSPORTATION - RALEIGH, N.C., DATED JANUARY 2012 ARE APPLICABLE TO THIS PROJECT AND BY REFERENCE HEREBY ARE CONSIDERED A PART OF THESE PLANS:

STD. NO.	TITLE
1205.01	PAVEMENT MARKINGS - LINE TYPES AND OFFSETS
1205.02	PAVEMENT MARKINGS - TWO-LANE AND MULTILANE ROADWAYS
1205.12	PAVEMENT MARKINGS - BRIDGES
1250.01	RAISED PAVEMENT MARKERS - INSTALLATION SPACING
1251.01	RAISED PAVEMENT MARKERS - PERMANENT AND TEMPORARY
1261.01	GUARDRAIL AND BARRIER DELINEATORS - INSTALLATION SPACING
1261.02	GUARDRAIL AND BARRIER DELINEATORS - TYPES AND MOUNTING
1262.01	GUARDRAIL END DELINEATION

GENERAL NOTES

THE FOLLOWING GENERAL NOTES APPLY AT ALL TIMES FOR THE DURATION OF THE CONSTRUCTION PROJECT, EXCEPT WHEN OTHERWISE NOTED IN THE PLAN, OR DIRECTED BY THE ENGINEER.

A) INSTALL PAVEMENT MARKINGS AND PAVEMENT MARKERS ON THE FINAL SURFACE AS FOLLOWS:

ROAD NAME	MARKING	MARKER
COLEY ROAD	PAINT	PERMANENT RAISED

B) PLACE TWO APPLICATIONS OF PAINT PAVEMENT MARKINGS ON THE FINAL WEARING SURFACE. PLACE THE SECOND APPLICATION OF PAINT UPON SUFFICIENT DRYING TIME OF THE FIRST.

C) TIE PROPOSED PAVEMENT MARKING LINES TO EXISTING PAVEMENT MARKING LINES.

D) REMOVE/REPLACE ANY CONFLICTING/DAMAGED PAVEMENT MARKINGS AND MARKERS.

E) MARKERS SHALL BE INSTALLED ACCORDING TO THE NCDOT ROADWAY STANDARD DRAWING 1250.01.

INDEX

PAVEMENT MARKING SCHEDULE

SYMBOL	DESCRIPTION
PAINT(4")	
PA	WHITE EDGELINE
PI	YELLOW DOUBLE CENTER
PERMANENT RAISED PAVEMENT MARKERS	
MA	YELLOW & YELLOW

PLAN PREPARED BY: N.C.D.O.T. SIGNING AND DELINEATION UNIT

_____ SIGNING & DELINEATION REGIONAL ENGINEER

_____ SIGNING & DELINEATION PROJECT DESIGN ENGINEER/TECHNICIAN

STATE OF NORTH CAROLINA DEPARTMENT OF TRANSPORTATION

5/3/2017
R:\Coon\B5709\Traffic\Signing\CADD\B5709_TMP_PM01.dgn
jsenior@cdm.com

TIP NO.	SHEET NO.
B-5709	PMP-2

APPROVED: DocuSigned by: Kit A. Persiani 69634AC5704C424...

DATE: 5/4/2017

SEAL

NORTH CAROLINA PROFESSIONAL SEAL 021655 ENGINEER KIT A. PERSIANI

DOCUMENT NOT CONSIDERED FINAL UNLESS ALL SIGNATURES COMPLETED

CDM Smith
CDM Smith Inc.
5400 Glenwood Avenue
Suite 400
Raleigh, NC 27612-3228
NC COA No. F-1255

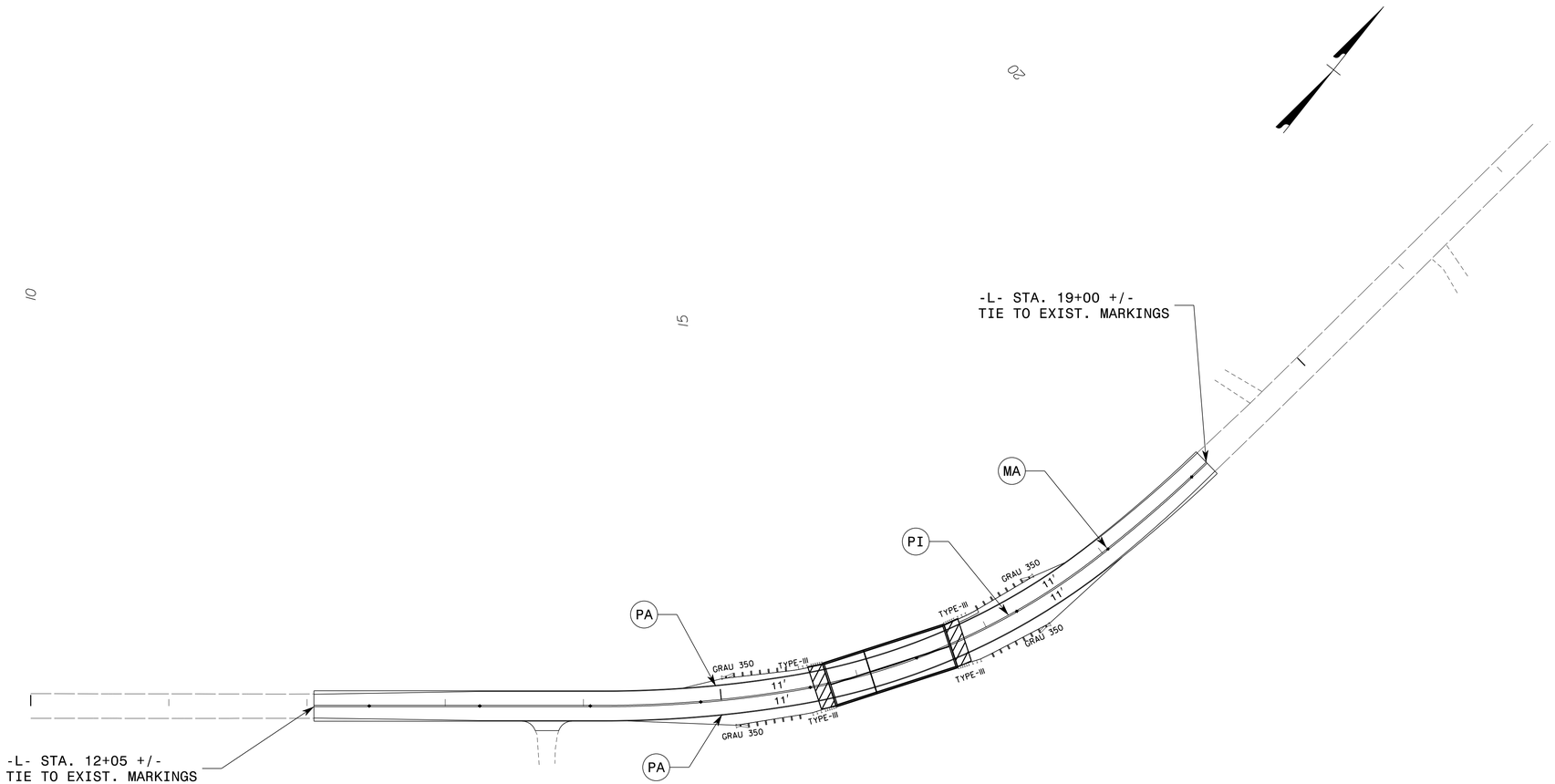

PAVEMENT MARKING DETAIL

5/3/2017
R:\2001\B5709\Traffic\Signing\CADD\B5709_TMP_PM02.dgn
jsanderson

TIP PROJECT: B-5709

See Sheet 1-A For Index of Sheets

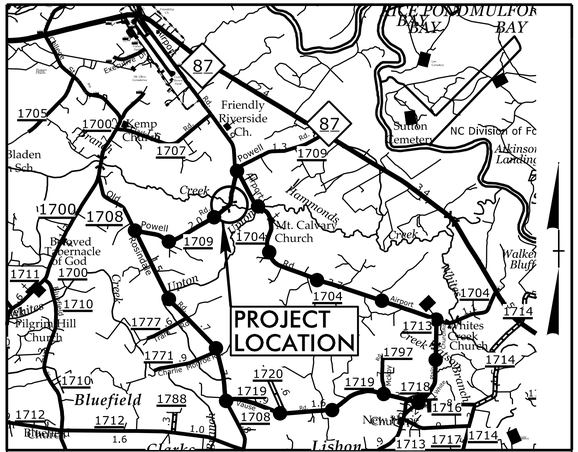

VICINITY MAP N.T.S.

DENOTES OFF-SITE DETOUR

STATE OF NORTH CAROLINA
DIVISION OF HIGHWAYS

PLAN FOR PROPOSED
HIGHWAY EROSION CONTROL

BLADEN COUNTY

LOCATION: BRIDGE NO. 154 OVER HAMMOND CREEK ON SR 1709 (COLEY ROAD)

TYPE OF WORK: GRADING, DRAINAGE, PAVING, AND STRUCTURE

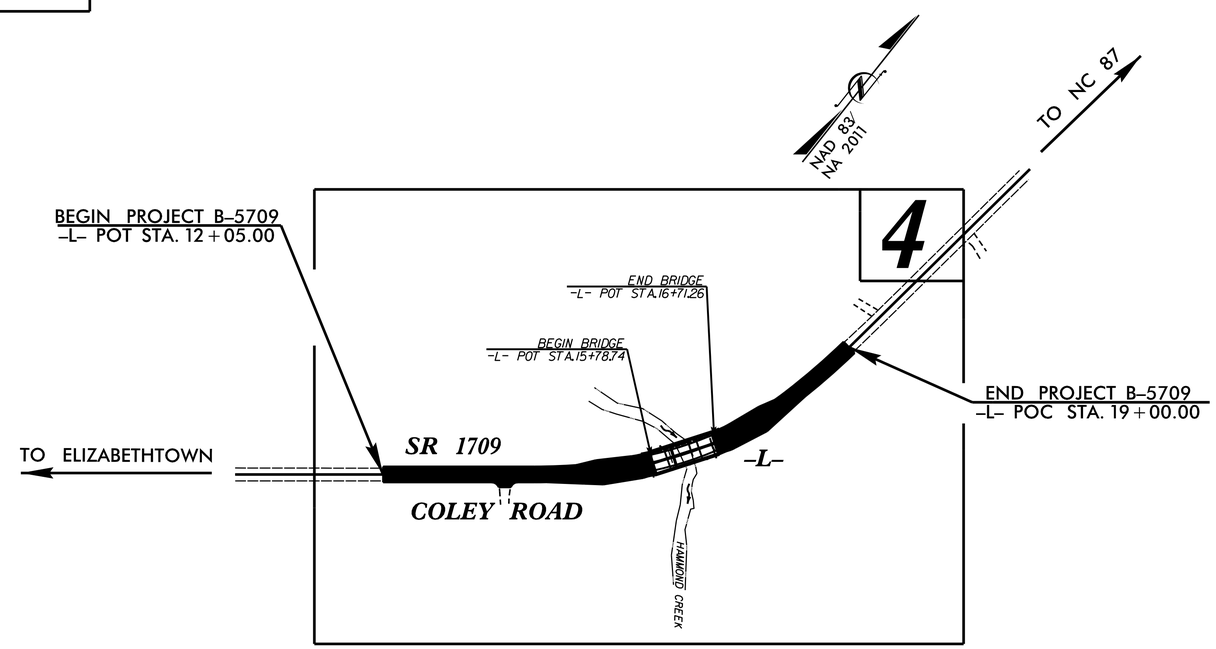

STATE	STATE PROJECT REFERENCE NO.	SHEET NO.	TOTAL SHEETS
N.C.	B-5709	EC-1	

STATE PROJ. NO.	F. A. PROJ. NO.	DESCRIPTION

EROSION AND SEDIMENT CONTROL MEASURES

Std. #	Description	Symbol
1630.03	Temporary Silt Ditch	TSD
1630.05	Temporary Diversion	TD
1605.01	Temporary Silt Fence	
1606.01	Special Sediment Control Fence	
1622.01	Temporary Berms and Slope Drains	
1630.02	Silt Basin Type B	
1633.01	Temporary Rock Silt Check Type-A	
	Temporary Rock Silt Check Type-A with Matting and Polyacrylamide (PAM)	
1633.02	Temporary Rock Silt Check Type-B	
	Wattle/ Coir Fiber Wattle	EW CFW
	Wattle/ Coir Fiber Wattle with Polyacrylamide (PAM)	
1634.01	Temporary Rock Sediment Dam Type-A	
1634.02	Temporary Rock Sediment Dam Type-B	
1635.01	Rock Pipe Inlet Sediment Trap Type-A	
1635.02	Rock Pipe Inlet Sediment Trap Type-B	
1630.04	Stilling Basin	
1630.06	Special Stilling Basin	
	Rock Inlet Sediment Trap:	
1632.01	Type A	A
1632.02	Type B	B
1632.03	Type C	C
	Skimmer Basin	
	Tiered Skimmer Basin	
	Infiltration Basin	

THIS PROJECT CONTAINS EROSION CONTROL PLANS FOR CLEARING AND GRUBBING PHASE OF CONSTRUCTION.

GRAPHIC SCALE

0
PLANS

0
PROFILE (HORIZONTAL)

0
PROFILE (VERTICAL)

THESE EROSION AND SEDIMENT CONTROL PLANS COMPLY WITH THE REGULATIONS SET FORTH BY THE NCG-010000 GENERAL CONSTRUCTION PERMIT EFFECTIVE AUGUST 1ST, 2016 AND ISSUED BY THE NORTH CAROLINA DEPARTMENT OF ENVIRONMENT AND NATURAL RESOURCES DIVISION OF WATER RESOURCES.

Prepared In the Office of:

MI-ENGINEERING
1011 SCHAUB DRIVE, SUITE 100
RALEIGH, NC 27606

Designed by:

MELANIE NGUYEN, PE ***3223***
NAME *LEVEL III CERTIFICATION NO.*

Reviewed In the Office of:

ROADSIDE ENVIRONMENTAL UNIT
1 South Wilmington St.
Raleigh, NC 27611

2012 STANDARD SPECIFICATIONS

Reviewed by:

MARK STALEY, CPESC, CPSWQ

Roadway Standard Drawings

The following roadway english standards as appear in "Roadway Standard Drawings"– Roadway Design Unit – N. C. Department of Transportation – Raleigh, N. C., dated January 2012 and the latest revison thereto are applicable to this project and by reference hereby are considered a part of these plans.

1604.01	Railroad Erosion Control Detail	1632.01	Rock Inlet Sediment Trap Type A
1605.01	Temporary Silt Fence	1632.02	Rock Inlet Sediment Trap Type B
1606.01	Special Sediment Control Fence	1632.03	Rock Inlet Sediment Trap Type C
1607.01	Gravel Construction Entrance	1633.01	Temporary Rock Silt Check Type A
1622.01	Temporary Berms and Slope Drains	1633.02	Temporary Rock Silt Check Type B
1630.01	Riser Basin	1634.01	Temporary Rock Sediment Dam Type A
1630.02	Silt Basin Type B	1634.02	Temporary Rock Sediment Dam Type B
1630.03	Temporary Silt Ditch	1635.01	Rock Pipe Inlet Sediment Trap Type A
1630.04	Stilling Basin	1635.02	Rock Pipe Inlet Sediment Trap Type B
1630.05	Temporary Diversion	1640.01	Coir Fiber Baffle
1630.06	Special Stilling Basin	1645.01	Temporary Stream Crossing
1631.01	Matting Installation		

PROJECT REFERENCE NO.	SHEET NO.
B-5709	EC-2
R/W SHEET NO.	
ROADWAY DESIGN ENGINEER	HYDRAULICS ENGINEER

TEMPORARY ROCK SILT CHECK TYPE 'A' WITH EXCELSIOR MATTING AND POLYACRYLAMIDE (PAM)

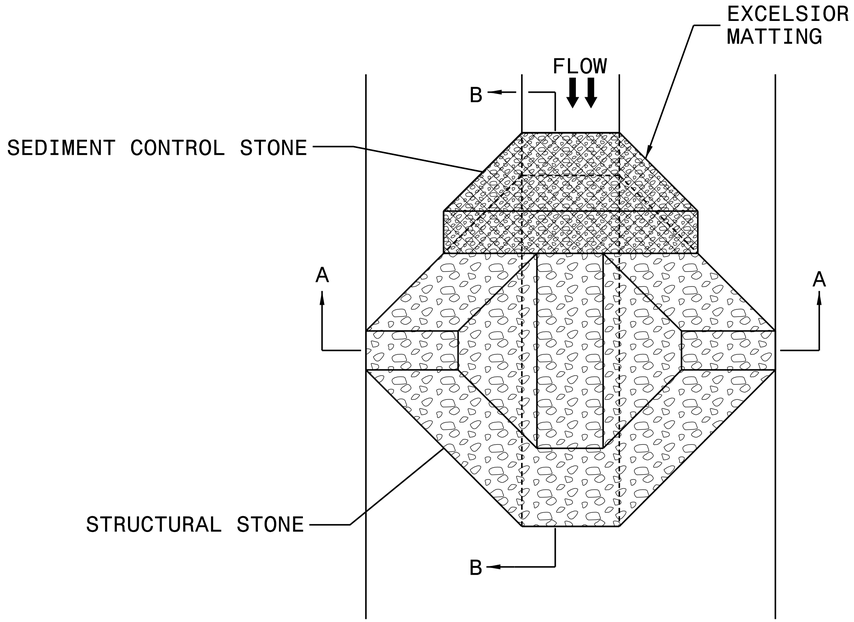

PLAN

NOTES:

INSTALL TEMPORARY ROCK SILT CHECK TYPE A IN ACCORDANCE WITH ROADWAY STANDARD DRAWING NO. 1633.01.

USE EXCELSIOR FOR MATTING MATERIAL AND ANCHOR MATTING SECTION AT TOP AND BOTTOM WITH CLASS B STONE.

PRIOR TO POLYACRYLAMIDE (PAM) APPLICATION, OBTAIN A SOIL SAMPLE FROM PROJECT LOCATION, AND FROM OFFSITE MATERIAL, AND ANALYZE FOR APPROPRIATE PAM FLOCCULANT TO BE APPLIED TO EACH ROCK SILT CHECK.

INITIALLY APPLY 4 OUNCES OF POLYACRYLAMIDE (PAM) TO TOP OF MATTING SECTION AND AFTER EVERY RAINFALL EVENT THAT EQUALS OR EXCEEDS 0.50 INCHES.

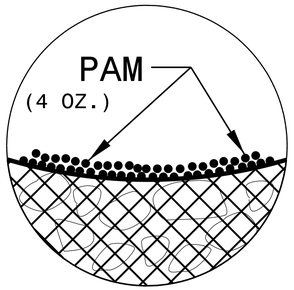

INSET A

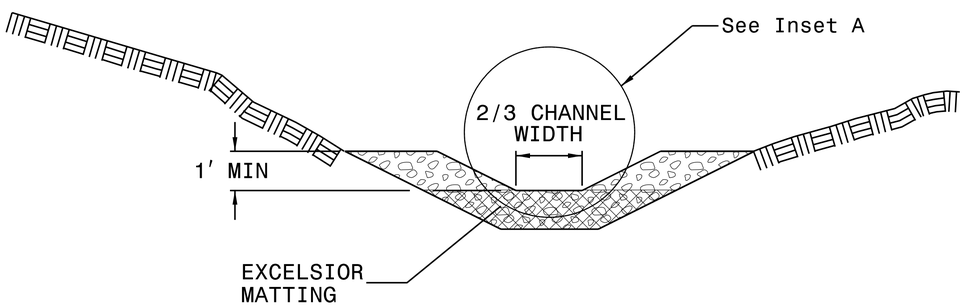

SECTION A-A

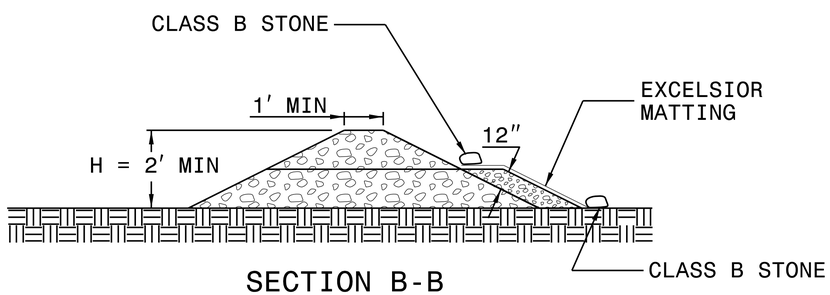

SECTION B-B

NOT TO SCALE

PROJECT REFERENCE NO.	SHEET NO.
B-5709	EC-3
ROADWAY DESIGN ENGINEER	HYDRAULICS ENGINEER

DIVISION OF HIGHWAYS
STATE OF NORTH CAROLINA

SOIL STABILIZATION TIMEFRAMES

SITE DESCRIPTION	STABILIZATION TIME	TIMEFRAME EXCEPTIONS
PERIMETER DIKES, SWALES, DITCHES AND SLOPES	7 DAYS	NONE
HIGH QUALITY WATER (HQW) ZONES	7 DAYS	NONE
SLOPES STEEPER THAN 3:1	7 DAYS	IF SLOPES ARE 10' OR LESS IN LENGTH AND ARE NOT STEEPER THAN 2:1, 14 DAYS ARE ALLOWED.
SLOPES 3:1 OR FLATTER	14 DAYS	7 DAYS FOR SLOPES GREATER THAN 50' IN LENGTH.
ALL OTHER AREAS WITH SLOPES FLATTER THAN 4:1	14 DAYS	NONE, EXCEPT FOR PERIMETERS AND HQW ZONES.

8/17/99

CLEARING & GRUBBING PLAN

CLEARING AND GRUBBING
EROSION CONTROL FOR
CONSTRUCTION SHEET 4

UTILIZE SPECIAL STILLING BASIN(S)
WHERE APPLICALBE

PROJECT REFERENCE NO.	SHEET NO.
B-5709	EC-04/CONST.04
R/W SHEET NO.	
ROADWAY DESIGN ENGINEER	HYDRAULICS ENGINEER

NOTE:
PLACE TEMPORARY ROCK SEDIMENT DAMS TYPE – B AND TEMPORARY ROCK SILT CHECKS TYPE – A AT DRAINAGE OUTLETS.

NOTE:
PERIMETER EROSION CONTROL MEASURES SHALL BE INSTALLED DURING CLEARING AND GRUBBING PHASE.

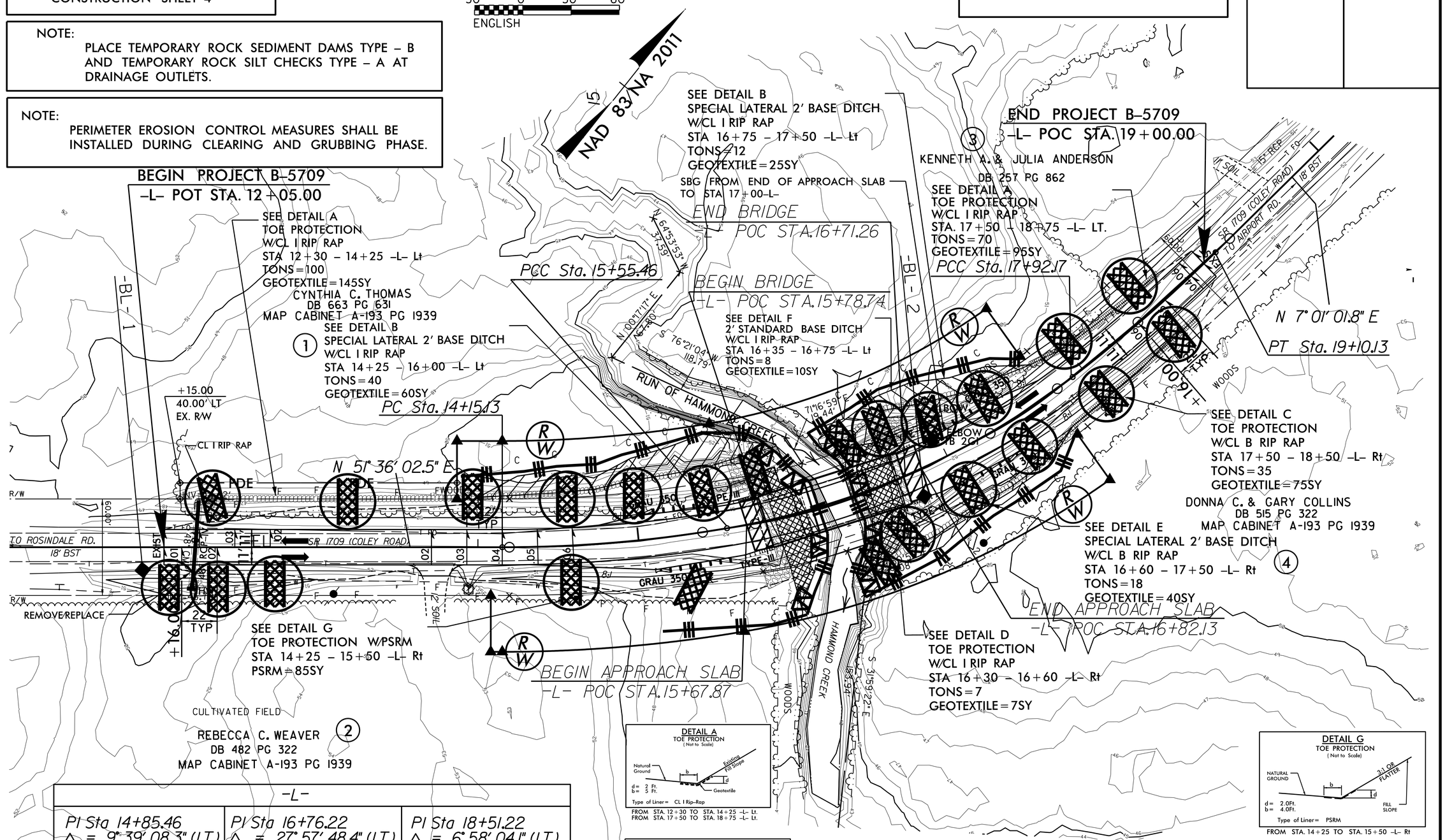

SEE DETAIL G
TOE PROTECTION W/PSRM
STA 14+25 – 15+50 -L- Rt
PSRM=85SY

-L-		
PI Sta 14+85.46	PI Sta 16+76.22	PI Sta 18+51.22
Δ = 9° 39' 08.3" (LT)	Δ = 27° 57' 48.4" (LT)	Δ = 6° 58' 04.1" (LT)
D = 6° 52' 41.7"	D = 11° 48' 48.8"	D = 5° 54' 24.4"
L = 140.33'	L = 236.71'	L = 117.96'
T = 70.33'	T = 120.76'	T = 59.05'
R = 833.00'	R = 485.00'	R = 970.00'
SE = 0.06	SE = 0.06	SE = 0.06
RO = 132.00'	RO = 132.00'	RO = 132.00'

FINAL GRADE PLAN

30' 0' 30' 60'
ENGLISH

NAD 83/NA 2011

PROJECT REFERENCE NO.	SHEET NO.
B-5709	EC-05/CONST.04
R/W SHEET NO.	
ROADWAY DESIGN ENGINEER	HYDRAULICS ENGINEER

UTILIZE SPECIAL STILLING BASIN(S) WHERE APPLICALBE

BEGIN PROJECT B-5709
-L- POT STA. 12+05.00

SEE DETAIL A
TOE PROTECTION
W/CL I RIP RAP
STA 12+30 - 14+25 -L- Lt
TONS=100
GEOTEXTILE=145SY

CYNTHIA C. THOMAS
DB 663 PG 631
MAP CABINET A-193 PG 1939

1
SEE DETAIL B
SPECIAL LATERAL 2' BASE DITCH
W/CL I RIP RAP
STA 14+25 - 16+00 -L- Lt
TONS=40
GEOTEXTILE=60SY

PC Sta. 14+15.13

SEE DETAIL B
SPECIAL LATERAL 2' BASE DITCH
W/CL I RIP RAP
STA 16+75 - 17+50 -L- Lt
TONS=12
GEOTEXTILE=25SY

SBG FROM END OF APPROACH SLAB TO STA 17+00-L-

END BRIDGE
-L- POC STA.16+71.26

PCC Sta. 15+55.46

BEGIN BRIDGE
-L- POC STA.15+78.74

SEE DETAIL F
2' STANDARD BASE DITCH
W/CL I RIP RAP
STA 16+35 - 16+75 -L- Lt
TONS=8
GEOTEXTILE=10SY

END PROJECT B-5709
-L- POC STA. 19+00.00

3
KENNETH A. & JULIA ANDERSON
DB 257 PG 862

SEE DETAIL A
TOE PROTECTION
W/CL I RIP RAP
STA. 17+50 - 18+75 -L- LT.
TONS=70
GEOTEXTILE=95SY

PCC Sta. 17+92.17

N 7° 01' 01.8" E
PT Sta. 19+10.13

SEE DETAIL C
TOE PROTECTION
W/CL B RIP RAP
STA 17+50 - 18+50 -L- Rt
TONS=35
GEOTEXTILE=75SY

DONNA C. & GARY COLLINS
DB 515 PG 322
MAP CABINET A-193 PG 1939

4
SEE DETAIL E
SPECIAL LATERAL 2' BASE DITCH
W/CL B RIP RAP
STA 16+60 - 17+50 -L- Rt
TONS=18
GEOTEXTILE=40SY

END APPROACH SLAB
-L- POC STA.16+82.13

SEE DETAIL D
TOE PROTECTION
W/CL I RIP RAP
STA 16+30 - 16+60 -L- Rt
TONS=7
GEOTEXTILE=7SY

N 51° 36' 02.5" E

BEGIN APPROACH SLAB
-L- POC STA.15+67.87

SEE DETAIL G
TOE PROTECTION W/PSRM
STA 14+25 - 15+50 -L- Rt
PSRM=85SY

-BL- 1
-BL- 2
+15.00
40.00' LT
EX. R/W
CL I RIP RAP
REMOVE/REPLACE
TO ROSINDALE RD.
18' BST
SR 1709 (COLEY ROAD)
TO AIRPORT RD.
15" RCP
12" SOIL
RUN OF HAMMOND CREEK
HAMMOND CREEK
WOODS
CULTIVATED FIELD
S 31°59'22" E
153.94'
S 71°16'59" E
19.44'
N 00°17'17" E
67.80'
S 76°21'04" W
118.79'
N 64°53'55" W
37.59'

REBECCA C. WEAVER
DB 482 PG 322
MAP CABINET A-193 PG 1939

2

-L-		
PI Sta 14+85.46	PI Sta 16+76.22	PI Sta 18+51.22
△ = 9° 39' 08.3" (LT)	△ = 27° 57' 48.4" (LT)	△ = 6° 58' 04.1" (LT)
D = 6° 52' 41.7"	D = 11° 48' 48.8"	D = 5° 54' 24.4"
L = 140.33'	L = 236.71'	L = 117.96'
T = 70.33'	T = 120.76'	T = 59.05'
R = 833.00'	R = 485.00'	R = 970.00'
SE = 0.06	SE = 0.06	SE = 0.06
RO = 132.00'	RO = 132.00'	RO = 132.00'

DETAIL A
TOE PROTECTION
(Not to Scale)
Natural Ground, Existing Fill Slope, b, d, Geotextile
d= 2 Ft.
b= 5 Ft.
Type of Liner= CL I Rip-Rap
FROM STA. 12+30 TO STA. 14+25 -L- Lt.
FROM STA. 17+50 TO STA. 18+75 -L- Lt.

DETAIL B
SPECIAL LATERAL BASE DITCH
(Not to Scale)
Natural Ground, 2:1, D, d, B, 3:1 or Flatter, Fill Slope, Geotextile
Min. D=2.0 Ft.
Max. d=1.0 Ft.
B=2.0 Ft.
Type of Liner= CL I Rip-Rap
FROM STA.14+25 TO STA.16+00 -L- Lt
FROM STA.16+75 TO STA.17+50 -L- Lt

DETAIL C
TOE PROTECTION
(Not to Scale)
Natural Ground, b, 3:1 or Flatter, Fill Slope, d, Geotextile
d= 2 Ft.
b= 5 Ft.
Type of Liner= CL B Rip-Rap
FROM STA. 17+50 TO STA. 18+50 -L- Rt

DETAIL D
TOE PROTECTION
(Not to Scale)
NATURAL GROUND, d, NATURAL GROUND, FILL SLOPE, GEOTEXTILE
d=2 Ft.
Type of Liner= CL I Rip-Rap
FROM STA. 16+30 TO STA. 16+60 -L- Rt

DETAIL E
SPECIAL LATERAL BASE DITCH
(Not to Scale)
Natural Ground, 2:1, D, d, B, 3:1 or Flatter, Fill Slope, Geotextile
Min. D=2.0 Ft.
Max. d=1.0 Ft.
B=2.0 Ft.
Type of Liner= CL B Rip-Rap
FROM STA.16+60 TO STA.17+50 -L- Rt

DETAIL F
STANDARD BASE DITCH
(Not to Scale)
Natural Ground, 2:1, D, 2:1, Natural Ground, d, B, Geotextile
Min. D= 2 Ft.
Max. d= 1 Ft.
B= 2 Ft.
*When B is < 6.0'
Type of Liner= CL I Rip-Rap
FROM STA. 16+35 TO STA. 16+75 -L- Lt

DETAIL G
TOE PROTECTION
(Not to Scale)
NATURAL GROUND, b, 2:1 OR FLATTER, d, FILL SLOPE
d= 2.0Ft.
b= 4.0Ft.
Type of Liner= PSRM
FROM STA. 14+25 TO STA. 15+50 -L- Rt

8/17/99

09/08/99

TIP PROJECT: B-5709

CONTRACT:

See Sheet 1-A For Index of Sheets

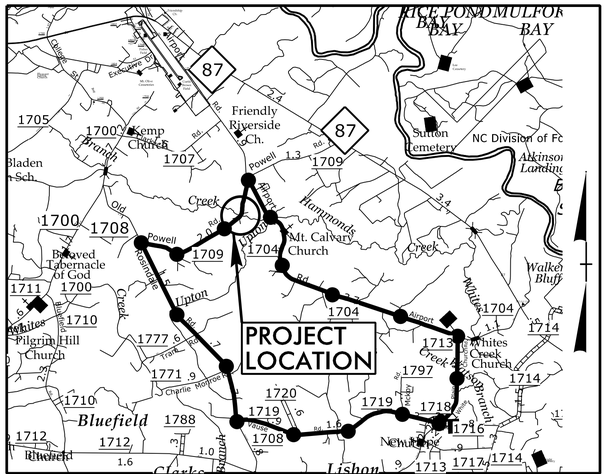

VICINITY MAP N.T.S.

DENOTES OFF-SITE DETOUR

STATE OF NORTH CAROLINA
DIVISION OF HIGHWAYS

T.I.P. NO.	SHEET NO.
B-5709	UO-1

NOTE:
ALL UTILITY WORK SHOWN ON THIS SHEET IS DONE BY OTHERS.
NO PAYMENT WILL BE MADE TO THE CONTRACTOR FOR UTILITY WORK SHOWN ON THIS SHEET.

UTILITIES BY OTHERS PLANS
BLADEN COUNTY

LOCATION: BRIDGE NO. 154 OVER HAMMOND CREEK ON SR 1709 (COLEY ROAD)

TYPE OF WORK: DISTRIBUTION POWER AND TELECOMMUNICATIONS

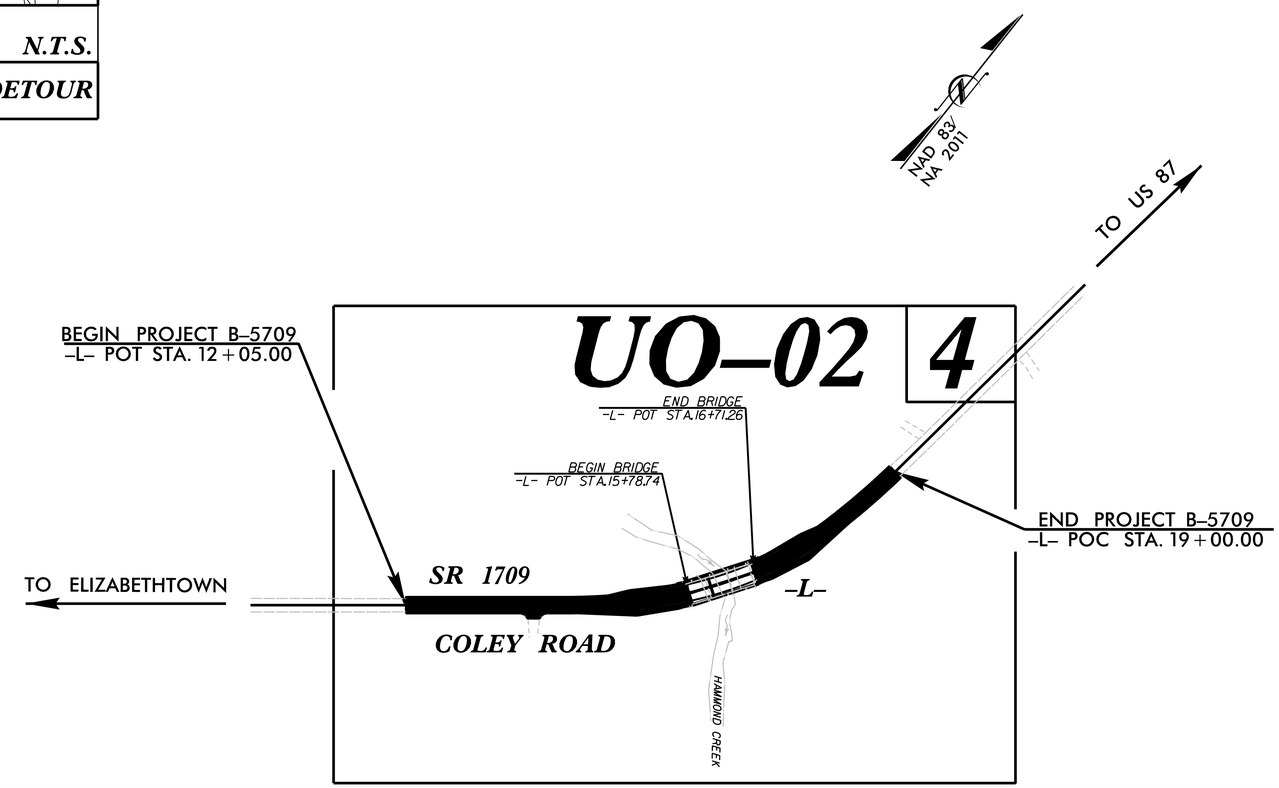

GRAPHIC SCALES

30 15 0 30 60
PLANS

50 25 0 50 100
PROFILE (HORIZONTAL)

10 5 0 10 20
PROFILE (VERTICAL)

INDEX OF SHEETS

SHEET NO.:	DESCRIPTION:
UO-1	TITLE SHEET
UO-02	UBO PLAN SHEET

UTILITY OWNERS WITH CONFLICTS

(A) FOUR COUNTY EMC - POWER DISTRIBUTION
(B) STAR TELEPHONE - TELECOMMUNICATIONS

PREPARED IN THE OFFICE OF:

SO-DEEP | SAM NC™
SO-DEEP | SAM NC, Inc.
A SAM COMPANY
2800-154 Sumner Boulevard, Raleigh, NC 27616 Tel 919-878-7466

Keith Garry — UTILITY PROJECT MANAGER
Freddie Bunn — UTILITY COORDINATOR

CDM Smith
CDM Smith Inc.
5400 Glenwood Avenue
Suite 400
Raleigh, NC 27612-3228
NC COA No. F-0412

FOR THE NORTH CAROLINA DEPT. OF TRANSPORTATION

2012 STANDARD SPECIFICATIONS

RIGHT OF WAY DATE:
SEPTEMBER 2016

LETTING DATE:
JANUARY 2017

DAVID J. CLODGO, P.E.
PROJECT ENGINEER

KIT PERSIANI, P.E.
PROJECT DESIGN ENGINEER

BRICE BELL, P.E.
PROJECT DESIGN ENGINEER

$$$$$$SYSTIME$$$$$
$$$$$$$$$$$$$$$$DGN$$$$$$$$$$$$$$$$$$
$$$$$$USERNAME$$$$

PROJECT REFERENCE NO.	SHEET NO.
B-5709	U0-02

UTILITIES BY OTHERS

NOTE:
ALL UTILITY WORK SHOWN ON THIS SHEET WILL BE DONE BY OTHERS. NO PAYMENT WILL BE MADE TO THE CONTRACTOR FOR UTILITY WORK SHOWN ON THIS SHEET.

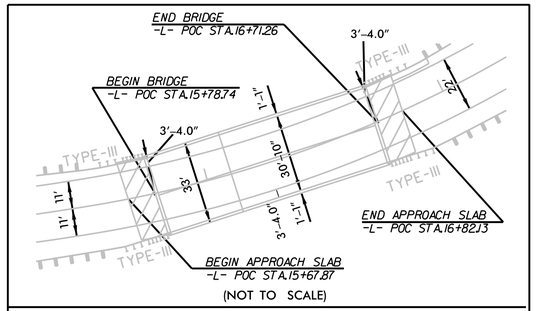

BRIDGE PAVEMENT RELATIONSHIP SHEET

RIGHT OF WAY AREA DATA

PARCEL NUMBER	PROPERTY OWNERS NAMES	TOTAL AREA	AREA TAKEN	AREA REMAINING	CONST. EASEMENT	PERMANENT DRAINAGE EASEMENT	PERMANENT UTILITY EASEMENT
1	CYNTHIA C. THOMAS	94.19 Ac.	0.17 Ac.	94.02 Ac.		1,720.00 SF	
2	REBECCA C. WEAVER	118.92 Ac.	0.18 Ac.	118.74 Ac.			
3	KENNETH A. & JULIA ANDERSON	48.85 Ac.	0.13 Ac.	48.72 Ac.			
4	DONNA C. & GARY COLLINS	118.79 Ac.	0.13 Ac.	118.66 Ac.			

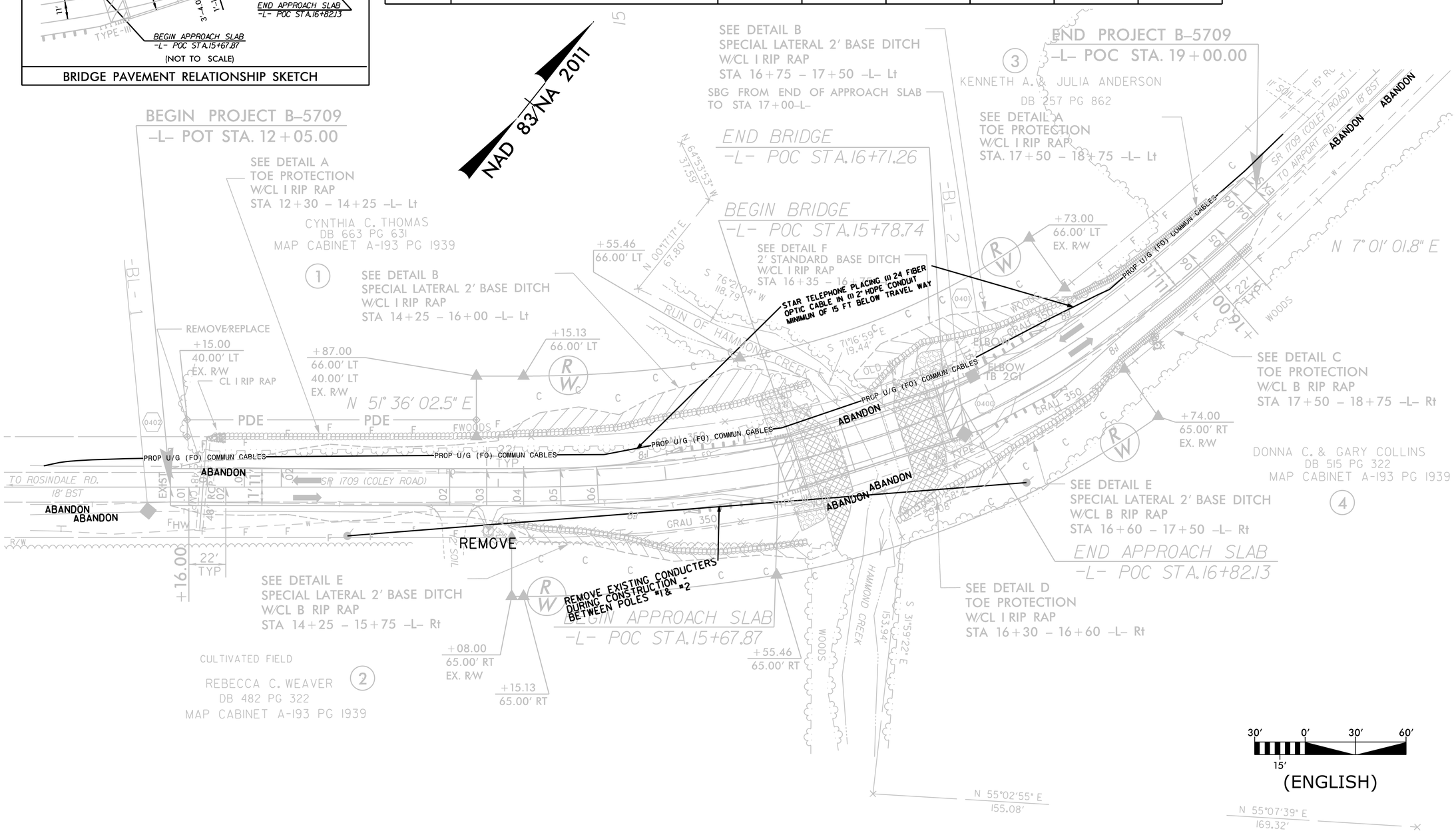

30' 0' 30' 60'
15'
(ENGLISH)

REVISIONS

8/17/99

STATE OF NORTH CAROLINA
DIVISION OF HIGHWAYS

CROSS SECTION INDEX

PROJ. REFERENCE NO.	SHEET NO.
B-5709	X-1A

STATE OF NORTH CAROLINA
DIVISION OF HIGHWAYS

CROSS-SECTION SUMMARY

NOTE: EARTHWORK QUANTITIES ARE CALCULATED BY THE ROADWAY DESIGN UNIT. THESE EARTHWORK QUANTITIES ARE BASED IN PART ON SUBSURFACE DATA PROVIDED BY THE GEOTECHNICAL ENGINEERING UNIT.

NOTE: EMBANKMENT COLUMN DOES NOT INCLUDE BACKFILL FOR UNDERCUT

Approximate quantities only. Unclassified excavation, borrow excavation, fine grading, clearing and grubbing, breaking of existing pavement and removal of existing pavement will be paid for at the lump sum price for "Grading".

Station L	Uncl. Exc. (cu. yd.)	Embt (cu. yd.)
12+05.00	0	0
12+25.00	1	1
12+50.00	1	3
12+75.00	1	4
13+00.00	1	5
13+25.00	1	6
13+50.00	1	6
13+75.00	1	7
14+00.00	1	10
14+25.00	9	17
14+50.00	19	25
14+75.00	22	41
15+00.00	22	72
15+25.00	24	100
15+50.00	41	109
15+75.00	69	84
15+78.74	13	9

Station L	Uncl. Exc. (cu. yd.)	Embt (cu. yd.)
16+71.26	0	0
16+75.00	10	8
17+00.00	60	58
17+25.00	41	63
17+50.00	25	57
17+75.00	9	37
18+00.00	0	16
18+25.00	0	10
18+50.00	1	7
18+75.00	1	5
19+00.00	2	2

8/23/99

0 2.5 5	PROJ. REFERENCE NO.	SHEET NO.
	B-5709	X-2

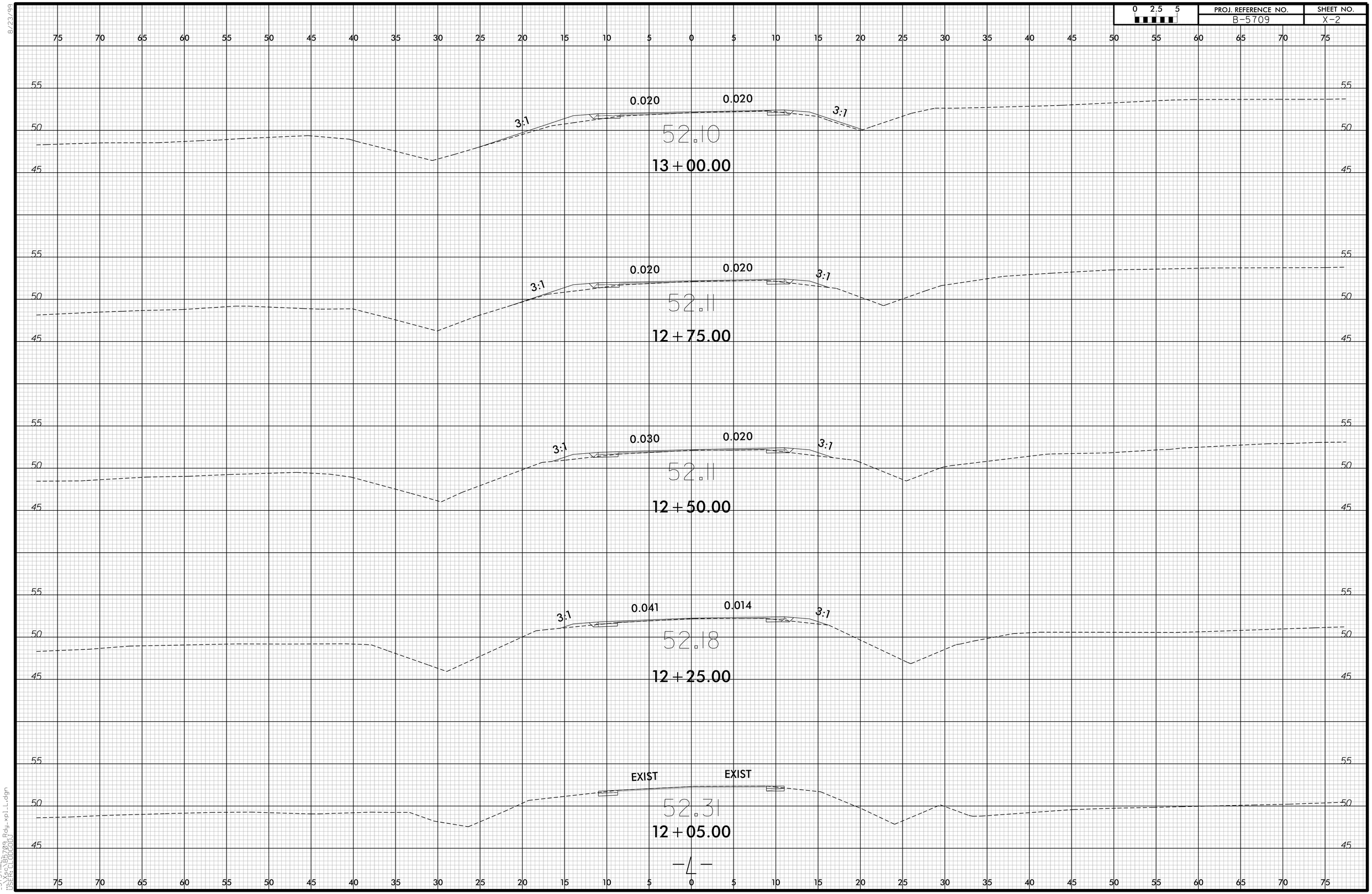

_SYSTIME
USER:
FILE:B5709_Rdy_xpl_L.dgn

8/23/99

0 2.5 5	PROJ. REFERENCE NO.	SHEET NO.
	B-5709	X-3

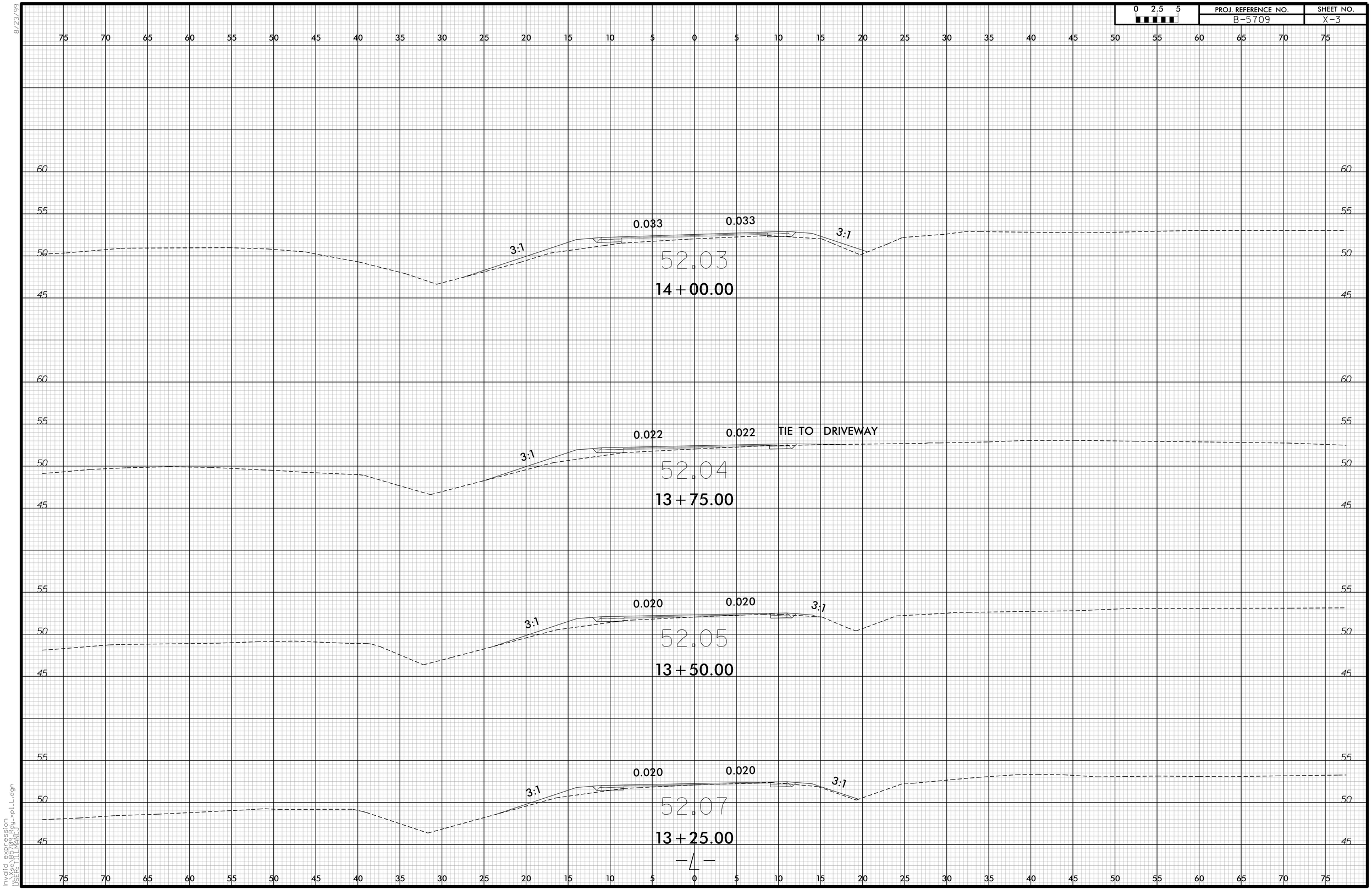

invalid expression
USER: BRYANG

0 2.5 5	PROJ. REFERENCE NO.	SHEET NO.
	B-5709	X-4

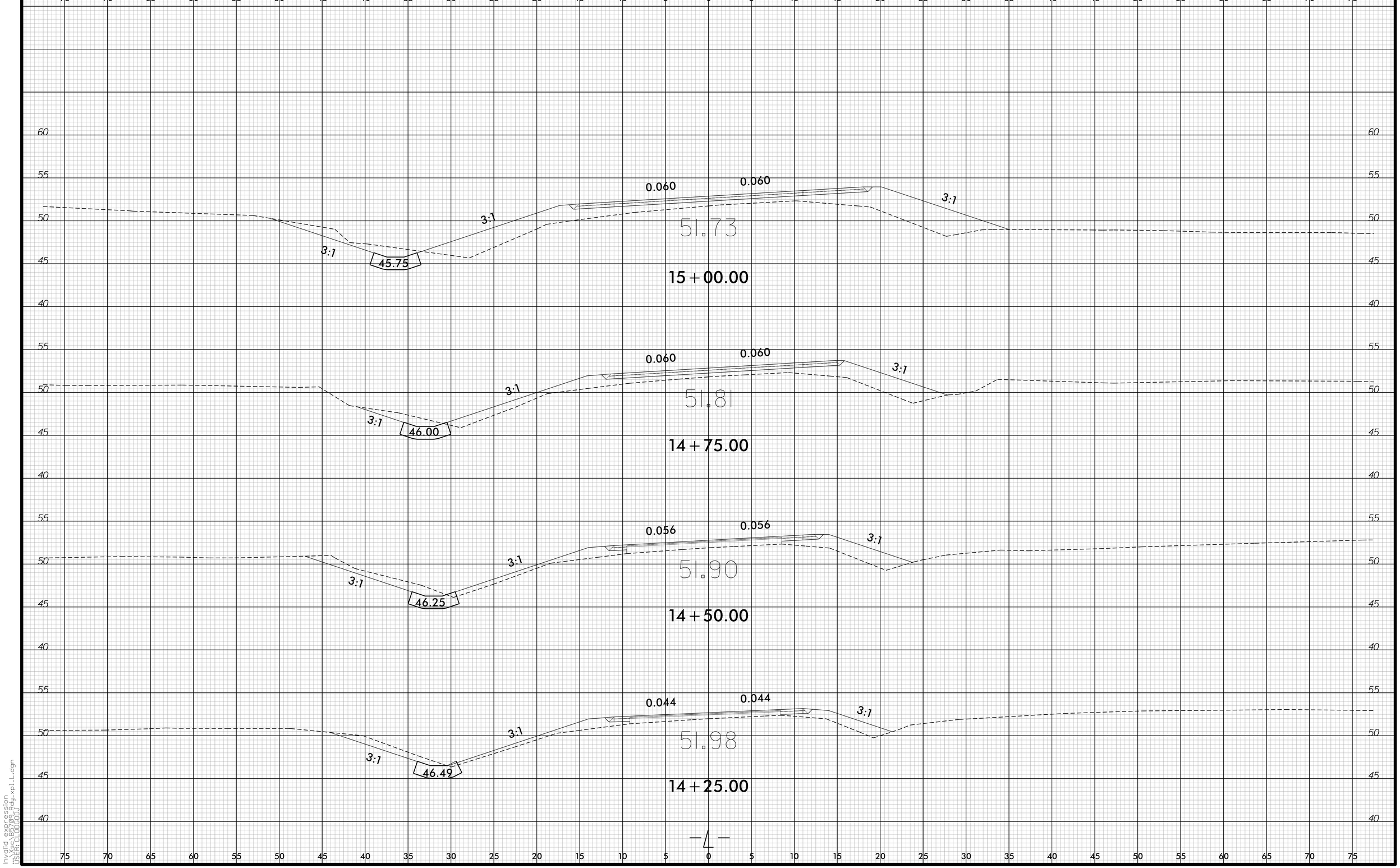

8/23/99

Invalid expression
$USER$cholloway_xpl_L.dgn

8/23/99

0 2.5 5	PROJ. REFERENCE NO.	SHEET NO.
	B-5709	X-5

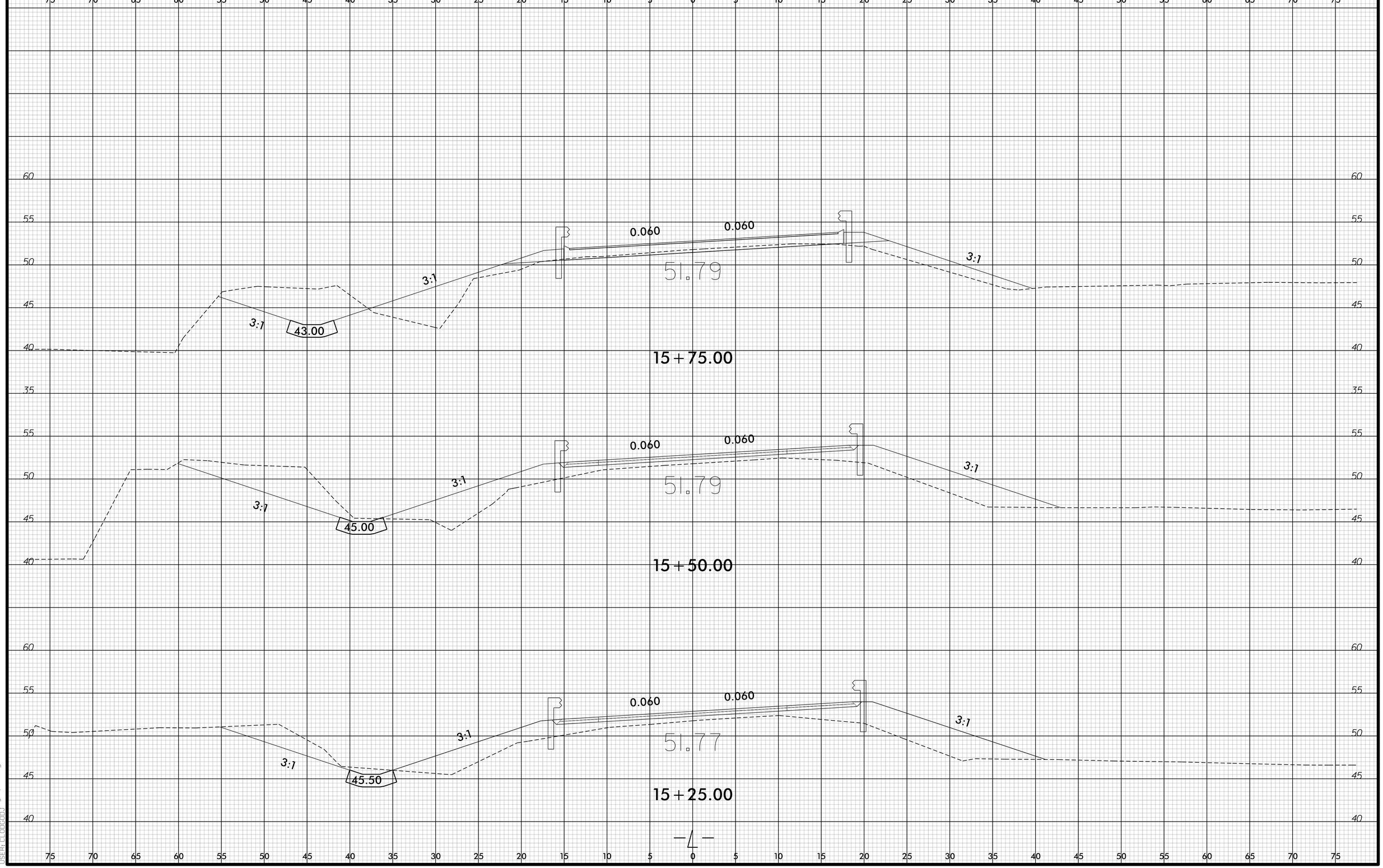

invalid expression
USER:cbu00001 DGN:bridge_xpl_L.dgn

8/23/99

0 2.5 5	PROJ. REFERENCE NO.	SHEET NO.
	B-5709	X-6

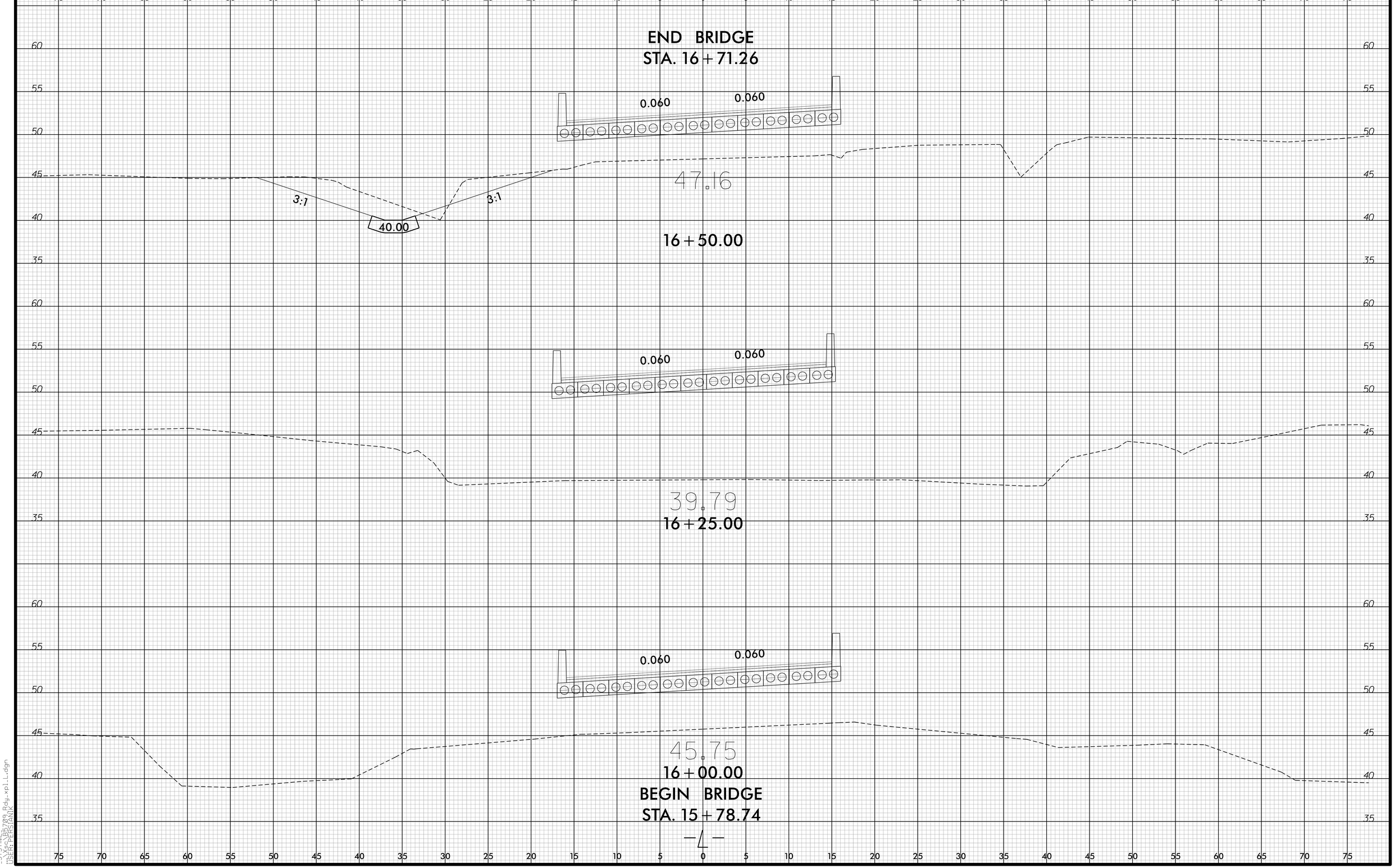

SYSTIME
B5709_Rdy_xpl_L.dgn
USER:PERSIANIK

PROJ. REFERENCE NO.	SHEET NO.
B-5709	X-7

0 2.5 5

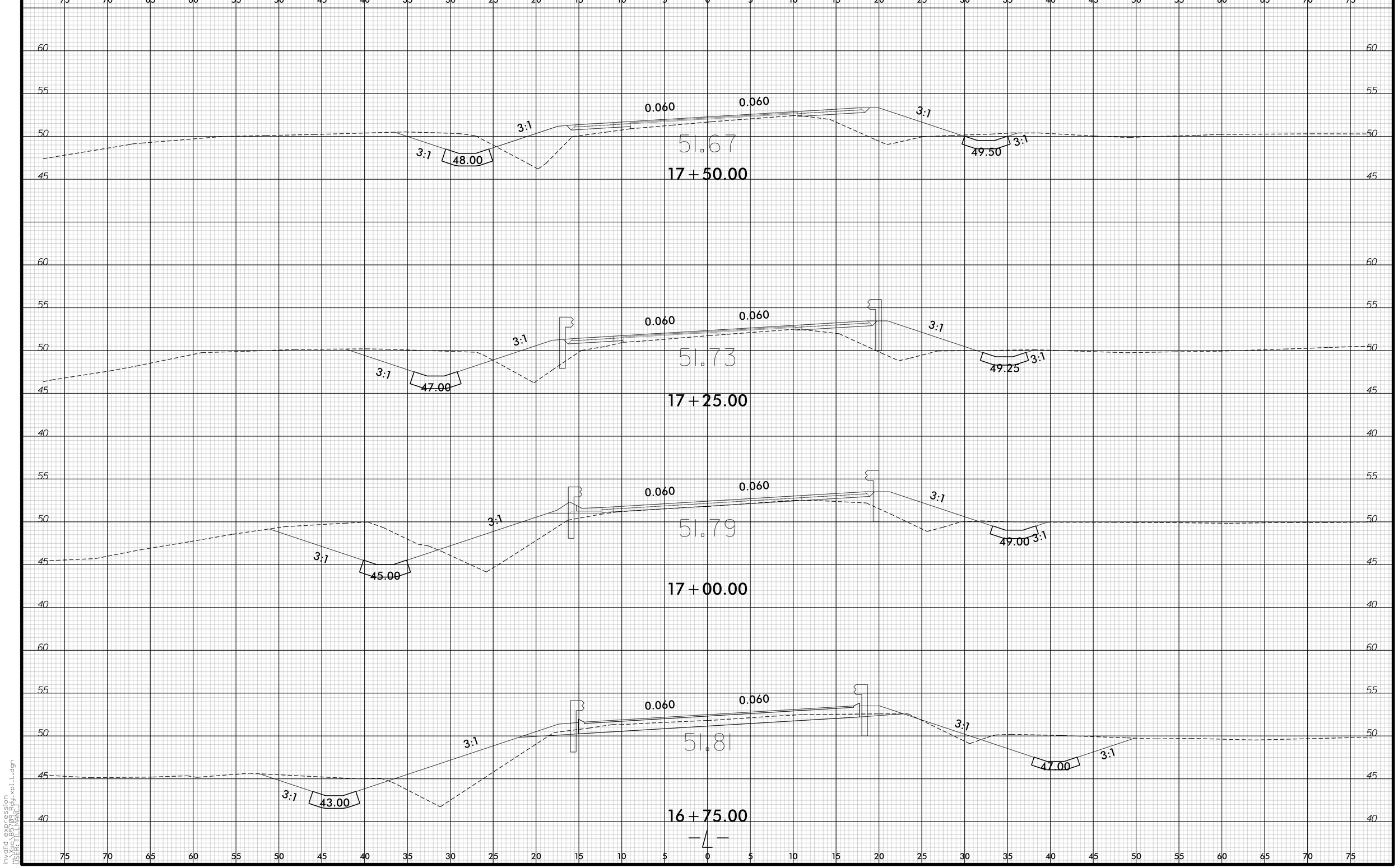

8/23/99

Invalid expression
USER: CHRISTIAN
FILE: C:\PROJ\B-5709_xpl_L.dgn

8/23/99

0 2.5 5	PROJ. REFERENCE NO.	SHEET NO.
	B-5709	X-8

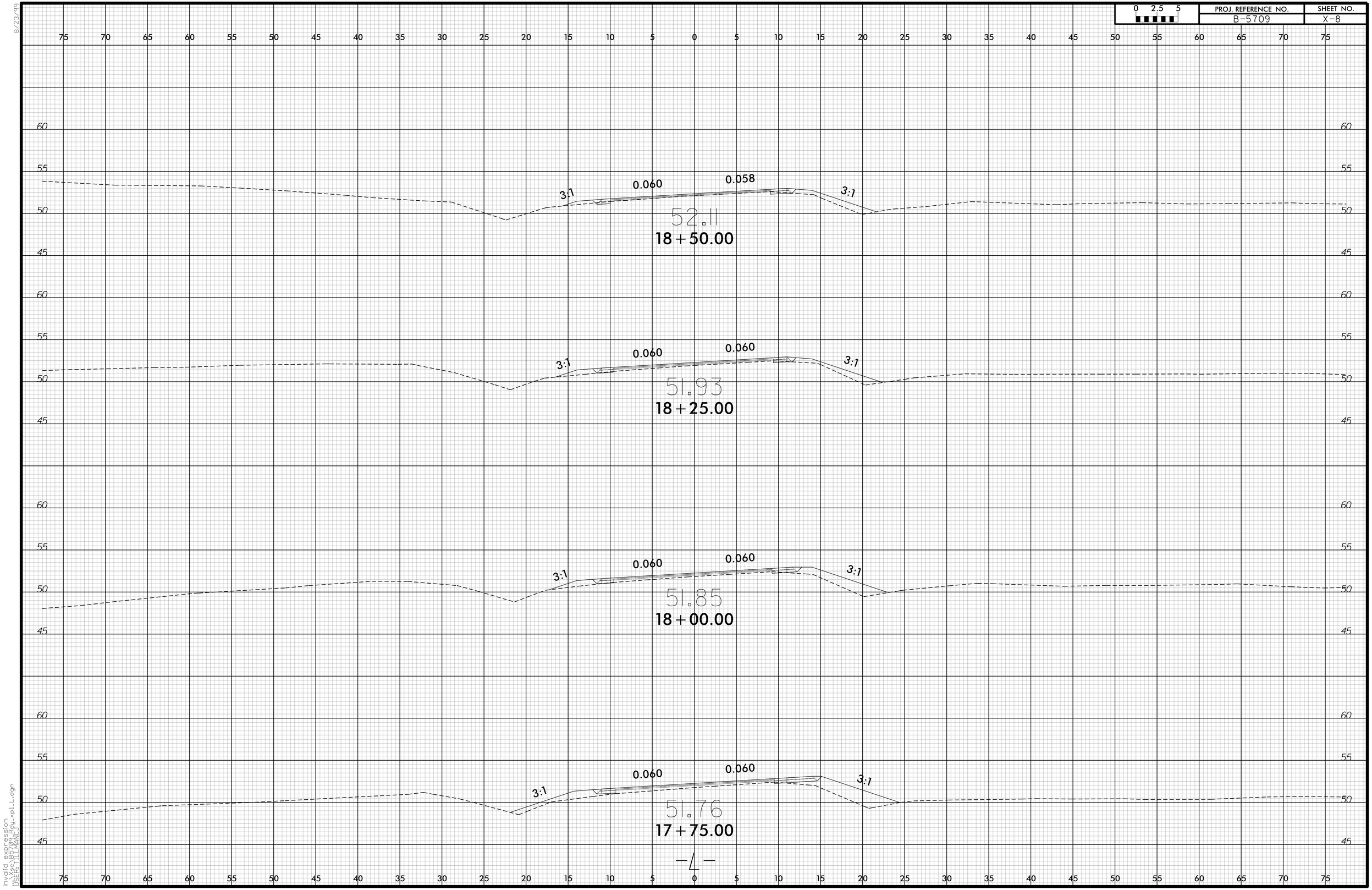

invalid expression
USER: CHRISTOPHER.KANE

8/23/99

0 2.5 5	PROJ. REFERENCE NO.	SHEET NO.
	B-5709	X-9

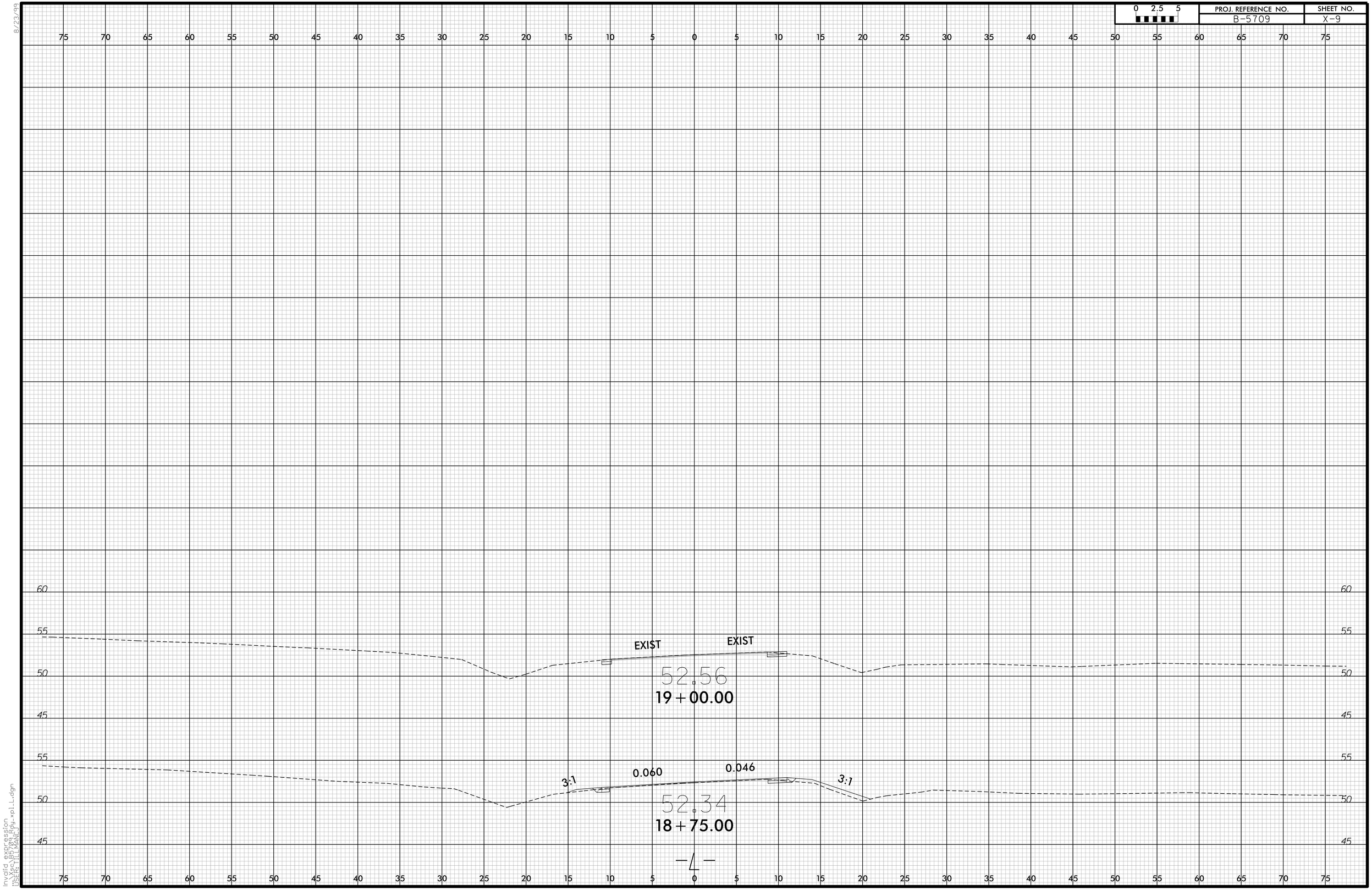

invalid expression
USER: CHRISTOPHER.KANG

TIP PROJECT: B–5709

CONTRACT: DF00156

STRUCTURE

STATE	STATE PROJECT REFERENCE NO.	SHEET NO.	TOTAL SHEETS
N.C.	B–5709	1	22

STATE PROJ. NO.	F. A. PROJ. NO.	DESCRIPTION
45663.1.1		P.E.
45663.2.1		R/W & UTILITIES
45663.3.1		CONST.

STATE OF NORTH CAROLINA
DIVISION OF HIGHWAYS

BLADEN COUNTY

LOCATION: BRIDGE NO. 080154 OVER HAMMOND CREEK ON SR 1709 (COLEY ROAD)

TYPE OF WORK: GRADING, DRAINAGE, PAVING, AND STRUCTURE

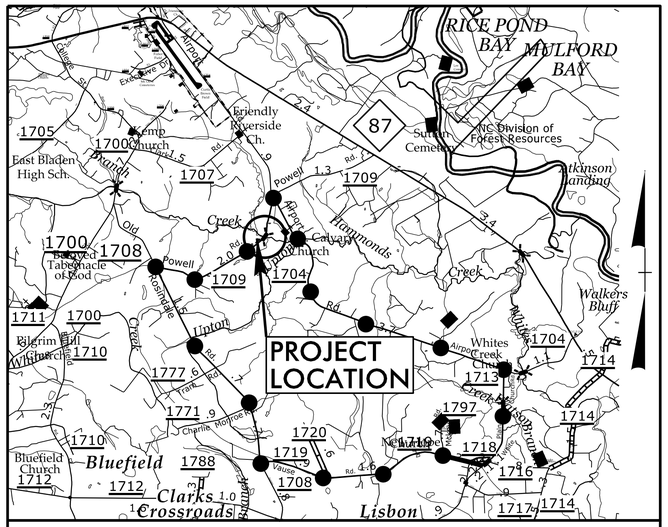

VICINITY MAP

●—●—●—● ***DENOTES OFF–SITE DETOUR***

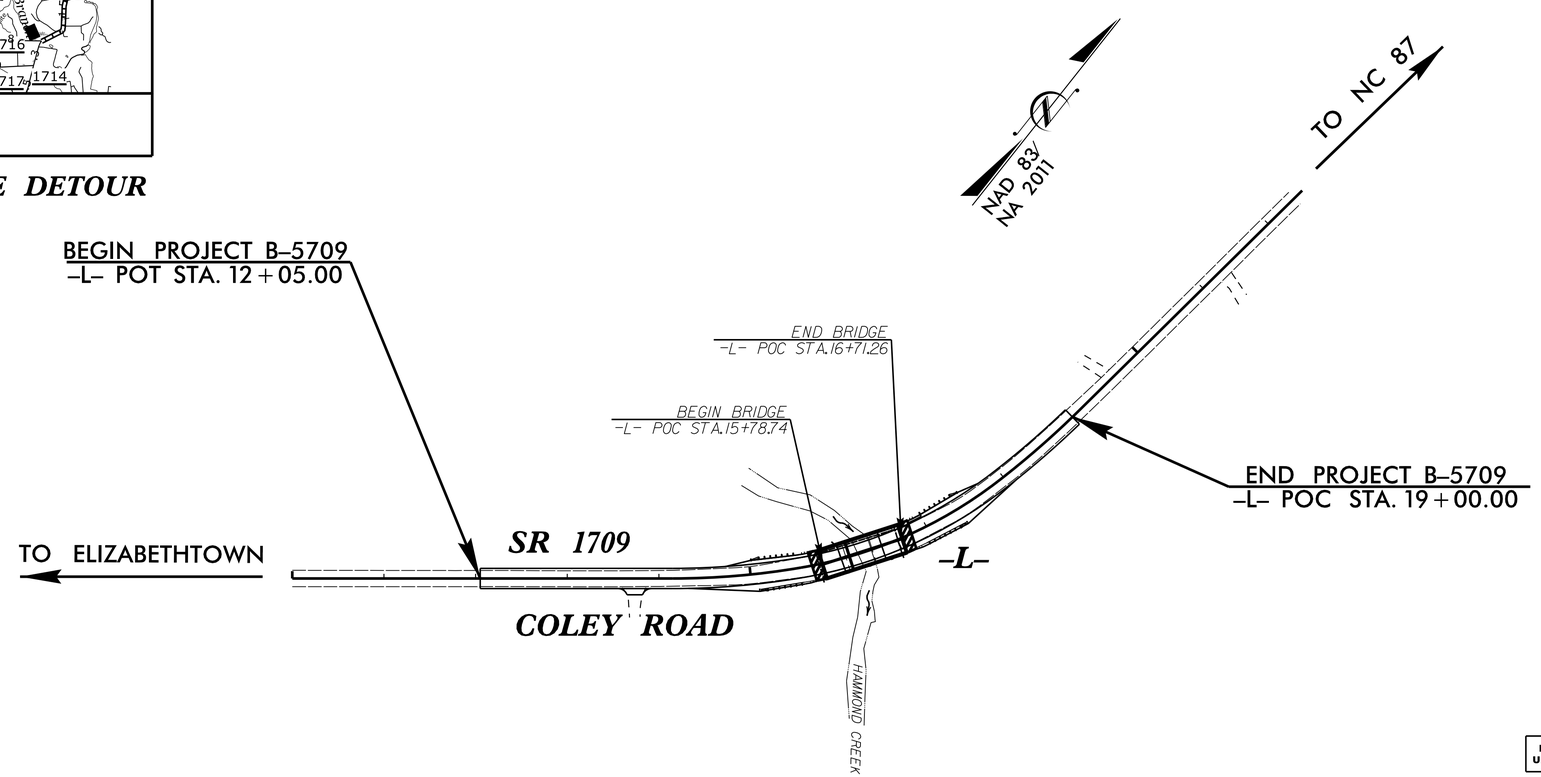

DOCUMENT NOT CONSIDERED FINAL UNLESS ALL SIGNATURES COMPLETED

STATE OF NORTH CAROLINA DEPARTMENT OF TRANSPORTATION

DESIGN DATA

ADT 2016 = 140
ADT 2036 = 253
K = NA %
D = NA %
T = 6 % *
V = 40 MPH
* TTST = DUAL

FUNC CLASS =
MINOR COLLECTOR
SUB REGIONAL TIER

PROJECT LENGTH

LENGTH ROADWAY TIP PROJECT B–5412 = 0.114 MILES

LENGTH STRUCTURE TIP PROJECT B–5412 = 0.018 MILES

TOTAL LENGTH TIP PROJECT B–5412 = 0.132 MILES

Prepared In the Office of:

DIVISION OF HIGHWAYS
STRUCTURES MANAGEMENT UNIT
1000 BIRCH RIDGE DR.
RALEIGH, N.C. 27610

2012 STANDARD SPECIFICATIONS

LETTING DATE :

JUNE 21, 2017

DAVID J. CLODGO, P.E.
PROJECT ENGINEER

JOSH B. TAYLOR, P.E.
PROJECT DESIGN ENGINEER

CDM Smith

CDM SMITH
5400 Glenwood Avenue, Suite 400
Raleigh, NC 27612–3228
NC COA No. F–1255

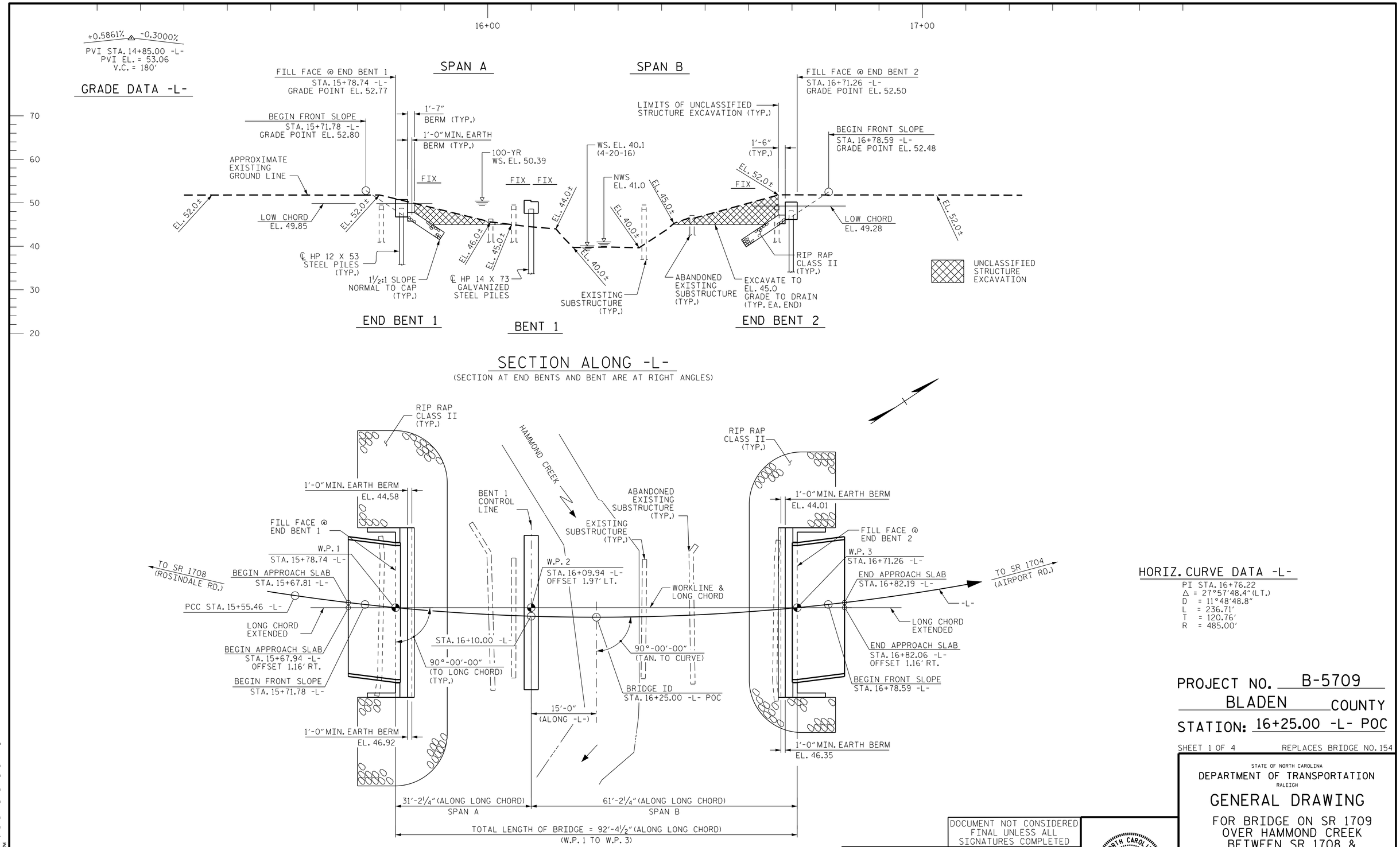

HORIZ. CURVE DATA -L-

PI STA. 16+76.22
Δ = 27°57'48.4" (LT.)
D = 11°48'48.8"
L = 236.71'
T = 120.76'
R = 485.00'

PROJECT NO. B-5709
BLADEN COUNTY
STATION: 16+25.00 -L- POC

SHEET 1 OF 4 REPLACES BRIDGE NO. 154

DOCUMENT NOT CONSIDERED FINAL UNLESS ALL SIGNATURES COMPLETED

CDM Smith
CDM SMITH
5400 Glenwood Avenue, Suite 400
Raleigh, NC 27612-3228
NC COA No. F-1255

DRAWN BY : A.L. STROUD DATE : 04/17
CHECKED BY : J.B. TAYLOR DATE : 04/17
DESIGN ENGINEER : J.B. TAYLOR DATE : 04/17

DWG. No.

NORTH CAROLINA PROFESSIONAL SEAL 33698 ENGINEER JOSHUA B. TAYLOR
5/17/2017
DocuSigned by: Joshua B. Taylor

STATE OF NORTH CAROLINA
DEPARTMENT OF TRANSPORTATION
RALEIGH

GENERAL DRAWING

FOR BRIDGE ON SR 1709
OVER HAMMOND CREEK
BETWEEN SR 1708 &
SR 1704

REVISIONS						
NO.	BY:	DATE:	NO.	BY:	DATE:	
1			3			
2			4			

SHEET NO. S-01
TOTAL SHEETS 22

FILE: c:\pw_pw1\taylorjb\d0349162\401_001_B5709_SMU_GD01_001_080154.dgn
DATE: 5/16/2017 4:24:12 PM

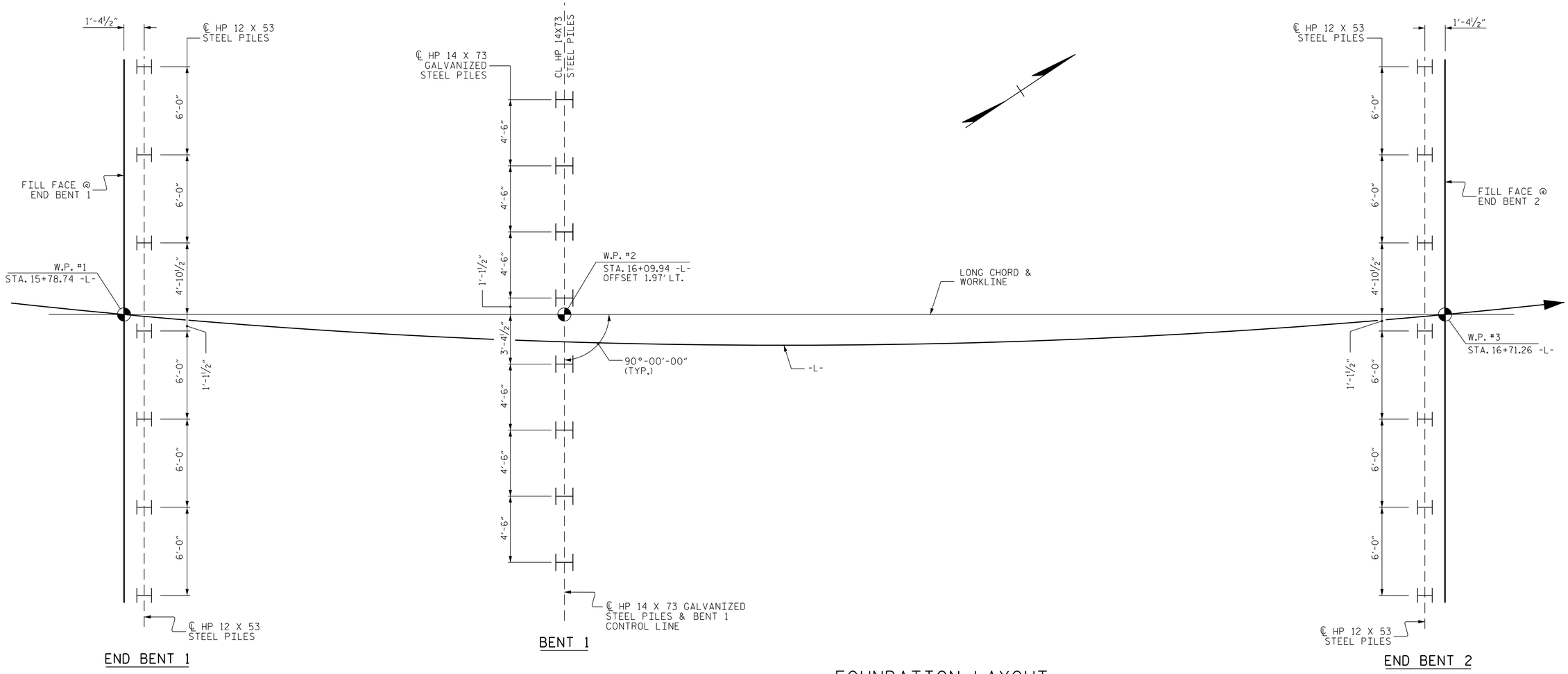

FOUNDATION LAYOUT

DIMENSIONS LOCATING PILES ARE SHOWN TO PILE CENTERLINES

NOTES

FOR PILES, SEE GEOTECHNICAL SPECIAL PROVISIONS AND SECTION 450 OF THE STANDARD SPECIFICATIONS.

PILES AT END BENT 1 ARE DESIGNED FOR A FACTORED RESISTANCE OF 51 TONS PER PILE.

DRIVE PILES AT END BENT 1 TO A REQUIRED DRIVING RESISTANCE OF 85 TONS PER PILE.

PILES AT BENT 1 ARE DESIGNED FOR A FACTORED RESISTANCE OF 100 TONS PER PIER.

DRIVE PILES AT BENT 1 TO REQUIRED DRIVING RESISTANCE OF 175 TONS PER PILE. THIS REQUIRED DRIVING RESISTANCE INCLUDES ADDITIONAL RESISTANCE FOR SCOUR.

PILES AT END BENT 2 ARE DESIGNED FOR A FACTORED RESISTANCE OF 74 TONS PER PILE.

DRIVE PILES AT END BENT 2 TO A REQUIRED DRIVING RESISTANCE OF 124 TONS PER PILE.

INSTALL PILES AT BENT 1 TO A TIP ELEVATION NO HIGHER THAN 24.0 FT.

THE SCOUR CRITICAL ELEVATION FOR BENT 1 IS ELEVATION 36.0 FT. THE SCOUR CRITICAL ELEVATIONS ARE USED TO MONITOR POSSIBLE SCOUR PROBLEMS DURING THE LIFE OF THE STRUCTURE.

TESTING PILES WITH THE PDA DURING DRIVING, RESTRIKING OR REDRIVING MAY BE REQUIRED. THE ENGINEER WILL DETERMINE THE NEED FOR PDA TESTING. FOR PDA TESTING, SEE SECTION 450 OF THE STANDARD SPECIFICATIONS.

IT HAS BEEN ESTIMATED THAT A HAMMER WITH AN EQUIVALENT RATED ENERGY IN THE RANGE OF 30 TO 40 FT-KIPS PER BLOW WILL BE REQUIRED TO DRIVE PILES AT END BENTS 1 & 2. THIS ESTIMATED ENERGY RANGE DOES NOT RELEASE THE CONTRACTOR FROM PROVIDING DRIVING EQUIPMENT IN ACCORDANCE WITH SUBARTICLE 450-3(D)(2) OF THE STANDARD SPECIFICATIONS.

IT HAS BEEN ESTIMATED THAT A HAMMER WITH AN EQUIVALENT RATED ENERGY IN THE RANGE OF 40 TO 50 FT-KIPS PER BLOW WILL BE REQUIRED TO DRIVE PILES AT BENT 1. THIS ESTIMATED ENERGY RANGE DOES NOT RELEASE THE CONTRACTOR FROM PROVIDING DRIVING EQUIPMENT IN ACCORDANCE WITH SUBARTICLE 450-3(D)(2) OF THE STANDARD SPECIFICATIONS.

PROJECT NO. B-5709
BLADEN COUNTY
STATION: 16+25.00 -L-

SHEET 2 OF 4

DOCUMENT NOT CONSIDERED FINAL UNLESS ALL SIGNATURES COMPLETED

CDM Smith
CDM SMITH
5400 Glenwood Avenue, Suite 400
Raleigh, NC 27612-3228
NC COA No. F-1255

DRAWN BY : A.L. STROUD DATE : 04/17
CHECKED BY : J.B. TAYLOR DATE : 04/17
DESIGN ENGINEER : J.B. TAYLOR DATE : 04/17

DWG. No.

NORTH CAROLINA PROFESSIONAL SEAL 33698 ENGINEER JOSHUA B. TAYLOR
5/17/2017
DocuSigned by: Joshua B. Taylor

STATE OF NORTH CAROLINA
DEPARTMENT OF TRANSPORTATION
RALEIGH

GENERAL DRAWING
FOR BRIDGE ON SR 1709
OVER HAMMOND CREEK
BETWEEN SR 1708 AND SR 1704

REVISIONS						SHEET NO.
NO.	BY:	DATE:	NO.	BY:	DATE:	S-02
1			3			TOTAL SHEETS
2			4			22

FILE: c:\pw_pll\taylorjb\d0349162\401_003_B5709_SMU_GD02_002_080154.dgn
DATE: 5/16/2017 2:19:57 PM

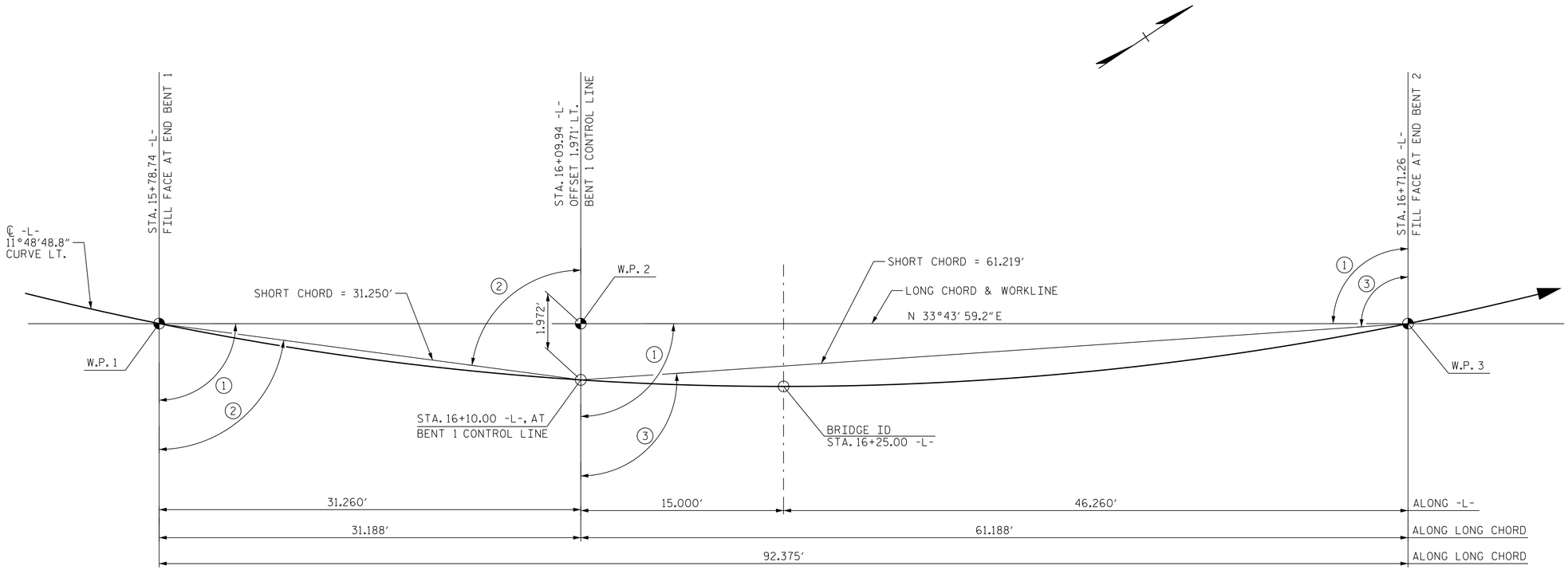

NOTE: ALL BENTS ARE PARALLEL

LONG CHORD LAYOUT

1. 90°00' 00"
2. 86°22' 53"
3. 91°50' 46"

PROJECT NO. B-5709

BLADEN COUNTY

STATION: 16+25.00 -L-

SHEET 3 OF 4

STATE OF NORTH CAROLINA
DEPARTMENT OF TRANSPORTATION
RALEIGH

GENERAL DRAWING

FOR BRIDGE ON SR 1709
OVER HAMMOND CREEK
BETWEEN ROSINDALE RD &
AIRPORT RD

DOCUMENT NOT CONSIDERED FINAL UNLESS ALL SIGNATURES COMPLETED

CDM Smith
CDM SMITH
5400 Glenwood Avenue, Suite 400
Raleigh, NC 27612-3228
NC COA No. F-1255

DRAWN BY : A.L. STROUD DATE : 04/17
CHECKED BY : J.B. TAYLOR DATE : 04/17
DESIGN ENGINEER : J.B. TAYLOR DATE : 04/17

DWG. No.

NORTH CAROLINA PROFESSIONAL SEAL 33698 ENGINEER JOSHUA B. TAYLOR
5/17/2017
DocuSigned by: Joshua B. Taylor

REVISIONS						SHEET NO.
NO.	BY:	DATE:	NO.	BY:	DATE:	S-03
1			3			TOTAL SHEETS
2			4			22

FILE: c:\pw_pll\taylorjb\d0349121\01_005_B5709_SMU_GD03_003_080154.dgn
DATE: 5/16/2017 2:20:26 PM

TOTAL BILL OF MATERIAL

	REMOVAL OF EXISTING STRUCTURE	PDA TESTING	UNCLASSIFIED STRUCTURE EXCAVATION	CLASS A CONCRETE	BRIDGE APPROACH SLABS	REINFORCING STEEL	PILE DRIVING SETUP FOR HP 12 X 53 STEEL PILES	PILE DRIVING SETUP FOR HP14X73 GALV STEEL PILES	HP 12 X 53 STEEL PILES		HP 14 X 73 GALVANIZED STEEL PILES		VERTICAL CONCRETE BARRIER RAIL	RIP RAP CLASS II (2'-0" THICK)	GEOTEXTILE FOR DRAINAGE	ELASTOMERIC BEARINGS	3'-0" X 1'-9" PRESTRESSED CONCRETE CORED SLABS		3'-0" X 2'-0" PRESTRESSED CONCRETE CORED SLABS		ASBESTOS ASSESSMENT
	LUMP SUM	NO.	LUMP SUM	CU. YDS.	LUMP SUM	LBS.	EA.	EA.	NO.	LIN. FT.	NO.	LIN. FT.	LIN. FT.	TON	SQ. YD.	LUMP SUM	NO.	LIN. FT.	NO.	LIN. FT.	LUMP SUM
SUPERSTRUCTURE													180.50			LUMP SUM	11	330	11	660	
END BENT 1			LUMP SUM	21.6		2,640	7		7	385				95	105						
BENT 1				11.4		2,301		8			8	520									
END BENT 2			LUMP SUM	21.9		2,651	7		7	385				78	87						
TOTAL	LUMP SUM	2	LUMP SUM	54.9	LUMP SUM	7,592	14	8	14	770	8	520	180.50	173	192	LUMP SUM	11	330	11	660	LUMP SUM

HYDRAULIC DATA

DESIGN DISCHARGE	= 1100 CFS
FREQUENCY OF DESIGN FLOOD	= 25 YR.
DESIGN HIGH WATER ELEVATION	= 49.1
DRAINAGE AREA	= 12.0 SQ.MI.
BASIC DISCHARGE (Q100)	= 1700 CFS
BASIC HIGH WATER ELEVATION	= 50.39

OVERTOPPING FLOOD DATA

OVERTOPPING DISCHARGE	= 2800 CFS
FREQUENCY OF OVERTOPPING FLOOD	= 500+ YR.
OVERTOPPING FLOOD ELEVATION (OT OCCURS AT STA. 12+76.88 -L-)	= 52.41

B.M. #1: RR SPIKE IN BASE OF 12" PINE TREE; 56.6' RIGHT OF STA. 20+53.40 -L-, EL. 53.82.

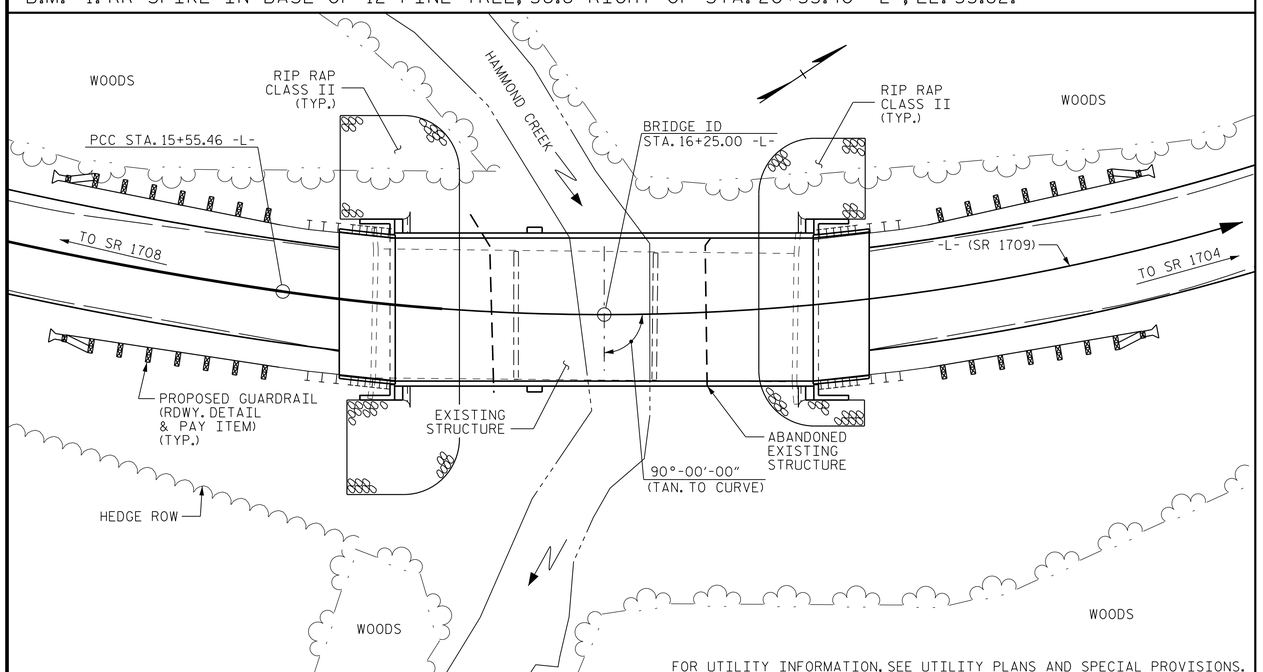

FOR UTILITY INFORMATION, SEE UTILITY PLANS AND SPECIAL PROVISIONS.

LOCATION SKETCH

NOTES:

ASSUMED LIVE LOAD = HL-93 OR ALTERNATE LOADING.

THIS BRIDGE HAS BEEN DESIGNED IN ACCORDANCE WITH THE AASHTO LRFD BRIDGE DESIGN SPECIFICATIONS

THIS BRIDGE IS LOCATED IN SEISMIC PERFORMANCE ZONE 1.

THIS BRIDGE SHALL BE CONSTRUCTED USING TOP-DOWN CONSTRUCTION METHODS. THE USE OF A TEMPORARY CAUSEWAY OR WORK BRIDGE IS NOT PERMITTED.

FOR OTHER DESIGN DATA AND GENERAL NOTES, SEE SHEET S-N.

FOR EROSION CONTROL MEASURES SEE EROSION CONTROL PLANS.

THIS STRUCTURE HAS BEEN DESIGNED IN ACCORDANCE WITH "HEC-18 EVALUATING SCOUR AT BRIDGES".

FOR ASBESTOS ASSESSMENT FOR BRIDGE DEMOLITION AND RENOVATION ACTIVITIES, SEE SPECIAL PROVISIONS.

FOR INTERIOR BENT 1, ONLY PARTIAL GALVANIZING OF THE PILES IS REQUIRED. SEE BENT 1 SHEET FOR REQUIRED GALVANIZED LENGTHS. PAYMENT FOR PARTIALLY GALVANIZED PILES WILL BE MADE UNDER THE CONTRACT UNIT PRICE FOR GALVANIZED STEEL PILES.

REMOVAL OF THE EXISTING BRIDGE SHALL BE PERFORMED SO AS NOT TO ALLOW DEBRIS TO FALL INTO THE WATER. THE CONTRACTOR SHALL REMOVE THE BRIDGE AND SUBMIT PLANS FOR DEMOLITION IN ACCORDANCE WITH ARTICLE 402-2 OF THE STANDARD SPECIFICATIONS

FOR GROUT FOR STRUCTURES, SEE SPECIAL PROVISIONS.

FOR CRANE SAFETY, SEE SPECIAL PROVISIONS.

FOR SUBMITTAL OF WORKING DRAWINGS, SEE SPECIAL PROVISIONS.

FOR FALSEWORK AND FORMWORK, SEE SPECIAL PROVISIONS.

THE SUBSTRUCTURE OF THE EXISTING BRIDGE INDICATED ON THE PLANS IS FROM THE BEST INFORMATION AVAILABLE. SINCE THIS INFORMATION IS SHOWN FOR THE CONVENIENCE OF THE CONTRACTOR, THE CONTRACTOR SHALL HAVE NO CLAIM WHATSOEVER AGAINST THE DEPARTMENT OF TRANSPORTATION FOR ANY DELAYS OR ADDITIONAL COST INCURRED BASED ON DIFFERENCES BETWEEN THE EXISTING BRIDGE SUBSTRUCTURE SHOWN ON THE PLANS AND THE ACTUAL CONDITIONS AT THE PROJECT SITE.

THE MATERIAL SHOWN IN THE CROSS-HATCHED AREA SHALL BE EXCAVATED FOR A DISTANCE OF 30 FT. LEFT SIDE, 55 FT. RIGHT SIDE AT BOTH END BENTS OF CENTERLINE ROADWAY AS DIRECTED BY THE ENGINEER. THIS WORK WILL BE PAID FOR AT THE CONTRACT LUMP SUM PRICE FOR UNCLASSIFIED STRUCTURE EXCAVATION. SEE SECTION 412 OF THE STANDARD SPECIFICATIONS.

INASMUCH AS THE PAINT SYSTEM ON THE EXISTING STRUCTURAL STEEL CONTAINS LEAD, THE CONTRACTOR'S ATTENTION IS DIRECTED TO ARTICLE 107-1 OF THE STANDARD SPECIFICATIONS. ANY COSTS RESULTING FROM COMPLIANCE WITH APPLICABLE STATE OR FEDERAL REGULATIONS PERTAINING TO HANDLING OF MATERIALS CONTAINING LEAD BASED PAINT SHALL BE INCLUDED IN THE BID PRICE FOR "REMOVAL OF EXISTING STRUCTURE AT STATION 16+25.00 -L-."

THE EXISTING STRUCTURE CONSISTING OF 3 SPANS: 1 @ 30'-4", 1 @ 30'-0", AND 1 @ 30'-4" WITH A CLEAR ROADWAY WIDTH OF 28'-0" WITH A 3" ASPHALT WEARING SURFACE STEEL PLANK DECK ON STEEL I-BEAMS ON TIMBER CAPS ON TIMBER PILES AND LOCATED AT THE PROPOSED STRUCTURE SHALL BE REMOVED. THE EXISTING BRIDGE IS PRESENTLY POSTED FOR LOAD LIMIT.

ASPHALT WEARING SURFACE IS INCLUDED IN ROADWAY QUANTITY ON ROADWAY PLANS.

PROJECT NO. B-5709
BLADEN COUNTY
STATION: 16+25.00 -L-

SHEET 4 OF 4

STATE OF NORTH CAROLINA
DEPARTMENT OF TRANSPORTATION
RALEIGH

GENERAL DRAWING

FOR BRIDGE ON SR 1709 OVER HAMMOND CREEK BETWEEN SR 1708 & SR 1704

DOCUMENT NOT CONSIDERED FINAL UNLESS ALL SIGNATURES COMPLETED

CDM Smith
CDM SMITH
5400 Glenwood Avenue, Suite 400
Raleigh, NC 27612-3228
NC COA No. F-1255

DRAWN BY : A.L. STROUD DATE : 04/17
CHECKED BY : J.B. TAYLOR DATE : 04/17
DESIGN ENGINEER : J.B. TAYLOR DATE : 04/17

DWG. No.

NORTH CAROLINA PROFESSIONAL SEAL 33698 ENGINEER JOSHUA B. TAYLOR
5/19/2017
DocuSigned by: Joshua B. Taylor

REVISIONS						SHEET NO.
NO.	BY:	DATE:	NO.	BY:	DATE:	S-04
1			3			TOTAL SHEETS
2			4			22

FILE/LE: c:\projects\jobs\B-5709\B-5709_GD_01.dgn
DATE/TE: 5/19/2017 10:38:43 AM

LOAD AND RESISTANCE FACTOR RATING (LRFD) SUMMARY FOR PRESTRESSED CONCRETE GIRDERS

LEVEL		VEHICLE	WEIGHT (W) (TONS)	CONTROLLING LOAD RATING	MINIMUM RATING FACTORS (RF)	TONS = W X RF	STRENGTH I LIMIT STATE											SERVICE III LIMIT STATE						COMMENT NUMBER
							LIVELOAD FACTORS	MOMENT					SHEAR					LIVELOAD FACTORS	MOMENT					
								DISTRIBUTION FACTORS (DF)	RATING FACTOR	SPAN	GIRDER LOCATION	DISTANCE FROM LEFT END OF SPAN (ft)	DISTRIBUTION FACTORS (DF)	RATING FACTOR	SPAN	GIRDER LOCATION	DISTANCE FROM LEFT END OF SPAN (ft)		DISTRIBUTION FACTORS (DF)	RATING FACTOR	SPAN	GIRDER LOCATION	DISTANCE FROM LEFT END OF SPAN (ft)	
DESIGN LOAD RATING		HL-93(Inv)	N/A	(1)	1.037	--	1.75	0.283	1.83	30'	EL	14.5	0.574	**1.04**	30'	EL	**1.45**	0.80	0.283	1.58	30'	EL	14.5	
		HL-93(Opr)	N/A	--	1.344	--	1.35	0.283	2.38	30'	EL	14.5	0.574	1.34	30'	EL	1.45	N/A	--	--	--	--	--	
		HS-20(Inv)	36.000	(2)	1.183	42.587	1.75	0.283	2.53	30'	EL	11.6	0.574	**1.18**	30'	EL	**1.45**	0.80	0.283	2.20	30'	EL	11.6	
		HS-20(Opr)	36.000	--	1.533	55.205	1.35	0.283	3.28	30'	EL	11.6	0.574	1.53	30'	EL	1.45	N/A	--	--	--	--	--	
LEGAL LOAD RATING	SV	SNSH	13.500	--	2.895	39.081	1.4	0.283	5.18	30'	EL	14.5	0.574	2.89	30'	EL	1.45	0.80	0.283	3.56	30'	EL	14.5	
		SNGARBS2	20.000	--	2.240	44.792	1.4	0.283	4.53	30'	EL	11.6	0.574	2.24	30'	EL	1.45	0.80	0.283	3.15	30'	EL	11.6	
		SNAGRIS2	22.000	--	2.157	47.463	1.4	0.283	4.6	30'	EL	11.6	0.574	2.16	30'	EL	1.45	0.80	0.283	3.20	30'	EL	11.6	
		SNCOTTS3	27.250	--	1.462	39.849	1.4	0.283	2.6	30'	EL	14.5	0.574	1.46	30'	EL	1.45	0.80	0.283	1.79	30'	EL	14.5	
		SNAGGRS4	34.925	--	1.346	46.999	1.4	0.283	2.5	30'	EL	14.5	0.574	1.35	30'	EL	1.45	0.80	0.283	1.72	30'	EL	14.5	
		SNS5A	35.550	--	1.427	50.733	1.4	0.283	2.42	30'	EL	14.5	0.574	1.43	30'	EL	1.45	0.80	0.283	1.67	30'	EL	14.5	
		SNS6A	39.950	--	1.341	53.59	1.4	0.283	2.29	30'	EL	14.5	0.574	1.34	30'	EL	1.45	0.80	0.283	1.58	30'	EL	14.5	
		SNS7B	42.000	--	1.369	57.505	1.4	0.283	2.23	30'	EL	14.5	0.574	1.37	30'	EL	1.45	0.80	0.283	1.53	30'	EL	14.5	
	TTST	TNAGRIT3	33.000	--	1.593	52.58	1.4	0.283	2.97	30'	EL	14.5	0.574	1.59	30'	EL	1.45	0.80	0.283	2.04	30'	EL	14.5	
		TNT4A	33.075	--	1.483	49.043	1.4	0.283	2.82	30'	EL	14.5	0.574	1.48	30'	EL	1.45	0.80	0.283	1.94	30'	EL	14.5	
		TNT6A	41.600	--	1.433	59.622	1.4	0.283	2.56	30'	EL	14.5	0.574	1.43	30'	EL	1.45	0.80	0.283	1.76	30'	EL	14.5	
		TNT7A	42.000	--	1.363	57.264	1.4	0.283	2.64	30'	EL	14.5	0.574	1.36	30'	EL	1.45	0.80	0.283	1.82	30'	EL	14.5	
		TNT7B	42.000	--	1.331	55.915	1.4	0.283	2.49	30'	EL	14.5	0.574	1.33	30'	EL	1.45	0.80	0.283	1.72	30'	EL	14.5	
		TNAGRIT4	43.000	--	1.287	55.356	1.4	0.283	2.58	30'	EL	14.5	0.574	1.29	30'	EL	1.45	0.80	0.283	1.78	30'	EL	14.5	
		TNAGT5A	45.000	--	1.381	62.151	1.4	0.283	2.5	30'	EL	14.5	0.574	1.38	30'	EL	1.45	0.80	0.283	1.72	30'	EL	14.5	
		TNAGT5B	45.000	(3)	1.212	54.54	1.4	0.283	2.41	30'	EL	11.6	0.574	**1.21**	30'	EL	**1.45**	0.80	0.283	1.66	30'	EL	11.6	

LOAD FACTORS:

DESIGN LOAD RATING FACTORS	LIMIT STATE	γ_{DC}	γ_{DW}
	STRENGTH I	1.25	1.50
	SERVICE III	1.00	1.00

NOTES:

MINIMUM RATING FACTORS ARE BASED ON THE STRENGTH I AND SERVICE III LIMIT STATES.

ALLOWABLE STRESSES FOR SERVICE III LIMIT STATE ARE AS REQUIRED FOR DESIGN.

COMMENTS:

1.
2.
3.
4.

(#) CONTROLLING LOAD RATING

(1) DESIGN LOAD RATING (HL-93)

(2) DESIGN LOAD RATING (HS-20)

(3) LEGAL LOAD RATING **

** SEE CHART FOR VEHICLE TYPE

GIRDER LOCATION

I - INTERIOR GIRDER
EL - EXTERIOR LEFT GIRDER
ER - EXTERIOR RIGHT GIRDER

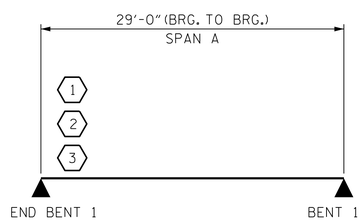

LRFR SUMMARY

FOR SPAN A

PROJECT NO. B-5709
BLADEN COUNTY
STATION: 16+25.00 -L-

DOCUMENT NOT CONSIDERED FINAL UNLESS ALL SIGNATURES COMPLETED

CDM Smith
CDM SMITH
5400 Glenwood Avenue, Suite 400
Raleigh, NC 27612-3228
NC COA No. F-1255

DRAWN BY : A.L. SARGENT ROUD DATE : 04/17
CHECKED BY : J.B. TAYLOR DATE : 04/17
DESIGN ENGINEER : J.B. TAYLOR DATE : 04/17

DWG. No.

5/17/2017
NORTH CAROLINA PROFESSIONAL SEAL 33698 ENGINEER JOSHUA B. TAYLOR
DocuSigned by: Joshua B. Taylor

STATE OF NORTH CAROLINA
DEPARTMENT OF TRANSPORTATION
RALEIGH

LRFR SUMMARY FOR 30' CORED SLAB UNIT 90° SKEW SPAN A
(NON-INTERSTATE TRAFFIC)

REVISIONS						SHEET NO.
NO.	BY:	DATE:	NO.	BY:	DATE:	S-05
1			3			TOTAL SHEETS
2			4			22

FILE: c:\pw_pdl\taylorjb\d0349162\B5709_SMU_LRFR_002_080154.dgn
DATE: 5/16/2017 2:21:37 PM

LOAD AND RESISTANCE FACTOR RATING (LRFD) SUMMARY FOR PRESTRESSED CONCRETE GIRDERS

LEVEL		VEHICLE	WEIGHT (W) (TONS)	CONTROLLING LOAD RATING	MINIMUM RATING FACTORS (RF)	TONS = W X RF	STRENGTH I LIMIT STATE											SERVICE III LIMIT STATE						COMMENT NUMBER
								MOMENT					SHEAR						MOMENT					
							LIVELOAD FACTORS	DISTRIBUTION FACTORS (DF)	RATING FACTOR	SPAN	GIRDER LOCATION	DISTANCE FROM LEFT END OF SPAN (ft)	DISTRIBUTION FACTORS (DF)	RATING FACTOR	SPAN	GIRDER LOCATION	DISTANCE FROM LEFT END OF SPAN (ft)	LIVELOAD FACTORS	DISTRIBUTION FACTORS (DF)	RATING FACTOR	SPAN	GIRDER LOCATION	DISTANCE FROM LEFT END OF SPAN (ft)	
DESIGN LOAD RATING		HL-93(Inv)	N/A	(1)	2.073	--	1.75	0.28	3.04	60'	EL	24.5	0.534	**2.07**	60'	EL	**2.45**	0.80	0.28	2.85	60'	EL	24.5	
		HL-93(Opr)	N/A	--	2.687	--	1.35	0.28	3.93	60'	EL	24.5	0.534	2.69	60'	EL	2.45	N/A	--	--	--	--	--	
		HS-20(Inv)	36.000	(2)	2.479	89.25	1.75	0.28	3.76	60'	EL	24.5	0.534	**2.48**	60'	EL	**2.45**	0.80	0.28	3.52	60'	EL	24.5	
		HS-20(Opr)	36.000	--	3.214	115.694	1.35	0.28	4.88	60'	EL	24.5	0.534	3.21	60'	EL	2.45	N/A	--	--	--	--	--	
LEGAL LOAD RATING	SV	SNSH	13.500	--	6.997	94.455	1.4	0.28	9.57	60'	EL	24.5	0.534	7	60'	EL	2.45	0.80	0.28	7.20	60'	EL	24.5	
		SNGARBS2	20.000	--	5.091	101.826	1.4	0.28	7.56	60'	EL	24.5	0.534	5.09	60'	EL	2.45	0.80	0.28	5.65	60'	EL	24.5	
		SNAGRIS2	22.000	--	4.772	104.98	1.4	0.28	7.26	60'	EL	19.6	0.534	4.77	60'	EL	2.45	0.80	0.28	5.45	60'	EL	19.6	
		SNCOTTS3	27.250	--	3.505	95.499	1.4	0.28	4.78	60'	EL	24.5	0.534	3.5	60'	EL	2.45	0.80	0.28	3.59	60'	EL	24.5	
		SNAGGRS4	34.925	--	2.991	104.445	1.4	0.28	4.15	60'	EL	24.5	0.534	2.99	60'	EL	2.45	0.80	0.28	3.12	60'	EL	24.5	
		SNS5A	35.550	--	3.044	108.209	1.4	0.28	4.05	60'	EL	24.5	0.534	3.07	60'	EL	2.45	0.80	0.28	3.04	60'	EL	24.5	
		SNS6A	39.950	--	2.84	113.453	1.4	0.28	3.79	60'	EL	24.5	0.534	2.84	60'	EL	2.45	0.80	0.28	2.85	60'	EL	24.5	
		SNS7B	42.000	--	2.712	113.918	1.4	0.28	3.61	60'	EL	24.5	0.534	2.84	60'	EL	2.45	0.80	0.28	2.71	60'	EL	24.5	
	TTST	TNAGRIT3	33.000	--	3.351	110.572	1.4	0.28	4.64	60'	EL	24.5	0.534	3.35	60'	EL	2.45	0.80	0.28	3.49	60'	EL	24.5	
		TNT4A	33.075	--	3.228	106.768	1.4	0.28	4.68	60'	EL	24.5	0.534	3.23	60'	EL	2.45	0.80	0.28	3.52	60'	EL	24.5	
		TNT6A	41.600	--	2.93	121.871	1.4	0.28	3.9	60'	EL	24.5	0.534	3.1	60'	EL	2.45	0.80	0.28	2.93	60'	EL	24.5	
		TNT7A	42.000	--	2.892	121.477	1.4	0.28	3.96	60'	EL	24.5	0.534	2.89	60'	EL	2.45	0.80	0.28	2.97	60'	EL	24.5	
		TNT7B	42.000	--	2.736	114.922	1.4	0.28	4.12	60'	EL	24.5	0.534	2.74	60'	EL	2.45	0.80	0.28	3.08	60'	EL	24.5	
		TNAGRIT4	43.000	--	2.637	113.381	1.4	0.28	3.91	60'	EL	24.5	0.534	2.64	60'	EL	2.45	0.80	0.28	2.94	60'	EL	24.5	
		TNAGT5A	45.000	--	2.676	120.405	1.4	0.28	3.66	60'	EL	24.5	0.534	2.68	60'	EL	2.45	0.80	0.28	2.75	60'	EL	24.5	
		TNAGT5B	45.000	(3)	2.502	112.57	1.4	0.28	3.58	60'	EL	24.5	0.534	**2.5**	60'	EL	**2.45**	0.80	0.28	2.69	60'	EL	24.5	

LOAD FACTORS:

DESIGN LOAD RATING FACTORS	LIMIT STATE	γ_{DC}	γ_{DW}
	STRENGTH I	1.25	1.50
	SERVICE III	1.00	1.00

NOTES:

MINIMUM RATING FACTORS ARE BASED ON THE STRENGTH I AND SERVICE III LIMIT STATES.

ALLOWABLE STRESSES FOR SERVICE III LIMIT STATE ARE AS REQUIRED FOR DESIGN.

COMMENTS:

1.
2.
3.
4.

(#) CONTROLLING LOAD RATING

(1) DESIGN LOAD RATING (HL-93)

(2) DESIGN LOAD RATING (HS-20)

(3) LEGAL LOAD RATING **

** SEE CHART FOR VEHICLE TYPE

GIRDER LOCATION

I - INTERIOR GIRDER
EL - EXTERIOR LEFT GIRDER
ER - EXTERIOR RIGHT GIRDER

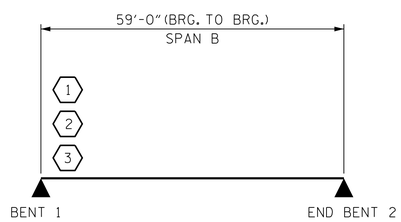

LRFR SUMMARY

FOR SPAN B

PROJECT NO. B-5709
BLADEN COUNTY
STATION: 16+25.00 -L-

DOCUMENT NOT CONSIDERED FINAL UNLESS ALL SIGNATURES COMPLETED

CDM Smith
CDM SMITH
5400 Glenwood Avenue, Suite 400
Raleigh, NC 27612-3228
NC COA No. F-1255

DRAWN BY : A.L. SAROUD DATE : 04/17
CHECKED BY : J.B. TAYLOR DATE : 04/17
DESIGN ENGINEER : J.B. TAYLOR DATE : 04/17

DWG. No.

5/17/2017
NORTH CAROLINA PROFESSIONAL SEAL 33698 ENGINEER JOSHUA B. TAYLOR
DocuSigned by: Joshua B. Taylor

STATE OF NORTH CAROLINA
DEPARTMENT OF TRANSPORTATION
RALEIGH

LRFR SUMMARY FOR 60' CORED SLAB UNIT 90° SKEW SPAN B

(NON-INTERSTATE TRAFFIC)

REVISIONS						SHEET NO.
NO.	BY:	DATE:	NO.	BY:	DATE:	S-06
1			3			TOTAL SHEETS
2			4			22

FILE: c:\pw_pll\taylorjb\d0349162\B5709_SMU_LRFR_006_080154.dgn
DATE: 5/16/2017 2:22:17 PM

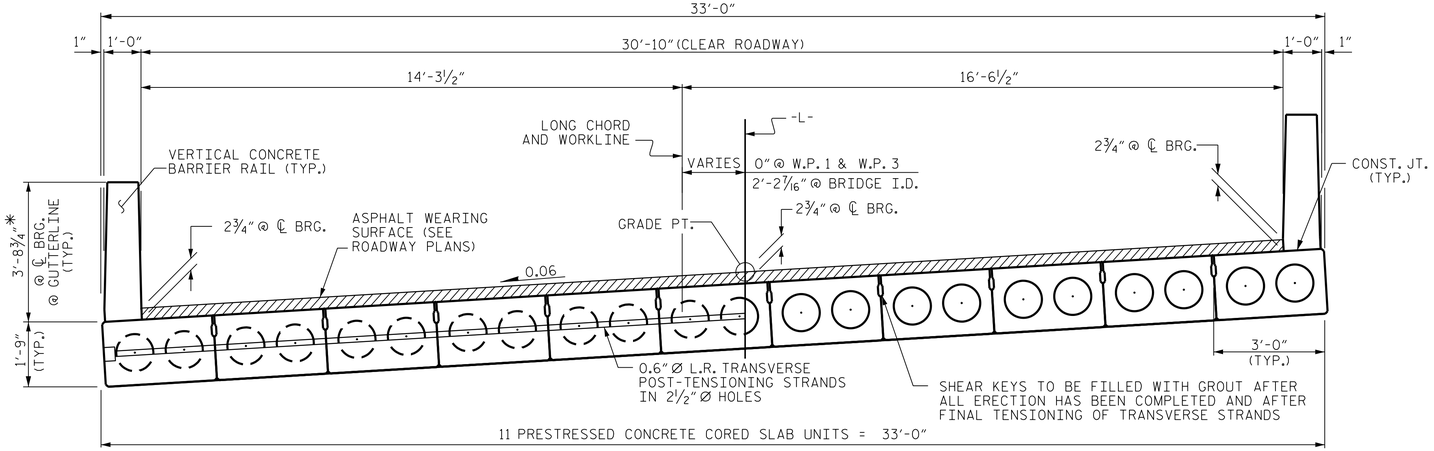

HALF SECTION
AT INTERMEDIATE DIAPHRAGMS

HALF SECTION
THROUGH VOIDS

TYPICAL SECTION

* - THE MAXIMUM BARRIER RAIL HEIGHT AND ASPHALT THICKNESS IS SHOWN. THE HEIGHT OF THE BARRIER RAIL AND ASPHALT THICKNESS VARIES WHILE THE TOP OF THE BARRIER RAIL FOLLOWS THE PROFILE OF THE GUTTERLINE. FOR RAIL HEIGHT DETAILS AND ASPHALT THICKNESS SEE THE "VERTICAL CONCRETE BARRIER RAIL SECTION" DETAIL.

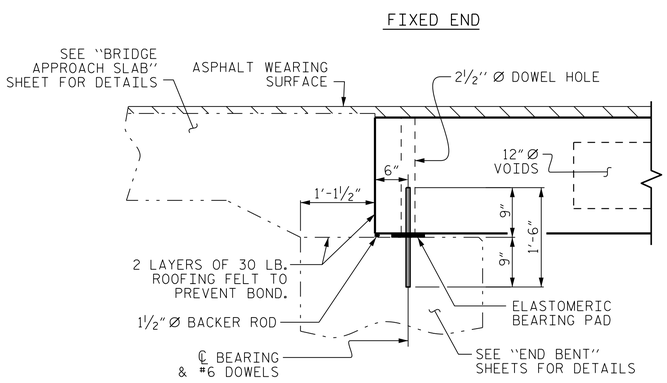

SECTION AT END BENT 1

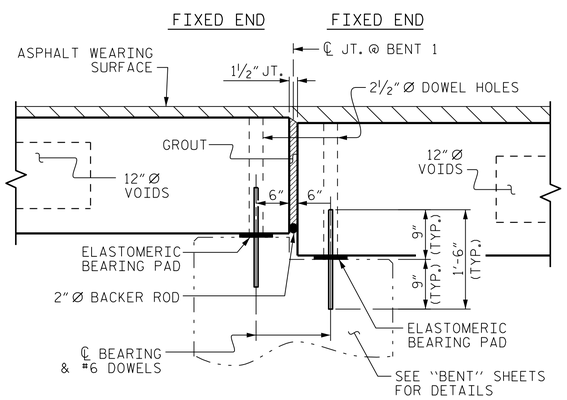

SECTION AT BENT 1

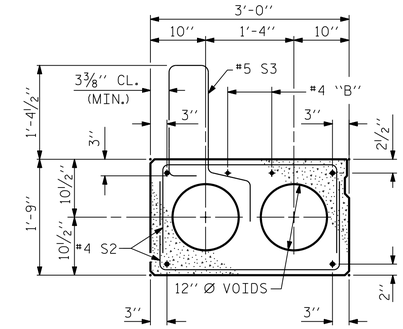

EXT. SLAB SECTION

(FOR PRESTRESSED STRAND LAYOUT, SEE INTERIOR SLAB SECTION.)

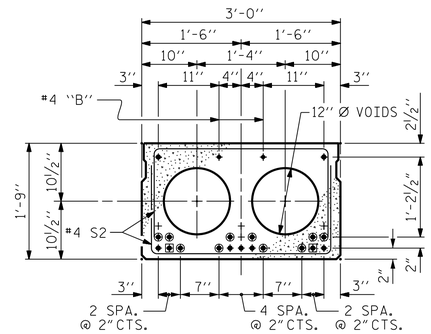

INTERIOR SLAB SECTION

(30' UNIT)
(9 STRANDS REQUIRED)

0.6" Ø LOW RELAXATION STRAND LAYOUT

◉ BOND SHALL BE BROKEN ON THESE STRANDS FOR A DISTANCE OF 2'-0" FROM END OF CORED SLAB UNIT. SEE STANDARD SPECIFICATIONS, ARTICLE 1078-7.

◉ OPTIONAL FULL LENGTH DEBONDED STRANDS. THESE STRANDS ARE NOT REQUIRED. IF THE FABRICATOR CHOOSES TO INCLUDE THESE STRANDS IN THE CORED SLAB UNIT, THE STRANDS SHALL BE DEBONDED FOR THE FULL LENGTH OF THE UNIT AT NO ADDITIONAL COST. SEE STANDARD SPECIFICATIONS, ARTICLE 1078-7.

DEBONDING LEGEND

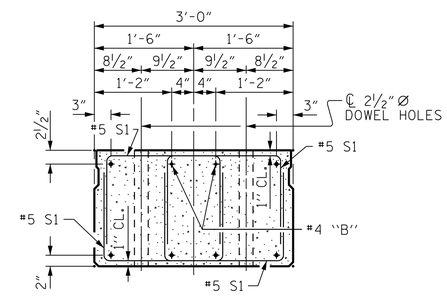

END ELEVATION

SHOWING PLACEMENT OF DOUBLE STIRRUPS AND LOCATION OF DOWEL HOLES. (STRAND LAYOUT NOT SHOWN.) INTERIOR SLAB UNIT SHOWN-EXTERIOR SLAB UNIT SIMILAR EXCEPT SHEAR KEY LOCATION.

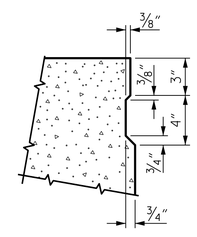

SHEAR KEY DETAIL

NOTE: OMIT SHEAR KEY ON OUTSIDE FACE OF EXTERIOR CORED SLABS.

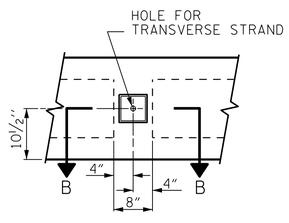

ELEVATION VIEW

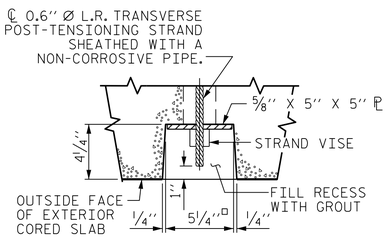

SECTION B-B

GROUTED RECESS AT END OF POST-TENSIONED STRAND OF CORED SLABS

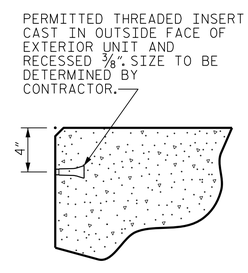

THREADED INSERT DETAIL

PROJECT NO. B-5709
BLADEN COUNTY
STATION: 16+25.00 -L-

SHEET 1 OF 6

DOCUMENT NOT CONSIDERED FINAL UNLESS ALL SIGNATURES COMPLETED

CDM Smith
CDM SMITH
5400 Glenwood Avenue, Suite 400
Raleigh, NC 27612-3228
NC COA No. F-1255

DRAWN BY : A.L. STROUD DATE : 04/17
CHECKED BY : J.B. TAYLOR DATE : 04/17
DESIGN ENGINEER : A.L. STROUD DATE : 04/17

DWG. No.

5/19/2017
NORTH CAROLINA PROFESSIONAL SEAL 33698 ENGINEER JOSHUA B. TAYLOR
DocuSigned by: Joshua B. Taylor

STATE OF NORTH CAROLINA
DEPARTMENT OF TRANSPORTATION
RALEIGH

SUBSTRUCTURE
3'-0" X 1'-9"
PRESTRESSED CONCRETE
CORED SLAB UNIT
90° SKEW
SPAN A

REVISIONS						SHEET NO.
NO.	BY:	DATE:	NO.	BY:	DATE:	S-07
1			3			TOTAL SHEETS
2			4			22

FILE: C:\pw_pj\1\stroudal\d0349162\401_013_B5709_SMU_CS_007_080154.dgn
DATE: 5/19/2017 10:42:58 AM

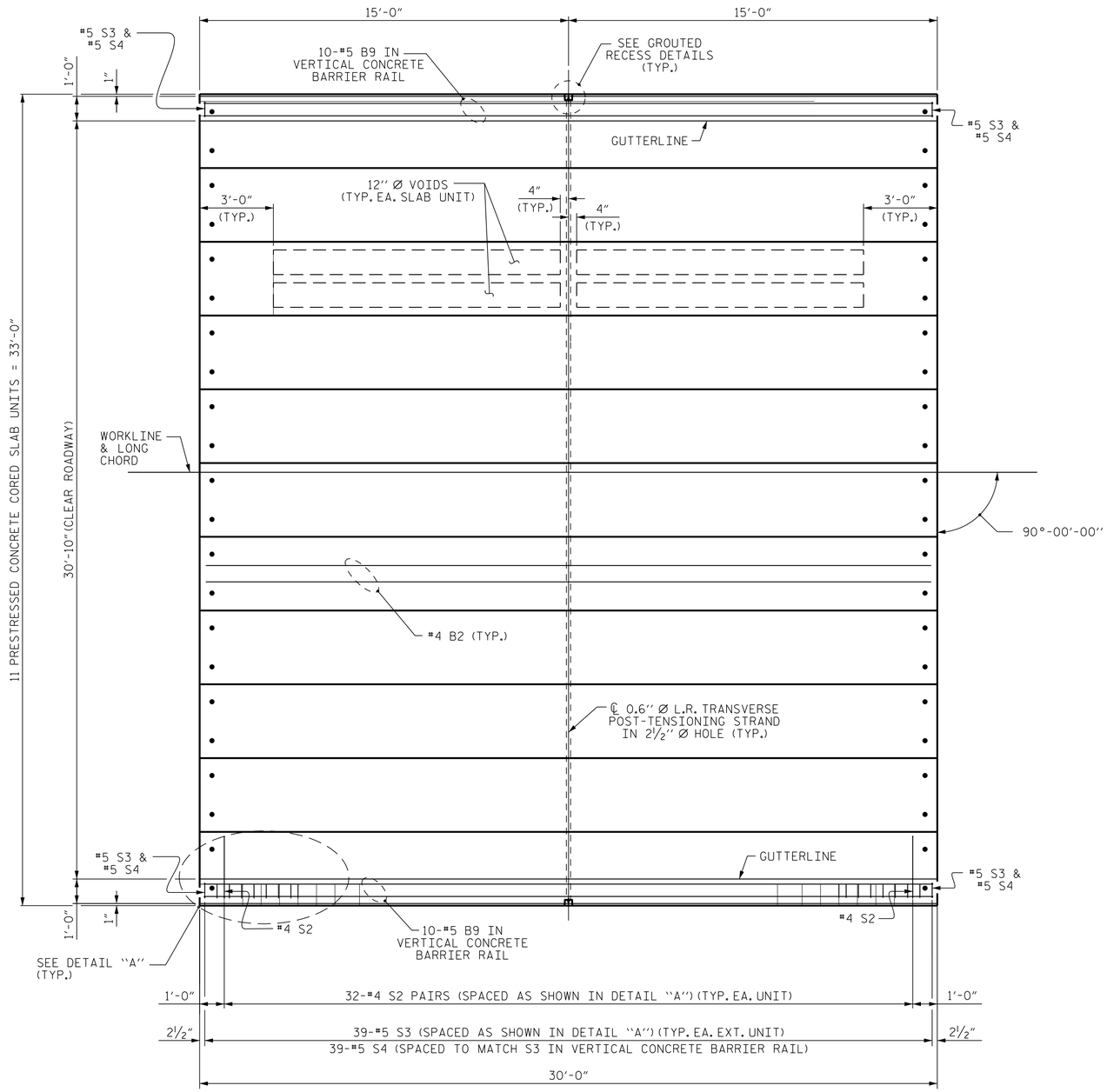

PLAN OF SPAN A

(CURVED ALIGNMENT -L- NOT SHOWN)

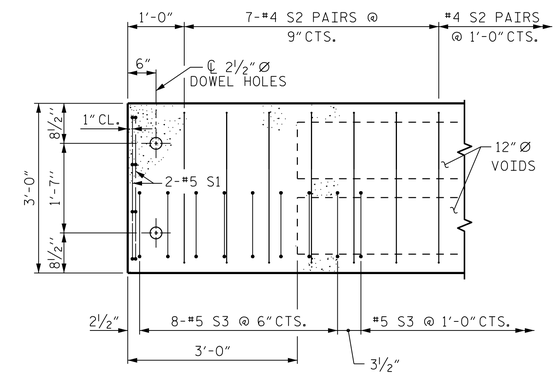

DETAIL "A"

(TYPICAL EACH END OF UNIT)
NOTE: EXTERIOR UNIT SHOWN - INTERIOR UNIT SIMILAR EXCEPT OMIT #5 S3 BARS.

PROJECT NO. B-5709
BLADEN COUNTY
STATION: 16+25.00 -L-

SHEET 2 OF 6

DOCUMENT NOT CONSIDERED FINAL UNLESS ALL SIGNATURES COMPLETED

CDM Smith
CDM SMITH
5400 Glenwood Avenue, Suite 400
Raleigh, NC 27612-3228
NC COA No. F-1255

DRAWN BY : A.L. STROUD DATE : 04/17
CHECKED BY : J.B. TAYLOR DATE : 04/17
DESIGN ENGINEER : A.L. STROUD DATE : 04/17

DWG. No.

NORTH CAROLINA PROFESSIONAL SEAL 33698 ENGINEER JOSHUA B. TAYLOR
5/19/2017
DocuSigned by: Joshua B. Taylor

STATE OF NORTH CAROLINA
DEPARTMENT OF TRANSPORTATION
RALEIGH

SUPERSTRUCTURE
3'-0" X 1'-9"
PRESTRESSED CONCRETE
CORED SLAB UNIT
90° SKEW
SPAN A

REVISIONS						SHEET NO.
NO.	BY:	DATE:	NO.	BY:	DATE:	S-08
1			3			TOTAL SHEETS
2			4			22

FILE: c:\pw_pll\snoudel\d034192\d01_015_B5709_SMU_CS_008_080154.dgn
DATE: 5/19/2017 10:43:44 AM

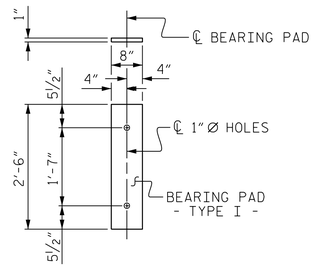

FIXED END
(TYPE I - 22 REQ'D)

ELASTOMERIC BEARING DETAILS

ELASTOMER IN ALL BEARINGS SHALL BE 60 DUROMETER HARDNESS.

BILL OF MATERIAL FOR VERTICAL CONCRETE BARRIER RAIL

BAR	BARS PER PAIR OF EXTERIOR UNITS 30' UNIT	TOTAL NO.	SIZE	TYPE	LENGTH	WEIGHT
✻ B9	20	1	#5	STR	29'-7"	617
✻ S4	78	1	#5	2	7'-2"	583
✻ EPOXY COATED REINFORCING STEEL				LBS.		1200
CLASS AA CONCRETE				CU.YDS.		7.7
TOTAL VERTICAL CONCRETE BARRIER RAIL				LN. FT.		60.25

GRADE 270 STRANDS

	0.6" Ø L.R.
AREA (SQUARE INCHES)	0.217
ULTIMATE STRENGTH (LBS. PER STRAND)	58,600
APPLIED PRESTRESS (LBS. PER STRAND)	43,950

DEAD LOAD DEFLECTION AND CAMBER

3'-0" x 1'-9"	
30' CORED SLAB UNIT	0.6" Ø L.R. STRAND
CAMBER (SLAB ALONE IN PLACE)	¼" ↑
DEFLECTION DUE TO SUPERIMPOSED DEAD LOAD ✻✻	⅛" ↓
FINAL CAMBER	⅛" ↑

✻✻ INCLUDES FUTURE WEARING SURFACE

BAR TYPES

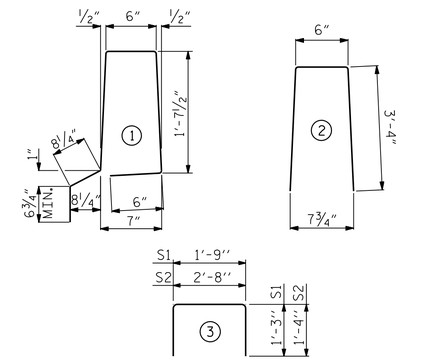

ALL BAR DIMENSIONS ARE OUT TO OUT

BILL OF MATERIAL FOR ONE 30' CORED SLAB UNIT

BAR	NUMBER	SIZE	TYPE	EXTERIOR UNIT LENGTH	EXTERIOR UNIT WEIGHT	INTERIOR UNIT LENGTH	INTERIOR UNIT WEIGHT
B2	2	#4	STR	29'-8"	40	29'-8"	40
S1	8	#5	3	4'-3"	35	4'-3"	35
S2	64	#4	3	5'-4"	228	5'-4"	228
✻ S3	39	#5	1	5'-6"	224		
REINFORCING STEEL			LBS.		303		303
✻ EPOXY COATED REINFORCING STEEL			LBS.		224		
5000 P.S.I. CONCRETE			CU. YDS.		4.4		4.4
0.6" Ø L.R. STRANDS			No.		9		9

GUTTERLINE ASPHALT THICKNESS & RAIL HEIGHT

	ASPHALT OVERLAY THICKNESS @ MID-SPAN	RAIL HEIGHT @ MID-SPAN
30' UNITS	2⅝"	3'-8⅝"

CORED SLABS REQUIRED

	NUMBER	LENGTH	TOTAL LENGTH
30' UNIT			
EXTERIOR C.S.	2	30'-0"	60.0'
INTERIOR C.S.	9	30'-0"	270.0'
TOTAL	11	30'-0"	330.0'

CONCRETE RELEASE STRENGTH

UNIT	PSI
30' UNIT	4000

FOR END OF VERTICAL CONCRETE BARRIER RAIL DETAILS, SEE SHEET S-12.

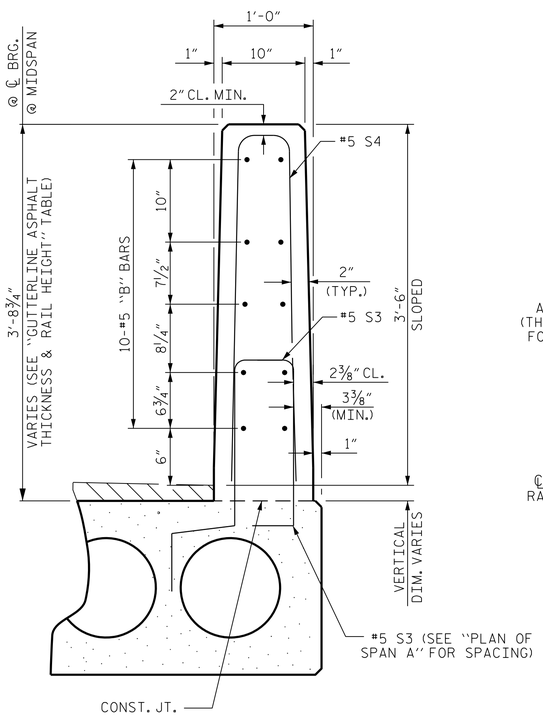

VERTICAL CONCRETE BARRIER RAIL SECTION

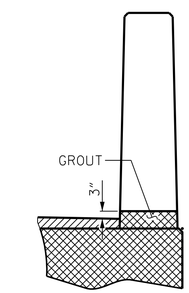

SECTION T-T
AT OPEN JOINT AT BENT
(THIS IS TO BE USED WHERE FOAM JOINT IS NOT USED)

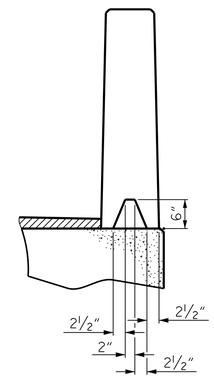

SECTION S-S
AT DAM IN OPEN JOINT
(THIS IS TO BE USED ONLY WHEN SLIP FORM IS USED)

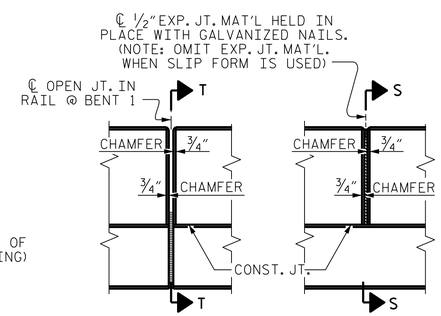

ELEVATION AT EXPANSION JOINTS

NOTES

ALL PRESTRESSING STRANDS SHALL BE 7-WIRE LOW RELAXATION GRADE 270 STRANDS AND SHALL CONFORM TO AASHTO M203 EXCEPT FOR SAMPLING REQUIREMENTS WHICH SHALL BE IN ACCORDANCE WITH THE STANDARD SPECIFICATIONS.

ALL REINFORCING STEEL CAST WITH THE CORED SLAB SECTIONS SHALL BE GRADE 60 AND SHALL BE INCLUDED IN THE UNIT PRICE BID FOR PRESTRESSED CONCRETE CORED SLABS.

RECESSES FOR TRANSVERSE STRANDS SHALL BE GROUTED AFTER THE TENSIONING OF THE STRANDS.

THE 2½" Ø DOWEL HOLES AT FIXED ENDS OF SLAB SECTIONS SHALL BE FILLED WITH NON-SHRINK GROUT.

THE BACKER RODS SHALL CONFORM TO THE REQUIREMENTS OF TYPE M BOND BREAKER. SEE SECTION 1028 OF THE STANDARD SPECIFICATIONS.

WHEN CORED SLABS ARE CAST, AN INTERNAL HOLD-DOWN SYSTEM SHALL BE EMPLOYED TO PREVENT VOIDS FROM RISING OR MOVING SIDEWAYS. AT LEAST SIX WEEKS PRIOR TO CASTING CORED SLABS, THE CONTRACTOR SHALL SUBMIT TO THE ENGINEER FOR REVIEW AND COMMENT, DETAILED DRAWINGS OF THE PROPOSED HOLD-DOWN SYSTEM. IN ADDITION TO STRUCTURAL DETAILS, LOCATION AND SPACING OF THE HOLD-DOWNS SHALL BE INDICATED.

ALL REINFORCING STEEL IN THE VERTICAL CONCRETE BARRIER RAIL SHALL BE EPOXY COATED.

PRESTRESSING STRANDS SHALL BE CUT FLUSH WITH THE CORED SLAB UNIT ENDS.

APPLY EPOXY PROTECTIVE COATING TO CORED SLAB UNIT ENDS.

GROOVED CONTRACTION JOINTS, ½" IN DEPTH, SHALL BE TOOLED IN ALL EXPOSED FACES OF THE BARRIER RAIL AND IN ACCORDANCE WITH ARTICLE 825-10(B) OF THE STANDARD SPECIFICATIONS. A CONTRACTION JOINT SHALL BE LOCATED AT EACH THIRD POINT BETWEEN BARRIER RAIL EXPANSION JOINTS. ONLY ONE CONTRACTION JOINT IS REQUIRED AT MIDPOINT OF BARRIER RAIL SEGMENTS LESS THAN 20 FEET IN LENGTH AND NO CONTRACTION JOINTS ARE REQUIRED FOR THOSE SEGMENTS LESS THAN 10 FEET IN LENGTH.

FLAME CUTTING OF THE TRANSVERSE POST-TENSIONING STRAND IS NOT ALLOWED.

THE TRANSFER OF LOAD FROM THE ANCHORAGES TO THE CORED SLAB UNIT SHALL BE DONE WHEN THE CONCRETE HAS REACHED A COMPRESSIVE STRENGTH OF NOT LESS THAN THE REQUIRED STRENGTH SHOWN IN THE "CONCRETE RELEASE STRENGTH" TABLE.

FOR GROUT FOR STRUCTURES, SEE SPECIAL PROVISIONS.

THE PERMITTED THREADED INSERTS ARE DETAILED AS AN OPTION FOR THE CONTRACTOR TO ATTACH FALSEWORK AND FORMWORK DURING CONSTRUCTION.

THE PERMITTED THREADED INSERTS IN THE EXTERIOR UNITS SHALL BE SIZED BY THE CONTRACTOR, SPACED AT 4'-0" CENTERS AND GALVANIZED IN ACCORDANCE WITH SECTION 1076 OF THE STANDARD SPECIFICATIONS. STAINLESS STEEL THREADED INSERTS MAY BE USED AS AN ALTERNATE.

THE PERMITTED THREADED INSERTS SHALL BE GROUTED BY THE CONTRACTOR IMMEDIATELY FOLLOWING REMOVAL OF THE FALSEWORK.

THE COST OF THE PERMITTED THREADED INSERTS SHALL BE INCLUDED IN THE PRICE BID FOR THE PRECAST UNITS.

PROJECT NO. B-5709
BLADEN COUNTY
STATION: 16+25.00 -L-

SHEET 3 OF 6

STATE OF NORTH CAROLINA
DEPARTMENT OF TRANSPORTATION
RALEIGH

SUPERSTRUCTURE
3'-0" X 1'-9"
PRESTRESSED CONCRETE
CORED SLAB UNIT
90° SKEW
SPAN A

CDM Smith
CDM SMITH
5400 Glenwood Avenue, Suite 400
Raleigh, NC 27612-3228
NC COA No. F-1255

DRAWN BY : A.L. STROUD DATE : 04/17
CHECKED BY : J.B. TAYLOR DATE : 04/17
DESIGN ENGINEER : J.B. TAYLOR DATE : 04/17

DWG. No.

NORTH CAROLINA PROFESSIONAL SEAL 33698 ENGINEER JOSHUA B. TAYLOR
5/17/2017
DocuSigned by: Joshua B. Taylor

REVISIONS						SHEET NO.
NO.	BY:	DATE:	NO.	BY:	DATE:	S-09
1			3			TOTAL SHEETS
2			4			22

FILE: c:\pw_pll\taylorjb\d0349162\B5709_SMU_CS_009_080154.dgn
DATE: 5/16/2017 2:24:03 PM

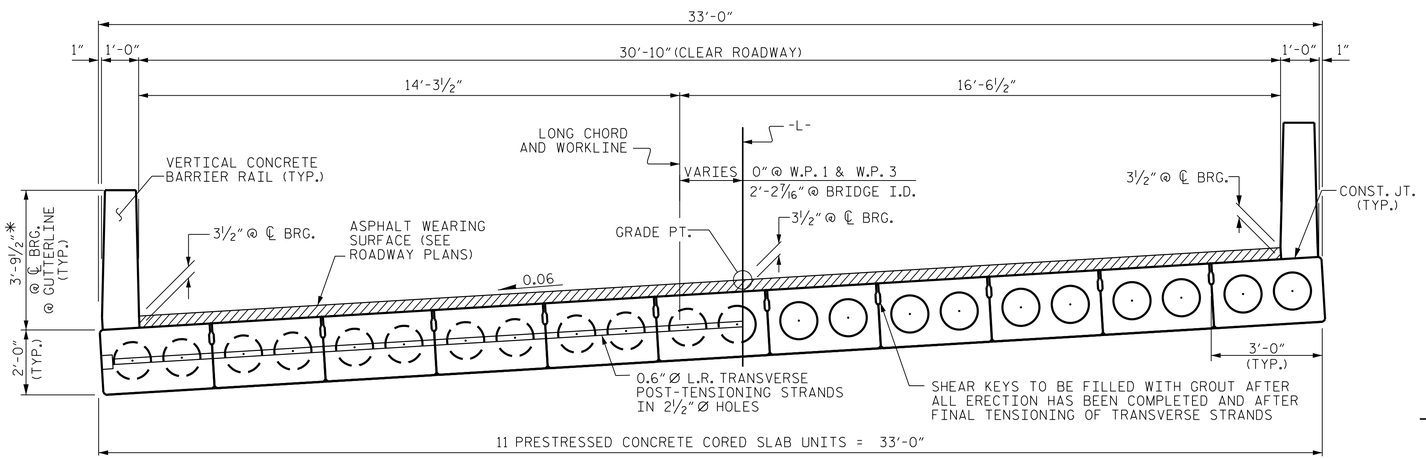

HALF SECTION
AT INTERMEDIATE DIAPHRAGMS

HALF SECTION
THROUGH VOIDS

TYPICAL SECTION

* - THE MAXIMUM BARRIER RAIL HEIGHT AND ASPHALT THICKNESS IS SHOWN. THE HEIGHT OF THE BARRIER RAIL AND ASPHALT THICKNESS VARIES WHILE THE TOP OF THE BARRIER RAIL FOLLOWS THE PROFILE OF THE GUTTERLINE. FOR RAIL HEIGHT DETAILS AND ASPHALT THICKNESS SEE THE "VERTICAL CONCRETE BARRIER RAIL SECTION" DETAIL.

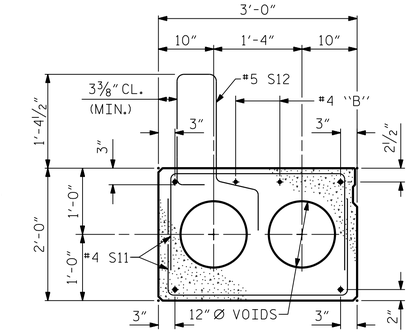

EXTERIOR SLAB SECTION

(FOR PRESTRESSED STRAND LAYOUT, SEE INTERIOR SLAB SECTION.)

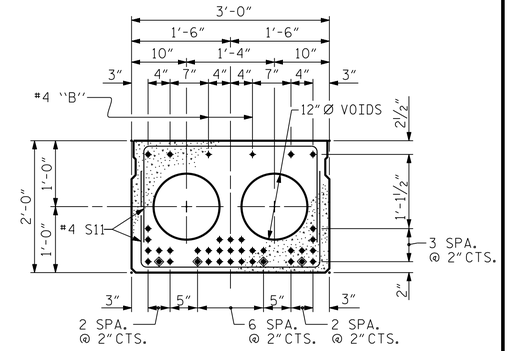

INTERIOR SLAB SECTION

(37 STRANDS REQUIRED)

0.6" Ø LOW RELAXATION STRAND LAYOUT

◈ BOND SHALL BE BROKEN ON THESE STRANDS FOR A DISTANCE OF 12'-0" FROM END OF CORED SLAB UNIT. SEE STANDARD SPECIFICATIONS, ARTICLE 1078-7.

◉ OPTIONAL FULL LENGTH DEBONDED STRANDS. THESE STRANDS ARE NOT REQUIRED. IF THE FABRICATOR CHOOSES TO INCLUDE THESE STRANDS IN THE CORED SLAB UNIT, THE STRANDS SHALL BE DEBONDED FOR THE FULL LENGTH OF THE UNIT AT NO ADDITIONAL COST. SEE STANDARD SPECIFICATIONS, ARTICLE 1078-7.

DEBONDING LEGEND

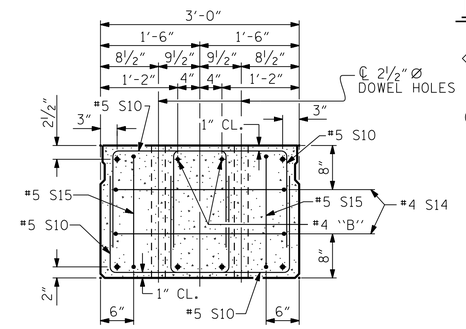

END ELEVATION

SHOWING PLACEMENT OF DOUBLE STIRRUPS AND LOCATION OF DOWEL HOLES. (STRAND LAYOUT NOT SHOWN.) INTERIOR SLAB UNIT SHOWN-EXTERIOR SLAB UNIT SIMILAR EXCEPT SHEAR KEY LOCATION.

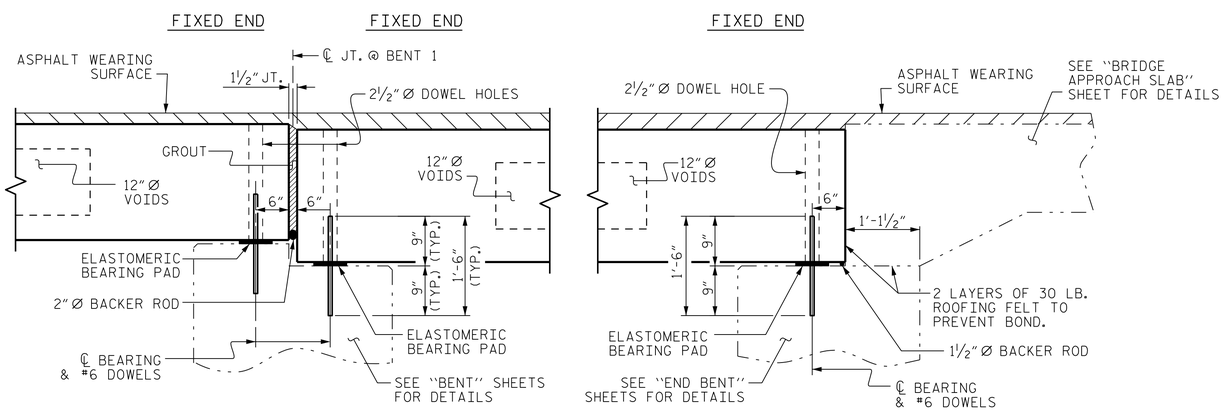

SECTION AT BENT 1

SECTION AT END BENT 2

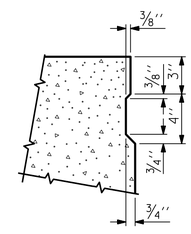

SHEAR KEY DETAIL

NOTE: OMIT SHEAR KEY ON OUTSIDE FACE OF EXTERIOR CORED SLABS.

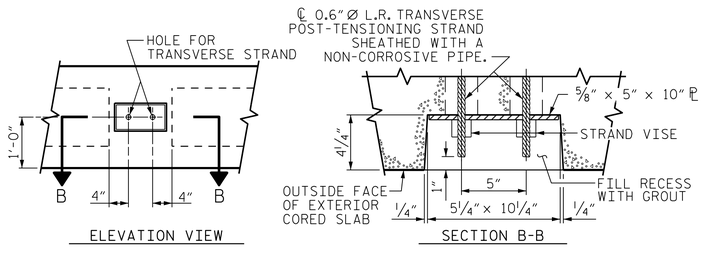

GROUTED RECESS AT END OF POST-TENSIONED STRAND-CORED SLABS

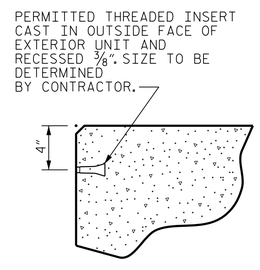

THREADED INSERT DETAIL

PROJECT NO. B-5709
BLADEN COUNTY
STATION: 16+25.00 -L-

SHEET 4 OF 6

STATE OF NORTH CAROLINA
DEPARTMENT OF TRANSPORTATION
RALEIGH
SUPERSTRUCTURE
3'-0" X 2'-0"
PRESTRESSED CONCRETE
CORED SLAB UNIT
90° SKEW
SPAN B

DOCUMENT NOT CONSIDERED FINAL UNLESS ALL SIGNATURES COMPLETED

CDM Smith
CDM SMITH
5400 Glenwood Avenue, Suite 400
Raleigh, NC 27612-3228
NC COA No. F-1255

DRAWN BY : A.L. STROUD DATE : 04/17
CHECKED BY : J.B. TAYLOR DATE : 04/17
DESIGN ENGINEER : A.L. STROUD DATE : 04/17

DWG. No.

5/19/2017
NORTH CAROLINA PROFESSIONAL SEAL 33698 ENGINEER JOSHUA B. TAYLOR
DocuSigned by: Joshua B. Taylor

REVISIONS						SHEET NO.
NO.	BY:	DATE:	NO.	BY:	DATE:	S-10
1			3			TOTAL SHEETS
2			4			22

FILE: c:\pw_pll\stroudal\d0349162\401_019_B5709_SMU_CS_010_080134.dgn
DATE: 5/19/2017 10:45:10 AM

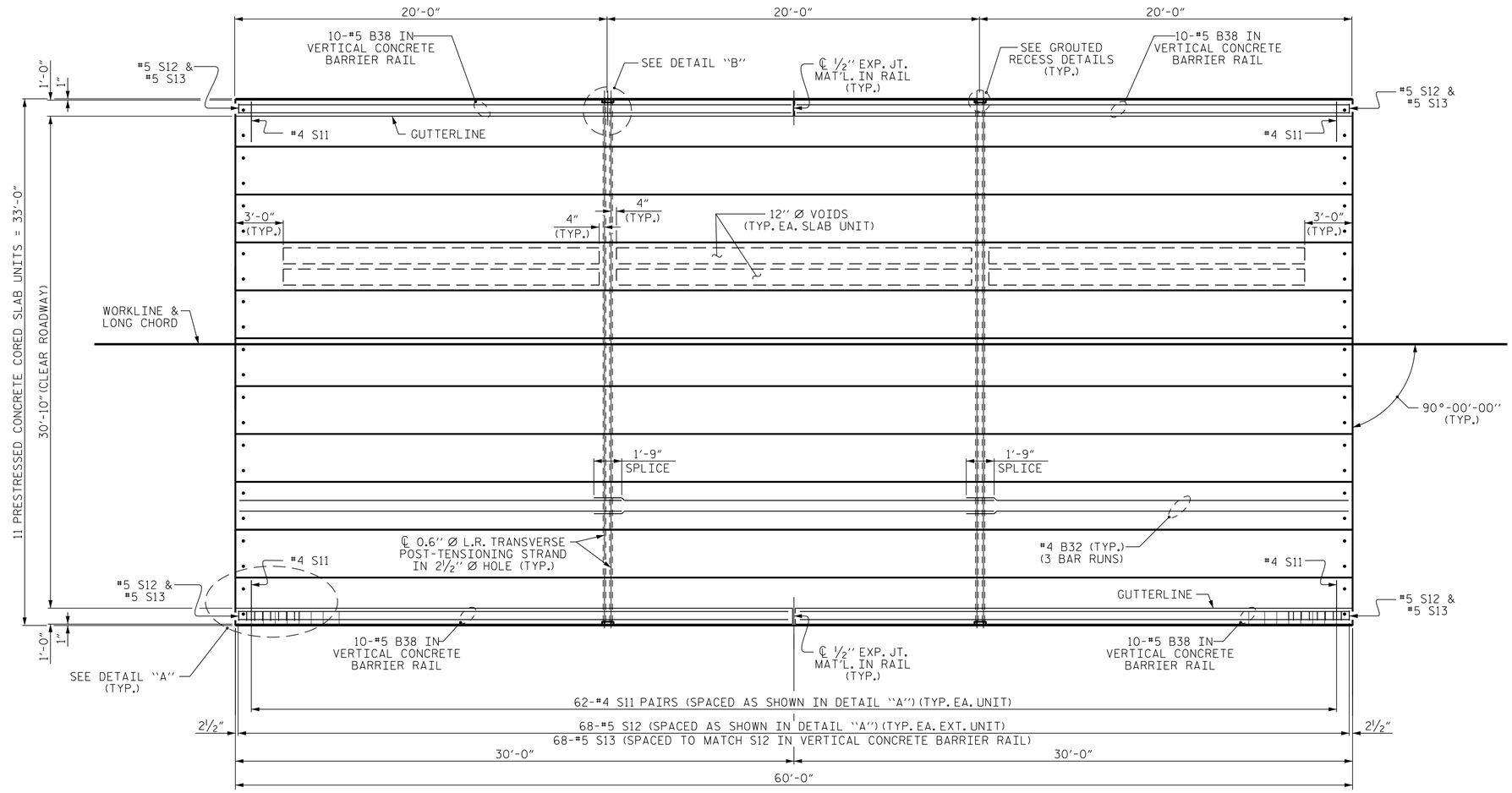

PLAN OF SPAN B

(CURVED ALIGNMENT -L- NOT SHOWN)

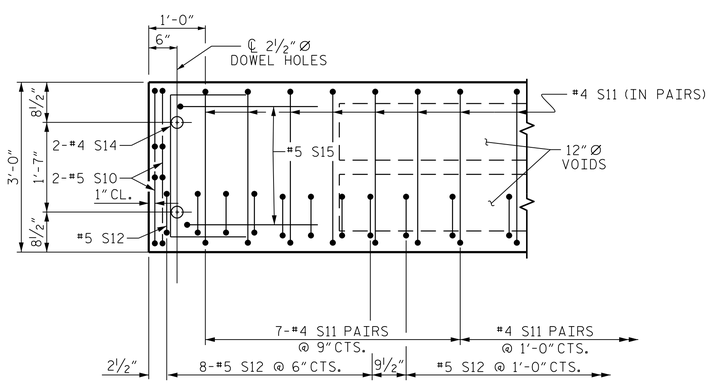

DETAIL "A"

(TYPICAL EACH END OF UNIT)
NOTE: EXTERIOR UNIT SHOWN - INTERIOR UNIT SIMILAR EXCEPT OMIT #5 S12 BARS.

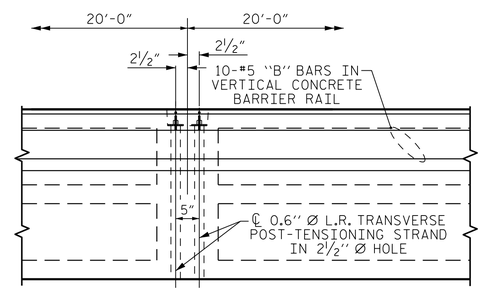

DETAIL "B"

#4 S11 BARS MAY BE SHIFTED AS NECESSARY TO MAINTAIN 1" CLEAR TO GROUTED RECESS AND 2 1/2" Ø TRANSVERSE POST-TENSIONING STRAND HOLES

PROJECT NO. B-5709
BLADEN COUNTY
STATION: 16+25.00 -L-

SHEET 5 OF 6

STATE OF NORTH CAROLINA
DEPARTMENT OF TRANSPORTATION
RALEIGH

SUPERSTRUCTURE
3'-0" x 2'-0"
PRESTRESSED CONCRETE
CORED SLAB UNIT
90° SKEW
SPAN B

DOCUMENT NOT CONSIDERED FINAL UNLESS ALL SIGNATURES COMPLETED

CDM Smith
CDM SMITH
5400 Glenwood Avenue, Suite 400
Raleigh, NC 27612-3228
NC COA No. F-1255

DRAWN BY : A.L. STROUD DATE : 04/17
CHECKED BY : J.B. TAYLOR DATE : 04/17
DESIGN ENGINEER : A.L. STROUD DATE : 04/17

DWG. No.

NORTH CAROLINA PROFESSIONAL SEAL 33698 ENGINEER JOSHUA B. TAYLOR
5/19/2017
DocuSigned by: Joshua B. Taylor

REVISIONS						SHEET NO.
NO.	BY:	DATE:	NO.	BY:	DATE:	S-11
1			3			TOTAL SHEETS
2			4			22

FILE: c:\pw_pll\stroudal\d0349163\401_021_B5709_SMU_CS_011_080154.dgn
DATE: 5/19/2017 10:43:53 AM

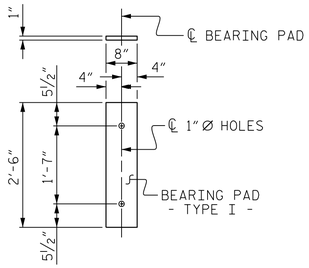

FIXED END
(TYPE I - 22 REQ'D)

ELASTOMERIC BEARING DETAILS

ELASTOMER IN ALL BEARINGS SHALL BE 60 DUROMETER HARDNESS.

BILL OF MATERIAL FOR ONE 60' CORED SLAB UNIT

				EXTERIOR UNIT		INTERIOR UNIT	
BAR	NUMBER	SIZE	TYPE	LENGTH	WEIGHT	LENGTH	WEIGHT
B32	6	#4	STR	21'-2"	85	21'-2"	85
S10	8	#5	3	4'-9"	40	4'-9"	40
S11	124	#4	3	5'-10"	483	5'-10"	483
✻S12	68	#5	1	5'-6"	390		
S14	4	#4	3	5'-7"	15	5'-7"	15
S15	4	#5	3	7'-1"	30	7'-1"	30
REINFORCING STEEL			LBS.		653		653
✻EPOXY COATED REINFORCING STEEL			LBS.		390		
9500 P.S.I. CONCRETE			CU. YDS.		10.3		10.3
0.6" Ø L.R. STRANDS			No.		37		37

CONCRETE RELEASE STRENGTH

UNIT	PSI
60' UNIT	7200

BAR TYPES

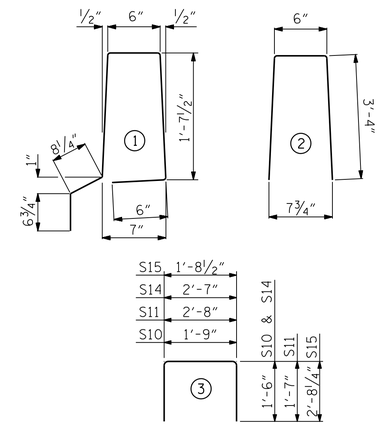

ALL BAR DIMENSIONS ARE OUT TO OUT

NOTES

ALL PRESTRESSING STRANDS SHALL BE 7-WIRE LOW RELAXATION GRADE 270 STRANDS AND SHALL CONFORM TO AASHTO M203 EXCEPT FOR SAMPLING REQUIREMENTS WHICH SHALL BE IN ACCORDANCE WITH THE STANDARD SPECIFICATIONS.

ALL REINFORCING STEEL CAST WITH THE CORED SLAB SECTIONS SHALL BE GRADE 60 AND SHALL BE INCLUDED IN THE UNIT PRICE BID FOR PRESTRESSED CONCRETE CORED SLABS.

RECESSES FOR TRANSVERSE STRANDS SHALL BE GROUTED AFTER THE TENSIONING OF THE STRANDS.

THE 2½" Ø DOWEL HOLES AT FIXED ENDS OF SLAB SECTIONS SHALL BE FILLED WITH NON-SHRINK GROUT.

THE BACKER RODS SHALL CONFORM TO THE REQUIREMENTS OF TYPE M BOND BREAKER. SEE SECTION 1028 OF THE STANDARD SPECIFICATIONS.

WHEN CORED SLABS ARE CAST, AN INTERNAL HOLD-DOWN SYSTEM SHALL BE EMPLOYED TO PREVENT VOIDS FROM RISING OR MOVING SIDEWAYS. AT LEAST SIX WEEKS PRIOR TO CASTING CORED SLABS, THE CONTRACTOR SHALL SUBMIT TO THE ENGINEER FOR REVIEW AND COMMENT, DETAILED DRAWINGS OF THE PROPOSED HOLD-DOWN SYSTEM. IN ADDITION TO STRUCTURAL DETAILS, LOCATION AND SPACING OF THE HOLD-DOWNS SHALL BE INDICATED.

THE TRANSFER OF LOAD FROM THE ANCHORAGES TO THE CORED SLAB UNIT SHALL BE DONE WHEN THE CONCRETE HAS REACHED A COMPRESSIVE STRENGTH OF NOT LESS THAN THE REQUIRED STRENGTH SHOWN IN THE "CONCRETE RELEASE STRENGTH" TABLE.

ALL REINFORCING STEEL IN VERTICAL CONCRETE BARRIER RAILS SHALL BE EPOXY COATED.

PRESTRESSING STRANDS SHALL BE CUT FLUSH WITH THE CORED SLAB UNIT ENDS.

APPLY EPOXY PROTECTIVE COATING TO CORED SLAB UNIT ENDS.

GROOVED CONTRACTION JOINTS, ½" IN DEPTH, SHALL BE TOOLED IN ALL EXPOSED FACES OF THE BARRIER RAIL AND IN ACCORDANCE WITH ARTICLE 825-10(B) OF THE STANDARD SPECIFICATIONS. A CONTRACTION JOINT SHALL BE LOCATED AT EACH THIRD POINT BETWEEN BARRIER RAIL EXPANSION JOINTS. ONLY ONE CONTRACTION JOINT IS REQUIRED AT MIDPOINT OF BARRIER RAIL SEGMENTS LESS THAN 20 FEET IN LENGTH AND NO CONTRACTION JOINTS ARE REQUIRED FOR THOSE SEGMENTS LESS THAN 10 FEET IN LENGTH.

FLAME CUTTING OF THE TRANSVERSE POST-TENSIONING STRAND IS NOT ALLOWED.

MAINTAIN A SYMMETRIC TENSION FORCE BETWEEN EACH PAIR OF TRANSVERSE POST TENSIONING STRANDS IN THE DIAPHRAGM.

THE #4 S11 STIRRUPS MAY BE SHIFTED AS NECESSARY TO MAINTAIN 1" CLEAR TO THE GROUTED RECESS.

FOR GROUT FOR STRUCTURES, SEE SPECIAL PROVISIONS.

THE PERMITTED THREADED INSERTS ARE DETAILED AS AN OPTION FOR THE CONTRACTOR TO ATTACH FALSEWORK AND FORMWORK DURING CONSTRUCTION.

THE PERMITTED THREADED INSERTS IN THE EXTERIOR UNITS SHALL BE SIZED BY THE CONTRACTOR, SPACED AT 4'-0" CENTERS AND GALVANIZED IN ACCORDANCE WITH SECTION 1076 OF THE STANDARD SPECIFICATIONS. STAINLESS STEEL THREADED INSERTS MAY BE USED AS AN ALTERNATE.

THE PERMITTED THREADED INSERTS SHALL BE GROUTED BY THE CONTRACTOR IMMEDIATELY FOLLOWING REMOVAL OF THE FALSEWORK.

THE COST OF THE PERMITTED THREADED INSERTS SHALL BE INCLUDED IN THE PRICE BID FOR THE PRECAST UNITS.

CORED SLABS REQUIRED

	NUMBER	LENGTH	TOTAL LENGTH
60' UNIT			
EXTERIOR C.S.	2	60'-0"	120.0'
INTERIOR C.S.	9	60'-0"	540.0'
TOTAL	11	60'-0"	660.0'

BILL OF MATERIAL FOR VERTICAL CONCRETE BARRIER RAIL

BAR	BARS PER PAIR OF EXTERIOR UNITS	TOTAL NO.	SIZE	TYPE	LENGTH	WEIGHT
	60' UNIT					
✻B38	40		#5	STR	29'-7"	1234
✻S13	136		#5	2	7'-2"	1017
✻EPOXY COATED REINFORCING STEEL				LBS.		2251
CLASS AA CONCRETE				CU.YDS.		15.6
TOTAL VERTICAL CONCRETE BARRIER RAIL				LN.FT.		120.25

DEAD LOAD DEFLECTION AND CAMBER

3'-0" x 2'-0"	
60' CORED SLAB UNIT	0.6" Ø L.R. STRAND
CAMBER (SLAB ALONE IN PLACE)	2¼" ↑
DEFLECTION DUE TO SUPERIMPOSED DEAD LOAD✻✻	⅜" ↓
FINAL CAMBER	1⅞" ↑

✻✻ INCLUDES FUTURE WEARING SURFACE

GRADE 270 STRANDS

	0.6" Ø L.R.
AREA (SQUARE INCHES)	0.217
ULTIMATE STRENGTH (LBS. PER STRAND)	58,600
APPLIED PRESTRESS (LBS. PER STRAND)	43,950

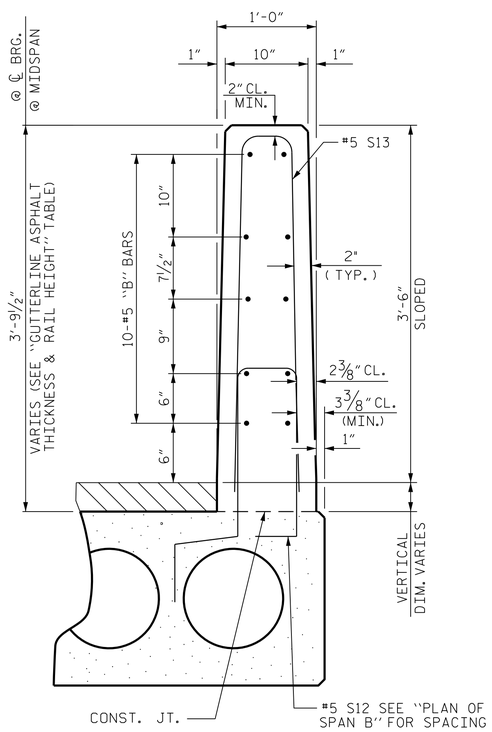

SECTION THRU RAIL

VERTICAL CONCRETE BARRIER RAIL DETAILS

FOR EXPANSION JOINTS DETAILS, SEE SHEET S-09

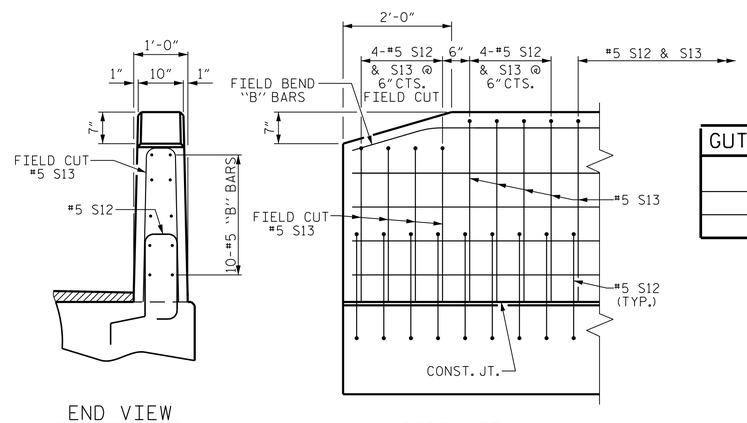

END VIEW

SIDE VIEW

END OF RAIL DETAILS

END BENT 2 SHOWN, END BENT 1 SIMILAR.

GUTTERLINE ASPHALT THICKNESS & RAIL HEIGHT

	ASPHALT OVERLAY THICKNESS @ MID-SPAN	RAIL HEIGHT @ MID-SPAN
60' UNITS	1⅝"	3'-7⅝"

PROJECT NO. B-5709
BLADEN COUNTY
STATION: 16+25.00 -L-

SHEET 6 OF 6

STATE OF NORTH CAROLINA
DEPARTMENT OF TRANSPORTATION
RALEIGH

SUPERSTRUCTURE
3'-0" X 2'-0"
PRESTRESSED CONCRETE
CORED SLAB UNIT
90° SKEW
SPAN B

CDM Smith
CDM SMITH
5400 Glenwood Avenue, Suite 400
Raleigh, NC 27612-3228
NC COA No. F-1255

DRAWN BY : A.L. SARGENT DATE : 04/17
CHECKED BY : J.B. TAYLOR DATE : 04/17
DESIGN ENGINEER : J.B. TAYLOR DATE : 04/17

DWG. No.

NORTH CAROLINA PROFESSIONAL SEAL 33698 ENGINEER JOSHUA B. TAYLOR
5/17/2017
DocuSigned by: Joshua B. Taylor

REVISIONS								SHEET NO.
NO.	BY:	DATE:	NO.	BY:	DATE:			S-12
1			3					TOTAL SHEETS
2			4					22

FILE: c:\pw_pll\taylorjb\d0349162\B5709_SMU_CS_012_080354.dgn
DATE: 5/16/2017 2:25:51 PM

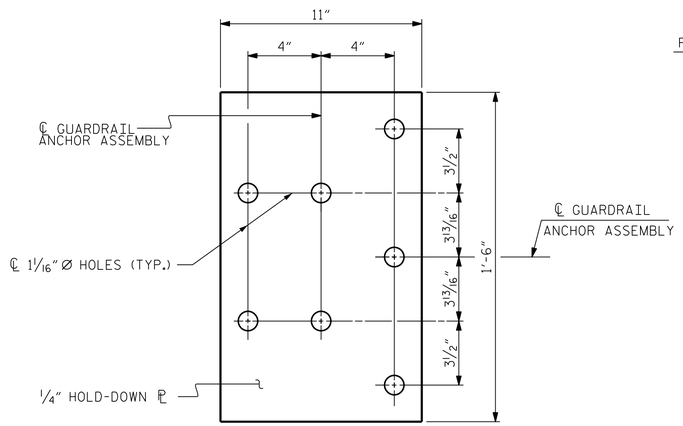

PLAN

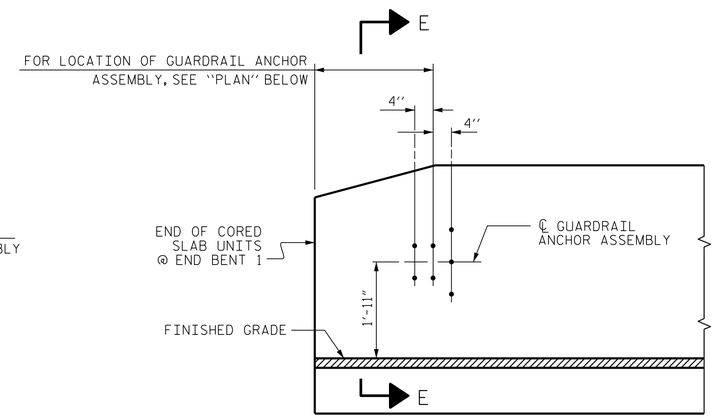

ELEVATION

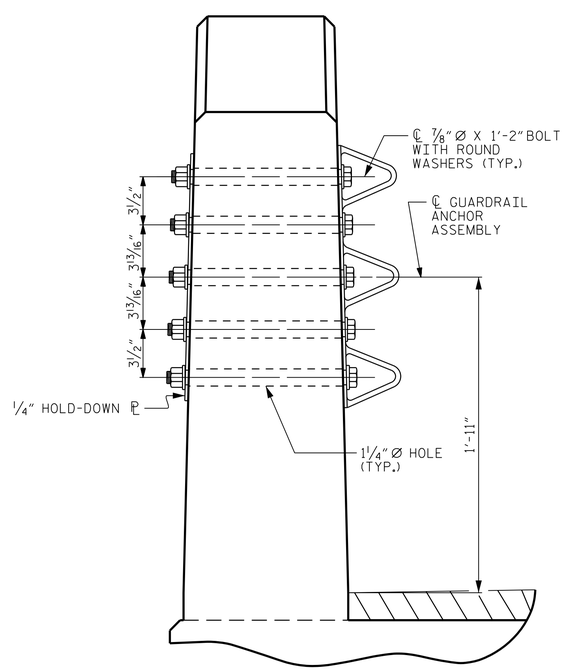

SECTION E-E

GUARDRAIL ANCHOR ASSEMBLY DETAILS

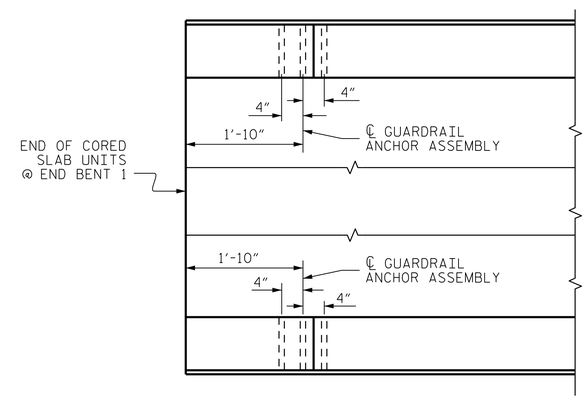

PLAN

LOCATION OF ANCHORS FOR GUARDRAIL

END BENT 1 SHOWN, END BENT 2 SIMILAR.

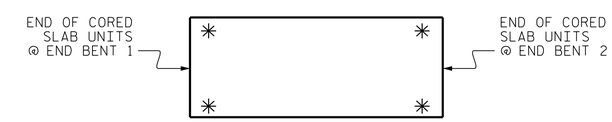

SKETCH SHOWING POINTS OF ATTACHMENT

✳ DENOTES GUARDRAIL ANCHOR ASSEMBLY

NOTES

THE GUARDRAIL ANCHOR ASSEMBLY SHALL CONSIST OF A 1/4" HOLD DOWN PLATE AND 7 - 7/8" Ø BOLTS WITH NUTS AND WASHERS.

THE HOLD-DOWN PLATE SHALL CONFORM TO AASHTO M270 GRADE 36. AFTER FABRICATION, THE HOLD-DOWN PLATE SHALL BE HOT-DIP GALVANIZED IN ACCORDANCE WITH AASHTO M111.

BOLTS SHALL CONFORM TO THE REQUIREMENTS OF ASTM A307 AND NUTS SHALL CONFORM TO THE REQUIREMENTS OF AASHTO M291. BOLTS, NUTS AND WASHERS SHALL BE GALVANIZED. (AT THE CONTRACTOR'S OPTION, STAINLESS STEEL BOLTS, NUTS AND WASHERS MAY BE USED AS AN ALTERNATE FOR THE 7/8" Ø GALVANIZED BOLTS, NUTS AND WASHERS. THEY SHALL CONFORM TO OR EXCEED THE MECHANICAL REQUIREMENTS OF ASTM A307. THE USE OF THIS ALTERNATE SHALL BE APPROVED BY THE ENGINEER.)

THE GUARDRAIL ANCHOR ASSEMBLY IS REQUIRED AT ALL POINTS WHERE APPROACH GUARDRAIL IS TO BE ATTACHED TO THE END OF BARRIER RAIL. FOR POINTS OF ATTACHMENT, SEE SKETCH.

AFTER INSTALLATION, THE EXPOSED THREAD OF THE BOLT SHALL BE BURRED WITH A SHARP POINTED TOOL.

THE COST OF THE GUARDRAIL ANCHOR ASSEMBLY SHALL BE INCLUDED IN THE UNIT CONTRACT PRICE BID FOR VERTICAL CONCRETE BARRIER RAIL.

THE VERTICAL REINFORCING BARS MAY BE SHIFTED SLIGHTLY IN THE VERTICAL CONCRETE BARRIER RAIL TO CLEAR ASSEMBLY BOLTS.

THE 1 1/4" Ø HOLES SHALL BE FORMED OR DRILLED WITH A CORE BIT. IMPACT TOOLS WILL NOT BE PERMITTED. ANY CONCRETE DAMAGED BY THIS WORK SHALL BE REPAIRED TO THE SATISFACTION OF THE ENGINEER.

PROJECT NO. B-5709
BLADEN COUNTY
STATION: 16+25.00 -L-

STATE OF NORTH CAROLINA
DEPARTMENT OF TRANSPORTATION
RALEIGH

SUPERSTRUCTURE

STANDARD GUARDRAIL ANCHORAGE FOR VERTICAL CONCRETE BARRIER RAIL

CDM Smith
CDM SMITH
5400 Glenwood Avenue, Suite 400
Raleigh, NC 27612-3228
NC COA No. F-1255

DRAWN BY : A.L. STROUD DATE : 04/17
CHECKED BY : DATE : 04/17
DESIGN ENGINEER : DATE : 04/17

DWG. No.

5/17/2017
NORTH CAROLINA PROFESSIONAL SEAL 33698 ENGINEER JOSHUA B. TAYLOR
DocuSigned by: Joshua B. Taylor

REVISIONS						SHEET NO.
NO.	BY:	DATE:	NO.	BY:	DATE:	S-13
1			3			TOTAL SHEETS
2			4			23

FILE: c:\pw_pll\taylorjb\d0349162\B5709_SMU_GR_013_080154.dgn
DATE: 5/16/2017 2:26:34 PM

NOTES

STIRRUPS IN CAP MAY BE SHIFTED AS NECESSARY TO CLEAR DOWELS.

THE CONCRETE IN THE SHADED AREA OF THE WING SHALL BE POURED AFTER THE VERTICAL CONCRETE BARRIER RAIL IS CAST IF SLIP FORMING IS USED.

FOR PILE SPLICE DETAILS, SEE SHEET 5 OF 5.

FOR WING DETAILS, SEE SHEET 3 OF 5.

THE LATERAL GUIDE IS NOT TO BE POURED UNTIL AFTER CORED SLAB UNITS ARE IN PLACE.

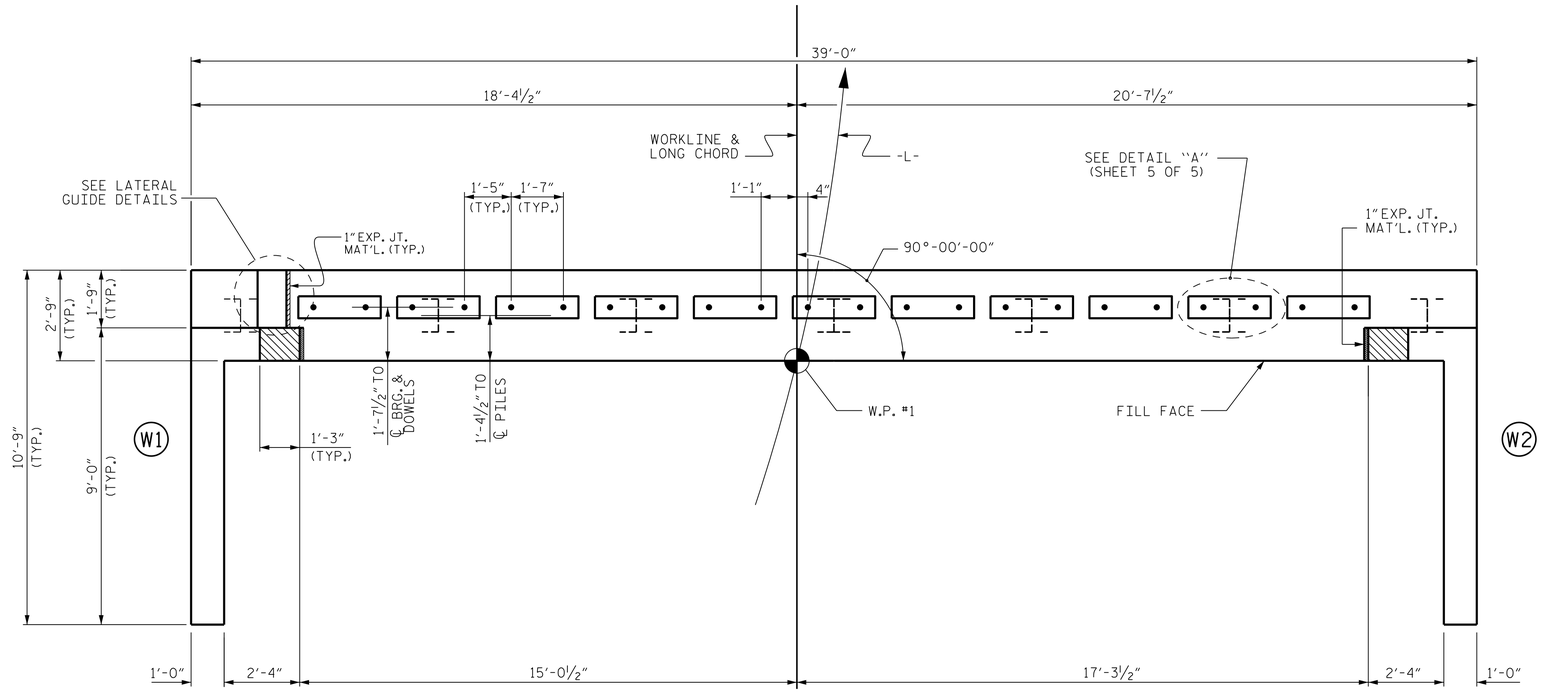

PLAN

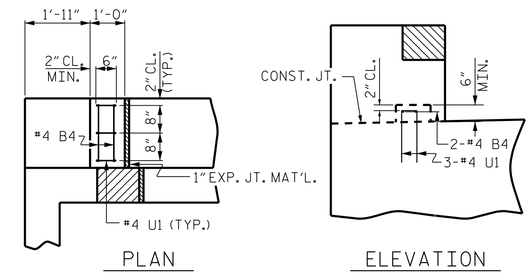

LATERAL GUIDE DETAILS

AT LEFT SIDE ONLY

TOP OF PILE ELEVATIONS	
1	47.67
2	48.03
3	48.39
4	48.75
5	49.11
6	49.47
7	49.83

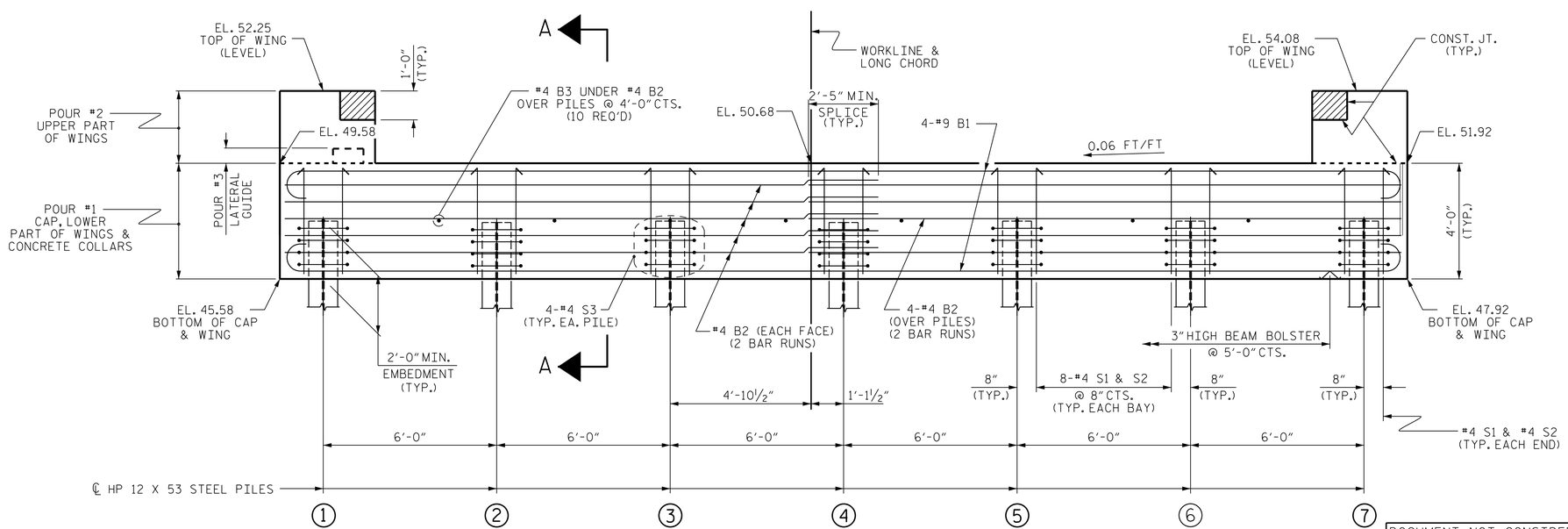

ELEVATION

WINGS NOT SHOWN FOR CLARITY.
FOR SECTION A-A, SEE SHEET 5 OF 5.
CONCRETE COLLARS FOR STEEL PILES NOT SHOWN IN PLAN AND ELEVATION VIEWS FOR CLARITY.
SEE "CORROSION PROTECTION FOR STEEL PILES DETAIL", SHEET 5 OF 5.

PROJECT NO. B-5709
BLADEN COUNTY
STATION: 16+25.00 -L-

SHEET 1 OF 5

STATE OF NORTH CAROLINA
DEPARTMENT OF TRANSPORTATION
RALEIGH

SUBSTRUCTURE

END BENT 1

DOCUMENT NOT CONSIDERED FINAL UNLESS ALL SIGNATURES COMPLETED

CDM Smith
CDM SMITH
5400 Glenwood Avenue, Suite 400
Raleigh, NC 27612-3228
NC COA No. F-1255

DRAWN BY : A.L. STROUD DATE : 04/17
CHECKED BY : J.B. TAYLOR DATE : 04/17
DESIGN ENGINEER : J.B. TAYLOR DATE : 04/17

DWG. No.

NORTH CAROLINA PROFESSIONAL SEAL 33698 ENGINEER JOSHUA B. TAYLOR
5/19/2017
DocuSigned by: Joshua B. Taylor

REVISIONS						SHEET NO.
NO.	BY:	DATE:	NO.	BY:	DATE:	S-14
1			3			TOTAL SHEETS
2			4			22

FILE: c:\pw_pll\stroudal\d034982\d01_027_B5709_SMU_EI_014_080154.dgn
DATE: 5/19/2017 1:00:38 PM

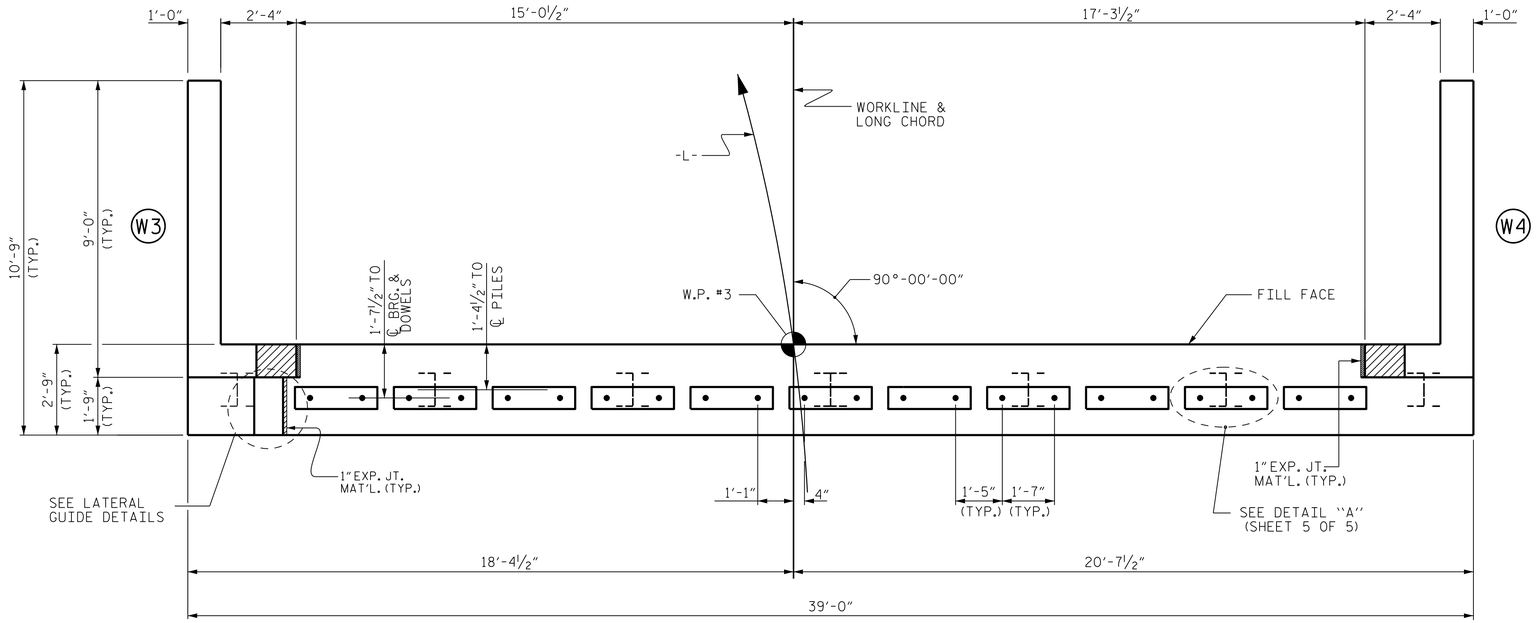

PLAN

NOTES

STIRRUPS IN CAP MAY BE SHIFTED AS NECESSARY TO CLEAR DOWELS.

THE CONCRETE IN THE SHADED AREA OF THE WING SHALL BE POURED AFTER THE VERTICAL CONCRETE BARRIER RAIL IS CAST IF SLIP FORMING IS USED.

FOR PILE SPLICE DETAILS, SEE SHEET 5 OF 5.

FOR WING DETAILS, SEE SHEET 4 OF 5.

THE LATERAL GUIDE IS NOT TO BE POURED UNTIL AFTER CORED SLAB UNITS ARE IN PLACE.

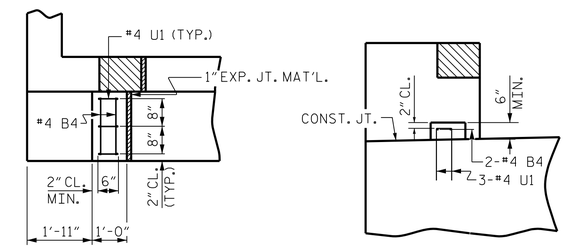

PLAN

ELEVATION

LATERAL GUIDE DETAILS

AT LEFT SIDE ONLY

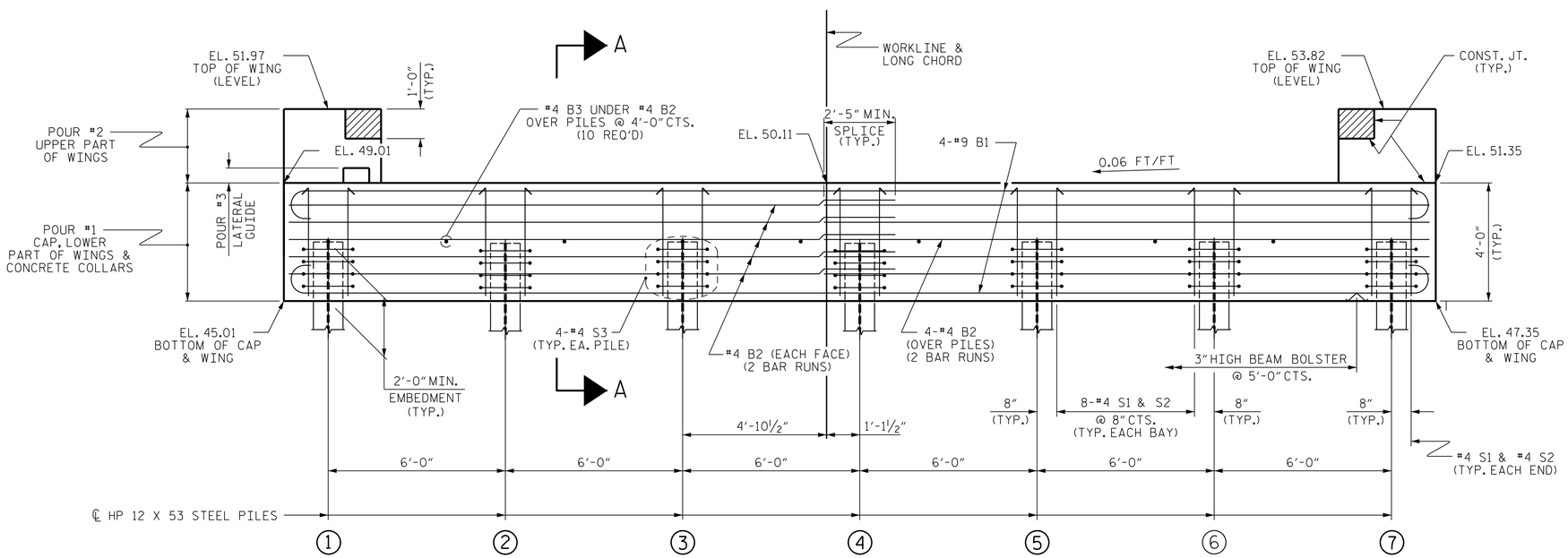

ELEVATION

WINGS NOT SHOWN FOR CLARITY.
FOR SECTION A-A, SEE SHEET 5 OF 5.
CONCRETE COLLARS FOR STEEL PILES NOT SHOWN IN PLAN AND ELEVATION VIEWS FOR CLARITY.
SEE "CORROSION PROTECTION FOR STEEL PILES DETAIL", SHEET 5 OF 5.

TOP OF PILE ELEVATIONS	
1	47.10
2	47.46
3	47.82
4	48.18
5	48.54
6	48.90
7	49.26

PROJECT NO. B-5709
BLADEN COUNTY
STATION: 16+25.00 -L-

SHEET 2 OF 5

DOCUMENT NOT CONSIDERED FINAL UNLESS ALL SIGNATURES COMPLETED

CDM Smith
CDM SMITH
5400 Glenwood Avenue, Suite 400
Raleigh, NC 27612-3228
NC COA No. F-1255

DRAWN BY : A.L. STROUD DATE : 04/17
CHECKED BY : J.B. TAYLOR DATE : 04/17
DESIGN ENGINEER : J.B. TAYLOR DATE : 04/17

DWG. No.

NORTH CAROLINA PROFESSIONAL SEAL 33698 ENGINEER JOSHUA B. TAYLOR
5/19/2017
DocuSigned by: Joshua B. Taylor

STATE OF NORTH CAROLINA
DEPARTMENT OF TRANSPORTATION
RALEIGH

SUBSTRUCTURE

END BENT 2

REVISIONS						SHEET NO.
NO.	BY:	DATE:	NO.	BY:	DATE:	S-15
1			3			TOTAL SHEETS
2			4			22

FILE: C:\pw_pll\stroudal\d0349162\401_029_B5709_SMU_E2_015_080154.dgn
DATE: 5/19/2017 1:04:26 PM

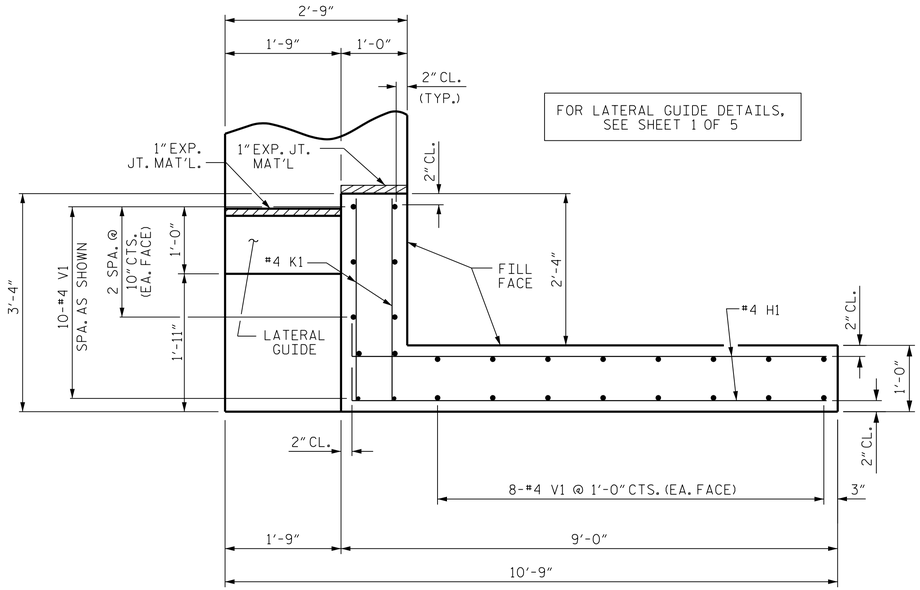

PLAN OF WING (W1)

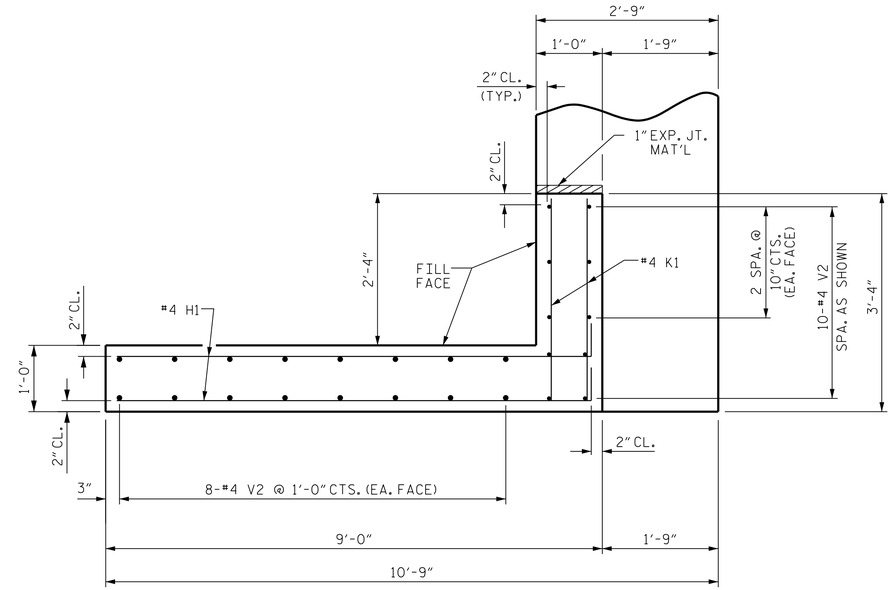

PLAN OF WING (W2)

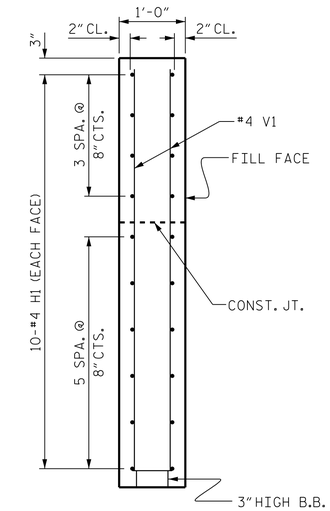

SECTION X-X

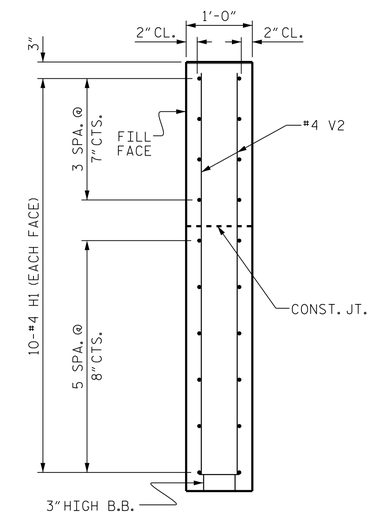

SECTION Y-Y

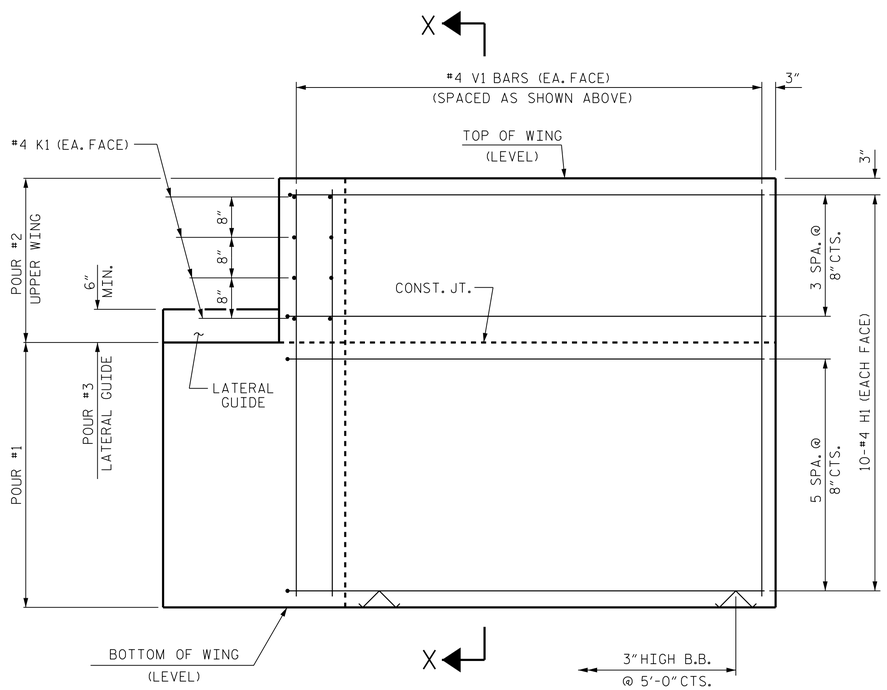

ELEVATION OF WING (W1)

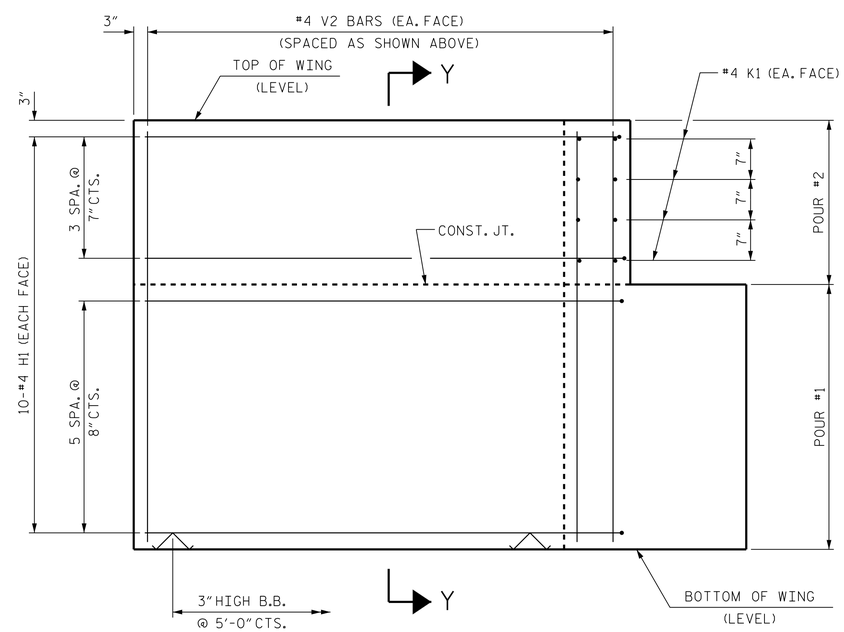

ELEVATION OF WING (W2)

WING DETAILS

PROJECT NO. B-5709

BLADEN COUNTY

STATION: 16+25.00 -L-

SHEET 3 OF 5

STATE OF NORTH CAROLINA
DEPARTMENT OF TRANSPORTATION
RALEIGH

SUBSTRUCTURE

END BENT 1
WING DETAILS

CDM Smith
CDM SMITH
5400 Glenwood Avenue, Suite 400
Raleigh, NC 27612-3228
NC COA No. F-1255

DOCUMENT NOT CONSIDERED FINAL UNLESS ALL SIGNATURES COMPLETED

DRAWN BY : A.L. STROUD DATE : 04/17
CHECKED BY : J.B. TAYLOR DATE : 04/17
DESIGN ENGINEER : J.B. TAYLOR DATE : 04/17

DWG. No.

5/17/2017
NORTH CAROLINA PROFESSIONAL SEAL 33698 ENGINEER JOSHUA B. TAYLOR
DocuSigned by: Joshua B. Taylor

REVISIONS						SHEET NO.
NO.	BY:	DATE:	NO.	BY:	DATE:	S-16
1			3			TOTAL SHEETS
2			4			22

FILE: c:\pw_pll\taylorjb\d0349162\401_031_B5709_SMU_E3_016_080154.dgn
DATE: 5/16/2017 5:20:36 PM

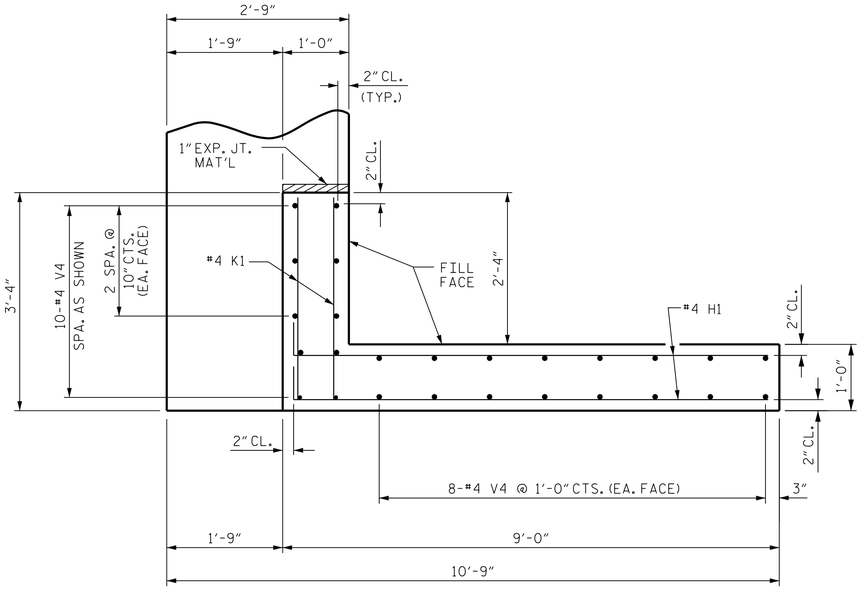

PLAN OF WING (W4)

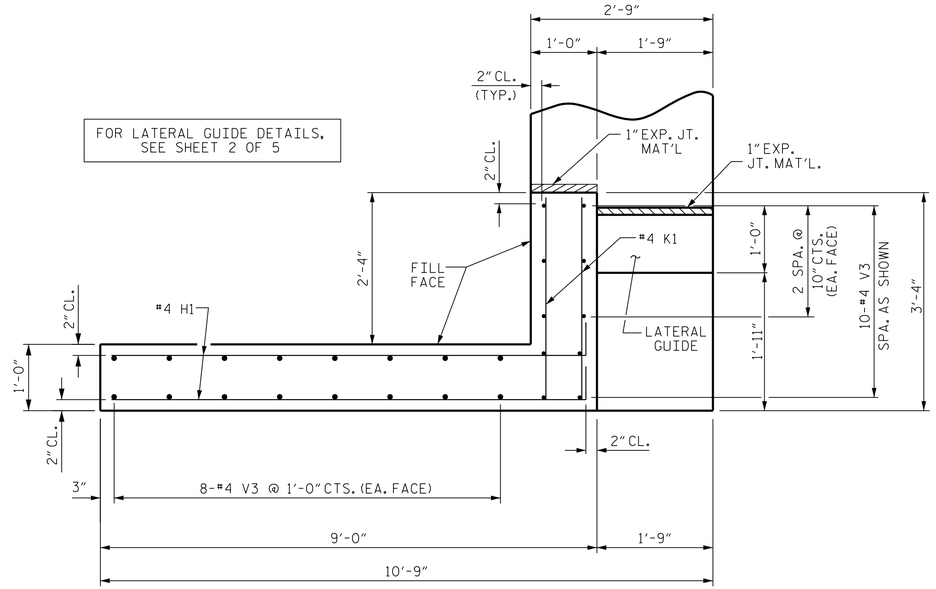

PLAN OF WING (W3)

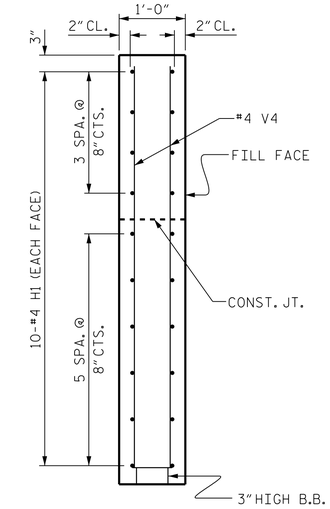

SECTION X-X

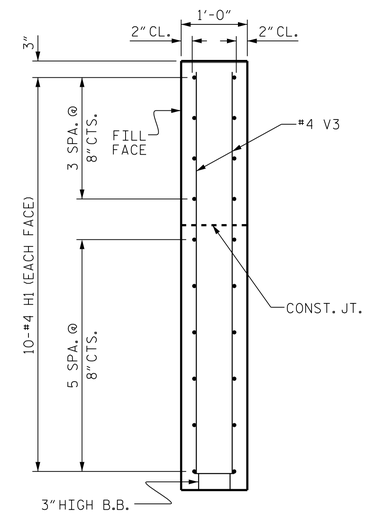

SECTION Y-Y

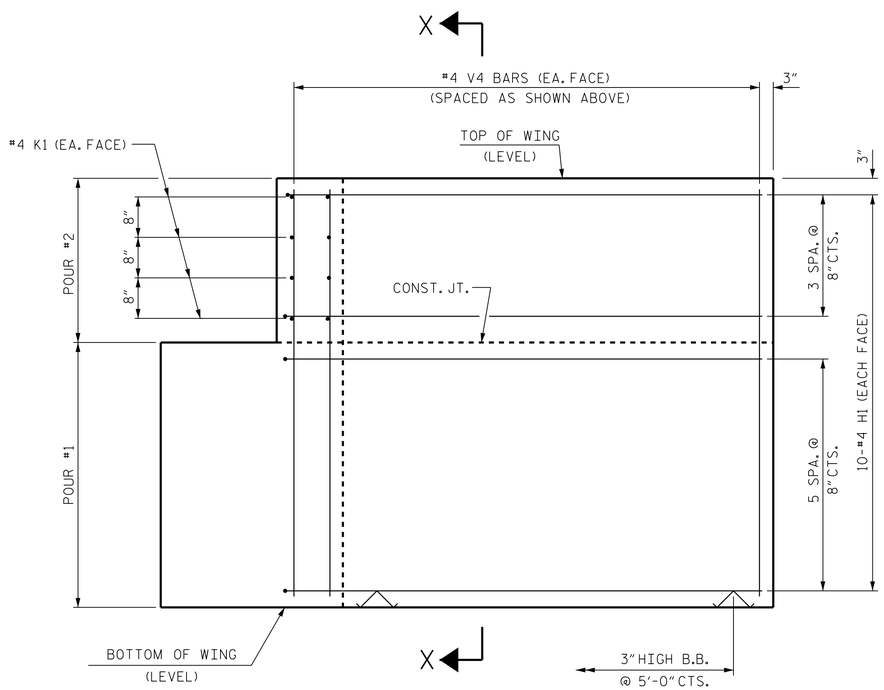

ELEVATION OF WING (W4)

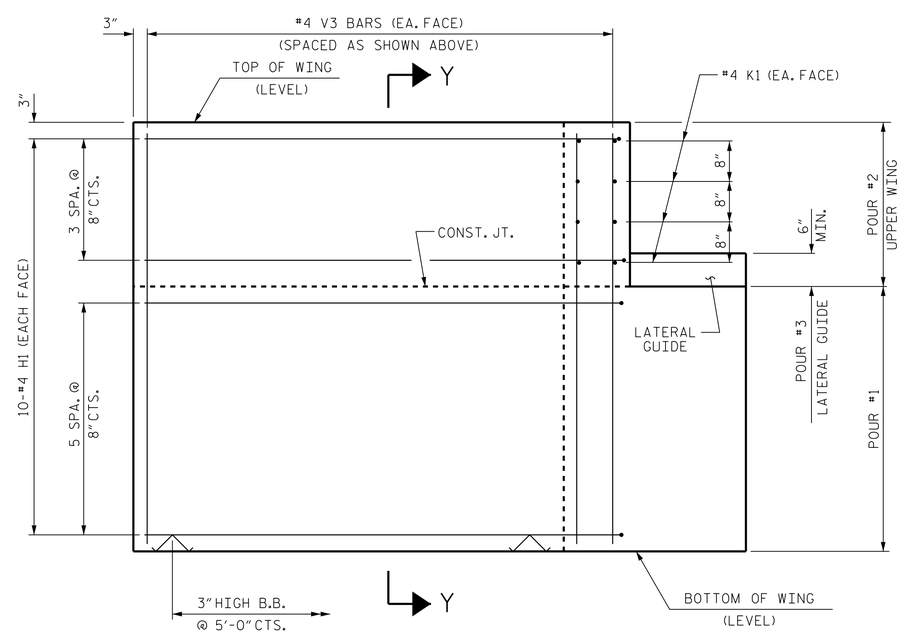

ELEVATION OF WING (W3)

WING DETAILS

PROJECT NO. B-5709

BLADEN COUNTY

STATION: 16+25.00 -L-

SHEET 4 OF 5

STATE OF NORTH CAROLINA
DEPARTMENT OF TRANSPORTATION
RALEIGH

SUBSTRUCTURE

END BENT 2
WING DETAILS

CDM Smith
CDM SMITH
5400 Glenwood Avenue, Suite 400
Raleigh, NC 27612-3228
NC COA No. F-1255

DOCUMENT NOT CONSIDERED FINAL UNLESS ALL SIGNATURES COMPLETED

DRAWN BY :	A.L. STROUD	DATE :	04/17
CHECKED BY :	J.B. TAYLOR	DATE :	04/17
DESIGN ENGINEER :	J.B. TAYLOR	DATE :	04/17

DWG. No.

NORTH CAROLINA PROFESSIONAL SEAL 33698 ENGINEER JOSHUA B. TAYLOR
5/17/2017
DocuSigned by: Joshua B. Taylor

REVISIONS							SHEET NO.
NO.	BY:	DATE:	NO.	BY:	DATE:		S-17
1			3				TOTAL SHEETS
2			4				22

FILE: c:\pw_pll\taylorjb\d0349162\401_033_B5709_SMU_E4_017_080154.dgn
DATE: 5/16/2017 2:29:10 PM

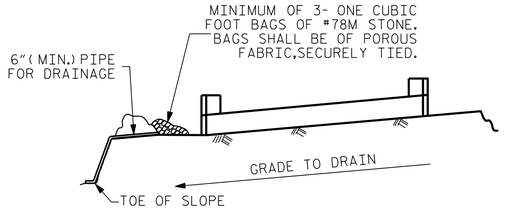

BAGGED STONE AND PIPE SHALL BE PLACED IMMEDIATELY AFTER COMPLETION OF END BENT EXCAVATION. PIPE MAY BE EITHER CONCRETE, CORRUGATED STEEL, CORRUGATED ALUMINUM ALLOY, OR CORRUGATED PLASTIC. PERFORATED PIPE WILL NOT BE ALLOWED.

BAGGED STONE SHALL REMAIN IN PLACE UNTIL THE ENGINEER DIRECTS THAT IT BE REMOVED. THE CONTRACTOR SHALL REMOVE AND DISPOSE OF SILT ACCUMULATIONS AT BAGGED STONE WHEN SO DIRECTED BY THE ENGINEER. BAGS SHALL BE REMOVED AND REPLACED WHENEVER THE ENGINEER DETERMINES THAT THEY HAVE DETERIORATED AND LOST THEIR EFFECTIVENESS.

NO SEPARATE PAYMENT WILL BE MADE FOR THIS WORK AND THE ENTIRE COST OF THIS WORK SHALL BE INCLUDED IN THE UNIT CONTRACT PRICE BID FOR THE SEVERAL PAY ITEMS.

TEMPORARY DRAINAGE AT END BENT

BAR TYPES

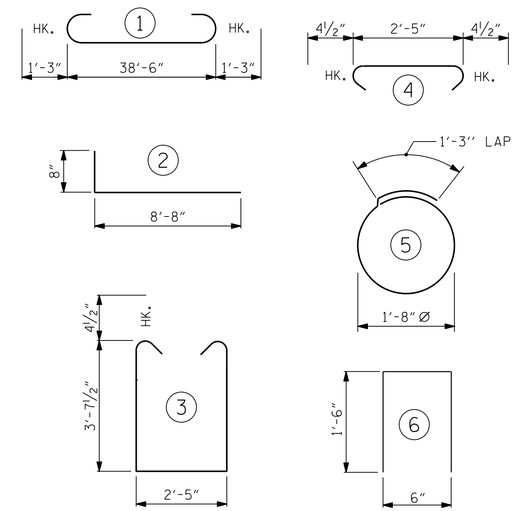

ALL BAR DIMENSIONS ARE OUT TO OUT.

BILL OF MATERIAL

END BENT 1

BAR	NO.	SIZE	TYPE	LENGTH	WEIGHT
B1	8	#9	1	41'-0"	1115
B2	28	#4	STR	20'-7"	385
B3	10	#4	STR	2'-5"	16
B4	2	#4	STR	1'-5"	2
D1	22	#6	STR	1'-6"	50
H1	40	#4	2	9'-4"	249
K1	16	#4	STR	2'-11"	31
S1	50	#4	3	10'-5"	348
S2	50	#4	4	3'-2"	106
S3	28	#4	5	6'-6"	122
U1	3	#4	6	3'-6"	7
V1	26	#4	STR	6'-4"	110
V2	26	#4	STR	5'-9"	100

REINFORCING STEEL 2640 LBS.

CLASS A CONCRETE BREAKDOWN:

POUR #1	CAP, LOWER PART OF WINGS & COLLARS	19.5 C.Y.
POUR #2	UPPER PART OF WINGS	2.0 C.Y.
POUR #3	LATERAL GUIDE	0.1 C.Y.
TOTAL CLASS A CONCRETE		21.6 C.Y.

HP 12 X 53 STEEL PILES
NO: 7 LIN. FT.= 385
PILE DRIVING EQUIP. SETUP EA. 7

END BENT 2

BAR	NO.	SIZE	TYPE	LENGTH	WEIGHT
B1	8	#9	1	41'-0"	1115
B2	28	#4	STR	20'-7"	385
B3	10	#4	STR	2'-5"	16
B4	2	#4	STR	1'-5"	2
D1	22	#6	STR	1'-6"	50
H1	40	#4	2	9'-4"	249
K1	16	#4	STR	2'-11"	31
S1	50	#4	3	10'-5"	348
S2	50	#4	4	3'-2"	106
S3	28	#4	5	6'-6"	122
U1	3	#4	6	3'-6"	7
V3	26	#4	STR	6'-7"	114
V4	26	#4	STR	6'-1"	106

REINFORCING STEEL 2651 LBS.

CLASS A CONCRETE BREAKDOWN:

POUR #1	CAP, LOWER PART OF WINGS & COLLARS	19.5 C.Y.
POUR #2	UPPER PART OF WINGS	2.3 C.Y.
POUR #3	LATERAL GUIDE	0.1 C.Y.
TOTAL CLASS A CONCRETE		21.9 C.Y.

HP 12 X 53 STEEL PILES
NO: 7 LIN. FT.= 385
PILE DRIVING EQUIP. SETUP EA. 7

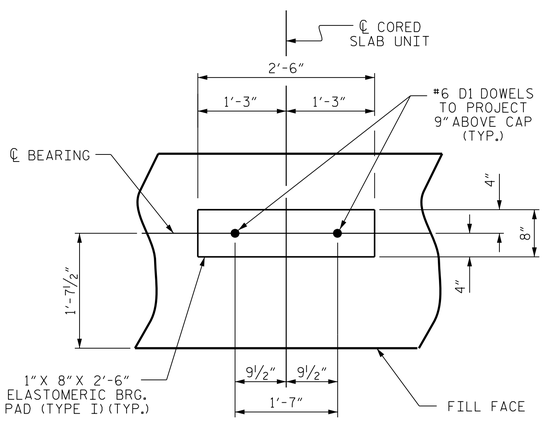

DETAIL "A"

(END BENT 1 SHOWN, END BENT 2 SIMILAR BY ROTATION)

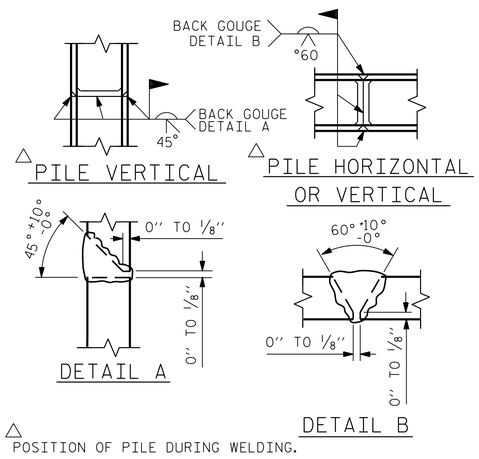

PILE SPLICE DETAILS

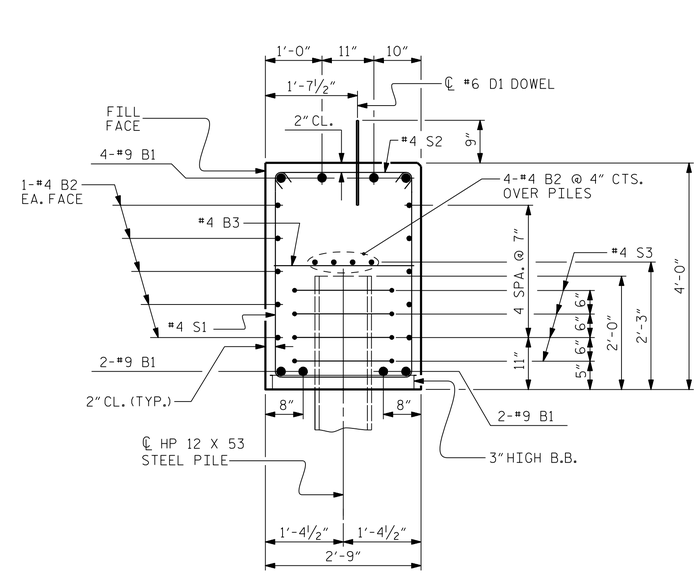

SECTION A-A

(CONCRETE COLLAR NOT SHOWN FOR CLARITY. SEE "CORROSION PROTECTION FOR STEEL PILES DETAIL.")

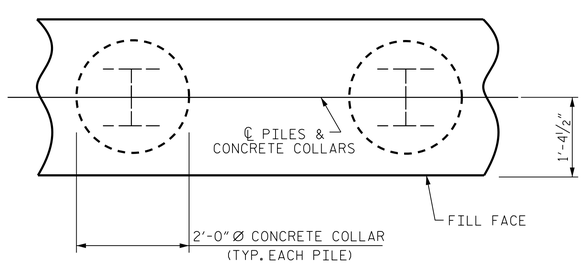

PLAN

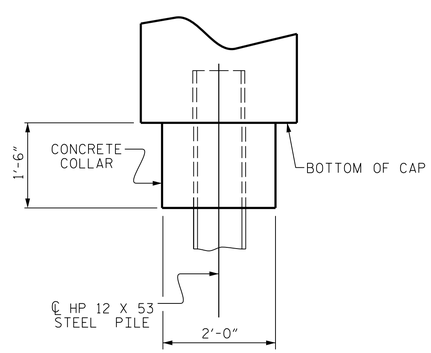

ELEVATION

CORROSION PROTECTION FOR STEEL PILES DETAIL

(END BENT 1 SHOWN, END BENT 2 SIMILAR BY ROTATION)

PROJECT NO. B-5709
BLADEN COUNTY
STATION: 16+25.00 -L-

SHEET 5 OF 5

STATE OF NORTH CAROLINA
DEPARTMENT OF TRANSPORTATION
RALEIGH

SUBSTRUCTURE

END BENTS 1 & 2 DETAILS

CDM Smith
CDM SMITH
5400 Glenwood Avenue, Suite 400
Raleigh, NC 27612-3228
NC COA No. F-1255

DOCUMENT NOT CONSIDERED FINAL UNLESS ALL SIGNATURES COMPLETED

DRAWN BY : A.L. STROUD DATE : 04/17
CHECKED BY : J.B. TAYLOR DATE : 04/17
DESIGN ENGINEER : J.B. TAYLOR DATE : 04/17

DWG. No.

NORTH CAROLINA PROFESSIONAL SEAL 33698 ENGINEER JOSHUA B. TAYLOR
5/17/2017
DocuSigned by: Joshua B. Taylor

REVISIONS						SHEET NO.
NO.	BY:	DATE:	NO.	BY:	DATE:	S-18
1			3			TOTAL SHEETS
2			4			22

FILE: c:\pw_pll\taylorjb\d0341921\d01_035_B5709_SMU_E5_018_080154.dgn
DATE: 5/16/2017 2:29:37 PM

NOTES

STIRRUPS IN CAP MAY BE SHIFTED AS NECESSARY TO CLEAR DOWELS.

★ INVERT ALTERNATE STIRRUPS.

THE LATERAL GUIDE IS NOT TO BE POURED UNTIL AFTER CORED SLAB UNITS ARE IN PLACE.

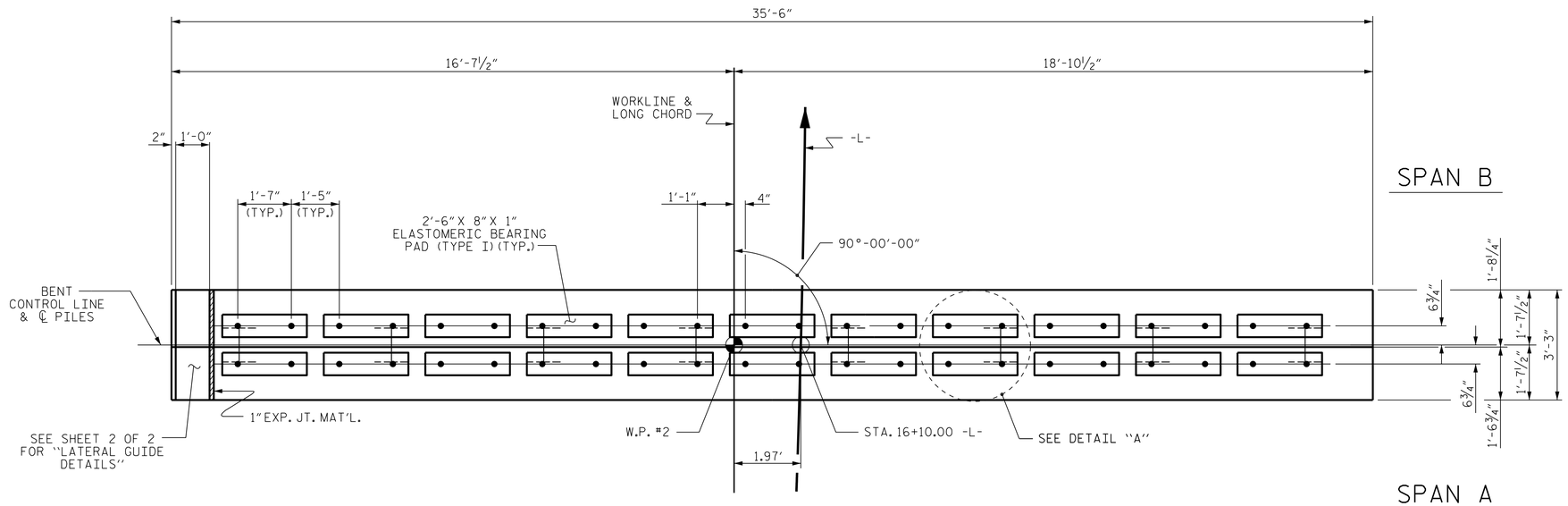

PLAN

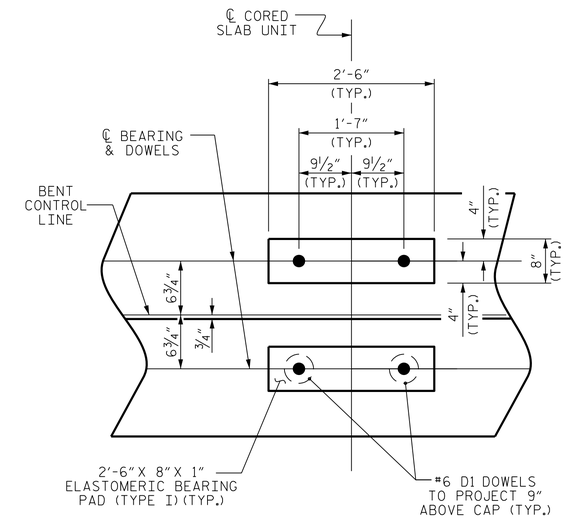

DETAIL "A"

(DIMENSIONS ARE TYPICAL EACH BEARING)

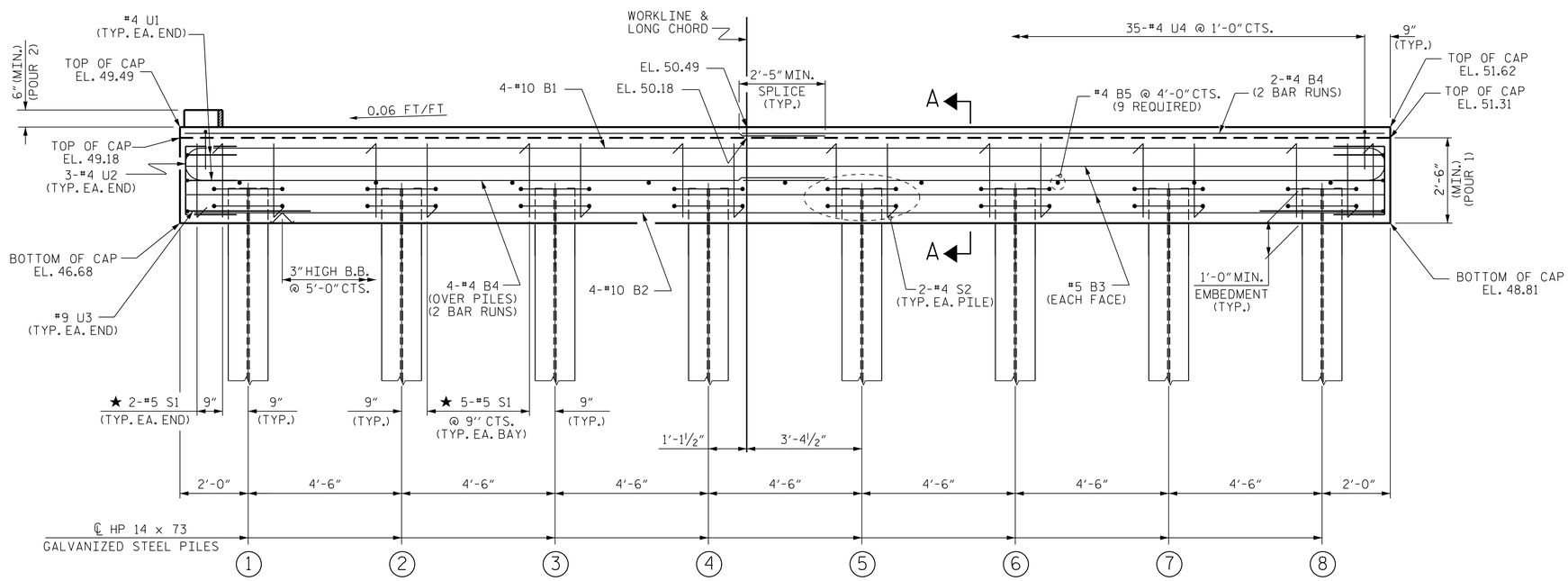

ELEVATION

FOR SECTION A-A, SEE SHEET 2 OF 2

TOP OF PILE ELEVATIONS	
1	47.80
2	48.07
3	48.34
4	48.61
5	48.88
6	49.15
7	49.42
8	49.69

PROJECT NO. B-5709

BLADEN COUNTY

STATION: 16+25.00 -L-

SHEET 1 OF 2

DOCUMENT NOT CONSIDERED FINAL UNLESS ALL SIGNATURES COMPLETED

CDM Smith
CDM SMITH
5400 Glenwood Avenue, Suite 400
Raleigh, NC 27612-3228
NC COA No. F-1255

DRAWN BY : A.L. STROUD DATE : 04/17
CHECKED BY : J.B. TAYLOR DATE : 04/17
DESIGN ENGINEER : J.B. TAYLOR DATE : 04/17

DWG. No.

NORTH CAROLINA PROFESSIONAL SEAL 33698 ENGINEER JOSHUA B. TAYLOR
5/19/2017
DocuSigned by: Joshua B. Taylor

STATE OF NORTH CAROLINA
DEPARTMENT OF TRANSPORTATION
RALEIGH

SUBSTRUCTURE

BENT 1

REVISIONS						SHEET NO.
NO.	BY:	DATE:	NO.	BY:	DATE:	S-19
1			3			TOTAL SHEETS
2			4			22

FILE: c:\pw_pll\stroudal\d0349163\401_037_B5709_SMU_B1_019_080154.dgn
DATE: 5/19/2017 1:07:24 PM

STD. NO. 14" HP_BT_33_90S_<60'

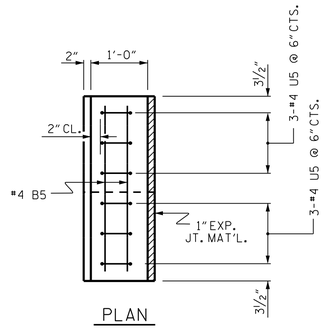

PLAN

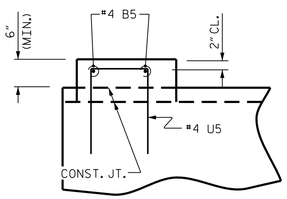

ELEVATION

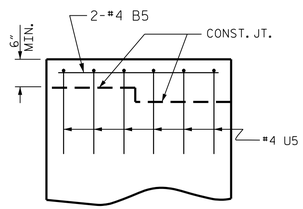

SIDE VIEW

LATERAL GUIDE DETAILS

AT LEFT SIDE ONLY

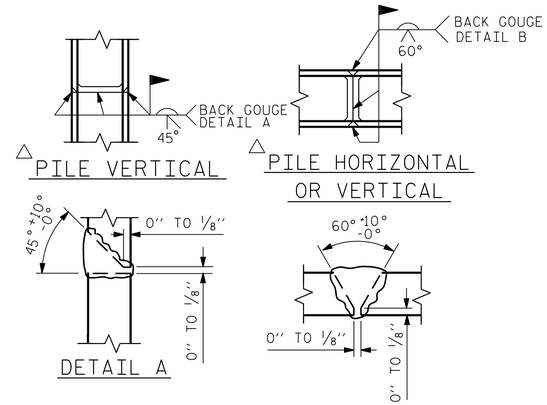

△ POSITION OF PILE DURING WELDING.

PILE SPLICE DETAILS

BAR TYPES

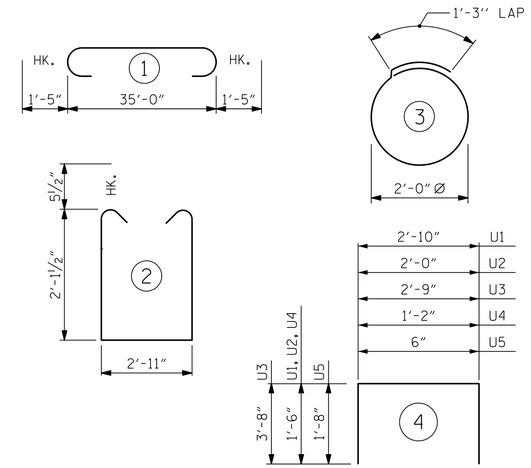

ALL BAR DIMENSIONS ARE OUT TO OUT.

BILL OF MATERIAL

BENT 1

BAR	NO.	SIZE	TYPE	LENGTH	WEIGHT
B1	4	#10	1	37'-10"	651
B2	4	#10	STR	35'-2"	605
B3	4	#5	STR	35'-2"	147
B4	12	#4	STR	18'-10"	151
B5	11	#4	STR	2'-11"	21
D1	44	#6	STR	1'-6"	99
S1	39	#5	2	8'-1"	329
S2	16	#4	3	7'-7"	81
U1	4	#4	4	5'-10"	16
U2	6	#4	4	5'-0"	20
U3	2	#9	4	10'-1"	69
U4	35	#4	4	4'-2"	97
U5	6	#4	4	3'-10"	15

REINFORCING STEEL 2301 LBS

CLASS A CONCRETE BREAKDOWN:

POUR 1 (BENT CAP) 11.3 C.Y.

POUR 2 (LATERAL GUIDE) 0.1 C.Y.

TOTAL CLASS A CONCRETE 11.4 C.Y.

HP 14 X 73 GALVANIZED STEEL PILES

No. 8 LIN. FT. 520

PILE DRIVING EQUIPMENT SETUP EA. 8

NOTE: GALVANIZE THE TOP OF EACH INTERIOR BENT PILE A MINIMUM OF 24 FEET. GALVANIZE IN ACCORDANCE WITH SECTION 1076 THE STANDARD SPECIFICATIONS.

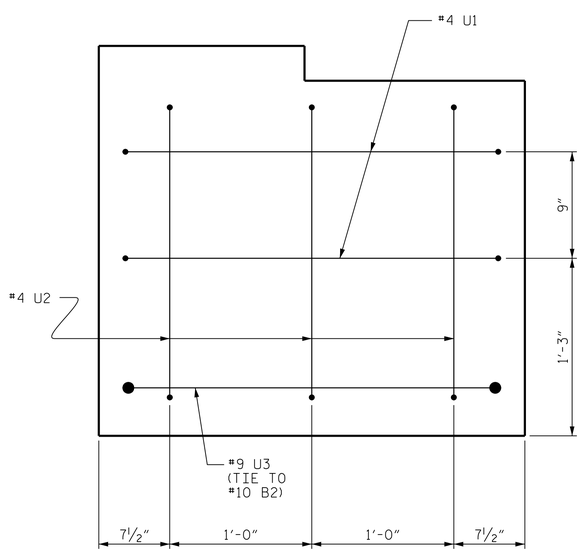

END OF CAP VIEW

(SIMILAR BOTH ENDS)

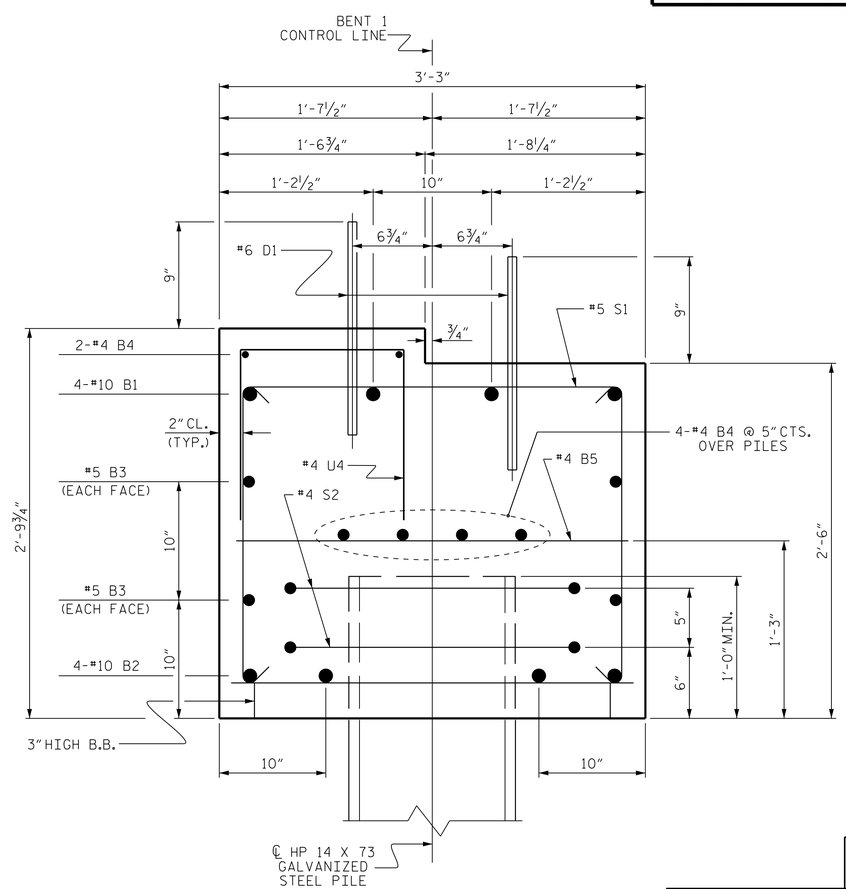

SECTION A-A

PROJECT NO. B-5709

BLADEN COUNTY

STATION: 16+25.00 -L-

SHEET 2 OF 2

DOCUMENT NOT CONSIDERED FINAL UNLESS ALL SIGNATURES COMPLETED

CDM Smith

CDM SMITH
5400 Glenwood Avenue, Suite 400
Raleigh, NC 27612-3228
NC COA No. F-1255

DRAWN BY : A.L. STROUD DATE : 04/17
CHECKED BY : J.B. TAYLOR DATE : 04/17
DESIGN ENGINEER : J.B. TAYLOR DATE : 04/17

DWG. No.

NORTH CAROLINA PROFESSIONAL SEAL 33698 ENGINEER JOSHUA B. TAYLOR
6/17/2017
DocuSigned by: Joshua B. Taylor

STATE OF NORTH CAROLINA
DEPARTMENT OF TRANSPORTATION
RALEIGH

SUBSTRUCTURE

BENT 1

REVISIONS						SHEET NO.
NO.	BY:	DATE:	NO.	BY:	DATE:	S-20
1			3			TOTAL SHEETS
2			4			22

FILE: c:\pw_pll\taylorjb\d0349162\401_039_B5709_SMU_B1_020_080154.dgn
DATE: 5/9/2017 2:30:44 PM

STD. NO. DP_BT_33_90S_<50'

ESTIMATED QUANTITIES		
BRIDGE @ STA. 16+25.00 -L-	RIP RAP CLASS II	FILTER FABRIC FOR DRAINAGE
	TONS	SQUARE YARDS
END BENT 1	95	105
END BENT 2	78	87

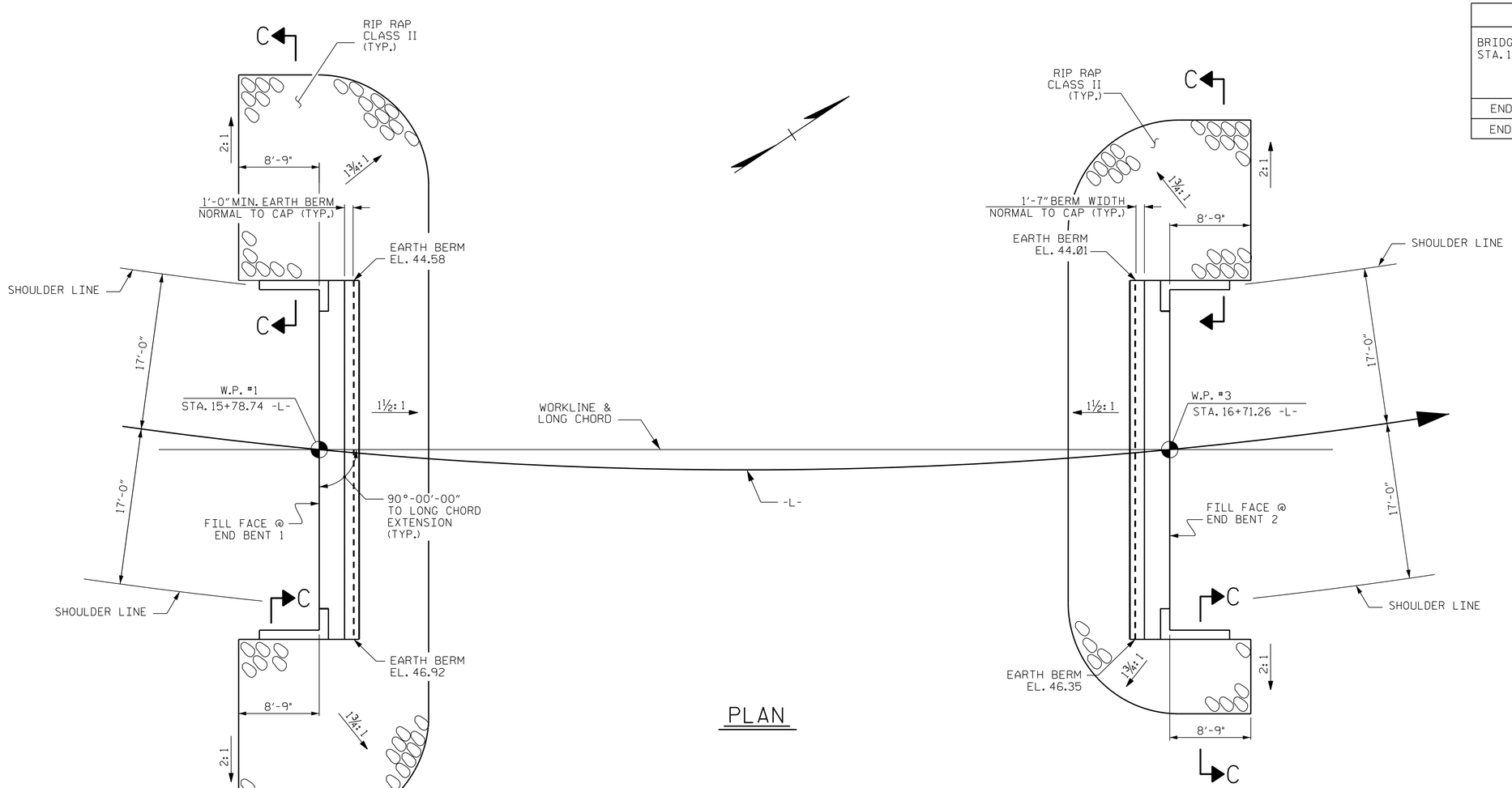

PLAN

AT END BENT 1

AT END BENT 2

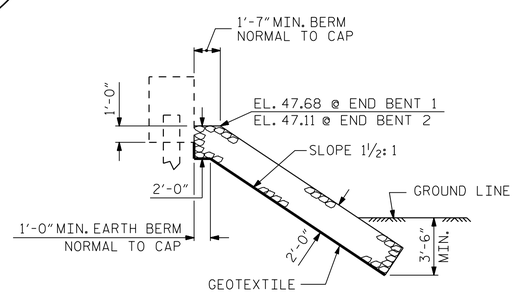

℄ SECTION
BERM RIP RAPPED

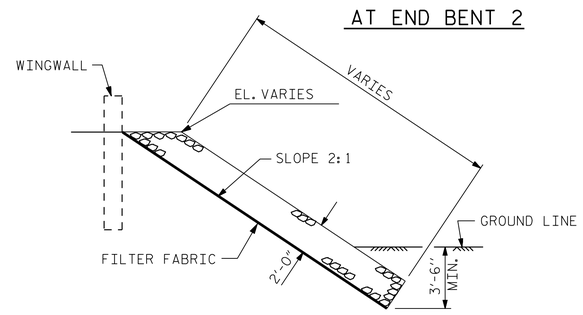

SECTION C-C

PROJECT NO. B-5709
BLADEN COUNTY
STATION: 16+25.00 -L-

STATE OF NORTH CAROLINA
DEPARTMENT OF TRANSPORTATION
RALEIGH

STANDARD
RIP RAP DETAILS

CDM Smith
CDM SMITH
5400 Glenwood Avenue, Suite 400
Raleigh, NC 27612-3228
NC COA No. F-1255

DOCUMENT NOT CONSIDERED FINAL UNLESS ALL SIGNATURES COMPLETED

DRAWN BY : A.L. STROUD DATE : 04/17
CHECKED BY : J.B. TAYLOR DATE : 04/17
DESIGN ENGINEER : J.B. TAYLOR DATE : 04/17

DWG. No.

5/19/2017
NORTH CAROLINA PROFESSIONAL SEAL 33698 ENGINEER JOSHUA B. TAYLOR
DocuSigned by: Joshua B. Taylor

REVISIONS						SHEET NO.
NO.	BY:	DATE:	NO.	BY:	DATE:	S-21
1			3			TOTAL SHEETS
2			4			22

FILE: c:\pw_pll\stroudal\d0349162\401_041_B5709_SMU_RR_021_080154.dgn
DATE: 5/19/2017 1:10:02 PM

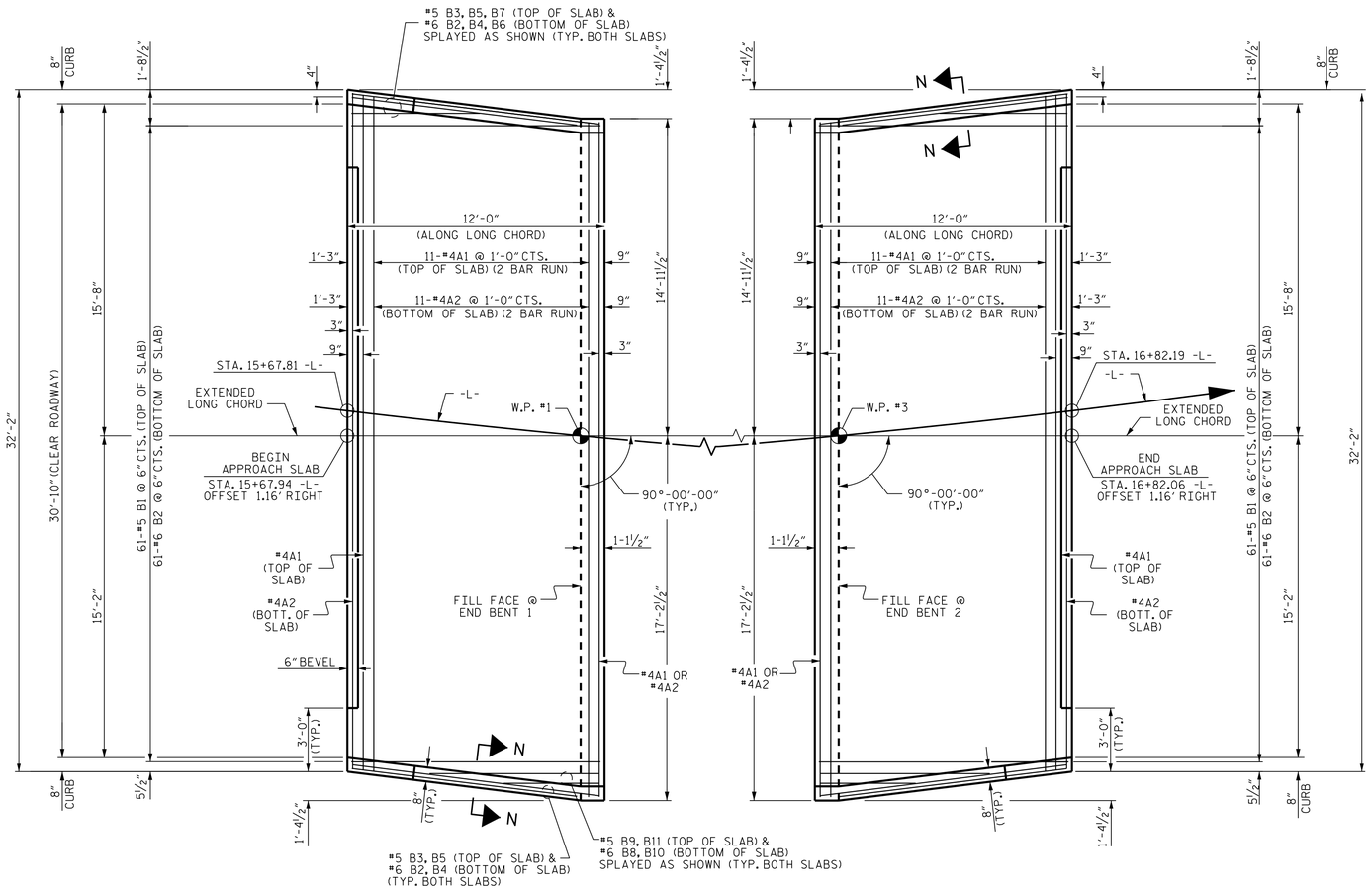

AT END BENT 1 — AT END BENT 2

PLAN

DIMENSIONS SHOWN ARE TYPICAL FOR BOTH APPROACH SLABS

NOTES

FOR BRIDGE APPROACH FILL INCLUDING GEOTEXTILE, 4" Ø DRAINAGE PIPE, AND #78M STONE BACKFILL, SEE ROADWAY PLANS.

GEOTEXTILE SHALL BE TYPE 1 IN ACCORDANCE WITH THE STANDARD SPECIFICATIONS SECTION 1056.

#78M STONE BACKFILL (CLASS V SELECT MATERIAL) SHALL BE IN ACCORDANCE WITH STANDARD SPECIFICATIONS SECTION 1016.

#78M STONE BACKFILL IS TO BE CONTINUOUS ALONG FILL FACE OF BACKWALL FROM OUTSIDE EDGE TO OUTSIDE EDGE OF APPROACH SLAB.

FOR THE 4" Ø DRAINAGE PIPE OUTLET(S), SEE ROADWAY STANDARD DRAWINGS.

AREA BETWEEN THE WINGWALL AND APPROACH SLAB SHALL BE GRADED TO DRAIN THE WATER AWAY FROM THE FILL FACE OF THE BRIDGE AND SHALL BE PAVED. SEE ROADWAY PLANS.

APPROACH SLAB GROOVING IS NOT REQUIRED.

BILL OF MATERIAL
FOR ONE APPROACH SLAB (2 REQ'D)

BAR	NO.	SIZE	TYPE	LENGTH	WEIGHT
* A1	26	#4	STR	16'-11"	294
A2	26	#4	STR	16'-9"	291
* B1	61	#5	STR	11'-2"	710
B2	65	#6	STR	11'-8"	1139
* B3	4	#5	STR	10'-7"	44
B4	4	#6	STR	10'-7"	64
* B5	4	#5	STR	11'-9"	49
B6	2	#6	STR	6'-0"	18
* B7	2	#5	STR	6'-0"	13
B8	2	#6	STR	8'-0"	24
* B9	2	#5	STR	8'-0"	17
B10	2	#6	STR	4'-6"	14
* B11	2	#5	STR	4'-6"	9
REINFORCING STEEL				LBS.	1550
* EPOXY COATED REINFORCING STEEL				LBS.	1136
CLASS AA CONCRETE					
AT END BENT 1				C.Y.	18.4
AT END BENT 2				C.Y.	19.5
TOTAL				C.Y.	37.9

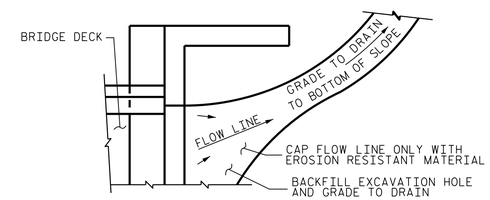

NOTE: IF THE APPROACH SLAB IS NOT CONSTRUCTED IMMEDIATELY AFTER THE BACKFILLING OF THE END BENT EXCAVATION, GRADE TO DRAIN TO THE BOTTOM OF THE SLOPE AND PROVIDE EROSION RESISTANT MATERIAL, SUCH AS FIBERGLASS ROVING OR AS DIRECTED BY THE ENGINEER TO PREVENT SOIL EROSION AND TO PROTECT THE AREA ADJACENT TO THE STRUCTURE. THE CONTRACTOR WILL BE REQUIRED TO REMOVE THESE MATERIALS PRIOR TO CONSTRUCTION OF THE APPROACH SLAB.

TEMPORARY DRAINAGE DETAIL

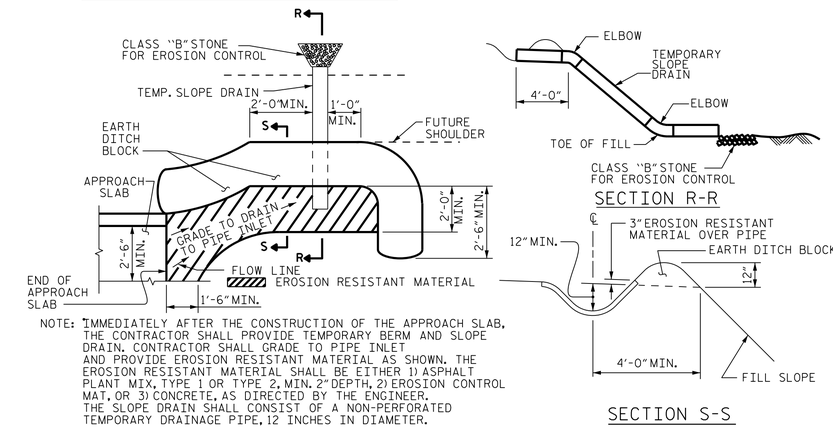

NOTE: IMMEDIATELY AFTER THE CONSTRUCTION OF THE APPROACH SLAB, THE CONTRACTOR SHALL PROVIDE TEMPORARY BERM AND SLOPE DRAIN. CONTRACTOR SHALL GRADE TO PIPE INLET AND PROVIDE EROSION RESISTANT MATERIAL AS SHOWN. THE EROSION RESISTANT MATERIAL SHALL BE EITHER 1) ASPHALT PLANT MIX, TYPE 1 OR TYPE 2, MIN. 2" DEPTH, 2) EROSION CONTROL MAT, OR 3) CONCRETE, AS DIRECTED BY THE ENGINEER. THE SLOPE DRAIN SHALL CONSIST OF A NON-PERFORATED TEMPORARY DRAINAGE PIPE, 12 INCHES IN DIAMETER.

PLAN VIEW

TEMPORARY BERM AND SLOPE DRAIN DETAILS

(TO BE USED WHEN SHOULDER BERM GUTTER IS REQUIRED)

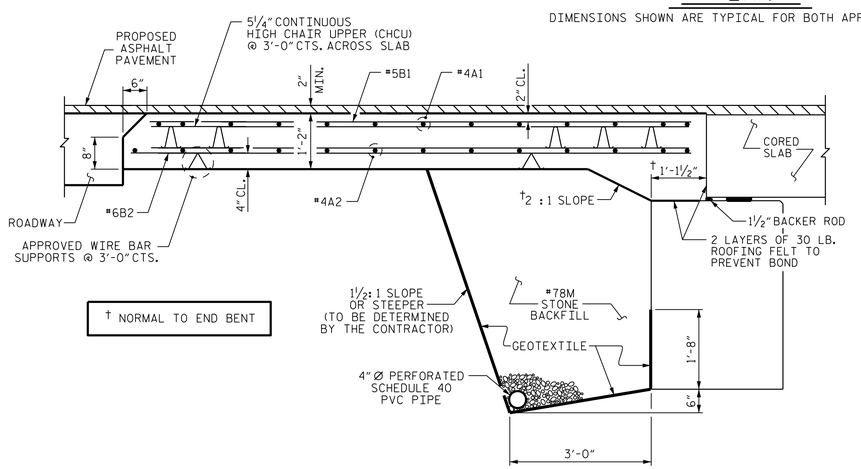

† NORMAL TO END BENT

SECTION THRU SLAB

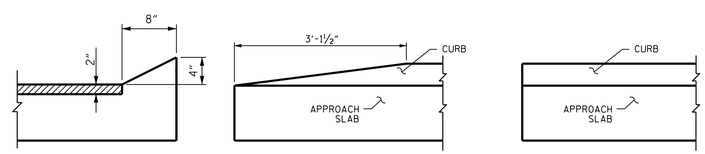

SECTION N-N — END OF CURB WITHOUT SHOULDER BERM GUTTER — END OF CURB WITH SHOULDER BERM GUTTER

CURB DETAILS

SPLICE LENGTHS		
BAR SIZE	EPOXY COATED	UNCOATED
#4	2'-0"	1'-9"
#5	2'-6"	2'-2"
#6	3'-10"	2'-7"

PROJECT NO. B-5709
BLADEN COUNTY
STATION: 16+25.00 -L-

STATE OF NORTH CAROLINA
DEPARTMENT OF TRANSPORTATION
RALEIGH

STANDARD
BRIDGE APPROACH SLAB
FOR PRESTRESSED CONCRETE
CORED SLAB UNIT
(SUB-REGIONAL TIER)

CDM Smith
CDM SMITH
5400 Glenwood Avenue, Suite 400
Raleigh, NC 27612-3228
NC COA No. F-1255

DOCUMENT NOT CONSIDERED FINAL UNLESS ALL SIGNATURES COMPLETED

DRAWN BY : A.L. STROUD DATE : 04/17
CHECKED BY : J.B. TAYLOR DATE : 04/17
DESIGN ENGINEER : A.L. STROUD DATE : 04/17

DWG. No.

NORTH CAROLINA PROFESSIONAL SEAL 33698 ENGINEER JOSHUA B. TAYLOR
5/19/2017
DocuSigned by: Joshua B. Taylor

REVISIONS							SHEET NO.
NO.	BY:	DATE:	NO.	BY:	DATE:		S-22
1			3				TOTAL SHEETS
2			4				22

DRAWN BY : SHS/MAA 5-09
CHECKED BY : BCH 5-09
REV. 9-15 MAA/TMG

FILE: c:\pw_pll\stroudal\d0349182\401_043_B5709_SMU_AS_022_080154.dgn
DATE: 5/19/2017 1:12:52 PM

invoke expression
$$$$$$$$$$$$$$$$$$$$$$$$DGN$$$$$$$$$$$$$$$$$$$$$$$$
USER: STROUDAL

STANDARD NOTES

DESIGN DATA:

SPECIFICATIONS	A.A.S.H.T.O. (CURRENT)
LIVE LOAD	SEE PLANS
IMPACT ALLOWANCE	SEE A.A.S.H.T.O.
STRESS IN EXTREME FIBER OF	
STRUCTURAL STEEL - AASHTO M270 GRADE 36	20,000 LBS. PER SQ. IN.
- AASHTO M270 GRADE 50W	27,000 LBS. PER SQ. IN.
- AASHTO M270 GRADE 50	27,000 LBS. PER SQ. IN.
REINFORCING STEEL IN TENSION	
GRADE 60	24,000 LBS. PER SQ. IN.
CONCRETE IN COMPRESSION	1,200 LBS. PER SQ. IN.
CONCRETE IN SHEAR	SEE A.A.S.H.T.O.
STRUCTURAL TIMBER - TREATED OR	
UNTREATED - EXTREME FIBER STRESS	1,800 LBS. PER SQ. IN.
COMPRESSION PERPENDICULAR TO GRAIN OF TIMBER	375 LBS. PER SQ. IN.
EQUIVALENT FLUID PRESSURE OF EARTH	30 LBS. PER CU. FT. (MINIMUM)

MATERIAL AND WORKMANSHIP:

EXCEPT AS MAY OTHERWISE BE SPECIFIED ON PLANS OR IN THE SPECIAL PROVISIONS, ALL MATERIAL AND WORKMANSHIP SHALL BE IN ACCORDANCE WITH THE 2012 "STANDARD SPECIFICATIONS FOR ROADS AND STRUCTURES" OF THE N. C. DEPARTMENT OF TRANSPORTATION.

STEEL SHEET PILING FOR PERMANENT OR TEMPORARY APPLICATIONS SHALL BE HOT ROLLED.

CONCRETE:

UNLESS OTHERWISE REQUIRED ON PLANS, CLASS A CONCRETE SHALL BE USED FOR ALL PORTIONS OF ALL STRUCTURES WITH THE EXCEPTION THAT: CLASS AA CONCRETE SHALL BE USED IN BRIDGE SUPERSTRUCTURES, ABUTMENT BACKWALLS, AND APPROACH SLABS; AND CLASS B CONCRETE SHALL BE USED FOR SLOPE PROTECTION AND RIP RAP.

CONCRETE CHAMFERS:

UNLESS OTHERWISE NOTED ON THE PLANS, ALL EXPOSED CORNERS ON STRUCTURES SHALL BE CHAMFERED 3/4" WITH THE FOLLOWING EXCEPTIONS: TOP CORNERS OF CURBS MAY BE ROUNDED TO 1-1/2" RADIUS WHICH IS BUILT INTO CURB FORMS; CORNERS OF TRANSVERSE FLOOR EXPANSION JOINTS SHALL BE ROUNDED WITH A 1/4" FINISHING TOOL UNLESS OTHERWISE REQUIRED ON PLANS; AND CORNERS OF EXPANSION JOINTS IN THE ROADWAY FACES AND TOPS OF CURBS AND SIDEWALKS SHALL BE ROUNDED TO A 1/4" RADIUS WITH A FINISHING STONE OR TOOL UNLESS OTHERWISE REQUIRED ON PLANS.

DOWELS:

DOWELS WHEN INDICATED ON PLANS AS FOR CULVERT EXTENSIONS, SHALL BE EMBEDDED AT LEAST 12" INTO THE OLD CONCRETE AND GROUTED INTO PLACE WITH 1:2 CEMENT MORTAR.

ALLOWANCE FOR DEAD LOAD DEFLECTION, SETTLEMENT, ETC. IN CASTING SUPERSTRUCTURES:

BRIDGES SHALL BE BUILT ON THE GRADE OR VERTICAL CURVE SHOWN ON PLANS. SLABS, CURBS AND PARAPETS SHALL CONFORM TO THE GRADE OR CURVE.

ALL DIMENSIONS WHICH ARE GIVEN IN SECTION AND ARE AFFECTED BY DEAD LOAD DEFLECTIONS ARE DIMENSIONS AT CENTER LINE OF BEARING UNLESS OTHERWISE NOTED ON PLANS. IN SETTING FORMS FOR STEEL BEAM BRIDGES AND PRESTRESSED CONCRETE GIRDER BRIDGES, ADJUSTMENTS SHALL BE MADE DUE TO THE DEAD LOAD DEFLECTIONS FOR THE ELEVATIONS SHOWN. WHERE BLOCKS ARE SHOWN OVER BEAMS FOR BUILDING UP TO THE SLAB, THE VERTICAL DIMENSIONS OF THE BLOCKS SHALL BE ADJUSTED BETWEEN BEARINGS TO COMPENSATE FOR DEAD LOAD DEFLECTIONS, VERTICAL CURVE ORDINATE, AND ACTUAL BEAM CAMBER. WHERE BOTTOM OF SLAB IS IN LINE WITH BOTTOM OF TOP FLANGES, DEPTH OF SLAB BETWEEN BEARINGS SHALL BE ADJUSTED TO COMPENSATE FOR DEAD LOAD DEFLECTION, VERTICAL CURVE ORDINATE, AND ACTUAL BEAM CAMBER.

IN SETTING FALSEWORK AND FORMS FOR REINFORCED CONCRETE SPANS, AN ALLOWANCE SHALL BE MADE FOR DEAD LOAD DEFLECTIONS, SETTLEMENT OF FALSEWORK, AND PERMANENT CAMBER WHICH SHALL BE PROVIDED FOR IN ADDITION TO THE ELEVATIONS SHOWN. AFTER REMOVAL OF THE FALSEWORK, THE FINISHED STRUCTURES SHALL CONFORM TO THE PROFILE AND ELEVATIONS SHOWN ON THE PLANS AND CONSTRUCTION ELEVATIONS FURNISHED BY THE ENGINEER.

DETAILED DRAWINGS FOR FALSEWORK OR FORMS FOR BRIDGE SUPERSTRUCTURE AND ANY STRUCTURE OR PARTS OF A STRUCTURE AS NOTED ON THE PLANS SHALL BE SUBMITTED TO THE ENGINEER FOR APPROVAL BEFORE CONSTRUCTION OF THE FALSEWORK OR FORMS IS STARTED.

REINFORCING STEEL:

ALL REINFORCING STEEL SHALL BE DEFORMED. DIMENSIONS RELATIVE TO PLACEMENT OF REINFORCING ARE TO CENTERS OF BARS UNLESS OTHERWISE INDICATED IN THE PLANS. DIMENSIONS ON BAR DETAILS ARE TO CENTERS OF BARS OR ARE OUT TO OUT AS INDICATED ON PLANS.

WIRE BAR SUPPORTS SHALL BE PROVIDED FOR REINFORCING STEEL WHERE INDICATED ON THE PLANS. WHEN BAR SUPPORT PIECES ARE PLACED IN CONTINUOUS LINES, THEY SHALL BE SO PLACED THAT THE ENDS OF THE SUPPORTING WIRES SHALL BE LAPPED TO LOCK LEGS ON ADJOINING PIECES.

STRUCTURAL STEEL:

AT THE CONTRACTOR'S OPTION, HE MAY SUBSTITUTE 7/8" Ø SHEAR STUDS FOR THE 3/4" Ø STUDS SPECIFIED ON THE PLANS. THIS SUBSTITUTION SHALL BE MADE AT THE RATE OF 3 - 7/8" Ø STUDS FOR 4 - 3/4" Ø STUDS, AND STUD SPACING CHANGES SHALL BE MADE AS NECESSARY TO PROVIDE THE SAME EQUIVALENT NUMBER OF 7/8" Ø STUDS ALONG THE BEAM AS SHOWN FOR 3/4" Ø STUDS BASED ON THE RATIO OF 3 - 7/8" Ø STUDS FOR 4 - 3/4" Ø STUDS. STUDS OF THE LENGTH SPECIFIED ON THE PLANS MUST BE PROVIDED. THE MAXIMUM SPACING SHALL BE 2'-0".

EXCEPT AT THE INTERIOR SUPPORTS OF CONTINUOUS BEAMS WHERE THE COVER PLATE IS IN CONTACT WITH BEARING PLATE, THE CONTRACTOR MAY, AT HIS OPTION, SUBSTITUTE FOR THE COVER PLATES DESIGNATED ON THE PLANS COVER PLATES OF THE EQUIVALENT AREA PROVIDED THESE PLATES ARE AT LEAST 5/16" IN THICKNESS AND DO NOT EXCEED A WIDTH EQUAL TO THE FLANGE WIDTH LESS 2" OR A THICKNESS EQUAL TO 2 TIMES THE FLANGE THICKNESS. THE SIZE OF FILLET WELDS SHALL CONFORM TO THE REQUIREMENTS OF THE CURRENT ANSI/AASHTO/AWS "BRIDGE WELDING CODE". ELECTROSLAG WELDING WILL NOT BE PERMITTED.

WITH THE SOLE EXCEPTION OF EDGES AT SURFACES WHICH BEAR ON OTHER SURFACES, ALL SHARP EDGES AND ENDS OF SHAPES AND PLATES SHALL BE SLIGHTLY ROUNDED BY SUITABLE MEANS TO A RADIUS OF APPROXIMATELY 1/16 INCH OR EQUIVALENT FLAT SURFACE AT A SUITABLE ANGLE PRIOR TO PAINTING, GALVANIZING, OR METALLIZING.

HANDRAILS AND POSTS:

METAL STANDARDS AND FACES OF THE CONCRETE END POSTS FOR THE METAL RAIL SHALL BE SET NORMAL TO THE GRADE OF THE CURB, UNLESS OTHERWISE SHOWN ON PLANS. THE METAL RAIL AND TOPS OF CONCRETE POSTS USED WITH THE ALUMINUM RAIL SHALL BE BUILT PARALLEL TO THE GRADE OF THE CURB.

METAL HANDRAILS SHALL BE IN ACCORDANCE WITH THE PLANS. RAILS SHALL BE AS MANUFACTURED FOR BRIDGE RAILING. CASTINGS SHALL BE OF A UNIFORM APPEARANCE. FINS AND OTHER DEFORMATIONS RESULTING FROM CASTING OR OTHERWISE SHALL BE REMOVED IN A MANNER SO THAT A UNIFORM COLORING OF THE COMPLETED CASTING SHALL BE OBTAINED. CASTINGS WITH DISCOLORATIONS OR OF NON-UNIFORM COLORING WILL NOT BE ACCEPTED. CERTIFIED MILL REPORTS ARE REQUIRED FOR METAL RAILS AND POSTS.

SPECIAL NOTES:

GENERALLY, IN CASE OF DISCREPANCY, THIS STANDARD SHEET OF NOTES SHALL GOVERN OVER THE SPECIFICATIONS, BUT THE REMAINDER OF THE PLANS SHALL GOVERN OVER NOTES HEREON, AND SPECIAL PROVISIONS SHALL GOVERN OVER ALL. SEE SPECIFICATIONS ARTICLE 105-4.

ENGLISH

JANUARY, 1990